Fire Apparatus Quotation for:
STATE OF OHIO TERM SCHEDULE

Quotation Number: 57471 Rev: 5

Unit Description: TDES-COMM

Quote Description: Tradition ES Pumper Commercial Freightliner 2-Door

Salescode	Extended Description	Qty
Tradition ES Base Model		
0501-0005	An apparatus being compliant to NFPA and ULC (as applicable) to be provided. The apparatus to include an officer side assembly with adjustable ladder storage.	1
TESTING COMPLIANCE STANDARD		
1001-0027	The OEM supplied components of the vehicle to meet the requirements of NFPA 1901, 2009 edition. All dimensions and components are subject to minor variations.	1
CHASSIS MODEL		
1005-0240	Chassis Prep M2 Cummins engine. Includes exhaust extension, rear tow eyes, high idle, master light switch, master battery switch, air inlet and battery charger receptacle.	1
1005-0487	M2 (2) door, 181" WB & 47" frame cut, front tow hooks, 12K & 23K axles, ABS brakes, radiator cooling sized for current emissions requirements, 50 gallon fuel tank, EVS3000 transmission, (2) 1850CCA batteries, 270 alternator, ember separator and AC.	1
BUMPERS		
1160-0078	Freightliner three (3) piece front bumper. Bumper to be chrome and includes driver side mounting area for NFPA speaker.	1
WHEEL OPTIONS		
1050-0058	Chassis rims painted job color.	1
TIRE OPTIONS		
1060-0066	Tire pressure monitoring valve stem caps. For use with a chassis with 12K front and 23K rear axle.	1
ENGINES & TRANSMISSIONS		
1200-0177	Electronically limited speed to 68 MPH.	1
1200-0248	Freightliner Cummins ISL 330 HP 2013 EPA engine.	1
1200-0251	Exhaust brake for use with Freightliner chassis.	1

CHASSIS OPTIONS		
1680-0165	Diamond plate trim package for a (2) door Freightliner.	1
1680-0167	Two (2) hood-mounted OEM air horns with driver and officer mounted foot switches.	1
1680-0168	The commercial chassis to have seat belt and chassis pre-wiring for NFPA seating indicator and vehicle data recorder.	1
MIRRORS		
1670-0043	Freightliner West Coast heated cab mirrors with remote control. Includes bright finish.	1
SEATS		
1510-0179	Seating Package Two (2) Door Freightliner. Includes One (1) Seats Inc 911 Universal Hi-Back Air Ride Driver and a Two (2) Person Bench Seat.	1
1510-0183	One (1) three person seating capacity tag- driver side area and two (2) seat belt warning tags- one (1) each cab door. For use with Freightliner chassis.	1
MISC INTERIOR CAB OPTIONS		
1685-0178	Cab gauge cluster with english dominant.	1
CAB ELECTRICAL OPTIONS		
1750-0244	Interior and exterior NFPA cab lighting package for (2) dr chassis. Consists of (2) incandescent interior and (2) incandescent under cab lights.	1
BODY MODEL		
3080-0139	Main Body (23MF). Includes: Driver side full height enhanced extended 34" front / 54" side assembly, Mainframe and headboard for 85" high body, Hosebed area, enhanced extended rear with full height B1 compartment with roll-up door with header, tailboard, rear NFPA dual lighted LED steps and handrails.	1
BODY COMPT RIGHT SIDE		
3120-0372	Officer side 1/2 height body with 34" forward / 54" rearward compartment and adjustable ladder brackets.	1
DOORS		
3300-0152	Officer 1/2 side body satin finish roll-up door package. Includes header plate(s) and dust brush(es).	1
DOORS		
3300-0155	Driver full height side body satin finish roll-up door package. Includes header plate(s) and dust brush(es).	1
SHELVES		
3370-0108	Fixed shelf at compartment offset. Location: Driver side forward and rearward body compartments.	1
COVERS		
3305-0103	Red vinyl hose bed cover with fill tower access flap. Includes fixed forward	1

	attachment with velcro sides with mechanical ends and end flap with manually released attachments.	
3305-0112	Vinyl crosslay cover. Includes mechanical hold-downs on top outer corners and quick release side flap hold downs. Cover color: Red	1
PUMP MODULE		
3130-0343	Main lower pump module. For use with a 23" mainframe.	1
3130-0345	Upper side mount module with area for double stacked crosslays w/divider (crosslays offset rearward). Includes deck gun channel and forward module area storage.	1
3130-0352	Runningboards for main pump module.	1
PUMP PANELS		
3134-0076	Pump panels for use with side mount pump module. Includes driver side fixed main and bleeder panel and swing down upper gauge panel with latching and hold-open cables. Officer side with fixed lower(s) and a swing down removable upper with latchings.	1
WATER TANK		
4010-0162	Tank with 1000 water (23MF). UPF Poly III blue fill tower. Includes rear tank dump mounting plate.	1
WATER TANK OPTIONS		
4020-0036	Tank Plug installed in rear tank inlet hole.	1
TANK PLUMBING		
4450-0150	Manual 3" tank-to-pump for use with QFLO pump on side mount pump module.	1
HANDRAILS / STEPS		
3330-0111	Four (4) dual lighted LED folding steps- one (1) officer and three (3) driver side front compartment face. Includes two (2) handrails - one (1) officer side and one (1) driver side of pump module.	1
MISC BODY OPTIONS		
3340-0418	Body compartment floors to be diamond plate.	1
3340-0419	Body compartments to be smooth plate (natural finish).	1
3340-0421	Diamond plate single axle wheel well. Includes bolt-on composite wheel well liners and mudflaps.	1
3340-0422	Double hardsuction storage with NFPA compliant restraints. Locate over adjustable ladder brackets.	1
3340-0425	Storage brackets for(1) attic ladder and (2) pike poles. Officer side compartment top.	1
3340-0428	Long hosebed divider.	1
3340-0429	Main (structural) body rubrail package. Includes white scotchlite inserts.	1
SCBA BOTTLE STORAGE		

3320-0049	Four (4) SCBA bottle storage. Located (2) each side in body wheel well area.	1
PUMPS		
4005-0108	Pump gear box to be 23X. For use with 1250 gpm QFLO pump.	1
PLUMBING KITS		
4410-0030	Plumbing Kit for use with a Hale Pump and Side Mount Pump Module. To include the Master Intake and Discharge Gauges, Pressure Governor, (6) 2.5" Pressure Gauges,, (1) 2" Tank Fill, (1) 2.5" Driver Side Auxiliary Intake, (2) 2.5" Driver Side Discharges, (1) 2.5" Driver Side Rear Discharge (droop shipped loose), (2) 1.5" Preconnect Discharges, (1) 3" Deck Gun and (2) 6" Intake Caps (Shipped Loose).	1
PUMP OPTIONS		
4015-0123	Manifold for use with a side mount or top mount pump modules.	1
DISCHARGES AND PRECONNECTS		
4415-0795	2.5" officer side discharge (forward of steamer) with NFPA droop with cap. For use with Side Mount Pump Module. Includes 2.5" pressure gauge, and bleeder on panel.	1
GAUGES		
4435-0167	Pump module main and discharge gauges to be english dominant.	1
4435-0171	Water Tank Level Gauge. Locate on the pump operator panel.	1
ELECTRICAL SYSTEMS		
5010-0026	Vehicle data recorder - 2009 NFPA compliant. Includes occupant detection with display. Display location on cab dash above transmission shift panel.	1
LIGHT BARS		
5300-0240	Whelen Justice model JE2NFPA 56" with MKEZ7 mounts. All LED (forward facing) light bar.	1
WARNING LIGHT PACKAGES		
5550-0143	Whelen Super LED lower level cab warning light package. Includes (4) LIN3 LED.	1
5550-0144	Whelen Super LED lower level body warning light package. Includes (6) LIN3 light heads located (1) each side below the forward body compartment (offset rearward), (1) each side below the rearward body compartments (offset rearward) and (1) each side on rear of body down low below the taillights (offset outboard).	1
WARNING LIGHTS		
5600-0233	Whelen beacon Model RB6 (PR)- red driver/amber officer. Location: upper rear body.	1
DOT LIGHTING		
5150-0095	Body and cab electrical system.	1
5150-0096	Body and pump module incandescent DOT marker light package. Includes separate midship side marker and turn lighting.	1
5150-0097	Taillights Federal Signal DOT STT/BU. Includes 4" LED red stop/tail/turn and 4" LED	1

	clear back-up lights.	
LIGHTS - COMPARTMENT, STEP & GROUND		
5380-0157	Incandescent compartment light package. For use with driver full height, officer half side and full height rear.	1
5380-0160	Incandescent underbody ground lighting.	1
LIGHTS - NON-WARNING		
5400-0113	(3) deck light package. Locate Deck Lights - (2) at rear of body and (1) at front of hosebed.	1
5400-0117	Side mount pump module lighting package. Includes (2) LED pump panel lights - (1) driver side and (1) officer side and (1) incandescent pump compartment light.	1
MISC ELECTRICAL		
5110-0074	NFPA cab siren and speaker package. Includes (1) PA300 siren with (1) ES100 speaker in driver side bumper.	1
MISC LOOSE EQUIPMENT		
7900-0164	The NFPA required defibrillator to be dealer or customer supplied.	1
7900-0165	DOT driveaway kit. Includes three (3) triangular reflectors with case.	1
LOOSE EQUIPMENT PKGS		
7950-0019	Ladder & Equipment Package. Includes: Alco-Lite PEL24, PRL14, FL10 w/feet, (1) 8' and (1) 10' pike pole, (2) 6"x10' hard suction hoses, (2) axes w/mntng brkts (ship loose) and (1) 6" strainer (ship loose).	1
EXTERIOR PAINT		
8100-0245	Paint cab DuPont L6572EG Red.	1
8100-0308	Paint body FLNA 3225 Red.	1
STRIPING		
8300-0002-859-12	NFPA Scotchlite Stripe - 4" wide and straight on front/sides of cab and sides/rear of body. Color: White. Location: bottom of stripe flush with bottom of cab and straight back.	1
GRAPHICS		
8400-0019	Chevron "A" style 6" printed sheet Scotchlite striping on rear of body (outboard rearward facing smooth plate panels of the rear compartment door and the rear driver and officer compartment face). Colors to be red and yellow.	1
WARRANTY / STANDARD & EXTENDED		
9100-0039	1 year full warranty.	1
9100-0041	10 Year/100,000 mile structural warranty.	1
9100-0042	Lifetime polypropylene warranty.	1
9100-0043	10 Year stainless steel plumbing warranty.	1
9100-0045	10 Year Limited paint, corrosion perforation warranty - for Sikkens paint.	1

SUPPORT, DELIVERY, INSPECTIONS AND MANUALS			
9300-0302	Manuals Operation / Service CD.	1	
PRICE	2013 E-ONE TRADITION ES PUMPER - FREIGHTLINER 2DR CHASSIS		$179,362.

TRADITION ES

TDES-COMM

FREIGHTLINER M2 2 DOOR CHASSIS

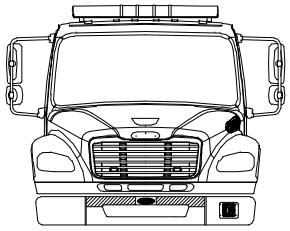

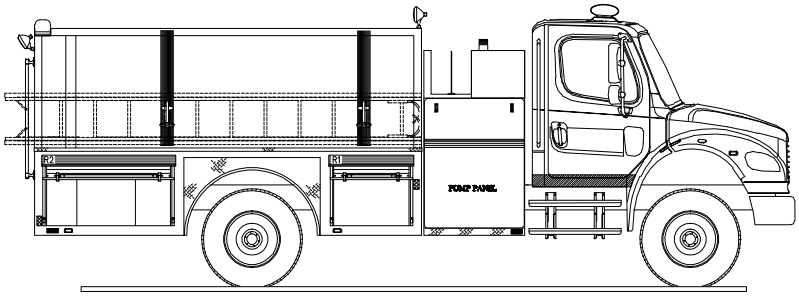

TRADITION ES

TDES-COMM

FREIGHTLINER M2 2 DOOR CHASSIS

HALE PUMP 1000 GALLON TANK			HOSELOAD: NFPA COMPLIANT		
COMPT.	**OPENING**		**INTERIOR DIMENSION**		
L1	32W	58H	34W 34W	30H 28H	12D UPPER 24D LOWER
R1	32W	20H	34W	28H	24D
L2	54W	26H	56W	26H	12D
R2	52W	20H	54W	28H	23D
L3	52W	58H	54W 54W	30H 28H	12D UPPER 23D LOWER
B1	36W	49H	40W 40W	11H 38H	21D UPPER 24D LOWER

THIS DRAWING IS FOR REFERENCE PURPOSES. ALL DIMENSIONS ARE SUBJECT TO MINOR VARIATIONS. SOME FEATURES SHOWN ARE NOT STANDARD.

This print is the property of Emergency One, Inc. and is loaned to you subject to return on demand, unless otherwise agreed to in writing by Emergency One, Inc. Its contents are confidential and must not be copied or submitted to third parties for use or examination.

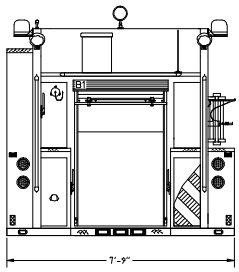

HOSEBED HEIGHT:
(FOR REFERENCE ONLY)
TO TAILBOARD: 54"
TO GROUND: 85"

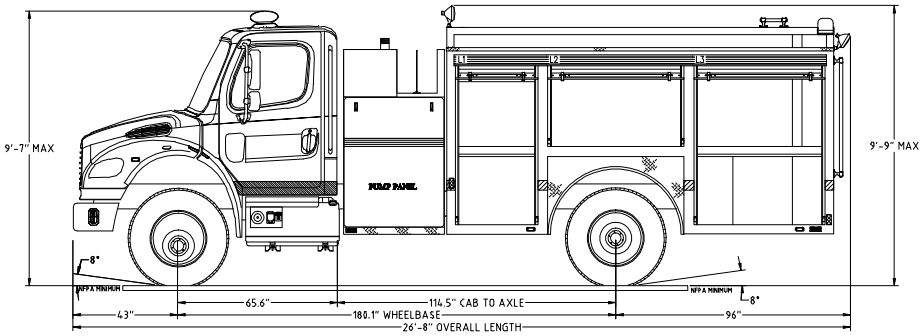

Fire Apparatus Quotation for:
STATE OF OHIO TERM SCHEDULE

Quotation Number: 57472 Rev: 4

Unit Description: TDES-COMM

Quote Description: Tradition ES Pumper Commercial - International 2-door

Salescode	Extended Description	Qty
Tradition ES Base Model		
0501-0005	An apparatus being compliant to NFPA and ULC (as applicable) to be provided. The apparatus to include an officer side assembly with adjustable ladder storage.	1
TESTING COMPLIANCE STANDARD		
1001-0027	The OEM supplied components of the vehicle to meet the requirements of NFPA 1901, 2009 edition. All dimensions and components are subject to minor variations.	1
CHASSIS MODEL		
1005-0260	Chassis Prep International 4400 Maxx Force engine. Includes exhaust extension, rear tow eyes, high idle, master light switch, master battery switch, air inlet and battery charger receptacle.	1
1005-0529	International 4400 (2) door, 181" WB & 47" frame cut, front tow hooks, 12K & 23K axles, ABS brakes, radiator cooling sized for current emissions requirements, 50 gal. right hand fuel tank, EVS3000 transmission, (3) 1950CCA batteries, 320 alternator, ember separator and AC.	1
BUMPERS		
1160-0079	International single piece chrome front bumper.	1
1160-0081	International West Coast Mirrors. Includes heat, remote control and clearance light on mirror.	1
WHEEL OPTIONS		
1050-0058	Chassis rims painted job color.	1
TIRE OPTIONS		
1060-0066	Tire pressure monitoring valve stem caps. For use with a chassis with 12K front and 23K rear axle.	1
ENGINES & TRANSMISSIONS		
1200-0177	Electronically limited speed to 68 MPH.	1
1200-0262	International Maxx Force 330 HP 2010 EPA engine.	1
1200-0263	Exhaust Brake for use with International chassis.	1

CHASSIS OPTIONS		
1680-0168	The commercial chassis to have seat belt and chassis pre-wiring for NFPA seating indicator and vehicle data recorder.	1
1680-0171	Diamond plate trim package for a (2) door International. Includes a full length driver side and an officer side trim that will utilze pieces already supplied by the OEM.	1
1680-0172	Two (2) hood-mounted OEM air horns with driver and officer mounted foot switches.	1
SEATS		
1510-0177	Seating Package Two (2) Door International. Includes One (1) Nat'l Brand Air Ride Driver and Two (2) Person Bench Seat.	1
1510-0181	One (1) three person seating capacity tag- driver side area and two (2) seat belt warning tags- one (1) each cab door. For use with International chassis.	1
MISC INTERIOR CAB OPTIONS		
1685-0178	Cab gauge cluster with english dominant.	1
CAB ELECTRICAL OPTIONS		
1750-0246	Interior and exterior NFPA cab lighting package for (2) dr chassis. Consists of (2) incandescent interior and (2) incandescent under cab lights.	1
BODY MODEL		
3080-0139	Main Body (23MF). Includes: Driver side full height enhanced extended 34" front / 54" side assembly, Mainframe and headboard for 85" high body, Hosebed area, enhanced extended rear with full height B1 compartment with roll-up door with header, tailboard, rear NFPA dual lighted LED steps and handrails.	1
BODY COMPT RIGHT SIDE		
3120-0372	Officer side 1/2 height body with 34" forward / 54" rearward compartment and adjustable ladder brackets.	1
DOORS		
3300-0152	Officer 1/2 side body satin finish roll-up door package. Includes header plate(s) and dust brush(es).	1
3300-0155	Driver full height side body satin finish roll-up door package. Includes header	1
DOORS		
	plate(s) and dust brush(es).	
SHELVES		
3370-0108	Fixed shelf at compartment offset. Location: Driver side forward and rearward body compartments.	1
COVERS		
3305-0103	Red vinyl hose bed cover with fill tower access flap. Includes fixed forward attachment with velcro sides with mechanical ends and end flap with manually released attachments.	1

3305-0112	Vinyl crosslay cover. Includes mechanical hold-downs on top outer corners and quick release side flap hold downs. Cover color: Red	1
PUMP MODULE		
3130-0343	Main lower pump module. For use with a 23" mainframe.	1
3130-0345	Upper side mount module with area for double stacked crosslays w/divider (crosslays offset rearward). Includes deck gun channel and forward module area storage.	1
3130-0352	Runningboards for main pump module.	1
PUMP PANELS		
3134-0076	Pump panels for use with side mount pump module. Includes driver side fixed main and bleeder panel and swing down upper gauge panel with latching and hold-open cables. Officer side with fixed lower(s) and a swing down removable upper with latchings.	1
WATER TANK		
4010-0162	Tank with 1000 water (23MF). UPF Poly III blue fill tower. Includes rear tank dump mounting plate.	1
WATER TANK OPTIONS		
4020-0036	Tank Plug installed in rear tank inlet hole.	1
TANK PLUMBING		
4450-0150	Manual 3" tank-to-pump for use with QFLO pump on side mount pump module.	1
HANDRAILS / STEPS		
3330-0111	Four (4) dual lighted LED folding steps- one (1) officer and three (3) driver side front compartment face. Includes two (2) handrails - one (1) officer side and one (1) driver side of pump module.	1
MISC BODY OPTIONS		
3340-0418	Body compartment floors to be diamond plate.	1
3340-0419	Body compartments to be smooth plate (natural finish).	1
3340-0421	Diamond plate single axle wheel well. Includes bolt-on composite wheel well liners and mudflaps.	1
3340-0422	Double hardsuction storage with NFPA compliant restraints. Locate over adjustable ladder brackets.	1
3340-0425	Storage brackets for(1) attic ladder and (2) pike poles. Officer side compartment top.	1
3340-0428	Long hosebed divider.	1
3340-0429	Main (structural) body rubrail package. Includes white scotchlite inserts.	1
SCBA BOTTLE STORAGE		
3320-0049	Four (4) SCBA bottle storage. Located (2) each side in body wheel well area.	1
PUMPS		

4005-0106	Pump gear box to be 23L. For use with 1250 gpm QFLO pump.	1
PLUMBING KITS		
4410-0030	Plumbing Kit for use with a Hale Pump and Side Mount Pump Module. To include the Master Intake and Discharge Gauges, Pressure Governor, (6) 2.5" Pressure Gauges,, (1) 2" Tank Fill, (1) 2.5" Driver Side Auxiliary Intake, (2) 2.5" Driver Side Discharges, (1) 2.5" Driver Side Rear Discharge (droop shipped loose), (2) 1.5" Preconnect Discharges, (1) 3" Deck Gun and (2) 6" Intake Caps (Shipped Loose).	1
PUMP OPTIONS		
4015-0123	Manifold for use with a side mount or top mount pump modules.	1
DISCHARGES AND PRECONNECTS		
4415-0795	2.5" officer side discharge (forward of steamer) with NFPA droop with cap. For use with Side Mount Pump Module. Includes 2.5" pressure gauge, and bleeder on panel.	1
GAUGES		
4435-0167	Pump module main and discharge gauges to be english dominant.	1
4435-0171	Water Tank Level Gauge. Locate on the pump operator panel.	1
ELECTRICAL SYSTEMS		
5010-0034	Vehicle data recorder - 2009 NFPA compliant. Includes occupant detection with display. Display location on cab dash above transmission shifter.	1
LIGHT BARS		
5300-0240	Whelen Justice model JE2NFPA 56" with MKEZ7 mounts. All LED (forward facing) light bar.	1
WARNING LIGHT PACKAGES		
5550-0143	Whelen Super LED lower level cab warning light package. Includes (4) LIN3 LED.	1
5550-0144	Whelen Super LED lower level body warning light package. Includes (6) LIN3 light heads located (1) each side below the forward body compartment (offset rearward), (1) each side below the rearward body compartments (offset rearward) and (1) each side on rear of body down low below the taillights (offset outboard).	1
WARNING LIGHTS		
5600-0233	Whelen beacon Model RB6 (PR)- red driver/amber officer. Location: upper rear body.	1
DOT LIGHTING		
5150-0095	Body and cab electrical system.	1
5150-0096	Body and pump module incandescent DOT marker light package. Includes separate midship side marker and turn lighting.	1
5150-0097	Taillights Federal Signal DOT STT/BU. Includes 4" LED red stop/tail/turn and 4" LED clear back-up lights.	1
LIGHTS - COMPARTMENT, STEP & GROUND		

5380-0157	Incandescent compartment light package. For use with driver full height, officer half side and full height rear.	1
5380-0160	Incandescent underbody ground lighting.	1
LIGHTS - NON-WARNING		
5400-0113	(3) deck light package. Locate Deck Lights - (2) at rear of body and (1) at front of hosebed.	1
5400-0117	Side mount pump module lighting package. Includes (2) LED pump panel lights - (1) driver side and (1) officer side and (1) incandescent pump compartment light.	1
MISC ELECTRICAL		
5110-0076	NFPA cab siren and speaker package. Includes (1) PA300 siren with (1) ES100 speaker officer side behind bumper cut-out (includes mounting bracket).	1
MISC LOOSE EQUIPMENT		
7900-0165	DOT driveaway kit. Includes three (3) triangular reflectors with case.	1
LOOSE EQUIPMENT PKGS		
7950-0019	Ladder & Equipment Package. Includes: Alco-Lite PEL24, PRL14, FL10 w/feet, (1) 8' and (1) 10' pike pole, (2) 6"x10' hard suction hoses, (2) axes w/mntng brkts (ship loose) and (1) 6" strainer (ship loose).	1
EXTERIOR PAINT		
8100-0237	Cab paint FLNA 3225 Red. International NAV2893.	1
8100-0308	Paint body FLNA 3225 Red.	1
STRIPING		
8300-0002-859-12	NFPA Scotchlite Stripe - 4" wide and straight on front/sides of cab and sides/rear of body. Color: White. Location: bottom of stripe flush with bottom of cab and straight back.	1
GRAPHICS		
8400-0019	Chevron "A" style 6" printed sheet Scotchlite striping on rear of body (outboard rearward facing smooth plate panels of the rear compartment door and the rear driver and officer compartment face). Colors to be red and yellow.	1
WARRANTY / STANDARD & EXTENDED		
9100-0039	1 year full warranty.	1
9100-0041	10 Year/100,000 mile structural warranty.	1
9100-0042	Lifetime polypropylene warranty.	1
9100-0043	10 Year stainless steel plumbing warranty.	1
9100-0045	10 Year Limited paint, corrosion perforation warranty - for Sikkens paint.	1
SUPPORT, DELIVERY, INSPECTIONS AND MANUALS		
9300-0302	Manuals Operation / Service CD.	1
PRICE	E-ONE 2013 TRADITION ES PUMPER - INTERNATIONAL 2-DOOR CHASSIS	$180,646.

TRADITION ES

TDES-COMM

INTERNATIONAL 4400 2 DOOR CHASSIS

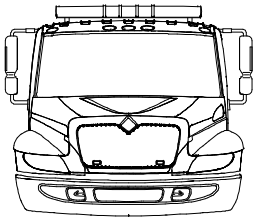

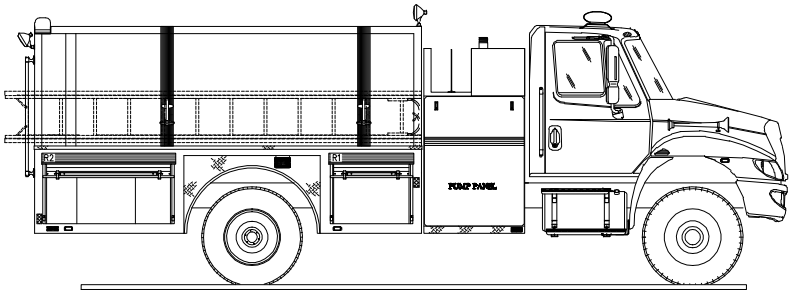

TRADITION ES

TDES-COMM

INTERNATIONAL 4400 2 DOOR CHASSIS

HALE PUMP 1000 GALLON TANK			HOSELOAD: NFPA COMPLIANT		
COMPT.	**OPENING**		**INTERIOR DIMENSION**		
L1	32W	58H	34W 34W	30H 28H	12D UPPER 24D LOWER
R1	32W	20H	34W	28H	24D
L2	54W	26H	56W	26H	12D
R2	52W	20H	54W	28H	23D
L3	52W	58H	54W 54W	30H 28H	12D UPPER 23D LOWER
B1	36W	49H	40W 40W	11H 38H	21D UPPER 24D LOWER

THIS DRAWING IS FOR REFERENCE PURPOSES. ALL DIMENSIONS ARE SUBJECT TO MINOR VARIATIONS. SOME FEATURES SHOWN ARE NOT STANDARD.

This print is the property of Emergency One, Inc. and is loaned to you subject to return on demand, unless otherwise agreed to in writing by Emergency One, Inc. Its contents are confidential and must not be copied or submitted to third parties for use or examination.

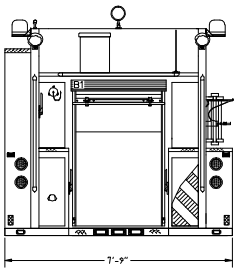

HOSEBED HEIGHT:
(FOR REFERENCE ONLY)
TO TAILBOARD: 54"
TO GROUND: 85"

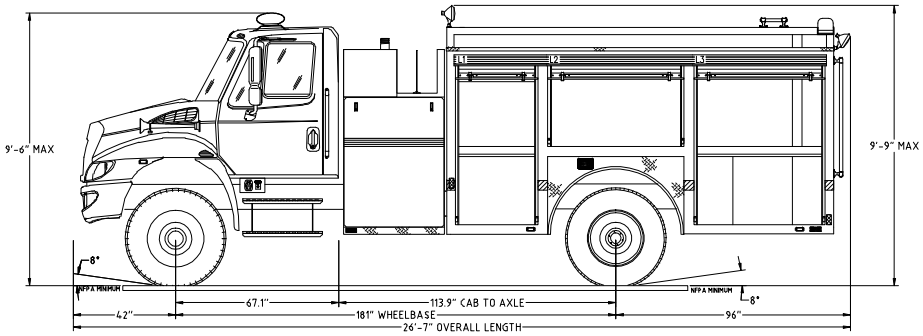

E-ONE OHIO STATE TERM SCHEDULE 2013 OPTIONS PRICE BOOK

TRADITION ES PUMPERS - COMMERCIAL CHASSIS

1000	Chassis	
0501-0001	An apparatus being compliant to NFPA or ULC (as applicable) to be provided. The apparatus to include and officer side assembly with a Zico drop down electric ladder rack.	$161,308
0501-0002	An apparatus being compliant to NFPA and ULC (as applicable) to be provided. The apparatus to include an officer side assembly with a Zico drop down electric ladder rack.	$163,352
0501-0003	An apparatus being compliant to NFPA and ULC (as applicable) to be provided. The apparatus to include an officer side assembly with a Zico overhead hydraulic/electric ladder rack.	$174,802
0501-0004	An apparatus being compliant to NFPA and ULC (as applicable) to be provided. The apparatus to include an officer side storage tunnel with rear access.	$179,520
0501-0005	An apparatus being compliant to NFPA and ULC (as applicable) to be provided. The apparatus to include an officer side assembly with adjustable ladder storage.	$154,404
0501-0006	An apparatus being compliant to NFPA or ULC (as applicable) to be provided. The apparatus to include and officer side assembly with adjustable ladder storage.	$152,735
0501-0007	An apparatus being compliant to NFPA and ULC (as applicable) to be provided. The apparatus to include an officer side assembly with adjustable ladder storage.	$154,779
0501-0008	An apparatus being compliant to NFPA and ULC (as applicable) to be provided. The apparatus to include a driver and officer side storage tunnel with rear access.	$179,520
0501-0009	An apparatus being compliant to NFPA and ULC (as applicable) to be provided. The apparatus to include an officer side assembly with a Zico drop down electric ladder rack.	$162,976
0501-0010	An apparatus being compliant to NFPA and ULC (as applicable) to be provided. The apparatus to include an officer side assembly with a Zico overhead hydraulic/electric ladder rack.	$174,427
0501-0011	An apparatus being compliant to NFPA and ULC (as applicable) to be provided. The apparatus to include an officer side storage tunnel with rear access.	$177,852
1005-0260	Chassis Prep International 4400 Maxx Force engine. Includes exhaust extension, rear tow eyes, high idle, master light switch, master battery switch, air inlet and battery charger receptacle.	$398
1005-0487	M2 (2) door, 181" WB & 47" frame cut, front tow hooks, 12K & 23K axles, ABS brakes, radiator cooling sized for current emissions requirements, 50 gallon fuel tank, EVS3000 transmission, (2) 1850CCA batteries, 270 alternator, ember separator and AC.	$10,996
1005-0488	M2 (2) door, 203" WB & 47" frame cut, front tow hooks, 12K & 23K axles, ABS brakes, radiator cooling sized for current emissions requirements, 50 gallon fuel tank, EVS3000 transmission, (2) 1850CCA batteries, 270 alternator, ember separator and AC.	$11,263
1005-0489	M2 (2) door, 215" WB & 47" frame cut, front tow hooks, 12K & 23K axles, ABS brakes, radiator cooling sized for current emissions requirements, 50 gallon fuel tank, EVS3000 transmission, (2) 1850CCA batteries, 270 alternator, ember separator and AC.	$12,190
1005-0490	M2 (2) door, 181" WB & 47" frame cut, front tow hooks, 12K & 24K axles, ABS brakes, radiator cooling sized for current emissions requirements, 50 gallon fuel tank, EVS3000 transmission, (2) 1850CCA batteries, 270 alternator, ember separator and AC.	$11,530
1005-0491	M2 (2) door, 203" WB & 47" frame cut, front tow hooks, 12K & 24K axles, ABS brakes, radiator cooling sized for current emissions requirements, 50 gallon fuel tank, EVS3000 transmission, (2) 1850CCA batteries, 270 alternator, ember separator and AC.	$11,796
1005-0492	M2 (2) door, 215" WB & 47" frame cut, front tow hooks, 12K & 24K axles, ABS brakes, radiator cooling sized for current emissions requirements, 50 gallon fuel tank, EVS3000 transmission, (2) 1850CCA batteries, 270 alternator, ember separator and AC.	$12,724
1005-0493	M2 (4) door, 226" WB & 47" frame cut, front tow hooks, 14.6K & 23K axles, ABS brakes, radiator cooling sized for current emissions requirements, 50 gallon fuel tank, EVS3000 transmission, (2) 1850CCA batteries, 270 alternator, ember separator and AC.	$22,406
1005-0494	M2 (4) door, 248" WB & 47" frame cut, front tow hooks, 14.6K & 23K axles, ABS brakes, radiator cooling sized for current emissions requirements, 50 gallon fuel tank, EVS3000 transmission, (2) 1850CCA batteries, 270 alternator, ember separator and AC.	$22,508
1005-0495	M2 (4) door, 260" WB & 47" frame cut, front tow hooks, 14.6K & 23K axles, ABS brakes, radiator cooling sized for current emissions requirements, 50 gallon fuel tank, EVS3000 transmission, (2) 1850CCA batteries, 270 alternator, ember separator and AC.	$22,508
1005-0496	M2 (4) door, 226" WB & 47" frame cut, front tow hooks, 14.6K & 24K axles, ABS brakes, radiator cooling sized for current emissions requirements, 50 gallon fuel tank, EVS3000 transmission, (2) 1850CCA batteries, 270 alternator, ember separator and AC.	$23,132
1005-0497	M2 (4) door, 248" WB & 47" frame cut, front tow hooks, 14.6K & 24K axles, ABS brakes, radiator cooling sized for current emissions requirements, 50 gallon fuel tank, EVS3000 transmission, (2) 1850CCA batteries, 270 alternator, ember separator and AC.	$23,235
1005-0498	M2 (4) door, 260" WB & 47" frame cut, front tow hooks, 14.6K & 26K axles, ABS brakes, radiator cooling sized for current emissions requirements, 50 gallon fuel tank, EVS3000 transmission, (2) 1850CCA batteries, 270 alternator, ember separator and AC.	$26,661
1005-0499	M2 (2) door, 189" WB & 47" frame cut, front tow hooks, 12K & 24K axles, ABS brakes, radiator cooling sized for current emissions requirements, 50 gallon fuel tank, EVS3000 transmission, (2) 1850CCA batteries, 270 alternator, ember separator and AC.	$11,796

1005-0500	M2 (2) door, 211" WB & 47" frame cut, front tow hooks, 12K & 24K axles, ABS brakes, radiator cooling sized for current emissions requirements, 50 gallon fuel tank, EVS3000 transmission, (2) 1850CCA batteries, 270 alternator, ember separator and AC.	$12,724
1005-0501	M2 (2) door, 223" WB & 47" frame cut, front tow hooks, 12K & 24K axles, ABS brakes, radiator cooling sized for current emissions requirements, 50 gallon fuel tank, EVS3000 transmission, (2) 1850CCA batteries, 270 alternator, ember separator and AC.	$12,724
1005-0502	M2 (4) door, 236" WB & 47" frame cut, front tow hooks, 14.6K & 24K axles, ABS brakes, radiator cooling sized for current emissions requirements, 50 gallon fuel tank, EVS3000 transmission, (2) 1850CCA batteries, 270 alternator, ember separator and AC.	$23,132
1005-0503	M2 (4) door, 256" WB & 47" frame cut, front tow hooks, 14.6K & 24K axles, ABS brakes, radiator cooling sized for current emissions requirements, 50 gallon fuel tank, EVS3000 transmission, (2) 1850CCA batteries, 270 alternator, ember separator and AC.	$23,235
1005-0504	M2 (4) door, 270" WB & 47" frame cut, front tow hooks, 14.6K & 26K axles, ABS brakes, radiator cooling sized for current emissions requirements, 50 gallon fuel tank, EVS3000 transmission, (2) 1850CCA batteries, 270 alternator, ember separator and AC.	$26,734
1005-0529	International 4400 (2) door, 181" WB & 47" frame cut, front tow hooks, 12K & 23K axles, ABS brakes, radiator cooling sized for current emissions requirements, 50 gal. right hand fuel tank, EVS3000 transmission, (3) 1950CCA batteries, 320 alternator, ember separator and AC.	$11,876
1005-0530	International 4400 (2) door, 203" WB & 47" frame cut, front tow hooks, 12K & 23K axles, ABS brakes, radiator cooling sized for current emissions requirements, 50 gal. right hand fuel tank, EVS3000 transmission, (3) 1950CCA batteries, 320 alternator, ember separator and AC.	$12,041
1005-0531	International 4400 (2) door, 215" WB & 47" frame cut, front tow hooks, 12K & 23K axles, ABS brakes, radiator cooling sized for current emissions requirements, 50 gal. right hand fuel tank, EVS3000 transmission, (3) 1950CCA batteries, 320 alternator, ember separator and AC.	$12,041
1005-0532	International 4400 (4) door, 226" WB & 47" frame cut, front tow hooks, 14K & 23K axles, ABS brakes, radiator cooling sized for current emissions requirements, 50 gal. right hand fuel tank, EVS3000 transmission, (3) 1950CCA batteries, 320 alternator, ember separator and AC.	$20,222
1005-0533	International 4400 (4) door, 248" WB & 47" frame cut, front tow hooks, 14K & 23K axles, ABS brakes, radiator cooling sized for current emissions requirements, 50 gal. right hand fuel tank, EVS3000 transmission, (3) 1950CCA batteries, 320 alternator, ember separator and AC.	$20,222
1005-0534	International 4400 (4) door, 260" WB & 47" frame cut, front tow hooks, 14K & 23K axles, ABS brakes, radiator cooling sized for current emissions requirements, 50 gal. right hand fuel tank, EVS3000 transmission, (3) 1950CCA batteries, 320 alternator, ember separator and AC.	$20,367
1005-0535	International 4400 (4) door, 226" WB & 47" frame cut, front tow hooks, 14K & 26K axles, ABS brakes, radiator cooling sized for current emissions requirements, 50 gal. right hand fuel tank, EVS3000 transmission, (3) 1950CCA batteries, 320 alternator, ember separator and AC.	$22,395
1005-0536	International 4400 (4) door, 248" WB & 47" frame cut, front tow hooks, 14K & 26K axles, ABS brakes, radiator cooling sized for current emissions requirements, 50 gal. right hand fuel tank, EVS3000 transmission, (3) 1950CCA batteries, 320 alternator, ember separator and AC.	$22,395
1005-0537	International 4400 (4) door, 260" WB & 47" frame cut, front tow hooks, 14K & 26K axles, ABS brakes, radiator cooling sized for current emissions requirements, 50 gal. right hand fuel tank, EVS3000 transmission, (3) 1950CCA batteries, 320 alternator, ember separator and AC.	$22,601
1005-0538	International 4400 (2) door, 189" WB & 47" frame cut, front tow hooks, 12K & 24K axles, ABS brakes, radiator cooling sized for current emissions requirements, 50 gal. right hand fuel tank, EVS3000 transmission, (3) 1950CCA batteries, 320 alternator, ember separator and AC.	$12,661
1005-0539	International 4400 (2) door, 211" WB & 47" frame cut, front tow hooks, 12K & 24K axles, ABS brakes, radiator cooling sized for current emissions requirements, 50 gal. right hand fuel tank, EVS3000 transmission, (3) 1950CCA batteries, 320 alternator, ember separator and AC.	$12,826
1005-0540	International 4400 (2) door, 224" WB & 47" frame cut, front tow hooks, 12K & 24K axles, ABS brakes, radiator cooling sized for current emissions requirements, 50 gal. right hand fuel tank, EVS3000 transmission, (3) 1950CCA batteries, 320 alternator, ember separator and AC.	$12,826
1005-0541	International 4400 (4) door, 234" WB & 47" frame cut, front tow hooks, 14K & 24K axles, ABS brakes, radiator cooling sized for current emissions requirements, 50 gal. right hand fuel tank, EVS3000 transmission, (3) 1950CCA batteries, 320 alternator, ember separator and AC.	$20,843
1005-0542	International 4400 (4) door, 256" WB & 47" frame cut, front tow hooks, 14K & 24K axles, ABS brakes, radiator cooling sized for current emissions requirements, 50 gal. right hand fuel tank, EVS3000 transmission, (3) 1950CCA batteries, 320 alternator, ember separator and AC.	$20,995
1005-0543	International 4400 (4) door, 268" WB & 47" frame cut, front tow hooks, 14K & 24K axles, ABS brakes, radiator cooling sized for current emissions requirements, 50 gal. right hand fuel tank, EVS3000 transmission, (3) 1950CCA batteries, 320 alternator, ember separator and AC.	$21,380
1025-0104	Driver Controlled Dif Lock. International chassis with 23,000 rear axle.	$642
1025-0105	Driver Controlled Dif Lock. International chassis with 26,000 rear axle.	$790
1025-0106	Driver Control Differential for M2.	$571
1050-0059	Freightliner aluminum wheels.	$1,327
1050-0060	International aluminum wheels.	$1,340

1160-0075	Freightliner three (3) piece front bumper. Bumper to be chrome and includes driver side mounting area for NFPA speaker.	$199
1200-0248	Freightliner Cummins ISL 330 HP 2013 EPA engine.	$1,235
1200-0249	Freightliner Cummins ISL 350 HP 2013 EPA engine.	$1,471
1200-0250	Freightliner Cummins ISC 345 HP 2013 EPA engine.	$3,447
1200-0251	Exhaust brake for use with Freightliner chassis.	$46
1200-0252	Jacobs C-Brake Engine Brake for use with Freightliner chassis.	$1,768
1200-0262	International Maxx Force 330 HP 2010 EPA engine.	$394
1200-0263	Exhaust Brake for use with International chassis.	$451
1200-0264	Engine Brake for use with International chassis.	$1,183
1510-0169	Universal air pack bottle bracket installed (EA). Commercial ES.	$134
1510-0171	Seating Package Two (2) Door Freightliner. Includes One (1) Talladega 910 Hi-Back Air Ride Driver and One (1) 911 Fixed Officer (Non-SCBA).	$331
1510-0173	Universal 911 Seating Package. Includes one (1) hi-back air ride suspension driver seat, one (1) hi-back fixed SCBA officer seat, and three (3) fixed SCBA rear seats.	$2,240
1510-0178	Seating Package Two (2) Door International. Includes One (1) Nat'l Brand Air Ride Driver and One (1) Nat'l Brand Air Ride Officer (Non-SCBA).	$133
1510-0239	Universal 911 Seating Package. Includes one (1) hi-back air ride suspension driver seat, one (1) hi-back air ride suspension officer seat, and three (3) fixed SCBA rear seats.	$55
1510-0245	Universal 911 Seating Package. Includes one (1) hi-back air ride suspension driver seat, one (1) hi-back air ride suspension SCBA officer seat, and two (2) fixed SCBA rear seats.	$2,240
1540-0062	Map Box. Locate between the driver and officer. Box to have a sanded finish with a black top. Rear area to be hinged forward with a single push button latch (ref #655283). Re-locate the NFPA siren and switches to the map (the standard locations for the dash for these items will have cover plates installed).The multi-plex screen is to remain dash area mounted	$3,439
1670-0042	Freightliner West Coast heated cab mirrors with remote control. Includes bright finish.	$285
1675-0155	Painted visor for International 4400 cab. Option 16XWD.	$209
1680-0165	Diamond plate trim package for a (2) door Freightliner.	$1,203
1680-0166	Diamond plate trim package for a (4) door Freightliner.	$1,934
1680-0167	Two (2) hood-mounted OEM air horns with driver and officer mounted foot switches.	$517
1680-0170	Diamond plate trim package for a (4) door International. Includes a full length driver side and a (2) piece officer side trim that will utilze pieces already supplied by the OEM.	$2,043
1680-0171	Diamond plate trim package for a (2) door International. Includes a full length driver side and an officer side trim that will utilze pieces already supplied by the OEM.	$1,352
1680-0172	Two (2) hood-mounted OEM air horns with driver and officer mounted foot switches.	$813
1680-0173	Engine block heater. Locate receptacle below the driver side cab door. International	$193
1680-0174	Philips 1000 watt engine block heater. Locate receptacle below the driver side cab door. Freightliner.	$131
1680-0184	Existing chassis to be modified to match wheelbase and frame cut of order configuration.	$1,210
1680-0198	International 4400 and 7400 series chassis raw material surcharge.	$660
1680-0199	International 7600 series chassis raw material surcharge.	$990
1685-0177	Cab gauge cluster with metric dominant speedometer.	$307
1685-0191	Diamond plate cover for battery charger/air compressor. Includes louvers for ventilation.	$238
1750-0241	Interior and exterior NFPA cab lighting package for (4) dr chassis. Consists of (4) incandescent interior and (4) incandescent under cab lights.	$161
1750-0242	Interior and exterior NFPA cab lighting package for (4) dr chassis (International). Consists of (4) incandescent interior and (4) incandescent under cab lights.	$161
1750-0245	Interior and exterior NFPA cab lighting package for (4) dr chassis. Consists of (4) incandescent interior and (4) incandescent under cab lights.	$161
1750-0247	Interior and exterior NFPA cab lighting package for (4) dr chassis. Consists of (4) incandescent interior and (4) incandescent under cab lights.	$161
3000	**Body**	
3100-0218	Driver side storage tunnel to hold (2) 6" x 10' hard suction hoses.	$1,989
3120-0409	Officer half side body with 42" wide forward and 56" wide rearward enhanced extended compartmentation. For use with a Zico drop down ladder rack.	$6,427
3130-0335	Top mount pump module (25MF) with area for double stacked crosslays w/divider and driver and officer side pump access panels (hinged).	$2,115
3130-0336	Top mount pump module (25MF) with area for double speedlays and driver and officer side pump access panels (hinged). Upper area behind TM includes panel cover.	$3,152
3130-0341	Top mount pump module (23MF) with area for double stacked crosslays w/divider and driver and officer side pump access panels (hinged).	$2,115
3130-0342	Top mount pump module (23MF) with area for double speedlays and driver and officer side pump access panels (hinged). Upper area behind TM includes panel cover.	$3,152
3130-0348	Top mount walkway for use with a 23" mainframe. Includes diamond plate walkway, side runningboards and walkway access steps.	$2,115

3130-0349	Top mount walkway for use with a 25" mainframe. Includes diamond plate walkway, side runningboards and walkway access steps.	$2,115
3130-0350	Speedlay module behind cab with area for (2) side by side preconnects with (1) center divider and runningboards. Includes (2) handrails mounted (1) each side of module for use with walkway access steps.	$1,038
3130-0351	Speedlay module behind cab with area for (2) side by side preconnects with (1) center divider and runningboards. Includes (2) handrails mounted (1) each side of module for use with walkway access steps.	$1,038
3130-0353	Top mount walkway for use with a 23" mainframe and speedlay module. Includes diamond plate walkway, side runningboards and walkway access steps.	$2,115
3130-0354	Top mount walkway for use with a 25" mainframe and speedlay module. Includes diamond plate walkway, side runningboards and walkway access steps.	$2,115
3130-0356	Top mount walkway for use with a 23" mainframe. Includes diamond plate walkway, side runningboards and walkway dual lighted LED folding steps.	$2,115
3130-0357	Top mount walkway for use with a 25" mainframe. Includes diamond plate walkway, side runningboards and walkway dual lighted LED folding steps.	$2,115
3130-0358	Top mount walkway for use with a 23" mainframe and speedlay module. Includes diamond plate walkway, side runningboards and walkway dual lighted LED folding steps.	$2,115
3130-0359	Top mount walkway for use with a 25" mainframe and speedlay module. Includes diamond plate walkway, side runningboards and walkway dual lighted LED folding steps.	$2,115
3136-0089	Two (2) pump compartment heaters are to be mounted in the pump area. Locate as low as possible within the pump module structure. Controlled with switch located on pump operator panel.	$1,690
3300-0180	Driver and Officer full height side body painted finish (job color) roll-up door package. Includes header plate(s) and dust brush(es).	$3,674
3305-0111	Red vinyl hose bed cover. Includes fixed forward attachment with side bungees and end flap with manually released attachments. For use with hosebed storage pan option.	$614
3305-0116	Aluminum double crosslay cover with side vinyl flaps. Crosslay cover to be hinged rearward. Includes grab handle(s), (2) hold downs and quick release side flap hold downs. Side flap covers color: Red	$605
3305-0117	(2) piece aluminum hosebed cover. Includes open area to driver side for access to tower(s) (as applicable), center hosebed divider with notched rear, gas shocks, positive hold opens/hold closed at rear, (2) grab handles- frt and (2) handrails -rear, (2) red vinyl end flaps with manual releases.	$6,129
3320-0049	Four (4) SCBA bottle storage. Located (2) each side in body wheel well area.	$685
3330-0108	Five (5) folding steps- two (2) officer and three (3) driver side front compartment face. Includes two (2) handrails - one (1) officer side and one (1) driver side of pump module and (1) light up high on driver side compartment face.	$534
3330-0109	Four (4) folding steps- one (1) officer and three (3) driver side front compartment face. Includes two (2) handrails - one (1) officer side and one (1) driver side of pump module and (1) light up high on driver side compartment face.	$416
3330-0110	Six (6) folding steps- three (3) officer and three (3) driver side front compartment face. Includes two (2) handrails - one (1) officer side and one (1) driver side of pump module and (2) lights up high on front compartment faces.	$652
3340-0420	Smooth plate panels of body interior compartments to have zolatone (gray) finish.	$3,880
3340-0422	Double hardsuction storage with NFPA compliant restraints. Locate over adjustable ladder brackets.	$602
3340-0423	Double hardsuction storage with NFPA compliant restraints. Locate (1) officer side on ladder rack and (1) driver side on compartment top.	$602
3340-0424	Double hardsuction storage with NFPA compliant restraints. Locate (1) officer side on ladder rack and (1) driver side on compartment top.	$602
3340-0428	Long hosebed divider.	$383
3340-0429	Main (structural) body rubrail package. Includes white scotchlite inserts.	$636
3340-0432	Long hosebed divider.	$402
3340-0434	Long hosebed divider. For use with hosebed storage pan option.	$336
3340-0439	Diamond plate single axle wheel well. Includes bolt-on composite wheel well, sanded fenderettes and mudflaps. Includes storage for (4) SCBA bottles - (2) driver side and (2) officer side.	$2,011
3340-0442	Diamond plate single axle wheel well. Includes bolt-on composite wheel well, sanded fenderettes and mudflaps. Includes storage for (8) SCBA bottles - (4) driver side and (4) officer side.	$2,602
3340-0443	Double hardsuction storage with NFPA compliant restraints. Locate (1) officer side on compartment top and (1) driver side on compartment top.	$602
3340-0444	Main (structural) body rubrail package. Includes white scotchlite inserts.	$722
3340-0445	Backboard storage. Storage for (1) backboard in officer side storage tunnel against hosebed side wall. Includes stop bracket.	$193

3340-0451	Double hardsuction storage with NFPA compliant restraints. Locate (2) driver side on compartment top.	$602
3340-0452	Hosebed storage pan for use with single fill tower. Pan dimensions to be 64.625" L x 40" W x 12.75" D.	$743
3340-0454	Long hosebed divider. For use with hosebed storage pan option.	$336
3340-0558	Storage brackets for (1) attic ladder and (3) pike poles (6', 8' and 10'). Locate the attic ladder and pike poles on outboard side of the ladder rack.	$481
3370-0069	Adjustable shelf. Location: Driver side forward body compartment.	$264
3370-0070	Adjustable shelf. Location: Driver side rearward body compartment.	$304
3370-0071	Adjustable shelf. Location: Officer side forward body compartment.	$264
3370-0072	Adjustable shelf. Location: Officer side rearward body compartment.	$304
3370-0076	Fixed shelf at upper area offset. Locate in forward and rearward full height compartments.	$184
3370-0079	Adjustable shelf. Location: Driver side forward body compartment. For use with full height or lower full depth compartment.	$286
3370-0080	Adjustable shelf. Location: Driver side wheel well body compartment. For use with full depth compartment.	$315
3370-0081	Adjustable shelf. Location: Driver side rearward body compartment. For use with full height or lower full depth compartment.	$315
3370-0082	Adjustable shelf. Location: Rear body compartment.	$286
3370-0083	Adjustable shelf. Location: Driver side forward body compartment. For use with upper shallow compartment.	$190
3370-0086	Adjustable shelf. Location: Officer side forward body compartment. For use with lower full depth compartment.	$286
3370-0087	Adjustable shelf. Location: Officer side rearward body compartment. For use with lower full depth compartment.	$315
3370-0088	Adjustable shelf. Location: Officer side forward body compartment. For use with upper shallow compartment.	$190
3370-0089	Adjustable shelf. Location: Officer side wheel well body compartment. For use with shallow depth compartment.	$190
3370-0090	Adjustable shelf. Location: Officer side rearward body compartment. For use with upper shallow compartment.	$190
3370-0105	Fixed shelf at compartment offset. Location: Driver side forward and rearward body compartments.	$215
3370-0106	Fixed shelf at compartment offset. Location: Officer side forward and rearward body compartments.	$215
3370-0107	Adjustable shelf. Location: Officer side forward body compartment. For use with lower full depth compartment and DEF tank.	$286
3370-0108	Fixed shelf at compartment offset. Location: Driver side forward and rearward body compartments.	$184
3370-0109	Fixed shelf at compartment offset. Location: Officer side forward and rearward body compartments.	$184
3370-0110	Adjustable shelf. Location: rear body compartment in upper area.	$190
3370-0139	Fixed shelf at compartment offset. Location: Officer side rearward body compartment.	$118
3370-0143	Fixed shelf B1 compartment. Locate just above the booster reel.	$184
3380-0104	Roll-out tray. Mount on driver side forward body compartment floor.	$600
3380-0105	Roll-out tray. Mount on driver side rearward body compartment floor.	$659
3380-0106	Roll-out tray. Mount on rear body compartment floor.	$600
3380-0107	Roll-out tray. Mount on officer side forward body compartment floor.	$600
3380-0108	Roll-out tray. Mount on officer side rearward body compartment floor.	$659
3380-0110	Roll-out tray. Mount on driver side forward body compartment floor.	$622
3380-0111	Roll-out tilt-down tray. Mount on driver side wheel well body compartment floor.	$832
3380-0112	Roll-out tray. Mount on driver side rearward body compartment floor.	$670
3380-0113	Roll-out tray. Mount on rear body compartment floor.	$622
3380-0114	Roll-out tray. Mount on officer side forward body compartment floor.	$622
3380-0115	Roll-out tray. Mount on officer side rearward body compartment floor.	$670
3380-0116	Adjustable roll-out tray. Mount in driver side forward body compartment.	$906
3380-0117	Adjustable roll-out tray. Mount in driver side rearward body compartment.	$983
3380-0118	Adjustable roll-out tray. Mount in officer side forward body compartment.	$906
3380-0119	Adjustable roll-out tray. Mount in officer side rearward body compartment.	$983
3380-0120	Adjustable roll-out tray. Mount in rear body compartment.	$906
3380-0121	Adjustable roll-out toolboard. Mount in driver side forward body compartment.	$382
3380-0122	Adjustable roll-out toolboard. Mount in driver side rearward body compartment.	$382
3380-0123	Roll-out tray. Mount on officer side forward body compartment floor. For use with DEF tank.	$622
3380-0170	Roll-out generator tray. Includes tray interlock for full tray extension generator operations. Locate in rearward driver side body compartment.	$828
4000	**Pumps/Tanks**	

4005-0105	Hale QMAX pump.	$4,935
4005-0107	Pump gear box to be 21L. For use with 1500 gpm QMAX pump.	$4,935
4005-0109	Pump gear box to be 21X. For use with 1500 gpm QMAX pump.	$4,935
4010-0116	Tank with 1000 water. For use with 23" mainframe. Fill tower to be offset to driver side.	$849
4010-0124	Tank with 970 water and 30 A foam and 30 B Foam (25MF). For use with Rescue Pumper ES. B foam cell is for use with dealer supplied and installed configuration.	$1,716
4010-0136	Tank with 1000 water and 30 foam (25MF). For use with Rescue Pumper ES. Includes forward area driver side direct tank fill connection port.	$576
4020-0033	2.5" Officer Rear Tank Inlet. Includes Water Level Gauge.	$961
4020-0034	Rear tank dump. Includes painted steel assembly with manually actuated valve on driver side of dump assembly and integral manual extension chute.	$2,874
4020-0035	Rear tank dump. Includes painted steel assembly with manually actuated valve on driver side and manual slip-on chute. Includes painted steel slip-on elbow and extension with support bracket (all shipped loose).	$3,510
4405-0067	Booster Reel. Locate reel in B1 compartment. Includes 200' of 1" hose, air blow-out and body mounted rewind switch.	$4,107
4405-0068	Booster Reel with air actuated operator panel control. Locate reel in B1 compartment. Includes 200' of 1" hose, air blow-out and officer side body mounted rewind switch (below warning label).	$4,211
4405-0069	Auxilary 2.5" Officer Side Panel Intake. Includes officer side panel controller.	$964
4405-0070	Booster Reel with air actuated operator panel control. Locate reel centered in hosebed storage pan. Includes 200' of 1" hose, hose rollers on officer side of the body, air blow-out and officer side pump panel mounted rewind switch (below warning label).	$4,211
4405-0074	Booster Reel with air actuated operator panel control. Locate reel in B1 compartment. Reel for use with dealer installed hose and dealer provided hose connections to reel. Included to be an air blow-out and officer side body mounted rewind switch (below warning label).	$3,311
4410-0042	Plumbing Kit for use with a Hale Pump and Top Mount Pump Module. To include the Master Intake and Discharge Gauges, Pressure Governor, (7) 2.5" Pressure Gauges, (1) 2" Tank Fill, (1) 3" tank to pump, (1) 2.5" Driver Side Auxiliary Intake, (2) 2.5" Driver Side Discharger, (1) 3" with 3" valve Driver Side Rear Discharge (droop shipped loose) locate below hosebed, (2) 1.5" Preconnect Discharges, (1) 3" Deck Gun and (2) 6" Intake Caps (Shipped Loose).	$895
4415-0788	3" officer side discharge (forward of steamer) with NFPA droop with cap. Includes 2.5" pressure gauge on pump operator panel.	$494
4415-0790	1.5" front bumper discharge. Locate discharge in bumper hose storage tray (outboard side wall) down low. Includes 2.5" pressure gauge on pump operator panel.	$4,607
4415-0797	3" officer side discharge (forward of steamer) with NFPA droop with cap. For use with Side Mount Pump Module. Includes 2.5" pressure gauge, and bleeder on panel.	$494
4415-0798	3" officer side discharge (forward of steamer) with NFPA droop with cap. For use with Top Mount Pump Module. Includes 2.5" pressure gauge, and bleeder on panel.	$494
4415-0799	1.5" front bumper discharge. Locate discharge in bumper hose storage tray down low. For use with Side Mount Pump Module. Includes 2.5" pressure gauge, and bleeder on panel.	$4,607
4415-0800	1.5" front bumper discharge. Locate discharge in bumper hose storage tray (outboard side wall) down low. For use with Top Mount Pump Module. Includes 2.5" pressure gauge, and bleeder on panel.	$4,607
4415-0839	2.5" officer side discharge (rearward of steamer) with NFPA droop with cap. For use with Side Mount Pump Module. Includes 2.5" pressure gauge, and bleeder on panel.	$1,515
4415-0851	2.5" officer side discharge (rearward of steamer) with NFPA droop with cap. For use with Top Mount Pump Module.	$1,465
4415-0917	2.5" Right Rear Discharge Akron Manual Valve includes gauge and bleeder. Location: [#LOC].	$1,407
4430-0096	Hale 2.1A Foam System. Provides foam for up to (4) discharges: 1.5" Double Crosslay or Speedlay (as applicable), and the following discharges if optioned: 1.5" Frt Bumper and Booster Reel.	$5,442
4430-0097	Dealer installed foam system. Final manifold/discharge configuration to be defined by foam system application installed at/by dealer.	$1,386
4430-0098	Hale 2.1A Foam System. Provides foam for up to (4) discharges: 1.5" Double Crosslay or Speedlay (as applicable), and the following discharges if optioned: 1.5" Frt Bumper and Booster Reel.	$5,551
4430-0099	Hale 2.1A Foam System. Provides foam for up to (4) discharges: 1.5" Double Crosslay or Speedlay (as applicable), and the following discharges if optioned: 1.5" Frt Bumper and Booster Reel.	$5,551
4430-0100	Foam ready system. Final manifold/discharge configuration to be defined by foam system application installed at/by dealer.	$1,386
4440-0118	Auxilary 2.5" Officer Side Panel Intake. Includes officer side panel controller.	$964
4440-0122	5" Front Intake with 6" front swivel located on officer side front bumper. Commercial ES.	$10,721
4445-0043	Mechanical Tachometer Counter Connection on the Driver Side Pump Panel.	$218
4445-0044	Mechanical Tachometer Counter Connection on the Pump Operator's Panel. For use with side mount application.	$218

4445-0045	Mechanical Tachometer Counter Connection on the Pump Operator's Panel. For use with top mount application.	$218
5000	**Electrical**	
5010-0059	VFD Text display for V-MUX electrical system. Location: [#LOC].	$839
5110-0087	Tekonsha model Prodigy 2 trailer brake controls wired to connector. Control located in cab accessible to driver. Requires 9-pin connector.	$938
5130-0064	Electric reel with 200' 10/3 black. Ceiling mounted in driver side rearward body compartment in upper area offset rearward. Includes reel mounted rollers and rewind switch. For use with dealer/E-ONE installed generator only.	$1,887
5130-0065	Electric reel with 200' 10/3 black. Ceiling mounted in driver side rearward body compartment in lower area offset rearward. Includes reel mounted rollers and rewind switch. For use with dealer/E-ONE installed generator only.	$1,887
5130-0066	Electric reel with 200' 10/3 black. Ceiling mounted in officer side rearward body compartment in lower area offset rearward. Includes reel mounted rollers and rewind switch. For use with dealer/E-ONE installed generator only.	$1,887
5150-0107	Whelen arrow turn signals, front and rear as applicable, to be set to sequential flash pattern.	$25
5250-0083	Generator Package. Includes 5kw portable gas generator, (2) 20AMP TL receptacles. One each side on rear compartment face, (2) 500W quartz lights with internal pole on the pump module and (6) place breaker box with master breaker forward wall L1.	$8,214
5250-0084	Generator Package. Includes (2) 20AMP TL receptacles. One each side on rear compartment face, (2) 500W quartz lights with internal pole on the pump module and (6) place breaker box (master breaker to be installed by dealer with size of generator to be determined by dealer) forward wall L1.	$4,312
5250-0087	Generator Package. Includes 5kw portable gas generator located in the officer side hosebed storage pan, (2) 20AMP TL receptacles, one each side on rear compartment face, (2) 500W quartz lights with internal pole on the pump module and (6) place breaker box with master breaker forward wall L1.	$8,382
5250-0088	Dealer Installed Generator Package. Includes (2) 20AMP TL receptacles, one each side on rear compartment face, (2) 500W quartz lights with internal pole on the pump module and (6) place breaker box (master breaker to be installed by dealer with size of generator to be determined by dealer) forward wall L1.	$4,433
5250-0089	Generator Package. Includes 8kw hydraulic generator located in the officer side hosebed storage pan, (2) 20AMP TL receptacles, one each side on rear compartment face, (2) 500W quartz lights with internal pole on the pump module and (6) place breaker box with master breaker forward wall L1. Includes generator control / PTO engage switch mounted within the cab, a gauge panel shall accompany the generator package.	$16,185
5250-0090	Dealer Installed Generator Package. Includes (2) 20AMP TL receptacles, one each side on rear compartment face, (2) 500W quartz lights with internal pole on the pump module and (6) place breaker box (master breaker and PTO to be installed by dealer with size of generator to be determined by dealer) forward wall L1.	$4,519
5250-0091	Generator Package. Includes (2) 20AMP TL receptacles. One each side on rear compartment face, (2) 1500W quartz lights with internal pole on the pump module and (6) place breaker box (master breaker to be installed by dealer with size of generator to be determined by dealer) forward wall L1.	$4,838
5250-0096	Generator Package. Includes Harrison 5.5KW gas generator, (2) 20AMP TL receptacles- (1) each side on rear compartment face, (2) 500W quartz lights with internal pole on the pump module and (6) place breaker box with master breaker forward wall L1.	$6,629
5250-0100	Generator Package. Includes 5.5kw Harrison gas generator located in the officer side hosebed storage pan, (1) remote start control located on the pump operator panel, (2) 20AMP TL receptacles, one each side on rear compartment face, (2) 500W quartz lights with internal pole on the pump module and (6) place breaker box with master breaker forward wall L1.	$6,707
5250-0110	Generator Package. Includes 8kw hydraulic generator located in the officer side hosebed storage pan, (2) 20AMP TL receptacles, one each side on rear compartment face, (2) magna fire quartz lights 900W/240V model KR-939-I with internal pole on the pump module and (6) place breaker box with master breaker forward wall L1. Includes generator control / PTO engage switch and a gauge panel located adjacent to breaker box.	$16,793
5300-0239	Whelen Freedom model FN66QLED 66" with MKEZ7 mounts. All LED (forward facing) light bar.	$694
5300-0240	Whelen Justice model JE2NFPA 56" with MKEZ7 mounts. All LED (forward facing) light bar.	$694
5300-0341	Whelen Justice model JE2NFPA 56" with MKEZ7 mounts. All LED (forward facing) light bar.	$694
5310-0037	Light bar Federal Signal Signal Master SMLED6. Directional light bar control is to be located in the officer side of center dash electrical cover. Includes recessed box for traffic advisor. For use with Freightliner Chassis.	$870
5310-0038	Light bar Federal Signal Signal Master SMLED6. Directional light bar control is to be located on bail bracket below overhead console. Includes recessed box for traffic advisor. For use with International Chassis.	$870

5310-0040	Whelen Traffic Advisor Model TAL65 LED. Directional light bar control is to be located in the center overhead console. Includes recessed box for traffic advisor. For use with Freightliner Chassis.	$1,679
5310-0041	Whelen Traffic Advisor Model TAL65 LED. Directional light bar control is to be located on bail bracket below overhead console. Includes recessed box for traffic advisor. For use with International Chassis.	$1,679
5450-0129	Federal NightFighter (PR) with internal pole. Pump module mounted.	$2,488
5450-0144	Fire Research Evolution 12V LED scene light model FCA530-V15-SW-H with external push-up pole. Includes switch in cab accessible to driver. Location: [#LOC].	$2,493
5450-0154	Fire Research Evolution 12V LED scene light model FCA510E-V15-SW with internal pull-up pole. Includes switch accessible to driver. Location: [#LOC].	$2,493
5450-0161	Light Whelen 12V Pioneer model PCP2 with internal push-up pole mount (Havis KR-SB-4PCP2-S-I). Includes switch on light head. Location(s): [#LOC].	$2,518
7000	**Loose Equipment**	
7950-0019	Ladder & Equipment Package. Includes: Alco-Lite PEL24, PRL14, FL10 w/feet, (1) 8' and (1) 10' pike pole, (2) 6"x10' hard suction hoses, (2) axes w/mntng brkts (ship loose) and (1) 6" strainer (ship loose).	$4,014
7950-0020	Ladder & Equipment Package. Includes: Duo-Safety 900-A 24', 775-A 14, 585-A 10' w/feet, (1) 8' and (1) 10' pike pole, (2) 6"x10' hard suction hoses, (2) axes w/mntng brkts (ship loose) and (1) 6" strainer (ship loose).	$4,014
8000	**Paint & Lettering**	
9000	**Delivery / Warranty / Service**	
8100-0239	Cab paint two tone. Upper FLNA 4006 White / lower FLNA 3204 Red. International.	$760
8100-0240	Cab paint two tone. Upper FLNA 4006 White / lower FLNA 3225 Red. International.	$760
8100-0241	Cab paint two tone. Upper FLNA 4006 White / lower FLNA 1219 Yellow. International.	$760
8100-0248	Paint cab two-tone. LowerDuPont L6572EG Red/UpperDuPont L0006EG White.	$2,347
8100-0249	Paint cab two-tone. LowerDuPont L6636EG Red/UpperDuPont L0006EG White.	$2,347
8100-0250	Paint cab two-tone. Lower DuPont L0006 White/ Upper DuPont L6572EG Red.	$2,347
8100-0251	Paint cab two-tone. Lower DuPont 766281EG Yellow/ Upper DuPont L0006EG White.	$2,347
8100-0253	Cab paint two tone. Upper FLNA 3225 red / lower FLNA 4006 white. International.	$760
8100-0262	Paint cab two-tone. LowerDuPont L2450EG Red/UpperDuPont L0006EG White.	$2,456
8100-0263	Paint cab two-tone. LowerDuPont L2452EG Red/UpperDuPont L0006EG White.	$2,456
8100-0264	Paint cab two-tone. LowerDuPont L2451EG Red/UpperDuPont L0006EG White.	$2,456
8100-0265	Paint cab two-tone. LowerDuPont L2454EG Lime Green/UpperDuPont L0006EG White.	$2,456
8100-0266	Paint cab two-tone. LowerDuPont L2518EG Lime Green/UpperDuPont L0006EG White.	$2,456
8100-0267	Paint cab two-tone. LowerDuPont L2519EG Lime Green/UpperDuPont L0006EG White.	$2,456
8100-0268	Paint cab two-tone. Lower DuPont 766710EG Yellow/ Upper DuPont L0006EG White.	$2,456
8100-0269	Paint cab two-tone. LowerDuPont P2450EG Red/UpperDuPont 767681EG Black.	$2,456
8100-0270	Paint cab two-tone. LowerDuPont P2452EG Red/UpperDuPont 767681EG Black.	$2,456
8100-0271	Paint cab two-tone. LowerDuPont P2451EG Red/UpperDuPont 767681EG Black.	$2,456
8100-0272	Paint cab two-tone. LowerDuPont L6752EG Red/UpperDuPont 767681EG Black.	$2,456
8100-0273	Paint cab two-tone. LowerDuPont L6636EG Red/UpperDuPont 767681EG Black.	$2,456
8100-0274	Paint cab two-tone. LowerDuPont P2454EG Lime Green/UpperDuPont 767681EG Black.	$2,456
8100-0275	Paint cab two-tone. LowerDuPont P2518EG Lime Green/UpperDuPont 767681EG Black.	$2,456
8100-0276	Paint cab two-tone. LowerDuPont P2519EG Lime Green/UpperDuPont 767681EG Black.	$2,456
8100-0277	Paint cab two-tone. Lower DuPont 766710EG Yellow/ Upper DuPont 767681EG Black.	$2,456
8100-0278	Paint cab two-tone. Lower DuPont 766281EG Yellow/ Upper DuPont 767681EG Black.	$2,456
8100-0285	Cab paint two tone. Upper FLNA 4006 White / lower FLNA 3047 Red. International.	$796
8100-0286	Cab paint two tone. Upper FLNA 4006 White / lower FLNA 3035 Red. International.	$796
8100-0287	Cab paint two tone. Upper FLNA 4006 White / lower FLNA 3221 Red. International.	$796
8100-0288	Cab paint two tone. Upper FLNA 4006 White / lower FLNA 6257 Lime Green. International.	$796
8100-0289	Cab paint two tone. Upper FLNA 4006 White / lower FLNA 6051 Lime Green. International.	$796
8100-0290	Cab paint two tone. Upper FLNA 4006 White / lower FLNA 6074 Lime Green. International.	$796
8100-0291	Cab paint two tone. Upper FLNA 4006 White / lower FLNA 1218 Yellow. International.	$796
8100-0292	Cab paint two tone. Upper FLNA 4145 Black / lower FLNA 3035 Red. International.	$796
8100-0293	Cab paint two tone. Upper FLNA 4145 Black / lower FLNA 3035 Red. International.	$796
8100-0294	Cab paint two tone. Upper FLNA 4145 Black / lower FLNA 3221 Red. International.	$796
8100-0295	Cab paint two tone. Upper FLNA 4145 Black / lower FLNA 3225 Red. International.	$796
8100-0296	Cab paint two tone. Upper FLNA 4145 Black / lower FLNA 3204 Red. International.	$796
8100-0297	Cab paint two tone. Upper FLNA 4145 Black / lower FLNA 6257 Lime Green. International.	$796
8100-0298	Cab paint two tone. Upper FLNA 4145 Black / lower FLNA 6051 Lime Green. International.	$796
8100-0299	Cab paint two tone. Upper FLNA 4145 Black / lower FLNA 6074 Lime Green. International.	$796
8100-0300	Cab paint two tone. Upper FLNA 4145 Black / lower FLNA 1218 Yellow. International.	$796
8100-0301	Cab paint two tone. Upper FLNA 4145 Black / lower FLNA 1219 Yellow. International.	$796
8200-0049	3" Scotchlite Letters (60).	$1,110
8300-0127	4" White Scotchlite stripe. Locate low on cab and body.	$891

8300-0128	4" red Scotchlite stripe. Locate low on cab and body.	$891
8300-0132	4" Red Scotchlite stripe. Locate low on cab and body.	$891
8300-0133	4" Black Scotchlite stripe. Locate low on cab and body.	$891
8300-0134	4" Gold Scotchlite stripe. Locate low on cab and body.	$891
8400-0023	Install customer supplied logo. Location: [#LOC].	$74

Notes:

1) Availability of options are limited by other options selected, and not all options are available in every chassis/apparatus configuration. Selection of an option may require several of the above parts/items to complete the option package.

2) Certain options, alone or in combination with other options, may require heavier axle/suspension packages, longer frames, or reinforced frames at additional cost per the above price list.

3) To configure options, the E-One State Term Schedule authorized dealer will use quote configuration software to select the components necessary to effect the option, feature, or configuration requested and quote the total option price.

Fire Apparatus Quotation for:
STATE OF OHIO TERM SCHEDULE

Quotation Number: 57474 Rev: 4

Unit Description: TDPM-COMM

Quote Description: Tradition Pumper, Commercial - Freightliner 2-door

Salescode	Extended Description	Qty
TESTING COMPLIANCE STANDARD		
1001-0015	The E-ONE supplied components of the vehicle shall meet the requirements of NFPA 1901, 2009 edition.	1
CHASSIS MODEL		
1005-0505	M2 (2) door, 185" WB & 41" frame cut, front tow hooks, 12K & 23K axles, ABS brakes, radiator cooling sized for current emissions requirements, 50 gal. left hand fuel tank and 6 gal diesel exhaust fluid tank, EVS3000 transmission, (2) 1850CCA batteries, 275 alternator, ember separator, AC.	1
CHASSIS PREP		
1020-0010	Comm Chassis Prep E-1 Supp-FL.	1
WHEEL OPTIONS		
1050-0034	Freightliner chassis rims painted job color. Tradition.	1
TIRE OPTIONS		
1060-0050	Tire pressure monitoring valve stem caps.	1
AIR SYSTEM OPTIONS		
1110-0010-277	Air inlet. To charge brake system. Commercial chassis only. Location: driver's door step area.	1
1110-0075	Dual Stuttertone Hood Mounted Air Horns with Driver and Officer Foot Switches to be Supplied and Installed by Freightliner. Tradition	1
ENGINES & TRANSMISSIONS		
1200-0126	Chassis speed to be electronically limited and not to exceed a maximum of 68 MPH. Note: Speed rating may be lower based off OEM tire ratings provided on chassis.	1
1200-0248	Freightliner Cummins ISL 330 HP 2013 EPA engine.	1
1200-0251	Exhaust brake for use with Freightliner chassis.	1
CHASSIS OPTIONS		
1680-0011	Tow eyes rear below body, painted.	1

1680-0078	Tow hooks front. Not available with extended front bumper. Tow hooks are OEM supplied with chassis.	1
1680-0110	Chassis Trim Package for a (2) door Freightliner.	1
1680-0234-R01-P0	The fuel tank to be 50 gallons and located to the left hand side of cab.	1
1680-0235-R01	The batteries to be located under left hand side of cab.	1
CAB BADGE PACKAGE		
1610-0000	Cab and body to have applicable E-ONE logos.	1
MIRRORS		
1670-0034	Freightliner West Coast heated cab mirrors with remote control. Tradition.	1
MISC EXTERIOR CAB OPTIONS		
1675-0007	Diesel fuel only label.	1
SEATS		
1510-0139	Seating Package Two (2) Door Freightliner. Includes One (1) Seats Inc 911 Universal Hi-Back Air Ride Driver and a Two (2) Person Bench Seat.	1
1685-0030	Seating capacity tag of three occupants.	1
CAB ELECTRICAL OPTIONS		
1750-0059-277-04	Receptacle inlet 20 amp with a Yellow cover. Location: driver's door step area.	1
1750-0343	Battery charger E-ONE LPC 20. 120 volt inlet, 20 amp output.	1
BODY COMPT LEFT SIDE		
3100-0095	Driver side body with full height 36" wide forward and 36" wide rearward compartmentation. Includes (1) 56" wide compartment over the wheel well.	1
BODY COMPT RIGHT SIDE		
3120-0004	Officer half side body with 36" wide forward and 36" wide rearward compartmentation. Includes adjustable ladder tracks.	1
BODY COMPT REAR		
3110-0005	Full Height Rear Compartment. Includes smooth plate panels.	1
3340-0080	Bolt-on diamond plate 18" tailboard (full width of body). Includes (2) squared off beavertails (no stanchions) with removable outer panels and handrails- (2) vertically on trailing edge of body and horizontally mounted handrail(s) below hosebed.	1
DOORS		
3300-0017-004	Door roll up short (up to 45") with satin finish ROM. Location(s): L2.	1
3300-0017-015	Door roll up short (up to 45") with satin finish ROM. Location(s): R1.	1
3300-0017-016	Door roll up short (up to 45") with satin finish ROM. Location(s): R2.	1
3300-0019-003	Door roll up tall (greater than 45") with satin finish ROM. Location(s): L1.	1
3300-0019-005	Door roll up tall (greater than 45") with satin finish ROM. Location(s): L3.	1

3300-0019-027	Door roll up tall (greater than 45") with satin finish ROM. Location(s): B1.	1
SHELVES		
3370-0025-099	Permanent shelf. Locate in L1 at offset (above extrusion if applicable).	1
3370-0025-100	Permanent shelf. Locate in L3 at offset (above extrusion if applicable).	1
COVERS		
3305-0007-000-02	Vinyl Red hose bed cover with attached rear flap(s).	1
3305-0008-000-02	Vinyl Red crosslay cover with attached side flaps.	1
PUMP MODULE		
3130-0166	Pump Module to be 72" wide (side to side). Includes upper, lower, crosswalk, speedlay and tranverse module(s) if applicable.	1
3130-0192	Side Mount Pump Module. Includes area for single stacked double crosslay (notched divider).	1
PUMP PANELS		
3134-0011	Officer side pump panel to be vertically hinged on forward extrusion. Panel(s) to be secured in the closed position with push button latches. Upper panel to be held open with gas shock.	1
3134-0016	Stainless steel driver and officer side pump panels.	1
3134-0050	The gauge panel is to swing downward/forward for access to electrical connections on panel. Includes two (2) cable hold opens, and push button latches.	1
MISC PUMP PANEL OPTIONS		
4460-0003	Pump panel tags color coded per NFPA compliance.	1
PUMP MODULE OPTIONS		
3136-0038	Module mainframe for use with M2 chassis with 23,000 rear axle.	1
3136-0058	E-ONE logo mounted one each side on pump module/preconnect panels. Logos to be sized as applicable to available space on panels.	1
WATER TANK		
4010-0178	1030 Gallon "T" Water Tank. UPF Poly III color fill towers. Note: Any foam cell(s) and/or storage options through the tank will reduce the overall water capacity.	1
TANK PLUMBING		
4450-0010	2" tank fill Akron manual valve.	1
4450-0119	3" tank to pump Akron manual valve w/4" plumbing.	1
LADDER STORAGE / RACKS		
3365-0018	Hold down brackets to secure a 2-section extension and roof ladder.	1
3365-0025-515	Attic ladder mounting brackets (PR). Locate officer side compartment top.	1
3365-0028	Hard Suction Storage Rack. Driver side compartment top. Includes spring hold downs and scuff plates behind spring mounts (as applicable).	1
3365-0031	Hard Suction Storage Rack. Officer side in adjustable track above ladders (if	1

	applicable). Includes spring hold downs and scuff plates.	
3365-0034-515	(2) aluminum pike pole storage tubes. Locate officer side compartment top.	1
3365-0049	Brand of ladders capable of being carried on unit to be Alco-Lite.	1
3365-0086-B99	The pike pole(s) capable of being stored are to be the following length: (2) 10' pike poles.	1
3365-0087-C57	The length of ladders capable of being stored shall be the following: 24' 2-section and 14' roof ladder.	1
3365-0168	Pike pole tube secondary retaining pin(s) with cable. Locate on end of pike pole tube(s).	1
HANDRAILS / STEPS		
3330-0103	Dual lighted LED folding steps rear NFPA. Includes folding steps on driver side (staggered stepped as applicable with tailboard depth) for NFPA hosebed access and handrail mounted on driver side upper hosebed side (as applicable).	1
3330-0105-060	Dual lighted LED folding step. Location: officer side front compartment face. Each location requires a minimum of (1) handrail per NFPA.	1
3330-0105-062	Dual lighted LED folding step. Location: driver side front compartment face. Each location requires a minimum of (1) handrail per NFPA.	3
MISC BODY OPTIONS		
3090-0002	The unit has no overall height restrictions.	1
3090-0004	The unit has no overall length restrictions.	1
3090-0007	The hose bed is to have NFPA capacity.	1
3340-0004	Hosebed above the booster tank. Includes forward hosebed and tower(s) cover plate work (as applicable). Hosebed adjustable divider extrusion rearward of the furthest tower is to run full width of the hosebed (as is practical with other hosebed mounted equipment).	1
3340-0015	Diamond plate single axle wheel well. Includes bolt-on composite wheel well liners and aluminum trim fenderettes.	1
3340-0035	Divider Long. To run full length of hose bed (front to rear).	1
3340-0074	Body mainframe and hosebed side assemblies for a 85" high body.	1
3340-0093	Mud flaps, rear, black with E-ONE logo.	1
3340-0110	The rear of each hose bed divider to have a hand hold cut-out(s).	1
3340-0128	Bolt-in partition walls. Locate in lower rear compartment transverse area. Partitions to separate the side rear compartments from the rear compartment.	1
3340-0145	Rubrail for the body and pump area module(s).	1
SCBA BOTTLE STORAGE		
3320-0020	SCBA Bottle Storage. (4) Fire Shopp SCBA bottle storage with hinged doors with push button latches. (2) officer side and (2) driver side in wheel well area.	1
PUMPS		
4005-0030	Rating 1250 GPM	1

4005-0054	Hale Qflo-23L 1250 pump. Tradition.	1
PUMP CERTIFICATION		
4475-0000	Pump certification 750-2250 GPM	1
PUMP OPTIONS		
4015-0053-198	Steamers to be Flush + 1". Location: driver's side.	1
4015-0053-199	Steamers to be Flush + 1". Location: officer's side.	1
4015-0101	Pump cooler, 1/4" valve with 3/8" tubing.	1
INTAKES		
4440-0005	2.5" Left Intake Akron Manual Valve.	1
INTAKE OPTIONS		
4445-0016	Intake relief valve, Hale 2.5".	1
DISCHARGES AND PRECONNECTS		
4415-0012-654	1.5" crosslay with Akron manual valve. Location: crosslay 1 & 2.	2
4415-0022-350	2.5" Left Rear Discharge Akron Manual Valve. Location: left rear discharge.	1
4415-0041	3" Deck Gun Discharge, Akron manual valve.	1
4415-0161-581	2.5" Left Panel Discharge Akron Manual Valve w/30 Degree Droop. Location: left side discharge 1.	1
4415-0161-582	2.5" Left Panel Discharge Akron Manual Valve w/30 Degree Droop. Location: left side discharge 2.	1
4415-0164-583	2.5" Right Panel Discharge Akron Manual Valve w/30 Degree Droop. Location: right side discharge 1.	1
4417-0106-L88	Deck gun piping to be positioned centered in deck gun channel or centered and offset forward in dunnage area (as applicable to upper module area design).	1
DISCHARGE OPTIONS		
4417-0058-350	Bleeder drain valve plumbed to: left rear discharge.	1
4417-0058-573	Bleeder drain valve plumbed to: crosslay preconnect.	2
4417-0058-575	Bleeder drain valve plumbed to: left discharge.	2
4417-0058-576	Bleeder drain valve plumbed to: right discharge.	1
4417-0101-356	Automatic drain valve. For: deck gun.	1
PRESSURE GOVERNORS		
4465-0005	Class 1 Captain pressure governor.	1
GAUGES		
4435-0001	Class 1 Intelli-Tank water tank level gauge.	1
4435-0013	4.5" Class 1 compound pressure gauge (30-0-600 PSI).	2
4435-0015-350	2.5" Class 1 compound pressure gauge (30-0-600). Discharge(s): left rear discharge.	1

4435-0015-352	2.5" Class 1 compound pressure gauge (30-0-600). Discharge(s): 1.5 in. crosslay preconnect.	2
4435-0015-356	2.5" Class 1 compound pressure gauge (30-0-600). Discharge(s): deck gun.	1
4435-0015-581	2.5" Class 1 compound pressure gauge (30-0-600). Discharge(s): left side discharge 1.	1
4435-0015-582	2.5" Class 1 compound pressure gauge (30-0-600). Discharge(s): left side discharge 2.	1
4435-0015-583	2.5" Class 1 compound pressure gauge (30-0-600). Discharge(s): right side discharge 1.	1
4435-0069	Class 1 ENFO IV system on pump operator's panel.	1
ELECTRICAL SYSTEMS		
5010-0014-G97	Vehicle data recorder for commercial cab - 2009 NFPA compliant. Includes occupant detection with display. Display location: cab dash above transmission shift panel.	1
5010-0036	V-MUX Electrical system for pumper / tanker / rescue.	1
5010-0059-339	VFD Text display for V-MUX electrical system. Location: center of dash.	1
LIGHT BARS		
5300-0053	Light bar Whelen Freedom model FN66QLED 66" with MKEZ7 mounts. All LED light bar without rear facing LEDs. Location: Centered on the front cab roof.	1
WARNING LIGHT PACKAGES		
5550-0128-535	Whelen Super LED lower level warning light package. Includes (6) red 600 LED light heads, (2) red LIN3 lights and (2) red 500 LED light heads w/chrome flanges. Locate side facing lights: at forward most position, centered in rear wheel well, and side facing at rear of body in rubrail if equipped.	1
WARNING LIGHTS		
5600-0078-479-06	Whelen Super LED beacon (PR) model L31H with Red domes. Location rear upper body on aerial style brackets.	1
5600-0149-336	Hazard (door ajar) light, 2.5" incandescent. Location: cab dash.	1
SIRENS		
5500-0009	Federal PA300 electronic siren recessed mounted.	1
5500-0024-846	The electronic siren control is to be located on the center overhead console offset to driver side.	1
SPEAKERS		
5510-0029-209	Speaker, Federal Signal Dynamax ES100 with "E-ONE" grille through bumper. Location: driver side front bumper.	1
DOT LIGHTING		
5150-0007	Whelen 600 series LED vertical mount tail lights. Includes LED stop/tail, arrow turn and halogen back-up lights with vertical Cast 3 housing and weatherproof connectors.	1

5150-0017	License plate light LED with chrome housing located at the rear of the body.	1
5150-0022	Marker light LED body package. Commercial pumper bodies only.	1
LIGHTS - COMPARTMENT, STEP & GROUND		
5380-0008	Compartment light package incandescent for small bodies.	1
5380-0027	Ground light package for cab and body - small.	1
LIGHTS - DECK AND SCENE		
5390-0000-395	Deck light - Unity 12 volt (PR). Location: rear body/beavertail area on the trailing edge up high.	1
5390-0001	Hose bed light Unity. Locate at front area of hose bed. Switched with work light switch in cab.	1
5390-0022	Crosslay light Truck-Lite. Locate to rear of crosslay (SM) and forward of crosslay (TM as applicable). Switched with work light switch in cab.	1
LIGHTS - NON-WARNING		
5400-0003	Engine compartment light (EA).	1
5400-0010	Incandescent pump compartment light (EA).	1
5400-0031	Pair of Cab Dome Large Lights mounted driver and officer side front. N/A on E-One Chassis. Required on Comm Chassis.	1
5400-0123	Side mount pump module incandescent lighting. Includes (3) pump panel lights - (2) driver side and (1) officer side.	1
MISC ELECTRICAL		
5110-0017	Back-up alarm 97 dB.	1
HAND TOOLS		
7600-0005	Pike Pole Fiberglass 6'.	1
7600-0007	Pike Pole Fiberglass 10'.	1
HOSE / NOZZLES		
7700-0004	Hard suction hose 6" with Pyrolite couplings.	2
GROUND LADDERS		
7800-0007	Alco-Lite PRL-14' roof ladder.	1
7800-0016	Alco-Lite PEL-24' 2-section extension ladder.	1
7800-0032	Alco-Lite FL-10, 10' folding ladder w/safety shoes.	1
MISC LOOSE EQUIPMENT		
7900-0010	Chrome Barrel Strainer 6" NST.	1
7900-0014	DOT Required Drive Away Kit - Kit includes three (3) triangular warning reflectors with carrying case. This kit is for the end user and is to remain with the truck.	1
EXTERIOR PAINT		
8100-0089	All applicable pump/pre-connect application modules are to have a sanded finish (not painted job color). Includes upper and lower pump modules, crosswalk module	1

	and/or speedlay/pre-connect module (as applicable). Rear mounted body/pump module to be painted job color.		
8100-0116	Rear body surface to have a sanded finish (not painted job color). Includes hinged doors that do not have discrete sales codes and removable panels.	1	
8100-0182-000-17	Paint Body - Small - For Pumpers, Rear Mounts, S/A Tankers/Wetsides and Rescues. Sikkens paint. Color: FLNA3225E-1 Red.	1	
8100-0190-000-17	Freightliner cab paint. Paint color FLNA3225E-1 Red.	1	
STRIPING			
8300-0002-859-12	NFPA Scotchlite Stripe - 4" wide and straight on front/sides of cab and sides/rear of body. Color: White. Location: bottom of stripe flush with bottom of cab and straight back.	1	
8300-0042	White rubrail scotchlite insert.	1	
8300-0123-000-72	Chevron "A" style 6" printed pattern NFPA Scotchlite striping. Provided to driver and officer rear compartment face, smooth plate panels and/or doors outboard and above the center rear compartment opening and the vertical hosebed extrusions (terminate just above the upper handrail stanchion). The vertical and horizontal extrusions inboard of the vertical hosebed extrusions shall remain visible with a sanded finish. Colors to be Yellow/Red.	1	
WARRANTY / STANDARD & EXTENDED			
9100-0000	Standard 1 Year Warranty.	1	
9100-0004	10 Year/100,000 Mile Structural Warranty - Statement of Warranty.	1	
9100-0005	10 Year Stainless Steel Plumbing Warranty - Statement of Warranty.	1	
9100-0019	10 Year Limited Paint and Perforation Warranty - For Sikkens Paint.	1	
SUPPORT, DELIVERY, INSPECTIONS AND MANUALS			
9300-0009	Manuals, Operator and Service CD-ROM.	1	
9300-0036	Tradition drive away.	1	
PRICE	2013 E-ONE TRADITION PUMPER - FREIGHTLINER 2-DOOR CHASSIS		$186,654

STATE OF OHIO TERM SCHEDULE

4200 SURFACE RD
COLUMBUS, OH 43228

Quote No: 57474

3/18/2013

Quote Rev:4 Drawing Rev:2

Note: Hosebed height may not be the correct measurement for this combo. Compartment height may change.

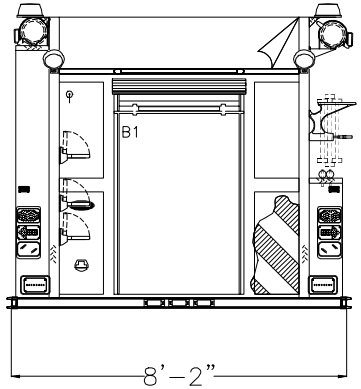

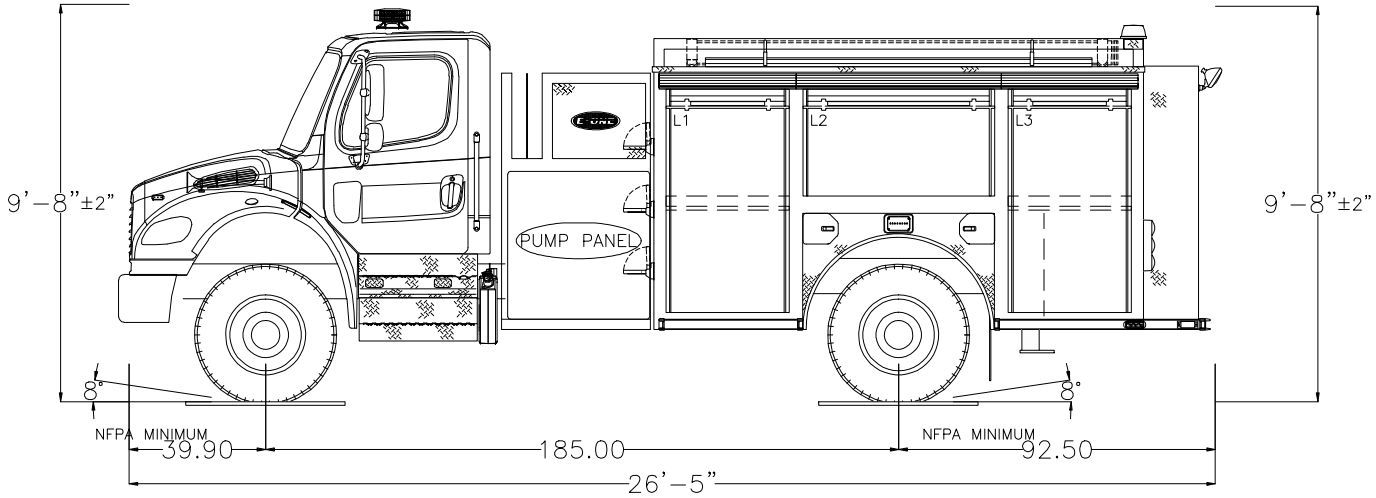

POWERED BY EZDRAW

Notice: This drawing provides a GENERAL REPRESENTATION of the vehicle configuration and should be used for evaluation purposes. The respective dimensions shown,including overall height and length, are estimates and may vary due to manufacturing processes. All other items such as lighting and fixtures, plumbing, compartmentation, and other generally assembled details are shown for REFERENCE ONLY and may not be a direct reflection of the final truck configuration. In ALL situations where this drawing may conflict with the specifications, THE SPECIFICATIONS, AS REFLECTED IN THE APPROVED SHOP ORDER, SHALL PREVAIL. Unless otherwise specified, the proposed apparatus will be manufactured to the latest NFPA recommendations as well as other applicable federally regulated safety regulations. E-One reserves the right to engineer and incorporate design improvements and changes without notice, while adhering to the intent of the specification.

HALE QFLO 1250 GPM PUMP
0 TOTAL TANK VOLUME

HOSE LOADS :

	OPENING		INTERIOR DIMENSIONS				
COMPT.	WIDTH	HEIGHT	LOWER WIDTH	LOWER HEIGHT	LOWER DEPTH	UPPER HEIGHT	UPPER DEPTH
L1	34	60.75	36	30	26	38.75	12
L2	54	26.75	56	30	N/A	26.75	12
L3	34	60.75	36	30	26	38.75	12
R1	34	22	36	30	26	0	N/A
R2	34	22	36	30	26	0	N/A
B1	36	45	38	30	26	24	14

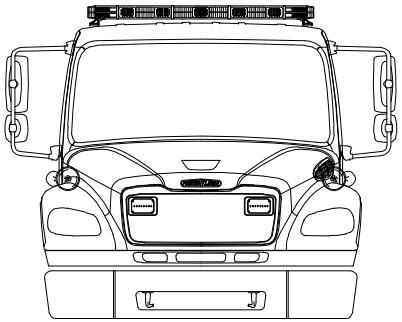

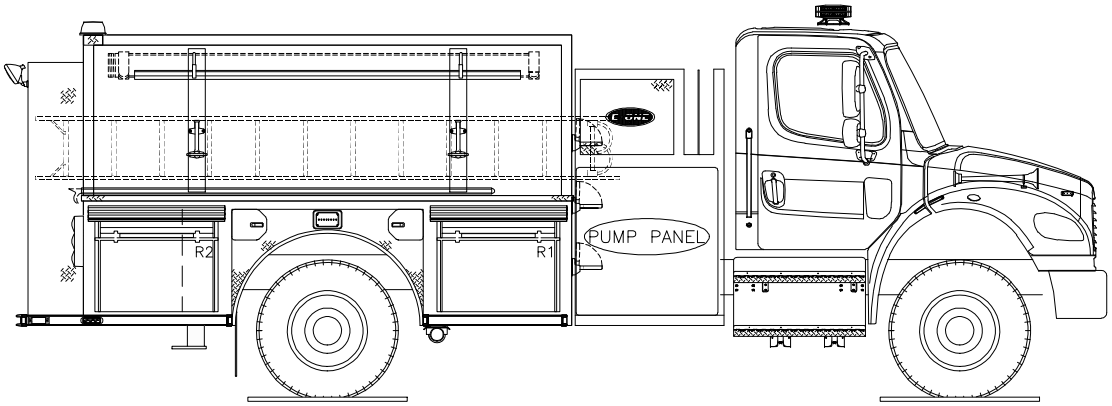

POWERED BY EZDRAW

Fire Apparatus Quotation for:
STATE OF OHIO TERM SCHEDULE

Quotation Number: 57475 Rev: 4

Unit Description: TDPM-COMM

Quote Description: Tradition Pumper, Commercial - International 2-door

Salescode	Extended Description	Qty
TESTING COMPLIANCE STANDARD		
1001-0015	The E-ONE supplied components of the vehicle shall meet the requirements of NFPA 1901, 2009 edition.	1
CHASSIS MODEL		
1005-0544	International 4400 (2) door, 185" WB & 41" frame cut, front tow hooks, 12K & 23K axles, ABS brakes, radiator cooling sized for current emissions requirements, 50 gal right hand fuel tank, EVS3000 transmission, (3) 1950CCA batteries, 320 alternator, ember separator and AC.	1
CHASSIS PREP		
1020-0011	Comm Chas Prep E-1 Supp-Non FL.	1
WHEEL OPTIONS		
1050-0036	International chassis rims painted job color. Tradition.	1
TIRE OPTIONS		
1060-0050	Tire pressure monitoring valve stem caps.	1
AIR SYSTEM OPTIONS		
1110-0010-277	Air inlet. To charge brake system. Commercial chassis only. Location: driver's door step area.	1
1110-0063	Dual Grover Hood Mounted Air Horns with Driver and Officer Foot Switches to be Supplied and Installed by International. Tradition	1
ENGINES & TRANSMISSIONS		
1200-0126	Chassis speed to be electronically limited and not to exceed a maximum of 68 MPH. Note: Speed rating may be lower based off OEM tire ratings provided on chassis.	1
1200-0261	International Maxx Force 315 HP 2010 EPA engine.	1
1200-0263	Exhaust Brake for use with International chassis.	1
CHASSIS OPTIONS		
1680-0011	Tow eyes rear below body, painted.	1

1680-0078	Tow hooks front. Not available with extended front bumper. Tow hooks are OEM supplied with chassis.	1
1680-0107	Diamond plate trim package for a (2) door International. Includes a full length driver side and an officer side trim that will utilize pieces already supplied by the OEM.	1
1680-0128	The commercial chassis to have seat belt and chassis pre-wiring for NFPA seating indicator and vehicle data recorder.	1
1680-0234-R02-P0	The fuel tank to be 50 gallons and located to the right hand side of cab.	1
1680-0235-R01	The batteries to be located under left hand side of cab.	1
CAB BADGE PACKAGE		
1610-0000	Cab and body to have applicable E-ONE logos.	1
MIRRORS		
1670-0029	International West Coast heated mirrors with clearance lights and remote control.	1
MISC EXTERIOR CAB OPTIONS		
1675-0007	Diesel fuel only label.	1
SEATS		
1510-0113	Seating Package Two (2) Door International. Includes One (1) Nat'l Brand Air Ride Driver and Two (2) Person Bench Seat.	1
1685-0030	Seating capacity tag of three occupants.	1
CAB ELECTRICAL OPTIONS		
1750-0059-277-04	Receptacle inlet 20 amp with a Yellow cover. Location: driver's door step area.	1
1750-0343	Battery charger E-ONE LPC 20. 120 volt inlet, 20 amp output.	1
BODY COMPT LEFT SIDE		
3100-0095	Driver side body with full height 36" wide forward and 36" wide rearward compartmentation. Includes (1) 56" wide compartment over the wheel well.	1
BODY COMPT RIGHT SIDE		
3120-0004	Officer half side body with 36" wide forward and 36" wide rearward compartmentation. Includes adjustable ladder tracks.	1
BODY COMPT REAR		
3110-0005	Full Height Rear Compartment. Includes smooth plate panels.	1
3340-0080	Bolt-on diamond plate 18" tailboard (full width of body). Includes (2) squared off beavertails (no stanchions) with removable outer panels and handrails- (2) vertically on trailing edge of body and horizontally mounted handrail(s) below hosebed.	1
DOORS		
3300-0017-004	Door roll up short (up to 45") with satin finish ROM. Location(s): L2.	1
3300-0017-015	Door roll up short (up to 45") with satin finish ROM. Location(s): R1.	1

3300-0017-016	Door roll up short (up to 45") with satin finish ROM. Location(s): R2.	1
3300-0019-003	Door roll up tall (greater than 45") with satin finish ROM. Location(s): L1.	1
3300-0019-005	Door roll up tall (greater than 45") with satin finish ROM. Location(s): L3.	1
3300-0019-027	Door roll up tall (greater than 45") with satin finish ROM. Location(s): B1.	1
SHELVES		
3370-0025-099	Permanent shelf. Locate in L1 at offset (above extrusion if applicable).	1
3370-0025-100	Permanent shelf. Locate in L3 at offset (above extrusion if applicable).	1
COVERS		
3305-0007-000-13	Vinyl Black hose bed cover with attached rear flap(s).	1
3305-0008-000-13	Vinyl Black crosslay cover with attached side flaps.	1
PUMP MODULE		
3130-0166	Pump Module to be 72" wide (side to side). Includes upper, lower, crosswalk, speedlay and tranverse module(s) if applicable.	1
3130-0192	Side Mount Pump Module. Includes area for single stacked double crosslay (notched divider).	1
PUMP PANELS		
3134-0011	Officer side pump panel to be vertically hinged on forward extrusion. Panel(s) to be secured in the closed position with push button latches. Upper panel to be held open with gas shock.	1
3134-0016	Stainless steel driver and officer side pump panels.	1
3134-0050	The gauge panel is to swing downward/forward for access to electrical connections on panel. Includes two (2) cable hold opens, and push button latches.	1
MISC PUMP PANEL OPTIONS		
4460-0003	Pump panel tags color coded per NFPA compliance.	1
PUMP MODULE OPTIONS		
3136-0041	Module mainframe for use with International chassis.	1
3136-0058	E-ONE logo mounted one each side on pump module/preconnect panels. Logos to be sized as applicable to available space on panels.	1
WATER TANK		
4010-0178	1030 Gallon "T" Water Tank. UPF Poly III color fill towers. Note: Any foam cell(s) and/or storage options through the tank will reduce the overall water capacity.	1
TANK PLUMBING		
4450-0010	2" tank fill Akron manual valve.	1
4450-0119	3" tank to pump Akron manual valve w/4" plumbing.	1
LADDER STORAGE / RACKS		
3365-0018	Hold down brackets to secure a 2-section extension and roof ladder.	1
3365-0025-515	Attic ladder mounting brackets (PR). Locate officer side compartment top.	1

3365-0028	Hard Suction Storage Rack. Driver side compartment top. Includes spring hold downs and scuff plates behind spring mounts (as applicable).	1
3365-0031	Hard Suction Storage Rack. Officer side in adjustable track above ladders (if applicable). Includes spring hold downs and scuff plates.	1
3365-0034-515	(2) aluminum pike pole storage tubes. Locate officer side compartment top.	1
3365-0049	Brand of ladders capable of being carried on unit to be Alco-Lite.	1
3365-0086-B99	The pike pole(s) capable of being stored are to be the following length: (2) 10' pike poles.	1
3365-0087-C57	The length of ladders capable of being stored shall be the following: 24' 2-section and 14' roof ladder.	1
3365-0168	Pike pole tube secondary retaining pin(s) with cable. Locate on end of pike pole tube(s).	1
HANDRAILS / STEPS		
3330-0103	Dual lighted LED folding steps rear NFPA. Includes folding steps on driver side (staggered stepped as applicable with tailboard depth) for NFPA hosebed access and handrail mounted on driver side upper hosebed side (as applicable).	1
3330-0105-060	Dual lighted LED folding step. Location: officer side front compartment face. Each location requires a minimum of (1) handrail per NFPA.	1
3330-0105-062	Dual lighted LED folding step. Location: driver side front compartment face. Each location requires a minimum of (1) handrail per NFPA.	3
MISC BODY OPTIONS		
3090-0002	The unit has no overall height restrictions.	1
3090-0004	The unit has no overall length restrictions.	1
3090-0007	The hose bed is to have NFPA capacity.	1
3340-0004	Hosebed above the booster tank. Includes forward hosebed and tower(s) cover plate work (as applicable). Hosebed adjustable divider extrusion rearward of the furthest tower is to run full width of the hosebed (as is practical with other hosebed mounted equipment).	1
3340-0015	Diamond plate single axle wheel well. Includes bolt-on composite wheel well liners and aluminum trim fenderettes.	1
3340-0035	Divider Long. To run full length of hose bed (front to rear).	1
3340-0074	Body mainframe and hosebed side assemblies for a 85" high body.	1
3340-0093	Mud flaps, rear, black with E-ONE logo.	1
3340-0110	The rear of each hose bed divider to have a hand hold cut-out(s).	1
3340-0128	Bolt-in partition walls. Locate in lower rear compartment transverse area. Partitions to separate the side rear compartments from the rear compartment.	1
3340-0145	Rubrail for the body and pump area module(s).	1
SCBA BOTTLE STORAGE		
3320-0020	SCBA Bottle Storage. (4) Fire Shopp SCBA bottle storage with hinged doors with push button latches. (2) officer side and (2) driver side in wheel well area.	1

PUMPS		
4005-0030	Rating 1250 GPM	1
4005-0054	Hale Qflo-23L 1250 pump. Tradition.	1
PUMP CERTIFICATION		
4475-0000	Pump certification 750-2250 GPM	1
PUMP OPTIONS		
4015-0053-198	Steamers to be Flush + 1". Location: driver's side.	1
4015-0053-199	Steamers to be Flush + 1". Location: officer's side.	1
4015-0101	Pump cooler, 1/4" valve with 3/8" tubing.	1
INTAKES		
4440-0005	2.5" Left Intake Akron Manual Valve.	1
INTAKE OPTIONS		
4445-0016	Intake relief valve, Hale 2.5".	1
DISCHARGES AND PRECONNECTS		
4415-0012-654	1.5" crosslay with Akron manual valve. Location: crosslay 1 & 2.	2
4415-0022-350	2.5" Left Rear Discharge Akron Manual Valve. Location: left rear discharge.	1
4415-0041	3" Deck Gun Discharge, Akron manual valve.	1
4415-0161-581	2.5" Left Panel Discharge Akron Manual Valve w/30 Degree Droop. Location: left side discharge 1.	1
4415-0161-582	2.5" Left Panel Discharge Akron Manual Valve w/30 Degree Droop. Location: left side discharge 2.	1
4415-0164-583	2.5" Right Panel Discharge Akron Manual Valve w/30 Degree Droop. Location: right side discharge 1.	1
4417-0106-L88	Deck gun piping to be positioned centered in deck gun channel or centered and offset forward in dunnage area (as applicable to upper module area design).	1
DISCHARGE OPTIONS		
4417-0058-350	Bleeder drain valve plumbed to: left rear discharge.	1
4417-0058-573	Bleeder drain valve plumbed to: crosslay preconnect.	2
4417-0058-575	Bleeder drain valve plumbed to: left discharge.	2
4417-0058-576	Bleeder drain valve plumbed to: right discharge.	1
4417-0101-356	Automatic drain valve. For: deck gun.	1
PRESSURE GOVERNORS		
4465-0005	Class 1 Captain pressure governor.	1
GAUGES		
4435-0001	Class 1 Intelli-Tank water tank level gauge.	1
4435-0013	4.5" Class 1 compound pressure gauge (30-0-600 PSI).	2

4435-0015-350	2.5" Class 1 compound pressure gauge (30-0-600). Discharge(s): left rear discharge.	1
4435-0015-352	2.5" Class 1 compound pressure gauge (30-0-600). Discharge(s): 1.5 in. crosslay preconnect.	2
4435-0015-356	2.5" Class 1 compound pressure gauge (30-0-600). Discharge(s): deck gun.	1
4435-0015-581	2.5" Class 1 compound pressure gauge (30-0-600). Discharge(s): left side discharge 1.	1
4435-0015-582	2.5" Class 1 compound pressure gauge (30-0-600). Discharge(s): left side discharge 2.	1
4435-0015-583	2.5" Class 1 compound pressure gauge (30-0-600). Discharge(s): right side discharge 1.	1
4435-0069	Class 1 ENFO IV system on pump operator's panel.	1
ELECTRICAL SYSTEMS		
5010-0014-E12	Vehicle data recorder for commercial cab - 2009 NFPA compliant. Includes occupant detection with display. Display location: outboard on driver's side overhead console.	1
5010-0036	V-MUX Electrical system for pumper / tanker / rescue.	1
5010-0059-339	VFD Text display for V-MUX electrical system. Location: center of dash.	1
LIGHT BARS		
5300-0053	Light bar Whelen Freedom model FN66QLED 66" with MKEZ7 mounts. All LED light bar without rear facing LEDs. Location: Centered on the front cab roof.	1
WARNING LIGHT PACKAGES		
5550-0128-535	Whelen Super LED lower level warning light package. Includes (6) red 600 LED light heads, (2) red LIN3 lights and (2) red 500 LED light heads w/chrome flanges. Locate side facing lights: at forward most position, centered in rear wheel well, and side facing at rear of body in rubrail if equipped.	1
WARNING LIGHTS		
5600-0078-479-06	Whelen Super LED beacon (PR) model L31H with Red domes. Location rear upper body on aerial style brackets.	1
5600-0149-170	Hazard (door ajar) light, 2.5" incandescent. Location: center overhead.	1
SIRENS		
5500-0009	Federal PA300 electronic siren recessed mounted.	1
5500-0024-170	The electronic siren control is to be located on the center overhead.	1
SPEAKERS		
5510-0028	Speaker Federal Dynamax ES100. Located Officer's side behind Tow hook. Navistar 4400 chassis only with '07 engine.	1
DOT LIGHTING		
5150-0007	Whelen 600 series LED vertical mount tail lights. Includes LED stop/tail, arrow turn and halogen back-up lights with vertical Cast 3 housing and weatherproof	1

	connectors.	
5150-0017	License plate light LED with chrome housing located at the rear of the body.	1
5150-0022	Marker light LED body package. Commercial pumper bodies only.	1
LIGHTS - COMPARTMENT, STEP & GROUND		
5380-0008	Compartment light package incandescent for small bodies.	1
5380-0027	Ground light package for cab and body - small.	1
LIGHTS - DECK AND SCENE		
5390-0000-395	Deck light - Unity 12 volt (PR). Location: rear body/beavertail area on the trailing edge up high.	1
5390-0001	Hose bed light Unity. Locate at front area of hose bed. Switched with work light switch in cab.	1
5390-0022	Crosslay light Truck-Lite. Locate to rear of crosslay (SM) and forward of crosslay (TM as applicable). Switched with work light switch in cab.	1
LIGHTS - NON-WARNING		
5400-0003	Engine compartment light (EA).	1
5400-0010	Incandescent pump compartment light (EA).	1
5400-0031	Pair of Cab Dome Large Lights mounted driver and officer side front. N/A on E-One Chassis. Required on Comm Chassis.	1
5400-0123	Side mount pump module incandescent lighting. Includes (3) pump panel lights - (2) driver side and (1) officer side.	1
MISC ELECTRICAL		
5110-0017	Back-up alarm 97 dB.	1
HAND TOOLS		
7600-0005	Pike Pole Fiberglass 6'.	1
7600-0007	Pike Pole Fiberglass 10'.	1
HOSE / NOZZLES		
7700-0004	Hard suction hose 6" with Pyrolite couplings.	2
GROUND LADDERS		
7800-0007	Alco-Lite PRL-14' roof ladder.	1
7800-0016	Alco-Lite PEL-24' 2-section extension ladder.	1
7800-0032	Alco-Lite FL-10, 10' folding ladder w/safety shoes.	1
MISC LOOSE EQUIPMENT		
7900-0010	Chrome Barrel Strainer 6" NST.	1
7900-0014	DOT Required Drive Away Kit - Kit includes three (3) triangular warning reflectors with carrying case. This kit is for the end user and is to remain with the truck.	1
EXTERIOR PAINT		
8100-0089	All applicable pump/pre-connect application modules are to have a sanded finish	1

	(not painted job color). Includes upper and lower pump modules, crosswalk module and/or speedlay/pre-connect module (as applicable). Rear mounted body/pump module to be painted job color.		
8100-0116	Rear body surface to have a sanded finish (not painted job color). Includes hinged doors that do not have discrete sales codes and removable panels.	1	
8100-0182-000-17	Paint Body - Small - For Pumpers, Rear Mounts, S/A Tankers/Wetsides and Rescues. Sikkens paint. Color: FLNA3225E-1 Red.	1	
8100-0191-000-17	International cab paint. Paint color FLNA3225E-1 Red.	1	
STRIPING			
8300-0002-859-12	NFPA Scotchlite Stripe - 4" wide and straight on front/sides of cab and sides/rear of body. Color: White. Location: bottom of stripe flush with bottom of cab and straight back.	1	
8300-0042	White rubrail scotchlite insert.	1	
8300-0123-000-72	Chevron "A" style 6" printed pattern NFPA Scotchlite striping. Provided to driver and officer rear compartment face, smooth plate panels and/or doors outboard and above the center rear compartment opening and the vertical hosebed extrusions (terminate just above the upper handrail stanchion). The vertical and horizontal extrusions inboard of the vertical hosebed extrusions shall remain visible with a sanded finish. Colors to be Yellow/Red.	1	
WARRANTY / STANDARD & EXTENDED			
9100-0000	Standard 1 Year Warranty.	1	
9100-0004	10 Year/100,000 Mile Structural Warranty - Statement of Warranty.	1	
9100-0005	10 Year Stainless Steel Plumbing Warranty - Statement of Warranty.	1	
9100-0019	10 Year Limited Paint and Perforation Warranty - For Sikkens Paint.	1	
SUPPORT, DELIVERY, INSPECTIONS AND MANUALS			
9300-0009	Manuals, Operator and Service CD-ROM.	1	
9300-0036	Tradition drive away.	1	
PRICE	2013 E-ONE TRADITION PUMPER - INTERNATIONAL 2DR CHASSIS		$188,447.

STATE OF OHIO TERM SCHEDULE

4200 SURFACE RD
COLUMBUS, OH 43228

Quote No: 57475

3/18/2013

Quote Rev:4 Drawing Rev:2

Note: Hosebed height may not be the correct measurement for this combo. Compartment height may change.

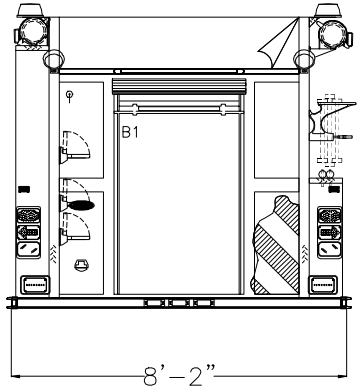

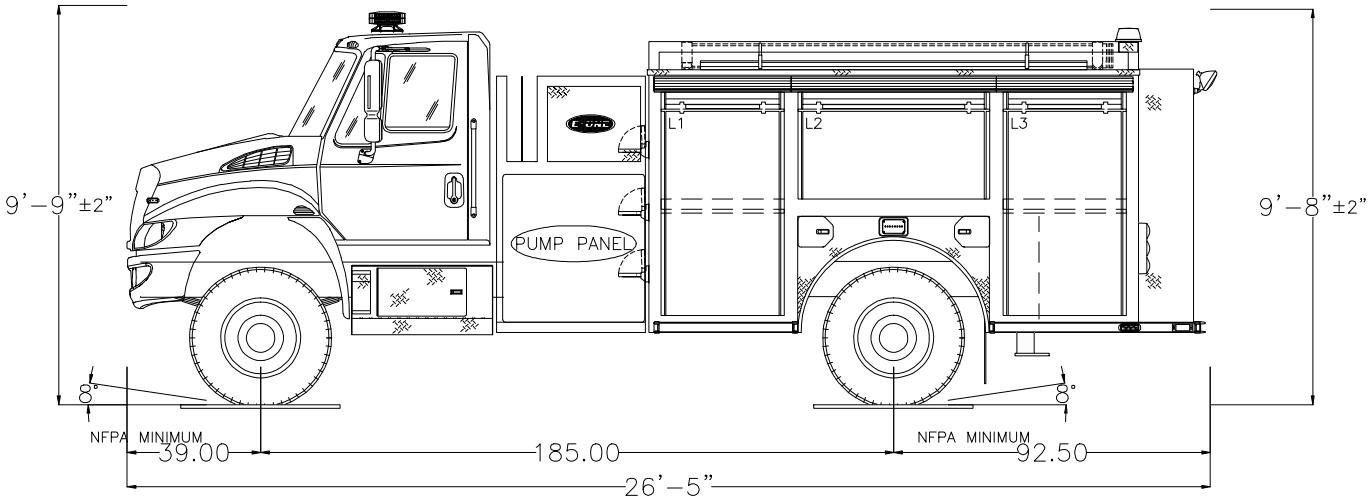

POWERED BY EZDRAW

Notice: This drawing provides a GENERAL REPRESENTATION of the vehicle configuration and should be used for evaluation purposes. The respective dimensions shown,including overall height and length, are estimates and may vary due to manufacturing processes. All other items such as lighting and fixtures, plumbing, compartmentation, and other generally assembled details are shown for REFERENCE ONLY and may not be a direct reflection of the final truck configuration. In ALL situations where this drawing may conflict with the specifications, THE SPECIFICATIONS, AS REFLECTED IN THE APPROVED SHOP ORDER, SHALL PREVAIL. Unless otherwise specified, the proposed apparatus will be manufactured to the latest NFPA recommendations as well as other applicable federally regulated safety regulations. E-One reserves the right to engineer and incorporate design improvements and changes without notice, while adhering to the intent of the specification.

HALE QFLO 1250 GPM PUMP 0 TOTAL TANK VOLUME	HOSE LOADS :

	OPENING		INTERIOR DIMENSIONS				
COMPT.	WIDTH	HEIGHT	LOWER WIDTH	LOWER HEIGHT	LOWER DEPTH	UPPER HEIGHT	UPPER DEPTH
L1	34	60.75	36	30	26	38.75	12
L2	54	26.75	56	30	N/A	26.75	12
L3	34	60.75	36	30	26	38.75	12
R1	34	22	36	30	26	0	N/A
R2	34	22	36	30	26	0	N/A
B1	36	45	38	30	26	24	14

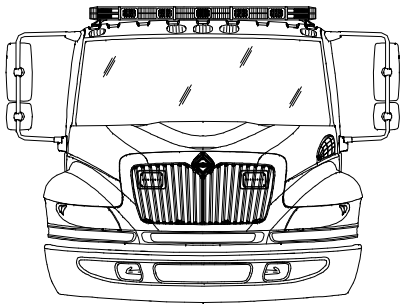

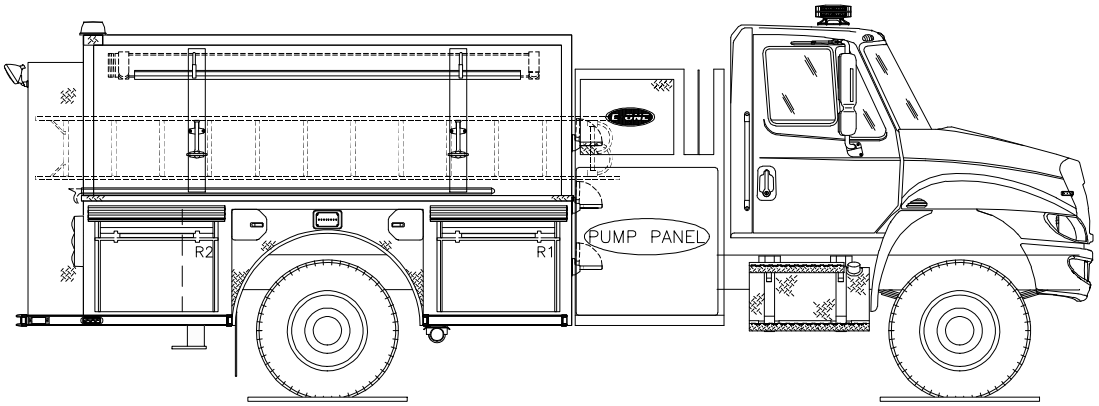

POWERED BY EZDRAW

Fire Apparatus Quotation for:
STATE OF OHIO TERM SCHEDULE

Quotation Number: 57476 Rev: 5

Unit Description: TDPM-TYPH

Quote Description: Tradition Pumper - E-One Typhoon Custom Chassis

Salescode	Extended Description	Qty
TESTING COMPLIANCE STANDARD		
1001-0015	The E-ONE supplied components of the vehicle shall meet the requirements of NFPA 1901, 2009 edition.	1
BUMPERS		
1160-0000	Bumper 10" stainless steel.	1
1160-0011	4" Front Bumper Extension.	1
FRAME ASSEMBLY		
1250-0015	Frame assembly to include 176" wheelbase and 41" framecut.	1
AXLE OPTIONS		
1025-0004	Meritor FL941 front axle 18,000 lb.	1
1025-0016	Meritor RS-24-160 single rear axle 24,000 lb. capacity.	1
1025-0029	Front shock absorbers.	1
SUSPENSIONS		
1070-0001	Rear suspension springs rated equal to the capacity of the axle.	1
WHEEL OPTIONS		
1050-0000	Steel wheels for front axle (2).	1
1050-0002	Steel wheels for rear axle (4).	1
TIRE OPTIONS		
1060-0001	Two Michelin 315 tires model XZA-1 for front axle.	1
1060-0015	Four Michelin 11R rear tires with XDN2 mud and snow tread.	1
1060-0050	Tire pressure monitoring valve stem caps.	1
BRAKE SYSTEMS		
1100-0000	16-1/2" x 6" S-cam brakes with ArvinMeritor automatic slack adjusters for front axle.	1
1100-0002	ArvinMeritor 16-1/2" x 7" S-cam brakes with cast brake drums for a single rear axle.	1

1100-0005	Brake system air 4X2/4X4.	1
1100-0006	Parking brake release mounted on the driver's side lower dash.	1
AIR SYSTEM OPTIONS		
1110-0000-001	Inlet for air system. Location: driver door jamb.	1
1110-0002	Air dryer Bendix AD-9.	1
1110-0006	Air lines nylon.	1
1110-0041	Air horns Grover recessed in bumper (PR).	1
ENGINES & TRANSMISSIONS		
1200-0017	Push-button transmission shift selector.	1
1200-0020	TransSynd synthetic transmission fluid for EVS3000.	1
1200-0097	Electronically limited speed to 68 MPH maximum. Note: Max speed may be set at 65 MPH due to tire rating.	1
1200-0233	Eng/Trans Cummins ISL 330HP/EVS3000 2013 EPA compliant engine.	1
SECONDARY BRAKING		
1125-0002	Jacobs engine compression brake.	1
COOLING PACKAGE		
1800-0013	Cooling system for use with Cyclone II X, Typhoon X, and Quest chassis. For use with 2010/2013 EPA engines. Includes coolant recovery system.	1
FUEL SYSTEMS		
1350-0003	Fuel system 50 gallon.	1
1350-0022	Fuel line hose rubber.	1
ALTERNATOR		
1700-0003	Alternator Leece Neville 270 amp SAE, 240 amp NFPA rating.	1
BATTERIES		
1400-0002	Battery four group 31 1000 CCA.	1
CHASSIS OPTIONS		
1680-0005	Thermatic fan clutch.	1
1680-0006	Drivelines 1710.	1
1680-0011	Tow eyes rear below body, painted.	1
1680-0042	Tow hooks front painted in the down position.	1
1680-0250-M58	Diesel Exhaust Fluid (DEF) 5 gallon tank for 2013 EPA engines. Location: left side below rear of cab.	1
CAB MODEL		
1520-0013	Typhoon X medium cab with 58" CA	1

CAB ROOF TYPE		
1615-0010	Cab roof to be "flat" (non-vista).	1
CAB BADGE PACKAGE		
1610-0000	Cab and body to have applicable E-ONE logos.	1
GRILLE		
1620-0004	ABS chrome plated grille.	1
CAB DOOR OPTIONS		
1550-0003	Rear crew cab doors in the medium position.	1
1550-0005	Driver and officer cab door windows. Include forward vent windows.	1
1550-0011	Rear crew cab door windows. Includes manual roll-down actuation. Not available with paddle style door latching.	1
1550-0016	Cab door panels ABS.	1
1550-0025	All cab doors shall have "L" style exterior latches.	1
1550-0027	Front cab door windows to manually roll down.	1
1550-0037-659	(4) Incandescent cab step area lighting. Locate each light in on each cab door in the inboard position. Lights to be switched with door ajar.	1
1550-0044	All cab door kick plates to be made from diamond plate aluminum.	1
1550-0059-000-72	Reflective Yellow/Red striping positioned in the "A" formation located in the lower cab door panels.	1
1550-0077	Interior cab door locks - manual. Will be individually actuated from each respective door. Includes barrel style key lock on each exterior cab door.	1
1550-0084	All cab exterior access doors to have 1250 keyed locks.	1
MIRRORS		
1670-0003	Velvac 2010 mirrors. Door mounted west coast style with remote control and heat.	1
MISC EXTERIOR CAB OPTIONS		
1550-0020	Windows cab side fixed driver's side.	1
1550-0033	Windows cab side fixed officer's side.	1
1675-0022	Pair of 18" handrails located just behind driver and officer front door one each side.	1
1675-0023	Pair of 18" handrails located just behind driver and officer rear door (ALS doors if equipped) one each side.	1
1675-0030	Mud flaps, front, black with E-ONE logo.	1
1675-0047	Rear cab wall to be 3/16" aluminum diamond plate.	1
HVAC		
1515-0017	Air conditioning for the Typhoon X, CII X and Quest with Cummins ISC/ISL engine, radiator mounted condenser.	1
1685-0057	Heaters rear with covers (PR), and front heater with heat to the feet for the driver and officer.	1

SEATS		
1510-0003	Seats, Inc. brand 911 cab seats.	1
1510-0007	Seat cover material vinyl.	1
1510-0008	Seat color gray.	1
1510-0035-147	Universal air pack bottle bracket (EA). Location: officer's seat.	1
1510-0035-148	Universal air pack bottle bracket (EA). Location: rear facing driver's side.	1
1510-0035-215	Universal air pack bottle bracket (EA). Location: rear facing officer's side.	1
1510-0038	Driver seat 911 air ride.	1
1510-0042	Officer seat to be 911 fixed SCBA.	1
1510-0050	Rear facing 911 seat with SCBA driver's side.	1
1510-0053	Rear facing 911 seat with SCBA officer's side.	1
1685-0031	Seating capacity tag of four occupants.	1
MISC INTERIOR CAB OPTIONS		
1685-0000	Cab interior gray. Does not include engine cover or seat color.	1
1685-0005	Lexan sun visors, driver and officer's side overhead.	1
1685-0168	ABS Dash package. Includes center and officer side dash, lower kick panels and "A" post covers.	1
1685-0187	Severe duty engine cover, molded polyurethane.	1
CAB ELECTRICAL OPTIONS		
1750-0013-172	Turn signal Whelen 600 LED amber arrow pair located upper headlight bezel.	1
1750-0029	Switch horn button two position DOT/air horn.	1
1750-0046-195	Cab Headlights. Position: lower.	1
1750-0059-179-04	Receptacle inlet 20 amp with a Yellow cover. Location: outside driver's door next to handrail.	1
1750-0072-593	12 VDC (or 24VDC) electrical outlet in the cab wired battery hot. Location: officer side dash.	2
1750-0075	English dominant main cab gauge cluster.	1
1750-0188	DPF regeneration override switch.	1
1750-0198-A31	Battery charger to be located behind driver's seat.	1
1750-0343	Battery charger E-ONE LPC 20. 120 volt inlet, 20 amp output.	1
5400-0037	Dome Lts Red/White Incandescent. Package includes two lights mounted in the front and two mounted in the rear of the cab. White light wire through door and light assembly mounted switch. Red light through light assembly mounted switch.	1
BODY COMPT LEFT SIDE		
3100-0095	Driver side body with full height 36" wide forward and 36" wide rearward compartmentation. Includes (1) 56" wide compartment over the wheel well.	1
BODY COMPT RIGHT SIDE		

3120-0004	Officer half side body with 36" wide forward and 36" wide rearward compartmentation. Includes adjustable ladder tracks.	1
BODY COMPT REAR		
3110-0005	Full Height Rear Compartment. Includes smooth plate panels.	1
3340-0080	Bolt-on diamond plate 18" tailboard (full width of body). Includes (2) squared off beavertails (no stanchions) with removable outer panels and handrails- (2) vertically on trailing edge of body and horizontally mounted handrail(s) below hosebed.	1
DOORS		
3300-0017-004	Door roll up short (up to 45") with satin finish ROM. Location(s): L2.	1
3300-0017-015	Door roll up short (up to 45") with satin finish ROM. Location(s): R1.	1
3300-0017-016	Door roll up short (up to 45") with satin finish ROM. Location(s): R2.	1
3300-0019-003	Door roll up tall (greater than 45") with satin finish ROM. Location(s): L1.	1
3300-0019-005	Door roll up tall (greater than 45") with satin finish ROM. Location(s): L3.	1
3300-0019-027	Door roll up tall (greater than 45") with satin finish ROM. Location(s): B1.	1
SHELVES		
3370-0025-099	Permanent shelf. Locate in L1 at offset (above extrusion if applicable).	1
3370-0025-100	Permanent shelf. Locate in L3 at offset (above extrusion if applicable).	1
COVERS		
3305-0007-000-02	Vinyl Red hose bed cover with attached rear flap(s).	1
3305-0008-000-02	Vinyl Red crosslay cover with attached side flaps.	1
PUMP MODULE		
3130-0166	Pump Module to be 72" wide (side to side). Includes upper, lower, crosswalk, speedlay and tranverse module(s) if applicable.	1
3130-0192	Side Mount Pump Module. Includes area for single stacked double crosslay (notched divider).	1
PUMP PANELS		
3134-0011	Officer side pump panel to be vertically hinged on forward extrusion. Panel(s) to be secured in the closed position with push button latches. Upper panel to be held open with gas shock.	1
3134-0016	Stainless steel driver and officer side pump panels.	1
3134-0050	The gauge panel is to swing downward/forward for access to electrical connections on panel. Includes two (2) cable hold opens, and push button latches.	1
MISC PUMP PANEL OPTIONS		
4460-0003	Pump panel tags color coded per NFPA compliance.	1
4460-0034	Cab jack access door. Located on officer side pump panel in upper rearward area. Includes twist and turn latch.	1

PUMP MODULE OPTIONS		
3136-0040	Module mainframe for use with Typhoon chassis.	1
3136-0058	E-ONE logo mounted one each side on pump module/preconnect panels. Logos to be sized as applicable to available space on panels.	1
WATER TANK		
4010-0178	1030 Gallon "T" Water Tank. UPF Poly III color fill towers. Note: Any foam cell(s) and/or storage options through the tank will reduce the overall water capacity.	1
TANK PLUMBING		
4450-0010	2" tank fill Akron manual valve.	1
4450-0119	3" tank to pump Akron manual valve w/4" plumbing.	1
LADDER STORAGE / RACKS		
3365-0018	Hold down brackets to secure a 2-section extension and roof ladder.	1
3365-0025-515	Attic ladder mounting brackets (PR). Locate officer side compartment top.	1
3365-0028	Hard Suction Storage Rack. Driver side compartment top. Includes spring hold downs and scuff plates behind spring mounts (as applicable).	1
3365-0031	Hard Suction Storage Rack. Officer side in adjustable track above ladders (if applicable). Includes spring hold downs and scuff plates.	1
3365-0034-515	(2) aluminum pike pole storage tubes. Locate officer side compartment top.	1
3365-0049	Brand of ladders capable of being carried on unit to be Alco-Lite.	1
3365-0086-B99	The pike pole(s) capable of being stored are to be the following length: (2) 10' pike poles.	1
3365-0087-C57	The length of ladders capable of being stored shall be the following: 24' 2-section and 14' roof ladder.	1
3365-0168	Pike pole tube secondary retaining pin(s) with cable. Locate on end of pike pole tube(s).	1
HANDRAILS / STEPS		
3330-0103	Dual lighted LED folding steps rear NFPA. Includes folding steps on driver side (staggered stepped as applicable with tailboard depth) for NFPA hosebed access and handrail mounted on driver side upper hosebed side (as applicable).	1
3330-0105-060	Dual lighted LED folding step. Location: officer side front compartment face. Each location requires a minimum of (1) handrail per NFPA.	1
3330-0105-062	Dual lighted LED folding step. Location: driver side front compartment face. Each location requires a minimum of (1) handrail per NFPA.	3
MISC BODY OPTIONS		
3090-0002	The unit has no overall height restrictions.	1
3090-0004	The unit has no overall length restrictions.	1
3090-0007	The hose bed is to have NFPA capacity.	1
3340-0004	Hosebed above the booster tank. Includes forward hosebed and tower(s) cover plate work (as applicable). Hosebed adjustable divider extrusion rearward of the	1

	furthest tower is to run full width of the hosebed (as is practical with other hosebed mounted equipment).	
3340-0015	Diamond plate single axle wheel well. Includes bolt-on composite wheel well liners and aluminum trim fenderettes.	1
3340-0035	Divider Long. To run full length of hose bed (front to rear).	1
3340-0058	Recessed fuel fill driver side wheel well.	1
3340-0074	Body mainframe and hosebed side assemblies for a 85" high body.	1
3340-0093	Mud flaps, rear, black with E-ONE logo.	1
3340-0110	The rear of each hose bed divider to have a hand hold cut-out(s).	1
3340-0128	Bolt-in partition walls. Locate in lower rear compartment transverse area. Partitions to separate the side rear compartments from the rear compartment.	1
3340-0145	Rubrail for the body and pump area module(s).	1
SCBA BOTTLE STORAGE		
3320-0020	SCBA Bottle Storage. (4) Fire Shopp SCBA bottle storage with hinged doors with push button latches. (2) officer side and (2) driver side in wheel well area.	1
PUMPS		
4005-0030	Rating 1250 GPM	1
4005-0054	Hale Qflo-23L 1250 pump. Tradition.	1
PUMP CERTIFICATION		
4475-0000	Pump certification 750-2250 GPM	1
PUMP OPTIONS		
4015-0053-198	Steamers to be Flush + 1". Location: driver's side.	1
4015-0053-199	Steamers to be Flush + 1". Location: officer's side.	1
4015-0101	Pump cooler, 1/4" valve with 3/8" tubing.	1
INTAKES		
4440-0005	2.5" Left Intake Akron Manual Valve.	1
INTAKE OPTIONS		
4445-0016	Intake relief valve, Hale 2.5".	1
DISCHARGES AND PRECONNECTS		
4415-0012-654	1.5" crosslay with Akron manual valve. Location: crosslay 1 & 2.	2
4415-0022-350	2.5" Left Rear Discharge Akron Manual Valve. Location: left rear discharge.	1
4415-0041	3" Deck Gun Discharge, Akron manual valve.	1
4415-0161-581	2.5" Left Panel Discharge Akron Manual Valve w/30 Degree Droop. Location: left side discharge 1.	1
4415-0161-582	2.5" Left Panel Discharge Akron Manual Valve w/30 Degree Droop. Location: left side discharge 2.	1
4415-0164-583	2.5" Right Panel Discharge Akron Manual Valve w/30 Degree Droop. Location: right	1

	side discharge 1.	
4417-0106-L88	Deck gun piping to be positioned centered in deck gun channel or centered and offset forward in dunnage area (as applicable to upper module area design).	1
DISCHARGE OPTIONS		
4417-0058-350	Bleeder drain valve plumbed to: left rear discharge.	1
4417-0058-573	Bleeder drain valve plumbed to: crosslay preconnect.	2
4417-0058-575	Bleeder drain valve plumbed to: left discharge.	2
4417-0058-576	Bleeder drain valve plumbed to: right discharge.	1
4417-0101-356	Automatic drain valve. For: deck gun.	1
PRESSURE GOVERNORS		
4465-0005	Class 1 Captain pressure governor.	1
GAUGES		
4435-0001	Class 1 Intelli-Tank water tank level gauge.	1
4435-0013	4.5" Class 1 compound pressure gauge (30-0-600 PSI).	2
4435-0015-350	2.5" Class 1 compound pressure gauge (30-0-600). Discharge(s): left rear discharge.	1
4435-0015-352	2.5" Class 1 compound pressure gauge (30-0-600). Discharge(s): 1.5 in. crosslay preconnect.	2
4435-0015-356	2.5" Class 1 compound pressure gauge (30-0-600). Discharge(s): deck gun.	1
4435-0015-581	2.5" Class 1 compound pressure gauge (30-0-600). Discharge(s): left side discharge 1.	1
4435-0015-582	2.5" Class 1 compound pressure gauge (30-0-600). Discharge(s): left side discharge 2.	1
4435-0015-583	2.5" Class 1 compound pressure gauge (30-0-600). Discharge(s): right side discharge 1.	1
4435-0069	Class 1 ENFO IV system on pump operator's panel.	1
ELECTRICAL SYSTEMS		
5010-0013-E91	Vehicle data recorder - 2009 NFPA compliant. Includes occupant detection with display. Display location: Driver side of center dash electrical cover.	1
5010-0036	V-MUX Electrical system for pumper / tanker / rescue.	1
5010-0059-339	VFD Text display for V-MUX electrical system. Location: center of dash.	1
LIGHT BARS		
5300-0055	Light bar Whelen Freedom model FN72QLED 72" LED with MKEZ7 mounts and clear lenses. Location: Centered on the front cab roof.	1
WARNING LIGHT PACKAGES		
5550-0059-535	Whelen Super LED lower level warning light package. Includes (8) red 600 LED light heads and (2) red 500 LED light heads w/chrome flanges. Locate side facing lights: at forward most position, centered in rear wheel well, and side facing at rear of body in rubrail if equipped.	1

WARNING LIGHTS		
5600-0078-479-06	Whelen Super LED beacon (PR) model L31H with Red domes. Location rear upper body on aerial style brackets.	1
5600-0149-170	Hazard (door ajar) light, 2.5" incandescent. Location: center overhead.	1
SIRENS		
5500-0009	Federal PA300 electronic siren recessed mounted.	1
5500-0024-170	The electronic siren control is to be located on the center overhead.	1
SPEAKERS		
5510-0029-209	Speaker, Federal Signal Dynamax ES100 with "E-ONE" grille through bumper. Location: driver side front bumper.	1
DOT LIGHTING		
5150-0007	Whelen 600 series LED vertical mount tail lights. Includes LED stop/tail, arrow turn and halogen back-up lights with vertical Cast 3 housing and weatherproof connectors.	1
5150-0017	License plate light LED with chrome housing located at the rear of the body.	1
5150-0025	Marker light LED body/cab package. E-One custom cab and pumper or tanker body only.	1
LIGHTS - COMPARTMENT, STEP & GROUND		
5380-0008	Compartment light package incandescent for small bodies.	1
5380-0027	Ground light package for cab and body - small.	1
LIGHTS - DECK AND SCENE		
5390-0000-395	Deck light - Unity 12 volt (PR). Location: rear body/beavertail area on the trailing edge up high.	1
5390-0001	Hose bed light Unity. Locate at front area of hose bed. Switched with work light switch in cab.	1
5390-0022	Crosslay light Truck-Lite. Locate to rear of crosslay (SM) and forward of crosslay (TM as applicable). Switched with work light switch in cab.	1
LIGHTS - NON-WARNING		
5400-0003	Engine compartment light (EA).	1
5400-0010	Incandescent pump compartment light (EA).	1
5400-0039	Spotlight Specialty 2150 hand held located on officer's side of cab dash - hardwired.	1
5400-0123	Side mount pump module incandescent lighting. Includes (3) pump panel lights - (2) driver side and (1) officer side.	1
CONTROLS / SWITCHES		
5100-0000-199	Foot switch to control air horns located officer's side.	1
5100-0007-198	Foot switch to control electronic siren located driver's side.	1
MISC ELECTRICAL		

5110-0017	Back-up alarm 97 dB.	1
HAND TOOLS		
7600-0005	Pike Pole Fiberglass 6'.	1
7600-0007	Pike Pole Fiberglass 10'.	1
HOSE / NOZZLES		
7700-0004	Hard suction hose 6" with Pyrolite couplings.	2
GROUND LADDERS		
7800-0007	Alco-Lite PRL-14' roof ladder.	1
7800-0016	Alco-Lite PEL-24' 2-section extension ladder.	1
7800-0032	Alco-Lite FL-10, 10' folding ladder w/safety shoes.	1
MISC LOOSE EQUIPMENT		
7900-0010	Chrome Barrel Strainer 6" NST.	1
7900-0014	DOT Required Drive Away Kit - Kit includes three (3) triangular warning reflectors with carrying case. This kit is for the end user and is to remain with the truck.	1
EXTERIOR PAINT		
8100-0089	All applicable pump/pre-connect application modules are to have a sanded finish (not painted job color). Includes upper and lower pump modules, crosswalk module and/or speedlay/pre-connect module (as applicable). Rear mounted body/pump module to be painted job color.	1
8100-0116	Rear body surface to have a sanded finish (not painted job color). Includes hinged doors that do not have discrete sales codes and removable panels.	1
8100-0176-000-17	Paint E-ONE chassis cab - Sikkens paint. Color: FLNA3225E-1 Red.	1
8100-0182-000-17	Paint Body - Small - For Pumpers, Rear Mounts, S/A Tankers/Wetsides and Rescues. Sikkens paint. Color: FLNA3225E-1 Red.	1
8100-0186-000-39	Paint exterior surface of outer steel wheels. Sikkens paint. Color: Job Color.	1
INTERIOR PAINT		
8150-0011	The interior of the cab to be painted Zolatone gray.	1
STRIPING		
8300-0002-334-12	NFPA Scotchlite Stripe - 4" wide and straight on front/sides of cab and sides/rear of body. Color: White. Location: bottom of stripe flush with top of bumper and straight back.	1
8300-0042	White rubrail scotchlite insert.	1
8300-0123-000-72	Chevron "A" style 6" printed pattern NFPA Scotchlite striping. Provided to driver and officer rear compartment face, smooth plate panels and/or doors outboard and above the center rear compartment opening and the vertical hosebed extrusions (terminate just above the upper handrail stanchion). The vertical and horizontal extrusions inboard of the vertical hosebed extrusions shall remain visible with a sanded finish. Colors to be Yellow/Red.	1

WARRANTY / STANDARD & EXTENDED			
9100-0000	Standard 1 Year Warranty.	1	
9100-0003	Lifetime Frame Warranty.	1	
9100-0004	10 Year/100,000 Mile Structural Warranty - Statement of Warranty.	1	
9100-0005	10 Year Stainless Steel Plumbing Warranty - Statement of Warranty.	1	
9100-0019	10 Year Limited Paint and Perforation Warranty - For Sikkens Paint.	1	
SUPPORT, DELIVERY, INSPECTIONS AND MANUALS			
9300-0009	Manuals, Operator and Service CD-ROM.	1	
9300-0036	Tradition drive away.	1	
PRICE	2013 E-ONE TRADITION PUMPER - TYPHOON CUSTOM CHASSIS		$291,386.

STATE OF OHIO TERM SCHEDULE

4200 SURFACE RD
COLUMBUS, OH 43228

Quote No: 57476

2/26/2013

Quote Rev:5 Drawing Rev:1

Note: Hosebed height may not be the correct measurement for this combo. Compartment height may change.

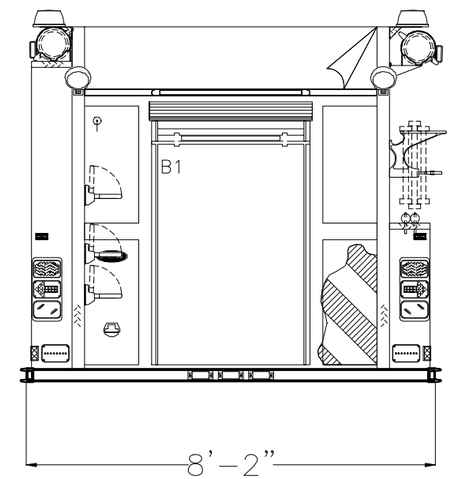

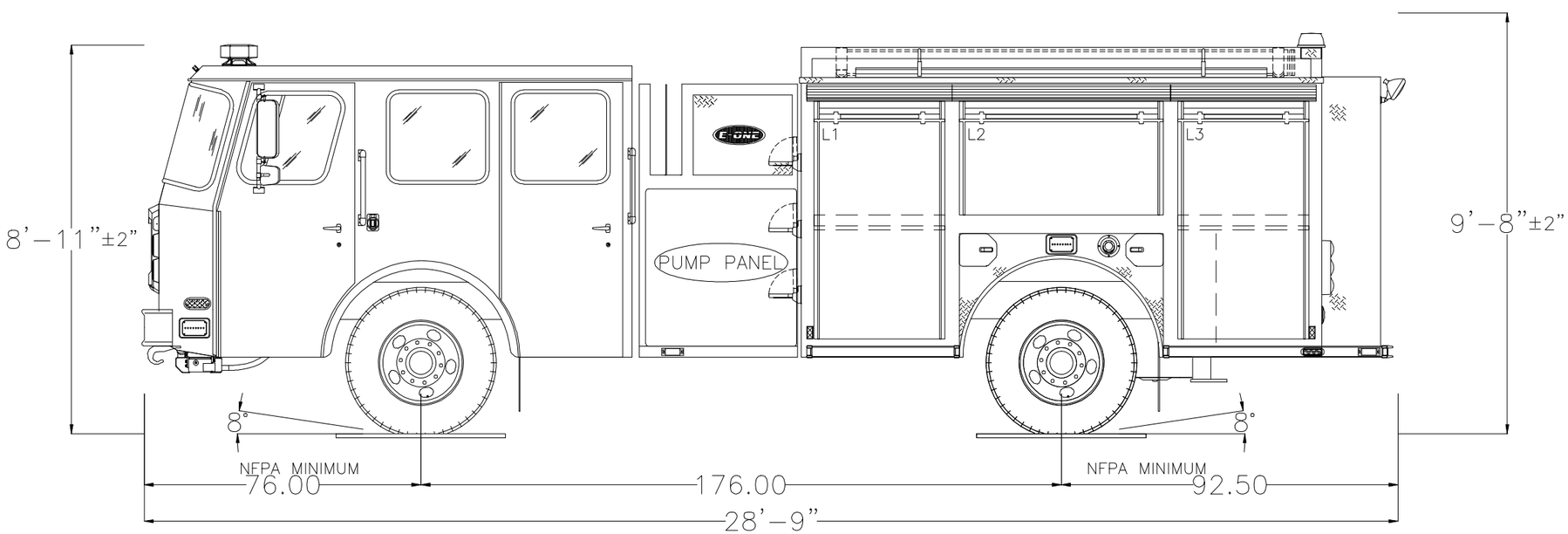

POWERED BY EZDRAW

Notice: This drawing provides a GENERAL REPRESENTATION of the vehicle configuration and should be used for evaluation purposes. The respective dimensions shown,including overall height and length, are estimates and may vary due to manufacturing processes. All other items such as lighting and fixtures, plumbing, compartmentation, and other generally assembled details are shown for REFERENCE ONLY and may not be a direct reflection of the final truck configuration. In ALL situations where this drawing may conflict with the specifications, THE SPECIFICATIONS, AS REFLECTED IN THE APPROVED SHOP ORDER, SHALL PREVAIL. Unless otherwise specified, the proposed apparatus will be manufactured to the latest NFPA recommendations as well as other applicable federally regulated safety regulations. E-One reserves the right to engineer and incorporate design improvements and changes without notice, while adhering to the intent of the specification.

HALE QFLO 1250 GPM PUMP
0 TOTAL TANK VOLUME

HOSE LOADS :

	OPENING		INTERIOR DIMENSIONS				
COMPT.	WIDTH	HEIGHT	LOWER WIDTH	LOWER HEIGHT	LOWER DEPTH	UPPER HEIGHT	UPPER DEPTH
L1	34	60.75	36	30	26	38.75	12
L2	54	26.75	56	30	N/A	26.75	12
L3	34	60.75	36	30	26	38.75	12
R1	34	22	36	30	26	0	N/A
R2	34	22	36	30	26	0	N/A
B1	36	45	38	30	26	24	14

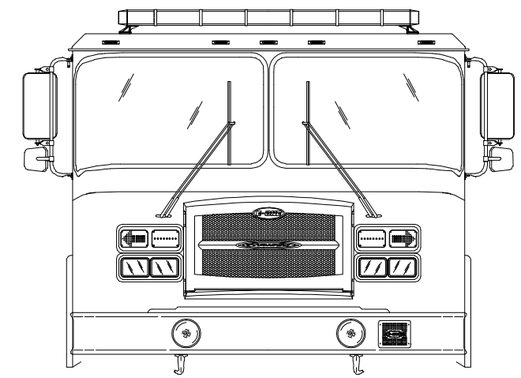

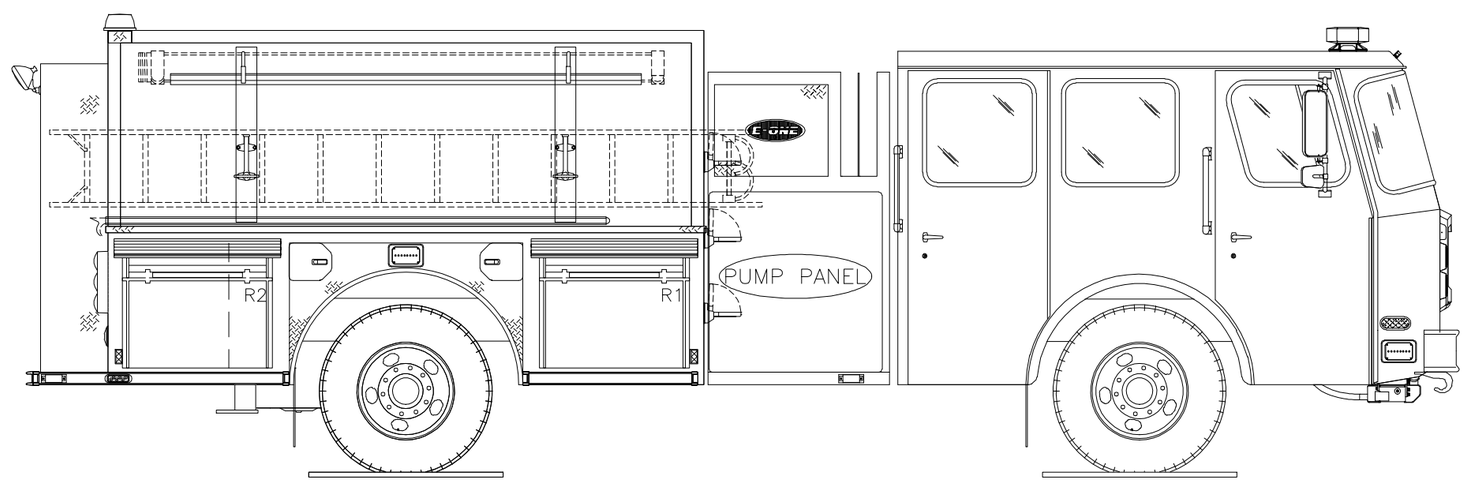

POWERED BY EZDRAW

Fire Apparatus Quotation for:
STATE OF OHIO TERM SCHEDULE

Quotation Number: 57477 Rev: 4

Unit Description: TDPM-COMM

Quote Description: Tradition Rescue Pumper, Commercial - Freightliner 2-dr

Salescode	Extended Description	Qty
TESTING COMPLIANCE STANDARD		
1001-0015	The E-ONE supplied components of the vehicle shall meet the requirements of NFPA 1901, 2009 edition.	1
CHASSIS MODEL		
1005-0523	M2 (2) door, 191" WB & 47" frame cut, front tow hooks, 12K & 23K axles, ABS brakes, radiator cooling sized for current emissions requirements, 50 gal. left hand fuel tank and 6 gal diesel exhaust fluid tank, EVS3000 transmission, (2) 1850CCA batteries, 275 alternator, ember separator, AC.	1
CHASSIS PREP		
1020-0010	Comm Chassis Prep E-1 Supp-FL.	1
FRAME ASSEMBLY		
1250-0011	Rear underbody support frame.	1
WHEEL OPTIONS		
1050-0034	Freightliner chassis rims painted job color. Tradition.	1
TIRE OPTIONS		
1060-0050	Tire pressure monitoring valve stem caps.	1
AIR SYSTEM OPTIONS		
1110-0010-277	Air inlet. To charge brake system. Commercial chassis only. Location: driver's door step area.	1
1110-0075	Dual Stuttertone Hood Mounted Air Horns with Driver and Officer Foot Switches to be Supplied and Installed by Freightliner. Tradition	1
ENGINES & TRANSMISSIONS		
1200-0126	Chassis speed to be electronically limited and not to exceed a maximum of 68 MPH.	1
ENGINES & TRANSMISSIONS		
	Note: Speed rating may be lower based off OEM tire ratings provided on chassis.	

1200-0248	Freightliner Cummins ISL 330 HP 2013 EPA engine.	1
1200-0251	Exhaust brake for use with Freightliner chassis.	1
CHASSIS OPTIONS		
1680-0011	Tow eyes rear below body, painted.	1
1680-0078	Tow hooks front. Not available with extended front bumper. Tow hooks are OEM supplied with chassis.	1
1680-0110	Chassis Trim Package for a (2) door Freightliner.	1
1680-0234-R01-P0	The fuel tank to be 50 gallons and located to the left hand side of cab.	1
1680-0235-R01	The batteries to be located under left hand side of cab.	1
CAB BADGE PACKAGE		
1610-0000	Cab and body to have applicable E-ONE logos.	1
MIRRORS		
1670-0034	Freightliner West Coast heated cab mirrors with remote control. Tradition.	1
MISC EXTERIOR CAB OPTIONS		
1675-0007	Diesel fuel only label.	1
SEATS		
1510-0237	Seating Package Two (2) Door Freightliner. Includes One (1) Seats Inc 911 Universal Hi-Back Air Ride Driver and One (1) 911 Fixed Officer (Non-SCBA).	1
1685-0012	Seating capacity tag of two occupants.	1
CAB ELECTRICAL OPTIONS		
1750-0059-277-04	Receptacle inlet 20 amp with a Yellow cover. Location: driver's door step area.	1
1750-0343	Battery charger E-ONE LPC 20. 120 volt inlet, 20 amp output.	1
BODY COMPT LEFT SIDE		
3100-0153	Driver side body with full height 42" wide forward and 56" wide rearward enhanced extended compartmentation. Includes (1) 56" wide compartment over the wheel well.	1
BODY COMPT RIGHT SIDE		
3120-0283	Officer side body with full height 42" wide forward and 56" wide rearward enhanced extended compartmentation. Includes (1) 56" wide compartment over the wheel well and one (1) storage tunnel.	1
BODY COMPT REAR		
3110-0013	Full Height Rear Compartment with Officer Side Storage Tunnel. Includes smooth plate panels and storage access door with push button latch.	1
3110-0052	Bolt-on diamond plate tailboard (full width of rear compartment). Includes the enhanced extended side compartment frame work and handrails- (2) vertically on trailing edge of body and horizontally mounted handrail(s) below hosebed.	1
3110-0092	Enhanced Extended Compartmentation stepped down below hosebed level. Includes	1

	embossed diamond plate compartment tops.	
DOORS		
3300-0017-004	Door roll up short (up to 45") with satin finish ROM. Location(s): L2.	1
3300-0017-016	Door roll up short (up to 45") with satin finish ROM. Location(s): R2.	1
3300-0019-003	Door roll up tall (greater than 45") with satin finish ROM. Location(s): L1.	1
3300-0019-005	Door roll up tall (greater than 45") with satin finish ROM. Location(s): L3.	1
3300-0019-015	Door roll up tall (greater than 45") with satin finish ROM. Location(s): R1.	1
3300-0019-017	Door roll up tall (greater than 45") with satin finish ROM. Location(s): R3.	1
3300-0019-027	Door roll up tall (greater than 45") with satin finish ROM. Location(s): B1.	1
SHELVES		
3370-0025-101	Permanent shelf. Locate in R1 at offset (above extrusion if applicable).	1
3370-0025-102	Permanent shelf. Locate in R3 at offset (above extrusion if applicable).	1
COVERS		
3305-0007-000-02	Vinyl Red hose bed cover with attached rear flap(s).	1
3305-0008-000-02	Vinyl Red crosslay cover with attached side flaps.	1
PUMP MODULE		
3130-0166	Pump Module to be 72" wide (side to side). Includes upper, lower, crosswalk, speedlay and tranverse module(s) if applicable.	1
3130-0192	Side Mount Pump Module. Includes area for single stacked double crosslay (notched divider).	1
PUMP PANELS		
3134-0011	Officer side pump panel to be vertically hinged on forward extrusion. Panel(s) to be secured in the closed position with push button latches. Upper panel to be held open with gas shock.	1
3134-0016	Stainless steel driver and officer side pump panels.	1
3134-0050	The gauge panel is to swing downward/forward for access to electrical connections on panel. Includes two (2) cable hold opens, and push button latches.	1
MISC PUMP PANEL OPTIONS		
4460-0003	Pump panel tags color coded per NFPA compliance.	1
PUMP MODULE OPTIONS		
3136-0038	Module mainframe for use with M2 chassis with 23,000 rear axle.	1
3136-0058	E-ONE logo mounted one each side on pump module/preconnect panels. Logos to be sized as applicable to available space on panels.	1
WATER TANK		
4010-0177	780 Gallon "R" Water Tank. UPF Poly III color fill towers. Note: Any foam cell(s) and/or storage options through the tank will reduce the overall water capacity.	1
TANK PLUMBING		

4450-0010	2" tank fill Akron manual valve.	1
4450-0119	3" tank to pump Akron manual valve w/4" plumbing.	1
LADDER STORAGE / RACKS		
3365-0028	Hard Suction Storage Rack. Driver side compartment top. Includes spring hold downs and scuff plates behind spring mounts (as applicable).	1
3365-0035	Hard Suction Storage Rack. Officer side compartment top. Includes spring hold downs and scuff plates behind spring mounts (as applicable).	1
3365-0049	Brand of ladders capable of being carried on unit to be Alco-Lite.	1
3365-0087-C57	The length of ladders capable of being stored shall be the following: 24' 2-section and 14' roof ladder.	1
3365-0149-I32	Storage tunnel capable of holding: (1) 2-section, (1) roof, (1) attic, (2) pike poles in Officer Side Storage Tunnel.	1
HANDRAILS / STEPS		
3330-0103	Dual lighted LED folding steps rear NFPA. Includes folding steps on driver side (staggered stepped as applicable with tailboard depth) for NFPA hosebed access and handrail mounted on driver side upper hosebed side (as applicable).	1
3330-0105-060	Dual lighted LED folding step. Location: officer side front compartment face. Each location requires a minimum of (1) handrail per NFPA.	3
3330-0105-062	Dual lighted LED folding step. Location: driver side front compartment face. Each location requires a minimum of (1) handrail per NFPA.	3
MISC BODY OPTIONS		
3090-0002	The unit has no overall height restrictions.	1
3090-0004	The unit has no overall length restrictions.	1
3090-0007	The hose bed is to have NFPA capacity.	1
3340-0004	Hosebed above the booster tank. Includes forward hosebed and tower(s) cover plate work (as applicable). Hosebed adjustable divider extrusion rearward of the furthest tower is to run full width of the hosebed (as is practical with other hosebed mounted equipment).	1
3340-0015	Diamond plate single axle wheel well. Includes bolt-on composite wheel well liners and aluminum trim fenderettes.	1
3340-0035	Divider Long. To run full length of hose bed (front to rear).	1
3340-0074	Body mainframe and hosebed side assemblies for a 85" high body.	1
3340-0093	Mud flaps, rear, black with E-ONE logo.	1
3340-0110	The rear of each hose bed divider to have a hand hold cut-out(s).	1
3340-0145	Rubrail for the body and pump area module(s).	1
SCBA BOTTLE STORAGE		
3320-0020	SCBA Bottle Storage. (4) Fire Shopp SCBA bottle storage with hinged doors with push button latches. (2) officer side and (2) driver side in wheel well area.	1
PUMPS		

4005-0030	Rating 1250 GPM	1
4005-0054	Hale Qflo-23L 1250 pump. Tradition.	1
PUMP CERTIFICATION		
4475-0000	Pump certification 750-2250 GPM	1
PUMP OPTIONS		
4015-0053-198	Steamers to be Flush + 1". Location: driver's side.	1
4015-0053-199	Steamers to be Flush + 1". Location: officer's side.	1
4015-0101	Pump cooler, 1/4" valve with 3/8" tubing.	1
INTAKES		
4440-0005	2.5" Left Intake Akron Manual Valve.	1
INTAKE OPTIONS		
4445-0016	Intake relief valve, Hale 2.5".	1
DISCHARGES AND PRECONNECTS		
4415-0012-654	1.5" crosslay with Akron manual valve. Location: crosslay 1 & 2.	2
4415-0022-350	2.5" Left Rear Discharge Akron Manual Valve. Location: left rear discharge.	1
4415-0041	3" Deck Gun Discharge, Akron manual valve.	1
4415-0161-581	2.5" Left Panel Discharge Akron Manual Valve w/30 Degree Droop. Location: left side discharge 1.	1
4415-0161-582	2.5" Left Panel Discharge Akron Manual Valve w/30 Degree Droop. Location: left side discharge 2.	1
4415-0164-583	2.5" Right Panel Discharge Akron Manual Valve w/30 Degree Droop. Location: right side discharge 1.	1
4417-0106-L88	Deck gun piping to be positioned centered in deck gun channel or centered and offset forward in dunnage area (as applicable to upper module area design).	1
DISCHARGE OPTIONS		
4417-0058-350	Bleeder drain valve plumbed to: left rear discharge.	1
4417-0058-573	Bleeder drain valve plumbed to: crosslay preconnect.	2
4417-0058-575	Bleeder drain valve plumbed to: left discharge.	2
4417-0058-576	Bleeder drain valve plumbed to: right discharge.	1
4417-0101-356	Automatic drain valve. For: deck gun.	1
PRESSURE GOVERNORS		
4465-0005	Class 1 Captain pressure governor.	1
GAUGES		
4435-0001	Class 1 Intelli-Tank water tank level gauge.	1
4435-0013	4.5" Class 1 compound pressure gauge (30-0-600 PSI).	2
4435-0015-350	2.5" Class 1 compound pressure gauge (30-0-600). Discharge(s): left rear discharge.	1

4435-0015-352	2.5" Class 1 compound pressure gauge (30-0-600). Discharge(s): 1.5 in. crosslay preconnect.	2
4435-0015-356	2.5" Class 1 compound pressure gauge (30-0-600). Discharge(s): deck gun.	1
4435-0015-581	2.5" Class 1 compound pressure gauge (30-0-600). Discharge(s): left side discharge 1.	1
4435-0015-582	2.5" Class 1 compound pressure gauge (30-0-600). Discharge(s): left side discharge 2.	1
4435-0015-583	2.5" Class 1 compound pressure gauge (30-0-600). Discharge(s): right side discharge 1.	1
4435-0069	Class 1 ENFO IV system on pump operator's panel.	1
ELECTRICAL SYSTEMS		
5010-0014-G97	Vehicle data recorder for commercial cab - 2009 NFPA compliant. Includes occupant detection with display. Display location: cab dash above transmission shift panel.	1
5010-0036	V-MUX Electrical system for pumper / tanker / rescue.	1
5010-0059-339	VFD Text display for V-MUX electrical system. Location: center of dash.	1
LIGHT BARS		
5300-0053	Light bar Whelen Freedom model FN66QLED 66" with MKEZ7 mounts. All LED light bar without rear facing LEDs. Location: Centered on the front cab roof.	1
WARNING LIGHT PACKAGES		
5550-0128-535	Whelen Super LED lower level warning light package. Includes (6) red 600 LED light heads, (2) red LIN3 lights and (2) red 500 LED light heads w/chrome flanges. Locate side facing lights: at forward most position, centered in rear wheel well, and side facing at rear of body in rubrail if equipped.	1
WARNING LIGHTS		
5600-0078-479-06	Whelen Super LED beacon (PR) model L31H with Red domes. Location rear upper body on aerial style brackets.	1
5600-0149-336	Hazard (door ajar) light, 2.5" incandescent. Location: cab dash.	1
SIRENS		
5500-0009	Federal PA300 electronic siren recessed mounted.	1
5500-0024-846	The electronic siren control is to be located on the center overhead console offset to driver side.	1
SPEAKERS		
5510-0029-209	Speaker, Federal Signal Dynamax ES100 with "E-ONE" grille through bumper. Location: driver side front bumper.	1
DOT LIGHTING		
5150-0007	Whelen 600 series LED vertical mount tail lights. Includes LED stop/tail, arrow turn and halogen back-up lights with vertical Cast 3 housing and weatherproof	1

	connectors.	
5150-0017	License plate light LED with chrome housing located at the rear of the body.	1
5150-0022	Marker light LED body package. Commercial pumper bodies only.	1
LIGHTS - COMPARTMENT, STEP & GROUND		
5380-0009	Compartment light package incandescent for medium bodies.	1
5380-0027	Ground light package for cab and body - small.	1
LIGHTS - DECK AND SCENE		
5390-0000-395	Deck light - Unity 12 volt (PR). Location: rear body/beavertail area on the trailing edge up high.	1
5390-0001	Hose bed light Unity. Locate at front area of hose bed. Switched with work light switch in cab.	1
5390-0022	Crosslay light Truck-Lite. Locate to rear of crosslay (SM) and forward of crosslay (TM as applicable). Switched with work light switch in cab.	1
LIGHTS - NON-WARNING		
5400-0003	Engine compartment light (EA).	1
5400-0010	Incandescent pump compartment light (EA).	1
5400-0031	Pair of Cab Dome Large Lights mounted driver and officer side front. N/A on E-One Chassis. Required on Comm Chassis.	1
5400-0123	Side mount pump module incandescent lighting. Includes (3) pump panel lights - (2) driver side and (1) officer side.	1
MISC ELECTRICAL		
5110-0017	Back-up alarm 97 dB.	1
HAND TOOLS		
7600-0005	Pike Pole Fiberglass 6'.	1
7600-0007	Pike Pole Fiberglass 10'.	1
HOSE / NOZZLES		
7700-0004	Hard suction hose 6" with Pyrolite couplings.	2
GROUND LADDERS		
7800-0007	Alco-Lite PRL-14' roof ladder.	1
7800-0016	Alco-Lite PEL-24' 2-section extension ladder.	1
7800-0032	Alco-Lite FL-10, 10' folding ladder w/safety shoes.	1
MISC LOOSE EQUIPMENT		
7900-0010	Chrome Barrel Strainer 6" NST.	1
7900-0014	DOT Required Drive Away Kit - Kit includes three (3) triangular warning reflectors with carrying case. This kit is for the end user and is to remain with the truck.	1
EXTERIOR PAINT		
8100-0089	All applicable pump/pre-connect application modules are to have a sanded finish	1

	(not painted job color). Includes upper and lower pump modules, crosswalk module and/or speedlay/pre-connect module (as applicable). Rear mounted body/pump module to be painted job color.		
8100-0116	Rear body surface to have a sanded finish (not painted job color). Includes hinged doors that do not have discrete sales codes and removable panels.	1	
8100-0182-000-17	Paint Body - Small - For Pumpers, Rear Mounts, S/A Tankers/Wetsides and Rescues. Sikkens paint. Color: FLNA3225E-1 Red.	1	
8100-0190-000-17	Freightliner cab paint. Paint color FLNA3225E-1 Red.	1	
STRIPING			
8300-0002-859-12	NFPA Scotchlite Stripe - 4" wide and straight on front/sides of cab and sides/rear of body. Color: White. Location: bottom of stripe flush with bottom of cab and straight back.	1	
8300-0042	White rubrail scotchlite insert.	1	
8300-0123-000-72	Chevron "A" style 6" printed pattern NFPA Scotchlite striping. Provided to driver and officer rear compartment face, smooth plate panels and/or doors outboard and above the center rear compartment opening and the vertical hosebed extrusions (terminate just above the upper handrail stanchion). The vertical and horizontal extrusions inboard of the vertical hosebed extrusions shall remain visible with a sanded finish. Colors to be Yellow/Red.	1	
WARRANTY / STANDARD & EXTENDED			
9100-0000	Standard 1 Year Warranty.	1	
9100-0004	10 Year/100,000 Mile Structural Warranty - Statement of Warranty.	1	
9100-0005	10 Year Stainless Steel Plumbing Warranty - Statement of Warranty.	1	
9100-0019	10 Year Limited Paint and Perforation Warranty - For Sikkens Paint.	1	
SUPPORT, DELIVERY, INSPECTIONS AND MANUALS			
9300-0009	Manuals, Operator and Service CD-ROM.	1	
9300-0036	Tradition drive away.	1	
PRICE	2013 E-ONE TRADITION PUMPER - FREIGHTLINER 2DR CHASSIS		$197,652

STATE OF OHIO TERM SCHEDULE

4200 SURFACE RD
COLUMBUS, OH 43228

Quote No: 57477

3/18/2013

Quote Rev:4 Drawing Rev:2

Note: Hosebed height may not be the correct measurement for this combo. Compartment height may change.

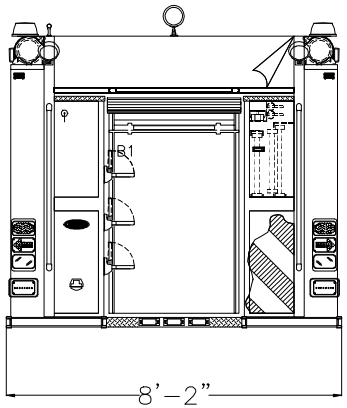

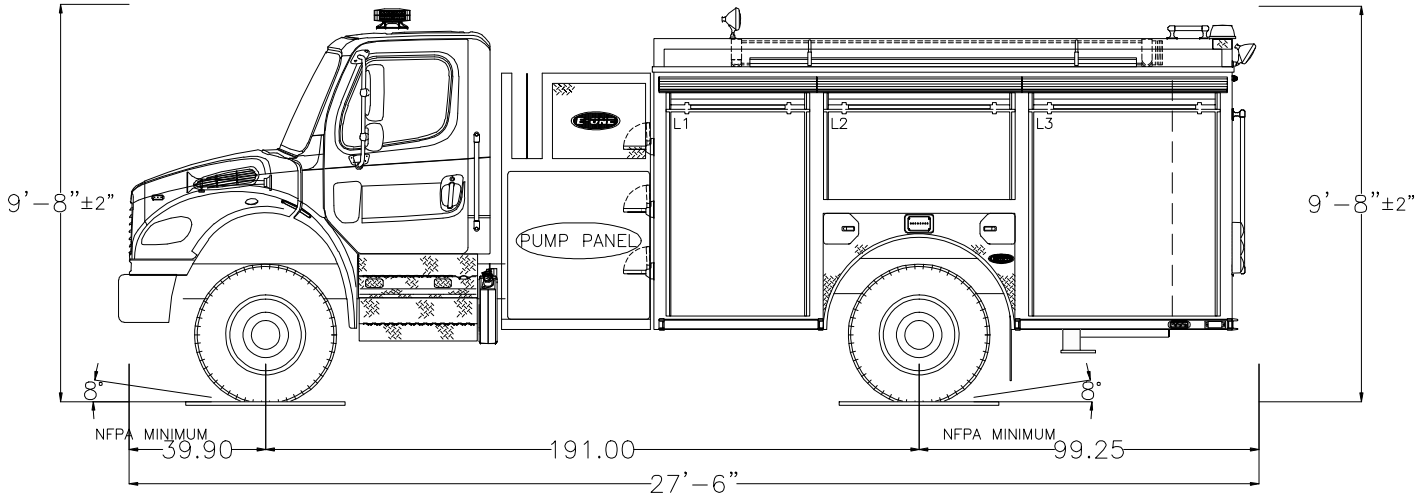

POWERED BY EZDRAW

Notice: This drawing provides a GENERAL REPRESENTATION of the vehicle configuration and should be used for evaluation purposes. The respective dimensions shown,including overall height and length, are estimates and may vary due to manufacturing processes. All other items such as lighting and fixtures, plumbing, compartmentation, and other generally assembled details are shown for REFERENCE ONLY and may not be a direct reflection of the final truck configuration. In ALL situations where this drawing may conflict with the specifications, THE SPECIFICATIONS, AS REFLECTED IN THE APPROVED SHOP ORDER, SHALL PREVAIL. Unless otherwise specified, the proposed apparatus will be manufactured to the latest NFPA recommendations as well as other applicable federally regulated safety regulations. E-One reserves the right to engineer and incorporate design improvements and changes without notice, while adhering to the intent of the specification.

HALE QFLO 1250 GPM PUMP 0 TOTAL TANK VOLUME	HOSE LOADS :

	OPENING		INTERIOR DIMENSIONS				
COMPT.	WIDTH	HEIGHT	LOWER WIDTH	LOWER HEIGHT	LOWER DEPTH	UPPER HEIGHT	UPPER DEPTH
L1	40	60.75	42	30	26	38.75	26
L2	54	26.75	56	30	N/A	26.75	26
L3	54	60.75	56	30	26	38.75	26
R1	40	60.75	42	30	26	38.75	12
R2	54	26.75	56	30	N/A	26.75	12
R3	54	60.75	56	30	26	38.75	12
B1	36	45	38	30	26	24	N/A

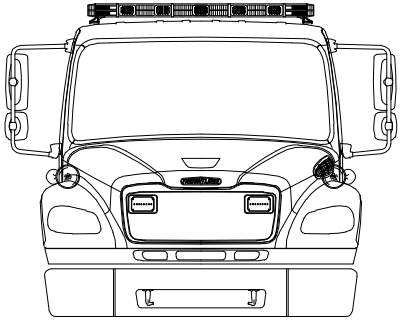

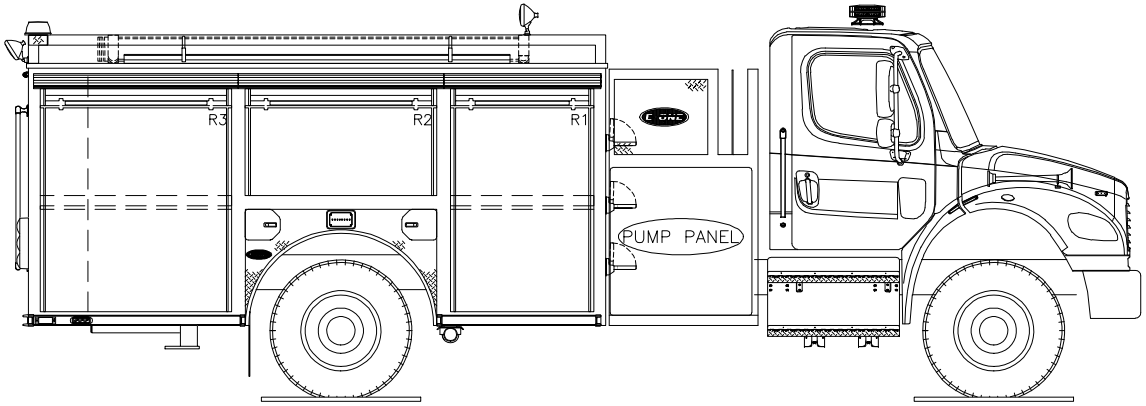

POWERED BY EZDRAW

Fire Apparatus Quotation for:
STATE OF OHIO TERM SCHEDULE

Quotation Number: 57478 Rev: 4

Unit Description: TDPM-COMM

Quote Description: Tradition Rescue Pumper, Commercial - International 2dr

Salescode	Extended Description	Qty
TESTING COMPLIANCE STANDARD		
1001-0015	The E-ONE supplied components of the vehicle shall meet the requirements of NFPA 1901, 2009 edition.	1
CHASSIS MODEL		
1005-0554	International 4400 (2) door, 191" WB & 47" frame cut, front tow hooks, 12K & 23K axles, ABS brakes, radiator cooling sized for current emissions requirements, 50 gal right hand fuel tank, EVS3000 transmission, (3) 1950CCA batteries, 320 alternator, ember separator and AC.	1
CHASSIS PREP		
1020-0011	Comm Chas Prep E-1 Supp-Non FL.	1
FRAME ASSEMBLY		
1250-0011	Rear underbody support frame.	1
WHEEL OPTIONS		
1050-0036	International chassis rims painted job color. Tradition.	1
TIRE OPTIONS		
1060-0050	Tire pressure monitoring valve stem caps.	1
AIR SYSTEM OPTIONS		
1110-0010-277	Air inlet. To charge brake system. Commercial chassis only. Location: driver's door step area.	1
1110-0063	Dual Grover Hood Mounted Air Horns with Driver and Officer Foot Switches to be Supplied and Installed by International. Tradition	1
ENGINES & TRANSMISSIONS		
1200-0126	Chassis speed to be electronically limited and not to exceed a maximum of 68 MPH. Note: Speed rating may be lower based off OEM tire ratings provided on chassis.	1
1200-0261	International Maxx Force 315 HP 2010 EPA engine.	1

1200-0263	Exhaust Brake for use with International chassis.	1
CHASSIS OPTIONS		
1680-0011	Tow eyes rear below body, painted.	1
1680-0078	Tow hooks front. Not available with extended front bumper. Tow hooks are OEM supplied with chassis.	1
1680-0107	Diamond plate trim package for a (2) door International. Includes a full length driver side and an officer side trim that will utilize pieces already supplied by the OEM.	1
1680-0128	The commercial chassis to have seat belt and chassis pre-wiring for NFPA seating indicator and vehicle data recorder.	1
1680-0234-R02-P0	The fuel tank to be 50 gallons and located to the right hand side of cab.	1
1680-0235-R01	The batteries to be located under left hand side of cab.	1
CAB BADGE PACKAGE		
1610-0000	Cab and body to have applicable E-ONE logos.	1
MIRRORS		
1670-0029	International West Coast heated mirrors with clearance lights and remote control.	1
MISC EXTERIOR CAB OPTIONS		
1675-0007	Diesel fuel only label.	1
SEATS		
1510-0114	Seating Package Two (2) Door International. Includes One (1) Nat'l Brand Air Ride Driver and One (1) Nat'l Brand Air Ride Officer (Non-SCBA).	1
1685-0012	Seating capacity tag of two occupants.	1
CAB ELECTRICAL OPTIONS		
1750-0059-277-04	Receptacle inlet 20 amp with a Yellow cover. Location: driver's door step area.	1
1750-0343	Battery charger E-ONE LPC 20. 120 volt inlet, 20 amp output.	1
BODY COMPT LEFT SIDE		
3100-0153	Driver side body with full height 42" wide forward and 56" wide rearward enhanced extended compartmentation. Includes (1) 56" wide compartment over the wheel well.	1
BODY COMPT RIGHT SIDE		
3120-0283	Officer side body with full height 42" wide forward and 56" wide rearward enhanced extended compartmentation. Includes (1) 56" wide compartment over the wheel well and one (1) storage tunnel.	1
BODY COMPT REAR		
3110-0013	Full Height Rear Compartment with Officer Side Storage Tunnel. Includes smooth plate panels and storage access door with push button latch.	1
3110-0052	Bolt-on diamond plate tailboard (full width of rear compartment). Includes the enhanced extended side compartment frame work and handrails- (2) vertically on	1

	trailing edge of body and horizontally mounted handrail(s) below hosebed.	
3110-0092	Enhanced Extended Compartmentation stepped down below hosebed level. Includes embossed diamond plate compartment tops.	1
DOORS		
3300-0017-004	Door roll up short (up to 45") with satin finish ROM. Location(s): L2.	1
3300-0017-016	Door roll up short (up to 45") with satin finish ROM. Location(s): R2.	1
3300-0019-003	Door roll up tall (greater than 45") with satin finish ROM. Location(s): L1.	1
3300-0019-005	Door roll up tall (greater than 45") with satin finish ROM. Location(s): L3.	1
3300-0019-015	Door roll up tall (greater than 45") with satin finish ROM. Location(s): R1.	1
3300-0019-017	Door roll up tall (greater than 45") with satin finish ROM. Location(s): R3.	1
3300-0019-027	Door roll up tall (greater than 45") with satin finish ROM. Location(s): B1.	1
SHELVES		
3370-0025-101	Permanent shelf. Locate in R1 at offset (above extrusion if applicable).	1
3370-0025-102	Permanent shelf. Locate in R3 at offset (above extrusion if applicable).	1
COVERS		
3305-0007-000-02	Vinyl Red hose bed cover with attached rear flap(s).	1
3305-0008-000-02	Vinyl Red crosslay cover with attached side flaps.	1
PUMP MODULE		
3130-0166	Pump Module to be 72" wide (side to side). Includes upper, lower, crosswalk, speedlay and tranverse module(s) if applicable.	1
3130-0192	Side Mount Pump Module. Includes area for single stacked double crosslay (notched divider).	1
PUMP PANELS		
3134-0011	Officer side pump panel to be vertically hinged on forward extrusion. Panel(s) to be secured in the closed position with push button latches. Upper panel to be held open with gas shock.	1
3134-0016	Stainless steel driver and officer side pump panels.	1
3134-0050	The gauge panel is to swing downward/forward for access to electrical connections on panel. Includes two (2) cable hold opens, and push button latches.	1
MISC PUMP PANEL OPTIONS		
4460-0003	Pump panel tags color coded per NFPA compliance.	1
PUMP MODULE OPTIONS		
3136-0041	Module mainframe for use with International chassis.	1
3136-0058	E-ONE logo mounted one each side on pump module/preconnect panels. Logos to be sized as applicable to available space on panels.	1
WATER TANK		
4010-0177	780 Gallon "R" Water Tank. UPF Poly III color fill towers. Note: Any foam cell(s)	1

	and/or storage options through the tank will reduce the overall water capacity.	
TANK PLUMBING		
4450-0010	2" tank fill Akron manual valve.	1
4450-0119	3" tank to pump Akron manual valve w/4" plumbing.	1
LADDER STORAGE / RACKS		
3365-0028	Hard Suction Storage Rack. Driver side compartment top. Includes spring hold downs and scuff plates behind spring mounts (as applicable).	1
3365-0035	Hard Suction Storage Rack. Officer side compartment top. Includes spring hold downs and scuff plates behind spring mounts (as applicable).	1
3365-0049	Brand of ladders capable of being carried on unit to be Alco-Lite.	1
3365-0087-C57	The length of ladders capable of being stored shall be the following: 24' 2-section and 14' roof ladder.	1
3365-0149-I32	Storage tunnel capable of holding: (1) 2-section, (1) roof, (1) attic, (2) pike poles in Officer Side Storage Tunnel.	1
HANDRAILS / STEPS		
3330-0103	Dual lighted LED folding steps rear NFPA. Includes folding steps on driver side (staggered stepped as applicable with tailboard depth) for NFPA hosebed access and handrail mounted on driver side upper hosebed side (as applicable).	1
3330-0105-060	Dual lighted LED folding step. Location: officer side front compartment face. Each location requires a minimum of (1) handrail per NFPA.	3
3330-0105-062	Dual lighted LED folding step. Location: driver side front compartment face. Each location requires a minimum of (1) handrail per NFPA.	3
MISC BODY OPTIONS		
3090-0002	The unit has no overall height restrictions.	1
3090-0004	The unit has no overall length restrictions.	1
3090-0007	The hose bed is to have NFPA capacity.	1
3340-0004	Hosebed above the booster tank. Includes forward hosebed and tower(s) cover plate work (as applicable). Hosebed adjustable divider extrusion rearward of the furthest tower is to run full width of the hosebed (as is practical with other hosebed mounted equipment).	1
3340-0015	Diamond plate single axle wheel well. Includes bolt-on composite wheel well liners and aluminum trim fenderettes.	1
3340-0035	Divider Long. To run full length of hose bed (front to rear).	1
3340-0074	Body mainframe and hosebed side assemblies for a 85" high body.	1
3340-0093	Mud flaps, rear, black with E-ONE logo.	1
3340-0110	The rear of each hose bed divider to have a hand hold cut-out(s).	1
3340-0145	Rubrail for the body and pump area module(s).	1
SCBA BOTTLE STORAGE		
3320-0020	SCBA Bottle Storage. (4) Fire Shopp SCBA bottle storage with hinged doors with	1

	push button latches. (2) officer side and (2) driver side in wheel well area.	
PUMPS		
4005-0030	Rating 1250 GPM	1
4005-0054	Hale Qflo-23L 1250 pump. Tradition.	1
PUMP CERTIFICATION		
4475-0000	Pump certification 750-2250 GPM	1
PUMP OPTIONS		
4015-0053-198	Steamers to be Flush + 1". Location: driver's side.	1
4015-0053-199	Steamers to be Flush + 1". Location: officer's side.	1
4015-0101	Pump cooler, 1/4" valve with 3/8" tubing.	1
INTAKES		
4440-0005	2.5" Left Intake Akron Manual Valve.	1
INTAKE OPTIONS		
4445-0016	Intake relief valve, Hale 2.5".	1
DISCHARGES AND PRECONNECTS		
4415-0012-654	1.5" crosslay with Akron manual valve. Location: crosslay 1 & 2.	2
4415-0022-350	2.5" Left Rear Discharge Akron Manual Valve. Location: left rear discharge.	1
4415-0041	3" Deck Gun Discharge, Akron manual valve.	1
4415-0161-581	2.5" Left Panel Discharge Akron Manual Valve w/30 Degree Droop. Location: left side discharge 1.	1
4415-0161-582	2.5" Left Panel Discharge Akron Manual Valve w/30 Degree Droop. Location: left side discharge 2.	1
4415-0164-583	2.5" Right Panel Discharge Akron Manual Valve w/30 Degree Droop. Location: right side discharge 1.	1
4417-0106-L88	Deck gun piping to be positioned centered in deck gun channel or centered and offset forward in dunnage area (as applicable to upper module area design).	1
DISCHARGE OPTIONS		
4417-0058-350	Bleeder drain valve plumbed to: left rear discharge.	1
4417-0058-573	Bleeder drain valve plumbed to: crosslay preconnect.	2
4417-0058-575	Bleeder drain valve plumbed to: left discharge.	2
4417-0058-576	Bleeder drain valve plumbed to: right discharge.	1
4417-0101-356	Automatic drain valve. For: deck gun.	1
PRESSURE GOVERNORS		
4465-0005	Class 1 Captain pressure governor.	1
GAUGES		
4435-0001	Class 1 Intelli-Tank water tank level gauge.	1

4435-0013	4.5" Class 1 compound pressure gauge (30-0-600 PSI).	2
4435-0015-350	2.5" Class 1 compound pressure gauge (30-0-600). Discharge(s): left rear discharge.	1
4435-0015-352	2.5" Class 1 compound pressure gauge (30-0-600). Discharge(s): 1.5 in. crosslay preconnect.	2
4435-0015-356	2.5" Class 1 compound pressure gauge (30-0-600). Discharge(s): deck gun.	1
4435-0015-581	2.5" Class 1 compound pressure gauge (30-0-600). Discharge(s): left side discharge 1.	1
4435-0015-582	2.5" Class 1 compound pressure gauge (30-0-600). Discharge(s): left side discharge 2.	1
4435-0015-583	2.5" Class 1 compound pressure gauge (30-0-600). Discharge(s): right side discharge 1.	1
4435-0069	Class 1 ENFO IV system on pump operator's panel.	1
ELECTRICAL SYSTEMS		
5010-0014-E12	Vehicle data recorder for commercial cab - 2009 NFPA compliant. Includes occupant detection with display. Display location: outboard on driver's side overhead console.	1
5010-0036	V-MUX Electrical system for pumper / tanker / rescue.	1
5010-0059-339	VFD Text display for V-MUX electrical system. Location: center of dash.	1
LIGHT BARS		
5300-0053	Light bar Whelen Freedom model FN66QLED 66" with MKEZ7 mounts. All LED light bar without rear facing LEDs. Location: Centered on the front cab roof.	1
WARNING LIGHT PACKAGES		
5550-0128-535	Whelen Super LED lower level warning light package. Includes (6) red 600 LED light heads, (2) red LIN3 lights and (2) red 500 LED light heads w/chrome flanges. Locate side facing lights: at forward most position, centered in rear wheel well, and side facing at rear of body in rubrail if equipped.	1
WARNING LIGHTS		
5600-0078-479-06	Whelen Super LED beacon (PR) model L31H with Red domes. Location rear upper body on aerial style brackets.	1
5600-0149-170	Hazard (door ajar) light, 2.5" incandescent. Location: center overhead.	1
SIRENS		
5500-0009	Federal PA300 electronic siren recessed mounted.	1
5500-0024-170	The electronic siren control is to be located on the center overhead.	1
SPEAKERS		
5510-0028	Speaker Federal Dynamax ES100. Located Officer's side behind Tow hook. Navistar 4400 chassis only with '07 engine.	1
DOT LIGHTING		
5150-0007	Whelen 600 series LED vertical mount tail lights. Includes LED stop/tail, arrow turn	1

	and halogen back-up lights with vertical Cast 3 housing and weatherproof connectors.	
5150-0017	License plate light LED with chrome housing located at the rear of the body.	1
5150-0022	Marker light LED body package. Commercial pumper bodies only.	1
LIGHTS - COMPARTMENT, STEP & GROUND		
5380-0009	Compartment light package incandescent for medium bodies.	1
5380-0027	Ground light package for cab and body - small.	1
LIGHTS - DECK AND SCENE		
5390-0000-395	Deck light - Unity 12 volt (PR). Location: rear body/beavertail area on the trailing edge up high.	1
5390-0001	Hose bed light Unity. Locate at front area of hose bed. Switched with work light switch in cab.	1
5390-0022	Crosslay light Truck-Lite. Locate to rear of crosslay (SM) and forward of crosslay (TM as applicable). Switched with work light switch in cab.	1
LIGHTS - NON-WARNING		
5400-0003	Engine compartment light (EA).	1
5400-0010	Incandescent pump compartment light (EA).	1
5400-0031	Pair of Cab Dome Large Lights mounted driver and officer side front. N/A on E-One Chassis. Required on Comm Chassis.	1
5400-0123	Side mount pump module incandescent lighting. Includes (3) pump panel lights - (2) driver side and (1) officer side.	1
MISC ELECTRICAL		
5110-0017	Back-up alarm 97 dB.	1
HAND TOOLS		
7600-0005	Pike Pole Fiberglass 6'.	1
7600-0007	Pike Pole Fiberglass 10'.	1
HOSE / NOZZLES		
7700-0004	Hard suction hose 6" with Pyrolite couplings.	2
GROUND LADDERS		
7800-0007	Alco-Lite PRL-14' roof ladder.	1
7800-0016	Alco-Lite PEL-24' 2-section extension ladder.	1
7800-0032	Alco-Lite FL-10, 10' folding ladder w/safety shoes.	1
MISC LOOSE EQUIPMENT		
7900-0010	Chrome Barrel Strainer 6" NST.	1
7900-0014	DOT Required Drive Away Kit - Kit includes three (3) triangular warning reflectors with carrying case. This kit is for the end user and is to remain with the truck.	1
EXTERIOR PAINT		

8100-0089	All applicable pump/pre-connect application modules are to have a sanded finish (not painted job color). Includes upper and lower pump modules, crosswalk module and/or speedlay/pre-connect module (as applicable). Rear mounted body/pump module to be painted job color.	1	
8100-0116	Rear body surface to have a sanded finish (not painted job color). Includes hinged doors that do not have discrete sales codes and removable panels.	1	
8100-0182-000-17	Paint Body - Small - For Pumpers, Rear Mounts, S/A Tankers/Wetsides and Rescues. Sikkens paint. Color: FLNA3225E-1 Red.	1	
8100-0191-000-17	International cab paint. Paint color FLNA3225E-1 Red.	1	
STRIPING			
8300-0002-859-12	NFPA Scotchlite Stripe - 4" wide and straight on front/sides of cab and sides/rear of body. Color: White. Location: bottom of stripe flush with bottom of cab and straight back.	1	
8300-0042	White rubrail scotchlite insert.	1	
8300-0123-000-72	Chevron "A" style 6" printed pattern NFPA Scotchlite striping. Provided to driver and officer rear compartment face, smooth plate panels and/or doors outboard and above the center rear compartment opening and the vertical hosebed extrusions (terminate just above the upper handrail stanchion). The vertical and horizontal extrusions inboard of the vertical hosebed extrusions shall remain visible with a sanded finish. Colors to be Yellow/Red.	1	
WARRANTY / STANDARD & EXTENDED			
9100-0000	Standard 1 Year Warranty.	1	
9100-0004	10 Year/100,000 Mile Structural Warranty - Statement of Warranty.	1	
9100-0005	10 Year Stainless Steel Plumbing Warranty - Statement of Warranty.	1	
9100-0019	10 Year Limited Paint and Perforation Warranty - For Sikkens Paint.	1	
SUPPORT, DELIVERY, INSPECTIONS AND MANUALS			
9300-0009	Manuals, Operator and Service CD-ROM.	1	
9300-0036	Tradition drive away.	1	
PRICE	2013 E-ONE TRADITION RESCUE PUMPER - INTERNATIONAL 2DR CHASSIS		$199,305.

STATE OF OHIO TERM SCHEDULE

4200 SURFACE RD
COLUMBUS, OH 43228

Quote No: 57478

3/18/2013

Quote Rev:4 Drawing Rev:2

Note: Hosebed height may not be the correct measurement for this combo. Compartment height may change.

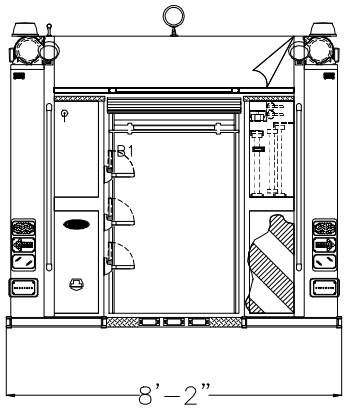

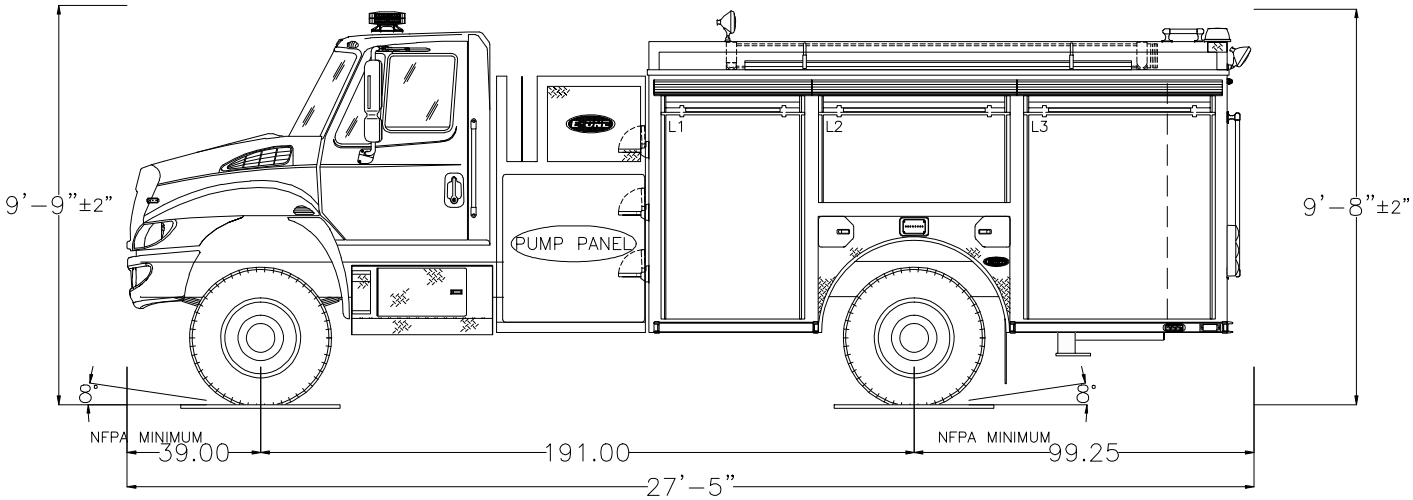

POWERED BY EZDRAW

Notice: This drawing provides a GENERAL REPRESENTATION of the vehicle configuration and should be used for evaluation purposes. The respective dimensions shown,including overall height and length, are estimates and may vary due to manufacturing processes. All other items such as lighting and fixtures, plumbing, compartmentation, and other generally assembled details are shown for REFERENCE ONLY and may not be a direct reflection of the final truck configuration. In ALL situations where this drawing may conflict with the specifications, THE SPECIFICATIONS, AS REFLECTED IN THE APPROVED SHOP ORDER, SHALL PREVAIL. Unless otherwise specified, the proposed apparatus will be manufactured to the latest NFPA recommendations as well as other applicable federally regulated safety regulations. E-One reserves the right to engineer and incorporate design improvements and changes without notice, while adhering to the intent of the specification.

HALE QFLO 1250 GPM PUMP
0 TOTAL TANK VOLUME

HOSE LOADS :

	OPENING		INTERIOR DIMENSIONS				
COMPT.	WIDTH	HEIGHT	LOWER WIDTH	LOWER HEIGHT	LOWER DEPTH	UPPER HEIGHT	UPPER DEPTH
L1	40	60.75	42	30	26	38.75	26
L2	54	26.75	56	30	N/A	26.75	26
L3	54	60.75	56	30	26	38.75	26
R1	40	60.75	42	30	26	38.75	12
R2	54	26.75	56	30	N/A	26.75	12
R3	54	60.75	56	30	26	38.75	12
B1	36	45	38	30	26	24	N/A

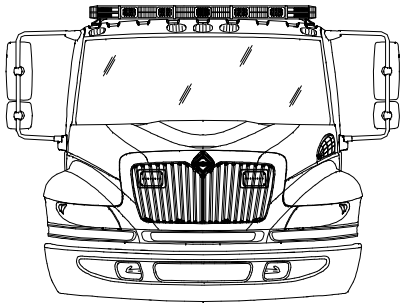

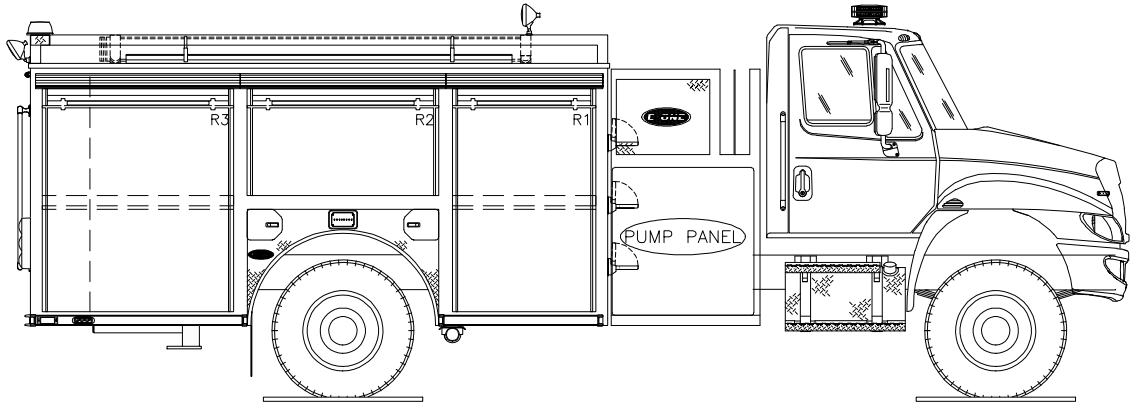

POWERED BY EZDRAW

Fire Apparatus Quotation for:
STATE OF OHIO TERM SCHEDULE

Quotation Number: 57479 Rev: 6

Unit Description: TDPM-TYPH

Quote Description: Tradition Custom Rescue Pumper, Typhoon Chassis

Salescode	Extended Description	Qty
TESTING COMPLIANCE STANDARD		
1001-0015	The E-ONE supplied components of the vehicle shall meet the requirements of NFPA 1901, 2009 edition.	1
BUMPERS		
1160-0000	Bumper 10" stainless steel.	1
1160-0011	4" Front Bumper Extension.	1
FRAME ASSEMBLY		
1250-0011	Rear underbody support frame.	1
1250-0018	Frame assembly to include 182" wheelbase and 47" framecut.	1
AXLE OPTIONS		
1025-0004	Meritor FL941 front axle 18,000 lb.	1
1025-0016	Meritor RS-24-160 single rear axle 24,000 lb. capacity.	1
1025-0029	Front shock absorbers.	1
SUSPENSIONS		
1070-0001	Rear suspension springs rated equal to the capacity of the axle.	1
WHEEL OPTIONS		
1050-0000	Steel wheels for front axle (2).	1
1050-0002	Steel wheels for rear axle (4).	1
TIRE OPTIONS		
1060-0001	Two Michelin 315 tires model XZA-1 for front axle.	1
1060-0015	Four Michelin 11R rear tires with XDN2 mud and snow tread.	1
1060-0050	Tire pressure monitoring valve stem caps.	1
BRAKE SYSTEMS		
1100-0000	16-1/2" x 6" S-cam brakes with ArvinMeritor automatic slack adjusters for front axle.	1

1100-0002	ArvinMeritor 16-1/2" x 7" S-cam brakes with cast brake drums for a single rear axle.	1
1100-0005	Brake system air 4X2/4X4.	1
1100-0006	Parking brake release mounted on the driver's side lower dash.	1
AIR SYSTEM OPTIONS		
1110-0000-001	Inlet for air system. Location: driver door jamb.	1
1110-0002	Air dryer Bendix AD-9.	1
1110-0006	Air lines nylon.	1
1110-0041	Air horns Grover recessed in bumper (PR).	1
ENGINES & TRANSMISSIONS		
1200-0017	Push-button transmission shift selector.	1
1200-0020	TransSynd synthetic transmission fluid for EVS3000.	1
1200-0097	Electronically limited speed to 68 MPH maximum. Note: Max speed may be set at 65 MPH due to tire rating.	1
1200-0233	Eng/Trans Cummins ISL 330HP/EVS3000 2013 EPA compliant engine.	1
SECONDARY BRAKING		
1125-0002	Jacobs engine compression brake.	1
COOLING PACKAGE		
1800-0013	Cooling system for use with Cyclone II X, Typhoon X, and Quest chassis. For use with 2010/2013 EPA engines. Includes coolant recovery system.	1
FUEL SYSTEMS		
1350-0003	Fuel system 50 gallon.	1
1350-0022	Fuel line hose rubber.	1
ALTERNATOR		
1700-0003	Alternator Leece Neville 270 amp SAE, 240 amp NFPA rating.	1
BATTERIES		
1400-0002	Battery four group 31 1000 CCA.	1
CHASSIS OPTIONS		
1680-0005	Thermatic fan clutch.	1
1680-0006	Drivelines 1710.	1
1680-0011	Tow eyes rear below body, painted.	1
1680-0042	Tow hooks front painted in the down position.	1
1680-0250-M58	Diesel Exhaust Fluid (DEF) 5 gallon tank for 2013 EPA engines. Location: left side below rear of cab.	1
CAB MODEL		

1520-0013	Typhoon X medium cab with 58" CA	1
CAB ROOF TYPE		
1615-0010	Cab roof to be "flat" (non-vista).	1
CAB BADGE PACKAGE		
1610-0000	Cab and body to have applicable E-ONE logos.	1
GRILLE		
1620-0004	ABS chrome plated grille.	1
CAB DOOR OPTIONS		
1550-0003	Rear crew cab doors in the medium position.	1
1550-0005	Driver and officer cab door windows. Include forward vent windows.	1
1550-0011	Rear crew cab door windows. Includes manual roll-down actuation. Not available with paddle style door latching.	1
1550-0016	Cab door panels ABS.	1
1550-0025	All cab doors shall have "L" style exterior latches.	1
1550-0027	Front cab door windows to manually roll down.	1
1550-0037-659	(4) Incandescent cab step area lighting. Locate each light in on each cab door in the inboard position. Lights to be switched with door ajar.	1
1550-0044	All cab door kick plates to be made from diamond plate aluminum.	1
1550-0059-000-72	Reflective Yellow/Red printed striping positioned in the "A" formation located in the lower cab door panels.	1
1550-0077	Interior cab door locks - manual. Will be individually actuated from each respective door. Includes barrel style key lock on each exterior cab door.	1
1550-0084	All cab exterior access doors to have 1250 keyed locks.	1
MIRRORS		
1670-0003	Velvac 2010 mirrors. Door mounted west coast style with remote control and heat.	1
MISC EXTERIOR CAB OPTIONS		
1550-0020	Windows cab side fixed driver's side.	1
1550-0033	Windows cab side fixed officer's side.	1
1675-0022	Pair of 18" handrails located just behind driver and officer front door one each side.	1
1675-0023	Pair of 18" handrails located just behind driver and officer rear door (ALS doors if equipped) one each side.	1
1675-0030	Mud flaps, front, black with E-ONE logo.	1
1675-0047	Rear cab wall to be 3/16" aluminum diamond plate.	1
HVAC		
1515-0017	Air conditioning for the Typhoon X, CII X and Quest with Cummins ISC/ISL engine, radiator mounted condenser.	1
1685-0057	Heaters rear with covers (PR), and front heater with heat to the feet for the driver	1

	and officer.	
SEATS		
1510-0003	Seats, Inc. brand 911 cab seats.	1
1510-0007	Seat cover material vinyl.	1
1510-0008	Seat color gray.	1
1510-0035-147	Universal air pack bottle bracket (EA). Location: officer's seat.	1
1510-0035-148	Universal air pack bottle bracket (EA). Location: rear facing driver's side.	1
1510-0035-215	Universal air pack bottle bracket (EA). Location: rear facing officer's side.	1
1510-0038	Driver seat 911 air ride.	1
1510-0042	Officer seat to be 911 fixed SCBA.	1
1510-0050	Rear facing 911 seat with SCBA driver's side.	1
1510-0053	Rear facing 911 seat with SCBA officer's side.	1
1685-0031	Seating capacity tag of four occupants.	1
MISC INTERIOR CAB OPTIONS		
1685-0000	Cab interior gray. Does not include engine cover or seat color.	1
1685-0005	Lexan sun visors, driver and officer's side overhead.	1
1685-0168	ABS Dash package. Includes center and officer side dash, lower kick panels and "A" post covers.	1
1685-0187	Severe duty engine cover, molded polyurethane.	1
CAB ELECTRICAL OPTIONS		
1750-0013-172	Turn signal Whelen 600 LED amber arrow pair located upper headlight bezel.	1
1750-0029	Switch horn button two position DOT/air horn.	1
1750-0046-195	Cab Headlights. Position: lower.	1
1750-0059-179-04	Receptacle inlet 20 amp with a Yellow cover. Location: outside driver's door next to handrail.	1
1750-0072-593	12 VDC (or 24VDC) electrical outlet in the cab wired battery hot. Location: officer side dash.	2
1750-0075	English dominant main cab gauge cluster.	1
1750-0188	DPF regeneration override switch.	1
1750-0198-A31	Battery charger to be located behind driver's seat.	1
1750-0343	Battery charger E-ONE LPC 20. 120 volt inlet, 20 amp output.	1
5400-0037	Dome Lts Red/White Incandescent. Package includes two lights mounted in the front and two mounted in the rear of the cab. White light wire through door and light assembly mounted switch. Red light through light assembly mounted switch.	1
BODY COMPT LEFT SIDE		
3100-0153	Driver side body with full height 42" wide forward and 56" wide rearward enhanced extended compartmentation. Includes (1) 56" wide compartment over the wheel well.	1

BODY COMPT RIGHT SIDE		
3120-0283	Officer side body with full height 42" wide forward and 56" wide rearward enhanced extended compartmentation. Includes (1) 56" wide compartment over the wheel well and one (1) storage tunnel.	1
BODY COMPT REAR		
3110-0013	Full Height Rear Compartment with Officer Side Storage Tunnel. Includes smooth plate panels and storage access door with push button latch.	1
3110-0052	Bolt-on diamond plate tailboard (full width of rear compartment). Includes the enhanced extended side compartment frame work and handrails- (2) vertically on trailing edge of body and horizontally mounted handrail(s) below hosebed.	1
3110-0092	Enhanced Extended Compartmentation stepped down below hosebed level. Includes embossed diamond plate compartment tops.	1
DOORS		
3300-0017-004	Door roll up short (up to 45") with satin finish ROM. Location(s): L2.	1
3300-0017-016	Door roll up short (up to 45") with satin finish ROM. Location(s): R2.	1
3300-0019-003	Door roll up tall (greater than 45") with satin finish ROM. Location(s): L1.	1
3300-0019-005	Door roll up tall (greater than 45") with satin finish ROM. Location(s): L3.	1
3300-0019-015	Door roll up tall (greater than 45") with satin finish ROM. Location(s): R1.	1
3300-0019-017	Door roll up tall (greater than 45") with satin finish ROM. Location(s): R3.	1
3300-0019-027	Door roll up tall (greater than 45") with satin finish ROM. Location(s): B1.	1
SHELVES		
3370-0025-101	Permanent shelf. Locate in R1 at offset (above extrusion if applicable).	1
3370-0025-102	Permanent shelf. Locate in R3 at offset (above extrusion if applicable).	1
COVERS		
3305-0007-000-02	Vinyl Red hose bed cover with attached rear flap(s).	1
3305-0008-000-02	Vinyl Red crosslay cover with attached side flaps.	1
PUMP MODULE		
3130-0166	Pump Module to be 72" wide (side to side). Includes upper, lower, crosswalk, speedlay and tranverse module(s) if applicable.	1
3130-0192	Side Mount Pump Module. Includes area for single stacked double crosslay (notched divider).	1
PUMP PANELS		
3134-0011	Officer side pump panel to be vertically hinged on forward extrusion. Panel(s) to be secured in the closed position with push button latches. Upper panel to be held open with gas shock.	1
3134-0016	Stainless steel driver and officer side pump panels.	1
3134-0050	The gauge panel is to swing downward/forward for access to electrical connections on panel. Includes two (2) cable hold opens, and push button latches.	1

MISC PUMP PANEL OPTIONS		
4460-0003	Pump panel tags color coded per NFPA compliance.	1
4460-0034	Cab jack access door. Located on officer side pump panel in upper rearward area. Includes twist and turn latch.	1
PUMP MODULE OPTIONS		
3136-0040	Module mainframe for use with Typhoon chassis.	1
3136-0058	E-ONE logo mounted one each side on pump module/preconnect panels. Logos to be sized as applicable to available space on panels.	1
WATER TANK		
4010-0177	780 Gallon "R" Water Tank. UPF Poly III color fill towers. Note: Any foam cell(s) and/or storage options through the tank will reduce the overall water capacity.	1
TANK PLUMBING		
4450-0010	2" tank fill Akron manual valve.	1
4450-0119	3" tank to pump Akron manual valve w/4" plumbing.	1
LADDER STORAGE / RACKS		
3365-0028	Hard Suction Storage Rack. Driver side compartment top. Includes spring hold downs and scuff plates behind spring mounts (as applicable).	1
3365-0035	Hard Suction Storage Rack. Officer side compartment top. Includes spring hold downs and scuff plates behind spring mounts (as applicable).	1
3365-0049	Brand of ladders capable of being carried on unit to be Alco-Lite.	1
3365-0087-C57	The length of ladders capable of being stored shall be the following: 24' 2-section and 14' roof ladder.	1
3365-0149-I32	Storage tunnel capable of holding: (1) 2-section, (1) roof, (1) attic, (2) pike poles in Officer Side Storage Tunnel.	1
HANDRAILS / STEPS		
3330-0103	Dual lighted LED folding steps rear NFPA. Includes folding steps on driver side (staggered stepped as applicable with tailboard depth) for NFPA hosebed access and handrail mounted on driver side upper hosebed side (as applicable).	1
3330-0105-060	Dual lighted LED folding step. Location: officer side front compartment face. Each location requires a minimum of (1) handrail per NFPA.	3
3330-0105-062	Dual lighted LED folding step. Location: driver side front compartment face. Each location requires a minimum of (1) handrail per NFPA.	3
MISC BODY OPTIONS		
3090-0002	The unit has no overall height restrictions.	1
3090-0004	The unit has no overall length restrictions.	1
3090-0007	The hose bed is to have NFPA capacity.	1
3340-0004	Hosebed above the booster tank. Includes forward hosebed and tower(s) cover plate work (as applicable). Hosebed adjustable divider extrusion rearward of the furthest tower is to run full width of the hosebed (as is practical with other hosebed mounted	1

	equipment).	
3340-0015	Diamond plate single axle wheel well. Includes bolt-on composite wheel well liners and aluminum trim fenderettes.	1
3340-0035	Divider Long. To run full length of hose bed (front to rear).	1
3340-0058	Recessed fuel fill driver side wheel well.	1
3340-0074	Body mainframe and hosebed side assemblies for a 85" high body.	1
3340-0093	Mud flaps, rear, black with E-ONE logo.	1
3340-0110	The rear of each hose bed divider to have a hand hold cut-out(s).	1
3340-0145	Rubrail for the body and pump area module(s).	1
SCBA BOTTLE STORAGE		
3320-0020	SCBA Bottle Storage. (4) Fire Shopp SCBA bottle storage with hinged doors with push button latches. (2) officer side and (2) driver side in wheel well area.	1
PUMPS		
4005-0030	Rating 1250 GPM	1
4005-0054	Hale Qflo-23L 1250 pump. Tradition.	1
PUMP CERTIFICATION		
4475-0000	Pump certification 750-2250 GPM	1
PUMP OPTIONS		
4015-0053-198	Steamers to be Flush + 1". Location: driver's side.	1
4015-0053-199	Steamers to be Flush + 1". Location: officer's side.	1
4015-0101	Pump cooler, 1/4" valve with 3/8" tubing.	1
INTAKES		
4440-0005	2.5" Left Intake Akron Manual Valve.	1
INTAKE OPTIONS		
4445-0016	Intake relief valve, Hale 2.5".	1
DISCHARGES AND PRECONNECTS		
4415-0012-654	1.5" crosslay with Akron manual valve. Location: crosslay 1 & 2.	2
4415-0022-350	2.5" Left Rear Discharge Akron Manual Valve. Location: left rear discharge.	1
4415-0041	3" Deck Gun Discharge, Akron manual valve.	1
4415-0161-581	2.5" Left Panel Discharge Akron Manual Valve w/30 Degree Droop. Location: left side discharge 1.	1
4415-0161-582	2.5" Left Panel Discharge Akron Manual Valve w/30 Degree Droop. Location: left side discharge 2.	1
4415-0164-583	2.5" Right Panel Discharge Akron Manual Valve w/30 Degree Droop. Location: right side discharge 1.	1
4415-0164-584	2.5" Right Panel Discharge Akron Manual Valve w/30 Degree Droop. Location: right side discharge 2.	1

4417-0106-L88	Deck gun piping to be positioned centered in deck gun channel or centered and offset forward in dunnage area (as applicable to upper module area design).	1
DISCHARGE OPTIONS		
4417-0058-350	Bleeder drain valve plumbed to: left rear discharge.	1
4417-0058-573	Bleeder drain valve plumbed to: crosslay preconnect.	2
4417-0058-575	Bleeder drain valve plumbed to: left discharge.	2
4417-0058-576	Bleeder drain valve plumbed to: right discharge.	2
4417-0101-356	Automatic drain valve. For: deck gun.	1
PRESSURE GOVERNORS		
4465-0005	Class 1 Captain pressure governor.	1
GAUGES		
4435-0001	Class 1 Intelli-Tank water tank level gauge.	1
4435-0013	4.5" Class 1 compound pressure gauge (30-0-600 PSI).	2
4435-0015-350	2.5" Class 1 compound pressure gauge (30-0-600). Discharge(s): left rear discharge.	1
4435-0015-352	2.5" Class 1 compound pressure gauge (30-0-600). Discharge(s): 1.5 in. crosslay preconnect.	2
4435-0015-356	2.5" Class 1 compound pressure gauge (30-0-600). Discharge(s): deck gun.	1
4435-0015-581	2.5" Class 1 compound pressure gauge (30-0-600). Discharge(s): left side discharge 1.	1
4435-0015-582	2.5" Class 1 compound pressure gauge (30-0-600). Discharge(s): left side discharge 2.	1
4435-0015-583	2.5" Class 1 compound pressure gauge (30-0-600). Discharge(s): right side discharge 1.	1
4435-0015-584	2.5" Class 1 compound pressure gauge (30-0-600). Discharge(s): right side discharge 2.	1
4435-0069	Class 1 ENFO IV system on pump operator's panel.	1
ELECTRICAL SYSTEMS		
5010-0013-E91	Vehicle data recorder - 2009 NFPA compliant. Includes occupant detection with display. Display location: Driver side of center dash electrical cover.	1
5010-0036	V-MUX Electrical system for pumper / tanker / rescue.	1
5010-0059-339	VFD Text display for V-MUX electrical system. Location: center of dash.	1
LIGHT BARS		
5300-0055	Light bar Whelen Freedom model FN72QLED 72" LED with MKEZ7 mounts and clear lenses. Location: Centered on the front cab roof.	1
WARNING LIGHT PACKAGES		
5550-0059-535	Whelen Super LED lower level warning light package. Includes (8) red 600 LED light heads and (2) red 500 LED light heads w/chrome flanges. Locate side facing lights: at forward most position, centered in rear wheel well, and side facing at rear of body	1

	in rubrail if equipped.	
WARNING LIGHTS		
5600-0078-479-06	Whelen Super LED beacon (PR) model L31H with Red domes. Location rear upper body on aerial style brackets.	1
5600-0149-170	Hazard (door ajar) light, 2.5" incandescent. Location: center overhead.	1
SIRENS		
5500-0009	Federal PA300 electronic siren recessed mounted.	1
5500-0024-170	The electronic siren control is to be located on the center overhead.	1
SPEAKERS		
5510-0029-209	Speaker, Federal Signal Dynamax ES100 with "E-ONE" grille through bumper. Location: driver side front bumper.	1
DOT LIGHTING		
5150-0007	Whelen 600 series LED vertical mount tail lights. Includes LED stop/tail, arrow turn and halogen back-up lights with vertical Cast 3 housing and weatherproof connectors.	1
5150-0017	License plate light LED with chrome housing located at the rear of the body.	1
5150-0025	Marker light LED body/cab package. E-One custom cab and pumper or tanker body only.	1
LIGHTS - COMPARTMENT, STEP & GROUND		
5380-0009	Compartment light package incandescent for medium bodies.	1
5380-0027	Ground light package for cab and body - small.	1
LIGHTS - DECK AND SCENE		
5390-0000-395	Deck light - Unity 12 volt (PR). Location: rear body/beavertail area on the trailing edge up high.	1
5390-0001	Hose bed light Unity. Locate at front area of hose bed. Switched with work light switch in cab.	1
5390-0022	Crosslay light Truck-Lite. Locate to rear of crosslay (SM) and forward of crosslay (TM as applicable). Switched with work light switch in cab.	1
LIGHTS - NON-WARNING		
5400-0003	Engine compartment light (EA).	1
5400-0010	Incandescent pump compartment light (EA).	1
5400-0039	Spotlight Specialty 2150 hand held located on officer's side of cab dash - hardwired.	1
5400-0123	Side mount pump module incandescent lighting. Includes (3) pump panel lights - (2) driver side and (1) officer side.	1
CONTROLS / SWITCHES		
5100-0000-199	Foot switch to control air horns located officer's side.	1
5100-0007-198	Foot switch to control electronic siren located driver's side.	1

MISC ELECTRICAL		
5110-0017	Back-up alarm 97 dB.	1
HAND TOOLS		
7600-0005	Pike Pole Fiberglass 6'.	1
7600-0007	Pike Pole Fiberglass 10'.	1
HOSE / NOZZLES		
7700-0004	Hard suction hose 6" with Pyrolite couplings.	2
GROUND LADDERS		
7800-0007	Alco-Lite PRL-14' roof ladder.	1
7800-0016	Alco-Lite PEL-24' 2-section extension ladder.	1
7800-0032	Alco-Lite FL-10, 10' folding ladder w/safety shoes.	1
MISC LOOSE EQUIPMENT		
7900-0010	Chrome Barrel Strainer 6" NST.	1
7900-0014	DOT Required Drive Away Kit - Kit includes three (3) triangular warning reflectors with carrying case. This kit is for the end user and is to remain with the truck.	1
EXTERIOR PAINT		
8100-0089	All applicable pump/pre-connect application modules are to have a sanded finish (not painted job color). Includes upper and lower pump modules, crosswalk module and/or speedlay/pre-connect module (as applicable). Rear mounted body/pump module to be painted job color.	1
8100-0116	Rear body surface to have a sanded finish (not painted job color). Includes hinged doors that do not have discrete sales codes and removable panels.	1
8100-0176-000-17	Paint E-ONE chassis cab - Sikkens paint. Color: FLNA3225E-1 Red.	1
8100-0182-000-17	Paint Body - Small - For Pumpers, Rear Mounts, S/A Tankers/Wetsides and Rescues. Sikkens paint. Color: FLNA3225E-1 Red.	1
8100-0186-000-39	Paint exterior surface of outer steel wheels. Sikkens paint. Color: Job Color.	1
INTERIOR PAINT		
8150-0011	The interior of the cab to be painted Zolatone gray.	1
STRIPING		
8300-0002-334-12	NFPA Scotchlite Stripe - 4" wide and straight on front/sides of cab and sides/rear of body. Color: White. Location: bottom of stripe flush with top of bumper and straight back.	1
8300-0042	White rubrail scotchlite insert.	1
8300-0123-000-72	Chevron "A" style 6" printed pattern NFPA Scotchlite striping. Provided to driver and officer rear compartment face, smooth plate panels and/or doors outboard and above the center rear compartment opening and the vertical hosebed extrusions (terminate just above the upper handrail stanchion). The vertical and horizontal extrusions inboard of the vertical hosebed extrusions shall remain visible with a	1

sanded finish. Colors to be Yellow/Red.

WARRANTY / STANDARD & EXTENDED			
9100-0000	Standard 1 Year Warranty.	1	
9100-0003	Lifetime Frame Warranty.	1	
9100-0004	10 Year/100,000 Mile Structural Warranty - Statement of Warranty.	1	
9100-0005	10 Year Stainless Steel Plumbing Warranty - Statement of Warranty.	1	
9100-0019	10 Year Limited Paint and Perforation Warranty - For Sikkens Paint.	1	
SUPPORT, DELIVERY, INSPECTIONS AND MANUALS			
9300-0009	Manuals, Operator and Service CD-ROM.	1	
9300-0036	Tradition drive away.	1	
PRICE	2013 E-ONE TRADITION RESCUE PUMPER - TYPHOON CUSTOM CHASSIS		$303,359.

STATE OF OHIO TERM SCHEDULE

4200 SURFACE RD
COLUMBUS, OH 43228

Quote No: 57479

2/26/2013

Quote Rev:6 Drawing Rev:1

Note: Hosebed height may not be the correct measurement for this combo. Compartment height may change.

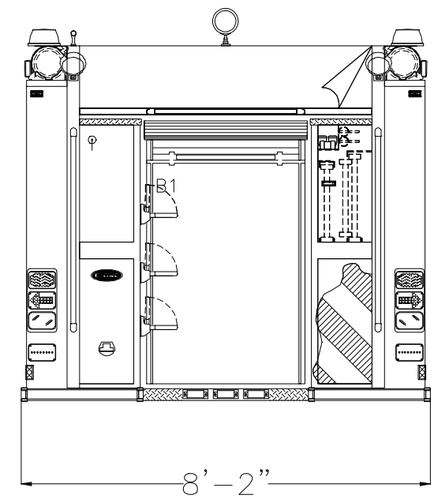

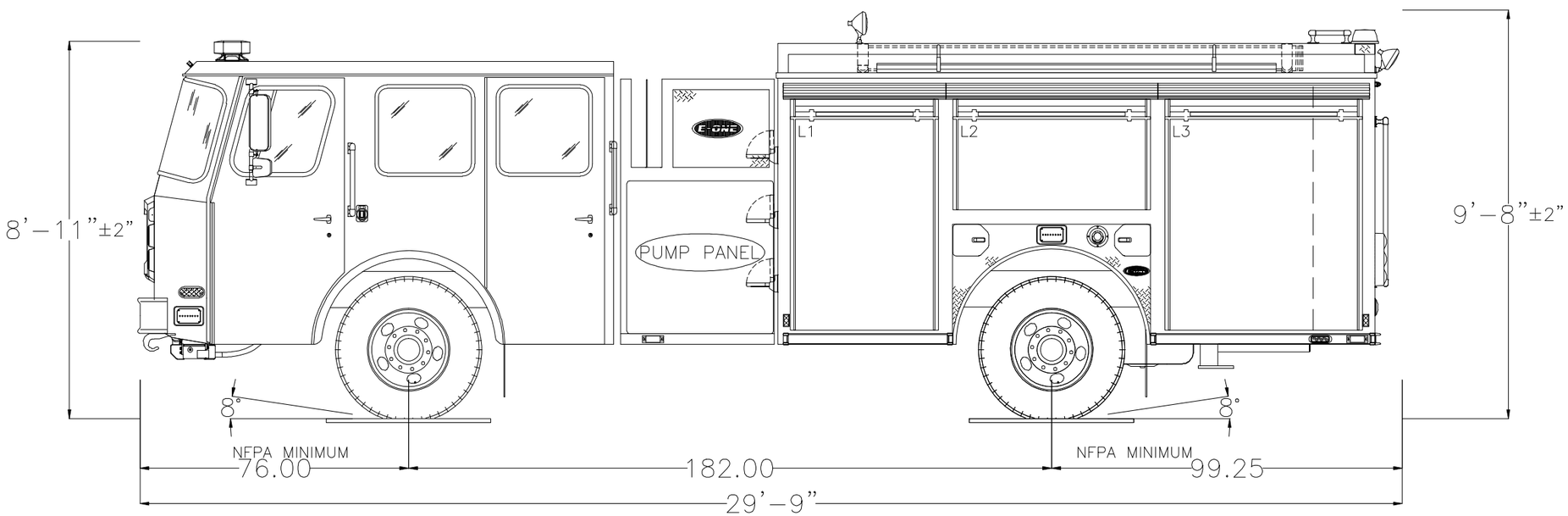

POWERED BY EZDRAW

Notice This drawing provides a GENERAL REPRESENTATION of the vehicle configuration and should be used for evaluation purposes. The respective dimensions shown,including overall height and length, are estimates and may vary due to manufacturing processes. All other items such as lighting and fixtures, plumbing, compartmentation, and other generally assembled details are shown for REFERENCE ONLY and may not be a direct reflection of the final truck configuration. In ALL situations where this drawing may conflict with the specifications, THE SPECIFICATIONS, AS REFLECTED IN THE APPROVED SHOP ORDER, SHALL PREVAIL. Unless otherwise specified, the proposed apparatus will be manufactured to the latest NFPA recommendations as well as other applicable federally regulated safety regulations. E-One reserves the right to engineer and incorporate design improvements and changes without notice, while adhering to the intent of the specification.

HALE QFLO 1250 GPM PUMP
0 TOTAL TANK VOLUME

HOSE LOADS :

	OPENING		INTERIOR DIMENSIONS				
COMPT.	WIDTH	HEIGHT	LOWER WIDTH	LOWER HEIGHT	LOWER DEPTH	UPPER HEIGHT	UPPER DEPTH
L1	40	60.75	42	30	26	38.75	26
L2	54	26.75	56	30	N/A	26.75	26
L3	54	60.75	56	30	26	38.75	26
R1	40	60.75	42	30	26	38.75	12
R2	54	26.75	56	30	N/A	26.75	12
R3	54	60.75	56	30	26	38.75	12
B1	36	45	38	30	26	24	N/A

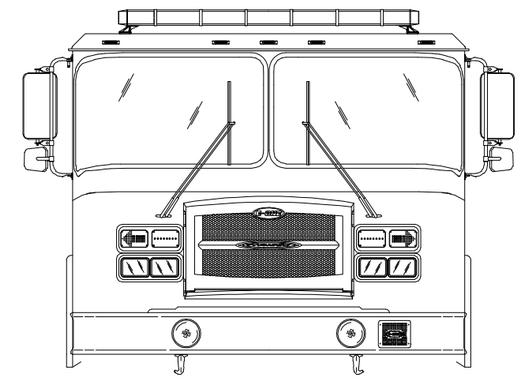

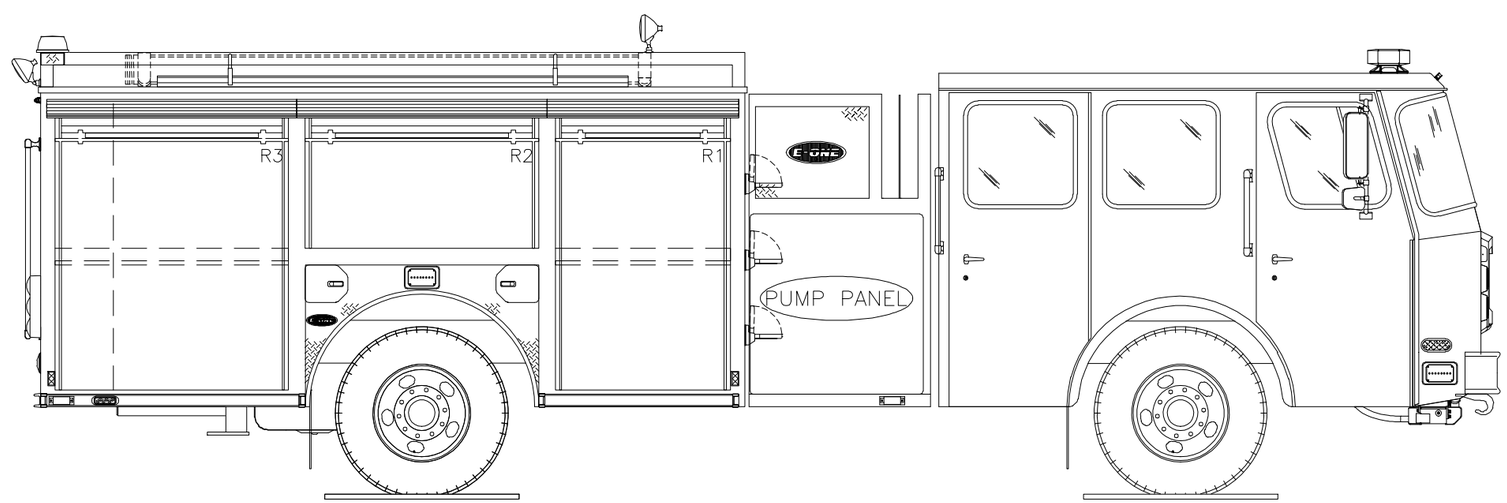

POWERED BY EZDRAW

1000	Commercial Chassis & Chassis Options	Price
1005-0154	Outer frameliner for International 4400 chassis.	$2,570
1005-0319	Frame Liner to be Provided by Commercial Chassis Supplier.	$1,073
1005-0505	M2 (2) door, 185" WB & 41" frame cut, front tow hooks, 12K & 23K axles, ABS brakes, radiator cooling sized for current emissions requirements, 50 gal. left hand fuel tank and 6 gal diesel exhaust fluid tank, EVS3000 transmission, (2) 1850CCA batteries, 275 alternator, ember separator, AC.	$80,211
1005-0506	M2 (2) door, 205" WB & 41" frame cut, front tow hooks, 12K & 23K axles, ABS brakes, radiator cooling sized for current emissions requirements, 50 gal. left hand fuel tank and 6 gal diesel exhaust fluid tank, EVS3000 transmission, (2) 1850CCA batteries, 275 alternator, ember separator, AC.	$80,478
1005-0507	M2 (2) door, 219" WB & 41" frame cut, front tow hooks, 12K & 23K axles, ABS brakes, radiator cooling sized for current emissions requirements, 50 gal. left hand fuel tank and 6 gal diesel exhaust fluid tank, EVS3000 transmission, (2) 1850CCA batteries, 275 alternator, ember separator, AC.	$81,406
1005-0508	M2 (4) door, 231" WB & 41" frame cut, front tow hooks, 14.6K & 23K axles, ABS brakes, radiator cooling sized for current emissions requirements, 50 gal. left hand fuel tank and 6 gal diesel exhaust fluid tank, EVS3000 transmission, (2) 1850CCA batteries, 275 alternator, ember separator, AC.	$91,518
1005-0509	M2 (4) door, 251" WB & 41" frame cut, front tow hooks, 14.6K & 23K axles, ABS brakes, radiator cooling sized for current emissions requirements, 50 gal. left hand fuel tank and 6 gal diesel exhaust fluid tank, EVS3000 transmission, (2) 1850CCA batteries, 275 alternator, ember separator, AC.	$91,620
1005-0510	M2 (4) door, 265" WB & 41" frame cut, front tow hooks, 14.6K & 23K axles, ABS brakes, radiator cooling sized for current emissions requirements, 50 gal. left hand fuel tank and 6 gal diesel exhaust fluid tank, EVS3000 transmission, (2) 1850CCA batteries, 275 alternator, ember separator, AC.	$90,185
1005-0511	M2 (2) door, 185" WB & 41" frame cut, front tow hooks, 12K & 26K axles, ABS brakes, radiator cooling sized for current emissions requirements, 50 gal. left hand fuel tank and 6 gal diesel exhaust fluid tank, EVS3000 transmission, (2) 1850CCA batteries, 275 alternator, ember separator, AC.	$84,457
1005-0512	M2 (2) door, 205" WB & 41" frame cut, front tow hooks, 12K & 26K axles, ABS brakes, radiator cooling sized for current emissions requirements, 50 gal. left hand fuel tank and 6 gal diesel exhaust fluid tank, EVS3000 transmission, (2) 1850CCA batteries, 275 alternator, ember separator, AC.	$84,735
1005-0513	M2 (2) door, 219" WB & 41" frame cut, front tow hooks, 12K & 26K axles, ABS brakes, radiator cooling sized for current emissions requirements, 50 gal. left hand fuel tank and 6 gal diesel exhaust fluid tank, EVS3000 transmission, (2) 1850CCA batteries, 275 alternator, ember separator, AC.	$85,652
1005-0514	M2 (4) door, 231" WB & 41" frame cut, front tow hooks, 14.6K & 26K axles, ABS brakes, radiator cooling sized for current emissions requirements, 50 gal. left hand fuel tank and 6 gal diesel exhaust fluid tank, EVS3000 transmission, (2) 1850CCA batteries, 275 alternator, ember separator, AC.	$95,718
1005-0515	M2 (4) door, 251" WB & 41" frame cut, front tow hooks, 14.6K & 26K axles, ABS brakes, radiator cooling sized for current emissions requirements, 50 gal. left hand fuel tank and 6 gal diesel exhaust fluid tank, EVS3000 transmission, (2) 1850CCA batteries, 275 alternator, ember separator, AC.	$95,820
1005-0516	M2 (4) door, 265" WB & 41" frame cut, front tow hooks, 14.6K & 26K axles, ABS brakes, radiator cooling sized for current emissions requirements, 50 gal. left hand fuel tank and 6 gal diesel exhaust fluid tank, EVS3000 transmission, (2) 1850CCA batteries, 275 alternator, ember separator, AC.	$95,820
1005-0517	M2 (2) door, 191" WB & 47" frame cut, front tow hooks, 12K & 26K axles, ABS brakes, radiator cooling sized for current emissions requirements, 50 gal. left hand fuel tank and 6 gal diesel exhaust fluid tank, EVS3000 transmission, (2) 1850CCA batteries, 275 alternator, ember separator, AC.	$84,724
1005-0518	M2 (2) door, 211" WB & 47" frame cut, front tow hooks, 12K & 26K axles, ABS brakes, radiator cooling sized for current emissions requirements, 50 gal. left hand fuel tank and 6 gal diesel exhaust fluid tank, EVS3000 transmission, (2) 1850CCA batteries, 275 alternator, ember separator, AC.	$85,652

1005-0519	M2 (2) door, 225" WB & 47" frame cut, front tow hooks, 12K & 26K axles, ABS brakes, radiator cooling sized for current emissions requirements, 50 gal. left hand fuel tank and 6 gal diesel exhaust fluid tank, EVS3000 transmission, (2) 1850CCA batteries, 275 alternator, ember separator, AC.	$85,652
1005-0520	M2 (4) door, 237" WB & 47" frame cut, front tow hooks, 14.6K & 26K axles, ABS brakes, radiator cooling sized for current emissions requirements, 50 gal. left hand fuel tank and 6 gal diesel exhaust fluid tank, EVS3000 transmission, (2) 1850CCA batteries, 275 alternator, ember separator, AC.	$95,718
1005-0521	M2 (4) door, 257" WB & 47" frame cut, front tow hooks, 14.6K & 26K axles, ABS brakes, radiator cooling sized for current emissions requirements, 50 gal. left hand fuel tank and 6 gal diesel exhaust fluid tank, EVS3000 transmission, (2) 1850CCA batteries, 275 alternator, ember separator, AC.	$95,820
1005-0522	M2 (4) door, 272" WB & 47" frame cut, front tow hooks, 14.6K & 26K axles, ABS brakes, radiator cooling sized for current emissions requirements, 50 gal. left hand fuel tank and 6 gal diesel exhaust fluid tank, EVS3000 transmission, (2) 1850CCA batteries, 275 alternator, ember separator, AC.	$95,820
1005-0523	M2 (2) door, 191" WB & 47" frame cut, front tow hooks, 12K & 23K axles, ABS brakes, radiator cooling sized for current emissions requirements, 50 gal. left hand fuel tank and 6 gal diesel exhaust fluid tank, EVS3000 transmission, (2) 1850CCA batteries, 275 alternator, ember separator, AC.	$80,478
1005-0524	M2 (2) door, 211" WB & 47" frame cut, front tow hooks, 12K & 23K axles, ABS brakes, radiator cooling sized for current emissions requirements, 50 gal. left hand fuel tank and 6 gal diesel exhaust fluid tank, EVS3000 transmission, (2) 1850CCA batteries, 275 alternator, ember separator, AC.	$81,406
1005-0525	M2 (2) door, 225" WB & 47" frame cut, front tow hooks, 12K & 23K axles, ABS brakes, radiator cooling sized for current emissions requirements, 50 gal. left hand fuel tank and 6 gal diesel exhaust fluid tank, EVS3000 transmission, (2) 1850CCA batteries, 275 alternator, ember separator, AC.	$81,406
1005-0526	M2 (4) door, 237" WB & 47" frame cut, front tow hooks, 14.6K & 23K axles, ABS brakes, radiator cooling sized for current emissions requirements, 50 gal. left hand fuel tank and 6 gal diesel exhaust fluid tank, EVS3000 transmission, (2) 1850CCA batteries, 275 alternator, ember separator, AC.	$91,518
1005-0527	M2 (4) door, 257" WB & 47" frame cut, front tow hooks, 14.6K & 23K axles, ABS brakes, radiator cooling sized for current emissions requirements, 50 gal. left hand fuel tank and 6 gal diesel exhaust fluid tank, EVS3000 transmission, (2) 1850CCA batteries, 275 alternator, ember separator, AC.	$91,620
1005-0528	M2 (4) door, 272" WB & 47" frame cut, front tow hooks, 14.6K & 23K axles, ABS brakes, radiator cooling sized for current emissions requirements, 50 gal. left hand fuel tank and 6 gal diesel exhaust fluid tank, EVS3000 transmission, (2) 1850CCA batteries, 275 alternator, ember separator, AC.	$91,620
1005-0544	International 4400 (2) door, 185" WB & 41" frame cut, front tow hooks, 12K & 23K axles, ABS brakes, radiator cooling sized for current emissions requirements, 50 gal right hand fuel tank, EVS3000 transmission, (3) 1950CCA batteries, 320 alternator, ember separator and AC.	$80,625
1005-0545	International 4400 (2) door, 205" WB & 41" frame cut, front tow hooks, 12K & 23K axles, ABS brakes, radiator cooling sized for current emissions requirements, 50 gal right hand fuel tank, EVS3000 transmission, (3) 1950CCA batteries, 320 alternator, ember separator and AC.	$80,790
1005-0546	International 4400 (2) door, 219" WB & 41" frame cut, front tow hooks, 12K & 23K axles, ABS brakes, radiator cooling sized for current emissions requirements, 50 gal right hand fuel tank, EVS3000 transmission, (3) 1950CCA batteries, 320 alternator, ember separator and AC.	$80,790
1005-0547	International 4400 (2) door, 185" WB & 41" frame cut, front tow hooks, 12K & 26K axles, ABS brakes, radiator cooling sized for current emissions requirements, 50 gal right hand fuel tank, EVS3000 transmission, (3) 1950CCA batteries, 320 alternator, ember separator and AC.	$82,650
1005-0548	International 4400 (2) door, 205" WB & 41" frame cut, front tow hooks, 12K & 26K axles, ABS brakes, radiator cooling sized for current emissions requirements, 50 gal right hand fuel tank, EVS3000 transmission, (3) 1950CCA batteries, 320 alternator, ember separator and AC.	$82,815
1005-0549	International 4400 (2) door, 219" WB & 41" frame cut, front tow hooks, 12K & 26K axles, ABS brakes, radiator cooling sized for current emissions requirements, 50 gal right hand fuel tank, EVS3000 transmission, (3) 1950CCA batteries, 320 alternator, ember separator and AC.	$82,815
1005-0550	International 4400 (4) door, 230" WB & 41" frame cut, front tow hooks, 14K & 23K axles, ABS brakes, radiator cooling sized for current emissions requirements, 50 gal right hand fuel tank, EVS3000 transmission, (3) 1950CCA batteries, 320 alternator, ember separator and AC.	$88,983

1005-0551	International 4400 (4) door, 230" WB & 41" frame cut, front tow hooks, 14K & 26K axles, ABS brakes, radiator cooling sized for current emissions requirements, 50 gal right hand fuel tank, EVS3000 transmission, (3) 1950CCA batteries, 320 alternator, ember separator and AC.	$91,125
1005-0552	International 4400 (4) door, 250" WB & 41" frame cut, front tow hooks, 14K & 26K axles, ABS brakes, radiator cooling sized for current emissions requirements, 50 gal right hand fuel tank, EVS3000 transmission, (3) 1950CCA batteries, 320 alternator, ember separator and AC.	$91,895
1005-0553	International 4400 (4) door, 264" WB & 41" frame cut, front tow hooks, 14K & 26K axles, ABS brakes, radiator cooling sized for current emissions requirements, 50 gal right hand fuel tank, EVS3000 transmission, (3) 1950CCA batteries, 320 alternator, ember separator and AC.	$92,432
1005-0554	International 4400 (2) door, 191" WB & 47" frame cut, front tow hooks, 12K & 23K axles, ABS brakes, radiator cooling sized for current emissions requirements, 50 gal right hand fuel tank, EVS3000 transmission, (3) 1950CCA batteries, 320 alternator, ember separator and AC.	$80,625
1005-0555	International 4400 (2) door, 211" WB & 47" frame cut, front tow hooks, 12K & 23K axles, ABS brakes, radiator cooling sized for current emissions requirements, 50 gal right hand fuel tank, EVS3000 transmission, (3) 1950CCA batteries, 320 alternator, ember separator and AC.	$80,790
1005-0556	International 4400 (2) door, 226" WB & 47" frame cut, front tow hooks, 12K & 23K axles, ABS brakes, radiator cooling sized for current emissions requirements, 50 gal right hand fuel tank, EVS3000 transmission, (3) 1950CCA batteries, 320 alternator, ember separator and AC.	$80,790
1005-0557	International 4400 (2) door, 191" WB & 47" frame cut, front tow hooks, 12K & 26K axles, ABS brakes, radiator cooling sized for current emissions requirements, 50 gal right hand fuel tank, EVS3000 transmission, (3) 1950CCA batteries, 320 alternator, ember separator and AC.	$82,650
1005-0558	International 4400 (2) door, 211" WB & 47" frame cut, front tow hooks, 12K & 26K axles, ABS brakes, radiator cooling sized for current emissions requirements, 50 gal right hand fuel tank, EVS3000 transmission, (3) 1950CCA batteries, 320 alternator, ember separator and AC.	$82,815
1005-0559	International 4400 (2) door, 226" WB & 47" frame cut, front tow hooks, 12K & 26K axles, ABS brakes, radiator cooling sized for current emissions requirements, 50 gal right hand fuel tank, EVS3000 transmission, (3) 1950CCA batteries, 320 alternator, ember separator and AC.	$82,815
1005-0560	International 4400 (4) door, 236" WB & 47" frame cut, front tow hooks, 14K & 23K axles, ABS brakes, radiator cooling sized for current emissions requirements, 50 gal right hand fuel tank, EVS3000 transmission, (3) 1950CCA batteries, 320 alternator, ember separator and AC.	$88,983
1005-0561	International 4400 (4) door, 236" WB & 47" frame cut, front tow hooks, 14K & 26K axles, ABS brakes, radiator cooling sized for current emissions requirements, 50 gal right hand fuel tank, EVS3000 transmission, (3) 1950CCA batteries, 320 alternator, ember separator and AC.	$91,125
1005-0562	International 4400 (4) door, 256" WB & 47" frame cut, front tow hooks, 14K & 26K axles, ABS brakes, radiator cooling sized for current emissions requirements, 50 gal right hand fuel tank, EVS3000 transmission, (3) 1950CCA batteries, 320 alternator, ember separator and AC.	$92,047
1005-0563	International 4400 (4) door, 270" WB & 47" frame cut, front tow hooks, 14K & 26K axles, ABS brakes, radiator cooling sized for current emissions requirements, 50 gal right hand fuel tank, EVS3000 transmission, (3) 1950CCA batteries, 320 alternator, ember separator and AC.	$92,432
1020-0010	Comm Chassis Prep E-1 Supp-FL.	$3,465
1020-0011	Comm Chas Prep E-1 Supp-Non FL.	$5,398
1020-0020	Chassis Prep M2 Cummins engine. Includes exhaust extension, rear tow eyes, high idle, master light switch, master battery switch, air inlet and battery charger receptacle.	$4,535
1020-0021	Chassis Prep Tradition. for an International Maxx Force Engine. Tradition.	$4,252
1025-0068	Driver Controlled Dif Lock. on chassis with 23,000 rear axle.	$608
1025-0069	Driver Controlled Dif Lock. on chassis with 26,000 rear axle.	$664
1050-0029	Front & rear axle wheel simulator kit. Includes stainless steel wheel simulator and center cap with E-ONE logo.	$1,906
1050-0035	Freightliner provided polished aluminum wheels.	$1,254
1050-0037	International chassis Rims Aluminum. Tradition.	$1,265
1060-0050	Tire pressure monitoring valve stem caps.	$182
1100-0047	Navistar ESP (ESC) Stability control system 4 x 2	$1,760
1110-0009	Air horns on hood pair. Requires control.	$653
1110-0010	Air inlet. To charge brake system. Commercial chassis only. Location: [#LOC].	$403
1110-0026	Air horns recessed in bumper (PR).	$895
1110-0060	Dual Grover Hood Mounted Air Horns with Driver and Officer Foot Switches to be Supplied and Installed by Freightliner. Tradition	$765
1110-0062	Dual Hadley Hood Mounted Air Horns with Driver and Officer Foot Switches to be Supplied and Installed by International.	$671
1110-0063	Dual Grover Hood Mounted Air Horns with Driver and Officer Foot Switches to be Supplied and Installed by International. Tradition	$765

1110-0075	Dual Stuttertone Hood Mounted Air Horns with Driver and Officer Foot Switches to be Supplied and Installed by Freightliner. Tradition	$765
1110-0078	Omit the Hood Mounted Air Horns and install the Air Horn plumbing only with Driver and Officer Foot Switches to be Supplied and Installed by Freightliner. Tradition	$765
1110-0080	Dual Hadley air horns mounted in front bumper extension. For use with driver and officer foot switches supplied and installed by International. Tradition	$369
1110-0081	Dual foot switches. Locate (1) driver and (1) officer. To be supplied by International. For use with E-ONE installed air horns in bumper extension.	$303
1110-0083	Dual Hadley Hood Mounted Air Horns with Driver Foot Switch and Center Dash Mounted Push Button to be Supplied and Installed by International. Tradition	$671
1110-0085	Bumper mounted Grover 21" air horns. Controls required and provided separately.	$942
1150-0055	Hinged diamond plate lid for center bumper tray. Includes 1/4 turn latch and gas shock hold open.	$322
1150-0061	Red vinyl lid with velcro fasteners for bumper tray center.	$191
1150-0064	Black vinyl lid with velcro fasteners for bumper tray center.	$191
1150-0121	Bumper tray center of bumper with slats 14 inches deep (approx 13 inches to slats).	$484
1150-0139	Nylon black strap with aluminum quick release buckle for front bumper hose tray. Strap to attach to front and rear walls of tray down low as applicable. Location: [#LOC].	$121
1150-0159	Bumper tray center of bumper with slats 16 inches deep (approx 15 inches to slats).	$484
1150-0164	Bumper tray center of bumper with black Turtle Tile 14" deep (approx. 13.25" from tile). Includes: hinged diamond plate lid for center bumper tray with Tri-Mark latch, gas shock hold open and door ajar switch.	$1,002
1150-0178	Hinged diamond plate lid for center bumper tray. Includes push button latch and gas shock hold open.	$322
1150-0180	Yellow vinyl lid with velcro fasteners for bumper tray center.	$191
1150-0184	Vinyl [#COL] side covers for diamond plate bumper crosslay cover.	$198
1150-0185	Hinged diamond plate lid for center bumper tray. Includes push button latch and moon spring hold open.	$322
1150-0195	Bumper tray center of bumper with black Turtle Tile 14" deep (approx. 13.25" from tile).	$484
1150-0197	Nylon black strap with aluminium quick release buckle. Location: driver, officer and center top of front bumper gravel shield.	$361
1150-0200	Bumper tray center of bumper with slats 18 inches deep (approx 17 inches to slats).	$484
1150-0206	Hinged diamond plate lid for center bumper tray. Includes push button latch chrome grab handle and gas shock hold open.	$375
1150-0207	Hinged diamond plate lid for center bumper tray. Includes 1/4 turn latch and moon spring hold open.	$322
1150-0214	Traffic cone storage on front bumper extension. Cones to be oriented downard through a 7 3/4" hole in the gravelshield. Includes nylon strap with aluminum buckle. Location: [#LOC].	$402
1150-0215	Hinged diamond plate lid for center bumper tray. Includes 1/4 turn latch and two (2) gas shock hold open.	$352
1150-0219	Additional gas shock on front bumper tray lid. Location: [#LOC].	$166
1150-0225	The rear wall of bumper tray to have louvers for additional ventilation. Location: [#LOC].	$188
1150-0227	Bumper tray center of bumper with slats 18 inches deep (approx 17 inches to slats).	$415
1150-0230	Bumper trough full length, mounted on top of gravel shield. Trough shall run side to side 4" high, 7" wide made from 3/16" smooth plate aluminum.	$259
1150-0231	Nylon black strap with aluminum quick release buckle for front bumper hose tray. Strap to attach to front and rear walls of tray as high as possible. Location: [#LOC].	$121
1160-0004	Stainless Steel 10" high front bumper. Requires extended front bumper.	$1,360
1160-0014	20" Front Bumper Gravel Shield Extension.	$520
1160-0082	Front bumper extension. For use with International 7000 Series 4x4 chassis. Total extension to be 20" including the OEM frame extension.	$520
1200-0085	International Maxx Force 310 HP engine.	$7,150
1200-0086	International Maxx Force DT570 330 HP engine.	$8,465
1200-0089	Cummins ISC 300 HP engine.	$8,220
1200-0090	Engine brake. Provided by the chassis OEM.	$2,016
1200-0091	Exhaust brake. Provided by the chassis OEM.	$561
1200-0092	Freightliner Cummins ISC 330 HP engine.	$9,424
1200-0109	Cummins ISC 300 HP engine.	$6,600
1200-0110	Freightliner Cummins ISC 330 HP engine.	$8,325
1200-0112	International Maxx Force 9 310 HP engine.	$7,150
1200-0113	International Maxx Force 9 330 HP engine.	$8,465
1200-0127	Cummins Turbo Exhaust Brake. Provided by chassis OEM	$157
1200-0130	Turbo exhaust brake. Provided by the chassis OEM.	$161

1200-0136	Freightliner Cummins ISC 300 HP engine.	$14,630
1200-0138	Freightliner Cummins ISC 330 HP engine.	$16,355
1200-0139	International Maxx Force 9 330 HP engine.	$15,065
1200-0141	International Maxx Force 9 315 HP engine.	$13,750
1200-0150	Freightliner Cummins ISC 350 HP engine.	$16,734
1200-0208	Compression brake. Provided by the chassis OEM.	$1,258
1250-0011	Rear underbody support frame.	$619
1250-0028	Rear heavy duty underbody support frame.	$1,656
1510-0108	Universal 911 Seating Package. Includes one (1) hi-back air ride suspension driver seat, one (1) hi-back fixed SCBA officer seat, and three (3) fixed SCBA rear seats. Tradition.	$2,195
1510-0110	Bostrom Seating Package. Includes one (1) air ride driver seat, one (1) fixed SCBA officer seat and (3) fixed SCBA rear seats. Tradition.	$2,143
1510-0111	Seating Package Two (2) Door Freightliner. Includes One (1) Talladega 910 Hi-Back Air Ride Driver and One (1) 911 Fixed Officer (Non-SCBA).	$153
1510-0114	Seating Package Two (2) Door International. Includes One (1) Nat'l Brand Air Ride Driver and One (1) Nat'l Brand Air Ride Officer (Non-SCBA).	$125
1510-0117	Bostrom SecureAll mechanical air pack bottle bracket (EA). Location: [#LOC].	$565
1510-0125	Seating Package Two (2) Door International. Includes One (1) Bostrom Sierra 140 high back air suspended Driver seat and (1) Bostrom Tanker 400 ct non suspended SCBA Officer seat.	$600
1510-0151	Universal air pack bottle bracket installed (EA).	$162
1510-0199	Seating Package Two (2) Door International. Includes One (1) Nat'l Brand Air Ride Driver and One (1) Seats Inc. (Universal Series) high back fixed SCBA.	$758
1510-0203	Bracket SCBA Lifeguard SmartDock Gen2 restraint system. Location: [#LOC].	$526
1510-0253	Bostrom SecureAll mechanical air pack bottle bracket (EA). SecureAll factory adjusted to accommodate carbon fiber bottle(s) in mounted location(s) as specified. Location: [#LOC].	$565
1540-0002	Map storage box.	$1,431
1540-0059	Map box in cab between forward seats. Includes mounting area for traffic advisor (if optioned) and siren control head (other electrical items and switches will be located in standard locations), sanded finish with black top surface material and hinged area at rear with two storage slots.	$2,173
1540-0062	Map Box. Locate between the driver and officer. Box to have a sanded finish with a black top. Rear area to be hinged forward with a single push button latch (ref #655283). Re-locate the NFPA siren and switches to the map (the standard locations for the dash for these items will have cover plates installed).The multi-plex screen is to remain dash area mounted	$3,439
1670-0025	Freightliner West Coast heated cab mirrors with remote control. Tradition.	$255
1670-0027	International West Coast Mirrors Heated with clearance lghts.	$61
1670-0029	International West Coast heated mirrors with clearance lights and remote control.	$165
1675-0149	The battery charger receptacle mounting plate shall be fabricated using 3/16" aluminum smooth plate. It shall be painted to match cab two tone job colors and align with the paint break as mounted.	$147
1675-0155	Painted visor for International 4400 cab. Option 16XWD.	$209
1675-0157	The exterior lower rear of the commercial cab to have a diamond plate overlay. For use with a top mount application.	$174
1680-0011	Tow eyes rear below body, painted.	$650
1680-0042	Tow hooks front painted in the down position.	$293
1680-0060	Deluxe Trim Pkg 4DR Navistar.	$4,582
1680-0102	Two (2) hood-mounted air horns with driver and officer mounted foot switches. International. Tradition.	$697
1680-0103	One (1) air horn mounted on the driver side hood with driver and officer mounted foot switches. International.	$583
1680-0104	OEM chassis step package for Freightliner M2 106 and 112 series. Includes mounting plate for the battery charger receptacle and air inlet.	$155
1680-0105	AM/FM radio with weather band and CD player. Freightliner. Tradition.	$430
1680-0106	OEM chassis step package for International 4000 and 7000 series. Includes mounting plate for the battery charger receptacle and air inlet.	$164
1680-0107	Diamond plate trim package for a (2) door International. Includes a full length driver side and an officer side trim that will utilize pieces already supplied by the OEM.	$1,401
1680-0109	AM/FM Radio with Weather band and CD Player. International. Tradition.	$462
1680-0110	Chassis Trim Package for a (2) door Freightliner.	$1,401
1680-0111	Chassis Trim Package for a (4) door Freightliner.	$2,801
1680-0112	Freightliner commodity surcharge	$1,087
1680-0113	International commodity surcharge	$895
1680-0114	Diamond plate trim package for a (4) door International. Includes a full length driver side and a (2) piece officer side trim that will utilize pieces already supplied by the OEM.	$2,801

1680-0128	The commercial chassis to have seat belt and chassis pre-wiring for NFPA seating indicator and vehicle data recorder.	$267
1680-0129	The commercial chassis to have seat belt and chassis pre-wiring for NFPA seating indicator and vehicle data recorder.	$547
1680-0155	International 7400 Model Year Surcharge only	$1,238
1680-0157	International 4400 2011 Model Year Surcharge Only	$1,036
1680-0158	Diamond plate trim package for a (2) door International extended cab. Includes a full length driver side and an officer side trim that will utilze pieces already supplied by the OEM.	$2,195
1680-0187	On-Spot tire chain installation. Requires pre-wire option located in Cab Electrical.	$2,977
1680-0192	Forward facing under front bumper winch receiver. Includes lowered height for center bumper mounted tray depth and electrical connection for portable winch application. Commercial chassis only.	$1,959
1680-0193	Tow eyes rear below body stainless steel.	$2,153
1680-0198	International 4400 and 7400 series chassis raw material surcharge.	$660
1680-0199	International 7600 series chassis raw material surcharge.	$990
1680-0200	Diamond plate trim package for a (2) door International with driver's side fuel tank and Officer's side battery storage. Includes a full length driver side and an officer side trim that will utilize pieces already supplied by the OEM.	$1,401
1680-0219	Diamond plate trim package for a (2) door International. Includes a driver side trim that will utilize pieces already supplied by the OEM and a full length officer side.	$1,401
1680-0231	Insta-chain tire chain installation. Requires pre-wire option located in Cab Electrical.	$2,977
1680-0236	Chassis Trim Package for a (2) door extended Freightliner.	$2,119
1680-0237	Deluxe Trim Package 2DR Extended Cab International.	$4,293
1680-0241	AM/FM Radio, International Tradition.	$292
1685-0070	Lanyard "Y" control. Chassis mounted air horn(s). Commercial chassis.	$173
1685-0191	Diamond plate cover for battery charger/air compressor. Includes louvers for ventilation.	$238
1685-0235	Foot switch Linemaster model 632S to control air horns located [#LOC]. Includes 25 degree diamond plate bracket.	$124
1685-0265	Smooth plate cover(s) for battery charger and air compressor. These cover's shall be painted to match cab interior and shall include louvers as required for ventilation.	$238
1750-0018	Battery charger, Super Smart, 20 amp with 120V Kussmaul air compressor.	$1,695
1750-0019	Battery charger Super Smart 110 volt, 20 amp.	$439
1750-0024	Auto-Eject receptacle inlet 20 amp located [#LOC] with a [#COL] cover.	$601
1750-0029	Switch horn button two position DOT/air horn.	$103
1750-0030	Switch horn button two position DOT/electronic siren.	$103
1750-0031	Switch horn button two position DOT/Q2B.	$103
1750-0034	Switch, additional 12 volt/15 amp. Location and function: [#LOC].	$211
1750-0047	The chassis shall be pre-wired for installation of tire chains.	$446
1750-0059	Receptacle inlet 20 amp with a [#COL] cover. Location: [#LOC].	$303
1750-0082	12V power distribution module. Includes (6) battery hot and (6) switched hot circuits. 100 amps max (IATS). Location: [#LOC].	$326
1750-0158	Dome Lts Red/White LED. Package includes two lights mounted in the front and two mounted in the rear of the cab. White light wired through door and light assembly switch. Red light through light assembly switch.	$849
1750-0211	OEM Supplied Wig-Wag Headlights. IH OEM Code 60AKK	$262
1750-0224	Engine Compartment Light LED for Freightliner Chassis (EA).	$254
1750-0225	Engine Compartment Light for Freightliner Chassis (EA).	$134
1750-0232	Incandescent Red/White domes and upper NFPA step lighting. Package includes two lights mounted in the front and two mounted in the rear of the cab. White light wire through door and light assembly mounted switch. Red light through light assembly mounted switch. Upper cab step areas to have for NFPA incandescent step lighting. Step lighting to be positioned per OEM recommendations for best compliance to NFPA.	$743
1750-0259	Fog Lights Clear Lens (PR) located middle hole of bumper.	$110
1750-0284	Switch additional guarded toggle. Location and Function: [#LOC].	$211
1750-0316	Switch horn button two position DOT/Rumbler.	$103
1750-0325	Pigtail, minimum of 18" of wire for service of the battery charger and air compressor.	$50
1750-0353	Dome Lts Red/White LED. Package includes two lights mounted in the front and three mounted in the rear of the cab. White light wired through door and light assembly switch. Red light through light assembly switch.	$1,081
1750-0359	(Obsolete from vendor)Dome Lts Red/White Whelen LED. Package includes two lights mounted in the front and two mounted in the rear of the cab. White light wire through door and light assembly switch. Red light through light assembly switch.	$1,698

1750-0369	On-Spot activation switch shall have a red flip up safety guard. The switch shall de located on the driver side overhead panel offset to the officer side as far as possible.	$53
1000	**Custom Chassis & Chassis Options**	
1025-0004	Meritor FL941 front axle 18,000 lb.	$10,303
1025-0005	Meritor FL941 front axle 18,700 lb.	$15,452
1025-0016	Meritor RS-24-160 single rear axle 24,000 lb. capacity.	$10,303
1025-0017	Meritor RS-25-160 single rear axle 27,000 lb. capacity.	$11,533
1025-0027	Driver controlled rear differential.	$734
1025-0029	Front shock absorbers.	$171
1025-0089	Meritor RS-26-185 single rear axle 27,000lb capacity	$12,877
1025-0120	Driver controlled rear differential. Includes guarded toggle switch located on driver side diagnostic panel.	$734
1025-0127	Meritor FL941 front axle 18,000 lb with multi-leaf front springs.	$10,676
1050-0000	Steel wheels for front axle (2).	$301
1050-0001	Alcoa aluminum wheels for front axle (2).	$1,628
1050-0002	Steel wheels for rear axle (4).	$598
1050-0003	Alcoa aluminum wheels for rear axle (4).	$3,251
1050-0007	Front axle wheel trim kit. Includes stainless steel lug nut covers (chrome plated plastic if applicable) and center cap with E-ONE logo. Note: Center cap will have an inspection port IPO a logo if equipped with Stemco oil seals.	$217
1050-0008	Rear axle (single) wheel trim kit. Includes stainless steel lug nut covers (chrome plated plastic if applicable) and center cap with E-ONE logo. E-ONE custom chassis w/steel wheels will have chrome plated plastic lug covers.	$268
1050-0031	Front axle wheel simulator kit. Includes stainless steel wheel simulator and center cap with E-ONE logo. Note: Center cap will have an inspection port IPO a logo if equipped with Stemco oil seals.	$523
1050-0032	Rear axle (single) wheel simulator kit. Includes full stainless steel wheel simulators with integrated lug nut covers and E-ONE logo.	$763
1050-0042	Two heavy duty steel wheels for front axle. For use with 21.5K and greater ratings only.	$1,537
1050-0043	Rear axle (tandem) wheel simulator kit. Includes full stainless steel wheel simulators with integrated lug nut covers and E-ONE logo.	$1,526
1050-0044	Accuride aluminum wheels for front axle (2).	$1,581
1050-0045	Accuride aluminum wheels for rear axle (4).	$3,156
1050-0047	Front axle wheel trim kit. Includes stainless steel "Cover-Up" covers with E-ONE logo. Not available with Stemco oil seals.	$280
1050-0048	Rear axle (single) Wheel Trim kit. Includes stainless steel "Cover-Up" covers with E-ONE logo. Not available with Stemco oil seals.	$359
1050-0070	Accuride aluminum wheels outer and steel inner for rear axles (4).	$1,877
1060-0001	Two Michelin 315 tires model XZA-1 for front axle.	$1,315
1060-0004	Four Michelin 11R tires model XZE2 highway tread for rear axle.	$2,129
1060-0005	Four Michelin 12R tires model XZE highway tread for rear axle.	$2,465
1060-0015	Four Michelin 11R rear tires with XDN2 mud and snow tread.	$2,579
1060-0016	Four Michelin 12R rear tires with XDN2 mud and snow tread.	$2,914
1060-0047	Two Michelin 385 tires model XFE for front axle.	$1,359
1060-0050	Tire pressure monitoring valve stem caps.	$150
1060-0060	Two Michelin 315 tires model XZY3 for front axle.	$1,045
1060-0061	Four Michelin 12R rear tires with Mud and Snow XDS tread	$2,914
1060-0098	Two Bridgestone 315 tires model M860 for front axle.	$2,259
1060-0099	Four Bridgestone 12R tires model R250F highway tread for rear axle.	$3,691
1070-0001	Rear suspension springs rated equal to the capacity of the axle.	$1,234
1100-0000	16-1/2" x 6" S-cam brakes with ArvinMeritor automatic slack adjusters for front axle.	$282
1100-0001	Meritor EX225H 17" disc brakes for front axle.	$1,101
1100-0002	ArvinMeritor 16-1/2" x 7" S-cam brakes with cast brake drums for a single rear axle.	$282
1100-0003	Meritor EX225H 17" disc brakes for rear axle, maximum capacity 27,000 lbs.	$1,101
1100-0005	Brake system air 4X2/4X4.	$7,449
1100-0011	Roll Stability Control, Includes ATC. Not available on commercial chassis, tiller or tandem axle custom chassis.	$1,782
1100-0018	Dust Shields. Front and Rear Axle. CAM Brakes only.	$328
1100-0020	Compression fittings for all air brake system lines. Includes cab interior air lines as applicable.	$1,102
1100-0024	G4 Electronic Stability Control (4x2), Includes RSC and ATC. Not available on 4x4, commercial chassis or tiller.	$3,135
1110-0000	Inlet for air system. Location: [#LOC].	$333
1110-0002	Air dryer Bendix AD-9.	$434

1110-0004	Air tank drains w/pull cords.	$380
1110-0005	Automatic moisture ejectors, heated.	$378
1110-0011	Air intake restriction gauge.	$232
1110-0012	Air outlet off front ACC tank. It shall be located [#LOC].	$333
1110-0026	Air horns recessed in bumper (PR).	$741
1110-0027	Isolated air tank. Includes pressure protection valve.	$503
1110-0041	Air horns Grover recessed in bumper (PR).	$903
1110-0044	Air inlet Auto-Eject. Includes [#COL] weatherproof gasketed cover. Location: [#LOC].	$429
1110-0046	Kussmaul 12V Auto Drain. For use with Kussmaul air compressor.	$419
1110-0058	Air horns recessed in bumper (PR) with bells behind bumper.	$794
1110-0095	Automatic moisture ejector, heated. Wet tank only.	$162
1110-0097	Automatic moisture ejector, non-heated (EA).	$124
1110-0106	Air horns Grover recessed behind bumper (PR). Includes E-ONE grilles on bumper.	$1,095
1110-0109	Air hose routed from the compressor to the dryer shall be upgraded to include stainless steel mesh for the full length of hose.	$69
1110-0116	Air horns Buehl recessed in bumper (PR).	$940
1125-0002	Jacobs engine compression brake.	$1,570
1125-0016	Allison transmission retarder.	$10,274
1125-0018	Compression brake for MAXXFORCE engines.	$1,570
1150-0055	Hinged diamond plate lid for center bumper tray. Includes 1/4 turn latch and gas shock hold open.	$267
1150-0061	Red vinyl lid with velcro fasteners for bumper tray center.	$158
1150-0064	Black vinyl lid with velcro fasteners for bumper tray center.	$158
1150-0065	Diamond plate lid for driver, center, and officer hose trays. 5.25" high with dual chrome grab handles, rubber hood latches and gas shocks.	$523
1150-0097	Tray driver side bumper outboard for hydraulic/cord reel.	$609
1150-0098	Tray officer side bumper outboard for hydraulic/cord reel.	$609
1150-0107	Nylon black strap with clip release on officer side front bumper tray.	$122
1150-0109	Nylon black strap with clip release on center front bumper tray. The strap shall be attached to the inboard side of the tray and shall not reduce the overall tray capacity	$122
1150-0120	Bumper tray center of bumper with slats 12 inches deep (approx 11 inches to slats).	$400
1150-0121	Bumper tray center of bumper with slats 14 inches deep (approx 13 inches to slats).	$400
1150-0126	Divider center bumper hose tray running side to side with adjustable track (Provides two storage areas, one ahead and one behind divider).	$210
1150-0139	Nylon black strap with aluminum quick release buckle for front bumper hose tray. Strap to attach to front and rear walls of tray down low as applicable. Location: [#LOC].	$100
1150-0158	Bumper tray center of bumper without slats 12 inches deep.	$273
1150-0163	Tray officer side bumper next to front intake. Half moon style for 25' of 5" rolled hose.	$579
1150-0178	Hinged diamond plate lid for center bumper tray. Includes push button latch and gas shock hold open.	$267
1150-0180	Yellow vinyl lid with velcro fasteners for bumper tray center.	$158
1150-0181	Nylon black strap with aluminum quick release buckle for front bumper hose tray. Strap to attach to side walls of tray down low as applicable. Location: [#LOC].	$100
1150-0184	Vinyl [#COL] side covers for diamond plate bumper crosslay cover.	$164
1150-0185	Hinged diamond plate lid for center bumper tray. Includes push button latch and moon spring hold open.	$267
1150-0187	Nylon yellow strap with aluminium quick release buckle for front bumper hose tray. Strap to attach to front and rear walls of tray down low as applicable. Location: [#LOC].	$100
1150-0196	Tray officer side bumper next to front intake. Half moon style for 20' of 6" rolled hose.	$579
1150-0197	Nylon black strap with aluminium quick release buckle. Location: driver, officer and center top of front bumper gravel shield.	$298
1150-0206	Hinged diamond plate lid for center bumper tray. Includes push button latch chrome grab handle and gas shock hold open.	$310
1150-0207	Hinged diamond plate lid for center bumper tray. Includes 1/4 turn latch and moon spring hold open.	$267
1150-0210	Tray driver side bumper next to frame. Half moon style for 25' of 5" rolled hose.	$579
1150-0212	Nylon black strap with clip release on officer side front bumper tray running front to back.	$122
1150-0214	Traffic cone storage on front bumper extension. Cones to be oriented downard through a 7 3/4" hole in the gravelshield. Includes nylon strap with aluminum buckle. Location: [#LOC].	$332
1150-0215	Hinged diamond plate lid for center bumper tray. Includes 1/4 turn latch and two (2) gas shock hold open.	$291
1150-0218	Bumper tray center of bumper with slats 12 inches deep (approx 11 inches to slats). Mount tray 1" above gravel shield.	$480

1150-0219	Additional gas shock on front bumper tray lid. Location: [#LOC].	$137
1150-0220	Tray driver side bumper outboard for hydraulic/cord reel, 18 inches deep IPOS.	$743
1150-0221	Tray officer side bumper outboard for hydraulic/cord reel, 18 inches deep IPOS.	$743
1150-0225	The rear wall of bumper tray to have louvers for additional ventilation. Location: [#LOC].	$156
1150-0230	Bumper trough full length, mounted on top of gravel shield. Trough shall run side to side 4" high, 7" wide made from 3/16" smooth plate aluminum.	$214
1150-0231	Nylon black strap with aluminum quick release buckle for front bumper hose tray. Strap to attach to front and rear walls of tray as high as possible. Location: [#LOC].	$100
1150-0236	Recessed bumper double crosslay to hold of 200' of 1.75" DJ hose in each crosslay. The crosslay floor/bottom shall be slotted to allow drainage (no slats). Includes hinged bi-fold raised lid in center with outboard fixed panels for optional equipment and stainless steel scuff guards at each side of crosslay opening across bottom and sides. Requires 28" extension, side covers, 12" heavy duty bumper and engineering approval.	$3,279
1160-0000	Bumper 10" stainless steel.	$1,126
1160-0014	20" Front Bumper Gravel Shield Extension.	$430
1160-0016	28" Front Bumper Gravel Shield Extension.	$690
1160-0041	Heavy duty front bumper 10" high with full wrap around. To be painted job color.	$1,975
1200-0020	TransSynd synthetic transmission fluid for EVS3000.	$168
1200-0083	Transmission re-programming. "D" allows transmission to shift from 1st - 4th gear, and "Mode" allows 5th gear.	$596
1200-0233	Eng/Trans Cummins ISL 330HP/EVS3000 2013 EPA compliant engine.	$68,884
1200-0234	Eng/Trans Cummins ISL 350HP/EVS3000 2013 EPA compliant engine.	$71,357
1200-0235	Eng/Trans Cummins ISL 400HP/EVS3000 2013 EPA compliant engine.	$83,052
1200-0236	Eng/Trans Cummins ISL 450HP/EVS3000 2013 EPA compliant engine.	$83,770
1225-0020	Exhaust tip MagneGrip. For exhaust extraction system. Tip to protrude appox. 2" outside of body (Not rubrail).	$565
1225-0024	Plymovent Grabber magnetic exhaust end. Bolt-on for exhaust extraction system.	$377
1250-0006	Frame liner 9.375 x 3.125 x .375.	$2,694
1250-0011	Rear underbody support frame.	$512
1250-0015	Frame assembly to include 176" wheelbase and 41" framecut.	$15,921
1250-0016	Frame assembly to include 196" wheelbase and 41" framecut.	$15,921
1250-0017	Frame assembly to include 210" wheelbase and 41" framecut.	$15,921
1250-0018	Frame assembly to include 182" wheelbase and 47" framecut.	$15,921
1250-0019	Frame assembly to include 202" wheelbase and 47" framecut.	$15,921
1250-0020	Frame assembly to include 216" wheelbase and 47" framecut.	$15,921
1250-0028	Rear heavy duty underbody support frame.	$1,370
1250-0030	Frame assembly to include 220" wheelbase and 41" framecut.	$15,921
1250-0031	Frame assembly to include 206" wheelbase and 41" framecut.	$15,921
1250-0032	Frame assembly to include 186" wheelbase and 41" framecut.	$15,921
1250-0033	Frame assembly to include 220" wheelbase and 41" framecut.	$15,921
1250-0034	Frame assembly to include 192" wheelbase and 47" framecut.	$15,921
1250-0035	Frame assembly to include 212" wheelbase and 47" framecut.	$15,921
1250-0036	Frame assembly to include 226" wheelbase and 47" framecut.	$15,921
1250-0061	Frame liner "L" 8.875 x 3.125 x .375.	$2,500
1350-0003	Fuel system 50 gallon.	$1,338
1350-0005	Fuel system 65 gallons.	$1,413
1350-0011	Fuel pump electric w/re-prime.	$370
1350-0012	Fuel shut-off valve. Location: [#LOC].	$94
1350-0013	Racor fuel/water separator to be a bottom drop out style. Shall include indicator light and audible alarm.	$645
1350-0014	Thermal control in-line fuel heater.	$429
1350-0037	Fuel system w/65 gallon stainless steel tank.	$2,483
1350-0043	Fuel system w/50 gallon stainless steel tank.	$2,281
1350-0048	Fuel system 100 gallons. Tank located above framerails to rear of cab.	$2,025
1350-0049	Fuel system 85 gallons. Tank located above framerails to rear of cab.	$2,025
1400-0002	Battery four group 31 1000 CCA.	$886
1400-0011	Battery splash cover for ULC compliance.	$267
1400-0024	Jumper studs to be located below driver's side front corner of body (or pump module if equipped). Studs to face down with positive stud outboard.	$188
1400-0032	Battery five group 31 1000 CCA (two left / three right). For use with below cab DEF tank only.	$1,107
1400-0033	Heater pads for (4) Group 31 battery system. Wire pads to block heater receptacle.	$905
1400-0040	Battery set additional two group 31 1000 CCA. Location: [#LOC].	$490

1400-0042	Jumper studs to be located below driver's side front corner of body (or pump module if equipped). Studs to face outboard.	$188
1510-0000	Seat cavity covers.	$154
1510-0035	Universal air pack bottle bracket (EA). Location: [#LOC].	$134
1510-0038	Driver seat 911 air ride.	$826
1510-0040	Officer seat to be 911 air ride	$826
1510-0041	Officer seat 911 air ride SCBA.	$983
1510-0042	Officer seat to be 911 fixed SCBA.	$803
1510-0043	Driver seat to be Bostrom air ride.	$915
1510-0045	Officer seat to be Bostrom air ride.	$915
1510-0046	Officer seat to be Bostrom air ride SCBA.	$1,062
1510-0047	Officer seat to be Bostrom fixed SCBA.	$888
1510-0048	Driver seat to be 911 electric	$1,234
1510-0050	Rear facing 911 seat with SCBA driver's side.	$690
1510-0053	Rear facing 911 seat with SCBA officer's side.	$690
1510-0054	Rear facing Bostrom seat with SCBA driver's side.	$665
1510-0057	Rear facing Bostrom seat with SCBA officer's side.	$665
1510-0058	Fold down 911 seat located [#LOC]	$370
1510-0062	Two man bench centered on rear wall with 911 SCBA backs.	$1,177
1510-0063	Two man bench centered on rear wall with Bostrom SCBA.	$1,451
1510-0082	Zico Quic-Hold mechanical air pack bottle bracket for 5" bottle (ea). Model MWAB with adjustable footplate and pull release strap. Location: [#LOC].	$487
1510-0091	Zico Quic-Hold mechanical air pack bottle bracket (EA). Model QLM-U-OPR with adjustable footplate and pull release. Location: [#LOC].	$589
1510-0100	Padded headrest for fold down jump seat (EA). Not available with rear wall windows.	$107
1510-0116	Fold-down seat located [#LOC].	$369
1510-0117	Bostrom SecureAll mechanical air pack bottle bracket (EA). Location: [#LOC].	$468
1510-0122	Fold down seat with 911 SCBA back located [#LOC].	$821
1510-0123	Fold down seat with Bostrom SCBA back located [#LOC].	$834
1510-0126	CrewGuard occupant seating detection system. Display location: [#LOC].	$3,040
1510-0127	Additional CrewGuard display. Location: [#LOC].	$242
1510-0131	Bostrom SecureAll mechanical air pack bottle bracket (EA) for bench / fold-down seat. Location: [#LOC].	$574
1510-0138	Two man bench centered on rear wall with (1) 911 SCBA back driver and (1) bench back cushion officer.	$1,034
1510-0144	FlameFighter model 14000 air pack bottle bracket with model 39015 safety strap (EA). Location: [#LOC]	$201
1510-0148	Rear facing 911 attendant seat driver's side.	$581
1510-0149	Rear facing 911 attendant seat officer's side.	$581
1510-0150	Two man bench centered on rear wall with (1) Bostrom SCBA back officer and (1) bench back cushion driver.	$1,309
1510-0203	Bracket SCBA Lifeguard SmartDock Gen2 restraint system. Location: [#LOC].	$435
1510-0204	Officer seat to be 911 electric SCBA	$1,736
1510-0206	Zico electric hands-free air pack bottle bracket (EA). Model QM-ELB with adjustable footplate. Bracket release will be activated with park brake. Location: [#LOC].	$632
1510-0209	Driver seat to be 911 attendant. Includes forward and aft adjustment.	$581
1510-0228	Three man bench center on rear wall with 911 SCBA backs. Includes provision for rear heaters mounted below bench (if equipped).	$2,548
1510-0243	Two (2) Bostrom SCBA seat backs and a three (3) person bench (no center position).	$1,877
1510-0253	Bostrom SecureAll mechanical air pack bottle bracket (EA). SecureAll factory adjusted to accommodate carbon fiber bottle(s) in mounted location(s) as specified. Location: [#LOC].	$468
1510-0254	Bostrom SecureAll mechanical air pack bottle bracket (EA) for bench / fold-down seat. SecureAll factory adjusted to accommodate carbon fiber bottle(s) in mounted location(s) as specified. Location: [#LOC].	$574
1515-0017	Air conditioning for the Typhoon X, CII X and Quest with Cummins ISC/ISL engine, radiator mounted condenser.	$5,847
1515-0029	Air conditioning for the TyphoonX, CII X and Quest with Cummins ISC or ISL, roof top mounted condensor.	$6,829
1515-0038	Air hose routed from the compressor to the dryer shall be upgraded to include stainless steel mesh for the full length of hose.	$69
1520-0012	Typhoon X long cab with 67.5" CA	$31,263
1520-0013	Typhoon X medium cab with 58" CA	$29,026
1520-0021	Typhoon X long cab with 67.5" CA. Includes barrier style doors.	$31,950

1535-0002	Driver side cab wheel well medical cabinet approximately 42 x 22 (25 Quest) x 28. Includes external locking roll-up door and interior hinged door with locking push-button latch. Cabinet includes (2) adjustable shelves.	$1,804
1535-0003	Officer side cab wheel well medical cabinet approximately 42 x 22 (25 Quest) x 28. Includes external locking roll-up door and interior hinged door with locking push-button latch. Cabinet includes (2) adjustable shelves.	$1,804
1535-0005	Medical cabinet mounted on rear wall of cab 48 x 40 x 20 with locking roll up door. Lower door opening raised to provide hand clearance.	$3,515
1535-0032	All medical cabinet RUD in the cab to be locking with 1250 key	$121
1535-0073	Officer side cab wheel well medical cabinet approximately 42 x 22 (25 Quest) x 28. Includes external locking pan door painted job color and interior hinged full height door with locking push-button latch. Cabinet includes (2) adjustable shelves.	$2,164
1535-0130	Driver side cab wheel well medical cabinet approximately 42 x 22 (25 Quest) x 28. Includes external locking roll-up door and interior hinged door with locking push-button latch; hinged outboard. Cabinet includes (2) adjustable shelves.	$1,804
1535-0131	Driver side cab wheel well medical cabinet approximately 42 x 24 (27 Quest) x 28. Includes external locking roll-up door and interior hinged door with locking push-button latch. Cabinet includes (2) adjustable shelves.	$1,804
1535-0132	Officer side cab wheel well medical cabinet approximately 42 x 24 (27 Quest) x 28. Includes external locking roll-up door and interior hinged door with locking push-button latch. Cabinet includes (2) adjustable shelves.	$1,804
1535-0133	Cab medical/storage cabinet(s) interior finish to be Zolatone gray.	$321
1535-0148	All medical cabinet RUD in the cab to be locking with GEM key lock	$121
1535-0156	Medical cabinet rear engine cover, bolted to forward facing map box approximately 34Wx25Hx18D. To include one (1) adjustable shelf. Two (2) vertically hinged swing out doors shall allow access (to the rear), the doors shall be raised 6" up from the cabinet's base. The cabinet shall include push-button latching, (2) each door (1) top and (1) bottom.	$1,254
1535-0167	Compartment rear side of cab below floor. Approx 9W x 19.5H opening. Includes double pan hinged doors. Long cab with medium door location only. Location: driver and officer side.	$828
1535-0186	Medical cabinet mounted on rear wall of cab 48 x 40 x 17 with locking roll up door. Lower door opening raised to provide hand clearance.	$3,515
1535-0187	Driver side cab wheel well medical cabinet approximately 42 x 24 (25 Quest) x 28. Includes external locking roll-up door and interior hinged door with locking push-button latch. Cabinet includes (2) adjustable shelves.	$1,804
1535-0188	Officer side cab wheel well medical cabinet approximately 42 x 24 (25 Quest) x 28. Includes external locking roll-up door and interior hinged door with locking push-button latch. Cabinet includes (2) adjustable shelves.	$1,804
1535-0190	All shelves within the medical cabinet(s) shall have the a full perimeter lip IPOS.	$55
1535-0192	The interior medical cabinet shall include stainless steel trim on the vertical corner of the cabinet where the hinge is attached. The trim shall run full height of the cabinet on this corner. The trim shall be 1" x 1" to protect and dress off this single corner's edge.	$181
1540-0006	Map box suspended with drop-down doors.	$506
1540-0026	Locking map box door. Map box door to include a locking push-button latch. Key type to be CH751.	$70
1540-0040	Map box suspended with drop down doors. 34"W x 10"H x 12"D	$506
1540-0049	Map box suspended with drop down doors. Driver door approx. 15.5"W, officer door approx. 19.5"W. 35"W x 11"H x 13.5"D. (1) vertical partition 4" off officer side, (1) shelf offset to driver side of partition.	$506
1550-0009	Fixed rear cab wall narrow windows (pr).	$104
1550-0011	Rear crew cab door windows. Includes manual roll-down actuation. Not available with paddle style door latching.	$972
1550-0013	Driver and Officer door windows. Includes electric roll-down actuation. Each door to be individually controlled and the driver side is to have control for all electrically actuated windows.	$1,347
1550-0014	Rear crew cab door windows. Includes electric roll-down actuation. Each door to be individually controlled. Not available with paddle style door latching.	$1,347
1550-0017	Cab door panels stainless steel.	$1,201
1550-0018	Scuff plates stainless steel (Set). Not available with paddle latches.	$95
1550-0019	Windows cab side sliding driver side.	$242
1550-0024	All cab doors shall have exterior paddle latches.	$561
1550-0032	Windows cab side sliding officer side.	$242
1550-0037	(4) Incandescent cab step area lighting. Locate each light in [#LOC]. Lights to be switched with door ajar.	$141
1550-0038	(4) LED cab step area lighting. Locate each light [#LOC]. Lights to be switched with door ajar.	$557

1550-0054	All cab exterior access doors to have 1250 keyed locks.	$520
1550-0072	Cab door panels aluminum painted Zolatone gray.	$1,201
1550-0099	Scuff plates stainless steel (Set). Approx. 7"x7" to encompass door handle and lock. Not available with paddle latches.	$206
1550-0103	Rear crew cab door windows with rear fixed panel. Includes manual roll-down actuation. For use with paddle style door latching.	$1,135
1550-0117	Scuff plates stainless steel (PR) door lock. For use with paddle latches.	$48
1550-0120	Door panels cab alum painted Zolatone black.	$1,201
1550-0128	(4) Whelen LED cab step area lighting. Locate each light [#LOC]. Lights to be switched with door ajar.	$723
1550-0129	Enclosures for electric door window actuation switch(s) shall be stream lined, (1) switch behind another (not side by side) mounted in an enclosure to match the door's interior IPOS. Each door to be individually controlled. The driver shall have control for all electrically actuated windows.	$211
1550-0131	Removable access panel on each cab door to the regulator and latch.	$453
1550-0132	Driver and Officer door windows. Includes electric roll-down actuation. Each window to be individually controlled at each door. Each window switch will be flush mounted as far forward on the door as possible with minimal or no switch mounting protrusion. The driver side will NOT have controls for all electrically actuated windows but rather a single switch for the driver door window only.	$1,534
1550-0134	Polished stainless steel trim on bottom edge of the over wheel cab compartment opening (ea).	$31
1550-0135	Stainless steel trim on the vertical edge of the over wheel cab compartment opening (ea).	$43
1550-0136	Polished stainless steel trim on the vertical edge of the over wheel cab compartment opening (ea).	$56
1550-0137	A removable access panel shall be incorporated into the interior cover panel(s) of each cab door to permit easy access to the latch mechanism.	$453
1615-0001	Vista full height rear doors, 12".	$3,208
1620-0002	Stainless steel grille for Typhoon X.	$795
1620-0006	CIIX stainless steel grille for Typhoon X.	$795
1640-0000	Step below cab door. Located [#LOC]. Steps under front cab doors shall not interfere with approach angle.	$204
1670-0001	Ramco 6001FFR mirrors. Remote controlled with top CAS750 convex. Location: [#LOC].	$1,365
1670-0002	Ramco 6001MCR mirrors. Remote controlled with bottom convex. Location: [#LOC].	$1,084
1670-0003	Velvac 2010 mirrors. Door mounted west coast style with remote control and heat.	$581
1670-0010	Retrac West Coast mirrors mounted on cab doors.	$267
1670-0013	Both cab mirrors to be heated.	$265
1670-0038	Lang Mekra mirrors w/LED marker lights and turn signals. Door mounted west coast style with convex, remote control and heat.	$1,178
1670-0044	Ramco 6001FFR mirrors with INVUE camera and LED turn signals. Heated/remote controlled flat glass with heated/remoted controlled top CAS750 convex. Location: [#LOC].	$2,342
1670-0048	Retrac Aerodynamic remote heated mirrors (PR) mounted on cab doors.	$1,062
1670-0052	Ramco 6000-PCHR mirrors. The mirrors shall incorporate heated and remote for both flat and convex using (2) Ramco model ELE-310 switches. Location: [#LOC].	$1,580
1675-0022	Pair of 18" handrails located just behind driver and officer front door one each side.	$326
1675-0023	Pair of 18" handrails located just behind driver and officer rear door (ALS doors if equipped) one each side.	$326
1675-0024	Pair of 36" handrails located just behind driver and officer rear door (ALS doors if equipped) one each side.	$355
1675-0030	Mud flaps, front, black with E-ONE logo.	$137
1675-0093	Grille on side of cab over wheel (PR). Grilles are non-venting and for cosmetic purposes only. Includes black-out surface behind grilles.	$214
1675-0113	Pair of handrails (36" driver exterior and 18" officer interior) located just behind driver and indside officer rear door. ALS cab with multiple height exterior access only.	$355
1675-0116	Brushed stainless steel scuff plates for cab handrails (PR).	$178
1675-0144	Pair of 24" handrails located just behind driver and officer front door one each side.	$341
1675-0149	The battery charger receptacle mounting plate shall be fabricated using 3/16" aluminum smooth plate. It shall be painted to match cab two tone job colors and align with the paint break as mounted.	$122
1680-0000	Air intake emergency shut-down. Dash mounted guarded switch.	$1,424
1680-0001	Block heater 1000 watt.	$449
1680-0005	Thermatic fan clutch.	$1,246
1680-0006	Drivelines 1710.	$927
1680-0011	Tow eyes rear below body, painted.	$538
1680-0012	Tow eyes rear frame painted.	$479

1680-0015	Trailer hitch Class III mounted rear.	$856
1680-0021	Exhaust end for Plymovent. For exhaust extraction system.	$238
1680-0042	Tow hooks front painted in the down position.	$242
1680-0116	Oil pan heater. Fleetguard 22MM 150W/120V wired to shoreline.	$426
1680-0137	Diesel Exhaust Fluid (DEF) 10 gallon tank. Location: [#LOC].	$1,375
1680-0145	Diesel Exhaust Fluid (DEF) 5 gallon tank. Location: [#LOC].	$1,305
1680-0187	On-Spot tire chain installation. Requires pre-wire option located in Cab Electrical.	$2,462
1680-0193	Tow eyes rear below body stainless steel.	$1,781
1680-0217	Driveline guard (EA).	$267
1680-0231	Insta-chain tire chain installation. Requires pre-wire option located in Cab Electrical.	$2,462
1680-0239	Tow eyes rear frame painted mounted low just above tailboard.	$479
1680-0247	Trailer hitch Class III mounted rear, optmized mounting to be in a raised mounting position.	$856
1680-0249	Driveline guards (as applicable).	$798
1680-0250	Diesel Exhaust Fluid (DEF) 5 gallon tank for 2013 EPA engines. Location: [#LOC].	$1,518
1680-0251	Diesel Exhaust Fluid (DEF) 10 gallon tank for 2013 EPA engines. Location: [#LOC].	$1,587
1685-0008	Control lanyard Y type for air horns.	$153
1685-0057	Heaters rear with covers (PR), and front heater with heat to the feet for the driver and officer.	$1,432
1685-0094	Storage below rear bench seat. (1) horizontally hinged door on the front of the rear bench seat.	$387
1685-0116	Interior grab handle rubber covered (2). Locate one each side at interior of front cab door opening (at rear of opening).	$186
1685-0139	3/16" Aluminum plate on top engine access door. Finish to match cab interior and be spaced up approx 1/2".	$225
1685-0161	Severe duty dash package. Includes smooth plate alum center and officer side dash painted to match cab interior and lower dia plt kick panels.	$829
1685-0191	Diamond plate cover for battery charger/air compressor. Includes louvers for ventilation.	$197
1685-0235	Foot switch Linemaster model 632S to control air horns located [#LOC]. Includes 25 degree diamond plate bracket.	$103
1685-0238	Insulation - front cab wall. Includes insulation on rear cab heater hose lines (if equipped).	$92
1685-0265	Smooth plate cover(s) for battery charger and air compressor. These cover's shall be painted to match cab interior and shall include louvers as required for ventilation.	$197
1685-0266	Bolt-in partition wall. Locate under bench seat centered between driver and officer side.	$195
1685-0272	Cup holder (PR) with shallow tray located at front center of engine cover. Polyurethane construction for use with severe duty engine cover only.	$105
1685-0275	Cup holder (PR). Polyurethane construction for use in Typhoon and CII with severe duty engine cover only. Location: [#LOC].	$127
1685-0279	Chrome grab handle. Locate (1) on the engine cover centered between latches.	$99
1685-0281	Control lanyard type officer side only for air horns.	$153
1700-0003	Alternator Leece Neville 270 amp SAE, 240 amp NFPA rating.	$1,835
1700-0005	Alternator Leece Neville 320 amp. 320 amp SAE/275 amp NFPA.	$2,853
1750-0009	Radio AM/FM CD with weather band located [#LOC].	$703
1750-0010	Radio speakers additional pair. Locate each side rear cab ceiling.	$237
1750-0011	Speedometer officer's side overhead.	$269
1750-0013	Turn signal Whelen 600 LED amber arrow pair located [#LOC].	$558
1750-0015	Windshield fans 8" pair. Location: [#LOC].	$325
1750-0022	Battery charger Kussmaul 40 amp model 1200 with air compressor.	$2,062
1750-0024	Auto-Eject receptacle inlet 20 amp located [#LOC] with a [#COL] cover.	$497
1750-0029	Switch horn button two position DOT/air horn.	$86
1750-0030	Switch horn button two position DOT/electronic siren.	$86
1750-0031	Switch horn button two position DOT/Q2B.	$86
1750-0034	Switch, additional 12 volt/15 amp. Location and function: [#LOC].	$175
1750-0047	The chassis shall be pre-wired for installation of tire chains.	$369
1750-0059	Receptacle inlet 20 amp with a [#COL] cover. Location: [#LOC].	$250
1750-0066	Halogen front turn signal amber (PR). Locate: [#LOC].	$238
1750-0072	12 VDC (or 24VDC) electrical outlet in the cab wired battery hot. Location: [#LOC].	$52
1750-0073	Antenna base Tessco P/N 90942 (NMO Motorola Style - also called MATM style) on cab roof. Location: [#LOC].	$81
1750-0075	English dominant main cab gauge cluster.	$1,765
1750-0082	12V power distribution module. Includes (6) battery hot and (6) switched hot circuits. 100 amps max (IATS). Location: [#LOC].	$269
1750-0083	Turn signal Federal Signal QuadraFlare QL64Z-ARROW LED amber pair located [#LOC].	$238
1750-0125	Block heater receptacle 15 amp with a [#COL] cover. Location [#LOC].	$250
1750-0150	Block heater receptacle 20 amp Auto-Eject with a [#COL] cover. Location [#LOC].	$497

1750-0158	Dome Lts Red/White LED. Package includes two lights mounted in the front and two mounted in the rear of the cab. White light wired through door and light assembly switch. Red light through light assembly switch.	$703
1750-0166	ATC override switch.	$175
1750-0178	Windshield fan 8". Location: rear facing mounted on driver side 3x3 post.	$164
1750-0187	Auto drain, Kussmaul model 091-9-089 120V. For use with air compressor 091-9B-1 only.	$178
1750-0188	DPF regeneration override switch.	$175
1750-0195	Cab dome lts red/white (2 red/white, 2 white) 4" incandescent. White light wired thru door and light assembly mounted rocker switch. Red light thru light assembly mounted rocker switch. Red/white located in front of cab, white located at rear cab doors.	$506
1750-0222	12 volt electrical outlet in the cab wired through ignition. Location: [#LOC].	$52
1750-0234	Digital speedometer officer's side overhead.	$500
1750-0267	Battery charger Kussmaul 4000, 45 amp with air compressor.	$2,113
1750-0268	Battery charger Kussmaul 40 amp model 1200 with 120V HP air compressor.	$2,105
1750-0284	Switch additional guarded toggle. Location and Function: [#LOC].	$175
1750-0285	The chassis shall be pre-wired for installation of tire chains. Includes guarded toggle switch located on the driver side diagnostic panel.	$369
1750-0286	Receptacle block heater inlet 20amp with a [#COL] cover. Location: [#LOC].	$250
1750-0289	Battery charger Kussmaul 4000, 45 amp	$1,358
1750-0369	On-Spot activation switch shall have a red flip up safety guard. The switch shall de located on the driver side overhead panel offset to the officer side as far as possible.	$44
1800-0001	Cooling for EGR engines. Includes charge air cooler.	$5,536
1800-0013	Cooling system for use with Cyclone II X, Typhoon X, and Quest chassis. For use with 2010/2013 EPA engines. Includes coolant recovery system.	$6,238
3000	**Body**	
3090-0029	Body Modification, Side Mount Stainless Steel, Tradition.	$1,677
3090-0030	Body Modification, Top Mount Stainless Steel, Tradition.	$3,771
3100-0095	Driver side body with full height 36" wide forward and 36" wide rearward compartmentation. Includes (1) 56" wide compartment over the wheel well.	$8,528
3100-0096	Driver side body with full height 42" wide forward and 42" wide rearward compartmentation. Includes (1) 56" wide compartment over the wheel well.	$9,115
3100-0112	Driver side body with full height 36" wide forward and 50" wide rearward enhanced extended compartmentation. Includes (1) 56" wide compartment over the wheel well.	$9,275
3100-0113	Driver side body with full height 42" wide forward and 56" wide rearward enhanced extended compartmentation. Includes (1) 56" wide compartment over the wheel well.	$9,873
3100-0153	Driver side body with full height 42" wide forward and 56" wide rearward enhanced extended compartmentation. Includes (1) 56" wide compartment over the wheel well.	$10,499
3100-0157	Driver side body with upper and lower compartmentation. Includes 42" wide forward and 42" wide rearward lower compartments and (3) opening upper compartments.	$9,115
3100-0158	Portable water tank storage with access door at rear. Includes composite material overlay and door ajar switch.	$655
3100-0159	Driver side body with full height 42" wide forward and 56" wide rearward enhanced extended compartmentation. Includes (1) 56" wide compartment over the wheel well and one (1) storage tunnel and access door at rear.	$12,917
3100-0166	Driver side tunnel to hold: [#LOC].	$530
3100-0178	Driver side body with full height 42" wide forward and 56" wide rearward enhanced extended compartmentation. Includes (1) 56" wide compartment over the wheel well and one (1) storage tunnel.	$12,917
3100-0188	Stainless steel driver side body with full height 40" wide forward and 40" wide rearward compartmentation. Includes (1) 54" wide compartment over the wheel well.	$21,966
3100-0314	Driver full height side body with upper and lower compartmentation. Includes 42" wide forward and 56" wide rearward lower enhanced compartmentation and (3) opening upper compartments. For use with ladder storage in the hosebed	$9,873
3110-0000	Center Slam Strip Rear End with (3) compartments- (2) lower and (1) upper and a diamond plate center strip for a Jet or Newton Dump application. Includes diamond plate panels.	$1,979
3110-0004	Full Height Rear Compartment. Includes diamond plate panels.	$1,071
3110-0005	Full Height Rear Compartment. Includes smooth plate panels.	$1,071
3110-0013	Full Height Rear Compartment with Officer Side Storage Tunnel. Includes smooth plate panels and storage access door with push button latch.	$996
3110-0015	Full Height Rear Compartment with Officer Side Storage Tunnel. Includes diamond plate panels and storage access door with push button latch.	$966
3110-0017	Full Height Rear Compartment with diamond plate panels.	$893
3110-0018	Full Height Rear Compartment with smooth plate panels.	$893

3110-0035	Upper rear compartment depth to be approximately 25" deep.	$240
3110-0052	Bolt-on diamond plate tailboard (full width of rear compartment). Includes the enhanced extended side compartment frame work and handrails- (2) vertically on trailing edge of body and horizontally mounted handrail(s) below hosebed.	$958
3110-0053	Bolt-on diamond plate tailboard (full width of rear compartment). Additional 10" of tailboard to run full width of body ("T" shaped tailboard). Includes the enhanced extended side compartment frame work and handrails- (2) vertically on trailing edge of body and horizontally mounted handrail(s) below hosebed.	$2,014
3110-0061	Bolt-on diamond plate tailboard (full width of rear compartment). Includes the enhanced extended side compartment frame work with diamond plate compartment tops, (1) officer side lower area folding step with integral lights. Driver side includes (1) upper hosebed mounted handrail (as applicable) and handrails- (2) vertically on trailing edge of body and horizontally mounted handrail(s) below hosebed.	$746
3110-0095	Full Height Rear Compartment with Driver and Officer Side Storage Tunnels. Includes smooth plate panels and storage access doors with push button latches.	$1,099
3110-0114	Bolt-on diamond plate 12" tailboard full width of body with Bustin Tread. This provides a flat back body design. Includes hand rails, (2) vertically on trailing edge of body and horizontally mounted hand rail below hose bed.	$899
3110-0123	Lower rear stainless steel short compartment B1, 46" wide x 35" high x 26" deep. Includes bolt-on intermediate step above. Entire rear panel to be smooth aluminum plate for Chevron graphics.	$926
3110-0176	Full Height Rear Compartment. Includes smooth plate panels. B1 to be as tall as possible (remove traffic advisor platework).	$1,049
3110-0177	Bolt-on diamond plate 12" tailboard (full width of body). Includes (2) squared off beavertails (no stanchions) with removable outer panels and (2) vertically mounted handrails on trailing edge of body.	$674
3110-0189	Full Height Rear Compartment with Officer Side Storage Tunnel. Includes smooth plate panels and storage access door with push button latch (remove traffic advisor platework).	$996
3110-0198	B1 floor to be recessed as applicable to allow for booster reel to be located below newton dump without interference.	$436
3110-0200	Full Height Rear Compartment with Driver and Officer Side Storage Tunnels. Includes smooth plate panels and storage access doors with d-ring latches.	$1,123
3110-0201	Bolt-on diamond plate tailboard (full width of rear compartment). Additional 10" of tailboard to run full width of body ("T" shaped tailboard). Includes the enhanced extended side compartment frame work and (1) handrail vertically on trailing edge of driver's side of body and horizontally mounted handrail (driver's side) below hosebed.	$2,014
3110-0203	Bolt-on diamond plate tailboard (full width of rear compartment). Includes the enhanced extended side compartment frame work with diamond plate compartment tops raised 12" to cover rear piping, (1) officer side lower area folding step. Driver side includes (1) upper hosebed mounted handrail (as applicable) and handrails- (2) vertically on trailing edge of body and horizontally mounted handrail(s) below hosebed.	$1,030
3110-0207	Lower rear stainless steel short compartment B1, 46" wide x 35" high x 26" deep, without an intermediate rear step. Entire rear panel to be smooth aluminum plate for Chevron graphics.	$740
3110-0211	Bolt-on diamond plate tailboard (full width of rear compartment). Includes the enhanced extended side compartment frame work with diamond plate compartment tops, (2) recessed folding steps in lower area (1) officer side, (1) driver side. Driver side includes (1) upper hosebed mounted handrail (as applicable) and handrails- (2) vertically on trailing edge of body and horizontally mounted handrail(s) below hosebed.	$966
3110-0212	Bolt-on diamond plate tailboard (full width of rear compartment). Additional 10" of tailboard to run full width of body ("T" shaped tailboard). Includes the extended side compartment frame work and handrails- (2) vertically on trailing edge of body and horizontally mounted handrail(s) below hosebed.	$2,014
3110-0216	Bolt-on diamond plate 12" tailboard (full width of body). Includes (2) squared off beavertails with stanchions and removable outer panels and handrails- (2) vertically on trailing edge of body and horizontally mounted handrail(s) below hosebed.	$674
3110-0223	Full Height Rear Compartment with Officer Side Storage Tunnel. Includes smooth plate panels and storage access door with d-ring latch.	$996
3110-0224	Rear body panels to be upgraded from smooth aluminum plate to unpainted smooth FRP.	$238
3110-0228	Bolt-on diamond plate 12" tailboard (full width of body). Includes (2) squared off beavertails (no stanchions) with removable outer panels and handrails- (2) vertically on trailing edge of body and horizontally mounted handrail(s) below hosebed. Beavertails and outer panels to be smooth plate painted job color. Tailboard to diamond plate painted black durabak.	$1,664

3110-0232	Bolt-on diamond plate 22 inch tailboard tailboard (full width of body). Includes (2) squared off beavertails (no stanchions) with removable outer panels and handrails- (2) vertically on trailing edge of body and horizontally mounted handrail(s) below hosebed.	$1,055
3120-0004	Officer half side body with 36" wide forward and 36" wide rearward compartmentation. Includes adjustable ladder tracks.	$4,262
3120-0005	Officer half side body with 42" wide forward and 42" wide rearward compartmentation. Includes adjustable ladder tracks.	$4,557
3120-0013	Officer half side body with 36" wide forward and 50" wide rearward enhanced extended compartmentation. Includes adjustable ladder tracks.	$5,018
3120-0014	Officer half side body with 42" wide forward and 56" wide rearward enhanced extended compartmentation. Includes adjustable ladder tracks.	$5,317
3120-0145	Officer 3/4 side body with full height 36" wide forward and 36" wide rearward compartmentation. Includes (1) 56" wide compartment over the wheel well.	$5,324
3120-0146	Officer 3/4 side body with full height 42" wide forward and 42" wide rearward compartmentation. Includes (1) 56" wide compartment over the wheel well.	$5,697
3120-0155	Officer 3/4 side body with 36" wide forward and 50" wide rearward enhanced extended compartmentation. Includes (1) 56" wide compartment over the wheel well.	$6,082
3120-0156	Officer 3/4 side body with 42" wide forward and 56" wide rearward enhanced extended compartmentation. Includes (1) 56" wide compartment over the wheel well.	$6,456
3120-0160	Officer side body with full height 36" wide forward and 36" wide rearward compartmentation. Includes (1) 33" wide compartment over the wheel well and (1) Zico Overhead Ladder Rack.	$13,946
3120-0161	Officer side body with full height 42" wide forward and 42" wide rearward compartmentation. Includes (1) 33" wide compartment over the wheel well and (1) Zico Overhead Ladder Rack.	$14,543
3120-0170	Officer side body with full height 36" wide forward and 50" wide rearward enhanced extended compartmentation. Includes (1) 33" wide compartment over the wheel well and (1) Zico Overhead Ladder Rack.	$14,704
3120-0171	Officer side body with full height 42" wide forward and 56" wide rearward enhanced extended compartmentation. Includes (1) 33" wide compartment over the wheel well and (1) Zico Overhead Ladder Rack.	$15,301
3120-0279	Officer side body with full height 42" wide forward and 56" wide rearward enhanced extended compartmentation. Includes (1) 33" wide compartment over the wheel well and (1) Zico Overhead Ladder Rack.	$16,307
3120-0283	Officer side body with full height 42" wide forward and 56" wide rearward enhanced extended compartmentation. Includes (1) 56" wide compartment over the wheel well and one (1) storage tunnel.	$12,917
3120-0300	Officer side body with full height 42" wide forward and 56" wide rearward enhanced extended compartmentation. Includes (1) 56" wide compartment over the wheel well and one (1) storage tunnel and access door at rear.	$12,917
3120-0301	Officer side tunnel to hold: [#LOC].	$530
3120-0315	Officer side body with full height 42" wide forward and 56" wide rearward enhanced extended compartmentation. Includes (1) 33" wide compartment over the wheel well, one (1) storage tunnel and (1) Zico Overhead Ladder Rack.	$18,724
3120-0334	Stainless steel officer side body with full height 40" wide forward and 40" wide rearward compartmentation. Includes (1) 38" wide compartment over the wheel well and (1) Zico Overhead Ladder Rack.	$14,543
3120-0360	2-Arm Ladder Rack on Officer Side. The ladder rack includes amber lights on each end to visually indicate when the rack is in motion. Restricts the top folding step (if optioned) from closing completely. Includes mounting bracket (if required, matching rear compartment face or compartment wrap finish) for components mounted on rear compartment face or hosebed upper side assembly.	$13,582
3120-0404	Officer half side body with 36" wide forward and 31" wide rearward compartmentation. Includes adjustable ladder tracks mounted to outside of hosebed 3x3 and to run full height for max adjustments..	$4,262
3120-0428	Officer side body with full height 36" wide forward and 50" wide rearward enhanced extended compartmentation. Includes (1) 33" wide compartment over the wheel well and (1) Zico Overhead Ladder Rack. Area below forward compartment will be for mounting of fuel fill.	$15,669
3120-0466	Officer side body with upper and lower compartmentation. Includes 36" wide forward and 36" wide rearward lower compartments and (3) opening upper compartments with (1) 33" wide compartment over the wheel well and (1) Zico Overhead Ladder Rack.	$14,307
3120-0483	Officer full height side body with upper and lower compartmentation. Includes 42" wide forward and 56" wide rearward lower enhanced compartmentation and (3) opening upper compartments. For use with ladder storage in the hosebed.	$9,873

3120-0491	Officer side body with upper and lower compartmentation. Includes 42" wide forward and 42" wide rearward lower compartments, (3) opening upper compartments. Includes (1) 33" wide compartment over the wheel well and (1) Zico Overhead Ladder Rack. Smooth plate compartment top painted black durabak.	$15,610
3130-0003	Pump module. Includes 39" wide pump panel opening and running boards.	$4,347
3130-0020	Upper TM pump module with diamond plate storage pan.	$1,498
3130-0103	Speedlay module. Includes area for (2) speedlays with center divider, lower storage compartments with push button latches and running boards.	$1,498
3130-0190	Top Mount Pump Module. Includes area for single stacked double crosslay (notched divider) and TM walkway with folding steps with intergral lights and (2) vertical handrails.	$1,723
3130-0191	Top Mount Pump Module. Includes area for single stacked triple crosslay (notched dividers) and TM walkway with folding steps with integral lights and (2) vertical handrails.	$2,090
3130-0193	Side Mount Pump Module. Includes area for single stacked triple crosslay (notched dividers).	$371
3130-0194	Top Mount Pump Module. Includes area for a double speedlay and TM walkway with folding steps with integral lights and (2) vertical handrails.	$2,725
3130-0195	Top Mount Pump Module. Includes area for a double speedlay, single crosslay and TM walkway with folding steps with integral lights and (2) vertical handrails.	$3,092
3130-0261	Pump module to have triple crosslay configuration (rearward crosslay for dry lay storage only). No plumbing will go to this area (note officer side rear 2.5" discharge application). Rearward area will have floor slotted and will have full capablity to have a discharge added for future use.	$385
3130-0272	Transverse Module (narrow). Module to be unpainted. Locate forward of pump area. Includes a single compartment opening per side (with a shallow lower area and a transverse upper area with diamond plate flooring full width) and running boards. Module to be same height as main pump module.	$2,260
3130-0282	Stainless steel 46" wide lower pump module. Includes side running boards with Bustin Tread inserts.	$4,347
3130-0289	Upper SM stainless steel pump module with single stacked double crosslays and top open storage with treadplate flooring.	$1,280
3130-0298	Upper TM stainless steel pump module with single stacked double crosslays and top open storage with treadplate flooring.	$1,429
3130-0308	Crosswalk module. Includes stainless steel walkway storage compartments with lift-up access lids and butterfly latches, non-skid running boards with Bustin Tread, and access hand rails mounted one each side to the front of the pump enclosure assembly.	$1,249
3130-0325	Transverse Module (narrow). Module to be located forward of the main pump module and match main module in height and finish. Includes a single compartment opening per side (with a shallow lower area and a transverse upper area with diamond plate flooring full width) and running boards.	$4,545
3130-0326	Top Mount Pump Module. Includes area for single stacked double crosslay (notched divider) and TM walkway with dual lighted LED folding steps with intergral lights and (2) vertical handrails.	$1,723
3130-0327	Top Mount Pump Module. Includes area for single stacked triple crosslay (notched dividers) and TM walkway with dual lighted LED folding steps with integral lights and (2) vertical handrails.	$2,090
3130-0328	Top Mount Pump Module. Includes area for a double speedlay and TM walkway with dual lighted LED folding steps with integral lights and (2) vertical handrails.	$2,725
3130-0329	Top Mount Pump Module. Includes area for a double speedlay, single crosslay and TM walkway with dual lighted LED folding steps with integral lights and (2) vertical handrails.	$3,092
3130-0330	Crosswalk module. Includes running boards, (1) dual lighted LED folding step each side and access handrails mounted on the pump module.	$855
3130-0362	Crosswalk module.Includes running boards, (1) dual lighted LED folding step each side and access handrails mounted on the pump module. Diamond plate walkway plate to be 20" wide due to 2-door Freightliner DEF tank.	$855
3130-0363	Crosswalk module. Includes walkway storage compartments with push button latches, running boards, (1) dual lighted LED folding step each side and access handrails mounted on the pump module. Diamond plate walkway plate to be 20" wide due to 2-door Freightliner DEF tank.	$1,249
3130-0364	Special Top Mount Pump Module. Includes area for a double speedlay and TM walkway with dual lighted LED folding steps with integral lights and (2) vertical handrails. Extend-a-gun piping located in the dunnage pan offset to officer side.	$3,678
3130-0406	Main top mount pump module with upper storage area rearward of TM control panel. For use with individual TM walkway and speedlay module behind cab. Includes forward access pump door with push button latches and (2) vertical handrails (1 each side) mounted along the forward outboard extrusion.	$2,725
3130-0417	Top Mount Pump Module. Includes area for a diamond plate storage pan and 20" wide TM walkway with dual lighted LED folding steps with integral lights and (2) vertical handrails.	$2,326
3130-0426	Upper TM pump module with diamond plate open back storage pan.	$1,688

3130-0467	Side Mount Pump Module. Includes area for double stacked double crosslay (notched dividers). Crosslay opening to be same as standard tradition triple crosslay design.	$837
3130-0486	Upper TM pump module with smooth plate storage pan. Side panels to be Zolatone gray. Storage pan to be painted black durabak.	$1,860
3130-0494	Upper TM pump module with a transverse storage compartment with aluminum tread plate vertical hinged doors (1) each end of the compartment and a embossed tread plate top.	$1,818
3130-0495	Enclosed Pump Module with Double Speedlays. Includes 47.5" wide pump panel opening. Includes area for (2) stacked speedlays, lower storage compartments with push button latches forward of pump panel opening. Upper module area to have storage pan.	$15,753
3130-0497	Upper TM pump module with modified sides for improved visibility and diamond plate storage pan.	$1,953
3134-0006	The single gauge panel on the driver's side of the side mount module is to be hinged downward. Includes two (2) cable hold opens, and latches.	$117
3134-0011	Officer side pump panel to be vertically hinged on forward extrusion. Panel(s) to be secured in the closed position with push button latches. Upper panel to be held open with gas shock.	$436
3134-0013	Driver and Officer side pump panels to be vertically hinged on forward extrusion. Panels to be (2) or (3) pieces, depending on module height, and secured in the closed position with push button latches. Upper panels to be held open with gas shock.	$868
3134-0015	Stainless steel TM control panel, driver and officer side pump panels.	$844
3134-0017	The TM control panel, driver and officer side pump panels are to be painted Zolatone black.	$711
3134-0026	Pump panel support angles. Locate up to (3) horizontally mounted as required on interior side of the main vertically hinged pump panel(s).	$134
3134-0056	Driver side panel shall be attach with screw.Officer side pump panels to be vertically hinged on forward extrusion. Panels to be (2) or (3) pieces, depending on module height, and secured in the closed position with push button latches. Upper panels to be held open with gas shock.	$868
3134-0068	Driver side panel shall be attach with screw and Escutchion Plate shall be vertically hinge forward.Officer side pump panels to be vertically hinged on forward extrusion. Panels to be (2) or (3) pieces, depending on module height, and secured in the closed position with push button latches. Upper panels to be held open with gas shock.	$868
3134-0072	Driver and officer side mounted pump panels are to be brushed stainless steel.	$477
3134-0074	The top mount control panel and the driver and officer side pump panels are to be brushed stainless steel.	$844
3134-0078	Special Driver and Officer side pump panels to be vertically hinged on forward extrusion. Panels to be (2) or (3) pieces, depending on module height, and secured in the closed position with push button latches. Upper panels to be held open with gas shock.	$1,249
3134-0107	The TM control panel to be stainless steel. The driver and officer side pump panels are to be painted Zolatone black.	$711
3134-0112	Side control pump enclosure structure and panels to be modified as necessary to provide the lowest practical crosslay floor height from the ground.	$1,158
3136-0000	Air horn switch at pump panel. Switch to be labeled "Evacuation Alert". Location: [#LOC].	$122
3136-0004	The lower area of the pump compartment to have a four (4) sided heat pan with two (2) removable (side to side) bottoms. Bottoms to be secured in the closed position with mechanical fasteners.	$879
3136-0006	Two (2) pump compartment heaters are to be mounted in the pump area. Locate as low as possible.	$1,429
3136-0011	P-Rubber in flex joint(s) between pump module and/or body modules.	$523
3136-0029	Air horn switch at pump panel. Switch to be labeled "Air Horn". Location: [#LOC].	$122
3136-0037	Top mount walkway compartments. Includes spring mounted hinged doors with push button latch. Each compartment includes (1) incandescent light and wired to door adjar indicator.	$785
3136-0061	Heat pan removable bottoms to have screws and nuts in place of butterfly latches.	$238
3136-0064	The lower area of the pump compartment to have a four (4) sided heat pan with two (2) removable (side to side) bottoms. Bottoms to be secured in the closed position with butterfly latches.	$879
3136-0078	Top mount walkway compartments. Includes spring mounted hinged doors with push button latch. Each compartment includes (1) LED light and wired to door adjar indicator.	$785
3136-0081	A pump compartment heater with 110V blower to be mounted in the pump area.	$1,113
3136-0114	The running board(s) to be notched for Pistion Intake Valve. Location(s): [#LOC].	$407
3136-0115	The lower area of the pump compartment to have a four (4) sided heat pan with two (2) removable (side to side) bottoms. Lower section of pan designed to provide the maximum amount of ground clearance. Bottoms to be secured in the closed position with butterfly latches.	$879
3136-0117	P-Rubber in flex joint(s) between pump module and/or body modules. Horizontal across tops and along sides at flex joint(s).	$523

3136-0118	A two (2) piece aluminum pan shall be bolted in place below the pump controls within the pump module. This pan shall utilize .090 aluminum plate to provide a shield to reduce heat loss as the pump controls exit the pump module for the top mount control panel.	$227
3200-0054	Heater rear walk-in area. Locate under bench seat in the body interior.	$1,432
3300-0008	Door double vertically hinged painted. Location(s): [#LOC].	$722
3300-0009	Door single vertically hinged diamond plate. Location(s): [#LOC]	$454
3300-0010	Door double vertically hinged diamond plate. Location(s): [#LOC].	$649
3300-0011	Door single horizontally hinged lift-up painted. Location(s): [#LOC]	$631
3300-0017	Door roll up short (up to 45") with satin finish ROM. Location(s): [#LOC].	$728
3300-0019	Door roll up tall (greater than 45") with satin finish ROM. Location(s): [#LOC].	$1,038
3300-0021	Door roll up short (up to 45") with painted finish ROM. Location(s): [#LOC].	$1,234
3300-0022	Door roll up tall (greater than 45") with painted finish ROM. Location(s): [#LOC].	$1,544
3300-0025	Door single horizontally hinged drop down painted. Location(s): [#LOC]. Door(s) will have chain hold open devices.	$521
3300-0030	Door double 3-point vertically hinged painted. Location(s): [#LOC]	$1,441
3300-0062	Keyed compartment door latch with #1250 key. Location(s): [#LOC].	$68
3300-0063	Keyed roll-up compartment door with #1250 key. Location(s): [#LOC].	$121
3300-0066	Drip pan for a ROM roll-up door (EA). Location(s): [#LOC].	$146
3300-0076	Door double 3-point vertically hinged painted. Location(s): [#LOC]	$1,049
3300-0130	Door single horizontally hinged drop-down painted. Includes body mounted stops to support the door in the open position. Location(s): [#LOC].	$521
3300-0133	Door single horizontally hinged drop-down sanded smooth plate. Location(s): [#LOC].	$413
3300-0135	Door double 3-point vertically hinged smooth plate sanded. Location(s): [#LOC]	$1,441
3300-0139	Door double 3-point horizontal hinged painted. Location(s): [#LOC]. Lower door should act as an exterior writing surface, w/ adjustable angles. The paddle latch on the second door shall not protrude past the edge of the door.	$1,441
3300-0140	Door single horizontally hinged drop down diamond plate. Location(s): [#LOC].	$391
3300-0162	Pair of single vertically hinged diamond plate doors. Location(s): Driver and Officer side of transverse module. Doors to be reverse hinged and are to have plunger style hold opens IPO shocks for max door opening width in the open position.	$866
3300-0164	Door double vertically hinged w/rotary latches - painted . Location(s): [#LOC]	$722
3300-0166	Door double vertically hinged w/rotary latches - diamond plate. Location(s): [#LOC]	$649
3300-0167	Door double 3-point vertically hinged w/rotary latches - painted. Location(s): [#LOC]	$1,441
3300-0168	Door double 3-point vertically hinged w/rotary latches - painted. For use with compartments up to 50" high. Location(s): [#LOC].	$1,049
3300-0169	Door double 3-point vertically hinged w/rotary latches - smooth plate sanded. Location(s): [#LOC]	$1,441
3300-0177	Door single horizontally hinged drop down painted. Door will have 2 D-ring handles. Location(s): [#LOC].	$672
3300-0191	First closed door of double door compartment to have top and bottom latches (Each).	$203
3300-0195	Door roll up tall (greater than 45") with painted finish Amdor. Location(s):[#LOC].	$1,841
3300-0196	Door double vertically hinged painted, includes (2) gas shock-style hold-open device IPOS. Location(s): [#LOC].	$778
3300-0197	Door roll up short (up to 45") with painted finish Amdor. Location(s): [#LOC].	$1,633
3300-0202	Door single horizontally hinged drop-down sanded smooth plate. Location(s): [#LOC].	$413
3300-0205	3-Point latch double doors to have latch brackets installed with "PULL" tags.	$510
3300-0206	Additional roll up door stop latches shall be mounted for B1 at a raised location aligned with the bottom of the ladder tunnel. The raised latches/hooks shall not be included as part the door ajar circuit.	$63
3305-0003	Single diamond plate cover for the crosslay area. Includes applicable grab handle(s) and (2) hold downs. Non-aerial applications to be tagged as a non-stepping surface.	$519
3305-0007	Vinyl [#COL] hose bed cover with attached rear flap(s).	$747
3305-0008	Vinyl [#COL] crosslay cover with attached side flaps.	$262
3305-0015	Vinyl [#COL] speedlay front cover.	$206
3305-0016	Vinyl [#COL] speedlay side covers.	$175
3305-0021	Vinyl [#COL] hose bed cover with side bungee cords and attached rear flap(s).	$1,040
3305-0022	Vinyl rear cover for diamond plate hose bed cover. Color: [#COL].	$231
3305-0024	Vinyl [#COL] side covers for diamond plate crosslay cover.	$164
3305-0040	Nylon black strap with clip release on running board suction tray (EA). Location: [#LOC]	$122
3305-0056	(2) piece aluminum hosebed cover. Includes center hosebed divider with notched rear, gas shocks, positive hold opens/hold closed at rear, (2) grab handles- frt and (2) handrails -rear.	$2,379
3305-0064	Nylon black strap with aluminum quick-release buckle for hose tray. Strap to attach to side walls of tray down low as applicable. Location: [#LOC].	$100

3305-0068	Vinyl [#COL] hosebed cover with attached rear flap(s). Cover to have snaps and velcro along front (no awning attachment) and sides. No twist locks. The rear bungees to be tie-in versus sown (use ilets sized to secure a looped and tied bungee). Bungee to be easily removed and replaced (by fire department) in field.	$1,266
3305-0069	Diamond plate speedlay cover. Includes fixed rear portion on rear of module (over backboard storage area, if applicable) and hold-open with grab handles on rearward area.	$563
3305-0084	(4) piece aluminum hosebed cover. Includes center hosebed divider with notched rear, (2) gas shocks, positive hold-opens/hold-closed at center and at the rear, (6) grab handles- (4) fwd cover and (2) fwd area of rear cover with (2) handrails on rear cover. A landing platform (sized and positioned as required with overall rearend configuration) with embossed diamond plate surface will be centrally located at the upper rear of the apparatus to assist with hosebed cover operations.	$3,311
3305-0094	Fire Retardent Vinyl [#COL] crosslay cover with attached side flaps.	$522
3305-0097	(4) piece aluminum hosebed cover. Includes center hosebed divider with notched rear, (2) gas shocks, positive hold-opens/hold-closed at center and at the rear, (6) grab handles- (4) fwd cover and (2) fwd area of rear cover with (2) handrails on rear cover. The enhanced extended landing area(s) will be used to assist with hosebed cover operations. For use with Enhanced Extended Rescue Pumper only.	$3,218
3305-0124	Vinyl [#COL] crosslay cover with attached side flaps. Cover to have velcro on the top IPO snaps.	$262
3305-0128	Vinyl rear cover for diamond plate hosebed cover. Cover to be attached with snaps. Color: [#COL].	$326
3305-0130	Vinyl [#COL] crosslay cover with attached side flaps. Cover to have snaps and velcro on the top. No twist locks. The side bungees to be tie-in versus sown (use ilets sized to secure a looped and tied bungee). Bungee to be easily removed and replaced (by fire department) in field.	$444
3305-0142	Vinyl red side covers for diamond plate crosslay cover. Covers to attach to the DP cover with snaps. The lower corners to have bungee cords. Cords are to be tie-in versus sown. Flaps to have eyelets sized to secure individual looped and tied bungees. Cords to be easily removed and replaced (by fire department) in field.	$268
3305-0143	Vinyl rear cover for diamond plate hosebed cover. Cover to attach to the DP cover with snaps. The lower edge to have bungee cords. Cords are to be tie-in versus sown. Flap to have eyelets sized to secure individual looped and tied bungees. Cords to be easily removed and replaced (by fire department) in field. Color: Red	$339
3305-0147	Nylon yellow strap with aluminum quick-release buckle for hose tray. Strap to attach to side walls of tray down low as applicable. Location: [#LOC].	$100
3305-0152	Vinyl speedlay cover. For use with individual preconnect module with side by side storage. Includes mechanical hold-downs on top outer corners and quick-release side flap hold downs. Cover color: [#COL].	$304
3305-0166	Nylon black strap with aluminum quick-release buckle for hose tray. Strap to attach to side walls of tray down low as applicable. For use with rolled hose. Location: [#LOC].	$109
3305-0168	Vinyl [#COL] hose bed cover with side bungee cords without attached rear flap(s). Requires rear cover option.	$926
3305-0171	Diamond plate speedlay cover (3/16" diamond plate). Includes fixed rear portion on rear of module (over backboard storage area, if applicable) and hold-open with grab handles on rearward area.	$588
3305-0174	Single diamond plate cover for the crosslay area. Includes applicable grab handle(s) and (2) hold downs. Cover to be embossed diamond plate.	$571
3305-0175	Vinyl fire retardent [#COL] hose bed cover with attached rear flap(s).	$934
3305-0176	Vinyl fire retardent [#COL] side covers for diamond plate crosslay cover.	$205
3305-0180	Vinyl [#COL] hose bed cover with side bungee cords and attached rear flap(s). Includes large pull tabs to ease securing cover while wearing gloves.	$1,136
3305-0183	Vinyl [#COL] crosslay cover with attached side flaps with bungee cord.	$327
3305-0184	Vinyl [#COL] side covers for diamond plate crosslay cover. Includes large pull tabs to ease securing end flaps while wearing gloves.	$164
3305-0189	The rear flap(s) of the hosebed cover shall be upgraded to add weight to the bottom of the rear vertical flap(s).	$464
3305-0191	Vinyl rear cover for diamond plate hose bed cover using California Type 3 straps IPOS. Color: [#COL].	$354
3305-0200	Vinyl [#COL] end covers for upper outboard hose storage of the hosebed.	$164
3305-0203	Nylon black strap with aluminum quick-release buckle for tailboard hose tray(s). Strap to attach to side walls of tray down low as applicable.	$100

3305-0205	Vinyl [#COL] side covers for diamond plate crosslay cover. Covers to attach to the DP cover with snaps. The lower corners shall be secured in place using California type straps (2) each side IPOS. These straps shall function to allow each strap to be looped around the horizontal crosslay roller on each side as part of the attach system.	$332
3305-0206	Vinyl [#COL] hose bed cover using Nitrogen/Oxygen type straps (2) attach positions each side (4) total to secure the rear flap(s) IPOS. The upper straps shall be sewn in place leaving the ratchet clamp approximately half way or mid height of the rear flap(s). The bottom straps shall be fastened to a strap tie down mounted slightly above the horizontal handrail in line with the sewn in straps above (4) total top and (4) total bottom. The bottom straps shall feed directly above to the ratchet clamps (sewn in) as part of the attach/securing system.	$1,420
3305-0209	Smooth plate speedlay cover painted gray durabak. Includes fixed rear portion on rear of module (over backboard storage area, if applicable) and hold-open with grab handles on rearward area.	$720
3305-0212	Vinyl fire retardent [#COL] hosebed cover with twist locks fasteners and bungee cord attached rear flap(s). Cover to be partial hosebed cover leaving hosebed walkway area uncovered. To extend full length of the hosebed from roof top compartment on the side to divider against walkway in the middle and to hosebed storage pan rearward mounting flange at the front.	$1,207
3305-0215	Vinyl [#COL] hose bed cover with attached rear flap(s). Cover to have snaps and velcro along front (NO awning attachment) and velcro along sides. No twist locks.	$747
3310-0198	Crosslay double to hold up to 200' of 2" DJ (each). Includes storage pan to rear of crosslays. Stainless steel product.	$2,705
3320-0005	SCBA Bottle Storage. (4) Cast Product SCBA bottle storage with gasketed doors. (2) each side in rear wheel well area.	$647
3320-0007	SCBA Bottle Storage. (7) E-ONE SCBA bottle storage with hinged doors (doors to match wheel well material) with push button latches. (4) officer side and (3) driver side in wheel well area.	$1,036
3320-0018	SCBA Bottle Storage. (8) Fire Shopp SCBA bottle storage with hinged doors with push button latches. (4) officer side and (4) driver side in wheel well area.	$1,509
3320-0019	SCBA Bottle Storage. (7) Fire Shopp SCBA bottle storage with hinged doors with push button latches. (4) officer side and (3) driver side in wheel well area.	$1,264
3320-0020	SCBA Bottle Storage. (4) Fire Shopp SCBA bottle storage with hinged doors with push button latches. (2) officer side and (2) driver side in wheel well area.	$1,098
3320-0039	SCBA bottle storage. (3) Fire Shopp style SCBA bottle storage with hinged brushed stainless steel doors with push-button latches. (2) officer side and (1) driver side in the rear wheel well area.	$824
3320-0058	SCBA Bottle Storage. (2) Fire Shopp SCBA bottle storage with hinged doors with push button latches. Located centered in officer side wheel well area.	$550
3320-0065	SCBA Bottle Storage. (6) Fire Shopp SCBA bottle storage with hinged doors with push button latches. (3) officer side and (3) driver side in wheel well area.	$1,181
3320-0074	SCBA Bottle Storage. (16) E-ONE SCBA bottle storage with hinged doors (doors to match wheel well material) with push button latches and one aluminum tray for each bottle. (8) officer side and (8) driver side in wheel well area.	$1,945
3320-0079	SCBA Bottle Storage. (7) Fire Shopp SCBA bottle storage with hinged doors with push button latches (wired to door ajar). (4) officer side and (3) driver side in wheel well area.	$1,704
3320-0080	SCBA Bottle Storage. (2) Fire Shopp SCBA bottle storage with hinged doors with push button latches. Located centered in driver side wheel well area.	$550
3320-0081	Vision Mark tags (2) for driver side wheel well area SCBA bottle storage. Tags to have red letters on white background. (1) Tag forward inboard tube to read "WATER EXTINGUISHER". (1) Tag rearward inboard tube to read "DRY CHEM".	$91
3330-0053	Folding Step. Location [#LOC]. Step include integral lights. Each location requires a minimum of (1) handrail per NFPA.	$133
3330-0055	Steps rear. Steps include integral lights. Includes folding steps on officer side (staggered stepped as applicable with tailboard depth) for additional hosebed access and handrail mounted on officer side upper hosebed side (as applicable).	$397
3330-0104	Dual lighted LED folding steps rear NFPA. Includes folding steps on officer side (staggered stepped as applicable with tailboard depth) for additional hosebed access and handrail mounted on officer side upper hosebed side (as applicable).	$350
3330-0105	Dual lighted LED folding step. Location: [#LOC]. Each location requires a minimum of (1) handrail per NFPA.	$107
3330-0118	Steps rear. Steps include integral LED lights. Includes (6) folding steps - (3) on driver side and (3) on officer side (staggered stepped as applicable with tailboard depth) for additional hosebed access and handrail mounted on driver and officer side upper hosebed side (as applicable).	$588
3330-0173	Step bolt on, 19.9" X 8" gator grip stepping surface shall be mounted [#LOC].	$274

3340-0004	Hosebed above the booster tank. Includes forward hosebed and tower(s) cover plate work (as applicable). Hosebed adjustable divider extrusion rearward of the furthest tower is to run full width of the hosebed (as is practical with other hosebed mounted equipment).	$1,453
3340-0015	Diamond plate single axle wheel well. Includes bolt-on composite wheel well liners and aluminum trim fenderettes.	$1,000
3340-0035	Divider Long. To run full length of hose bed (front to rear).	$441
3340-0049	Hosebed storage pan. Locate in forward area of hosebed.	$663
3340-0062	Divider medium. To run full length of hose bed (front to rear) behind single fill tower.	$396
3340-0063	Divider short. To run full length of hose bed (front to rear) behind dual fill towers or single set back fill tower.	$332
3340-0074	Body mainframe and hosebed side assemblies for a 85" high body.	$1,049
3340-0075	Body mainframe and hosebed side assemblies for a 90" high body.	$2,095
3340-0077	Body compartment Interiors to have Zolatone gray finish. To include pan of hinged doors (as applicable). Does not include floors if they are dia plt.	$4,713
3340-0080	Bolt-on diamond plate 18" tailboard (full width of body). Includes (2) squared off beavertails (no stanchions) with removable outer panels and handrails- (2) vertically on trailing edge of body and horizontally mounted handrail(s) below hosebed.	$836
3340-0083	Bolt-on diamond plate tailboard (full width of rear compartment). Includes the enhanced extended side compartment frame work with diamond plate compartment tops, (1) officer side lower area folding step. Driver side includes (1) upper hosebed mounted handrail (as applicable) and handrails- (2) vertically on trailing edge of body and horizontally mounted handrail(s) below hosebed.	$746
3340-0088	Smooth plate single axle wheel well painted job color. Includes bolt-on composite wheel well liners.	$1,451
3340-0093	Mud flaps, rear, black with E-ONE logo.	$145
3340-0117	Bolt-on diamond plate 12" tailboard (full width of body). Includes (2) squared off beavertails (no stanchions) with removable outer panels and handrails- (2) vertically on trailing edge of body and horizontally mounted handrail(s) below hosebed.	$674
3340-0121	Full length driver side tunnel. Reduces driver side upper compartment depths to 12" deep IPO 26". Tunnel includes access door at rear.	$1,268
3340-0125	Recess mounting for directional light bar. Located on rear area of body.	$356
3340-0128	Bolt-in partition walls. Locate in lower rear compartment transverse area. Partitions to separate the side rear compartments from the rear compartment.	$209
3340-0132	Diamond plate single axle wheel well. Includes fenderettes and bolt-on aluminum wheel well liners painted job color.	$1,997
3340-0145	Rubrail for the body and pump area module(s).	$672
3340-0151	Dri-Dek Brand [#COL] floor matting covering all applicable body compartment floors, shelves, and rollout trays.	$1,478
3340-0173	Backboard storage box. Located in the officer side of the hosebed (full length). Includes vertically hinged door (wired to door ajar) w/push-button latch and composite flooring. Box to hold: (2) backboards. The box to have an open area (top access) to the rear of the backboards in remaining hosebed area.	$450
3340-0376	Diamond plate single axle wheel well. Includes fenderettes and bolt-on aluminum wheel well liners sanded finish.	$1,807
3340-0383	Body main frame and hose bed side assemblies for an 83" high pumper body.	$1,049
3340-0386	Mateflex brand [#COL] floor matting covering all applicable compartment floors, shelves, and roll-out trays.	$1,542
3340-0387	Full width of hose bed stainless steel transverse storage divider. Located in forward area of hose bed to separate equipment items such as a generator, etc. from the main hose storage area. Main hose bed dividers will be located rearward of the transverse divider.	$663
3340-0388	Brushed stainless steel rubrails for the sides of the body below the lower side compartments.	$672
3340-0389	Stainless steel rear fender panels painted job color. (Recommended for FRP paint process compatibility!) Includes bolt-on stainless steel inner wheel well liners (not painted) and polished stainless steel outer fenderettes.	$1,451
3340-0405	Sign, "STAY BACK 500 FEET" with black reflective lettering. Locate below rear of body.	$118
3340-0406	Sign "Stay Back 150 Metres" with black reflective lettering. Locate below rear of body.	$118
3340-0445	Backboard storage. Storage for (1) backboard in officer side storage tunnel against hosebed side wall. Includes stop bracket.	$159
3340-0465	Pass thru between B1 and R3 compartments to allow room for booster reel motor for B1 mounted booster reel.	$238
3340-0479	Upper rear corner on each side of body to have diamond plate cover.	$120
3340-0488	Divider long for use with hosebed preconnect. Divider to be set back and/or notched at forward area of hosebed for access to preconnect line connection.	$441

3340-0576	Mateflex brand [#COL] floor matting covering all applicable compartment floors, shelves, and roll-out trays.	$933
3340-0626	Body mainframe and hosebed side assemblies for a 94" high body.	$3,144
3340-0636	Fill Tower support bracket to be held 1/4" back from fill tower and attached to front hosebed wall.	$105
3340-0637	Cover plates around rear frame mounted tow eyes in B1 compartment.	$105
3340-0643	Stainless steel trim for lower edge of rear mudflap (PR). The trim shall be 2" in height and go full width of the mudflap. The material shall be "polished" stainless steel and it will be mounted to the lower edge of the rear (back side) of the mudflaps.	$280
3340-0650	Fill tower partition. "U" shaped partition to be located around water fill tower and extend rearward to bolt to rear surface of storage pan. This 1/8" diamond plate "hat" section shall provide fill tower protection within the hose bed.	$286
3340-0652	Stainless steel trim for lower edge of front mudflap (PR). The trim shall be 2" in height and go full width of the mudflap. The material shall be "polished" stainless steel and it will be mounted to the lower edge of the rear (back side) of the mudflaps.	$280
3340-0662	Recessed fuel fill with flat latching stainless steel door. Door style to match SCBA doors.	$244
3340-0664	Backboard storage box. Located in the officer side of the hosebed. To hold (1) backboard with access from a vertically hinged diamond plate door with a lift and turn latch. The box to only run the length of the backboards.	$450
3340-0666	Mounting for directional light bar. Located on rear area of body below upper or intermediate step.	$107
3340-0673	Storage box with (2) drop down doors. Diamond plate box to be approx. 136" long x 12" high x 12" deep mounted on officer side compartment top between hosebed side tubes. Includes hinged drop down doors with locking D-ring latches (wire to door ajar).	$841
3340-0683	Hosebed storage pan. Locate in forward area of hosebed. Pan depth shall be approximately 18".	$935
3340-0709	Vertical handrails as mounted the rear body shall extend full height from the bottom of the body to the top of the body IPOS (as practicality permits).	$116
3365-0003	Overhead Zico storage rack to have a job color painted door.	$204
3365-0004	(2) pike pole storage tubes. Locate inboard side of rack with pike pole hooks stored in the up position.	$391
3365-0010	(3) pike pole storage tubes. Locate inboard side of rack with pike pole hooks stored in the up position.	$587
3365-0011	Floor mounted roll-out tray. Includes 250lbs. tray capacity. Mount on [#LOC] floor.	$588
3365-0020	Zico electric drop-down ladder rack. Includes spacer brackets with ladder rack controller located on the officer side pump panel.	$4,424
3365-0025	Attic ladder mounting brackets (PR). Locate [#LOC].	$278
3365-0026	Zico pike pole mounting brackets (PR). Locate on top of Zico drop-down ladder rack.	$147
3365-0027	Zico attic ladder mounting brackets (PR). Locate on top of Zico drop-down ladder rack.	$314
3365-0028	Hard Suction Storage Rack. Driver side compartment top. Includes spring hold downs and scuff plates behind spring mounts (as applicable).	$333
3365-0030	Double hard suction storage rack. Driver side compartment top. Includes spring hold downs with scuff plates (as applicable).	$662
3365-0031	Hard Suction Storage Rack. Officer side in adjustable track above ladders (if applicable). Includes spring hold downs and scuff plates.	$348
3365-0034	(2) aluminum pike pole storage tubes. Locate [#LOC].	$286
3365-0035	Hard Suction Storage Rack. Officer side compartment top. Includes spring hold downs and scuff plates behind spring mounts (as applicable).	$333
3365-0077	(2) pike pole storage tubes. Locate outboard side of rack with pike pole hooks stored in the up position.	$391
3365-0078	(3) pike pole storage tubes. Locate outboard side of rack with pike pole hooks stored in the up position.	$587
3365-0177	Hold down brackets to secure a (3) section extension ladder.	$187
3365-0276	Zico pike pole mounting brackets (PR). Locate on top of Zico drop-down ladder rack. Brackets to be for D-ring pike poles.	$147
3365-0289	Hard suction hose storage tray. Locate on inboard side of overhead ladder rack. Includes spring hold downs and scuff plates behind spring mounts (as applicable).	$389
3365-0297	(1) Pike pole storage tube, pike pole hook stored in the up position. (1) Dry wall hook storage using brackets to secure in place rather than tube. Locate inboard side of rack.	$485
3365-0319	Hard Suction Storage Rack. Driver side compartment top. Includes spring hold downs and scuff plates behind spring mounts (as applicable).	$333
3365-0323	Double hard suction storage rack. Driver side compartment top. Includes spring hold downs with scuff plates (as applicable). Rack shall be cappable of holding 3" hard suction hose.	$662
3370-0025	Permanent shelf. Locate in [#LOC].	$86
3370-0052	Adjustable shelf. For non-transverse compartments that are 16" or greater in depth. Location: [#LOC].	$215

3370-0053	Adjustable shelf. For non-transverse compartments that are up to 15.99" deep. Location: [#LOC].	$109
3370-0054	Tracks for adjustable shelf and/or adjustable tray in compartments 16" or greater in depth. Location: [#LOC].	$167
3370-0055	Tracks for adjustable shelf in shallow compartments up to 15.99" deep. Location: [#LOC].	$85
3380-0014	Roll-out generator tray. Includes tray interlock. Locate [#LOC].	$700
3380-0019	Running board suction tray. Includes removable slats in bottom of tray. Location(s): [#LOC]	$460
3380-0021	Hard suction hose storage tray. Locate on inboard side of overhead ladder rack. Includes (2) securing straps.	$368
3380-0022	Floor mounted roll-out tray. Includes 500lbs. tray capacity. Location: [#LOC].	$767
3380-0023	Adjustable mounted roll-out/tilt-down tray. Location(s): [#LOC]. For use in single depth or rescue style compartments.	$1,245
3380-0024	Adjustable mounted roll-out tray. Includes 250 lbs tray capacity. Location(s): [#LOC]	$844
3380-0025	Adjustable mounted roll-out tray. Includes 500 lbs tray capacity. Location(s): [#LOC]	$1,026
3380-0033	Hard suction hose storage tray. Locate on top of Zico drop-down ladder rack.	$735
3380-0074	Tool board HD adjustable. Includes return style re-enforcing bends on vertical front and rear edges of tool board, upper and lower adjustable track and gas shock actuated. Tool board sized to compartment height and depth as applicable. Location(s): [#LOC]	$774
3380-0076	Floor mounted roll-out tray, with gas spring. 500 lbs. capacity. Location: [#LOC].	$588
3380-0077	Adjustable roll-out tray with 500 lbs. capacity. Location(s): [#LOC].	$844
3380-0079	Adjustable heavy duty tool board. Includes return style reinforcing bends on vertical front and rear edges of tool board, upper and lower adjustable track and gas shock actuated. Tool board sized to compartment height and depth as applicable. Location(s): [#LOC].	$774
3380-0080	Adjustable heavy duty peg tool board. Includes return style re-enforcing bends on vertical front and rear edges of tool board, upper and lower adjustable track and gas shock actuated. Tool board sized to compartment height and depth as applicable. Location(s): [#LOC]	$919
3380-0081	Roll-out generator tray. Includes tray interlock. Locate [#LOC].	$700
3380-0130	Right side running board SS hose tray with Duradek flooring.	$477
3380-0140	Generator rollout tray. Includes tray interlock. For use with Harrison compartment mounted generator. Locate in compartment [#LOC].	$473
3380-0155	Running board suction tray. Includes Turtle Tile brand black floor matting in bottom of tray. Location(s): [#LOC].	$460
3390-0001	Compartment [#LOC] to have the following storage package: (1) vertical partition 20" off forward wall and the following located forward of the partition: (1) floor mntd roll-out tray w/500lb slds and (2) adjustable shelves. Rearward of partition: (2) adjustable heavy duty tool boards.	$2,612
3390-0003	Compartment [#LOC] to have the following storage package: (1) vertical partition 20" off rearward wall and the following located forward of the partition: (1) floor mntd roll-out tray w/500lb slds and (2) adjustable shelves. Rearward of partition: (1) adjustable heavy duty toolboard.	$2,612
3390-0004	Compartment [#LOC] to have the following storage package: (1) vertical partition 20" off forward wall and the following located forward of the partition: (1) floor mntd roll-out tray w/250lb slds, (1) adjustable roll-out tray w/250lb slds and (1) adjustable shelf. Rearward of partition: (3) adjustable tool boards.	$3,918

4000	**Pumps/Tanks**	
4005-0036	Extended Hale Pump 1 Year Warranty in addition to the standard 2 year warranty.	$642
4005-0039	Extended Waterous Pump 3 Year Warranty in addition to the standard 2 year warranty.	$1,552
4005-0053	Hale QMAX-21L 1500 pump. Tradition.	$21,921
4005-0054	Hale Qflo-23L 1250 pump. Tradition.	$17,122
4005-0055	Waterous CS Single Stage Pump.	$20,913
4005-0056	Waterous CSU Single Stage Pump.	$25,574
4005-0059	Hale Qflo-19L 1250 pump. Tradition.	$17,122
4005-0085	Hale QMAX-21L 1750 pump. Tradition.	$21,921
4005-0095	Waterous CM1250 two stage pump. Includes flame-plated impeller hubs. Tradition.	$24,727
4005-0098	Waterous Pump TPP-5 Extended Warranty.	$1,552
4005-0123	Hale QMAX 2000 pump. Special Tradition. Includes 4" set-up for officer side #1 port.	$21,921
4005-0127	Hale QMAX-21L 1500 pump. Tradition.	$21,921
4005-0135	Hale Qflo-23X 1250 pump. Tradition.	$17,122
4005-0148	Hale QMAX-21X 1500 pump. Tradition.	$21,921
4010-0016	530 Gallon "T" Water Tank. Note: Any foam cell(s) will reduce the overall water capacity. Tank capacity is 530 US gallons / 441 Imperial gallons / 2006 Liters.	$5,006
4010-0017	780 Gallon "T" Water Tank. Note: Any foam cell(s) and/or storage options thru the tank will reduce the overall water capacity. Tank capacity is 780 US gallons / 649 Imperial gallons / 2952 Liters.	$5,543
4010-0018	1030 Gallon "T" Water Tank. Note: Any foam cell(s) and/or storage options thru the tank will reduce the overall water capacity. Tank capacity is 1030 US gallons / 857 Imperial gallons / 3898 Liters.	$6,901

4010-0019	1280 Gallon "T" Water Tank. Note: Any foam cell(s) and/or storage options thru the tank will reduce the overall water capacity. Tank capacity is 1280 US gallons / 1065 Imperial gallons / 4845 Liters.	$8,821
4010-0036	780 Gallon "R" Water Tank. Note: Any foam cell(s) and/or storage options thru the tank will reduce the overall water capacity. Tank capacity is 780 US gallon / 649 Imperial gallons / 2952 Liters.	$5,476
4010-0037	1030 Gallon "R" Water Tank. Note: Any foam cell(s) and/or storage options through the tank will reduce the overall water capacity. Tank capacity is 1030 US gallon / 857 Imperial gallons / 3898 Liters.	$6,667
4010-0077	1250 Gallon "T" Water Tank. Note: Any foam cell(s) and/or storage options thru the tank will reduce the overall water capacity. Tank capacity is 1250 US gallons / 1040 Imperial gallons / 4731 Liters.	$8,821
4010-0119	1070 Gallon "T" Water Tank. Note: Any foam cell(s) and/or storage options thru the tank will reduce the overall water capacity. Tank capacity is 1070 US gallons / 890 Imperial gallons / 4050 Liters.	$7,168
4010-0143	780 Gallon "R" Water Tank. Note: Any foam cell(s) and/or storage options thru the tank will reduce the overall water capacity. Tank capacity is 780 US gallon / 649 Imperial gallons / 2952 Liters. Includes modifications for 4x4 and plumbing applications as required.	$6,845
4010-0145	650 Gallon "R" Water Tank. Note: Any foam cell(s) and/or storage options thru the tank will reduce the overall water capacity. Tank capacity is 650 US gallons / 541 Imperial gallons / 2460 Liters.	$4,559
4010-0148	800 Gallon "R" Water Tank. Note: Any foam cell(s) and/or storage options thru the tank will reduce the overall water capacity. Tank capacity is 800 US gallons / 665 Imperial gallons / 3028 liters.	$6,904
4010-0152	745 Gallon "R" Water Tank. Note: Any foam cell(s) and/or storage options thru the tank will reduce the overall water capacity. Tank capacity is 745 US gallon / 620 Imperial gallons / 2820 Liters.	$5,229
4010-0174	530 Gallon "T" Water Tank. UPF Poly III color fill towers. Note: Any foam cell(s) will reduce the overall water capacity.	$5,006
4010-0176	780 Gallon "T" Water Tank. UPF Poly III color fill towers. Note: Any foam cell(s) and/or storage options through the tank will reduce the overall water capacity.	$5,543
4010-0177	780 Gallon "R" Water Tank. UPF Poly III color fill towers. Note: Any foam cell(s) and/or storage options through the tank will reduce the overall water capacity.	$5,476
4010-0178	1030 Gallon "T" Water Tank. UPF Poly III color fill towers. Note: Any foam cell(s) and/or storage options through the tank will reduce the overall water capacity.	$6,901
4010-0179	1030 Gallon "R" Water Tank. UPF Poly III color fill towers. Note: Any foam cell(s) and/or storage options through the tank will reduce the overall water capacity.	$6,667
4010-0180	1280 Gallon "T" Water Tank. UPF Poly III color fill towers. Note: Any foam cell(s) and/or storage options through the tank will reduce the overall water capacity.	$8,821
4010-0212	780 Gallon "R" Water Tank for 4x4 chassis. UPF Poly III with color fill towers. Note: Any foam cell(s) and/or storage options thru the tank will reduce the overall water capacity. Tank capacity is 780 US gallon / 649 Imperial gallons / 2952 Liters. Includes modifications for 4x4 and plumbing applications as required.	$6,845
4010-0214	1030 Gallon "T" Water Tank. UPF Poly III color fill towers. Note: Any foam cell(s) and/or storage options through the tank will reduce the overall water capacity. Tank capacity is 1030 US gallons / 857 Imperial gallons / 3898 Liters. Includes modifications for 4x4 and plumbing applications as required.	$8,626
4015-0002	Mechanical speed counter for Hale pumps.	$279
4015-0007	Pump cooler, 1/4" valve with 3/8" tubing.	$146
4015-0008	Zinc anodes for Hale pump (PR), (1) discharge side and (1) intake side.	$282
4015-0012	Pump shift override, side panel mounted.	$649
4015-0016	Thermal relief valve, Hale TRVL-120.	$1,314
4015-0018	Valve Inlet MIV-E - Hale. Location: [#LOC].	$3,006
4015-0022	Mechanical pump seal - Hale.	$663
4015-0026	Electronic speed counter for Waterous pumps.	$276
4015-0029	Hale pressure relief valve.	$1,138
4015-0037	Engine throttle, vernier.	$316
4015-0039	Pump seal mechanical for Waterous pump.	$624
4015-0041	Valve Monarch Electric - Waterous. Location: [#LOC].	$4,899
4015-0044	Anodes for Waterous pump - (Pair) (1) discharge side and (1) intake side.	$341
4015-0047	Additional Hale Primer Valve. Located: [#LOC].	$532
4015-0056	Air operated master pump drain (upgrade).	$193
4015-0066	Trident Pump Primer W/3 Barrel Push Button Control.	$945

4015-0075	Pump Seal Mechanical - Hale. For use with Tradition Hale pumps.	$2,059
4015-0079	Valve Inlet MIV-E - Hale. Manual Override will be behind the Pump Panel. " Tradition" [#LOC]	$3,006
4015-0082	Electric Over Air Actuation Pump Cooler Valve	$384
4015-0083	Electric Over Air Actuation Engine Cooler Valve	$247
4015-0084	Pump Air Blow Out with 1/4 Snubber Vavlve.	$220
4015-0086	Pump Cooler 1/4 Turn Valve	$230
4015-0087	Engine Cooler 1/4 Turn Valve	$230
4015-0090	Akron Test Port for Master Gauges	$84
4015-0091	Pump cooler with .75" 1/4 turn valve.	$261
4015-0092	Hale Fill Thieft Steamers to be Flush + 2 Location [#LOC]	$1,404
4015-0125	Red Switch Cover on Master Drain Switch.	$11
4015-0131	Hale AnodePro Kit (3) Anodes with Flange. One on each suction tube and one anode on the discharge located as close to the center of the pump as possible.	$993
4015-0133	Anode for Darley pump - (1) intake side.	$369
4015-0159	Valve Inlet MIV-E - Hale. Location: [#LOC].	$3,006
4015-0166	Pump cooler, automatic with 3/8" tubing. Include a check valve that is install between the pump discharge and tank that will automatically close when drafting.	$126
4015-0175	Additional control and air bleeder for the MIV-E to provide controls at: [#LOC].	$483
4020-0002	Dump Valve Mounting Plate	$514
4020-0004	Newton dump mounting plate.	$490
4020-0016	Rear tank dump. Includes stainless steel assembly with manually actuated valve on driver side of dump assembly. Includes integral manual extension chute.	$2,426
4020-0018	Rear tank dump. Includes painted steel assembly with manually actuated valve on top of dump assembly. For use with slip on extension and chute.	$1,201
4020-0056	Tank sleeve for rear discharge.	$238
4100-0000	10 gallon integral foam tank for [#LOC]. Foam tank capacity will reduce the water tank capacity.	$846
4100-0006	40 gallon integral foam tank for [#LOC]. Foam tank capacity will reduce the water tank capacity. Tank capacity is 40 US gallon / 33 Imperial gallons / 151 Liters.	$1,075
4100-0008	20 gallon integral foam tank for [#LOC]. Foam tank capacity will reduce the water tank capacity. Tank capacity is 20 US gallon / 16 Imperial gallons / 75 Liters.	$910
4100-0009	30 gallon integral foam tank for [#LOC]. Foam tank capacity will reduce the water tank capacity. Tank capacity is 30 US gallon / 25 Imperial gallons / 113 Liters.	$986
4100-0025	600 gallon integral foam tank for [#LOC]. Foam tank capacity will reduce the water tank capacity. Tank capacity is 600 US gallons / 499 Imperial gallons / 2271 Liters.	$7,955
4100-0033	30 gallon integral foam tank for [#LOC]. UPF Poly III [#COL] fill tower. Foam tank capacity will reduce the water tank capacity.	$986
4100-0034	10 gallon integral foam tank for [#LOC]. UPF Poly III [#COL] fill tower. Foam tank capacity will reduce the water tank capacity.	$846
4100-0035	20 gallon integral foam tank for [#LOC]. UPF Poly III [#COL] fill tower. Foam tank capacity will reduce the water tank capacity.	$910
4100-0036	40 gallon integral foam tank for [#LOC]. UPF Poly III [#COL] fill tower. Foam tank capacity will reduce the water tank capacity.	$1,075
4100-0053	30 Gallon external foam tank for [#LOC]. UPF Poly III [#COL]. Locate in storage pan.	$2,947
4405-0020	Booster Reel. Reel to have capacity of 200' of 1" (not included). Includes stirrup style rewind switch. Locate rear body compartment.	$2,561
4405-0045	Booster Reel. Reel to have capacity of 200' of 1" (not included). Locate [#LOC].	$2,379
4405-0062	Pump module plumbing to include valve assembly and air actuated control on pump panel. Items for use with PPAO install of rear booster reel including the routing of hose from rear to valve assembly and air blow-out.	$1,161
4405-0064	Booster Reel Akron Model ERWB-16=28. Includes stirrup style rewind switch. Locate rear body compartment. "Hose Not Included" Capacity; up to 150' of .75" or 100' of 1" redline.	$2,561
4405-0065	Booster Reel. Reel to have capacity of 200' of 1" with Electric Valve Control (hose not included). Locate rear body compartment.	$3,035
4405-0083	Booster Reel Akron. Reel to have the capacity of 250' of 3/4 of redline. Includes rewind switch locate next to reel. Locate rear body compartment. "Hose Not Included".	$2,333
4405-0087	Air actuated 1.5" valve and with pump panel mounted controller. For use with dealer installed booster reel and roller assembly in driver side hosebed storage pan area. Connection hose to have extra length so dealer can locate reel to either side of hosebed storage pan. Included to be an air blow-out and (2) panel mounted rewind switches- (1) each side (dealer to make final connections to switches).	$1,123
4405-0100	Booster cord reel rewind switch. Switch located [#LOC].	$103

4405-0105	Air actuated 1.5" valve and with pump panel mounted controller. For use with dealer installed booster reel and roller assembly in officer side hosebed area. Connection hose to have extra length so dealer can locate reel to either side of hosebed area. Included to be an air blow-out and (2) panel mounted rewind switches- (1) each side (dealer to make final connections to switches).	$1,123
4415-0008	1.5" front bumper discharge Akron manual valve.	$1,378
4415-0012	1.5" crosslay with Akron manual valve. Location: [#LOC].	$857
4415-0014	2.5" Left Pump Panel Discharge Akron Manual Valve. Location: [#LOC].	$893
4415-0016	2.5" Right Pump Panel Discharge Akron Manual Valve. Location: [#LOC].	$993
4415-0018	2.5" left front hose bed discharge Akron manual valve.	$1,291
4415-0020	2.5" right front hose bed discharge Akron manual valve.	$1,291
4415-0022	2.5" Left Rear Discharge Akron Manual Valve. Location: [#LOC].	$1,044
4415-0028	2.5" Right Rear Discharge Akron Manual Valve. Location: [#LOC].	$1,044
4415-0034	3" Right Pump Panel Discharge Akron Manual Valve (Waterous pumps noted location to be forward lower port). Location: [#LOC].	$1,435
4415-0038	3" Left Rear Discharge Akron Manual Valve. Location: [#LOC].	$1,613
4415-0041	3" Deck Gun Discharge, Akron manual valve.	$1,464
4415-0054	4" Right Pump Panel Discharge with 3" Akron Manual Valve (Waterous pumps noted location to be forward lower port). Location: [#LOC].	$1,688
4415-0058	2.5" Crosslay Akron Manual Valve. Location: [#LOC].	$1,034
4415-0065	1.5" Double Speedlay with Akron Manual Valves.	$1,681
4415-0102	1.5" Front Bumper Discharge Akron Electric Valve & Navigator 9305	$5,222
4415-0158	3" Left Panel Discharge Top Mount Akron Manual Valve w/30 Degree Droop. (Waterous pumps noted location to be forward lower port.) Location: [#LOC].	$1,808
4415-0161	2.5" Left Panel Discharge Akron Manual Valve w/30 Degree Droop. Location: [#LOC].	$1,122
4415-0164	2.5" Right Panel Discharge Akron Manual Valve w/30 Degree Droop. Location: [#LOC].	$1,122
4415-0165	3" Right Panel Discharge Akron Manual Valve w/30 Degree Droop. (Waterous pumps noted if location is forward of steamer use lower discharge port.) Location: [#LOC].	$1,714
4415-0374	Second 1.5" Front Bumper Discharge Akron Electric Valve & Navigator 9305	$5,222
4415-0474	1.5" Right Discharge Akron Valve in Runningboard Hose Tray, [#LOC].	$893
4415-0517	4" Right Pump Panel Discharge with 3" Akron Manual Valve w/Droop. Location: [#LOC].	$1,968
4415-0550	2.5" Double Speedlay with Akron Manual Valves	$2,064
4415-0552	1.5" Front Bumper Crosslay Discharge Akron Manual Valve.	$1,935
4415-0553	2.5" Left Front Hosebed Discharge Akron Manual Valve located outlet shall be located 13.625" from inside hosebed wall.	$1,291
4415-0555	3" Deck Gun Discharge Akron Manual Valve with no Plumbing from the valve to deck gun channel Dealer to install Extend-A-Gun and Plumbing from the valve to the channel..	$1,360
4415-0569	4" deck gun discharge Akron electric valve.	$4,868
4415-0616	Third Right Front Hosebed Discharge 2.5" Akron Manual Valve.	$1,291
4415-0617	2.5" Left Panel Discharge Akron Manual 3" Valve w/30 Degree Droop Location: [#LOC]	$1,435
4415-0618	2.5" Auxillary Deck Gun Discharge Manual Valve. Plumbed from foam manifold and "Y" into Deck Gun pipe downstream from main Deck Gun discharge valve.	$1,005
4415-0619	4" Right Pump Panel Discharge with 3" Akron Manual Valve. The 4" NST threads shall be a integral part of the valve. (Waterous pumps noted location to be forward lower port.) Location: [#LOC].	$1,688
4415-0665	1.5" Front Bumper Discharge Akron Electric Valve & Navigator 9315	$5,222
4415-0671	1.5" double speedlays with Akron manual valves.	$1,681
4415-0718	1.5" Single Speedlay with Akron Manual Valves to hold a 100ft of 1.75.	$910
4415-0726	1.5" Front Bumper Discharge Akron Electric Valve & Navigator 9315 with Pressue Reading only.	$3,185
4415-0767	2.5" Right Panel Discharge Akron Manual 3" Valve w/30 Degree Droop Location: [#LOC]	$1,435
4415-0808	2.5" Left Rear Discharge w/3" Akron Manual Valve. Include 3" plumbing to terminate with 2.5" threads.Location: [#LOC]	$1,613
4415-0809	4" Pump Panel Discharge w/4" Akron Electric Valve Location: right side discharge 1	$4,101
4415-0847	Akron 635 Swivel with turning vane Located on Top of Bumper officer's side of center tray for Front Bumper Discharge	$148
4415-0880	2.5" Left Panel Discharge Elkhart Unibody Manual 3" Valve w/30 Degree Droop Location: [#LOC]	$1,435
4415-0881	2.5" Right Panel Discharge Elkhart Unibody Manual 3" Valve w/30 Degree Droop Location: [#LOC]	$1,435
4415-0903	1.5" Front Bumper Crosslay Discharge Akron Manual Valve	$2,027

4415-0904	2" front bumper discharge Elkhart Electric valve. Include Elkhart electric valve, plumbing, and harness from the valve to joystick control located in cab console. Discharge to terminate and capped off just below the center of the bumper for dealer supplied and installed joystick, and bumper turret.	$2,125
4415-0916	4" Deck Gun Discharge Akron Valve Handwheel Control.	$4,028
4415-0918	1.5" Front Bumper Crosslay Discharge Elkhart Unibody Manual Valve	$1,935
4415-0919	Deck gun monitor 3" Gemini manual hand wheel model 34700011 and nozzle 2.5" NH Excel model 51471000.	$3,056
4415-0923	4" Right Pump Panel Discharge with 3" Akron Manual Valve. Include a 4"FNST swivel x 4"MNST 30 degree droop adapter, and cap. Location: [#LOC].	$1,968
4415-0924	2.5" Single Speedlay with Akron manual valve located at lower storage area offset to rear.	$1,154
4415-0925	All Discharge/Intake caps, and plug to be Kochek brand and Powder coated. Color; White.	$523
4415-0938	2.5" Left Pump Panel Discharge Akron Manual Valve. w/Chrome plated valve face. Location: [#LOC].	$1,007
4415-0939	2.5" Right Pump Panel Discharge Akron Manual Valve. w/Chrome plated valve face. Location: [#LOC].	$1,007
4415-0940	3" Right Pump Panel Discharge Akron Manual Valve w/Chrome Plated valve face (Waterous pumps noted location to be forward lower port). Location: [#LOC].	$1,550
4417-0073	Deck Gun 12" Extend-A-Gun 3"	$1,760
4417-0088	Bleeder drain valve plumbed to: [#LOC].	$102
4417-0099	Akron Wireless Deck Gun Remote Monitor Controller.	$1,410
4417-0118	Discharge Elbow 3" 45Deg 3"FNPT X 2.5"MNST with cap. Location on rear discharge IPOS.	$169
4417-0120	Adapter Chrome Reducer 2.5"FNST x 1.5"MNST w/Cap. [#LOC].	$84
4417-0138	Officer side pump panel shall have polished stainless steel split escutcheon plates mounted in place for each discharge/intake. The escutcheon plates will be fastened in place to allow quick disassembly to permit the hinge to operate.	$213
4417-0140	Crosslay 1 valve control to electric 9313 comtroller.	$1,633
4430-0014	Hale 2.1A FoamLogix foam system.	$6,274
4430-0015	Hale 3.3 FoamLogix foam system.	$13,328
4430-0018	1600 Hypro/FoamPro foam system.	$7,276
4430-0019	2001 Hypro/FoamPro foam system.	$11,819
4430-0020	2002 Hypro/FoamPro foam system.	$15,065
4430-0079	The foam system performance shall be tested and certified in compliance with 2009 NFPA 1901.	$252
4430-0113	The foam system shall be factory tested at, minimum, maximum, and midrange.	$252
4432-0105	A/B Foam Selector locate Driver side walk way recess in box on diamond plate panel at front of module.	$152
4432-0144	Foam ready Manifold for a Hale Foam Logix or a Foam Pro system- plumbed to Crosslay #1, Driver side 2.5" discharge, Hose reel, and (1) 2.5" outlet for dealer install bumper monitor. W/3" plumbing	$1,905
4432-0159	CAFs system drains shall be extended to the officer's side pump panel area.	$307
4432-0165	Special design foam/water manifold to allow dealer supplied foam system to be plumbed to crosslay 1, crosslay 2 and rear discharge so they are foam ready.	$3,358
4435-0001	Class 1 Intelli-Tank water tank level gauge.	$428
4435-0002	Class 1 Intelli-Tank foam tank level gauge.	$443
4435-0013	4.5" Class 1 compound pressure gauge (30-0-600 PSI).	$169
4435-0014	Dual Read 4.5" Pressure Gauge (30-0-600 psi/100-0-4140 KPA).	$253
4435-0015	2.5" Class 1 compound pressure gauge (30-0-600). Discharge(s): [#LOC].	$121
4435-0016	Dual Read 2.5" Pressure Gauge (30-0-600 psi/100-0-4140 KPA). Discharge: [#LOC].	$171
4435-0025	Flowminder Super System. Discharge: [#LOC].	$2,412
4435-0047	Class 1 Tank Level Intel Water Gauge, Additional. Location: [#LOC].	$492
4435-0063	Duplex Master Gauge for CAFS or Industrial Foam Systems.	$455
4435-0067	Class 1/Whelen PSTank Water Tank Level Gauge Package. Location of Whelen PSTank Strip-Lights: [#LOC].	$1,635
4435-0069	Class 1 Enfo IV system on pump operator's panel.	$818
4435-0090	Additional PSTank Level Strip-Light. Located: [#LOC].	$391
4435-0120	Duplex Master Gauge (0-400 PSI) for CAFS or Industrial Foam Systems.	$455
4435-0152	2.5" Class 1 Pressure Gauge (30-0-600). Discharge with Black Face and White Letters: [#LOC]	$128
4435-0155	Dual Read 4.5" Span Pressure Gauge (30-0-600 psi/100-0-4140 KPA)	$253
4435-0156	Class 1 Intelli-40 Tank Water Tank Level Gauge with Blue LED's.	$641
4435-0157	Class 1 Intelli-40 Tank Foam Tank Level Gauge with Red LED's.	$612
4435-0161	Dual Read 4.5" Pressure Gauge (30-0-400 psi/100-0-2758 KPA)	$253
4435-0186	Class 1 Tank Level Intelli 40 Water Gauge Additional Location: [#LOC]	$707
4435-0187	Class 1 Intelli-40 Tank Water Tank Level Gauge with Red LED's.	$657

4435-0210	PSTank Level Strip-Light Pair Located: [#LOC] (Chassis only option require sale codes for gauge and driver)	$784
4440-0004	2.5" side suction top mount control handle Akron manual valve. Location: [#LOC].	$1,289
4440-0005	2.5" Left Intake Akron Manual Valve.	$972
4440-0006	2.5" right intake Akron manual valve.	$972
4440-0014	5" front intake without valve.	$3,093
4440-0016	5" right rear intake, no valve.	$2,361
4440-0060	5" Rear Intake with no valve. Located below officer side storage tunnel. Includes short handle cap (ship looses).	$2,903
4440-0130	2.5" Right Intake w/3" Akron Manual Valve. Location: (REAR OF STREAM)	$1,486
4440-0131	2.5" Right Side intake Akron manual valve. Locate valve down low and the handle to be horizontally.	$1,119
4440-0137	2.5" side suction top mount control handle Akron manual valve with chrome plated end. Location: [#LOC].	$1,332
4440-0138	2.5" right intake Akron manual valve with chrome plated end.	$1,015
4440-0140	2.5" right intake Akron manual valve, located rear of steamer IPO standard location.	$972
4445-0004	Front intake swivel 5" polished chrome.	$1,838
4445-0005	Front intake swivel 6" polished chrome.	$1,911
4445-0007	Intake adapter 5" FNPT x 6" MNST for front intake.	$460
4445-0009	Intake relief valve, Akron.	$403
4445-0016	Intake relief valve, Hale 2.5".	$555
4445-0020	Intake Adapter 5" FNST x 6" MNST for Front Intake	$460
4445-0022	Intake adapter 5" FNPT x 6" MNST for rear intake.	$460
4445-0024	Intake adapter 5" FNPT x 5" MNST for front intake.	$342
4445-0025	Intake Adapter 5" FNPT x 5" MNST for Rear Intake.	$342
4445-0038	Waterous Intake Pressure Relief Valve.	$1,272
4445-0039	Intake Adapter 2-1/2"MNST X 3" FNST Swivels with plug.	$211
4445-0043	Mechanical Tachometer Counter Connection on the Driver Side Pump Panel.	$180
4445-0049	Intake relief valve outlet to be extended to the side of the truck under the front body compartment. Includes tag that reads "Intake Pressure Relief Outlet - Do Not Cap".	$249
4445-0050	Intake adapter 5" FNPT x 6" MNST for rear intake.	$460
4450-0010	2" tank fill Akron manual valve.	$966
4450-0014	Direct 2.5" water tank fill with Akron valve. Location: [#LOC].	$1,171
4450-0020	2.5" rear direct tank fill. Location: [#LOC].	$1,168
4450-0022	3" tank to pump Akron manual valve.	$1,017
4450-0026	5" Rear Jet Dump No Valve. Include 1-1/2" inline valve and high pressure hydraulic hose connected to the 1-1/2" internal tank piping which runs to the rear of the booster tank.	$1,955
4450-0030	Newton Directional Chute. Includes chute support bracket and support bolts mounted each side on trailing edge of body/beavertails.	$1,405
4450-0031	Electric actuated dump valve includes 18" electric telescopic extension and switch.	$4,728
4450-0094	Driver side lower pump panel mounted 2.5" direct tank fill.	$1,855
4450-0101	Newton Dump with electrically actuated valve and manually actuated chute. Electric dump valve control to be located to the driver side rear within reach from the ground.	$4,280
4450-0103	Direct Rear 2.5" Water Tank Fill with 2.5"Check Stainless steel Technocheck Valve. Location: [#LOC]	$960
4450-0104	6" Rear Gravity Dump No Valve	$2,257
4450-0106	6" Rear Jet Dump w/6" Electric/Air Butterfly Valve with Control Switchs in Cab and Pump operator panel side Rear.	$3,231
4450-0113	5" Rear Jet Dump (No valve). For use with a center slam strip rear end.	$1,764
4450-0115	Newton Dump with Electric Operated Valve.	$3,352
4450-0119	3" tank to pump Akron manual valve w/4" plumbing.	$1,036
4450-0120	2.5" Rear Tank Inlet. Includes Water Level Gauge Located in B1 Compartment	$1,253
4450-0121	3" Tank To Pump Akron Air Actuated Valve w/4" Plumbing.	$1,424
4450-0122	3" Tank To Pump Akron Electric Actuated Valve w/4" Plumbing	$2,926
4450-0128	Officer side lower pump panel mounted 2.5" direct tank fill. Not available with with rear intake or front intake with auxiliary intake offset to rear.	$1,855
4450-0133	3" Tank To Pump Akron Air Actuated Valve w/4" Plumbing	$1,424
4450-0134	3" Tank To Pump Akron Manual Valve Hand Wheel Control w/4" Plumbing	$2,556
4450-0158	Rear tank dump. Includes stainless finish steel assembly with electrically actuated valve. For use with slip on extension and chute. Includes Slip-on stainless steel dump extension and chute with beavertail mounted removable support arm bracket and tailboard mounted storage tray (officer side) with retaining straps.	$4,728

4450-0160	Bush Pack 1" Fill with 1" Cam-Lock fitting located on pump operator pump panel. Include a 3' length of 1" clear hose.	$358
4450-0163	Direct 3" water tank fill. Location: Driver side pump panel.	$1,371
4450-0166	Additional 3" Tank To Pump Akron Manual Valve w/4" plumbing. Shall include internal plumbing to the rear of the tank into the rear sump on officer side.	$1,873
4450-0170	Rear tank dump. Includes stainless finish steel assembly with electrically actuated valve. For use with slip on extension and chute. Includes beavertail mounted removable support arm bracket. Slip-on stainless steel dump extension with tailboard mounted storage tray (officer side) with retaining straps and chute mounted in B1 compartment above the dump.	$4,728
4450-0197	6" Rear Jet Dump 36" Extension Chute w/6" Female Cam Lock.	$789
4450-0199	Reverse push/pull handle on 3" tank to pump Akron manual valve. The "in" position will be open and the "out" position will be closed.	$47
4450-0208	Rear Tank Inlet 3". Includes Water Level Gauge Located in B1 Compartment.	$1,572
4460-0002	Hose reel blow-out, primary.	$224
4460-0034	Cab jack access door. Located on officer side pump panel in upper rearward area. Includes twist and turn latch.	$225
4460-0044	Cab jack access door. Located on officer side pump panel in forward area. Includes twist and turn latch.	$225
4460-0067	Officer side pump panel shall include an access door to provide access to the cab tilt switch and manual jack as mounted.	$171
4465-0005	Class 1 Captain pressure governor.	$2,555
4465-0011	Class 1 TPG pressure governor. Includes, water, oil, volt and tachometer.	$1,969
4475-0000	Pump certification 750-2250 GPM	$2,265
5000	**Electrical**	
5010-0002	Multiplex electrical system for pumper / tanker / rescue.	$3,059
5010-0003	Multiplex modem kit. Includes cable, modem, and adapter harness.	$801
5010-0004	Multiplex data logger.	$568
5010-0013	Vehicle data recorder - 2009 NFPA compliant. Includes occupant detection with display. Display location: [#LOC].	$2,252
5010-0014	Vehicle data recorder for commercial cab - 2009 NFPA compliant. Includes occupant detection with display. Display location: [#LOC].	$1,297
5010-0015	Additional CrewGuard display for use with VDR. Location: [#LOC].	$433
5010-0024	Modem for use with the E-ONE multiplex electrical system.	$559
5010-0053	Vehicle data recorder for commercial cab - 2009 NFPA compliant. Includes occupant detection shown in multiplex display.	$830
5010-0059	VFD Text display for V-MUX electrical system. Location: [#LOC].	$694
5100-0000	Foot switch to control air horns located [#LOC].	$103
5100-0001	Switch circuit three way. Includes (1) additional switch. An additional switch required for more than two locations. Location: [#LOC].	$145
5100-0006	Foot switch to control Q2B located [#LOC].	$103
5100-0007	Foot switch to control electronic siren located [#LOC].	$103
5100-0011	Switch 12V for 120-240V (EA). Location: [#LOC].	$373
5100-0022	Push-button hose reel switch. Location: [#LOC].	$161
5100-0029	Stirrup style hose reel switch. Location: [#LOC].	$161
5100-0050	Push button testswitch for tank level gauge, push button wired "hot" to batteries to allow checking tank level in fire station without having to power up truck electrical system. Located on operator pump panel.	$304
5100-0068	Switch button for Q2B siren. Locate on dash control panel area within reach of the [#LOC] position. Label as space permits.	$165
5100-0088	Linemaster Twin 491-S foot switch to control air horns and Q2B located [#LOC].	$331
5100-0089	Foot switch to control electric fire bell located [#LOC].	$103
5100-0090	Foot switch to control Scream Eagle siren located [#LOC].	$103
5100-0091	Switch 12V for 110-240V (EA). Location: cab switch panel for rear body quartz light(s).	$373
5100-0095	Switching controlled through the Multiplex display for 120-240V devices (EA). The 120-240V Multiplex switching utility shall be used for: [#LOC].	$373
5100-0098	Switch additional rocker lock-out safety style. Location and function: [#LOC].	$175
5110-0010	Receptacle 12V 175A portable winch. Located at rear near trailer hitch.	$311
5110-0017	Back-up alarm 97 dB.	$89
5110-0042	Trailer wiring and connector for 2009 NFPA 1901 Type I, Type II or Type III trailer. Includes model 12-907 connector on body. Stop/turn/tail circuits shall be connected, remaining wires to be coiled up for future use. Trailer end 12-906 shipped loose.	$406
5110-0043	Back-up alarm Federal Reactor model 210350 self-adjusting.	$157

5110-0052	12V power distribution module. Includes (6) battery hot and (6) switched hot circuits. 100 amps max (IATS). Location: [#LOC].	$269
5110-0067	Back up alarm Preco 97 dB(A) warble tone.	$236
5110-0069	Back up alarm ECCO model 410 97 dB(A) grommet mount.	$181
5110-0073	12V Outlet on officer side in cab.	$150
5110-0079	Back up alarm Ecco model SA917 87-112dB.	$207
5110-0087	Tekonsha model Prodigy 2 trailer brake controls wired to connector. Control located in cab accessible to driver. Requires 9-pin connector.	$776
5110-0089	Back-up alarm Ecco model 575 107dB.	$152
5110-0112	Back up alarm Preco model 1040.	$157
5110-0132	Indicator light. Color: Green. Location and function: driver side overhead for jake brake "on".	$101
5130-0001	Cord reel electric with 200' of 10/3 black cable. Locate [#LOC].	$1,892
5130-0002	Cord reel electric with 200' of 10/3 yellow cable. Location(s): [#LOC].	$2,136
5130-0003	Cord reel electric with 200' of 10/4 black cable. Location: [#LOC].	$2,130
5130-0004	Cord reel electric with 200' of 10/4 yellow cable. Location [#LOC].	$2,764
5130-0006	Cord reel rollers mounted on reel in [#LOC].	$308
5130-0007	Cord connector. Daniel Woodhead 3 wire NEMA 5-15 straight blade female located on cord for reel in [#LOC].	$71
5130-0008	Cord connector. Daniel Woodhead 3 wire NEMA L5-15 twist lock female located on cord for reel in [#LOC]	$73
5130-0009	Cord connector. Daniel Woodhead 3 wire NEMA L5-20 twist lock female located on cord for reel in [#LOC].	$100
5130-0010	Cord connector. Daniel Woodhead 4 wire NEMA L14-20 twist lock female located on cord for reel in [#LOC].	$100
5130-0012	Junction box Circle-D with four (4) 3-wire NEMA L5-15 110 volt 15 amp twist lock receptacles. Located on cord for reel in [#LOC].	$652
5130-0013	Junction box Circle-D with four (4) 3-wire NEMA L5-20 110 volt 20 amp twist lock receptacles. Located on cord for reel in [#LOC].	$652
5130-0014	Circle D wall/floor mounting box. Locate box for use with reel in or on [#LOC].	$127
5130-0015	Junction box Circle-D with two (2) 15 amp straight blade and two (2) 20 amp twist lock receptacles. Located on cord for reel in [#LOC].	$823
5130-0022	Cord reel rollers mounted through panel. Location(s): [#LOC].	$308
5130-0024	Electric cord reel rewind switch. Switch located [#LOC].	$103
5130-0026	Cord connector. Fire Power 3 wire 20A/110V female located on cord for reel in [#LOC].	$521
5130-0027	Cord connector. Duraline 4 wire 20A/220V female located on cord for reel in [#LOC].	$137
5130-0028	Cord reel rollers mounted on reel.	$308
5130-0030	Junction box Circle-D with one (1) straight blade and three (3) twist lock receptacles. Located on cord for reel in [#LOC].	$823
5130-0033	Junction box Circle D with four (4) 3-wire NEMA 5-15 110 Volt 15 amp straight blade receptacles. Located on cord for reel in [#LOC].	$652
5130-0035	Junction box Circle-D with (3) L5-15 and (1) L5-20 110Volt twist lock receptacles. Located on cord for reel in [#LOC].	$652
5130-0038	Junction box Circle-D with (2) L5-20 twist lock and (2) 5-20 110Volt straight blade duplex receptacles. Located on cord for reel in [#LOC].	$652
5130-0041	Cord reel rollers bracket mounted on top of [#LOC].	$308
5130-0042	Junction box Circle-D with four (4) 3-wire Nema 5-20 110Volt 20 Amp duplex receptacles. Located on cord for reel in [#LOC].	$722
5130-0044	Junction box Akron with (2) 5-20 125v 20 Amp duplex recepts and (2) L5-20 125v 20 Amp twist lock recepts. Located on cord for reel in [#LOC].	$512
5130-0045	Akron model EJB-VMT-TP mounting box. Locate box for use with reel in or on [#LOC].	$249
5130-0046	Junction box Circle-D with one (1) 5-20 straight blade and three (3) L5-20 twist lock receptacles. Box wired as 240v with individual circuit breakers on box. Located on cord for reel in [#LOC].	$823
5130-0048	Junction box Circle-D with (2) NEMA 5-20 120V GFCI duplex and (2) NEMA L6-20 220V twist lock receptacles. Located on cord for reel in [#LOC].	$823
5130-0057	Mounting box for Woodhead junction box. Locate box for use with reel in or on [#LOC].	$233
5130-0059	Junction box Circle-D with four (4) FirePower FP11 110Volt 20 Amp receptacles. Located on cord for reel in [#LOC].	$1,063
5130-0061	Cord reel electric with 250' of 10/3 black cable. Locate [#LOC].	$2,233
5130-0062	Junction box Circle-D with (2) 5-20 straight blade and (2) twist lock receptacles; (1) L5-20 and (1) L5-15. Located on cord for reel in [#LOC].	$823
5130-0063	Cord reel electric with 200' of 12/3 black cable. Locate [#LOC].	$2,233
5130-0067	Junction box Akron with (4) 5-20-GFCI 125v 20 Amp duplex recepts. Includes 12" pigtail with L14-20 connector and rubber feet. Located on cord for reel in [#LOC].	$512

5130-0070	Cord connector. Hubbell 4 wire NEMA L14-20 twist lock female located on cord for reel in [#LOC]	$100
5130-0080	Junction box Circle-D with four (4) 3-wire NEMA L5-20 110 volt 20 amp GFCI twist lock receptacles. Located on cord for reel in [#LOC].	$823
5130-0081	Cord reel electric model ECR 1620-17-18 with 200' of 10/4 yellow cable. Location [#LOC].	$2,764
5130-0083	Slideout cord reel roller assembly. For cord reel located in [#LOC].	$857
5130-0084	Junction box Circle-D with one (1) 15 amp straight blade and three (3) 15 amp twist lock receptacles. Located on cord for reel in [#LOC].	$823
5130-0087	Cord connector. Daniel Woodhead 4 wire NEMA L14-30 twist lock female located on cord for reel in [#LOC].	$141
5150-0007	Whelen 600 series LED vertical mount tail lights. Includes LED stop/tail, arrow turn and halogen back-up lights with vertical Cast 3 housing and weatherproof connectors.	$1,158
5150-0017	License plate light LED with chrome housing located at the rear of the body.	$119
5150-0022	Marker light LED body package. Commercial pumper bodies only.	$706
5150-0023	Weldon Model 1010 LED / incandescent tail lights. Includes red LED stop/tail, amber LED turn and clear incandescent back-up.	$485
5150-0025	Marker light LED body/cab package. E-One custom cab and pumper or tanker body only.	$1,184
5150-0042	Federal Signal LED tail lights. Includes 4" diameter red LED stop/tail, amber turn and LED clear back-up.	$508
5150-0059	Federal Signal QuadraFlare LED vertical mount tail lights. Includes LED stop/tail, arrow turn and back-up lights with vertical Cast 3 housing and weatherproof connectors.	$1,008
5150-0080	Weldon auxiliary turn signal model 9186-8580 LED (PR). Location: [#LOC].	$248
5150-0082	Whelen 600 series LED vertical mount taillights. Includes LED stop/tail, arrow turn in vertical Cast 3 housing with 900 series halogen backup lights down low and weatherproof connectors.	$1,538
5150-0085	Marker light Weldon LED body package. Commercial pumper bodies only.	$618
5150-0099	LED marker light cab and body package. E-ONE custom cab and SS body vehicles.	$1,184
5150-0100	Marker light LED body package. Commercial chassis with SS body vehicles.	$706
5150-0107	Whelen arrow turn signals, front and rear as applicable, to be set to sequential flash pattern.	$21
5150-0126	Marker light LED cab package. E-One custom cab only.	$679
5150-0127	Whelen M6 series LED vertical mount tail lights. Includes LED stop/tail, arrow turn lights with vertical 3 light housing (PR) with M9LZC Super LED scene lights (PR), with chrome flanges and weatherproof connectors.	$2,300
5150-0130	License plate light LED with chrome housing located at the rear of the body driver side down low.	$119
5150-0133	License plate light LED with chrome housing located at the rear of the body below B1 entry door.	$119
5150-0134	License plate light incandescent with chrome housing located at the rear of the body.	$119
5200-0001	Breaker box 12 place single phase. Includes main breaker. Note: If gen is 6KW or less, main will occupy 2 places leaving 10 available. Locate [#LOC].	$792
5250-0017	Generator Honda EM5000SXK with 4.5KW continuous output. Generator location: [#LOC].	$5,499
5250-0037	Generator Smart Power 8KW hydraulic model HR-8 (with top mount cooler). Includes generator control/PTO engagement switch and a gauge panel located adjacent to the circuit breaker box. Generator location: [#LOC].	$14,095
5250-0043	Dealer installed generator. Option includes space only. Dealer responsible for NFPA required 3rd party generator testing.	$267
5250-0131	Generator toggle switch (IPOS keyed switch). Located: [#LOC].	$175
5255-0001	3rd party generator test with pump.	$80
5260-0002	Remote control starting kit for Honda EM3800SX, EM4000, EM5000SX and EM6500SX generators. Locate [#LOC].	$644
5260-0004	Generator prewire for dealer supplied and installed 5 KW portable generator. Includes 12 volt wiring and cable between breaker box. Prewire to [#LOC].	$242
5260-0006	Compartment door(s) of compartment mounted generator to have interlock.	$180
5260-0014	Oil drain valve with tube extending below officer side pump panel.	$188
5260-0020	Compartment door(s) of compartment mounted electric dump valve to have interlock.	$180
5260-0021	Oil drain valve with tube extending below driver side pump panel.	$188
5260-0025	Generator prewire for dealer supplied and installed 3.5 KW portable generator (Honda or other with equivalent dimensions). Includes 12 volt wiring and A/C cabling to breaker box. Prewire to [#LOC].	$242
5300-0021	Light bar Federal Signal JetSolaris 60" LED. Red Solaris reflectors with clear domes. NFPA compliant. Does not require 2 addl side facing bars. Location: Centered on the front cab roof.	$2,384
5300-0024	Light bar Federal Signal Aerodynic 25RQL-Fast 52" with red/clear lens. Location: Centered on the front cab roof.	$1,382
5300-0053	Light bar Whelen Freedom model FN66QLED 66" with MKEZ7 mounts. All LED light bar without rear facing LEDs. Location: Centered on the front cab roof.	$3,414
5300-0055	Light bar Whelen Freedom model FN72QLED 72" LED with MKEZ7 mounts and clear lenses. Location: Centered on the front cab roof.	$3,502

5300-0099	Light bar Federal Signal JLX21 LED (PR). Located side facing only. Location: [#LOC].	$1,671
5300-0104	Light bar Whelen Freedom model FN66QLED 66" with MK9 mounts. All LED light bar without rear facing LEDs. Location: Centered on the front cab roof.	$3,414
5300-0151	Light bar Whelen Freedom model FN66VLED 66" with MKEZ7 mounts. All LED light bar. Location: Centered on the front cab roof	$3,414
5300-0195	Light bar Federal Signal JetStream 60" LED. Red driver/Blue officer Solaris reflectors. Location: Centered on the front cab roof	$2,091
5300-0237	Light bar Whelen Freedom model FN66QLED 66" with 3M 9592 Opticom (switched on dash panel) and MKEZ7 mounts. All LED light bar without rear facing LEDs. Driver side red lights and officer side to be blue (standard white center) Location: Centered on the front cab roof.	$5,059
5300-0294	Light bar Whelen Freedom model FN72QLED 72" LED with MK8H mounts. Centered on the front cab roof.	$3,454
5300-0297	Light bar Whelen Freedom model FN66QLED 66" with MKEZ7 mounts. All LED light bar without rear facing LEDs. Driver side red LED, officer blue LED. Location: Centered on the front cab roof.	$3,414
5300-0298	Light bar Whelen Freedom model FN72QLED 72" LED with MKEZ7 mounts. Location: Centered on the front cab roof.	$3,502
5300-0303	Light bar Whelen Freedom model FN66QLED 66" with MKEZ7 mounts. Includes (10) red LED with red lenses and (2) white LED with clear lenses. Location: Centered on the front cab roof.	$4,075
5300-0318	Light bar risers (PR) for the light bars installed on the top of the cab to insure 360 degree visibility. The riser shall raise the as mounted light bar(s) approximately 4" to prevent interference with the brow lighting (if so equipped) and ensure 360 degree visibility is maintained.	$172
5300-0331	Light bar Federal Signal JetSolaris 60" LED. Clear/white Solaris reflectors with red domes. NFPA compliant. Does not require 2 addl side facing bars. Location: Centered on the front cab roof.	$2,384
5300-0344	Light bar Whelen Justice model JE0NFPA 62" LED with clear lenses and MKEZ7 mounts. N/A on Vista roofs with front facing windows. Includes (4) red corner facing LIN6 LED lights, (6) forward facing CON3 Linear LED lights; (4) red, (2) white. Location: Centered on the front cab roof.	$2,196
5310-0000	Light bar Federal Signal, Signal Master SML6. Location: installed at the rear of the apparatus.	$789
5310-0002	Light bar Federal Signal Signal Master SMLED6.	$1,347
5310-0025	Directional light circuit wiring through upper level warning.	$68
5310-0045	Light bar Federal Signal Signal Master Viper EXT LED 31" with 6 lights.	$1,422
5350-0001	Camera back-up Safety Vision LCD model SV-CLCD70BA-625B with audio. For use with up to 2 cameras.	$1,836
5350-0158	Camera back-up Safety Vision LCD model SV-CLCD70B-625B with audio. Located in cab dash on bracket (see photos).	$1,836
5350-0169	Camera back-up Safety Vision LCD model SV-CLCD-64-810 with lens shutter that opens when the unit is put in reverse.	$1,899
5350-0181	Camera back-up Safety Vision LCD model SV-CLCD70BA-620A with audio. For use with up to 2 cameras.	$1,971
5350-0192	Safety Vision back-up camera wired through multiplex display. Video displays automatically when transmission is in reverse. Camera only - does not include monitor.	$803
5380-0008	Compartment light package incandescent for small bodies.	$447
5380-0009	Compartment light package incandescent for medium bodies.	$667
5380-0011	Compartment light package LED for small bodies.	$1,593
5380-0012	Compartment light package Truck-Lite LED for medium bodies.	$2,664
5380-0027	Ground light package for cab and body - small.	$415
5380-0029	Ground light package for cab and body - large.	$622
5380-0030	Ground light package LED - small.	$1,356
5380-0032	Ground light package LED - large.	$2,030
5380-0064	Compartment light package Federal Signal LED for small bodies.	$1,274
5380-0065	Compartment light package Federal Signal LED for medium bodies.	$2,166
5380-0068	Ground light package Federal Signal LED - large.	$2,031
5380-0078	Compartment light Amdor Luma-Bar LED 26-42" long additional (EA). Locate [#LOC].	$211
5380-0079	Compartment light Amdor Luma-Bar LED 48-74" long additional (EA). Locate [#LOC].	$321
5380-0085	Compartment light package incandescent for small bodies.	$447
5380-0111	Compartment light Amdor LED for medical cabinet (EA).	$211
5380-0138	Compartment light ROM V3 LED 24-36" long additional (EA). Locate [#LOC].	$234
5380-0140	Compartment light ROM V3 LED for medical cabinet (EA).	$288
5380-0141	Compartment light package ROM V3 LED for medium bodies. Includes one light per compartment (two if transverse).	$2,611
5380-0161	Light recessed step Truck-Lite incandescent. Locate one each side of top mount walkway.	$212
5380-0162	Light recessed step Truck-Lite LED. Locate one each side of top mount walkway.	$322
5380-0209	Compartment light Amdor LED for medical cabinet (PR).	$422
5380-0210	Compartment light ROM V3 LED for medical cabinet (PR).	$575

5380-0216	Ground light package LED for chassis. Includes (6) Trucklite LED lts.	$1,167
5380-0217	Compartment light Whelen Fluorent Plus for medical cabinet (PR).	$597
5380-0220	Compartment light package, Whelen Fluorent Plus, for medium bodies. Includes two lights per compartment (four if transverse).	$6,488
5390-0000	Deck light - Unity 12 volt (PR). Location: [#LOC].	$328
5390-0001	Hose bed light Unity. Locate at front area of hose bed. Switched with work light switch in cab.	$158
5390-0003	Hose bed light Truck-Lite. Locate at the front area of the hose bed. Switched with work light switch in cab.	$95
5390-0005	Crosslay light deck Unity. Locate to rear of crosslay (SM) or forward of crosslay (TM).	$155
5390-0007	Deck/scene light circuit wiring through chassis reverse. Requires rear deck or scene light.	$68
5390-0008	Federal Signal GH scene lights (PR). Switch in cab (driver and officer side facing lights switched separately). Locate [#LOC].	$386
5390-0020	Whelen 900 series Gradient Opti-Scenelight (PR) with weatherproof connectors. Switched in cab (driver and officer side facing lights switched separately). Locate [#LOC].	$305
5390-0022	Crosslay light Truck-Lite. Locate to rear of crosslay (SM) and forward of crosslay (TM as applicable). Switched with work light switch in cab.	$95
5390-0025	Cab scene lights are to be switched with cab doors in addition to standard.	$68
5390-0036	Hose bed light circuit wiring through chassis reverse. Requires hose bed light.	$68
5390-0129	Hose bed light FRC LED900 with diamond plate mounting box. Locate [#LOC]. Switched with worklight switch in cab.	$812
5390-0131	Crosslay light deck Unity. Locate light on the drivers side rearward of the crosslay door mounted on the Hot Shot II pan cover lid.	$155
5390-0132	Warning light Federal Signal QL64-BACKUP (PR) white with clear lens. Surface mounted with bezel. Location: [#LOC]	$543
5390-0133	Deck light - Unity 12 volt LED (PR). Location: [#LOC].	$895
5390-0143	Crosslay light deck Unity. Locate to driver side rear of crosslay.	$155
5390-0144	Unity deck light with model TP-1-I internal pull-up pole. Includes switch on lighthead and driver side overhead console. Location: [#LOC].	$526
5400-0003	Engine compartment light (EA).	$111
5400-0005	Pump panel LED light package with (2) Whelen strip lights per side pump panel. Not available on panels over 45" wide. Side mount only.	$706
5400-0010	Incandescent pump compartment light (EA).	$120
5400-0011	LED pump compartment light (EA).	$325
5400-0020	Federal NightFighter light with internal pole. Locate [#LOC]. Switched on light head.	$1,130
5400-0031	Pair of Cab Dome Large Lights mounted driver and officer side front. N/A on E-One Chassis. Required on Comm Chassis.	$66
5400-0032	Pair of Cab Dome Large Lights mounted driver and officer side Rear. N/A on E-One Chassis or two door commercial chassis. Required on Comm Chassis.	$66
5400-0033	Cab Dome Lts Red/White 4" incandescent. White light wired through door and light assembly mounted rocker switch. Red light through light assembly mounted rocker switch.	$506
5400-0037	Dome Lts Red/White Incandescent. Package includes two lights mounted in the front and two mounted in the rear of the cab. White light wire through door and light assembly mounted switch. Red light through light assembly mounted switch.	$486
5400-0038	Spotlights, 6" Unity (PR) cab post mount.	$398
5400-0039	Spotlight Specialty 2150 hand held located on officer's side of cab dash - hardwired.	$340
5400-0042	Map light, Sunnex [#LOC].	$290
5400-0065	Map light, Littlite 18" flexible LED. Location: [#LOC].	$225
5400-0081	Golight model 2067 remote control spot light with white housing. If one is selected it will be located centered on cab roof on a pedestal to rear of light bar. If two are selected, they will be located one each side of cab roof to rear of light bar.	$751
5400-0092	Weldon pump panel LED light package with (3) lights per side pump panel. Pump panels over 45" may require additional lights. Side mount only.	$825
5400-0097	Maplight-Havis Shield 12" Flex LED. Location: [#LOC].	$218
5400-0104	Spotlight Specialty 2150 hand held located on officer's side, side facing engine cover offset forward below cab dash - hardwired.	$340
5400-0107	Weldon pump panel LED light package - top mount. Includes (2) lights per side pump panel and (3) lights for top mount panel. Side pump panels over 45" wide may require additional lights. Top mount only.	$932
5400-0108	Cab Dome Large Lights mounted centered over front seat. N/A on E-0ne Chassis. Required on Comm Chassis.	$34
5400-0126	Side mount pump module LED lighting. Includes (3) pump panel lights - (2) driver side and (1) officer side.	$328

5400-0127	Top mount pump module LED lighting. Includes (3) lights located along the upper top mount control panel, (2) side pump panel lights - (1) driver side and (1) officer side and (2) top mount walkway lights.	$752
5400-0130	Spotlight Optronics Blue Eye model KB4000 hand held located on officer's side of cab dash - hardwired.	$203
5400-0134	Federal NightFighter Light with Internal Pole. Locate driver and officer side of pump module rearward of TM control panel.	$2,260
5400-0145	Pair of Cab Dome Large Lights mounted driver (clear) and officer (red) side front. N/A on E-One Chassis. Required on Comm Chassis.	$66
5400-0148	Maplight-Little Lt 12" Flex LED. Location: [#LOC].	$225
5400-0151	Pump compartment light EON LED. Wired to work light.	$194
5400-0154	Spotlight Specialty 2150 hand held located on center of cab dash with plug-in connector.	$340
5400-0155	Cab Dome Large Light (PR). (1) mounted centered centered in the front and rear headliners. N/A on E-0ne Chassis. Required on Comm Chassis.	$66
5400-0157	Spotlight Whelen PAR46 Super LED hand held located on officer's side of cab dash - hardwired.	$559
5400-0158	Spotlights, 6" Unity LED (EA) cab post mount. Location: Officer side cab A post.	$464
5400-0164	Spotlights, 6" Unity LED (PR) cab post mount.	$928
5400-0165	Pump compartment light EON LED. Light shall be switched from the cab dash with the work light switch.	$194
5400-0168	Whelen LED pump compartment light (EA).	$247
5400-0173	Spotlight Whelen PAR46 Super LED hand held located on officer's side of cab dash with plug-in connector.	$559
5450-0008	Quartz light Fire Research Focus 750W/110V model FCA510E-S75-SW with internal pull-up pole. Location(s): [#LOC].	$1,347
5450-0009	Quartz light Fire Research Focus 750W/110V model FCA530-S75-SR-SW with side mount push-up pole. Location(s): [#LOC].	$1,422
5450-0015	Quartz light Fire Research Focus 750W/110V model FCA600-S75-ON-FC603 with 40" telescopic tripod pole. Location(s): [#LOC].	$1,441
5450-0019	Quartz light Fire Research Focus 750W/110V model FCA802-S75-01 with brow mount. Location(s): [#LOC].	$814
5450-0030	Quartz light Fire Research Optimum 750W/110V model OPA600-S75-ON-OP603 with 40" telescopic tripod pole. Location(s): [#LOC].	$1,455
5450-0048	Quartz light MagnaFire 750W/120V model KR-936-I with internal pole. Location(s): [#LOC].	$932
5450-0049	Quartz light MagnaFire 750W/120V model KR-SB-536-W/2-I with external pole. Location(s): [#LOC].	$1,185
5450-0052	Quartz light MagnaFire 750W/120V model KR-1536 with cab brow mount. Location(s): [#LOC].	$739
5450-0079	Quartz light MagnaFire 750W/120V model KR-1536 with cab brow mount. Light head and mount to be powder coated black. Location(s): [#LOC].	$782
5450-0088	(Obsolete from vendor)Quartz light MagnaFire 70W/12V model KR-SB-631 without pole. Includes switch on warning light switch panel in cab. Location(s): [#LOC].	$1,387
5450-0093	(Obsolete from vendor)Quartz light MagnaFire 70W/12V model KR-3551 with cab brow mount. Includes switch on warning light switch panel in cab. Quest cab only. Location(s): [#LOC].	$1,276
5450-0094	Quartz light Extenda-Lite 750W/110V model E-4750-EX-TL-UI-EX. Location(s): [#LOC].	$774
5450-0115	Light Whelen 12 volt Pioneer Plus model PFP1 with brow mount. Includes switch in cab (driver and officer side facing lights switched separately). Location(s): [#LOC].	$1,400
5450-0125	Quartz light MagnaFire 5000 750W/120V model KR-2556 with cab brow mount. Location(s): [#LOC].	$739
5450-0127	Quartz light Fire Research Focus 150W/12V model FCA802-H15-01 with brow mount. Includes switch accessible to driver. Location(s): [#LOC]	$1,329
5450-0130	Quartz light MagnaFire 750W/120V model KR-2556 with cab brow mount. Location(s): [#LOC]. Not available in front center due to DOT lights.	$739
5450-0131	Light Whelen Pioneer Plus model PFP2 12V with internal top raise pole mount (ROM model KR-9PFP2-S). Includes switch on light head. Location: [#LOC].	$1,813
5450-0133	Quartz light Fire Research Focus 1000W/240V model FCA510E-M12-SW with internal pull up pole. Location(s): driver and officer side of pump module rearward of crosslays.	$2,972
5450-0135	Quartz light Fire Research Focus 150W/12V model FCA802-H15-01 with brow mount. Light head and mount to be powder coated black. Includes switch accessible to driver. Location(s): [#LOC].	$1,367
5450-0144	Fire Research Evolution 12V LED scene light model FCA530-V15-SW-H with external push-up pole. Includes switch in cab accessible to driver. Location: [#LOC].	$2,062
5450-0154	Fire Research Evolution 12V LED scene light model FCA510E-V15-SW with internal pull-up pole. Includes switch accessible to driver. Location: [#LOC].	$2,062

5450-0155	Fire Research Evolution 12V LED scene light model FCA802-V15 with brow mount. Includes switch accessible to driver (driver and officer side facing lights switched separately). Location: [#LOC].	$1,775
5450-0156	Quartz light Fire Research Evolution 12V LED model FCA300U-V15 with brow mount. Includes switch accessible to driver. Location: center of cab brow.	$1,711
5450-0161	Light Whelen 12V Pioneer model PCP2 with internal push-up pole mount (Havis KR-SB-4PCP2-S-I). Includes switch on light head. Location(s): [#LOC].	$2,083
5450-0173	Light Whelen Pioneer model PFP1 12V with internal top raise pole mount (ROM model KR-9PFP1-I). Includes switch accessible to driver. Location: [#LOC].	$1,320
5450-0177	(Replaced with sales code 5450-209)Quartz light Fire Research Spectra 12V LED model SPA830-Q20 powder coated black with brow mount. Includes switch accessible to driver. Location: [#LOC].	$2,199
5450-0190	Fire Research Spectra 12V LED model SPA260-Q15 with surface mount. Includes switch accessible to driver. Location: [#LOC].	$1,661
5450-0191	Light Fire Research Spectra 120V LED model SPA600-K20-ON-SPA603 with 40" telescopic tripod pole. Location(s): :[#LOC].	$2,844
5450-0193	Light Fire Research Spectra LED 110V model SPA510-K20 with internal pull-up pole. Location(s): [#LOC].	$2,201
5450-0197	Light Whelen Pioneer model PFP2 12V powder coated FLNA3225E-1 red with internal top raise pole mount (ROM model KR-9PFP2-S). Includes switch on light head. Location: [#LOC].	$1,900
5450-0201	Light Fire Research Spectra LED 12V model SPA570-Q20 without pole. Includes switch accessible to driver (driver and officer side facing lights switched seperately). Location(s): [#LOC].	$2,280
5450-0202	Quartz light Fire Research Spectra 120V LED model SPA260-K15 with surface mount. Includes switch accessible to driver (driver and officer side facing lights switched separately). Location: [#LOC].	$2,007
5450-0209	Quartz light Fire Research Spectra 12V LED model SPA802-Q20-02 powder coated black with brow mount. Includes switch accessible to driver. Location: [#LOC].	$2,199
5450-0221	Quartz light MagnaFire 5000 750W/120V model KR-2556 with cab brow mount. Light head to be powder coated black. Location(s): [#LOC].	$809
5450-0223	Quartz light MagnaFire 750W/120V model KR-SB-536-W/2-I with external pole. Light head to be powder coated black. Location(s): [#LOC].	$1,230
5460-0013	Command Light light tower model CL 605. Includes (6) 500 watt quartz halogen lights and a green strobe. Location: [#LOC].	$18,434
5470-0000	Receptacle twist lock 15A/110V 3 wire NEMA L5-15 with cover plate. Location: [#LOC].	$274
5470-0001	Receptacle twist lock 20A/110V 3 wire NEMA L5-20 with cover plate. Location: [#LOC].	$286
5470-0003	Receptacle household 15A/110V duplex 3-prong NEMA 5-15 with cover plate. Location: [#LOC].	$249
5470-0004	Receptacle household 20A/110V duplex 3-prong NEMA 5-20 with cover plate interior mounted wired to inlet receptacle. Location: [#LOC].	$269
5470-0016	Receptacle shoreline 30A/110V with auto transfer switch. The receptacle shall be located [#LOC].	$920
5470-0017	Receptacle household 20A/110V duplex 3-prong NEMA 5-20 with cover plate. Location: [#LOC].	$260
5470-0042	Auto-Eject receptacle inlet 30 amp 120 volt with auto transfer switch. The receptacle shall be located [#LOC] and with a [#COL] cover.	$1,338
5470-0051	6 outlet household 20A/110V power strip wired to inlet receptacle. Location: [#LOC].	$187
5470-0053	Receptacle inlet 110 VAC, 20 Amp twist lock with a [#COL] cover. Location: [#LOC].	$250
5470-0055	Receptacle household 15A/110V duplex 3-prong NEMA 5-15 with cover plate. This receptacle shall be GFCI protected and have a push button reset on the receptacle. Location: [#LOC].	$271
5470-0057	Receptacle household 20A/110V duplex 3-prong NEMA 5-20 with cover plate interior mounted wired to generator (not wired to inlet/shoreline). Location: [#LOC].	$260
5500-0009	Federal PA300 electronic siren recessed mounted.	$622
5500-0011	Federal Q2B siren - Pedestal mounted on bumper. Location: [#LOC].	$2,396
5500-0015	Whelen model 295SLSA1 siren with microphone (replaced 295HFSA1).	$824
5500-0048	Federal PA300 100W siren recessed mounted.	$582
5500-0051	Federal PA300R siren with single control. PA control and volume switch located on electrical access panel.	$747
5500-0052	Federal PA640 electronic siren recessed mounted.	$622
5500-0066	Whelen model 295SLSA1 siren without microphone.	$824
5510-0013	Speaker Federal Dynamax MS100-EF thru bumper. Location: [#LOC].	$482
5510-0015	Speaker Federal Dynamax MS100. Located Officer's side behind Tow hook. Navistar 4400 chassis only with '07 engine.	$482
5510-0028	Speaker Federal Dynamax ES100. Located Officer's side behind Tow hook. Navistar 4400 chassis only with '07 engine.	$482
5510-0029	Speaker, Federal Signal Dynamax ES100 with "E-ONE" grille through bumper. Location: [#LOC].	$482

5510-0041	Speaker, Federal Signal Dynamax ES100. Location: [#LOC].	$482
5510-0045	Speaker, Federal Signal Dynamax ES100 with "E-ONE" grille. Location: [#LOC].	$482
5550-0052	Flash rate for Federal LED lower level warning lights to be set at pattern 2, alternating triple flash (102 TFPM).	$79
5550-0059	Whelen Super LED lower level warning light package. Includes (8) red 600 LED light heads and (2) red 500 LED light heads w/chrome flanges. Locate side facing lights: [#LOC].	$2,544
5550-0067	Flash rate for Federal QuadraFlare LED lower level warning lights to be set at pattern 4, alternating quad flash (75 QFPM).	$79
5550-0088	Whelen 900 series Super LED upper level rear panel warning light package. Includes (2) red Whelen 900 Super LEDs lights, model 90RR5FRR. Includes weatherproof connectors. Located (1) driver and (1) officer upper rear corners.	$993
5550-0106	Whelen Super LED lower level warning light package. Includes (6) 600 red LED light heads, (2) 400 amber LED light heads and (2) 500 red LED light heads w/chrome flanges. Locate side facing lights: [#LOC].	$2,427
5550-0128	Whelen Super LED lower level warning light package. Includes (6) red 600 LED light heads, (2) red LIN3 lights and (2) red 500 LED light heads w/chrome flanges. Locate side facing lights: [#LOC].	$2,544
5550-0178	Whelen Super LED lower level warning light package with clear lenses. Includes (8) red 600 LED light heads and (2) red 500 LED light heads w/chrome flanges. Locate side facing lights: [#LOC].	$2,544
5550-0183	Whelen M6 Super LED lower level warning light package. Includes (8) red M6R LED light heads and (2) red TIR3 LED light heads. Locate side facing lights: [#LOC].	$2,835
5550-0192	Federal Signal QuadraFlare LED lower level warning light package. Includes (8) QL64XF-R LED light heads with bezels and (2) IMPAXX LED model IPX302-4 light heads. Locate side facing lights: [#LOC].	$2,018
5550-0193	Federal Signal QuadraFlare LED lower level warning light package. Includes (6) QL64XF-R LED light heads with bezels and (4) IMPAXX LED model IPX302-4 light heads. Locate side facing lights: [#LOC].	$1,873
5550-0194	Federal Signal QuadraFlare LED lower level warning light package. Includes (4) QL64XF-R LED light heads, (4) QL64XF-B LED light heads, (1) IMPAXX LED model IPX302-3 light head and (1) IMPAXX LED model IPX302-4 light head. Lights to alternate red/blue around unit; see specification. Locate side facing lights: [#LOC].	$2,055
5550-0210	Federal Signal QuadraFlare LED lower level warning light package. Includes (8) Quadraflare light heads, (7) QL64XF-R (red) LED lights and (1) QL64XF-B (blue) LED light with bezels and (2) IMPAXX LED model IPX302-4 light heads. Locate side facing lights: [#LOC].	$2,018
5550-0212	Whelen 900 series Super LED upper level rear panel warning light package. Includes (2) Whelen 900 Super LED lights with clear lens. (1) red model 90RRF5CR driver's side and (1) blue model 90BBF5CR officer's side. Includes weatherproof connectors. Located upper rear corners.	$993
5550-0213	Whelen Super LED lower level warning light package. Includes (6) red 600 LED light heads, (2) red LIN3 lights and (2) red 500 LED light heads w/chrome flanges and clear lenses. Locate side facing lights: [#LOC].	$2,544
5550-0216	Whelen 900 series Super LED upper level rear panel warning light package with clear lens. Includes (1) red, (1) blue Whelen 900 Super LEDs lights. Includes weatherproof connectors. Located (1) red on driver and (1) blue on officer upper rear corners.	$993
5550-0220	Federal Signal QuadraFlare LED lower level warning light package. Includes (6) QL64XF-R LED light heads with bezels and (4) IMPAXX LED model IPX602-R light heads. Locate side facing lights: [#LOC].	$2,250
5550-0229	Federal Signal QuadraFlare LED lower level warning light package. Includes (4) QL64XF-R LED light heads with bezels and (6) IMPAXX LED model IPX302-4 light heads. Locate side facing lights: [#LOC].	$1,873
5550-0233	Whelen Super LED lower level warning light package. Includes (6) red 600 LED light heads, (2) red LIN3 lights and (2) red 500 LED light heads w/chrome flanges. Locate side facing lights: [#LOC].	$2,544
5550-0238	Federal Signal QuadraFlare LED lower level warning light package. Includes (3) QL64XF-R LED light heads, (3) QL64XF-B LED light heads, (2) IMPAXX LED model IPX302-3 light head and (2) IMPAXX LED model IPX302-4 light head. Lights to alternate red/blue around unit; see specification. Locate side facing lights: [#LOC].	$2,055
5550-0242	Whelen Super LED lower level warning light package. Includes (8) 600 LED light heads (6) Red/Blue (2) Red /White with clear lenses and (2) red 500 LED light heads with clear lenses and chrome flanges. Locate side facing lights: [#LOC].	$2,876
5550-0244	Whelen M6 Super LED lower level warning light package. Includes (8) split red/clear M6D LED light heads and (2) red TIR3 LED light heads. Locate side facing lights: [#LOC].	$3,000

5550-0248	Federal Signal QuadraFlare LED lower level warning light package with clear lenses. Includes (8) QL64XFC-R LED light heads with bezels and (2) IMPAXX LED model IPX300-4 light heads. Locate side facing lights: [#LOC].	$2,018
5550-0250	Whelen Super LED lower level warning light package. Includes (4) red 600 LED light heads, (4) red LIN3 lights and (2) red 500 LED light heads w/chrome flanges. Locate side facing lights: [#LOC].	$2,191
5600-0034	Federal model SY12FS Sentry (PR) with [#COL] domes. Location: [#LOC].	$347
5600-0078	Whelen Super LED beacon (PR) model L31H with [#COL] domes. Location [#LOC].	$1,674
5600-0080	Whelen beacon with LED upper beacon and 700 series Super LED (PR) model B6LED with red domes and [#COL] LEDs. Location: [#LOC].	$2,565
5600-0086	Whelen beacon model RB6T (PR) with [#COL] domes. Location: [#LOC].	$359
5600-0090	Warning light Federal Signal QuadraFlare QL64XF LED (PR) red. Surface mounted with bezel. Location: [#LOC].	$543
5600-0094	Warning light Federal Signal QL64XF LED (PR) amber. Surface mounted with bezel. Location: [#LOC].	$543
5600-0105	Hazard (door ajar) light 2" LED. Location: [#LOC].	$31
5600-0130	Whelen model UFM8 LED flasher (PR). Flashers will control lower level warning lights ipo internal flashers. Locate (1) in cab and (1) in body.	$997
5600-0135	Whelen Super LED beacon Model L31H with [#COL] domes. Location [#LOC].	$536
5600-0136	Federal MicroEscape LED beacon (PR) with [#COL] lenses. Location: [#LOC]. Requires additional upper level warning or Signal Master.	$1,818
5600-0173	Federal MicroEscape NFPA compliant LED beacons (PR) clear lenses with [#COL] LED reflectors. Location: [#LOC].	$1,357
5600-0177	Whelen model UFM8 LED flasher (3). Flashers will control warning lights ipo internal flashers. Locate (1) in cab and (2) in body.	$1,496
5600-0226	Warning light Federal Signal Model 360501-04 LED w/ bezel (PR). Surfaced mounted with red lens. Location: [#LOC].	$359
5600-0284	Whelen Super LED beacon (PR) model L31H with blue driver, red officer LED and clear domes. Location [#LOC].	$1,674
5600-0288	Whelen red TIR3 LED light heads (2). Locate in rubrail below L1 and R1.	$258
5600-0294	Warning light Federal Signal IMPAXX model IPX600-R red LED w/ bezel (PR). Surfaced mounted with clear lens. Location: [#LOC].	$419
5600-0299	Warning light Federal Signal IMPAXX LED model IPX302-4 w/ bezel (PR). Surfaced mounted with red lens. Location: [#LOC].	$287
5600-0303	Whelen Super LED beacon (PR) model L31H with [#COL] domes. Location [#LOC].	$1,674
5600-0314	Federal Signal Vision LED rotating beacons model VSLR-IPX-R1R21 with rear facing IPX6 red LED warning light (Requires additional rear facing warning lights for NFPA compliance). Location: [#LOC].	$2,095
5600-0320	Warning light Whelen ION series Super LED (2) red and (1) white with clear lens. Location: [#LOC].	$820
5600-0330	Warning light Federal Signal IMPAXX model IPX602-R red LED w/ bezel (PR). Surfaced mounted with red lens. Location: [#LOC].	$419
5600-0331	Federal Signal Vision LED rotating beacons model VSLR-R with red LED warning light(s) and red lenses (Requires additional rear facing warning lights for NFPA compliance). Location: [#LOC].	$1,565
5600-0334	Warning light Whelen IONWR series Super LED red in color. Location: [#LOC].	$563
5600-0343	Whelen red TIR3 LED light heads (2). Locate in rubrail below pump module offset forward.	$258
5600-0345	Warning light Federal Signal IMPAXX LED model IPX300-4 w/ bezel (PR). Surfaced mounted red LEDs with clear lens. Location: [#LOC].	$287
5600-0349	Whelen red TIR3 LED light heads (2). Locate on front cab hood corners, one (1) each side. Commerical chassis only.	$258
7000	**Loose Equipment**	
7600-0005	Pike Pole Fiberglass 6'.	$123
7600-0006	Pike Pole Fiberglass 8'.	$81
7600-0007	Pike Pole Fiberglass 10'.	$156
7600-0008	Pike Pole Fiberglass 12'	$165
7600-0016	Wheel chocks 44" NFPA complaint, pair (PR) of Zico SAC-44. Up to 44" diameter tires. Includes mounting brackets.	$465
7700-0004	Hard suction hose 6" with Pyrolite couplings.	$936
7700-0023	Booster Hose 100' x 1" Reeltex (Each) Niedner Reeltex fabric booster hose with couplings.	$610
7700-0108	Hose booster rubber 1" X100' Red in color with couplings Darley part number AC696.	$570
7800-0002	Alco-Lite FL-10, 10' folding ladder without shoes.	$228
7800-0003	10' folding Duo-Safety 585-A ladder.	$356

7800-0004	Aluminum Cast Bracket for Duo Safety Folding Ladder - For 8' or 10'	$379
7800-0007	Alco-Lite PRL-14' roof ladder.	$389
7800-0008	14' roof ladder, Duo-Safety 775-A.	$537
7800-0010	Alco-Lite PRL-16' roof ladder.	$466
7800-0014	Alco-Lite PEL-16 Extension Ladder	$631
7800-0016	Alco-Lite PEL-24' 2-section extension ladder.	$794
7800-0017	Alco-Lite PEL3-24 Extension Ladder	$1,145
7800-0018	Extension ladder, Duo-Safety 900-A, 24' 2-section.	$853
7800-0021	Alco-Lite PEL-28' extension ladder.	$1,031
7800-0023	Alco-Lite PEL3-35' 3-section extension ladder.	$1,403
7800-0025	Duo-Safety 1225-A 35' 3-section extension ladder.	$1,421
7800-0028	Alco-Lite PEL-14 14' 2-Section Extension Ladder.	$610
7800-0032	Alco-Lite FL-10, 10' folding ladder w/safety shoes.	$228
7800-0041	Duo-Safety 1200-A, 28' 2-section extension ladder.	$1,047
7800-0044	Alco-Lite PEL-12 Extension Ladder	$534
7800-0045	Duo-Safety 1200-A 35' 2 Section Extension Ladder	$1,316
7800-0047	Duo-Safety 925-A 26' 3 Section Extension Ladder	$948
7800-0067	Duo-Safety 10' 775-A Roof Ladder	$323
7800-0069	Alco-Lite PEL3-35P Extension Ladder w/Stay Poles.	$1,484
7800-0070	Alco-Lite PEL3-30 3 Section Extension Ladder	$1,188
7800-0077	Duo-Safety 925-A 22' 3 Section Extension Ladder	$929
7800-0078	Alco-Lite FL-10, 10' folding ladder without shoes and handles.	$228
7800-0080	Aluminum Cast Bracket for Alcolite Folding Ladder - For 8' or 10'	$379
7900-0010	Chrome Barrel Strainer 6" NST.	$305
7900-0011	Strainer Bracket 6"	$94
7900-0014	DOT Required Drive Away Kit - Kit includes three (3) triangular warning reflectors with carrying case. This kit is for the end user and is to remain with the truck.	$25
7900-0156	Multiplex adapter kit. Includes 6' harness with 9 pin plug/Deutsch ends and a USB to CAN interface module.	$264
7900-0157	Junction box Circle-D with four (4) 3-wire NEMA L5-20 110 volt 20 amp twist lock receptacles. Includes 3' pig tail with 20A TL connector.	$652
7900-0158	Junction box Circle-D with (2) 15 amp straight blade and (2) 20 amp twist lock receptacles. Includes 3' pig tail with 20 amp twist lock connector.	$823
7900-0159	Junction box Circle-D with (2) 15 amp straight blade and (2) 20 amp twist lock receptacles. Includes 20 amp twist lock inlet connector.	$823
7900-0167	Junction box Circle-D with (1) 20 amp straight blade and (3) 20 amp twist lock receptacles. Includes 3' pig tail with 20 amp twist lock connector.	$823
7900-0228	V-MUX Electrical system diagnostic kit.	$763
7900-0229	Zinc Plated Strainer Basket 6"	$218
8000	**Paint & Lettering**	
8100-0071	Undercoating E-ONE.	$260
8100-0088	Painted trim stripe on chassis wheels (per axle). Color to be: [#COL].	$157
8100-0100	Special paint break. See sketch / drawing / photo in sales file.	$171
8100-0122	Cab paint FLNA 3225 Red. International.	$152
8100-0123	Cab Paint FLNA 3035 Red. International. Tradition.	$152
8100-0124	Cab Paint FLNA 3047 Red. International. Tradition.	$152
8100-0125	Cab paint FLNA 3221 red. International. Tradition.	$152
8100-0126	Cab Paint FLNA 4006 White. International.	$152
8100-0127	Cab Paint FLNA 4095 White. International. Tradition.	$152
8100-0128	Cab Paint FLNA 6051 Lime Green International.	$152
8100-0129	Cab Paint FLNA 6257 Lime Green. International.	$152
8100-0130	Cab Paint FLNA 6074 Lime Green. International.	$152
8100-0132	Cab paint two tone. Upper FLNA 4006 white International.	$743
8100-0133	Paint Cab FLNA 1219 Yellow. International	$152
8100-0134	Paint Cab FLNA 1218 Yellow. International	$152
8100-0135	Paint Cab Dupont L769467 EG Red	$152
8100-0137	Cab paint two tone. Upper FLNA 4145 black. International.	$743
8100-0139	Cab paint two tone. Upper FLNA 4006 white / lower FLNA 6257 lime green. International.	$743
8100-0140	Cab paint two tone. Upper FLNA 4006 white / lower FLNA 6074 lime green. International.	$743
8100-0154	Paint upper Cab DuPont 767681 EG Black. Freightliner.	$1,537
8100-0155	Cab paint two-tone DuPont L0006 EG White (Upper). Freightliner.	$1,537
8100-0158	Cab paint two-tone DuPont L0006 EG White (Upper) P2450 EG Red (Lower). Freightliner.	$1,537
8100-0159	Cab paint two-tone DuPont L0006 EG White (Upper) P2451 EG Red (Lower). Freightliner.	$1,537

8100-0160	Cab paint two-tone DuPont 767681 EG Black (Upper) L6636 EG Red (Lower). Freightliner.	$1,537
8100-0161	Cab paint two-tone DuPont L0006 EG White (Upper) P2518 EG Lime Green (Lower). Freightliner.	$1,537
8100-0162	Cab paint two-tone DuPont L0006 EG White (Upper) P2454 EG Lime Green (Lower). Freightliner.	$1,537
8100-0163	Cab paint two-tone DuPont L0006 EG White (Upper) P2519 EG Lime Green (Lower). Freightliner.	$1,537
8100-0164	Cab paint two-tone DuPont 767681 EG Black (Upper) L6572 EG Red (Lower). Freightliner.	$1,537
8100-0169	Painted stripe - 4" wide hockey stripe, straight across front and may contour as it transitions from Cab to Body on each side. Color: [#COL]. Location: [#LOC].	$4,009
8100-0174	Painted stripe - 12" wide hockey stripe, straight across front and may contour as it transitions from Cab to Body on each side. Color: [#COL]. Location: [#LOC].	$5,009
8100-0176	Paint E-ONE chassis cab - Sikkens paint. Color: [#COL].	$4,984
8100-0177	Paint cab Sikkens two-tone. Upper area of cab to be painted [#COL].	$1,122
8100-0182	Paint Body - Small - For Pumpers, Rear Mounts, S/A Tankers/Wetsides and Rescues. Sikkens paint. Color: [#COL].	$1,533
8100-0189	Cab paint two-tone DuPont 767681 EG Black (Upper) 7744 EG Lime Green (Lower). Freightliner.	$1,609
8100-0191	International cab paint. Paint color [#COL].	$152
8100-0192	Freightliner cab two tone. Upper paint color [#COL]	$1,911
8100-0193	International cab two tone. Upper paint color [#COL]	$743
8100-0228	FRP painted exterior panels IPO standard paint process for stainless steel bodies. Available only on stainless steel pumper bodies that have roll-up doors. Provides a credit versus the standard painting process. Sikkens paint. Color: [#COL].	-$3,304
8100-0230	Painted stripe - 10" wide hockey stripe, straight across front and may contour as it transitions from Cab to Body on each side. Color: [#COL]. Location: [#LOC].	$5,009
8100-0239	Cab paint two tone. Upper FLNA 4006 White / lower FLNA 3204 Red. International.	$629
8100-0240	Cab paint two tone. Upper FLNA 4006 White / lower FLNA 3225 Red. International.	$629
8100-0388	Chassis fuel tank to have undercoating applied prior to installation on frame.	$181
8100-0403	Black Durabak coating on fuel tank.	$369
8100-0410	Black Durabak coating on pump master drain bracket.	$42
8200-0000	Scotchlite Letter (Each) - 3". Color [#COL].	$7
8200-0001	Scotchlite Letter (Each) - 6". Color [#COL].	$9
8200-0003	Scotchlite Letter (Each) - 12". Color [#COL].	$10
8200-0005	Scotchlite Letter (Each) - 18". Color [#COL].	$14
8200-0006	Maltese cross 12" (Pair).	$1,006
8200-0007	Sign Gold Letter (Each) - 3"	$11
8200-0011	Scotchlite Letters (60) - 3". Color [#COL].	$678
8200-0012	Sign Gold Letters (60) - 3".	$986
8200-0013	Shade for lettering.	$3
8200-0018	Scotchlite Letters (90) - 3". Color [#COL].	$846
8200-0020	Sign Gold Letters (90) - 3".	$1,312
8200-0021	Sign Gold Letters (120) - 3".	$1,635
8200-0022	Shade and outline for lettering.	$4
8200-0027	Scotchlite Letter (Each) - 5". Color [#COL].	$9
8200-0028	Sign Gold Letter (Each) - 5"	$16
8200-0029	Scotchlite Letter (Each) - 10". Color [#COL].	$11
8200-0036	Scotchlite Letter (Each) - 4". Color [#COL].	$8
8200-0040	Gold leaf letters (90) - 3".	$3,276
8200-0045	Gold leaf letters (120) - 3".	$3,813
8200-0047	Sign Gold Letter (Each) - 4"	$13
8200-0048	Sign Gold Letters (120) - 4".	$2,012
8200-0049	3" Scotchlite Letters (60).	$918
8200-0061	Scotchlite Letter (Each) - 2". Color [#COL].	$5
8200-0073	Sign Gold Letter (Each) - 3". Sign Gold to be small turn style.	$14
8200-0081	Etched Vinyl Letter (Each) - 5"	$16
8200-0084	Scotchlite Letter (Each) - 1". Color [#COL].	$5
8200-0088	Gold leaf letter (Each) - 4".	$60
8200-0089	Gold leaf letters (EA) - 3".	$36
8300-0002	NFPA Scotchlite Stripe - 4" wide and straight on front/sides of cab and sides/rear of body. Color: [#COL]. Location: [#LOC].	$647
8300-0003	NFPA Scotchlite Stripe - 6" wide and straight on front/sides of cab and sides/rear of body. Color: [#COL]. Location: [#LOC].	$654
8300-0006	NFPA Scotchlite Stripe - 6" wide with "Z". Stripe straight on front, sides and rear of cab and body. "Z" location to be specified by customer. Color: [#COL]. Location: [#LOC].	$1,036
8300-0008	NFPA Scotchlite Stripe - 5" wide with "S". Stripe straight on front, sides and rear of cab and body. "S" location to be specified by customer. Color: [#COL]. Location: [#LOC].	$1,156

8300-0011	Scotchlite stripe (PR) 1/2" located 1/2" above and below existing stripe. Color: [#COL].	$482
8300-0012	Scotchlite stripes (4) 1/2" located (2) above and (2) below existing stripe. Stripes to be spaced 1/2" apart. Color: [#COL].	$958
8300-0013	NFPA Scotchlite Stripe - 2" and 4" wide with "Z". Stripe straight on front, sides and rear of cab and body. "Z" location to be specified by customer. 2" above 4" with 1" gap between stripes. Color: [#COL]. Location: [#LOC].	$1,463
8300-0016	Paint Break Sign Gold Chassis Stripe - 3/4" Wide - Black, Gold, Black. To be located above existing paint break.	$337
8300-0025	1/4" Pin stripe above and below existing Scotchlite stripe. Color: [#COL].	$773
8300-0026	Scotchlite stripe 1" located 1" above and below existing stripe. Color: [#COL].	$577
8300-0027	NFPA Scotchlite 4" wide hockey stripe, straight across front and may contour as it transitions from cab to body on each side. Color: [#COL]. Location: [#LOC].	$778
8300-0028	NFPA Scotchlite 6" wide hockey stripe, straight across front and may contour as it transitions from Cab to Body on each side. Color: [#COL]. Location: [#LOC].	$785
8300-0030	NFPA Scotchlite 10" wide hockey stripe, straight across front and may contour as it transitions from Cab to Body on each side. Color: [#COL]. Location: [#LOC].	$1,050
8300-0032	Chevron "A" style 4" Scotchlite striping on rear of body. Includes rear facing extrusions, panels and doors inboard/outboard of the beavertails(if applicable). Colors to be [#COL].	$3,060
8300-0033	NFPA Scotchlite Stripe - 8" wide and straight on front/sides of cab and sides/rear of body. Color: [#COL]. Location: [#LOC].	$809
8300-0039	Scotchlite stripe 1" located .5" above and below existing stripe. Color: [#COL].	$610
8300-0046	Scotchlite stripe (PR) 1/2" located directly above and below existing stripe. Color: [#COL].	$605
8300-0048	Paint break Scotchlite chassis stripe - 3/4" Wide - Black, [#COL], Black. To be located above existing paint break.	$589
8300-0059	NFPA Scotchlite Stripe - 10" wide and straight on front, sides and rear of cab and body. Color: [#COL]. Location: [#LOC].	$1,066
8300-0066	NFPA Scotchlite Stripe - 4" wide with "Z". Stripe straight on front, sides and rear of cab and body. "Z" location to be specified by customer. Color: [#COL]. Location: [#LOC].	$1,027
8300-0071	Paint break Scotchlite chassis stripe - 3/4" Wide - [#COL]. To be located above existing paint break.	$589
8300-0084	Chevron "A" style 6" printed sheet Scotchlite striping on rear of body. Includes rear facing extrusions, panels and doors inboard/outboard of the beavertails (if applicable). Colors to be [#COL].	$1,259
8300-0085	Scotchlite stripe 1" located directly above and below existing stripe. Color: [#COL].	$577
8300-0086	Scotchlite 6" wide cab hockey stripe. Hockey located on front cab doors up to top of cab. Color: White.	$470
8300-0088	NFPA Scotchlite Stripe - 4" wide and straight on sides and rear of body only. Color: [#COL]. Location: [#LOC].	$713
8300-0090	Scotchlite stripe 1.5" located directly above and below existing stripe. Color: [#COL].	$612
8300-0091	1/4" Scotchlite pinstripe above and below existing stripe. Color: [#COL].	$882
8300-0093	Chevron "A" style 6" printed sheet Scotchlite striping on front bumper. Colors to be [#COL].	$519
8300-0123	Chevron "A" style 6" printed pattern NFPA Scotchlite striping. Provided to driver and officer rear compartment face, smooth plate panels and/or doors outboard and above the center rear compartment opening and the vertical hosebed extrusions (terminate just above the upper handrail stanchion). The vertical and horizontal extrusions inboard of the vertical hosebed extrusions shall remain visible with a sanded finish. Colors to be [#COL].	$495
8300-0124	Chevron "A" style 6" printed pattern NFPA Scotchlite striping for rearend compartment door. Colors to be [#COL].	$452
8300-0127	4" White Scotchlite stripe. Locate low on cab and body.	$737
8300-0128	4" red Scotchlite stripe. Locate low on cab and body.	$737
8300-0143	NFPA Scotchlite Stripe - three stripes 3" wide with "Z" with 1" gap between stripes. Stripe straight on front, sides and rear of cab and body. "Z" location to be specified by customer. Color: top stripe - Yellow, middle stripe - White, bottom stripe - Black. Location: top of bottom stripe flush with top of bumper and straight back.	$3,012
8300-0155	NFPA Scotchlite Stripe - 4" wide with ribbon style "Z". Stripe straight on front, sides and rear of cab and body. "Z" location to be specified by customer. Color: [#COL]. Location: [#LOC].	$1,036
8300-0179	Chevron "A" style 6" printed sheet Scotchlite striping on rear of body. Includes rear facing extrusions, panels, inboard/outboard of the beavertails (if applicable). Does not include the rear door(s). Colors to be Yellow/Red.	$1,040
8300-0181	Paint Break Sign Gold Chassis Stripe - 3/4" Wide - Black, Gold, Black. Sign Gold to be small turn style. To be located above existing paint break.	$454

8300-0186	NFPA Scotchlite Stripe - 2" and 6" wide with "Z". Stripe straight on front, sides and rear of cab and body. "Z" location to be specified by customer. 2" above 6" with 1" gap between stripes. 6" stripe to have a .25" outline above and below. Color: [#COL]. Location: [#LOC].	$1,463
8300-0191	Paint break Scotchlite chassis stripe - 1/4" Wide - [#COL]. To be located above existing paint break.	$421
8300-0192	NFPA Scotchlite Stripe - 8" and 3" wide with "Z". Stripe straight on front, sides and rear of cab and body. "Z" location to be specified by customer. 8" above 3" with 1.5" gap between stripes. Color: White. Location: center of stripe centered with headlight bezel and straight back.	$1,923
8300-0194	Install dealer supplied Scotchlite pinstripe above and below existing stripe. Color: Blue.	$472
8300-0197	Scotchlite stripe 1" located 1" down from top of stripe and 1" up from bottom of stripe (1"stripes on existing stripe). Color: [#COL].	$610
8300-0198	NFPA Scotchlite Stripe - 8" wide with "Z". Stripe straight on front, sides and rear of cab and body. "Z" location to be specified by customer. Color: [#COL]. Location: [#LOC].	$1,923
8300-0209	NFPA Scotchlite Stripe - 10" wide with pin striping above and below. Pin striping thickness and spacing shall be as specified in shop order and straight on front, sides and rear of cab and body. Color: [#COL]. Location: [#LOC].	$1,347
8300-0214	Chevron "A" style 6" printed sheet Scotchlite striping stitched to vinyl hosebed cover end flap. Colors to be [#COL].	$389
8300-0216	Scotchlite 3" wide hockey stripe, straight across front and may contour as it transitions from cab to body on each side. Color: [#COL]. Location: [#LOC].	$778
8300-0217	NFPA Scotchlite Stripe - 1" and 6" wide with "Z". Stripe straight on front, sides and rear of cab and body. "Z" location to be specified by customer. 1" above 6" with 1" gap between stripes. 6" stripe to have a .25" outline above and below. Color: [#COL]. Location: [#LOC].	$1,463
8300-0220	Paint Break Sign Gold Chassis Stripe - 1" Wide - Black pin stripe, Sign Gold, Black pin stripe. To be located above existing paint break if so equipped or at the same approximate position (when there is not a paint break).	$605
8300-0222	NFPA Scotchlite Stripe - 1", 4" and 1" wide with "Z". Stripe straight on front, sides and rear of cab and body. "Z" location to be specified by customer. 1" above and below 4" with 1" gap between stripes. Color: [#COL]. Location: [#LOC].	$1,463
8300-0223	NFPA Scotchlite Stripe - 6" wide with double pin stripe top and bottom. "Z" Stripe straight on front, sides and rear of cab and body. "Z" location to be specified by customer. Stripe shall be a printed sheet laid out from top to bottom as 1/4" pin stripe, 1/8" gap (wide stripe color), 1/8" pin stripe, 6" wide stripe, 1/8" pin stripe, 1/8" gap (wide stripe color), 1/4" pin stripe. Color: [#COL]. Location: [#LOC].	$1,463
8300-0224	Paint break Scotchlite chassis stripe - 1/2" Wide - [#COL]. To be located above existing paint break.	$482
8300-0225	Paint break Scotchlite body stripe - 1/2" Wide - [#COL]. To be located above existing paint break.	$686
8300-0226	Sign Gold Stripe - 3/4" Wide aerial sign plate - Gold with red pin stripe outline. The striping shall create a border around sign plate lettering.	$1,020
8300-0230	Paint break painted on chassis stripe - 1/8" Wide - [#COL].To be located above existing paint break if so equipped or at the same approximate position (when there is not a paint break).	$1,026
8300-0232	NFPA Scotchlite Stripe - 2" and 4" wide with interlocking "Z". Stripe straight on front, sides and rear of cab and body. "Z" location to be specified by customer. 2" above 4" with 1" gap between stripes. Color: [#COL]. Location: [#LOC].	$1,463
8300-0233	NFPA Scotchlite Stripe - 1", 4" and 1" wide with triple interlocking "Z". Stripe straight on front, sides and rear of cab and body. "Z" location to be specified by customer. 2" above 4" with 1" gap between stripes. Color: [#COL]. Location: [#LOC].	$2,140
8300-0234	NFPA Scotchlite Stripe - 2" wide with "Heartbeat". Stripe straight on front, sides and rear of cab and body. "heartbeat" location to be specified by customer. Color: [#COL]. Location: [#LOC].	$1,027
8400-0010	Install customer logo from an existing E-ONE design (EA). Location: [#LOC]	$108
8400-0017	A customer logo supplied to E-One in a digital format. Location: [#LOC].	$268
8400-0021	Label "NO SMOKING" with universal symbol 2"x6"; white background with red letters. Location: [#LOC].	$34
8400-0023	Install customer supplied logo. Location: [#LOC].	$61
8400-0024	Install up to 12" SignGold customer logo from an existing E-ONE design (EA). Location: [#LOC].	$162
9000	**Delivery / Warranty / Service**	
9300-0009	Manuals, Operator and Service CD-ROM.	$301
9300-0010	Approval Drawings	$869
9300-0017	Manuals Printed (Set).	$787
9300-0018	Manuals, Operator and Service CD-ROM (additional set).	$44
9300-0035	Customer late change order.	$267
9300-0045	Manuals Printed (Set). Includes (1) service, (1) parts and (5) operation manuals.	$787

Notes:

1) Availability of options are limited by other options selected, and not all options are available in every chassis/apparatus configuration. Selection of an option may require several of the above parts/items to complete the option package.

2) Certain options, alone or in combination with other options, may require heavier axle/suspension packages, longer frames, or reinforced frames at additional cost per the above price list.

3) To configure options, the E-One State Term Schedule authorized dealer will use quote configuration software to select the components necessary to effect the option, feature, or configuration requested and quote the total option price.

Fire Apparatus Quotation for:
STATE OF OHIO TERM SCHEDULE

Quotation Number: 57485 Rev: 8

Unit Description: PMPR-TYPH

Quote Description: Pumper, Typhoon

Salescode	Extended Description	Qty
TESTING COMPLIANCE STANDARD		
1001-0015	The E-ONE supplied components of the vehicle shall meet the requirements of NFPA 1901, 2009 edition.	1
BUMPERS		
1160-0000	Bumper 10" stainless steel.	1
1160-0011	4" Front Bumper Extension.	1
FRAME ASSEMBLY		
1250-0003	Frame 10.25 x 3.5 x .375 chassis.	1
AXLE OPTIONS		
1025-0004	Meritor FL941 front axle 18,000 lb.	1
1025-0016	Meritor RS-24-160 single rear axle 24,000 lb. capacity.	1
1025-0029	Front shock absorbers.	1
SUSPENSIONS		
1070-0001	Rear suspension springs rated equal to the capacity of the axle.	1
WHEEL OPTIONS		
1050-0000	Steel wheels for front axle (2).	1
1050-0002	Steel wheels for rear axle (4).	1
1050-0007	Front axle wheel trim kit. Includes stainless steel lug nut covers (chrome plated plastic if applicable) and center cap with E-ONE logo. Note: Center cap will have an inspection port IPO a logo if equipped with Stemco oil seals.	1
1050-0008	Rear axle (single) wheel trim kit. Includes stainless steel lug nut covers (chrome plated plastic if applicable) and center cap with E-ONE logo. E-ONE custom chassis w/steel wheels will have chrome plated plastic lug covers.	1
TIRE OPTIONS		
1060-0001	Two Michelin 315 tires model XZA-1 for front axle.	1
1060-0015	Four Michelin 11R rear tires with XDN2 mud and snow tread.	1

1060-0050	Tire pressure monitoring valve stem caps.	1
BRAKE SYSTEMS		
1100-0000	16-1/2" x 6" S-cam brakes with ArvinMeritor automatic slack adjusters for front axle.	1
1100-0002	ArvinMeritor 16-1/2" x 7" S-cam brakes with cast brake drums for a single rear axle.	1
1100-0005	Brake system air 4X2/4X4.	1
1100-0006	Parking brake release mounted on the driver's side lower dash.	1
AIR SYSTEM OPTIONS		
1110-0000-001	Inlet for air system. Location: driver door jamb.	1
1110-0002	Air dryer Bendix AD-9.	1
1110-0006	Air lines nylon.	1
1110-0041	Air horns Grover recessed in bumper (PR).	1
ENGINES & TRANSMISSIONS		
1200-0017	Push-button transmission shift selector.	1
1200-0020	TransSynd synthetic transmission fluid for EVS3000.	1
1200-0097	Electronically limited speed to 68 MPH maximum. Note: Max speed may be set at 65 MPH due to tire rating.	1
1200-0234	Eng/Trans Cummins ISL 350HP/EVS3000 2013 EPA compliant engine.	1
SECONDARY BRAKING		
1125-0002	Jacobs engine compression brake.	1
COOLING PACKAGE		
1800-0013	Cooling system for use with Cyclone II X, Typhoon X, and Quest chassis. For use with 2010/2013 EPA engines. Includes coolant recovery system.	1
FUEL SYSTEMS		
1350-0003	Fuel system 50 gallon.	1
1350-0022	Fuel line hose rubber.	1
ALTERNATOR		
1700-0003	Alternator Leece Neville 270 amp SAE, 240 amp NFPA rating.	1
BATTERIES		
1400-0002	Battery four group 31 1000 CCA.	1
CHASSIS OPTIONS		
1680-0005	Thermatic fan clutch.	1
1680-0006	Drivelines 1710.	1
1680-0011	Tow eyes rear below body, painted.	1

1680-0042	Tow hooks front painted in the down position.	1
1680-0250-M58	Diesel Exhaust Fluid (DEF) 5 gallon tank for 2013 EPA engines. Location: left side below rear of cab.	1
CAB MODEL		
1520-0013	Typhoon X medium cab with 58" CA	1
CAB ROOF TYPE		
1615-0010	Cab roof to be "flat" (non-vista).	1
CAB BADGE PACKAGE		
1610-0000	Cab and body to have applicable E-ONE logos.	1
GRILLE		
1620-0004	ABS chrome plated grille.	1
CAB DOOR OPTIONS		
1550-0003	Rear crew cab doors in the medium position.	1
1550-0005	Driver and officer cab door windows. Include forward vent windows.	1
1550-0011	Rear crew cab door windows. Includes manual roll-down actuation. Not available with paddle style door latching.	1
1550-0016	Cab door panels ABS.	1
1550-0025	All cab doors shall have "L" style exterior latches.	1
1550-0027	Front cab door windows to manually roll down.	1
1550-0037-659	(4) Incandescent cab step area lighting. Locate each light in on each cab door in the inboard position. Lights to be switched with door ajar.	1
1550-0044	All cab door kick plates to be made from diamond plate aluminum.	1
1550-0059-000-72	Reflective Yellow/Red printed striping positioned in the "A" formation located in the	1
CAB DOOR OPTIONS		
	lower cab door panels.	
1550-0077	Interior cab door locks - manual. Will be individually actuated from each respective door. Includes barrel style key lock on each exterior cab door.	1
1550-0084	All cab exterior access doors to have 1250 keyed locks.	1
MIRRORS		
1670-0003	Velvac 2010 mirrors. Door mounted west coast style with remote control and heat.	1
MISC EXTERIOR CAB OPTIONS		
1550-0020	Windows cab side fixed driver's side.	1
1550-0033	Windows cab side fixed officer's side.	1
1675-0022	Pair of 18" handrails located just behind driver and officer front door one each side.	1
1675-0023	Pair of 18" handrails located just behind driver and officer rear door (ALS doors if equipped) one each side.	1

1675-0030	Mud flaps, front, black with E-ONE logo.	1
1675-0047	Rear cab wall to be 3/16" aluminum diamond plate.	1
HVAC		
1515-0017	Air conditioning for the Typhoon X, CII X and Quest with Cummins ISC/ISL engine, radiator mounted condenser.	1
1685-0057	Heaters rear with covers (PR), and front heater with heat to the feet for the driver and officer.	1
SEATS		
1510-0003	Seats, Inc. brand 911 cab seats.	1
1510-0007	Seat cover material vinyl.	1
1510-0008	Seat color gray.	1
1510-0035-147	Universal air pack bottle bracket (EA). Location: officer's seat.	1
1510-0035-148	Universal air pack bottle bracket (EA). Location: rear facing driver's side.	1
1510-0035-215	Universal air pack bottle bracket (EA). Location: rear facing officer's side.	1
1510-0038	Driver seat 911 air ride.	1
1510-0042	Officer seat to be 911 fixed SCBA.	1
1510-0050	Rear facing 911 seat with SCBA driver's side.	1
1510-0053	Rear facing 911 seat with SCBA officer's side.	1
1685-0031	Seating capacity tag of four occupants.	1
MISC INTERIOR CAB OPTIONS		
1685-0000	Cab interior gray. Does not include engine cover or seat color.	1
1685-0005	Lexan sun visors, driver and officer's side overhead.	1
1685-0168	ABS Dash package. Includes center and officer side dash, lower kick panels and "A" post covers.	1
1685-0187	Severe duty engine cover, molded polyurethane.	1
CAB ELECTRICAL OPTIONS		
1750-0013-172	Turn signal Whelen 600 LED amber arrow pair located upper headlight bezel.	1
1750-0029	Switch horn button two position DOT/air horn.	1
1750-0046-195	Cab Headlights. Position: lower.	1
1750-0059-179-04	Receptacle inlet 20 amp with a Yellow cover. Location: outside driver's door next to handrail.	1
1750-0072-593	12 VDC (or 24VDC) electrical outlet in the cab wired battery hot. Location: officer side dash.	2
1750-0075	English dominant main cab gauge cluster.	1
1750-0188	DPF regeneration override switch.	1
1750-0198-A31	Battery charger to be located behind driver's seat.	1
1750-0343	Battery charger E-ONE LPC 20. 120 volt inlet, 20 amp output.	1

5400-0037	Dome Lts Red/White Incandescent. Package includes two lights mounted in the front and two mounted in the rear of the cab. White light wire through door and light assembly mounted switch. Red light through light assembly mounted switch.	1
BODY COMPT LEFT SIDE		
3100-0095	Driver side body with full height 36" wide forward and 36" wide rearward compartmentation. Includes (1) 56" wide compartment over the wheel well.	1
BODY COMPT RIGHT SIDE		
3120-0004	Officer half side body with 36" wide forward and 36" wide rearward compartmentation. Includes adjustable ladder tracks.	1
BODY COMPT REAR		
3110-0005	Full Height Rear Compartment. Includes smooth plate panels.	1
3110-0034	Upper rear compartment depth to be shallow.	1
3340-0115	Bolt-on diamond plate 16" tailboard (full width of body). Includes (2) squared off beavertails (no stanchions) with removable outer panels and handrails- (2) vertically on trailing edge of body and horizontally mounted handrail(s) below hosebed.	1
DOORS		
3300-0017-004	Door roll up short (up to 45") with satin finish ROM. Location(s): L2.	1
3300-0017-015	Door roll up short (up to 45") with satin finish ROM. Location(s): R1.	1
3300-0017-016	Door roll up short (up to 45") with satin finish ROM. Location(s): R2.	1
3300-0019-003	Door roll up tall (greater than 45") with satin finish ROM. Location(s): L1.	1
3300-0019-005	Door roll up tall (greater than 45") with satin finish ROM. Location(s): L3.	1
3300-0019-027	Door roll up tall (greater than 45") with satin finish ROM. Location(s): B1.	1
SHELVES		
3370-0025-099	Permanent shelf. Locate in L1 at offset (above extrusion if applicable).	1
3370-0025-100	Permanent shelf. Locate in L3 at offset (above extrusion if applicable).	1
COVERS		
3305-0007-000-02	Vinyl Red hose bed cover with attached rear flap(s).	1
3305-0008-000-02	Vinyl Red crosslay cover with attached side flaps.	1
PUMP MODULE		
3130-0003	Pump module. Includes 39" wide pump panel opening and running boards.	1
3130-0013	Upper SM pump module with single stacked double crosslays and diamond plate storage pan.	1
3130-0167	Pump module to be 76" wide (side to side). Includes upper, lower, crosswalk, speedlay and tranverse module(s) if applicable.	1
PUMP PANELS		
3134-0011	Officer side pump panel to be vertically hinged on forward extrusion. Panel(s) to be secured in the closed position with push button latches. Upper panel to be held open	1

	with gas shock.	
3134-0016	Stainless steel driver and officer side pump panels.	1
3134-0064	The gauge panel(s) on the driver side of the Side Mount module to be hinged upward. Panel(s) to include (2) mechanical/pneumatic (as applicable to panel size) hold opens and latches.	1
MISC PUMP PANEL OPTIONS		
4460-0003	Pump panel tags color coded per NFPA compliance.	1
PUMP MODULE OPTIONS		
3136-0048	Notched crosslay divider(s) on both ends for preconnect line(s) nozzle end storage with NFPA cover(s) in closed position.	1
3136-0058	E-ONE logo mounted one each side on pump module/preconnect panels. Logos to be sized as applicable to available space on panels.	1
WATER TANK		
4010-0174	530 Gallon "T" Water Tank. UPF Poly III color fill towers. Note: Any foam cell(s) will reduce the overall water capacity.	1
TANK PLUMBING		
4450-0010	2" tank fill Akron manual valve.	1
4450-0119	3" tank to pump Akron manual valve w/4" plumbing.	1
LADDER STORAGE / RACKS		
3365-0018	Hold down brackets to secure a 2-section extension and roof ladder.	1
3365-0025-515	Attic ladder mounting brackets (PR). Locate officer side compartment top.	1
3365-0028	Hard Suction Storage Rack. Driver side compartment top. Includes spring hold downs and scuff plates behind spring mounts (as applicable).	1
3365-0031	Hard Suction Storage Rack. Officer side in adjustable track above ladders (if applicable). Includes spring hold downs and scuff plates.	1
3365-0034-515	(2) aluminum pike pole storage tubes. Locate officer side compartment top.	1
3365-0049	Brand of ladders capable of being carried on unit to be Alco-Lite.	1
3365-0086-B99	The pike pole(s) capable of being stored are to be the following length: (2) 10' pike poles.	1
3365-0087-C57	The length of ladders capable of being stored shall be the following: 24' 2-section and 14' roof ladder.	1
3365-0168	Pike pole tube secondary retaining pin(s) with cable. Locate on end of pike pole tube(s).	1
HANDRAILS / STEPS		
3330-0103	Dual lighted LED folding steps rear NFPA. Includes folding steps on driver side (staggered stepped as applicable with tailboard depth) for NFPA hosebed access and handrail mounted on driver side upper hosebed side (as applicable).	1
3330-0105-060	Dual lighted LED folding step. Location: officer side front compartment face. Each location requires a minimum of (1) handrail per NFPA.	1
3330-0105-062	Dual lighted LED folding step. Location: driver side front compartment face. Each	3

	location requires a minimum of (1) handrail per NFPA.	
MISC BODY OPTIONS		
3090-0002	The unit has no overall height restrictions.	1
3090-0004	The unit has no overall length restrictions.	1
3090-0007	The hose bed is to have NFPA capacity.	1
3340-0004	Hosebed above the booster tank. Includes forward hosebed and tower(s) cover plate work (as applicable). Hosebed adjustable divider extrusion rearward of the furthest tower is to run full width of the hosebed (as is practical with other hosebed mounted equipment).	1
3340-0015	Diamond plate single axle wheel well. Includes bolt-on composite wheel well liners and aluminum trim fenderettes.	1
3340-0035	Divider Long. To run full length of hose bed (front to rear).	1
3340-0049	Hosebed storage pan. Locate in forward area of hosebed.	1
3340-0058	Recessed fuel fill driver side wheel well.	1
3340-0074	Body mainframe and hosebed side assemblies for a 85" high body.	1
3340-0079	Locate Tank Fill Tower(s) in the hose bed storage pan.	1
3340-0093	Mud flaps, rear, black with E-ONE logo.	1
3340-0110	The rear of each hose bed divider to have a hand hold cut-out(s).	1
3340-0128	Bolt-in partition walls. Locate in lower rear compartment transverse area. Partitions to separate the side rear compartments from the rear compartment.	1
3340-0145	Rubrail for the body and pump area module(s).	1
SCBA BOTTLE STORAGE		
3320-0020	SCBA Bottle Storage. (4) Fire Shopp SCBA bottle storage with hinged doors with push button latches. (2) officer side and (2) driver side in wheel well area.	1
PUMPS		
4005-0016	Hale QMAX 1000-2250 GPM single stage pump.	1
4005-0031	Rating 1500 GPM.	1
PUMP CERTIFICATION		
4475-0000	Pump certification 750-2250 GPM	1
PUMP OPTIONS		
4015-0007	Pump cooler, 1/4" valve with 3/8" tubing.	1
4015-0008	Zinc anodes for Hale pump (PR), (1) discharge side and (1) intake side.	1
4015-0022	Mechanical pump seal - Hale.	1
4015-0052-198	Steamers to be Flush. Location: driver's side.	1
PUMP OPTIONS		
4015-0052-199	Steamers to be Flush. Location: officer's side.	1
4015-0098	Manually operated master pump drain. The master drain shall be clearly marked and	1

	placed in accessible location on pump panel.	
INTAKES		
4440-0005	2.5" Left Intake Akron Manual Valve.	1
INTAKE OPTIONS		
4445-0016	Intake relief valve, Hale 2.5".	1
DISCHARGES AND PRECONNECTS		
4415-0012-654	1.5" crosslay with Akron manual valve. Location: crosslay 1 & 2.	2
4415-0022-350	2.5" Left Rear Discharge Akron Manual Valve. Location: left rear discharge.	1
4415-0034-583	3" Right Pump Panel Discharge Akron Manual Valve (Waterous pumps noted location to be forward lower port). Location: right side discharge 1.	1
4415-0041	3" Deck Gun Discharge, Akron manual valve.	1
4415-0161-581	2.5" Left Panel Discharge Akron Manual Valve w/30 Degree Droop. Location: left side discharge 1.	1
4415-0161-582	2.5" Left Panel Discharge Akron Manual Valve w/30 Degree Droop. Location: left side discharge 2.	1
4415-0164-584	2.5" Right Panel Discharge Akron Manual Valve w/30 Degree Droop. Location: right side discharge 2.	1
4417-0106-L65	Deck gun piping to be positioned centered in deck gun channel.	1
DISCHARGE OPTIONS		
4417-0070	Push-Pull "T" handle controls.	1
4417-0089-350	Lift lever quarter turn bleeder valve. Plumbed for use with: left rear discharge.	1
4417-0089-356	Lift lever quarter turn bleeder valve. Plumbed for use with: deck gun.	1
4417-0089-573	Lift lever quarter turn bleeder valve. Plumbed for use with: crosslay preconnect.	2
4417-0089-575	Lift lever quarter turn bleeder valve. Plumbed for use with: left discharge.	2
4417-0089-576	Lift lever quarter turn bleeder valve. Plumbed for use with: right discharge.	2
PRESSURE GOVERNORS		
4465-0011	Class 1 TPG pressure governor. Includes, water, oil, volt and tachometer.	1
GAUGES		
4435-0001	Class 1 Intelli-Tank water tank level gauge.	1
4435-0013	4.5" Class 1 compound pressure gauge (30-0-600 PSI).	2
4435-0015-350	2.5" Class 1 compound pressure gauge (30-0-600). Discharge(s): left rear discharge.	1
4435-0015-352	2.5" Class 1 compound pressure gauge (30-0-600). Discharge(s): 1.5 in. crosslay preconnect.	2
4435-0015-356	2.5" Class 1 compound pressure gauge (30-0-600). Discharge(s): deck gun.	1
4435-0015-581	2.5" Class 1 compound pressure gauge (30-0-600). Discharge(s): left side discharge 1.	1
4435-0015-582	2.5" Class 1 compound pressure gauge (30-0-600). Discharge(s): left side discharge	1

	2.	
4435-0015-583	2.5" Class 1 compound pressure gauge (30-0-600). Discharge(s): right side discharge 1.	1
4435-0015-584	2.5" Class 1 compound pressure gauge (30-0-600). Discharge(s): right side discharge 2.	1
ELECTRICAL SYSTEMS		
5010-0013-E91	Vehicle data recorder - 2009 NFPA compliant. Includes occupant detection with display. Display location: Driver side of center dash electrical cover.	1
5010-0036	V-MUX Electrical system for pumper / tanker / rescue.	1
5010-0059-339	VFD Text display for V-MUX electrical system. Location: center of dash.	1
LIGHT BARS		
5300-0055	Light bar Whelen Freedom model FN72QLED 72" LED with MKEZ7 mounts and clear lenses. Location: Centered on the front cab roof.	1
WARNING LIGHT PACKAGES		
5550-0059-535	Whelen Super LED lower level warning light package. Includes (8) red 600 LED light heads and (2) red 500 LED light heads w/chrome flanges. Locate side facing lights: at forward most position, centered in rear wheel well, and side facing at rear of body in rubrail if equipped.	1
WARNING LIGHTS		
5600-0078-479-06	Whelen Super LED beacon (PR) model L31H with Red domes. Location rear upper body on aerial style brackets.	1
5600-0149-170	Hazard (door ajar) light, 2.5" incandescent. Location: center overhead.	1
SIRENS		
5500-0015	Whelen model 295SLSA1 siren with microphone (replaced 295HFSA1).	1
5500-0024-170	The electronic siren control is to be located on the center overhead.	1
SPEAKERS		
5510-0018-209	Whelen SA122FMP electronic siren speaker recessed in front bumper. Location: driver side front bumper.	1
DOT LIGHTING		
5150-0007	Whelen 600 series LED vertical mount tail lights. Includes LED stop/tail, arrow turn and halogen back-up lights with vertical Cast 3 housing and weatherproof connectors.	1
5150-0017	License plate light LED with chrome housing located at the rear of the body.	1
5150-0025	Marker light LED body/cab package. E-One custom cab and pumper or tanker body only.	1
LIGHTS - COMPARTMENT, STEP & GROUND		
5380-0008	Compartment light package incandescent for small bodies.	1
5380-0027	Ground light package for cab and body - small.	1

LIGHTS - DECK AND SCENE		
5390-0000-395	Deck light - Unity 12 volt (PR). Location: rear body/beavertail area on the trailing edge up high.	1
5390-0003	Hose bed light Truck-Lite. Locate at the front area of the hose bed. Switched with work light switch in cab.	1
5390-0022	Crosslay light Truck-Lite. Locate to rear of crosslay (SM) and forward of crosslay (TM as applicable). Switched with work light switch in cab.	1
LIGHTS - NON-WARNING		
5400-0003	Engine compartment light (EA).	1
5400-0008	(1) pump panel light over the pump control area to be wired to come on when pump shift is placed in pump. (Side mount forward light noted, Top Mount is center light.)	1
5400-0010	Incandescent pump compartment light (EA).	1
5400-0039	Spotlight Specialty 2150 hand held located on officer's side of cab dash - hardwired.	1
5400-0047	Pump panel light package with (3) lights per side pump panel. Pump panels over 45" may require additional lights. Side mount only.	1
CONTROLS / SWITCHES		
5100-0000-199	Foot switch to control air horns located officer's side.	1
5100-0007-198	Foot switch to control electronic siren located driver's side.	1
MISC ELECTRICAL		
1750-0082-762	12V power distribution module. Includes (6) battery hot and (6) switched hot circuits. 100 amps max (IATS). Location: behind officer's seat.	1
5110-0017	Back-up alarm 97 dB.	1
HAND TOOLS		
7600-0005	Pike Pole Fiberglass 6'.	1
7600-0007	Pike Pole Fiberglass 10'.	1
HOSE / NOZZLES		
7700-0004	Hard suction hose 6" with Pyrolite couplings.	2
GROUND LADDERS		
7800-0007	Alco-Lite PRL-14' roof ladder.	1
7800-0016	Alco-Lite PEL-24' 2-section extension ladder.	1
7800-0032	Alco-Lite FL-10, 10' folding ladder w/safety shoes.	1
MISC LOOSE EQUIPMENT		
7900-0010	Chrome Barrel Strainer 6" NST.	1
7900-0014	DOT Required Drive Away Kit - Kit includes three (3) triangular warning reflectors with carrying case. This kit is for the end user and is to remain with the truck.	1

EXTERIOR PAINT			
8100-0089	All applicable pump/pre-connect application modules are to have a sanded finish (not painted job color). Includes upper and lower pump modules, crosswalk module and/or speedlay/pre-connect module (as applicable). Rear mounted body/pump module to be painted job color.	1	
8100-0116	Rear body surface to have a sanded finish (not painted job color). Includes hinged doors that do not have discrete sales codes and removable panels.	1	
8100-0176-000-17	Paint E-ONE chassis cab - Sikkens paint. Color: FLNA3225E-1 Red.	1	
8100-0182-000-17	Paint Body - Small - For Pumpers, Rear Mounts, S/A Tankers/Wetsides and Rescues. Sikkens paint. Color: FLNA3225E-1 Red.	1	
8100-0186-000-39	Paint exterior surface of outer steel wheels. Sikkens paint. Color: Job Color.	1	
INTERIOR PAINT			
8150-0011	The interior of the cab to be painted Zolatone gray.	1	
STRIPING			
8300-0002-334-12	NFPA Scotchlite Stripe - 4" wide and straight on front/sides of cab and sides/rear of body. Color: White. Location: bottom of stripe flush with top of bumper and straight back.	1	
8300-0042	White rubrail scotchlite insert.	1	
8300-0084-000-72	Chevron "A" style 6" printed sheet Scotchlite striping on rear of body. Includes rear facing extrusions, panels and doors inboard/outboard of the beavertails (if applicable). Colors to be Yellow/Red.	1	
WARRANTY / STANDARD & EXTENDED			
9100-0000	Standard 1 Year Warranty.	1	
9100-0003	Lifetime Frame Warranty.	1	
9100-0004	10 Year/100,000 Mile Structural Warranty - Statement of Warranty.	1	
9100-0005	10 Year Stainless Steel Plumbing Warranty - Statement of Warranty.	1	
9100-0019	10 Year Limited Paint and Perforation Warranty - For Sikkens Paint.	1	
SUPPORT, DELIVERY, INSPECTIONS AND MANUALS			
9300-0009	Manuals, Operator and Service CD-ROM.	1	
9300-0016	Approval Drawings-Standard.	1	
PRICE	2013 E-ONE MAINLINE PUMPER - TYPHOON CUSTOM CHASSIS		$307,887.

STATE OF OHIO TERM SCHEDULE

4200 SURFACE RD
COLUMBUS, OH 43228

Quote No: 57485

3/11/2013

Quote Rev:8 Drawing Rev:4

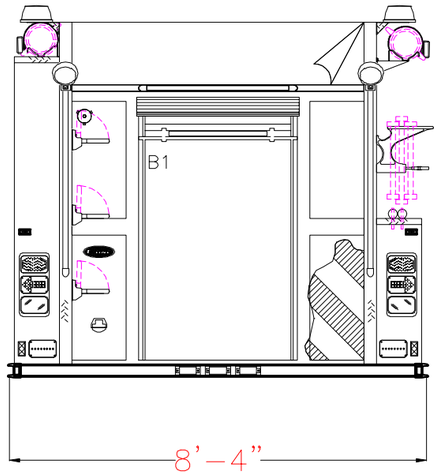

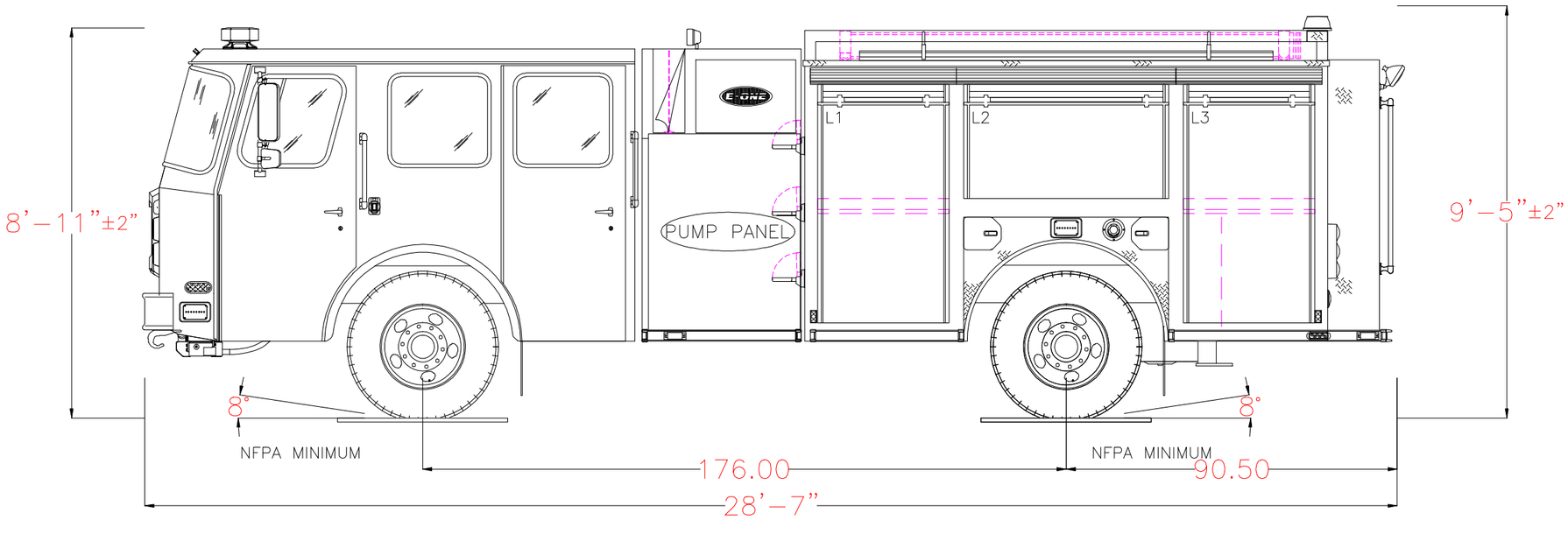

POWERED BY EZDRAW

Notice: This drawing provides a GENERAL REPRESENTATION of the vehicle configuration and should be used for evaluation purposes. The respective dimensions shown,including overall height and length, are estimates and may vary due to manufacturing processes. All other items such as lighting and fixtures, plumbing, compartmentation, and other generally assembled details are shown for REFERENCE ONLY and may not be a direct reflection of the final truck configuration. In ALL situations where this drawing may conflict with the specifications, THE SPECIFICATIONS, AS REFLECTED IN THE APPROVED SHOP ORDER, SHALL PREVAIL. Unless otherwise specified, the proposed apparatus will be manufactured to the latest NFPA recommendations as well as other applicable federally regulated safety regulations. E-One reserves the right to engineer and incorporate design improvements and changes without notice, while adhering to the intent of the specification.

1500 GPM HALE QMAXPUMP 0 TOTAL VOLUME 0 TOTAL FOAM	HOSE LOADS :

	OPENING		INTERIOR DIMENSIONS				
COMPT.	WIDTH	HEIGHT	WIDTH	LOWER HEIGHT	LOWER DEPTH	UPPER HEIGHT	UPPER DEPTH
L1	34	59.75	36	30	26	26.75	12
L2	54	25.75	56	N/A	N/A	26.75	12
L3	34	59.75	36	30	26	26.75	12
R1	34	21	36	30	26	N/A	N/A
R2	34	21	36	30	26	N/A	N/A
B1	36	45	38	30	26	24	14

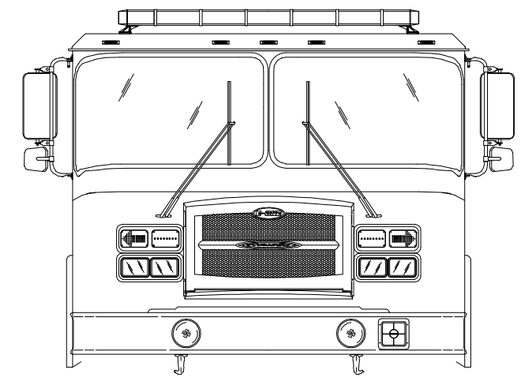

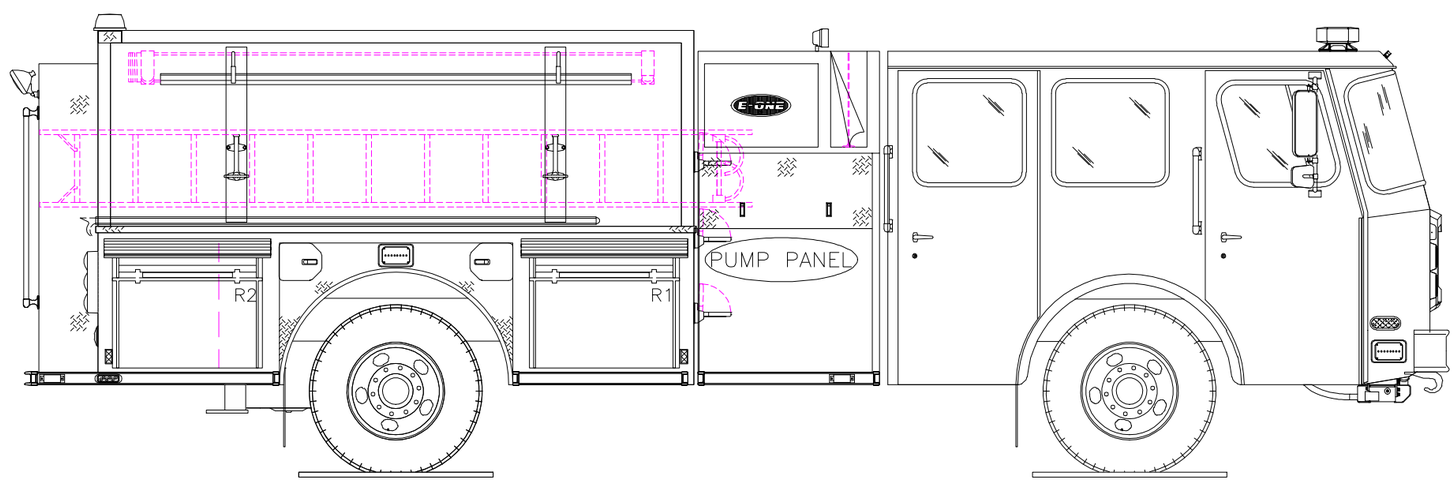

POWERED BY EZDRAW

Fire Apparatus Quotation for:
STATE OF OHIO TERM SCHEDULE

Quotation Number: 57486 Rev: 7

Unit Description: PMPR-CYC2

Quote Description: Pumper, Cyclone II

Salescode	Extended Description	Qty
TESTING COMPLIANCE STANDARD		
1001-0015	The E-ONE supplied components of the vehicle shall meet the requirements of NFPA 1901, 2009 edition.	1
BUMPERS		
1160-0000	Bumper 10" stainless steel.	1
1160-0011	4" Front Bumper Extension.	1
FRAME ASSEMBLY		
1250-0003	Frame 10.25 x 3.5 x .375 chassis.	1
AXLE OPTIONS		
1025-0009	Meritor FL943 front axle 18,000 lbs.	1
1025-0016	Meritor RS-24-160 single rear axle 24,000 lb. capacity.	1
1025-0029	Front shock absorbers.	1
SUSPENSIONS		
1070-0001	Rear suspension springs rated equal to the capacity of the axle.	1
WHEEL OPTIONS		
1050-0000	Steel wheels for front axle (2).	1
1050-0002	Steel wheels for rear axle (4).	1
1050-0007	Front axle wheel trim kit. Includes stainless steel lug nut covers (chrome plated plastic if applicable) and center cap with E-ONE logo. Note: Center cap will have an inspection port IPO a logo if equipped with Stemco oil seals.	1
1050-0008	Rear axle (single) wheel trim kit. Includes stainless steel lug nut covers (chrome plated plastic if applicable) and center cap with E-ONE logo. E-ONE custom chassis w/steel wheels will have chrome plated plastic lug covers.	1
TIRE OPTIONS		
1060-0001	Two Michelin 315 tires model XZA-1 for front axle.	1
1060-0015	Four Michelin 11R rear tires with XDN2 mud and snow tread.	1

1060-0050	Tire pressure monitoring valve stem caps.	1
BRAKE SYSTEMS		
1100-0000	16-1/2" x 6" S-cam brakes with ArvinMeritor automatic slack adjusters for front axle.	1
1100-0002	ArvinMeritor 16-1/2" x 7" S-cam brakes with cast brake drums for a single rear axle.	1
1100-0005	Brake system air 4X2/4X4.	1
1100-0006	Parking brake release mounted on the driver's side lower dash.	1
AIR SYSTEM OPTIONS		
1110-0000-001	Inlet for air system. Location: driver door jamb.	1
1110-0002	Air dryer Bendix AD-9.	1
1110-0006	Air lines nylon.	1
1110-0041	Air horns Grover recessed in bumper (PR).	1
ENGINES & TRANSMISSIONS		
1200-0017	Push-button transmission shift selector.	1
1200-0021	TransSynd synthetic transmission fluid for EVS 4000.	1
1200-0097	Electronically limited speed to 68 MPH maximum. Note: Max speed may be set at 65 MPH due to tire rating.	1
1200-0238	Eng/Trans Cummins ISX12 450HP with EVS4000 transmission. 2013 EPA Compliant.	1
SECONDARY BRAKING		
1125-0002	Jacobs engine compression brake.	1
COOLING PACKAGE		
1800-0013	Cooling system for use with Cyclone II X, Typhoon X, and Quest chassis. For use with 2010/2013 EPA engines. Includes coolant recovery system.	1
FUEL SYSTEMS		
1350-0003	Fuel system 50 gallon.	1
1350-0022	Fuel line hose rubber.	1
ALTERNATOR		
1700-0003	Alternator Leece Neville 270 amp SAE, 240 amp NFPA rating.	1
BATTERIES		
1400-0002	Battery four group 31 1000 CCA.	1
CHASSIS OPTIONS		
1680-0005	Thermatic fan clutch.	1
1680-0007	Drivelines 1810. Required on 1550 lb/ft torque engines.	1
1680-0011	Tow eyes rear below body, painted.	1

1680-0042	Tow hooks front painted in the down position.	1
1680-0250-M58	Diesel Exhaust Fluid (DEF) 5 gallon tank for 2013 EPA engines. Location: left side below rear of cab.	1
CAB MODEL		
1520-0008	Cyclone II X medium cab with 58" CA	1
CAB ROOF TYPE		
1615-0010	Cab roof to be "flat" (non-vista).	1
CAB BADGE PACKAGE		
1610-0000	Cab and body to have applicable E-ONE logos.	1
CAB DOOR OPTIONS		
1550-0003	Rear crew cab doors in the medium position.	1
1550-0005	Driver and officer cab door windows. Include forward vent windows.	1
1550-0011	Rear crew cab door windows. Includes manual roll-down actuation. Not available with paddle style door latching.	1
1550-0016	Cab door panels ABS.	1
1550-0025	All cab doors shall have "L" style exterior latches.	1
1550-0027	Front cab door windows to manually roll down.	1
1550-0037-659	(4) Incandescent cab step area lighting. Locate each light in on each cab door in the inboard position. Lights to be switched with door ajar.	1
1550-0044	All cab door kick plates to be made from diamond plate aluminum.	1
1550-0059-000-72	Reflective Yellow/Red printed striping positioned in the "A" formation located in the lower cab door panels.	1
1550-0077	Interior cab door locks - manual. Will be individually actuated from each respective door. Includes barrel style key lock on each exterior cab door.	1
1550-0084	All cab exterior access doors to have 1250 keyed locks.	1
MIRRORS		
1670-0003	Velvac 2010 mirrors. Door mounted west coast style with remote control and heat.	1
MISC EXTERIOR CAB OPTIONS		
1550-0020	Windows cab side fixed driver's side.	1
1550-0033	Windows cab side fixed officer's side.	1
1675-0022	Pair of 18" handrails located just behind driver and officer front door one each side.	1
1675-0023	Pair of 18" handrails located just behind driver and officer rear door (ALS doors if equipped) one each side.	1
1675-0030	Mud flaps, front, black with E-ONE logo.	1
1675-0047	Rear cab wall to be 3/16" aluminum diamond plate.	1
HVAC		
1515-0018	Air conditioning for the CII X and Quest with Cummins ISM, ISX or Detroit Diesel	1

	Series 60 engine, roof top mounted condenser.	
1685-0057	Heaters rear with covers (PR), and front heater with heat to the feet for the driver and officer.	1
SEATS		
1510-0003	Seats, Inc. brand 911 cab seats.	1
1510-0007	Seat cover material vinyl.	1
1510-0008	Seat color gray.	1
1510-0035-147	Universal air pack bottle bracket (EA). Location: officer's seat.	1
1510-0035-148	Universal air pack bottle bracket (EA). Location: rear facing driver's side.	1
1510-0035-215	Universal air pack bottle bracket (EA). Location: rear facing officer's side.	1
1510-0038	Driver seat 911 air ride.	1
1510-0042	Officer seat to be 911 fixed SCBA.	1
1510-0050	Rear facing 911 seat with SCBA driver's side.	1
1510-0053	Rear facing 911 seat with SCBA officer's side.	1
1685-0031	Seating capacity tag of four occupants.	1
MISC INTERIOR CAB OPTIONS		
1685-0000	Cab interior gray. Does not include engine cover or seat color.	1
1685-0005	Lexan sun visors, driver and officer's side overhead.	1
1685-0168	ABS Dash package. Includes center and officer side dash, lower kick panels and "A" post covers.	1
1685-0187	Severe duty engine cover, molded polyurethane.	1
CAB ELECTRICAL OPTIONS		
1750-0013-172	Turn signal Whelen 600 LED amber arrow pair located upper headlight bezel.	1
1750-0029	Switch horn button two position DOT/air horn.	1
1750-0046-195	Cab Headlights. Position: lower.	1
1750-0059-179-04	Receptacle inlet 20 amp with a Yellow cover. Location: outside driver's door next to handrail.	1
1750-0072-593	12 VDC (or 24VDC) electrical outlet in the cab wired battery hot. Location: officer side dash.	2
1750-0075	English dominant main cab gauge cluster.	1
1750-0188	DPF regeneration override switch.	1
1750-0198-A31	Battery charger to be located behind driver's seat.	1
1750-0343	Battery charger E-ONE LPC 20. 120 volt inlet, 20 amp output.	1
5400-0037	Dome Lts Red/White Incandescent. Package includes two lights mounted in the front and two mounted in the rear of the cab. White light wire through door and light assembly mounted switch. Red light through light assembly mounted switch.	1
BODY COMPT LEFT SIDE		
3100-0095	Driver side body with full height 36" wide forward and 36" wide rearward	1

	compartmentation. Includes (1) 56" wide compartment over the wheel well.	
BODY COMPT RIGHT SIDE		
3120-0004	Officer half side body with 36" wide forward and 36" wide rearward compartmentation. Includes adjustable ladder tracks.	1
BODY COMPT REAR		
3110-0005	Full Height Rear Compartment. Includes smooth plate panels.	1
3110-0034	Upper rear compartment depth to be shallow.	1
3340-0115	Bolt-on diamond plate 16" tailboard (full width of body). Includes (2) squared off beavertails (no stanchions) with removable outer panels and handrails- (2) vertically on trailing edge of body and horizontally mounted handrail(s) below hosebed.	1
DOORS		
3300-0017-004	Door roll up short (up to 45") with satin finish ROM. Location(s): L2.	1
3300-0017-015	Door roll up short (up to 45") with satin finish ROM. Location(s): R1.	1
3300-0017-016	Door roll up short (up to 45") with satin finish ROM. Location(s): R2.	1
3300-0019-003	Door roll up tall (greater than 45") with satin finish ROM. Location(s): L1.	1
3300-0019-005	Door roll up tall (greater than 45") with satin finish ROM. Location(s): L3.	1
3300-0019-027	Door roll up tall (greater than 45") with satin finish ROM. Location(s): B1.	1
SHELVES		
3370-0025-099	Permanent shelf. Locate in L1 at offset (above extrusion if applicable).	1
3370-0025-100	Permanent shelf. Locate in L3 at offset (above extrusion if applicable).	1
COVERS		
3305-0007-000-02	Vinyl Red hose bed cover with attached rear flap(s).	1
3305-0008-000-02	Vinyl Red crosslay cover with attached side flaps.	1
PUMP MODULE		
3130-0003	Pump module. Includes 39" wide pump panel opening and running boards.	1
3130-0013	Upper SM pump module with single stacked double crosslays and diamond plate storage pan.	1
3130-0167	Pump module to be 76" wide (side to side). Includes upper, lower, crosswalk, speedlay and tranverse module(s) if applicable.	1
PUMP PANELS		
3134-0011	Officer side pump panel to be vertically hinged on forward extrusion. Panel(s) to be secured in the closed position with push button latches. Upper panel to be held open with gas shock.	1
3134-0016	Stainless steel driver and officer side pump panels.	1
3134-0064	The gauge panel(s) on the driver side of the Side Mount module to be hinged upward. Panel(s) to include (2) mechanical/pneumatic (as applicable to panel size) hold opens and latches.	1

MISC PUMP PANEL OPTIONS		
4460-0003	Pump panel tags color coded per NFPA compliance.	1
PUMP MODULE OPTIONS		
3136-0048	Notched crosslay divider(s) on both ends for preconnect line(s) nozzle end storage with NFPA cover(s) in closed position.	1
3136-0058	E-ONE logo mounted one each side on pump module/preconnect panels. Logos to be sized as applicable to available space on panels.	1
WATER TANK		
4010-0174	530 Gallon "T" Water Tank. UPF Poly III color fill towers. Note: Any foam cell(s) will reduce the overall water capacity.	1
TANK PLUMBING		
4450-0010	2" tank fill Akron manual valve.	1
4450-0119	3" tank to pump Akron manual valve w/4" plumbing.	1
LADDER STORAGE / RACKS		
3365-0018	Hold down brackets to secure a 2-section extension and roof ladder.	1
3365-0025-515	Attic ladder mounting brackets (PR). Locate officer side compartment top.	1
3365-0028	Hard Suction Storage Rack. Driver side compartment top. Includes spring hold downs and scuff plates behind spring mounts (as applicable).	1
3365-0031	Hard Suction Storage Rack. Officer side in adjustable track above ladders (if applicable). Includes spring hold downs and scuff plates.	1
3365-0034-515	(2) aluminum pike pole storage tubes. Locate officer side compartment top.	1
3365-0049	Brand of ladders capable of being carried on unit to be Alco-Lite.	1
3365-0086-B99	The pike pole(s) capable of being stored are to be the following length: (2) 10' pike poles.	1
3365-0087-C57	The length of ladders capable of being stored shall be the following: 24' 2-section and 14' roof ladder.	1
3365-0168	Pike pole tube secondary retaining pin(s) with cable. Locate on end of pike pole tube(s).	1
HANDRAILS / STEPS		
3330-0103	Dual lighted LED folding steps rear NFPA. Includes folding steps on driver side (staggered stepped as applicable with tailboard depth) for NFPA hosebed access and handrail mounted on driver side upper hosebed side (as applicable).	1
3330-0105-060	Dual lighted LED folding step. Location: officer side front compartment face. Each location requires a minimum of (1) handrail per NFPA.	1
3330-0105-062	Dual lighted LED folding step. Location: driver side front compartment face. Each location requires a minimum of (1) handrail per NFPA.	3
MISC BODY OPTIONS		
3090-0002	The unit has no overall height restrictions.	1
3090-0004	The unit has no overall length restrictions.	1

3090-0007	The hose bed is to have NFPA capacity.	1
3340-0004	Hosebed above the booster tank. Includes forward hosebed and tower(s) cover plate work (as applicable). Hosebed adjustable divider extrusion rearward of the furthest tower is to run full width of the hosebed (as is practical with other hosebed mounted equipment).	1
3340-0015	Diamond plate single axle wheel well. Includes bolt-on composite wheel well liners and aluminum trim fenderettes.	1
3340-0035	Divider Long. To run full length of hose bed (front to rear).	1
3340-0058	Recessed fuel fill driver side wheel well.	1
3340-0074	Body mainframe and hosebed side assemblies for a 85" high body.	1
3340-0093	Mud flaps, rear, black with E-ONE logo.	1
3340-0110	The rear of each hose bed divider to have a hand hold cut-out(s).	1
3340-0128	Bolt-in partition walls. Locate in lower rear compartment transverse area. Partitions to separate the side rear compartments from the rear compartment.	1
3340-0145	Rubrail for the body and pump area module(s).	1
SCBA BOTTLE STORAGE		
3320-0020	SCBA Bottle Storage. (4) Fire Shopp SCBA bottle storage with hinged doors with push button latches. (2) officer side and (2) driver side in wheel well area.	1
PUMPS		
4005-0016	Hale QMAX 1000-2250 GPM single stage pump.	1
4005-0031	Rating 1500 GPM.	1
PUMP CERTIFICATION		
4475-0000	Pump certification 750-2250 GPM	1
PUMP OPTIONS		
4015-0007	Pump cooler, 1/4" valve with 3/8" tubing.	1
4015-0008	Zinc anodes for Hale pump (PR), (1) discharge side and (1) intake side.	1
4015-0022	Mechanical pump seal - Hale.	1
4015-0052-198	Steamers to be Flush. Location: driver's side.	1
4015-0052-199	Steamers to be Flush. Location: officer's side.	1
4015-0098	Manually operated master pump drain. The master drain shall be clearly marked and placed in accessible location on pump panel.	1
INTAKES		
4440-0005	2.5" Left Intake Akron Manual Valve.	1
INTAKE OPTIONS		
4445-0016	Intake relief valve, Hale 2.5".	1
DISCHARGES AND PRECONNECTS		
4415-0012-654	1.5" crosslay with Akron manual valve. Location: crosslay 1 & 2.	2

4415-0022-350	2.5" Left Rear Discharge Akron Manual Valve. Location: left rear discharge.	1
4415-0034-583	3" Right Pump Panel Discharge Akron Manual Valve (Waterous pumps noted location to be forward lower port). Location: right side discharge 1.	1
4415-0041	3" Deck Gun Discharge, Akron manual valve.	1
4415-0161-581	2.5" Left Panel Discharge Akron Manual Valve w/30 Degree Droop. Location: left side discharge 1.	1
4415-0161-582	2.5" Left Panel Discharge Akron Manual Valve w/30 Degree Droop. Location: left side discharge 2.	1
4415-0164-584	2.5" Right Panel Discharge Akron Manual Valve w/30 Degree Droop. Location: right side discharge 2.	1
4417-0106-L65	Deck gun piping to be positioned centered in deck gun channel.	1
DISCHARGE OPTIONS		
4417-0070	Push-Pull "T" handle controls.	1
4417-0089-350	Lift lever quarter turn bleeder valve. Plumbed for use with: left rear discharge.	1
4417-0089-356	Lift lever quarter turn bleeder valve. Plumbed for use with: deck gun.	1
4417-0089-573	Lift lever quarter turn bleeder valve. Plumbed for use with: crosslay preconnect.	2
4417-0089-575	Lift lever quarter turn bleeder valve. Plumbed for use with: left discharge.	2
4417-0089-576	Lift lever quarter turn bleeder valve. Plumbed for use with: right discharge.	2
PRESSURE GOVERNORS		
4465-0011	Class 1 TPG pressure governor. Includes, water, oil, volt and tachometer.	1
GAUGES		
4435-0001	Class 1 Intelli-Tank water tank level gauge.	1
4435-0013	4.5" Class 1 compound pressure gauge (30-0-600 PSI).	2
4435-0015-350	2.5" Class 1 compound pressure gauge (30-0-600). Discharge(s): left rear discharge.	1
4435-0015-352	2.5" Class 1 compound pressure gauge (30-0-600). Discharge(s): 1.5 in. crosslay preconnect.	2
4435-0015-356	2.5" Class 1 compound pressure gauge (30-0-600). Discharge(s): deck gun.	1
4435-0015-581	2.5" Class 1 compound pressure gauge (30-0-600). Discharge(s): left side discharge 1.	1
4435-0015-582	2.5" Class 1 compound pressure gauge (30-0-600). Discharge(s): left side discharge 2.	1
4435-0015-583	2.5" Class 1 compound pressure gauge (30-0-600). Discharge(s): right side discharge 1.	1
4435-0015-584	2.5" Class 1 compound pressure gauge (30-0-600). Discharge(s): right side discharge 2.	1
ELECTRICAL SYSTEMS		
5010-0013-E91	Vehicle data recorder - 2009 NFPA compliant. Includes occupant detection with display. Display location: Driver side of center dash electrical cover.	1

5010-0036	V-MUX Electrical system for pumper / tanker / rescue.	1
5010-0059-339	VFD Text display for V-MUX electrical system. Location: center of dash.	1
LIGHT BARS		
5300-0055	Light bar Whelen Freedom model FN72QLED 72" LED with MKEZ7 mounts and clear lenses. Location: Centered on the front cab roof.	1
WARNING LIGHT PACKAGES		
5550-0059-535	Whelen Super LED lower level warning light package. Includes (8) red 600 LED light heads and (2) red 500 LED light heads w/chrome flanges. Locate side facing lights: at forward most position, centered in rear wheel well, and side facing at rear of body in rubrail if equipped.	1
WARNING LIGHTS		
5600-0078-479-06	Whelen Super LED beacon (PR) model L31H with Red domes. Location rear upper body on aerial style brackets.	1
5600-0149-170	Hazard (door ajar) light, 2.5" incandescent. Location: center overhead.	1
SIRENS		
5500-0015	Whelen model 295SLSA1 siren with microphone (replaced 295HFSA1).	1
5500-0024-170	The electronic siren control is to be located on the center overhead.	1
SPEAKERS		
5510-0018-209	Whelen SA122FMP electronic siren speaker recessed in front bumper. Location: driver side front bumper.	1
DOT LIGHTING		
5150-0007	Whelen 600 series LED vertical mount tail lights. Includes LED stop/tail, arrow turn and halogen back-up lights with vertical Cast 3 housing and weatherproof connectors.	1
5150-0017	License plate light LED with chrome housing located at the rear of the body.	1
5150-0025	Marker light LED body/cab package. E-One custom cab and pumper or tanker body only.	1
LIGHTS - COMPARTMENT, STEP & GROUND		
5380-0008	Compartment light package incandescent for small bodies.	1
5380-0027	Ground light package for cab and body - small.	1
LIGHTS - DECK AND SCENE		
5390-0000-395	Deck light - Unity 12 volt (PR). Location: rear body/beavertail area on the trailing edge up high.	1
5390-0003	Hose bed light Truck-Lite. Locate at the front area of the hose bed. Switched with work light switch in cab.	1
5390-0022	Crosslay light Truck-Lite. Locate to rear of crosslay (SM) and forward of crosslay (TM as applicable). Switched with work light switch in cab.	1
LIGHTS - NON-WARNING		

5400-0003	Engine compartment light (EA).	1
5400-0008	(1) pump panel light over the pump control area to be wired to come on when pump shift is placed in pump. (Side mount forward light noted, Top Mount is center light.)	1
5400-0010	Incandescent pump compartment light (EA).	1
5400-0039	Spotlight Specialty 2150 hand held located on officer's side of cab dash - hardwired.	1
5400-0047	Pump panel light package with (3) lights per side pump panel. Pump panels over 45" may require additional lights. Side mount only.	1
CONTROLS / SWITCHES		
5100-0000-199	Foot switch to control air horns located officer's side.	1
5100-0007-198	Foot switch to control electronic siren located driver's side.	1
MISC ELECTRICAL		
1750-0082-762	12V power distribution module. Includes (6) battery hot and (6) switched hot circuits. 100 amps max (IATS). Location: behind officer's seat.	1
5110-0017	Back-up alarm 97 dB.	1
HAND TOOLS		
7600-0005	Pike Pole Fiberglass 6'.	1
7600-0007	Pike Pole Fiberglass 10'.	1
HOSE / NOZZLES		
7700-0004	Hard suction hose 6" with Pyrolite couplings.	2
GROUND LADDERS		
7800-0007	Alco-Lite PRL-14' roof ladder.	1
7800-0016	Alco-Lite PEL-24' 2-section extension ladder.	1
7800-0032	Alco-Lite FL-10, 10' folding ladder w/safety shoes.	1
MISC LOOSE EQUIPMENT		
7900-0010	Chrome Barrel Strainer 6" NST.	1
7900-0014	DOT Required Drive Away Kit - Kit includes three (3) triangular warning reflectors with carrying case. This kit is for the end user and is to remain with the truck.	1
EXTERIOR PAINT		
8100-0089	All applicable pump/pre-connect application modules are to have a sanded finish (not painted job color). Includes upper and lower pump modules, crosswalk module and/or speedlay/pre-connect module (as applicable). Rear mounted body/pump module to be painted job color.	1
8100-0116	Rear body surface to have a sanded finish (not painted job color). Includes hinged doors that do not have discrete sales codes and removable panels.	1
8100-0176-000-17	Paint E-ONE chassis cab - Sikkens paint. Color: FLNA3225E-1 Red.	1
8100-0182-000-17	Paint Body - Small - For Pumpers, Rear Mounts, S/A Tankers/Wetsides and Rescues.	1

	Sikkens paint. Color: FLNA3225E-1 Red.		
8100-0186-000-39	Paint exterior surface of outer steel wheels. Sikkens paint. Color: Job Color.	1	
INTERIOR PAINT			
8150-0011	The interior of the cab to be painted Zolatone gray.	1	
STRIPING			
8300-0002-334-12	NFPA Scotchlite Stripe - 4" wide and straight on front/sides of cab and sides/rear of body. Color: White. Location: bottom of stripe flush with top of bumper and straight back.	1	
8300-0042	White rubrail scotchlite insert.	1	
8300-0084-000-72	Chevron "A" style 6" printed sheet Scotchlite striping on rear of body. Includes rear facing extrusions, panels and doors inboard/outboard of the beavertails (if applicable). Colors to be Yellow/Red.	1	
WARRANTY / STANDARD & EXTENDED			
9100-0000	Standard 1 Year Warranty.	1	
9100-0003	Lifetime Frame Warranty.	1	
9100-0004	10 Year/100,000 Mile Structural Warranty - Statement of Warranty.	1	
9100-0005	10 Year Stainless Steel Plumbing Warranty - Statement of Warranty.	1	
9100-0019	10 Year Limited Paint and Perforation Warranty - For Sikkens Paint.	1	
SUPPORT, DELIVERY, INSPECTIONS AND MANUALS			
9300-0009	Manuals, Operator and Service CD-ROM.	1	
9300-0016	Approval Drawings-Standard.	1	
PRICE	2013 E-ONE MAINLINE PUMPER - CYCLONE CUSTOM CHASSIS		$367,523

STATE OF OHIO TERM SCHEDULE

4200 SURFACE RD
COLUMBUS, OH 43228

Quote No: 57486

3/11/2013

Quote Rev:7 Drawing Rev:5

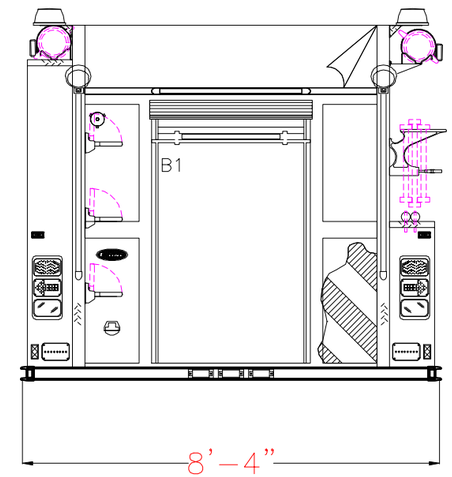

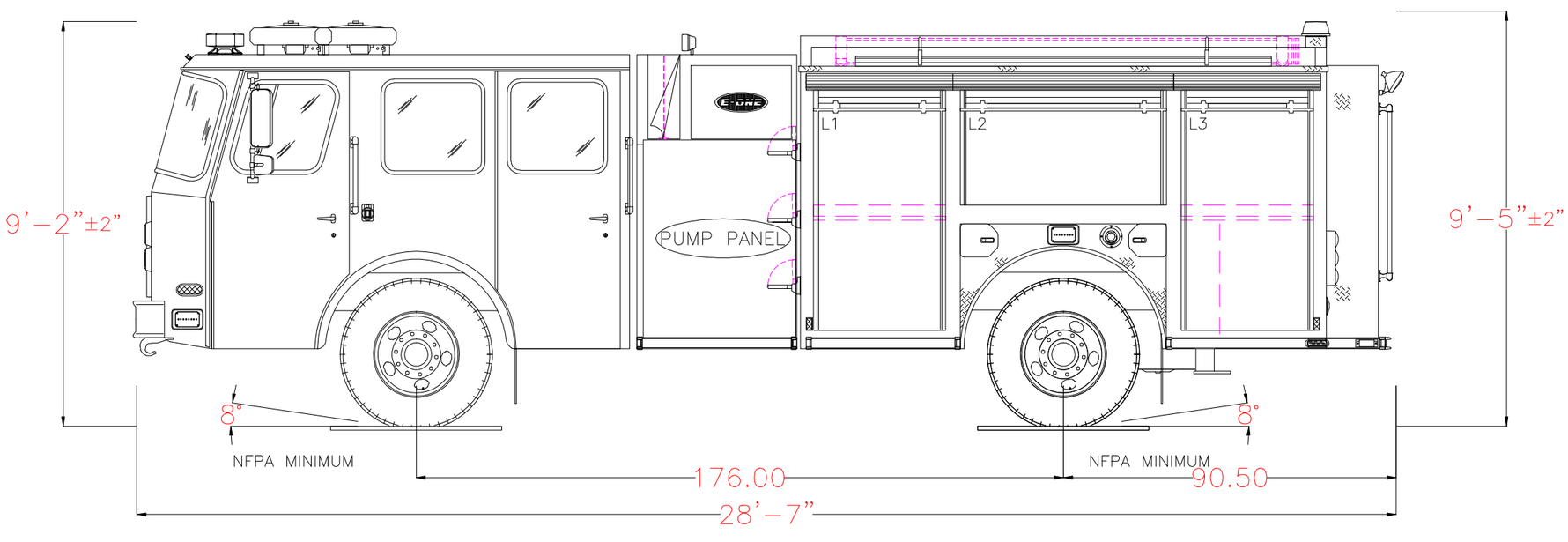

POWERED BY EZDRAW

Notice: This drawing provides a GENERAL REPRESENTATION of the vehicle configuration and should be used for evaluation purposes. The respective dimensions shown,including overall height and length, are estimates and may vary due to manufacturing processes. All other items such as lighting and fixtures, plumbing, compartmentation, and other generally assembled details are shown for REFERENCE ONLY and may not be a direct reflection of the final truck configuration. In ALL situations where this drawing may conflict with the specifications, THE SPECIFICATIONS, AS REFLECTED IN THE APPROVED SHOP ORDER, SHALL PREVAIL. Unless otherwise specified, the proposed apparatus will be manufactured to the latest NFPA recommendations as well as other applicable federally regulated safety regulations. E-One reserves the right to engineer and incorporate design improvements and changes without notice, while adhering to the intent of the specification.

1500 GPM HALE QMAXPUMP 0 TOTAL VOLUME 0 TOTAL FOAM	HOSE LOADS :

	OPENING		INTERIOR DIMENSIONS				
COMPT.	WIDTH	HEIGHT	WIDTH	LOWER HEIGHT	LOWER DEPTH	UPPER HEIGHT	UPPER DEPTH
L1	34	59.75	36	30	26	26.75	12
L2	54	25.75	56	N/A	N/A	26.75	12
L3	34	59.75	36	30	26	26.75	12
R1	34	21	36	30	26	N/A	N/A
R2	34	21	36	30	26	N/A	N/A
B1	36	45	38	30	26	24	14

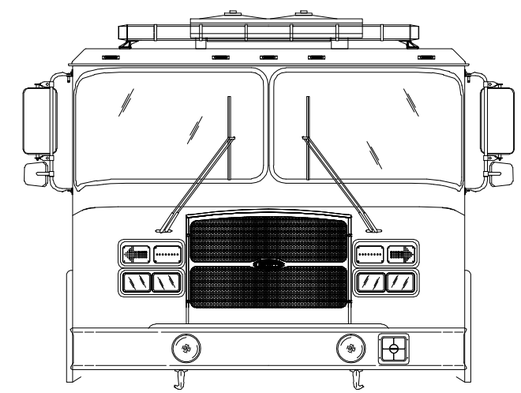

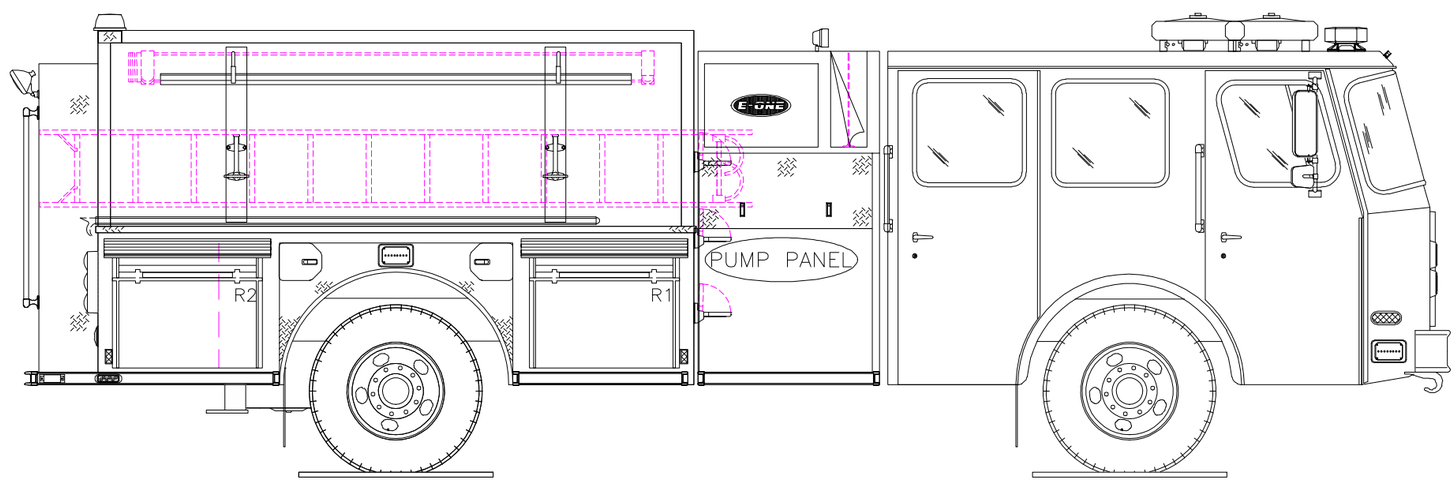

POWERED BY EZDRAW

Fire Apparatus Quotation for:
STATE OF OHIO TERM SCHEDULE

Quotation Number: 57487 Rev: 8

Unit Description: PMPR-TYPH

Quote Description: Rescue Pumper, Typhoon Chassis

Salescode	Extended Description	Qty
TESTING COMPLIANCE STANDARD		
1001-0015	The E-ONE supplied components of the vehicle shall meet the requirements of NFPA 1901, 2009 edition.	1
BUMPERS		
1160-0000	Bumper 10" stainless steel.	1
1160-0011	4" Front Bumper Extension.	1
FRAME ASSEMBLY		
1250-0003	Frame 10.25 x 3.5 x .375 chassis.	1
1250-0011	Rear underbody support frame.	1
AXLE OPTIONS		
1025-0004	Meritor FL941 front axle 18,000 lb.	1
1025-0016	Meritor RS-24-160 single rear axle 24,000 lb. capacity.	1
1025-0029	Front shock absorbers.	1
SUSPENSIONS		
1070-0001	Rear suspension springs rated equal to the capacity of the axle.	1
WHEEL OPTIONS		
1050-0000	Steel wheels for front axle (2).	1
1050-0002	Steel wheels for rear axle (4).	1
1050-0007	Front axle wheel trim kit. Includes stainless steel lug nut covers (chrome plated plastic if applicable) and center cap with E-ONE logo. Note: Center cap will have an inspection port IPO a logo if equipped with Stemco oil seals.	1
1050-0008	Rear axle (single) wheel trim kit. Includes stainless steel lug nut covers (chrome plated plastic if applicable) and center cap with E-ONE logo. E-ONE custom chassis w/steel wheels will have chrome plated plastic lug covers.	1
TIRE OPTIONS		

1060-0001	Two Michelin 315 tires model XZA-1 for front axle.	1
1060-0015	Four Michelin 11R rear tires with XDN2 mud and snow tread.	1
1060-0050	Tire pressure monitoring valve stem caps.	1
BRAKE SYSTEMS		
1100-0000	16-1/2" x 6" S-cam brakes with ArvinMeritor automatic slack adjusters for front axle.	1
1100-0002	ArvinMeritor 16-1/2" x 7" S-cam brakes with cast brake drums for a single rear axle.	1
1100-0005	Brake system air 4X2/4X4.	1
1100-0006	Parking brake release mounted on the driver's side lower dash.	1
AIR SYSTEM OPTIONS		
1110-0000-001	Inlet for air system. Location: driver door jamb.	1
1110-0002	Air dryer Bendix AD-9.	1
1110-0006	Air lines nylon.	1
1110-0041	Air horns Grover recessed in bumper (PR).	1
ENGINES & TRANSMISSIONS		
1200-0017	Push-button transmission shift selector.	1
1200-0020	TransSynd synthetic transmission fluid for EVS3000.	1
1200-0097	Electronically limited speed to 68 MPH maximum. Note: Max speed may be set at 65 MPH due to tire rating.	1
1200-0234	Eng/Trans Cummins ISL 350HP/EVS3000 2013 EPA compliant engine.	1
SECONDARY BRAKING		
1125-0002	Jacobs engine compression brake.	1
COOLING PACKAGE		
1800-0013	Cooling system for use with Cyclone II X, Typhoon X, and Quest chassis. For use with 2010/2013 EPA engines. Includes coolant recovery system.	1
FUEL SYSTEMS		
1350-0003	Fuel system 50 gallon.	1
1350-0022	Fuel line hose rubber.	1
ALTERNATOR		
1700-0003	Alternator Leece Neville 270 amp SAE, 240 amp NFPA rating.	1
BATTERIES		
1400-0002	Battery four group 31 1000 CCA.	1
CHASSIS OPTIONS		
1680-0006	Drivelines 1710.	1

1680-0011	Tow eyes rear below body, painted.	1
1680-0042	Tow hooks front painted in the down position.	1
1680-0250-M58	Diesel Exhaust Fluid (DEF) 5 gallon tank for 2013 EPA engines. Location: left side below rear of cab.	1
CAB MODEL		
1520-0013	Typhoon X medium cab with 58" CA	1
CAB ROOF TYPE		
1615-0010	Cab roof to be "flat" (non-vista).	1
CAB BADGE PACKAGE		
1610-0000	Cab and body to have applicable E-ONE logos.	1
GRILLE		
1620-0004	ABS chrome plated grille.	1
CAB DOOR OPTIONS		
1550-0003	Rear crew cab doors in the medium position.	1
1550-0005	Driver and officer cab door windows. Include forward vent windows.	1
1550-0011	Rear crew cab door windows. Includes manual roll-down actuation. Not available with paddle style door latching.	1
1550-0016	Cab door panels ABS.	1
1550-0025	All cab doors shall have "L" style exterior latches.	1
1550-0027	Front cab door windows to manually roll down.	1
1550-0037-659	(4) Incandescent cab step area lighting. Locate each light in on each cab door in the inboard position. Lights to be switched with door ajar.	1
1550-0044	All cab door kick plates to be made from diamond plate aluminum.	1
1550-0059-000-72	Reflective Yellow/Red printed striping positioned in the "A" formation located in the lower cab door panels.	1
1550-0077	Interior cab door locks - manual. Will be individually actuated from each respective door. Includes barrel style key lock on each exterior cab door.	1
1550-0084	All cab exterior access doors to have 1250 keyed locks.	1
MIRRORS		
1670-0003	Velvac 2010 mirrors. Door mounted west coast style with remote control and heat.	1
MISC EXTERIOR CAB OPTIONS		
1550-0020	Windows cab side fixed driver's side.	1
1550-0033	Windows cab side fixed officer's side.	1
1675-0022	Pair of 18" handrails located just behind driver and officer front door one each side.	1
1675-0023	Pair of 18" handrails located just behind driver and officer rear door (ALS doors if equipped) one each side.	1
1675-0030	Mud flaps, front, black with E-ONE logo.	1

1675-0047	Rear cab wall to be 3/16" aluminum diamond plate.	1
HVAC		
1515-0017	Air conditioning for the Typhoon X, CII X and Quest with Cummins ISC/ISL engine, radiator mounted condenser.	1
SEATS		
1510-0003	Seats, Inc. brand 911 cab seats.	1
1510-0007	Seat cover material vinyl.	1
1510-0008	Seat color gray.	1
1510-0035-147	Universal air pack bottle bracket (EA). Location: officer's seat.	1
1510-0035-148	Universal air pack bottle bracket (EA). Location: rear facing driver's side.	1
1510-0035-215	Universal air pack bottle bracket (EA). Location: rear facing officer's side.	1
1510-0038	Driver seat 911 air ride.	1
1510-0042	Officer seat to be 911 fixed SCBA.	1
1510-0050	Rear facing 911 seat with SCBA driver's side.	1
1510-0053	Rear facing 911 seat with SCBA officer's side.	1
1685-0031	Seating capacity tag of four occupants.	1
MISC INTERIOR CAB OPTIONS		
1685-0000	Cab interior gray. Does not include engine cover or seat color.	1
1685-0005	Lexan sun visors, driver and officer's side overhead.	1
1685-0168	ABS Dash package. Includes center and officer side dash, lower kick panels and "A" post covers.	1
1685-0187	Severe duty engine cover, molded polyurethane.	1
CAB ELECTRICAL OPTIONS		
1750-0013-172	Turn signal Whelen 600 LED amber arrow pair located upper headlight bezel.	1
1750-0029	Switch horn button two position DOT/air horn.	1
1750-0046-195	Cab Headlights. Position: lower.	1
1750-0059-179-04	Receptacle inlet 20 amp with a Yellow cover. Location: outside driver's door next to handrail.	1
1750-0072-593	12 VDC (or 24VDC) electrical outlet in the cab wired battery hot. Location: officer side dash.	2
1750-0075	English dominant main cab gauge cluster.	1
1750-0188	DPF regeneration override switch.	1
1750-0198-A31	Battery charger to be located behind driver's seat.	1
1750-0343	Battery charger E-ONE LPC 20. 120 volt inlet, 20 amp output.	1
5400-0037	Dome Lts Red/White Incandescent. Package includes two lights mounted in the front and two mounted in the rear of the cab. White light wire through door and light assembly mounted switch. Red light through light assembly mounted switch.	1

BODY COMPT LEFT SIDE		
3100-0153	Driver side body with full height 42" wide forward and 56" wide rearward enhanced extended compartmentation. Includes (1) 56" wide compartment over the wheel well.	1
BODY COMPT RIGHT SIDE		
3120-0283	Officer side body with full height 42" wide forward and 56" wide rearward enhanced extended compartmentation. Includes (1) 56" wide compartment over the wheel well and one (1) storage tunnel.	1
BODY COMPT REAR		
3110-0011	Full Height Rear Compartment with Upper Storage Compartment and Officer Side Storage Tunnel. Includes smooth plate panels and storage access doors with push button latches.	1
3110-0052	Bolt-on diamond plate tailboard (full width of rear compartment). Includes the enhanced extended side compartment frame work and handrails- (2) vertically on trailing edge of body and horizontally mounted handrail(s) below hosebed.	1
3110-0092	Enhanced Extended Compartmentation stepped down below hosebed level. Includes embossed diamond plate compartment tops.	1
DOORS		
3300-0017-004	Door roll up short (up to 45") with satin finish ROM. Location(s): L2.	1
3300-0017-016	Door roll up short (up to 45") with satin finish ROM. Location(s): R2.	1
3300-0019-003	Door roll up tall (greater than 45") with satin finish ROM. Location(s): L1.	1
3300-0019-005	Door roll up tall (greater than 45") with satin finish ROM. Location(s): L3.	1
3300-0019-015	Door roll up tall (greater than 45") with satin finish ROM. Location(s): R1.	1
3300-0019-017	Door roll up tall (greater than 45") with satin finish ROM. Location(s): R3.	1
3300-0019-027	Door roll up tall (greater than 45") with satin finish ROM. Location(s): B1.	1
SHELVES		
3370-0025-101	Permanent shelf. Locate in R1 at offset (above extrusion if applicable).	1
3370-0025-102	Permanent shelf. Locate in R3 at offset (above extrusion if applicable).	1
COVERS		
3305-0007-000-02	Vinyl Red hose bed cover with attached rear flap(s).	1
3305-0008-000-02	Vinyl Red crosslay cover with attached side flaps.	1
PUMP MODULE		
3130-0003	Pump module. Includes 39" wide pump panel opening and running boards.	1
3130-0013	Upper SM pump module with single stacked double crosslays and diamond plate storage pan.	1
3130-0167	Pump module to be 76" wide (side to side). Includes upper, lower, crosswalk, speedlay and tranverse module(s) if applicable.	1
PUMP PANELS		

3134-0011	Officer side pump panel to be vertically hinged on forward extrusion. Panel(s) to be secured in the closed position with push button latches. Upper panel to be held open with gas shock.	1
3134-0016	Stainless steel driver and officer side pump panels.	1
3134-0064	The gauge panel(s) on the driver side of the Side Mount module to be hinged upward. Panel(s) to include (2) mechanical/pneumatic (as applicable to panel size) hold opens and latches.	1
MISC PUMP PANEL OPTIONS		
4460-0003	Pump panel tags color coded per NFPA compliance.	1
PUMP MODULE OPTIONS		
3136-0048	Notched crosslay divider(s) on both ends for preconnect line(s) nozzle end storage with NFPA cover(s) in closed position.	1
3136-0058	E-ONE logo mounted one each side on pump module/preconnect panels. Logos to be sized as applicable to available space on panels.	1
WATER TANK		
4010-0175	530 Gallon "R" Water Tank UPF Poly III color fill towers. Note: Any foam cell(s) will reduce the overall water capacity.	1
TANK PLUMBING		
4450-0010	2" tank fill Akron manual valve.	1
4450-0119	3" tank to pump Akron manual valve w/4" plumbing.	1
LADDER STORAGE / RACKS		
3365-0028	Hard Suction Storage Rack. Driver side compartment top. Includes spring hold downs and scuff plates behind spring mounts (as applicable).	1
3365-0035	Hard Suction Storage Rack. Officer side compartment top. Includes spring hold downs and scuff plates behind spring mounts (as applicable).	1
3365-0049	Brand of ladders capable of being carried on unit to be Alco-Lite.	1
3365-0087-C57	The length of ladders capable of being stored shall be the following: 24' 2-section and 14' roof ladder.	1
3365-0149-I32	Storage tunnel capable of holding: (1) 2-section, (1) roof, (1) attic, (2) pike poles in Officer Side Storage Tunnel.	1
HANDRAILS / STEPS		
3330-0103	Dual lighted LED folding steps rear NFPA. Includes folding steps on driver side (staggered stepped as applicable with tailboard depth) for NFPA hosebed access and handrail mounted on driver side upper hosebed side (as applicable).	1
3330-0105-060	Dual lighted LED folding step. Location: officer side front compartment face. Each location requires a minimum of (1) handrail per NFPA.	3
3330-0105-062	Dual lighted LED folding step. Location: driver side front compartment face. Each location requires a minimum of (1) handrail per NFPA.	3
MISC BODY OPTIONS		
3090-0002	The unit has no overall height restrictions.	1

3090-0004	The unit has no overall length restrictions.	1
3090-0007	The hose bed is to have NFPA capacity.	1
3340-0004	Hosebed above the booster tank. Includes forward hosebed and tower(s) cover plate work (as applicable). Hosebed adjustable divider extrusion rearward of the furthest tower is to run full width of the hosebed (as is practical with other hosebed mounted equipment).	1
3340-0015	Diamond plate single axle wheel well. Includes bolt-on composite wheel well liners and aluminum trim fenderettes.	1
3340-0035	Divider Long. To run full length of hose bed (front to rear).	1
3340-0058	Recessed fuel fill driver side wheel well.	1
3340-0074	Body mainframe and hosebed side assemblies for a 85" high body.	1
3340-0093	Mud flaps, rear, black with E-ONE logo.	1
3340-0110	The rear of each hose bed divider to have a hand hold cut-out(s).	1
3340-0145	Rubrail for the body and pump area module(s).	1
SCBA BOTTLE STORAGE		
3320-0020	SCBA Bottle Storage. (4) Fire Shopp SCBA bottle storage with hinged doors with push button latches. (2) officer side and (2) driver side in wheel well area.	1
PUMPS		
4005-0016	Hale QMAX 1000-2250 GPM single stage pump.	1
4005-0031	Rating 1500 GPM.	1
PUMP CERTIFICATION		
4475-0000	Pump certification 750-2250 GPM	1
PUMP OPTIONS		
4015-0007	Pump cooler, 1/4" valve with 3/8" tubing.	1
4015-0008	Zinc anodes for Hale pump (PR), (1) discharge side and (1) intake side.	1
4015-0022	Mechanical pump seal - Hale.	1
4015-0052-198	Steamers to be Flush. Location: driver's side.	1
4015-0052-199	Steamers to be Flush. Location: officer's side.	1
4015-0098	Manually operated master pump drain. The master drain shall be clearly marked and placed in accessible location on pump panel.	1
INTAKES		
4440-0005	2.5" Left Intake Akron Manual Valve.	1
INTAKE OPTIONS		
4445-0016	Intake relief valve, Hale 2.5".	1
DISCHARGES AND PRECONNECTS		
4415-0012-654	1.5" crosslay with Akron manual valve. Location: crosslay 1 & 2.	2

4415-0022-350	2.5" Left Rear Discharge Akron Manual Valve. Location: left rear discharge.	1
4415-0034-583	3" Right Pump Panel Discharge Akron Manual Valve (Waterous pumps noted location to be forward lower port). Location: right side discharge 1.	1
4415-0041	3" Deck Gun Discharge, Akron manual valve.	1
4415-0161-581	2.5" Left Panel Discharge Akron Manual Valve w/30 Degree Droop. Location: left side discharge 1.	1
4415-0161-582	2.5" Left Panel Discharge Akron Manual Valve w/30 Degree Droop. Location: left side discharge 2.	1
4415-0164-584	2.5" Right Panel Discharge Akron Manual Valve w/30 Degree Droop. Location: right side discharge 2.	1
4417-0106-L65	Deck gun piping to be positioned centered in deck gun channel.	1
DISCHARGE OPTIONS		
4417-0070	Push-Pull "T" handle controls.	1
4417-0089-350	Lift lever quarter turn bleeder valve. Plumbed for use with: left rear discharge.	1
4417-0089-356	Lift lever quarter turn bleeder valve. Plumbed for use with: deck gun.	1
4417-0089-573	Lift lever quarter turn bleeder valve. Plumbed for use with: crosslay preconnect.	2
4417-0089-575	Lift lever quarter turn bleeder valve. Plumbed for use with: left discharge.	2
4417-0089-576	Lift lever quarter turn bleeder valve. Plumbed for use with: right discharge.	2
PRESSURE GOVERNORS		
4465-0011	Class 1 TPG pressure governor. Includes, water, oil, volt and tachometer.	1
GAUGES		
4435-0001	Class 1 Intelli-Tank water tank level gauge.	1
4435-0013	4.5" Class 1 compound pressure gauge (30-0-600 PSI).	2
4435-0015-350	2.5" Class 1 compound pressure gauge (30-0-600). Discharge(s): left rear discharge.	1
4435-0015-352	2.5" Class 1 compound pressure gauge (30-0-600). Discharge(s): 1.5 in. crosslay preconnect.	2
4435-0015-356	2.5" Class 1 compound pressure gauge (30-0-600). Discharge(s): deck gun.	1
4435-0015-581	2.5" Class 1 compound pressure gauge (30-0-600). Discharge(s): left side discharge 1.	1
4435-0015-582	2.5" Class 1 compound pressure gauge (30-0-600). Discharge(s): left side discharge 2.	1
4435-0015-583	2.5" Class 1 compound pressure gauge (30-0-600). Discharge(s): right side discharge 1.	1
4435-0015-584	2.5" Class 1 compound pressure gauge (30-0-600). Discharge(s): right side discharge 2.	1
ELECTRICAL SYSTEMS		
5010-0013-E91	Vehicle data recorder - 2009 NFPA compliant. Includes occupant detection with display. Display location: Driver side of center dash electrical cover.	1

5010-0036	V-MUX Electrical system for pumper / tanker / rescue.	1
5010-0059-339	VFD Text display for V-MUX electrical system. Location: center of dash.	1
LIGHT BARS		
5300-0055	Light bar Whelen Freedom model FN72QLED 72" LED with MKEZ7 mounts and clear lenses. Location: Centered on the front cab roof.	1
WARNING LIGHT PACKAGES		
5550-0059-535	Whelen Super LED lower level warning light package. Includes (8) red 600 LED light heads and (2) red 500 LED light heads w/chrome flanges. Locate side facing lights: at forward most position, centered in rear wheel well, and side facing at rear of body in rubrail if equipped.	1
WARNING LIGHTS		
5600-0078-479-06	Whelen Super LED beacon (PR) model L31H with Red domes. Location rear upper body on aerial style brackets.	1
5600-0149-170	Hazard (door ajar) light, 2.5" incandescent. Location: center overhead.	1
SIRENS		
5500-0015	Whelen model 295SLSA1 siren with microphone (replaced 295HFSA1).	1
5500-0024-170	The electronic siren control is to be located on the center overhead.	1
SPEAKERS		
5510-0018-209	Whelen SA122FMP electronic siren speaker recessed in front bumper. Location: driver side front bumper.	1
DOT LIGHTING		
5150-0007	Whelen 600 series LED vertical mount tail lights. Includes LED stop/tail, arrow turn and halogen back-up lights with vertical Cast 3 housing and weatherproof connectors.	1
5150-0017	License plate light LED with chrome housing located at the rear of the body.	1
5150-0025	Marker light LED body/cab package. E-One custom cab and pumper or tanker body only.	1
LIGHTS - COMPARTMENT, STEP & GROUND		
5380-0009	Compartment light package incandescent for medium bodies.	1
5380-0027	Ground light package for cab and body - small.	1
LIGHTS - DECK AND SCENE		
5390-0000-395	Deck light - Unity 12 volt (PR). Location: rear body/beavertail area on the trailing edge up high.	1
5390-0003	Hose bed light Truck-Lite. Locate at the front area of the hose bed. Switched with work light switch in cab.	1
5390-0022	Crosslay light Truck-Lite. Locate to rear of crosslay (SM) and forward of crosslay (TM as applicable). Switched with work light switch in cab.	1
LIGHTS - NON-WARNING		

5400-0003	Engine compartment light (EA).	1
5400-0008	(1) pump panel light over the pump control area to be wired to come on when pump shift is placed in pump. (Side mount forward light noted, Top Mount is center light.)	1
5400-0010	Incandescent pump compartment light (EA).	1
5400-0039	Spotlight Specialty 2150 hand held located on officer's side of cab dash - hardwired.	1
5400-0047	Pump panel light package with (3) lights per side pump panel. Pump panels over 45" may require additional lights. Side mount only.	1
CONTROLS / SWITCHES		
5100-0000-199	Foot switch to control air horns located officer's side.	1
5100-0007-198	Foot switch to control electronic siren located driver's side.	1
MISC ELECTRICAL		
1750-0082-762	12V power distribution module. Includes (6) battery hot and (6) switched hot circuits. 100 amps max (IATS). Location: behind officer's seat.	1
5110-0017	Back-up alarm 97 dB.	1
HAND TOOLS		
7600-0005	Pike Pole Fiberglass 6'.	1
7600-0007	Pike Pole Fiberglass 10'.	1
HOSE / NOZZLES		
7700-0004	Hard suction hose 6" with Pyrolite couplings.	2
GROUND LADDERS		
7800-0007	Alco-Lite PRL-14' roof ladder.	1
7800-0016	Alco-Lite PEL-24' 2-section extension ladder.	1
7800-0032	Alco-Lite FL-10, 10' folding ladder w/safety shoes.	1
MISC LOOSE EQUIPMENT		
7900-0010	Chrome Barrel Strainer 6" NST.	1
7900-0014	DOT Required Drive Away Kit - Kit includes three (3) triangular warning reflectors with carrying case. This kit is for the end user and is to remain with the truck.	1
EXTERIOR PAINT		
8100-0089	All applicable pump/pre-connect application modules are to have a sanded finish (not painted job color). Includes upper and lower pump modules, crosswalk module and/or speedlay/pre-connect module (as applicable). Rear mounted body/pump module to be painted job color.	1
8100-0116	Rear body surface to have a sanded finish (not painted job color). Includes hinged doors that do not have discrete sales codes and removable panels.	1
8100-0176-000-17	Paint E-ONE chassis cab - Sikkens paint. Color: FLNA3225E-1 Red.	1
8100-0182-000-17	Paint Body - Small - For Pumpers, Rear Mounts, S/A Tankers/Wetsides and Rescues.	1

	Sikkens paint. Color: FLNA3225E-1 Red.		
8100-0186-000-39	Paint exterior surface of outer steel wheels. Sikkens paint. Color: Job Color.	1	
INTERIOR PAINT			
8150-0011	The interior of the cab to be painted Zolatone gray.	1	
STRIPING			
8300-0002-334-12	NFPA Scotchlite Stripe - 4" wide and straight on front/sides of cab and sides/rear of body. Color: White. Location: bottom of stripe flush with top of bumper and straight back.	1	
8300-0042	White rubrail scotchlite insert.	1	
8300-0084-000-72	Chevron "A" style 6" printed sheet Scotchlite striping on rear of body. Includes rear facing extrusions, panels and doors inboard/outboard of the beavertails (if	1	
STRIPING			
	applicable). Colors to be Yellow/Red.		
WARRANTY / STANDARD & EXTENDED			
9100-0000	Standard 1 Year Warranty.	1	
9100-0003	Lifetime Frame Warranty.	1	
9100-0004	10 Year/100,000 Mile Structural Warranty - Statement of Warranty.	1	
9100-0005	10 Year Stainless Steel Plumbing Warranty - Statement of Warranty.	1	
9100-0019	10 Year Limited Paint and Perforation Warranty - For Sikkens Paint.	1	
SUPPORT, DELIVERY, INSPECTIONS AND MANUALS			
9300-0009	Manuals, Operator and Service CD-ROM.	1	
9300-0016	Approval Drawings-Standard.	1	
PRICE	2013 E-ONE MAINLINE RESCUE PUMPER - TYPHOON CUSTOM CHASSIS		$317,539

STATE OF OHIO TERM SCHEDULE

4200 SURFACE RD
COLUMBUS, OH 43228

Quote No: 57487

3/11/2013

Quote Rev:8 Drawing Rev:4

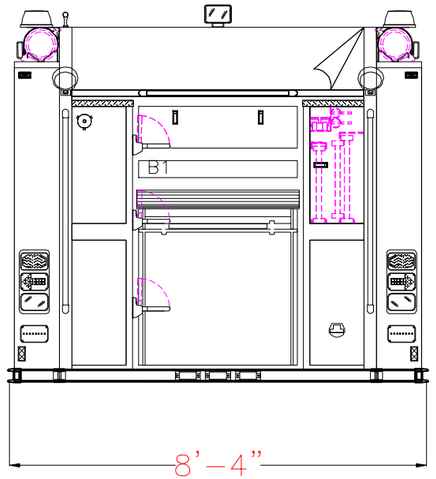

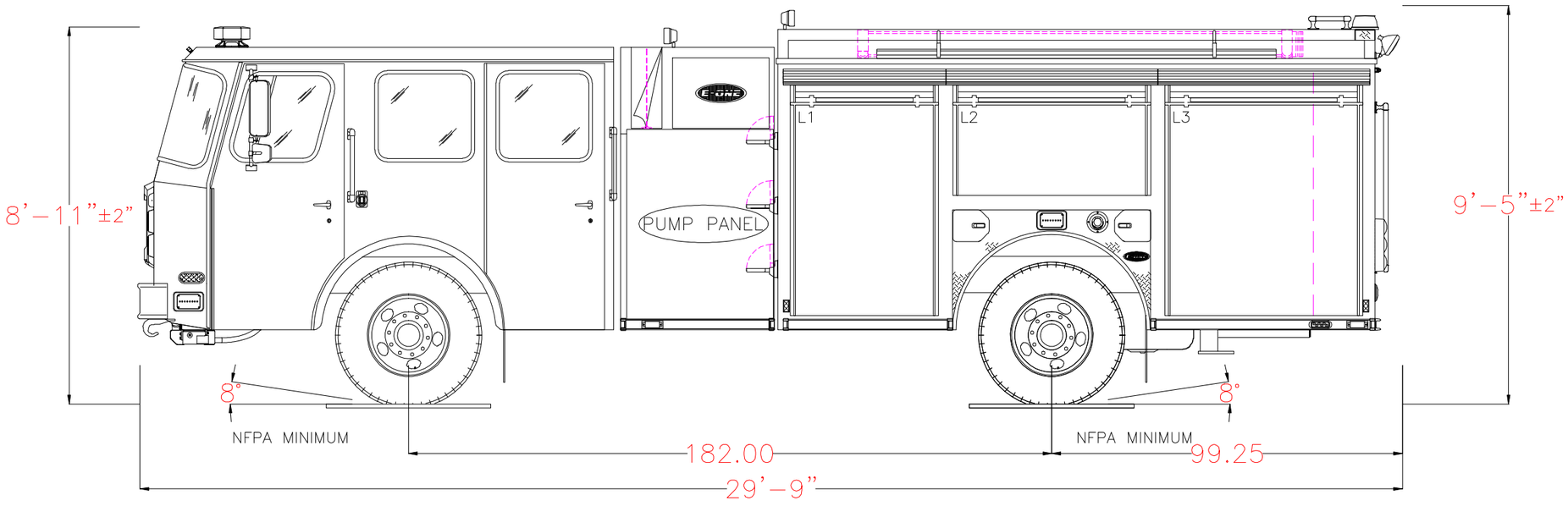

POWERED BY EZDRAW

Notice: This drawing provides a GENERAL REPRESENTATION of the vehicle configuration and should be used for evaluation purposes. The respective dimensions shown,including overall height and length, are estimates and may vary due to manufacturing processes. All other items such as lighting and fixtures, plumbing, compartmentation, and other generally assembled details are shown for REFERENCE ONLY and may not be a direct reflection of the final truck configuration. In ALL situations where this drawing may conflict with the specifications, THE SPECIFICATIONS, AS REFLECTED IN THE APPROVED SHOP ORDER, SHALL PREVAIL. Unless otherwise specified, the proposed apparatus will be manufactured to the latest NFPA recommendations as well as other applicable federally regulated safety regulations. E-One reserves the right to engineer and incorporate design improvements and changes without notice, while adhering to the intent of the specification.

1500 GPM HALE QMAXPUMP 0 TOTAL VOLUME 0 TOTAL FOAM	HOSE LOADS :

	OPENING		INTERIOR DIMENSIONS				
COMPT.	WIDTH	HEIGHT	WIDTH	LOWER HEIGHT	LOWER DEPTH	UPPER HEIGHT	UPPER DEPTH
L1	40	59.75	42	30	26	26.75	26
L2	54	25.75	56	N/A	N/A	26.75	26
L3	54	59.75	56	30	26	26.75	26
R1	40	59.75	42	30	26	26.75	12
R2	54	25.75	56	N/A	N/A	26.75	12
R3	54	59.75	56	30	26	26.75	12
B1	36	45	38	30	26	24	14

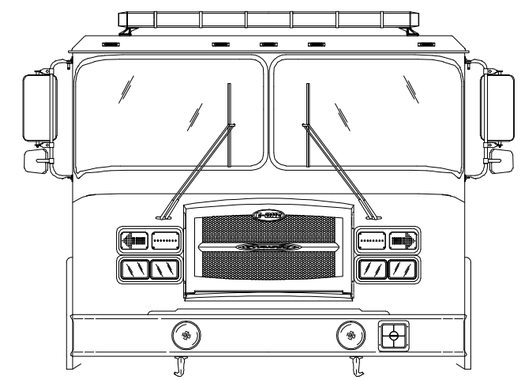

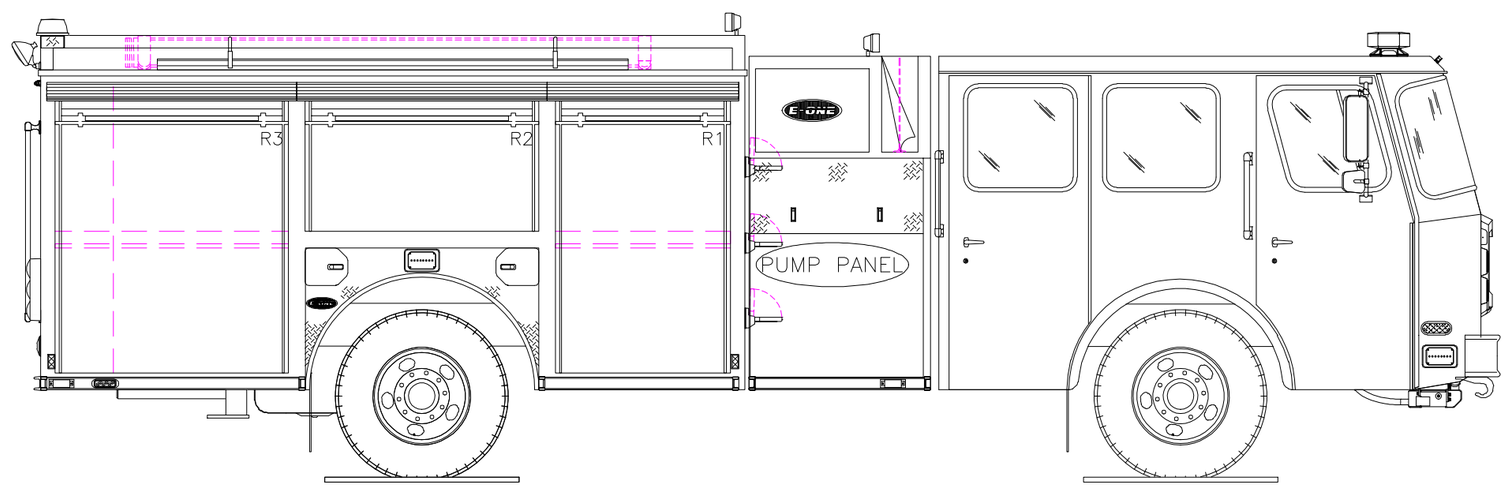

POWERED BY EZDRAW

Fire Apparatus Quotation for:
STATE OF OHIO TERM SCHEDULE

Quotation Number: 57488 Rev: 7

Unit Description: PMPR-CYC2

Quote Description: Pumper, Cyclone II

Salescode	Extended Description	Qty
TESTING COMPLIANCE STANDARD		
1001-0015	The E-ONE supplied components of the vehicle shall meet the requirements of NFPA 1901, 2009 edition.	1
BUMPERS		
1160-0000	Bumper 10" stainless steel.	1
1160-0011	4" Front Bumper Extension.	1
FRAME ASSEMBLY		
1250-0003	Frame 10.25 x 3.5 x .375 chassis.	1
1250-0011	Rear underbody support frame.	1
AXLE OPTIONS		
1025-0009	Meritor FL943 front axle 18,000 lbs.	1
1025-0016	Meritor RS-24-160 single rear axle 24,000 lb. capacity.	1
1025-0029	Front shock absorbers.	1
SUSPENSIONS		
1070-0001	Rear suspension springs rated equal to the capacity of the axle.	1
WHEEL OPTIONS		
1050-0000	Steel wheels for front axle (2).	1
1050-0002	Steel wheels for rear axle (4).	1
1050-0007	Front axle wheel trim kit. Includes stainless steel lug nut covers (chrome plated plastic if applicable) and center cap with E-ONE logo. Note: Center cap will have an inspection port IPO a logo if equipped with Stemco oil seals.	1
1050-0008	Rear axle (single) wheel trim kit. Includes stainless steel lug nut covers (chrome plated plastic if applicable) and center cap with E-ONE logo. E-ONE custom chassis w/steel wheels will have chrome plated plastic lug covers.	1
TIRE OPTIONS		

1060-0001	Two Michelin 315 tires model XZA-1 for front axle.	1
1060-0015	Four Michelin 11R rear tires with XDN2 mud and snow tread.	1
1060-0050	Tire pressure monitoring valve stem caps.	1
BRAKE SYSTEMS		
1100-0000	16-1/2" x 6" S-cam brakes with ArvinMeritor automatic slack adjusters for front axle.	1
1100-0002	ArvinMeritor 16-1/2" x 7" S-cam brakes with cast brake drums for a single rear axle.	1
1100-0005	Brake system air 4X2/4X4.	1
1100-0006	Parking brake release mounted on the driver's side lower dash.	1
AIR SYSTEM OPTIONS		
1110-0000-001	Inlet for air system. Location: driver door jamb.	1
1110-0002	Air dryer Bendix AD-9.	1
1110-0006	Air lines nylon.	1
1110-0041	Air horns Grover recessed in bumper (PR).	1
ENGINES & TRANSMISSIONS		
1200-0017	Push-button transmission shift selector.	1
1200-0021	TransSynd synthetic transmission fluid for EVS 4000.	1
1200-0097	Electronically limited speed to 68 MPH maximum. Note: Max speed may be set at 65 MPH due to tire rating.	1
1200-0238	Eng/Trans Cummins ISX12 450HP with EVS4000 transmission. 2013 EPA Compliant.	1
SECONDARY BRAKING		
1125-0002	Jacobs engine compression brake.	1
COOLING PACKAGE		
1800-0013	Cooling system for use with Cyclone II X, Typhoon X, and Quest chassis. For use with 2010/2013 EPA engines. Includes coolant recovery system.	1
FUEL SYSTEMS		
1350-0003	Fuel system 50 gallon.	1
1350-0022	Fuel line hose rubber.	1
ALTERNATOR		
1700-0003	Alternator Leece Neville 270 amp SAE, 240 amp NFPA rating.	1
BATTERIES		
1400-0002	Battery four group 31 1000 CCA.	1
CHASSIS OPTIONS		
1680-0005	Thermatic fan clutch.	1

1680-0007	Drivelines 1810. Required on 1550 lb/ft torque engines.	1
1680-0011	Tow eyes rear below body, painted.	1
1680-0042	Tow hooks front painted in the down position.	1
1680-0250-M58	Diesel Exhaust Fluid (DEF) 5 gallon tank for 2013 EPA engines. Location: left side below rear of cab.	1
CAB MODEL		
1520-0008	Cyclone II X medium cab with 58" CA	1
CAB ROOF TYPE		
1615-0010	Cab roof to be "flat" (non-vista).	1
CAB BADGE PACKAGE		
1610-0000	Cab and body to have applicable E-ONE logos.	1
CAB DOOR OPTIONS		
1550-0003	Rear crew cab doors in the medium position.	1
1550-0005	Driver and officer cab door windows. Include forward vent windows.	1
1550-0011	Rear crew cab door windows. Includes manual roll-down actuation. Not available with paddle style door latching.	1
1550-0016	Cab door panels ABS.	1
1550-0025	All cab doors shall have "L" style exterior latches.	1
1550-0027	Front cab door windows to manually roll down.	1
1550-0037-659	(4) Incandescent cab step area lighting. Locate each light in on each cab door in the inboard position. Lights to be switched with door ajar.	1
1550-0044	All cab door kick plates to be made from diamond plate aluminum.	1
1550-0059-000-72	Reflective Yellow/Red printed striping positioned in the "A" formation located in the lower cab door panels.	1
1550-0077	Interior cab door locks - manual. Will be individually actuated from each respective door. Includes barrel style key lock on each exterior cab door.	1
1550-0084	All cab exterior access doors to have 1250 keyed locks.	1
MIRRORS		
1670-0003	Velvac 2010 mirrors. Door mounted west coast style with remote control and heat.	1
MISC EXTERIOR CAB OPTIONS		
1550-0020	Windows cab side fixed driver's side.	1
1550-0033	Windows cab side fixed officer's side.	1
1675-0022	Pair of 18" handrails located just behind driver and officer front door one each side.	1
1675-0023	Pair of 18" handrails located just behind driver and officer rear door (ALS doors if equipped) one each side.	1
1675-0030	Mud flaps, front, black with E-ONE logo.	1
1675-0047	Rear cab wall to be 3/16" aluminum diamond plate.	1

HVAC		
1515-0018	Air conditioning for the CII X and Quest with Cummins ISM, ISX or Detroit Diesel Series 60 engine, roof top mounted condenser.	1
1685-0057	Heaters rear with covers (PR), and front heater with heat to the feet for the driver and officer.	1
SEATS		
1510-0003	Seats, Inc. brand 911 cab seats.	1
1510-0007	Seat cover material vinyl.	1
1510-0008	Seat color gray.	1
1510-0035-147	Universal air pack bottle bracket (EA). Location: officer's seat.	1
1510-0035-148	Universal air pack bottle bracket (EA). Location: rear facing driver's side.	1
1510-0035-215	Universal air pack bottle bracket (EA). Location: rear facing officer's side.	1
1510-0038	Driver seat 911 air ride.	1
1510-0042	Officer seat to be 911 fixed SCBA.	1
1510-0050	Rear facing 911 seat with SCBA driver's side.	1
1510-0053	Rear facing 911 seat with SCBA officer's side.	1
1685-0031	Seating capacity tag of four occupants.	1
MISC INTERIOR CAB OPTIONS		
1685-0000	Cab interior gray. Does not include engine cover or seat color.	1
1685-0005	Lexan sun visors, driver and officer's side overhead.	1
1685-0168	ABS Dash package. Includes center and officer side dash, lower kick panels and "A" post covers.	1
1685-0187	Severe duty engine cover, molded polyurethane.	1
CAB ELECTRICAL OPTIONS		
1750-0013-172	Turn signal Whelen 600 LED amber arrow pair located upper headlight bezel.	1
1750-0029	Switch horn button two position DOT/air horn.	1
1750-0046-195	Cab Headlights. Position: lower.	1
1750-0059-179-04	Receptacle inlet 20 amp with a Yellow cover. Location: outside driver's door next to handrail.	1
1750-0072-593	12 VDC (or 24VDC) electrical outlet in the cab wired battery hot. Location: officer side dash.	2
1750-0075	English dominant main cab gauge cluster.	1
1750-0188	DPF regeneration override switch.	1
1750-0198-A31	Battery charger to be located behind driver's seat.	1
1750-0343	Battery charger E-ONE LPC 20. 120 volt inlet, 20 amp output.	1
5400-0037	Dome Lts Red/White Incandescent. Package includes two lights mounted in the front and two mounted in the rear of the cab. White light wire through door and light assembly mounted switch. Red light through light assembly mounted switch.	1

BODY COMPT LEFT SIDE		
3100-0153	Driver side body with full height 42" wide forward and 56" wide rearward enhanced extended compartmentation. Includes (1) 56" wide compartment over the wheel well.	1
BODY COMPT RIGHT SIDE		
3120-0283	Officer side body with full height 42" wide forward and 56" wide rearward enhanced extended compartmentation. Includes (1) 56" wide compartment over the wheel well and one (1) storage tunnel.	1
BODY COMPT REAR		
3110-0011	Full Height Rear Compartment with Upper Storage Compartment and Officer Side Storage Tunnel. Includes smooth plate panels and storage access doors with push button latches.	1
3110-0052	Bolt-on diamond plate tailboard (full width of rear compartment). Includes the enhanced extended side compartment frame work and handrails- (2) vertically on trailing edge of body and horizontally mounted handrail(s) below hosebed.	1
3110-0092	Enhanced Extended Compartmentation stepped down below hosebed level. Includes embossed diamond plate compartment tops.	1
DOORS		
3300-0017-004	Door roll up short (up to 45") with satin finish ROM. Location(s): L2.	1
3300-0017-016	Door roll up short (up to 45") with satin finish ROM. Location(s): R2.	1
3300-0019-003	Door roll up tall (greater than 45") with satin finish ROM. Location(s): L1.	1
3300-0019-005	Door roll up tall (greater than 45") with satin finish ROM. Location(s): L3.	1
3300-0019-015	Door roll up tall (greater than 45") with satin finish ROM. Location(s): R1.	1
3300-0019-017	Door roll up tall (greater than 45") with satin finish ROM. Location(s): R3.	1
3300-0019-027	Door roll up tall (greater than 45") with satin finish ROM. Location(s): B1.	1
SHELVES		
3370-0025-101	Permanent shelf. Locate in R1 at offset (above extrusion if applicable).	1
3370-0025-102	Permanent shelf. Locate in R3 at offset (above extrusion if applicable).	1
COVERS		
3305-0007-000-02	Vinyl Red hose bed cover with attached rear flap(s).	1
3305-0008-000-02	Vinyl Red crosslay cover with attached side flaps.	1
PUMP MODULE		
3130-0003	Pump module. Includes 39" wide pump panel opening and running boards.	1
3130-0013	Upper SM pump module with single stacked double crosslays and diamond plate storage pan.	1
3130-0167	Pump module to be 76" wide (side to side). Includes upper, lower, crosswalk, speedlay and tranverse module(s) if applicable.	1
PUMP PANELS		

3134-0011	Officer side pump panel to be vertically hinged on forward extrusion. Panel(s) to be secured in the closed position with push button latches. Upper panel to be held open with gas shock.	1
3134-0016	Stainless steel driver and officer side pump panels.	1
3134-0064	The gauge panel(s) on the driver side of the Side Mount module to be hinged upward. Panel(s) to include (2) mechanical/pneumatic (as applicable to panel size) hold opens and latches.	1
MISC PUMP PANEL OPTIONS		
4460-0003	Pump panel tags color coded per NFPA compliance.	1
PUMP MODULE OPTIONS		
3136-0048	Notched crosslay divider(s) on both ends for preconnect line(s) nozzle end storage with NFPA cover(s) in closed position.	1
3136-0058	E-ONE logo mounted one each side on pump module/preconnect panels. Logos to be sized as applicable to available space on panels.	1
WATER TANK		
4010-0175	530 Gallon "R" Water Tank UPF Poly III color fill towers. Note: Any foam cell(s) will reduce the overall water capacity.	1
TANK PLUMBING		
4450-0010	2" tank fill Akron manual valve.	1
4450-0119	3" tank to pump Akron manual valve w/4" plumbing.	1
LADDER STORAGE / RACKS		
3365-0028	Hard Suction Storage Rack. Driver side compartment top. Includes spring hold downs and scuff plates behind spring mounts (as applicable).	1
3365-0035	Hard Suction Storage Rack. Officer side compartment top. Includes spring hold downs and scuff plates behind spring mounts (as applicable).	1
3365-0049	Brand of ladders capable of being carried on unit to be Alco-Lite.	1
3365-0087-C57	The length of ladders capable of being stored shall be the following: 24' 2-section and 14' roof ladder.	1
3365-0149-I32	Storage tunnel capable of holding: (1) 2-section, (1) roof, (1) attic, (2) pike poles in Officer Side Storage Tunnel.	1
HANDRAILS / STEPS		
3330-0103	Dual lighted LED folding steps rear NFPA. Includes folding steps on driver side (staggered stepped as applicable with tailboard depth) for NFPA hosebed access and handrail mounted on driver side upper hosebed side (as applicable).	1
3330-0105-060	Dual lighted LED folding step. Location: officer side front compartment face. Each location requires a minimum of (1) handrail per NFPA.	3
3330-0105-062	Dual lighted LED folding step. Location: driver side front compartment face. Each location requires a minimum of (1) handrail per NFPA.	3
MISC BODY OPTIONS		
3090-0002	The unit has no overall height restrictions.	1

3090-0004	The unit has no overall length restrictions.	1
3090-0007	The hose bed is to have NFPA capacity.	1
3340-0004	Hosebed above the booster tank. Includes forward hosebed and tower(s) cover plate work (as applicable). Hosebed adjustable divider extrusion rearward of the furthest tower is to run full width of the hosebed (as is practical with other hosebed mounted equipment).	1
3340-0015	Diamond plate single axle wheel well. Includes bolt-on composite wheel well liners and aluminum trim fenderettes.	1
3340-0035	Divider Long. To run full length of hose bed (front to rear).	1
3340-0058	Recessed fuel fill driver side wheel well.	1
3340-0074	Body mainframe and hosebed side assemblies for a 85" high body.	1
3340-0093	Mud flaps, rear, black with E-ONE logo.	1
3340-0110	The rear of each hose bed divider to have a hand hold cut-out(s).	1
3340-0145	Rubrail for the body and pump area module(s).	1
SCBA BOTTLE STORAGE		
3320-0020	SCBA Bottle Storage. (4) Fire Shopp SCBA bottle storage with hinged doors with push button latches. (2) officer side and (2) driver side in wheel well area.	1
PUMPS		
4005-0016	Hale QMAX 1000-2250 GPM single stage pump.	1
4005-0031	Rating 1500 GPM.	1
PUMP CERTIFICATION		
4475-0000	Pump certification 750-2250 GPM	1
PUMP OPTIONS		
4015-0007	Pump cooler, 1/4" valve with 3/8" tubing.	1
4015-0008	Zinc anodes for Hale pump (PR), (1) discharge side and (1) intake side.	1
4015-0022	Mechanical pump seal - Hale.	1
4015-0052-198	Steamers to be Flush. Location: driver's side.	1
4015-0052-199	Steamers to be Flush. Location: officer's side.	1
4015-0098	Manually operated master pump drain. The master drain shall be clearly marked and placed in accessible location on pump panel.	1
INTAKES		
4440-0005	2.5" Left Intake Akron Manual Valve.	1
INTAKE OPTIONS		
4445-0016	Intake relief valve, Hale 2.5".	1
DISCHARGES AND PRECONNECTS		
4415-0012-654	1.5" crosslay with Akron manual valve. Location: crosslay 1 & 2.	2

4415-0022-350	2.5" Left Rear Discharge Akron Manual Valve. Location: left rear discharge.	1
4415-0034-583	3" Right Pump Panel Discharge Akron Manual Valve (Waterous pumps noted location to be forward lower port). Location: right side discharge 1.	1
4415-0041	3" Deck Gun Discharge, Akron manual valve.	1
4415-0161-581	2.5" Left Panel Discharge Akron Manual Valve w/30 Degree Droop. Location: left side discharge 1.	1
4415-0161-582	2.5" Left Panel Discharge Akron Manual Valve w/30 Degree Droop. Location: left side discharge 2.	1
4415-0164-584	2.5" Right Panel Discharge Akron Manual Valve w/30 Degree Droop. Location: right side discharge 2.	1
4417-0106-L65	Deck gun piping to be positioned centered in deck gun channel.	1
DISCHARGE OPTIONS		
4417-0070	Push-Pull "T" handle controls.	1
4417-0089-350	Lift lever quarter turn bleeder valve. Plumbed for use with: left rear discharge.	1
4417-0089-356	Lift lever quarter turn bleeder valve. Plumbed for use with: deck gun.	1
4417-0089-573	Lift lever quarter turn bleeder valve. Plumbed for use with: crosslay preconnect.	2
4417-0089-575	Lift lever quarter turn bleeder valve. Plumbed for use with: left discharge.	2
4417-0089-576	Lift lever quarter turn bleeder valve. Plumbed for use with: right discharge.	2
PRESSURE GOVERNORS		
4465-0011	Class 1 TPG pressure governor. Includes, water, oil, volt and tachometer.	1
GAUGES		
4435-0001	Class 1 Intelli-Tank water tank level gauge.	1
4435-0013	4.5" Class 1 compound pressure gauge (30-0-600 PSI).	2
4435-0015-350	2.5" Class 1 compound pressure gauge (30-0-600). Discharge(s): left rear discharge.	1
4435-0015-352	2.5" Class 1 compound pressure gauge (30-0-600). Discharge(s): 1.5 in. crosslay preconnect.	2
4435-0015-356	2.5" Class 1 compound pressure gauge (30-0-600). Discharge(s): deck gun.	1
4435-0015-581	2.5" Class 1 compound pressure gauge (30-0-600). Discharge(s): left side discharge 1.	1
4435-0015-582	2.5" Class 1 compound pressure gauge (30-0-600). Discharge(s): left side discharge 2.	1
4435-0015-583	2.5" Class 1 compound pressure gauge (30-0-600). Discharge(s): right side discharge 1.	1
4435-0015-584	2.5" Class 1 compound pressure gauge (30-0-600). Discharge(s): right side discharge 2.	1
ELECTRICAL SYSTEMS		
5010-0013-E91	Vehicle data recorder - 2009 NFPA compliant. Includes occupant detection with display. Display location: Driver side of center dash electrical cover.	1

5010-0036	V-MUX Electrical system for pumper / tanker / rescue.	1
5010-0059-339	VFD Text display for V-MUX electrical system. Location: center of dash.	1
LIGHT BARS		
5300-0055	Light bar Whelen Freedom model FN72QLED 72" LED with MKEZ7 mounts and clear lenses. Location: Centered on the front cab roof.	1
WARNING LIGHT PACKAGES		
5550-0059-535	Whelen Super LED lower level warning light package. Includes (8) red 600 LED light heads and (2) red 500 LED light heads w/chrome flanges. Locate side facing lights: at forward most position, centered in rear wheel well, and side facing at rear of body in rubrail if equipped.	1
WARNING LIGHTS		
5600-0078-479-06	Whelen Super LED beacon (PR) model L31H with Red domes. Location rear upper body on aerial style brackets.	1
5600-0149-170	Hazard (door ajar) light, 2.5" incandescent. Location: center overhead.	1
SIRENS		
5500-0015	Whelen model 295SLSA1 siren with microphone (replaced 295HFSA1).	1
5500-0024-170	The electronic siren control is to be located on the center overhead.	1
SPEAKERS		
5510-0018-209	Whelen SA122FMP electronic siren speaker recessed in front bumper. Location: driver side front bumper.	1
DOT LIGHTING		
5150-0007	Whelen 600 series LED vertical mount tail lights. Includes LED stop/tail, arrow turn and halogen back-up lights with vertical Cast 3 housing and weatherproof connectors.	1
5150-0017	License plate light LED with chrome housing located at the rear of the body.	1
5150-0025	Marker light LED body/cab package. E-One custom cab and pumper or tanker body only.	1
LIGHTS - COMPARTMENT, STEP & GROUND		
5380-0009	Compartment light package incandescent for medium bodies.	1
5380-0027	Ground light package for cab and body - small.	1
LIGHTS - DECK AND SCENE		
5390-0000-395	Deck light - Unity 12 volt (PR). Location: rear body/beavertail area on the trailing edge up high.	1
5390-0003	Hose bed light Truck-Lite. Locate at the front area of the hose bed. Switched with work light switch in cab.	1
5390-0022	Crosslay light Truck-Lite. Locate to rear of crosslay (SM) and forward of crosslay (TM as applicable). Switched with work light switch in cab.	1
LIGHTS - NON-WARNING		

5400-0003	Engine compartment light (EA).	1
5400-0008	(1) pump panel light over the pump control area to be wired to come on when pump shift is placed in pump. (Side mount forward light noted, Top Mount is center light.)	1
5400-0010	Incandescent pump compartment light (EA).	1
5400-0039	Spotlight Specialty 2150 hand held located on officer's side of cab dash - hardwired.	1
5400-0047	Pump panel light package with (3) lights per side pump panel. Pump panels over 45" may require additional lights. Side mount only.	1
CONTROLS / SWITCHES		
5100-0000-199	Foot switch to control air horns located officer's side.	1
5100-0007-198	Foot switch to control electronic siren located driver's side.	1
MISC ELECTRICAL		
1750-0082-762	12V power distribution module. Includes (6) battery hot and (6) switched hot circuits. 100 amps max (IATS). Location: behind officer's seat.	1
5110-0017	Back-up alarm 97 dB.	1
HAND TOOLS		
7600-0005	Pike Pole Fiberglass 6'.	1
7600-0007	Pike Pole Fiberglass 10'.	1
HOSE / NOZZLES		
7700-0004	Hard suction hose 6" with Pyrolite couplings.	2
GROUND LADDERS		
7800-0007	Alco-Lite PRL-14' roof ladder.	1
7800-0016	Alco-Lite PEL-24' 2-section extension ladder.	1
7800-0032	Alco-Lite FL-10, 10' folding ladder w/safety shoes.	1
MISC LOOSE EQUIPMENT		
7900-0010	Chrome Barrel Strainer 6" NST.	1
7900-0014	DOT Required Drive Away Kit - Kit includes three (3) triangular warning reflectors with carrying case. This kit is for the end user and is to remain with the truck.	1
EXTERIOR PAINT		
8100-0089	All applicable pump/pre-connect application modules are to have a sanded finish (not painted job color). Includes upper and lower pump modules, crosswalk module and/or speedlay/pre-connect module (as applicable). Rear mounted body/pump module to be painted job color.	1
8100-0116	Rear body surface to have a sanded finish (not painted job color). Includes hinged doors that do not have discrete sales codes and removable panels.	1
8100-0176-000-17	Paint E-ONE chassis cab - Sikkens paint. Color: FLNA3225E-1 Red.	1
8100-0182-000-17	Paint Body - Small - For Pumpers, Rear Mounts, S/A Tankers/Wetsides and Rescues.	1

	Sikkens paint. Color: FLNA3225E-1 Red.		
8100-0186-000-39	Paint exterior surface of outer steel wheels. Sikkens paint. Color: Job Color.	1	
INTERIOR PAINT			
8150-0011	The interior of the cab to be painted Zolatone gray.	1	
STRIPING			
8300-0002-334-12	NFPA Scotchlite Stripe - 4" wide and straight on front/sides of cab and sides/rear of body. Color: White. Location: bottom of stripe flush with top of bumper and straight back.	1	
8300-0042	White rubrail scotchlite insert.	1	
8300-0084-000-72	Chevron "A" style 6" printed sheet Scotchlite striping on rear of body. Includes rear facing extrusions, panels and doors inboard/outboard of the beavertails (if	1	
STRIPING			
	applicable). Colors to be Yellow/Red.		
WARRANTY / STANDARD & EXTENDED			
9100-0000	Standard 1 Year Warranty.	1	
9100-0003	Lifetime Frame Warranty.	1	
9100-0004	10 Year/100,000 Mile Structural Warranty - Statement of Warranty.	1	
9100-0005	10 Year Stainless Steel Plumbing Warranty - Statement of Warranty.	1	
9100-0019	10 Year Limited Paint and Perforation Warranty - For Sikkens Paint.	1	
SUPPORT, DELIVERY, INSPECTIONS AND MANUALS			
9300-0009	Manuals, Operator and Service CD-ROM.	1	
9300-0016	Approval Drawings-Standard.	1	
PRICE	2013 E-ONE MAINLINE RESCUE PUMPER - CYCLONE CUSTOM CHASSIS		$380,616.

STATE OF OHIO TERM SCHEDULE

4200 SURFACE RD
COLUMBUS, OH 43228

Quote No: 57488

3/11/2013

Quote Rev:7 Drawing Rev:4

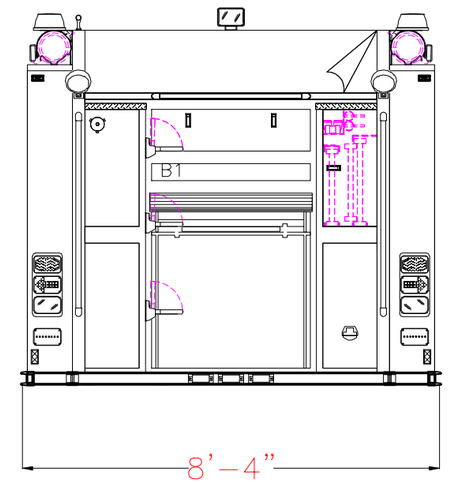

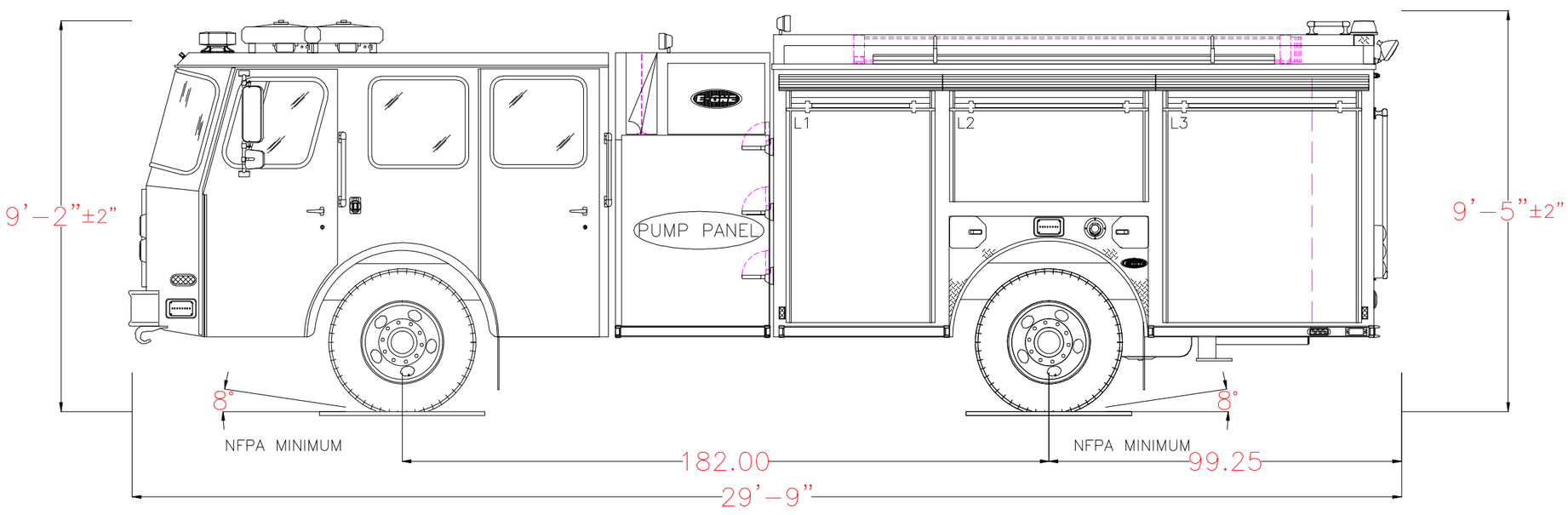

POWERED BY EZDRAW

Notice: This drawing provides a GENERAL REPRESENTATION of the vehicle configuration and should be used for evaluation purposes. The respective dimensions shown,including overall height and length, are estimates and may vary due to manufacturing processes. All other items such as lighting and fixtures, plumbing, compartmentation, and other generally assembled details are shown for REFERENCE ONLY and may not be a direct reflection of the final truck configuration. In ALL situations where this drawing may conflict with the specifications, THE SPECIFICATIONS, AS REFLECTED IN THE APPROVED SHOP ORDER, SHALL PREVAIL. Unless otherwise specified, the proposed apparatus will be manufactured to the latest NFPA recommendations as well as other applicable federally regulated safety regulations. E-One reserves the right to engineer and incorporate design improvements and changes without notice, while adhering to the intent of the specification.

1500 GPM HALE QMAXPUMP 0 TOTAL VOLUME 0 TOTAL FOAM	HOSE LOADS :

	OPENING		INTERIOR DIMENSIONS				
COMPT.	WIDTH	HEIGHT	WIDTH	LOWER HEIGHT	LOWER DEPTH	UPPER HEIGHT	UPPER DEPTH
L1	40	59.75	42	30	26	26.75	26
L2	54	25.75	56	N/A	N/A	26.75	26
L3	54	59.75	56	30	26	26.75	26
R1	40	59.75	42	30	26	26.75	12
R2	54	25.75	56	N/A	N/A	26.75	12
R3	54	59.75	56	30	26	26.75	12
B1	36	45	38	30	26	24	14

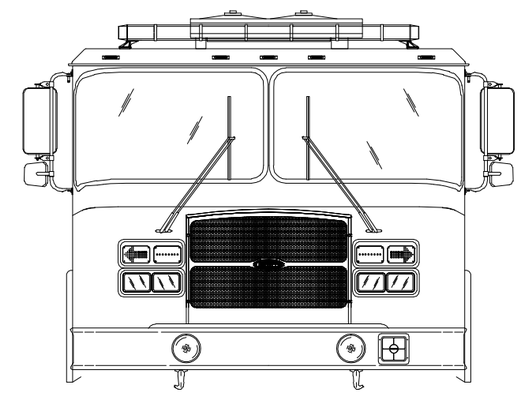

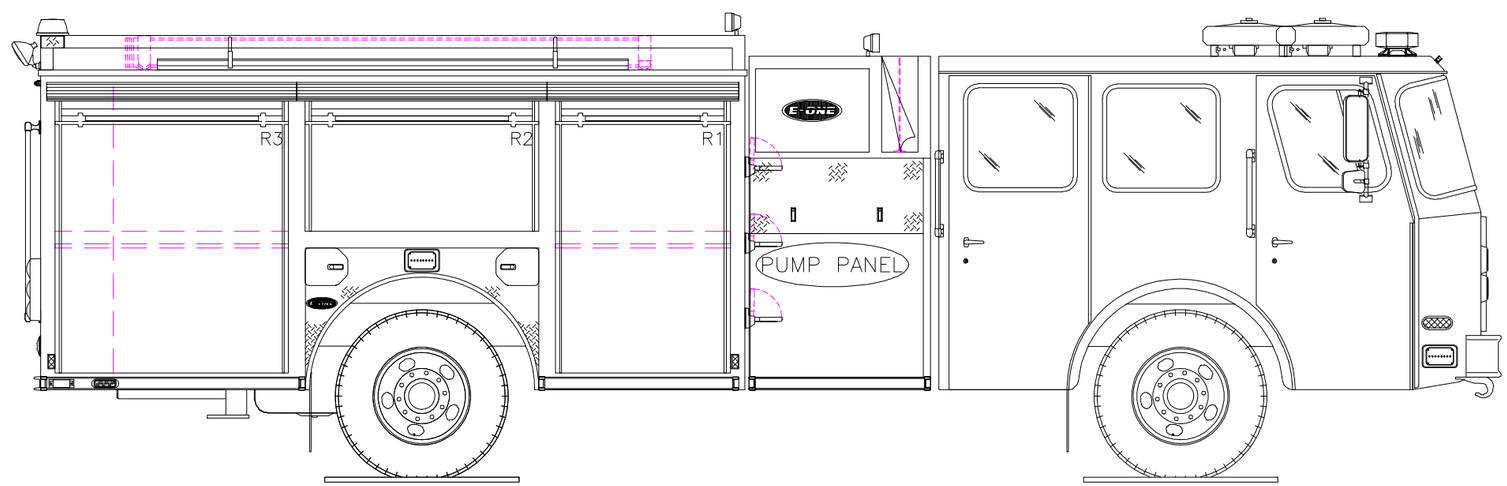

POWERED BY EZDRAW

Fire Apparatus Quotation for:
STATE OF OHIO TERM SCHEDULE

Quotation Number: 57489 Rev: 12

Unit Description: PAEM-TYPH

Quote Description: Rescue Pumper, Aluminum, eMAX, Typhoon Chassis

Salescode	Extended Description	Qty
TESTING COMPLIANCE STANDARD		
1001-0015	The E-ONE supplied components of the vehicle shall meet the requirements of NFPA 1901, 2009 edition.	1
BUMPERS		
1160-0000	Bumper 10" stainless steel.	1
1160-0011	4" Front Bumper Extension.	1
FRAME ASSEMBLY		
1250-0003	Frame 10.25 x 3.5 x .375 chassis.	1
1250-0011	Rear underbody support frame.	1
AXLE OPTIONS		
1025-0004	Meritor FL941 front axle 18,000 lb.	1
1025-0017	Meritor RS-25-160 single rear axle 27,000 lb. capacity.	1
1025-0029	Front shock absorbers.	1
SUSPENSIONS		
1070-0001	Rear suspension springs rated equal to the capacity of the axle.	1
WHEEL OPTIONS		
1050-0000	Steel wheels for front axle (2).	1
1050-0002	Steel wheels for rear axle (4).	1
1050-0007	Front axle wheel trim kit. Includes stainless steel lug nut covers (chrome plated plastic if applicable) and center cap with E-ONE logo. Note: Center cap will have an inspection port IPO a logo if equipped with Stemco oil seals.	1
1050-0008	Rear axle (single) wheel trim kit. Includes stainless steel lug nut covers (chrome plated plastic if applicable) and center cap with E-ONE logo. E-ONE custom chassis	1
WHEEL OPTIONS		
	w/steel wheels will have chrome plated plastic lug covers.	

TIRE OPTIONS		
1060-0001	Two Michelin 315 tires model XZA-1 for front axle.	1
1060-0016	Four Michelin 12R rear tires with XDN2 mud and snow tread.	1
1060-0050	Tire pressure monitoring valve stem caps.	1
BRAKE SYSTEMS		
1100-0000	16-1/2" x 6" S-cam brakes with ArvinMeritor automatic slack adjusters for front axle.	1
1100-0002	ArvinMeritor 16-1/2" x 7" S-cam brakes with cast brake drums for a single rear axle.	1
1100-0005	Brake system air 4X2/4X4.	1
1100-0006	Parking brake release mounted on the driver's side lower dash.	1
AIR SYSTEM OPTIONS		
1110-0000-001	Inlet for air system. Location: driver door jamb.	1
1110-0002	Air dryer Bendix AD-9.	1
1110-0006	Air lines nylon.	1
1110-0041	Air horns Grover recessed in bumper (PR).	1
ENGINES & TRANSMISSIONS		
1200-0017	Push-button transmission shift selector.	1
1200-0020	TransSynd synthetic transmission fluid for EVS3000.	1
1200-0097	Electronically limited speed to 68 MPH maximum. Note: Max speed may be set at 65 MPH due to tire rating.	1
1200-0234	Eng/Trans Cummins ISL 350HP/EVS3000 2013 EPA compliant engine.	1
SECONDARY BRAKING		
1125-0002	Jacobs engine compression brake.	1
COOLING PACKAGE		
1800-0013	Cooling system for use with Cyclone II X, Typhoon X, and Quest chassis. For use with 2010/2013 EPA engines. Includes coolant recovery system.	1
FUEL SYSTEMS		
1350-0005	Fuel system 65 gallons.	1
FUEL SYSTEMS		
1350-0022	Fuel line hose rubber.	1
ALTERNATOR		
1700-0003	Alternator Leece Neville 270 amp SAE, 240 amp NFPA rating.	1
BATTERIES		
1400-0002	Battery four group 31 1000 CCA.	1

CHASSIS OPTIONS		
1680-0005	Thermatic fan clutch.	1
1680-0006	Drivelines 1710.	1
1680-0008	Tow eyes front painted below bumper/cab (PR).	1
1680-0011	Tow eyes rear below body, painted.	1
1680-0250-M58	Diesel Exhaust Fluid (DEF) 5 gallon tank for 2013 EPA engines. Location: left side below rear of cab.	1
CAB MODEL		
1520-0013	Typhoon X medium cab with 58" CA	1
CAB ROOF TYPE		
1615-0007	Delete rear vista roof windows.	1
1615-0010	Cab roof to be "flat" (non-vista).	1
CAB BADGE PACKAGE		
1610-0000	Cab and body to have applicable E-ONE logos.	1
GRILLE		
1620-0004	ABS chrome plated grille.	1
CAB DOOR OPTIONS		
1550-0003	Rear crew cab doors in the medium position.	1
1550-0005	Driver and officer cab door windows. Include forward vent windows.	1
1550-0011	Rear crew cab door windows. Includes manual roll-down actuation. Not available with paddle style door latching.	1
1550-0016	Cab door panels ABS.	1
1550-0025	All cab doors shall have "L" style exterior latches.	1
1550-0027	Front cab door windows to manually roll down.	1
1550-0037-659	(4) Incandescent cab step area lighting. Locate each light in on each cab door in the inboard position. Lights to be switched with door ajar.	1
1550-0044	All cab door kick plates to be made from diamond plate aluminum.	1
1550-0059-000-72	Reflective Yellow/Red printed striping positioned in the "A" formation located in the lower cab door panels.	1
1550-0077	Interior cab door locks - manual. Will be individually actuated from each respective door. Includes barrel style key lock on each exterior cab door.	1
1550-0083	All cab exterior access doors to have CH751 keyed locks.	1
MIRRORS		
1670-0003	Velvac 2010 mirrors. Door mounted west coast style with remote control and heat.	1
MISC EXTERIOR CAB OPTIONS		
1550-0020	Windows cab side fixed driver's side.	1

1550-0033	Windows cab side fixed officer's side.	1
1675-0022	Pair of 18" handrails located just behind driver and officer front door one each side.	1
1675-0023	Pair of 18" handrails located just behind driver and officer rear door (ALS doors if equipped) one each side.	1
1675-0030	Mud flaps, front, black with E-ONE logo.	1
1675-0047	Rear cab wall to be 3/16" aluminum diamond plate.	1
HVAC		
1515-0017	Air conditioning for the Typhoon X, CII X and Quest with Cummins ISC/ISL engine, radiator mounted condenser.	1
1685-0057	Heaters rear with covers (PR), and front heater with heat to the feet for the driver and officer.	1
SEATS		
1510-0003	Seats, Inc. brand 911 cab seats.	1
1510-0007	Seat cover material vinyl.	1
1510-0008	Seat color gray.	1
1510-0035-147	Universal air pack bottle bracket (EA). Location: officer's seat.	1
1510-0035-148	Universal air pack bottle bracket (EA). Location: rear facing driver's side.	1
1510-0035-215	Universal air pack bottle bracket (EA). Location: rear facing officer's side.	1
1510-0038	Driver seat 911 air ride.	1
1510-0042	Officer seat to be 911 fixed SCBA.	1
1510-0050	Rear facing 911 seat with SCBA driver's side.	1
1510-0053	Rear facing 911 seat with SCBA officer's side.	1
1685-0031	Seating capacity tag of four occupants.	1
MISC INTERIOR CAB OPTIONS		
1685-0000	Cab interior gray. Does not include engine cover or seat color.	1
1685-0005	Lexan sun visors, driver and officer's side overhead.	1
1685-0168	ABS Dash package. Includes center and officer side dash, lower kick panels and "A" post covers.	1
1685-0187	Severe duty engine cover, molded polyurethane.	1
CAB ELECTRICAL OPTIONS		
1750-0013-172	Turn signal Whelen 600 LED amber arrow pair located upper headlight bezel.	1
1750-0029	Switch horn button two position DOT/air horn.	1
1750-0046-195	Cab Headlights. Position: lower.	1
1750-0059-179-04	Receptacle inlet 20 amp with a Yellow cover. Location: outside driver's door next to handrail.	1
1750-0072-593	12 VDC (or 24VDC) electrical outlet in the cab wired battery hot. Location: officer side dash.	2
1750-0075	English dominant main cab gauge cluster.	1

1750-0188	DPF regeneration override switch.	1
1750-0198-A31	Battery charger to be located behind driver's seat.	1
1750-0343	Battery charger E-ONE LPC 20. 120 volt inlet, 20 amp output.	1
5400-0037	Dome Lts Red/White Incandescent. Package includes two lights mounted in the front and two mounted in the rear of the cab. White light wire through door and light assembly mounted switch. Red light through light assembly mounted switch.	1
BODY COMPT LEFT SIDE		
3100-0245	Driver side body with full height 60" wide forward and 56" wide rearward compartmentation. Includes (1) 56" wide compartment over the wheel well. Side Mount eMAX only.	1
BODY COMPT RIGHT SIDE		
3120-0403	Officer side body with full height 60" wide forward and 56" wide rearward compartmentation. Includes (1) 56" wide compartment over the wheel well and one (1) storage tunnel located behind the upper (3) compartment back walls.	1
BODY COMPT REAR		
3110-0013	Full Height Rear Compartment with Officer Side Storage Tunnel. Includes smooth plate panels and storage access door with push button latch.	1
3340-0102	Angled (Boston style) style tailboard corners.	1
3340-0319	Bolt-on diamond plate 10" tailboard (full width of body). For use with rear ladder application. Includes handrails- (1) vertically on trailing edge of body opposite side of ladder and handrail(s) horizontally below hosebed.	1
BODY MODULE FRONT		
3125-0005	eMAX Forward body configuration - SM. Includes a lower double preconnect storage area, upper transverse storage area, rack in upper storage area for (2) backboards (vertically stored offset forward - sleeve each side of center pump access), center front pump access doors and removable center floor in upper area.	1
DOORS		
3300-0017-004	Door roll up short (up to 45") with satin finish ROM. Location(s): L2.	1
3300-0017-016	Door roll up short (up to 45") with satin finish ROM. Location(s): R2.	1
3300-0019-003	Door roll up tall (greater than 45") with satin finish ROM. Location(s): L1.	1
3300-0019-005	Door roll up tall (greater than 45") with satin finish ROM. Location(s): L3.	1
3300-0019-015	Door roll up tall (greater than 45") with satin finish ROM. Location(s): R1.	1
3300-0019-017	Door roll up tall (greater than 45") with satin finish ROM. Location(s): R3.	1
3300-0019-027	Door roll up tall (greater than 45") with satin finish ROM. Location(s): B1.	1
SHELVES		
3370-0025-101	Permanent shelf. Locate in R1 at offset (above extrusion if applicable).	1
3370-0025-102	Permanent shelf. Locate in R3 at offset (above extrusion if applicable).	1
3370-0052-003	Adjustable shelf. For non-transverse compartments that are 16" or greater in depth. Location: L1.	1

3370-0052-005	Adjustable shelf. For non-transverse compartments that are 16" or greater in depth. Location: L3.	1
3370-0053-579	Adjustable shelf. For non-transverse compartments that are up to 15.99" deep. Location: B1 upper.	1
3370-0054-003	Tracks for adjustable shelf and/or adjustable tray in compartments 16" or greater in depth. Location: L1.	1
3370-0054-005	Tracks for adjustable shelf and/or adjustable tray in compartments 16" or greater in depth. Location: L3.	1
3370-0055-579	Tracks for adjustable shelf in shallow compartments up to 15.99" deep. Location: B1 upper.	1
COVERS		
3305-0007-000-02	Vinyl Red hose bed cover with attached rear flap(s).	1
3305-0016-000-02	Vinyl Red speedlay side covers.	1
PUMP PANELS		
3134-0006	The single gauge panel on the driver's side of the side mount module is to be hinged downward. Includes two (2) cable hold opens, and latches.	1
3134-0079	The side pump intake / discharge panels to be stainless steel. eMAX only.	1
3134-0080	Pump operator control panel in driver side forward body compartment to be stainless steel. eMAX only.	1
MISC PUMP PANEL OPTIONS		
4460-0003	Pump panel tags color coded per NFPA compliance.	1
4460-0058	Push-pull handles on the pump operator's panel to be oriented vertically. eMAX only.	1
PUMP MODULE OPTIONS		
3136-0058	E-ONE logo mounted one each side on pump module/preconnect panels. Logos to be sized as applicable to available space on panels.	1
3136-0090	Speedlay tray - removable. Tray includes a 1.25" extruded alum handle low on each end of tray and slots down each side to facilitate lifting. The floor of the tray shall have poly slides and be slotted to prevent the accumulation of water and allow for ventilation of wet hose.	2
WATER TANK		
4010-0177	780 Gallon "R" Water Tank. UPF Poly III color fill towers. Note: Any foam cell(s) and/or storage options through the tank will reduce the overall water capacity.	1
TANK PLUMBING		
4450-0010	2" tank fill Akron manual valve.	1
4450-0121	3" Tank To Pump Akron Air Actuated Valve w/4" Plumbing.	1
LADDER STORAGE / RACKS		
3365-0028	Hard Suction Storage Rack. Driver side compartment top. Includes spring hold downs and scuff plates behind spring mounts (as applicable).	1
3365-0035	Hard Suction Storage Rack. Officer side compartment top. Includes spring hold	1

	downs and scuff plates behind spring mounts (as applicable).	
3365-0049	Brand of ladders capable of being carried on unit to be Alco-Lite.	1
3365-0087-C57	The length of ladders capable of being stored shall be the following: 24' 2-section and 14' roof ladder.	1
3365-0149-I32	Storage tunnel capable of holding: (1) 2-section, (1) roof, (1) attic, (2) pike poles in Officer Side Storage Tunnel.	1
HANDRAILS / STEPS		
3110-0099-524	NFPA hose bed access ladder. Zico model RL12 for increased visibility of rear outboard body mounted DOT/NFPA lighting. Includes required step lights and additional hand rail(s) if applicable. Location: rear of body driver side.	1
3330-0073	Step rear intermediate. Locate above B1, includes handrail (in place of horizontal hosebed handrail).	1
3330-0158	Step below side intake / discharge panel (PR). Gator grip diamond plate. Each location requires a minimum of (1) handrail / handhold per NFPA. eMAX only.	1
MISC BODY OPTIONS		
3090-0002	The unit has no overall height restrictions.	1
3090-0004	The unit has no overall length restrictions.	1
3090-0007	The hose bed is to have NFPA capacity.	1
3340-0004	Hosebed above the booster tank. Includes forward hosebed and tower(s) cover plate work (as applicable). Hosebed adjustable divider extrusion rearward of the furthest tower is to run full width of the hosebed (as is practical with other hosebed mounted equipment).	1
3340-0035	Divider Long. To run full length of hose bed (front to rear).	2
3340-0049	Hosebed storage pan. Locate in forward area of hosebed.	1
3340-0058	Recessed fuel fill driver side wheel well.	1
3340-0075	Body mainframe and hosebed side assemblies for a 90" high body.	1
3340-0093	Mud flaps, rear, black with E-ONE logo.	1
3340-0110	The rear of each hose bed divider to have a hand hold cut-out(s).	1
3340-0282-I06	Cab tilt switch and manual jack to be located: R1 low on forward wall.	1
3340-0302	Long hose bed divider(s) to be held short to allow for adjustability of the divider(s) with hose bed preconnect(s).	1
3340-0486	Diamond plate single axle wheel well. Includes bolt-on composite wheel well liners and bolt-on polished alum fenderettes.	1
3340-0494	Rubrail for the body.	1
3340-0586	Storage pan over eMAX transverse storage area(s).	1
SCBA BOTTLE STORAGE		
3320-0019	SCBA Bottle Storage. (7) Fire Shopp SCBA bottle storage with hinged doors with push button latches. (4) officer side and (3) driver side in wheel well area.	1
PUMPS		

4005-0031	Rating 1500 GPM.	1
4005-0131	E-ONE 1250-1500 GPM pump, single stage.	1
PUMP CERTIFICATION		
4475-0000	Pump certification 750-2250 GPM	1
PUMP OPTIONS		
4015-0007	Pump cooler, 1/4" valve with 3/8" tubing.	1
4015-0053-198	Steamers to be Flush + 1". Location: driver's side.	1
4015-0053-199	Steamers to be Flush + 1". Location: officer's side.	1
4015-0098	Manually operated master pump drain. The master drain shall be clearly marked and placed in accessible location on pump panel.	1
4015-0133	Anode for Darley pump - (1) intake side.	1
INTAKES		
4440-0005	2.5" Left Intake Akron Manual Valve.	1
INTAKE OPTIONS		
4445-0048	Intake pressure relief valve, Task Force Tips.	1
DISCHARGES AND PRECONNECTS		
4415-0018	2.5" left front hose bed discharge Akron manual valve.	1
4415-0034-583	3" Right Pump Panel Discharge Akron Manual Valve (Waterous pumps noted location to be forward lower port). Location: right side discharge 1.	1
4415-0041	3" Deck Gun Discharge, Akron manual valve.	1
4415-0065	1.5" Double Speedlay with Akron Manual Valves.	1
4415-0161-581	2.5" Left Panel Discharge Akron Manual Valve w/30 Degree Droop. Location: left side discharge 1.	1
4415-0161-582	2.5" Left Panel Discharge Akron Manual Valve w/30 Degree Droop. Location: left side discharge 2.	1
4415-0164-584	2.5" Right Panel Discharge Akron Manual Valve w/30 Degree Droop. Location: right side discharge 2.	1
4417-0106-685	Deck gun piping to be positioned driver side of hose bed storage pan.	1
DISCHARGE OPTIONS		
4417-0089-356	Lift lever quarter turn bleeder valve. Plumbed for use with: deck gun.	1
4417-0089-357	Lift lever quarter turn bleeder valve. Plumbed for use with: driver's side hose bed preconnect.	1
4417-0089-574	Lift lever quarter turn bleeder valve. Plumbed for use with: speedlay preconnect.	2
4417-0089-575	Lift lever quarter turn bleeder valve. Plumbed for use with: left discharge.	2
4417-0089-576	Lift lever quarter turn bleeder valve. Plumbed for use with: right discharge.	2
PRESSURE GOVERNORS		
4465-0011	Class 1 TPG pressure governor. Includes, water, oil, volt and tachometer.	1

GAUGES		
4435-0001	Class 1 Intelli-Tank water tank level gauge.	1
4435-0092-354	2.5" Class 1 compound pressure gauge (30-0-400). Discharge: 1.5 in. speedlay preconnect.	2
4435-0092-356	2.5" Class 1 compound pressure gauge (30-0-400). Discharge: deck gun.	1
4435-0092-357	2.5" Class 1 compound pressure gauge (30-0-400). Discharge: driver's side hose bed preconnect.	1
4435-0092-581	2.5" Class 1 compound pressure gauge (30-0-400). Discharge: left side discharge 1.	1
4435-0092-582	2.5" Class 1 compound pressure gauge (30-0-400). Discharge: left side discharge 2.	1
4435-0092-583	2.5" Class 1 compound pressure gauge (30-0-400). Discharge: right side discharge 1.	1
4435-0092-584	2.5" Class 1 compound pressure gauge (30-0-400). Discharge: right side discharge 2.	1
4435-0094	Class 1 4-1/2" compound pressure gauge (30-0-400 PSI).	2
ELECTRICAL SYSTEMS		
5010-0013-E91	Vehicle data recorder - 2009 NFPA compliant. Includes occupant detection with display. Display location: Driver side of center dash electrical cover.	1
5010-0036	V-MUX Electrical system for pumper / tanker / rescue.	1
5010-0059-339	VFD Text display for V-MUX electrical system. Location: center of dash.	1
LIGHT BARS		
5300-0055	Light bar Whelen Freedom model FN72QLED 72" LED with MKEZ7 mounts and clear lenses. Location: Centered on the front cab roof.	1
WARNING LIGHT PACKAGES		
5550-0059-535	Whelen Super LED lower level warning light package. Includes (8) red 600 LED light heads and (2) red 500 LED light heads w/chrome flanges. Locate side facing lights: at forward most position, centered in rear wheel well, and side facing at rear of body in rubrail if equipped.	1
WARNING LIGHTS		
5600-0078-479-06	Whelen Super LED beacon (PR) model L31H with Red domes. Location rear upper body on aerial style brackets.	1
5600-0105-170	Hazard (door ajar) light 2" LED. Location: center overhead.	1
SIRENS		
5500-0015	Whelen model 295SLSA1 siren with microphone (replaced 295HFSA1).	1
5500-0024-170	The electronic siren control is to be located on the center overhead.	1
SPEAKERS		
5510-0018-209	Whelen SA122FMP electronic siren speaker recessed in front bumper. Location: driver side front bumper.	1

DOT LIGHTING		
5150-0008	Whelen 600 series LED vertical mount tail lights. Includes LED stop/tail, arrow turn and halogen back-up lights with vertical Cast 4 housing and weatherproof connectors.	1
5150-0017	License plate light LED with chrome housing located at the rear of the body.	1
5150-0025	Marker light LED body/cab package. E-One custom cab and pumper or tanker body only.	1
LIGHTS - COMPARTMENT, STEP & GROUND		
5380-0144	Compartment light package Amdor Luma-Bar LED for medium bodies. Includes two lights per compartment (four if transverse).	1
5380-0182	Ground light package EON LED - large.	1
LIGHTS - DECK AND SCENE		
5390-0003	Hose bed light Truck-Lite. Locate at the front area of the hose bed. Switched with work light switch in cab.	1
5390-0007	Deck/scene light circuit wiring through chassis reverse. Requires rear deck or scene light.	1
5390-0048-396	Whelen 600 series gradient Super LED scene lights (PR) with weatherproof connectors. Switch in cab (driver and officer side lights switched separately). Locate (1) each side rear compartment face up high.	1
LIGHTS - NON-WARNING		
5400-0003	Engine compartment light (EA).	1
5400-0010	Incandescent pump compartment light (EA).	1
5400-0039	Spotlight Specialty 2150 hand held located on officer's side of cab dash - hardwired.	1
5400-0137	Pump panel LED light package for side mount eMAX. Includes (6) Tecniq EON lights with S/S housings, located (3) each side above lower side intake / discharge panels. Includes S/S light shields. SM eMAX only.	1
CONTROLS / SWITCHES		
5100-0000-199	Foot switch to control air horns located officer's side.	1
5100-0007-198	Foot switch to control electronic siren located driver's side.	1
MISC ELECTRICAL		
5110-0017	Back-up alarm 97 dB.	1
HAND TOOLS		
7600-0005	Pike Pole Fiberglass 6'.	1
7600-0007	Pike Pole Fiberglass 10'.	1
HOSE / NOZZLES		
7700-0004	Hard suction hose 6" with Pyrolite couplings.	2
GROUND LADDERS		

7800-0007	Alco-Lite PRL-14' roof ladder.	1
7800-0016	Alco-Lite PEL-24' 2-section extension ladder.	1
7800-0032	Alco-Lite FL-10, 10' folding ladder w/safety shoes.	1
MISC LOOSE EQUIPMENT		
7900-0010	Chrome Barrel Strainer 6" NST.	1
7900-0014	DOT Required Drive Away Kit - Kit includes three (3) triangular warning reflectors with carrying case. This kit is for the end user and is to remain with the truck.	1
EXTERIOR PAINT		
8100-0063	Cab paint break - standard. Break is 31.5" below the drip rail on Typhoon X and CII X cabs. Pre-07' emission Typhoon cab break is 33.5" below the drip rail. Quest std paint break is 41.375" up from bottom of cab.	1
8100-0116	Rear body surface to have a sanded finish (not painted job color). Includes hinged doors that do not have discrete sales codes and removable panels.	1
8100-0176-000-17	Paint E-ONE chassis cab - Sikkens paint. Color: FLNA3225E-1 Red.	1
8100-0177-000-18	Paint cab Sikkens two-tone. Upper area of cab to be painted FLNA4006 White.	1
8100-0182-000-17	Paint Body - Small - For Pumpers, Rear Mounts, S/A Tankers/Wetsides and Rescues. Sikkens paint. Color: FLNA3225E-1 Red.	1
8100-0186-000-39	Paint exterior surface of outer steel wheels. Sikkens paint. Color: Job Color.	1
INTERIOR PAINT		
8150-0011	The interior of the cab to be painted Zolatone gray.	1
STRIPING		
8300-0003-334-12	NFPA Scotchlite Stripe - 6" wide and straight on front/sides of cab and sides/rear of body. Color: White. Location: bottom of stripe flush with top of bumper and straight back.	1
8300-0042	White rubrail scotchlite insert.	1
8300-0084-000-72	Chevron "A" style 6" printed sheet Scotchlite striping on rear of body. Includes rear facing extrusions, panels and doors inboard/outboard of the beavertails (if applicable). Colors to be Yellow/Red.	1
8300-0093-000-72	Chevron "A" style 6" printed sheet Scotchlite striping on front bumper. Colors to be Yellow/Red.	1
WARRANTY / STANDARD & EXTENDED		
9100-0000	Standard 1 Year Warranty.	1
9100-0003	Lifetime Frame Warranty.	1
9100-0004	10 Year/100,000 Mile Structural Warranty - Statement of Warranty.	1
9100-0005	10 Year Stainless Steel Plumbing Warranty - Statement of Warranty.	1
9100-0019	10 Year Limited Paint and Perforation Warranty - For Sikkens Paint.	1
SUPPORT, DELIVERY, INSPECTIONS AND MANUALS		
9300-0009	Manuals, Operator and Service CD-ROM.	1

9300-0016	Approval Drawings-Standard.	1	
PRICE	2013 E-ONE EMAX RESCUE PUMPER - TYPHOON CUSTOM CHASSIS		$339,246.

STATE OF OHIO TERM SCHEDULE

4200 SURFACE RD
COLUMBUS, OH 43228

Quote No: 57489

3/11/2013

Quote Rev:12 Drawing Rev:4

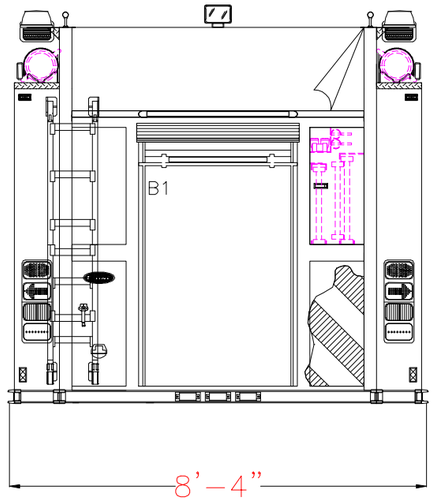

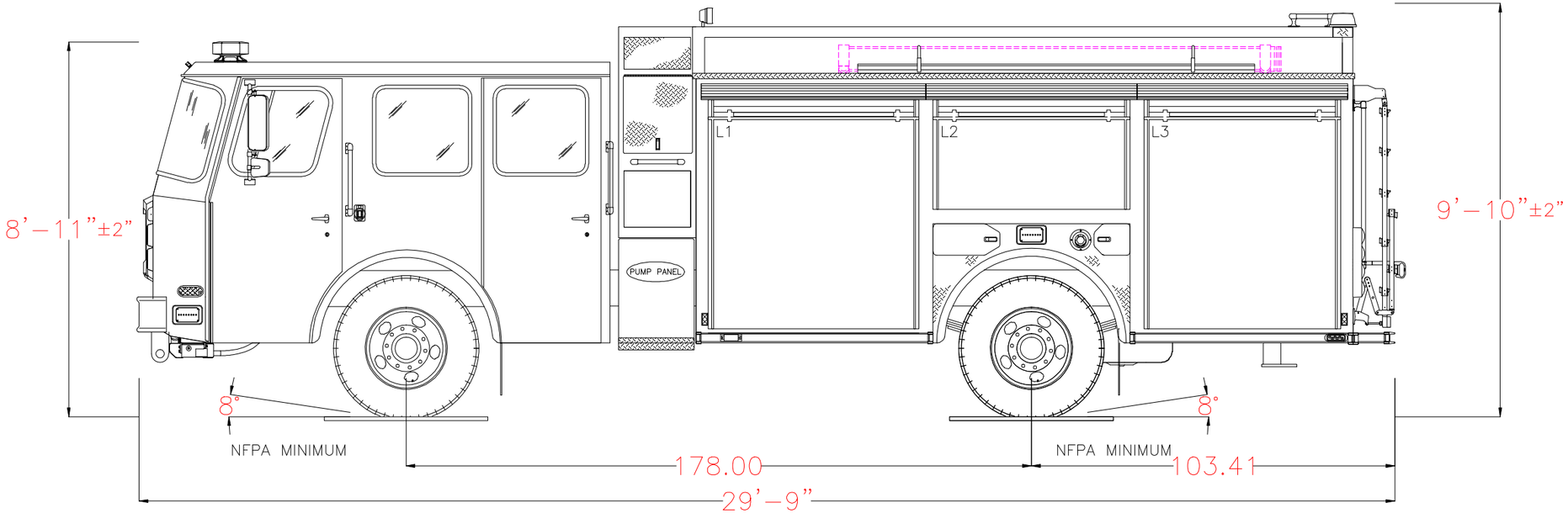

POWERED BY EZDRAW

Notice: This drawing provides a GENERAL REPRESENTATION of the vehicle configuration and should be used for evaluation purposes. The respective dimensions shown,including overall height and length, are estimates and may vary due to manufacturing processes. All other items such as lighting and fixtures, plumbing, compartmentation, and other generally assembled details are shown for REFERENCE ONLY and may not be a direct reflection of the final truck configuration. In ALL situations where this drawing may conflict with the specifications, THE SPECIFICATIONS, AS REFLECTED IN THE APPROVED SHOP ORDER, SHALL PREVAIL. Unless otherwise specified, the proposed apparatus will be manufactured to the latest NFPA recommendations as well as other applicable federally regulated safety regulations. E-One reserves the right to engineer and incorporate design improvements and changes without notice, while adhering to the intent of the specification.

1500 GPM PUMP 0 TOTAL VOLUME 0 TOTAL FOAM	HOSE LOADS :

	OPENING		INTERIOR DIMENSIONS				
COMPT.	WIDTH	HEIGHT	WIDTH	LOWER HEIGHT	LOWER DEPTH	UPPER HEIGHT	UPPER DEPTH
L1	58	59.75	60	30	26	26.75	26
L2	54	25.75	56	N/A	N/A	26.75	26
L3	54	59.75	56	30	26	26.75	26
R1	58	59.75	60	30	26	26.75	12
R2	54	25.75	56	N/A	N/A	26.75	12
R3	54	59.75	56	30	26	26.75	12
B1	36	45	38	30	26	N/A	N/A

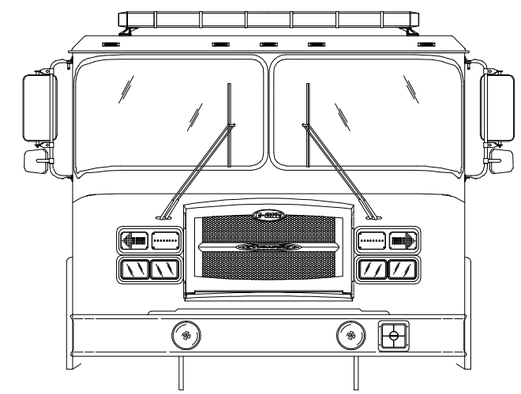

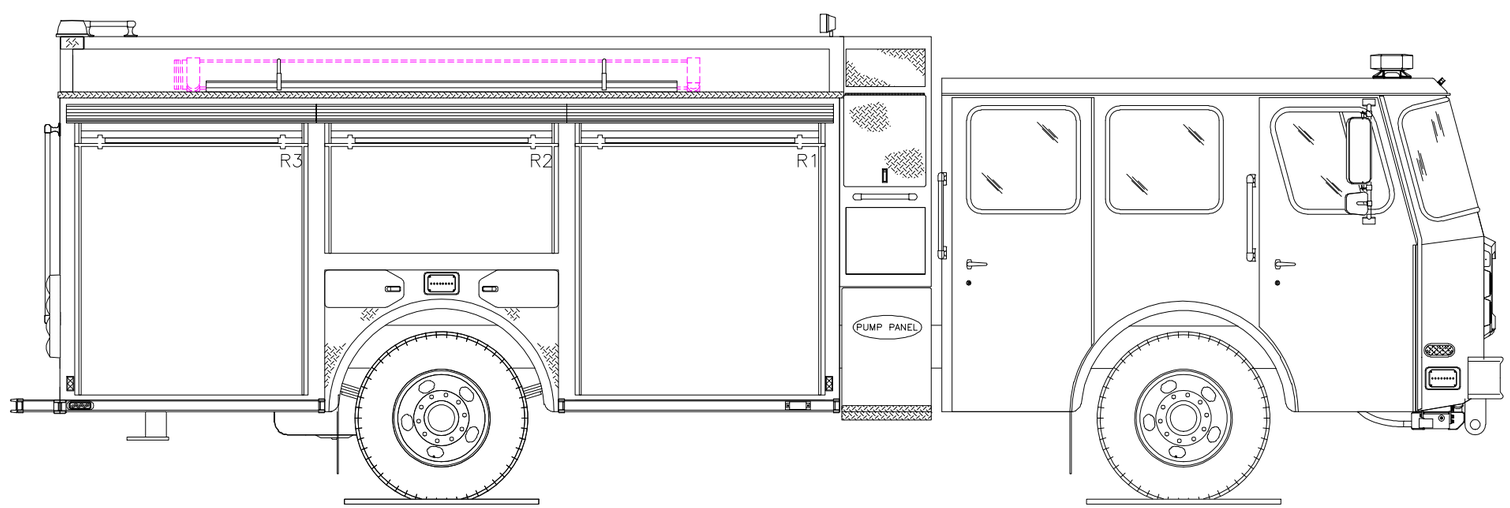

POWERED BY EZDRAW

1000	Chassis	
1025-0003	Meritor FL941 front axle 16,000lb	$10,643
1025-0004	Meritor FL941 front axle 18,000 lb.	$10,643
1025-0005	Meritor FL941 front axle 18,700 lb.	$15,961
1025-0006	Meritor FL941 front axle 20,000 lbs.	$16,538
1025-0007	Meritor FL941 front axle 21,000lb	$16,538
1025-0008	Meritor FL941 front axle 21,500lb	$16,770
1025-0009	Meritor FL943 front axle 18,000 lbs.	$12,954
1025-0010	Meritor FL943 front axle 18,700 lb.	$16,770
1025-0011	Meritor FL943 front axle 20,000 lb.	$17,464
1025-0012	Meritor FL-943 front axle 21,000 lb.	$17,694
1025-0013	Meritor FL943 front axle 21,500 lbs.	$18,041
1025-0014	Meritor front drive axle and suspension 16,540#	$11,797
1025-0015	Meritor front drive axle and suspension 18,000#	$35,208
1025-0016	Meritor RS-24-160 single rear axle 24,000 lb. capacity.	$10,643
1025-0017	Meritor RS-25-160 single rear axle 27,000 lb. capacity.	$11,914
1025-0018	Meritor RS-30-185 single rear axle 31,000 lb. capacity.	$13,302
1025-0019	Meritor RT-40-145 rear tandem axle 40,000 lb. capacity.	$24,285
1025-0020	Meritor RT-46-160 rear tandem axle 46,000 lb. capacity.	$28,333
1025-0021	Meritor RT-46-160 rear tandem axle 48,000 lb. capacity.	$28,333
1025-0022	Meritor RT-50-160 rear tandem axle 52,000 lb. capacity.	$35,850
1025-0023	Meritor RT-50-160 rear tandem axle 54,000 lb. capacity.	$35,850
1025-0027	Driver controlled rear differential.	$759
1025-0028	Koni shock absorbers for front axle - adjustable.	$329
1025-0029	Front shock absorbers.	$177
1025-0030	Stemco oil seal front axle. Chicago Rawhide seal with Stemco sight glass will be supplied when front disc brakes are selected.	$107
1025-0031	Spiral pins front suspension.	$1,648
1025-0034	Automatic traction control. In addition to standard ABS system.	$569
1025-0035	Koni shock absorbers for rear axle.	$523
1025-0036	Automatic Traction Control System 6x4/6x6	$1,941
1025-0058	Stemco oil seal rear axle (per axle). Not available with disc brakes.	$227
1025-0059	Meritor front drive axle and suspension 21,000#	$35,425
1025-0060	Meritor FL943 front axle 22,100lb	$18,719
1025-0063	Control in cab for kneeling of rear air ride suspension. Estimated dump time will be 30 seconds. Switch on dash to "Kneel" rear wire through park brake valve to allow Kneel only when park brake is activated.	$494
1025-0064	Independent front axle/suspension - 18,000 lb.	$40,695
1025-0065	Independent front axle/suspension - 20,000 lb.	$40,695
1025-0066	Independent front axle/suspension - 22,800 lb.	$40,695
1025-0074	Independent front axle/suspension rated at 18,700 lb due to tires (Uses 20,000 lb springs).	$40,695
1025-0075	Independent front axle/suspension rated at 21,000 lb due to tires (Uses 22,800 lb springs).	$40,695
1025-0076	Independent front axle/suspension rated at 21,500 lb due to tires (Uses 22,800 lb springs).	$40,695
1025-0078	S-Cam brakes to have Haldex brand slack adjusters (per axle).	$300
1025-0079	Meritor RS-23-240 two speed single rear axle 24,000lb capacity.	$14,978
1025-0086	Meritor FL941 front axle 18,500lb.	$15,961
1025-0088	Synthetic 75w90 gear oil for rear axle.	$361
1025-0089	Meritor RS-26-185 single rear axle 27,000lb capacity	$13,302
1025-0095	Meritor RS-30-185 single rear axle 29,000lb capacity	$13,302
1025-0097	Meritor RS-30-185 single rear axle 33,000 lb. capacity. Requires 16.5" x 8.625" cast shoe brakes and 33K suspension.	$13,302
1025-0107	Synthetic 75w90 gear oil for front axle.	$111
1025-0108	Meritor RS-30-185 single rear axle 30,000lb capacity	$13,302
1025-0114	Meritor FL943 front axle 18,700lb with multi-leaf front springs.	$17,163
1025-0119	3 year extended parts and labor warranty (total of 4 year warranty) on Timoney Independant Front Axle. Does not include steering components.	$2,392
1025-0120	Driver controlled rear differential. Includes guarded toggle switch located on driver side diagnostic panel.	$759
1025-0121	2 year extended parts and labor warranty (total of 3 year warranty) on Timoney Independent Suspension Front Axle. Does not include steering components.	$1,596
1025-0125	Meritor FL943 front axle 19,840 lb.	$16,770
1025-0127	Meritor FL941 front axle 18,000 lb with multi-leaf front springs.	$11,028
1025-0132	Koni shock absorbers for front axle - non-adjustable. For use with IFS front axle only.	$329
1025-0133	Meritor FL943 front axle 20,000 lb with multi-leaf front springs.	$17,850

1025-0134	Meritor MT-40-14X rear tandem axle 40,000 lb. capacity.	$24,285
1025-0137	Meritor FL943 front axle 19,220 lb.	$16,770
1025-0140	Spicer 232S4 single rear axle 24,000 lb. capacity with power divider. Includes drivelines to front axle.	$15,938
1025-0141	Spicer 301S4 single rear axle 31,000 lb. capacity with power divider. Includes drivelines to front axle.	$20,115
1050-0000	Steel wheels for front axle (2).	$311
1050-0001	Alcoa aluminum wheels for front axle (2).	$1,682
1050-0002	Steel wheels for rear axle (4).	$618
1050-0003	Alcoa aluminum wheels for rear axle (4).	$3,359
1050-0004	Steel wheels for rear axles (8).	$1,233
1050-0005	Alcoa aluminum wheels for rear axles (8).	$6,713
1050-0007	Front axle wheel trim kit. Includes stainless steel lug nut covers (chrome plated plastic if applicable) and center cap with E-ONE logo. Note: Center cap will have an inspection port IPO a logo if equipped with Stemco oil seals.	$225
1050-0008	Rear axle (single) wheel trim kit. Includes stainless steel lug nut covers (chrome plated plastic if applicable) and center cap with E-ONE logo. E-ONE custom chassis w/steel wheels will have chrome plated plastic lug covers.	$276
1050-0009	Rear axle (tandem) wheel trim kit. Includes stainless steel lug nut covers (chrome plated plastic if applicable) and center caps with E-ONE logo. E-ONE custom chassis w/steel wheels will have chrome plated plastic lug covers.	$618
1050-0017	Each inside wheel of the single rear axle shall have valve stem extensions.	$113
1050-0018	Each inside wheel of the tandem rear axles shall have valve stem extensions.	$223
1050-0019	Two steel wheels painted job color on both the inside and outside facing for front axle.	$598
1050-0026	Front axle Wheel Trim kit. Includes stainless steel lug nut covers and center cap (no logo). Note: Center cap will have an inspection port if equipped with Stemco oil seals.	$225
1050-0027	Rear axle (single) wheel trim kit. Includes stainless steel lug nut covers (chrome plated plastic if applicable) and center caps (no logo). E-ONE custom chassis w/ steel wheels will have chrome plated plastic lug covers.	$276
1050-0028	Rear axle (tandem) Wheel Trim kit. Includes stainless steel lug nut covers (chrome plated plastic if applicable) and center cap (No logo). E-ONE custom chassis w/ steel wheels will have chrome plated plastic lug covers.	$618
1050-0030	Rear axle (single) wheel trim kit. Includes stainless steel lug nut covers and center caps (no logo). E-ONE custom chassis w/ steel wheels will have chrome plated plastic lug covers.	$276
1050-0031	Front axle wheel simulator kit. Includes stainless steel wheel simulator and center cap with E-ONE logo. Note: Center cap will have an inspection port IPO a logo if equipped with Stemco oil seals.	$541
1050-0032	Rear axle (single) wheel simulator kit. Includes full stainless steel wheel simulators with integrated lug nut covers and E-ONE logo.	$789
1050-0033	Dura-Brite finish on aluminum wheel (EA). Not available on 13" wheel (425 or 445 tires).	$102
1050-0039	Polish inner and outer aluminum wheel (EA).	$83
1050-0040	Tyron wheel safety bands (PR). Location: [#LOC].	$829
1050-0042	Two heavy duty steel wheels for front axle. For use with 21.5K and greater ratings only.	$1,588
1050-0043	Rear axle (tandem) wheel simulator kit. Includes full stainless steel wheel simulators with integrated lug nut covers and E-ONE logo.	$1,576
1050-0044	Accuride aluminum wheels for front axle (2).	$1,633
1050-0045	Accuride aluminum wheels for rear axle (4).	$3,260
1050-0046	Accuride aluminum wheels for rear axles (8).	$6,517
1050-0047	Front axle wheel trim kit. Includes stainless steel "Cover-Up" covers with E-ONE logo. Not available with Stemco oil seals.	$290
1050-0048	Rear axle (single) Wheel Trim kit. Includes stainless steel "Cover-Up" covers with E-ONE logo. Not available with Stemco oil seals.	$370
1050-0049	Rear axle (tandem) Wheel Trim kit. Includes stainless steel "Cover-Up" covers with E-ONE logo.	$741
1050-0054	Crossfire dual wheel air tire equalizing system.	$295
1050-0069	Isolators between wheels and/or hubs.	$194
1050-0070	Accuride aluminum wheels outer and steel inner for rear axles (4).	$1,939
1050-0071	Wheel check loose lug nut indicators (standard temperature lime green) for 4x2/4x4 chassis. Front and rear wheels.	$133
1060-0001	Two Michelin 315 tires model XZA-1 for front axle.	$1,358
1060-0004	Four Michelin 11R tires model XZE2 highway tread for rear axle.	$2,200
1060-0005	Four Michelin 12R tires model XZE highway tread for rear axle.	$2,546
1060-0006	Four Michelin 315 tires model XZA-1 for rear axle	$2,596
1060-0007	Eight Michelin 11R tires model XZE2 for rear axles.	$3,703
1060-0008	Eight Michelin 12R tires model XZE for rear axles	$4,397
1060-0010	Two Goodyear 315 tires for front axle	$1,598
1060-0011	Two Goodyear 385 tires for front axle	$1,766
1060-0012	Two Goodyear 425 tires for front axle	$1,930
1060-0015	Four Michelin 11R rear tires with XDN2 mud and snow tread.	$2,664
1060-0016	Four Michelin 12R rear tires with XDN2 mud and snow tread.	$3,010
1060-0017	Four Michelin 315 rear tires with XDN2 mud and snow tread.	$3,056

1060-0018	Four Goodyear 11R rear tires with Mud and Snow tread	$3,010
1060-0019	Four Goodyear 12R rear tires with Mud and Snow tread	$3,357
1060-0020	Four Goodyear 315 rear tires with mud and snow tread. Intermittent fire service rating if GAWR is over 29,560.	$3,531
1060-0021	Eight Michelin 11R rear tires with XDN2 mud and snow tread.	$5,323
1060-0022	Eight Michelin 12R rear tires with XDN2 mud and snow tread.	$6,015
1060-0023	Eight Michelin 315 rear tires with Mud and Snow tread	$6,109
1060-0024	Eight Goodyear 11R rear tires with Mud and Snow tread	$6,015
1060-0025	Eight Goodyear 12R rear tires with Mud and Snow tread	$6,710
1060-0030	Four Goodyear 315 rear tires with G291 highway tread.	$3,241
1060-0037	Spare tire Michelin 24R21 each.	$2,584
1060-0042	Two Michelin 365 tires model XZA for front axle. Speed rating for up to 75 mph. Requires alum wheels.	$1,336
1060-0043	Two Michelin 425 tires model XZY3 for front axle.	$1,633
1060-0044	Two Michelin 445 tires model XZY3 for front axle.	$1,615
1060-0045	Two Michelin 445 tires model XFE for front axle.	$1,796
1060-0046	Two Michelin 425 tires model XFE for front axle.	$1,523
1060-0047	Two Michelin 385 tires model XFE for front axle.	$1,403
1060-0049	Tyron tire pressure monitoring system model TPMS. Includes wireless remote display in cab.	$1,069
1060-0050	Tire pressure monitoring valve stem caps.	$155
1060-0051	Two Michelin 385 tires model XZY3 for front axle.	$1,512
1060-0053	PressurePro tire pressure monitoring system for single rear axle units. Includes bail mounted display in cab.	$910
1060-0054	PressurePro tire pressure monitoring system for tandem rear axle units. Includes bail mounted display in cab.	$1,088
1060-0060	Two Michelin 315 tires model XZY3 for front axle.	$1,079
1060-0061	Four Michelin 12R rear tires with Mud and Snow XDS tread	$3,010
1060-0072	Two Goodyear 385 tires for front axle.	$1,766
1060-0073	Two Goodyear 425 tires for front axle.	$1,930
1060-0075	Four Goodyear 11R rear tires with mud and snow tread.	$3,010
1060-0076	Four Goodyear 12R rear tires with mud and snow tread.	$3,357
1060-0077	Eight Goodyear 11R rear tires with Mud and Snow tread	$6,015
1060-0078	Eight Goodyear 12R rear tires with Mud and Snow tread	$6,710
1060-0079	Four Goodyear 11R rear tires with highway tread	$2,546
1060-0081	PressurePro tire pressure monitoring system for single rear axle units. Includes electrical system integrated display in cab.	$910
1060-0085	Eight Michelin 12R rear tires with Mud and Snow XDS tread	$6,015
1060-0086	Four Goodyear 11R rear tires with G287 MSA highway tread	$2,546
1060-0087	Two Goodyear 315 tires with G287 MSA tread for front axle	$1,598
1060-0094	Cat's Eye model 6120-AB00 single rear axle tire pressure monitoring system. For use on 120 PSI tires. Includes braided lines.	$760
1060-0096	Tire balancing (EA). Location: front tires.	$60
1060-0097	Eight Michelin 315 tires model XZU-S2 for rear axles	$7,606
1060-0098	Two Bridgestone 315 tires model M860 for front axle.	$2,333
1060-0099	Four Bridgestone 12R tires model R250F highway tread for rear axle.	$3,813
1060-0101	Tire pressure monitoring integrated with V-MUX multiplex electrical system. Requires Vista display and D-TEK. For use with single rear axle units.	$601
1060-0102	Tire pressure monitoring integrated with V-MUX multiplex electrical system. Requires Vista display and D-TEK. For use with tandem rear axle units.	$1,037
1060-0103	Cat's Eye model 6130-AB00 single rear axle tire pressure monitoring system. For use on 130 PSI tires. Includes braided lines.	$760
1060-0104	Four Goodyear 12R rear tires with G661 HSA highway tread.	$3,010
1060-0106	Four Goodyear 11R rear tires with G661 HSA highway tread.	$2,546
1070-0001	Rear suspension springs rated equal to the capacity of the axle.	$1,275
1070-0003	Rear suspension air ride rated equal to the capacity of the axle.	$5,180
1070-0004	Rear suspension air ride (40-46K) rated equal to the capacity of the axles.	$9,031
1070-0005	Air ride cab.	$2,664
1070-0007	Shock absorbers rear single axle. Not available on 31,000 lb.	$177
1070-0012	Reyco rear suspension springs rated equal to the capacity of the axle.	$1,275
1070-0013	Rear suspension air ride (48-54K) rated equal to the capacity of the axles.	$10,581
1070-0017	Reyco rear spring suspension w/aux 33K rating.	$1,913
1070-0019	Rear suspension springs rated at 27,000 lbs.	$1,487
1070-0020	Rear axle u-bolts .875". 24K/27K rear axles only. Not available with air ride suspensions.	$99
1070-0022	Rear suspension FIREMAAX EX model FMX-482 air ride rated equal to the capacity of the axles (40-48K). Requires TB modification on 4-jack aerials. (Raises OAH .5" over springs)	$9,682
1070-0024	Lower leaf wrap. Single rear axle only.	$509
1070-0027	Rear suspension FIREMAAX EX model FMX-272 27,000 lb. single axle air ride.	$5,568
1070-0028	Rear suspension FIREMAAX EX model FMX-242 24,000 lb. single axle air ride.	$5,143

1070-0029	Rear suspension FIREMAAX EX model FMX-312 31,000 lb. single axle air ride. Requires aluminum wheels.	$7,292
1100-0000	16-1/2'' x 6'' S-cam brakes with ArvinMeritor automatic slack adjusters for front axle.	$291
1100-0001	Meritor EX225H 17" disc brakes for front axle.	$1,137
1100-0002	ArvinMeritor 16-1/2'' x 7'' S-cam brakes with cast brake drums for a single rear axle.	$291
1100-0003	Meritor EX225H 17" disc brakes for rear axle, maximum capacity 27,000 lbs.	$1,137
1100-0004	Meritor EX225H 17" disc brakes for rear axles, maximum capacity 54,000 lbs.	$1,738
1100-0005	Brake system air 4X2/4X4.	$7,695
1100-0007	Parking brake release mounted center of the engine cover.	$295
1100-0008	Brake system air 6X4.	$7,971
1100-0009	Front axle parking brake.	$486
1100-0010	Brake emergency release for spring.	$885
1100-0011	Roll Stability Control, Includes ATC. Not available on commercial chassis, tiller or tandem axle custom chassis.	$1,841
1100-0014	ArvinMeritor 16-1/2'' x 7'' S-cam brakes with cast brake drums for a tandem rear axle.	$351
1100-0018	Dust Shields. Front and Rear Axle. CAM Brakes only.	$338
1100-0019	Dust Shields. Rear Axle. CAM Brakes only.	$206
1100-0020	Compression fittings for all air brake system lines. Includes cab interior air lines as applicable.	$1,138
1100-0023	Stainless steel park brake release guard.	$197
1100-0024	G4 Electronic Stability Control (4x2), Includes RSC and ATC. Not available on 4x4, commercial chassis or tiller.	$3,238
1100-0025	ArvinMeritor 16-1/2'' x 8.625'' Q-Plus S-cam brakes with cast brake drums for a single rear axle. 24K axle only.	$1,199
1100-0026	G4 Electronic Stability Control (6x4), Includes RSC and ATC. Not available on 6x6 or commercial chassis.	$3,862
1100-0027	Knorr-Bremse 17" disc brakes for front axle. IFS only.	$1,137
1100-0030	Brake chambers 30-36 for 24,000# single rear axle. N/A with disc brakes.	$505
1100-0032	Hinged stainless steel park brake release guard.	$263
1100-0035	Glad Hands tow option. Location: Front chassis frame.	$496
1100-0036	16.5'' x 8.625'' P-Cast S-cam brakes for 27,000 - 33,000 Meritor axle.	$745
1100-0037	Glad Hands tow option. Location: rear chassis frame.	$496
1100-0040	Gauge air brake application additional. Location: officer side overhead console.	$282
1100-0043	Emergency park brake activation valve mounted on the officer's side dash with stainless steel guard.	$616
1100-0045	2nd parking brake release mounted on the officer's side electrical access cover (side facing) with stainless steel guard. Severe duty interior only.	$826
1110-0000	Inlet for air system. Location: [#LOC].	$344
1110-0001	Air inlet auto eject. Includes weatherproof gasketed cover. [#LOC].	$443
1110-0002	Air dryer Bendix AD-9.	$448
1110-0003	Air dryer System Saver 1200.	$541
1110-0004	Air tank drains w/pull cords.	$393
1110-0005	Automatic moisture ejectors, heated.	$390
1110-0007	Air lines braided.	$2,096
1110-0008	Gauge air brake application mounted in cab	$282
1110-0011	Air intake restriction gauge.	$240
1110-0012	Air outlet off front ACC tank. It shall be located [#LOC].	$344
1110-0013	Air horns shut-off valve. Located in cab accessible by driver.	$101
1110-0025	Thomas 110 volt air compressor plumbed to air brake system.	$1,079
1110-0026	Air horns recessed in bumper (PR).	$765
1110-0027	Isolated air tank. Includes pressure protection valve.	$520
1110-0029	Diamond plate flip cover for air inlet or outlet with label attached with rivets mounted in driver's door jamb.	$106
1110-0040	Dump valve system for rear air ride suspension. Includes three valves, one on each bag and one on supply line. Switch from driver's side overhead console.	$594
1110-0041	Air horns Grover recessed in bumper (PR).	$932
1110-0042	Label on isolated air tank "Air Horns Only".	$29
1110-0044	Air inlet Auto-Eject. Includes [#COL] weatherproof gasketed cover. Location: [#LOC].	$443
1110-0045	Gast air compressor 110v model 3HBB-10-M300AX.	$997
1110-0046	Kussmaul 12V Auto Drain. For use with Kussmaul air compressor.	$432
1110-0048	Air inlet below bumper driver side. Fitting to be a Hansen male model B40 with protective plastic cover. Includes matching female model 4000 fitting (ship loose).	$443
1110-0049	Air Lines Wrapped in Thermal Loom	$1,697
1110-0050	Air brake lines to have 4 to 6'' slack for future service work.	$103
1110-0052	Air horns recessed behind bumper (PR). Includes E-ONE grilles on bumper.	$963
1110-0053	Air horns Grover recessed in front bumper. (1) air horn 21" long, (1) air horn 24.5" long	$976
1110-0054	Relocate air dryer to opposite the exhaust system inside the frame rails.	$249
1110-0055	Air horns will alternate from driver to officer.	$369
1110-0056	Air dryer Bendix ADIP.	$577

1110-0058	Air horns recessed in bumper (PR) with bells behind bumper.	$820
1110-0059	Air horns Grover (1510) recessed in bumper (PR). Locate both to driver side of bumper.	$956
1110-0066	Air horns Grover recessed in front bumper. (1) air horn 21" long, (1) air horn 24.5" long.	$1,145
1110-0077	Recessed air outlet off isolated tank. Location: [#LOC].	$344
1110-0082	Air horns Grover model 2040 rectangular recessed in bumper (PR) with snow caps.	$994
1110-0090	Air horns Grover recessed in bumper (PR) with snow caps.	$1,052
1110-0095	Automatic moisture ejector, heated. Wet tank only.	$167
1110-0097	Automatic moisture ejector, non-heated (EA).	$128
1110-0106	Air horns Grover recessed behind bumper (PR). Includes E-ONE grilles on bumper.	$1,131
1110-0116	Air horns Buehl recessed in bumper (PR).	$971
1125-0000	Retarder Telma focal mounted. Not available on tandem axle or four jack aerials	$9,370
1125-0001	Brake Jacob's exhaust	$697
1125-0002	Jacobs engine compression brake.	$1,622
1125-0003	Allison transmission retarder.	$11,103
1125-0007	Tag located at Jacob Brake Controller. To read: Do Not Operate on Wet or Slippery Surfaces.	$72
1125-0013	Lever control for Telma retarder. 5 position lever with low speed cutout.	$271
1125-0014	Dual retarder operation. Engine Jacobs brake and transmission retarders to both be operable at the same time. Requires special approval. Option contingent on receiving formal approval from driveline component suppliers.	$111
1125-0015	Relocate Jake Brake control to driver side of electrical access cover.	$368
1125-0017	Transmission to seek 3rd gear when Jacobs Compression brake is engaged. Requires special approval. Option contingent on receiving formal approval from driveline component suppliers.	$111
1125-0018	Compression brake for MAXXFORCE engines.	$1,622
1150-0054	Hinged diamond plate lid for driver side bumper tray. Includes 1/4 turn latch and gas shock hold open.	$251
1150-0055	Hinged diamond plate lid for center bumper tray. Includes 1/4 turn latch and gas shock hold open.	$275
1150-0056	Hinged diamond plate lid for officer side bumper tray. Includes 1/4 turn latch and gas shock hold open.	$251
1150-0059	Red vinyl lid with velcro fasteners for bumper tray driver side.	$164
1150-0060	Red vinyl lid with velcro fasteners for bumper tray officer side.	$164
1150-0061	Red vinyl lid with velcro fasteners for bumper tray center.	$164
1150-0062	Black vinyl lid with velcro fasteners for bumper tray driver side.	$164
1150-0063	Black vinyl lid with velcro fasteners for bumper tray officer side.	$164
1150-0064	Black vinyl lid with velcro fasteners for bumper tray center.	$164
1150-0065	Diamond plate lid for driver, center, and officer hose trays. 5.25" high with dual chrome grab handles, rubber hood latches and gas shocks.	$541
1150-0085	Nylon black strap on officer side front bumper tray (EA).	$71
1150-0086	Nylon black strap on driver side front bumper tray (EA).	$71
1150-0087	Nylon black strap on center front bumper tray (EA).	$71
1150-0094	Hinged diamond plate lid for driver side bumper tray. Includes D-Ring latch and gas shock hold open.	$274
1150-0095	Hinged diamond plate lid for center bumper tray. Includes D-Ring latch and gas shock hold open.	$299
1150-0096	Hinged diamond plate for officer side bumper tray. Includes D-Ring latch and gas shock hold open.	$274
1150-0097	Tray driver side bumper outboard for hydraulic/cord reel.	$629
1150-0098	Tray officer side bumper outboard for hydraulic/cord reel.	$629
1150-0100	Hinged floor of center bumper tray. Hinged to the rear.	$696
1150-0102	Diamond plate lid for driver hosetray. 5.25" high with chrome grab handle, rubber hood latch, gas shock and water stop angle.	$355
1150-0103	Diamond plate lid for center hose tray 5.25" high with chrome grab handle, rubber hood latch, gas shock and water stop angle.	$355
1150-0104	Diamond plate lid for officer hosetray. 5.25" high with chrome grab handle, rubber hood latch, gas shock and water stop angle.	$355
1150-0105	Diamond plate lid for center and driver hosetrays; 2/3 lid. 5.25" high with chrome grab handle, rubber hood latches, gas shocks and water stop angle.	$447
1150-0106	Diamond plate lid for center and officer hosetrays; 2/3 lid. 5.25" high with chrome grab handle, rubber hood latches, gas shocks and water stop angle.	$447
1150-0107	Nylon black strap with clip release on officer side front bumper tray.	$126
1150-0108	Nylon black strap with clip release on driver side front bumper tray.	$126
1150-0109	Nylon black strap with clip release on center front bumper tray. The strap shall be attached to the inboard side of the tray and shall not reduce the overall tray capacity	$126
1150-0111	Additional divider for front bumper hose tray.	$94
1150-0112	Hinged diamond plate lid for center bumper tray. Includes D-Ring latch and moon spring hold open.	$299
1150-0114	Access cover in center bumper tray for center bumper mounted speaker.	$85
1150-0115	Notch bumper tray lid for preconnected hose. Notch location: [#LOC].	$123
1150-0116	Bumper tray driver's side with slats 10 inches deep (approx 9 inches to slats).	$414
1150-0117	Bumper tray driver's side with slats 12 inches deep (approx 11 inches to slats).	$414
1150-0118	Bumper tray driver's side with slats 14 inches deep (approx 13 inches to slats).	$414

1150-0119	Bumper tray center of bumper with slats 10 inches deep (approx 9 inches to slats).	$414
1150-0120	Bumper tray center of bumper with slats 12 inches deep (approx 11 inches to slats).	$414
1150-0121	Bumper tray center of bumper with slats 14 inches deep (approx 13 inches to slats).	$414
1150-0122	Bumper tray officer's side with slats 10 inches deep (approx 9 inches to slats).	$414
1150-0123	Bumper tray officer's side with slats 12 inches deep (approx 11 inches to slats).	$414
1150-0124	Bumper tray officer's side with slats 14 inches deep (approx 13 inches to slats).	$414
1150-0125	Divider center bumper hose tray running front to back with adjustable track (Provides two storage areas, one left and one right of divider).	$217
1150-0126	Divider center bumper hose tray running side to side with adjustable track (Provides two storage areas, one ahead and one behind divider).	$217
1150-0127	Tray center of bumper with slats 34x13x16 with divider running side to side	$629
1150-0128	Notch front bumper tray for speaker/Q2B. Will reduce front hose/equipment load. Center tray only.	$111
1150-0129	Diamond plate lid for center hosetray. Includes chrome grab handle, rubber hood latches and gas shock.	$355
1150-0130	Black nylon cargo net on center front bumper tray.	$271
1150-0131	Extinguisher tube in front bumper extension. Location: [#LOC].	$698
1150-0132	Tray center bumper for hydraulic/cord reel.	$687
1150-0133	Diamond plate raised full lid for extended front bumper. 6" high with dual chrome grab hands, rubber hood latches and gas shocks.	$541
1150-0135	Royal Blue vinyl lid with velcro fasteners for center bumper tray.	$164
1150-0136	Bumper tray center of bumper with slats 16 inches deep (approx 15 inches to slats). Mount tray 1" above gravel shield.	$495
1150-0137	Diamond plate lid for center hosetray and jumpline next to tray. 5.25" high with chrome grab handle, rubber hood latch, gas shock and water stop angle if applicable.	$410
1150-0138	Bumper pan driver's side without slats 4 inches deep with strap. For use with suction strainer only.	$414
1150-0139	Nylon black strap with aluminum quick release buckle for front bumper hose tray. Strap to attach to front and rear walls of tray down low as applicable. Location: [#LOC].	$103
1150-0140	Bumper tray center of bumper with slats 14 inches deep (approx 13 inches to slats). Mount tray 1" above gravel shield.	$495
1150-0141	Bumper tray officer's side with slats 12 inches deep (approx 11 inches to slats). Mount tray 1" above gravel shield.	$495
1150-0142	Hinged diamond plate lid for center bumper tray. Includes (4) sides, 1/4 turn latch and gas shock hold open. For use with raised compts only.	$354
1150-0143	Hinged diamond plate lid for officer bumper tray. Includes (4) sides, 1/4 turn latch and gas shock hold open. For use with raised compts only.	$354
1150-0144	Diamond plate lid for center hosetray and jumpline next to tray. 8.25" high with chrome grab handle, rubber hood latch, gas shock and water stop angle if applicable.	$464
1150-0145	Single crosslay on top of the front bumper gravel shield. Tray to be "U" shape, 10" wide x 8" high x the width of the gravel shield. Vinyl cover, [#COL], with end flaps to cover crosslay, velcro along front edge, fastened along back. Requires 24" extension.	$762
1150-0146	Water stop angle. Gravel shield mounted. Requires raised lid and/or 28" bumper extension with reel trays.	$177
1150-0147	Diamond plate lid for driver, center, and officer hose trays. 5.25" high with dual chrome grab handles, SS butterfly latches and gas shocks.	$615
1150-0149	Nylon black cargo net on sides for bumper crosslay.	$200
1150-0150	Double crosslay on top of the front bumper gravel shield. Tray to be "U" shape, approx 20" wide x 7.5" high x 90" wide. Holds 200' of 1.75" DJ (each). Includes tri-fold diamond plate cover hinged at the front. Requires seperate side cover option and 28" extension.	$1,307
1150-0151	Booster Reel Roller Assembly. Locate in front of center bumper tray.	$318
1150-0152	Hinged diamond plate lid for officer side bumper tray. Includes D-Ring latch and gas shock hold open.	$274
1150-0153	Bumper tray officer's side with slats located between front intake and frame extension. Tray to be approx 9" W (min) x 17" L x 14" D (13" to slats) to hold 25' of 5" LDH.	$414
1150-0154	Bumper tray center of bumper with slats located to rear of Q2B. Tray to be approx 34"W x 9"L x 10" deep (9" to slats).	$602
1150-0157	Diamond plate raised full lid for extended front bumper. 6" high with dual chrome grab hands, rubber hood latches and gas shocks.	$645
1150-0158	Bumper tray center of bumper without slats 12 inches deep.	$282
1150-0160	Hinged smooth plate lid for center bumper tray. Includes D-Ring latch and gas shock hold open. Smooth plate lid will be painted with black Durabak.	$349
1150-0161	Double crosslay on top of the front bumper gravel shield. Tray to be "U" shape to hold 200' of 1.75" DJ (each). Includes bi-fold diamond plate cover hinged at the rear. Requires separate side cover option and 28" extension.	$1,307
1150-0162	Surface mounted tray center of bumper extension. Tray to be sized to fit between outboard reel trays and includes a 1" lip all the way around. Tray is for mounting of customer supplied hydraulic tools that will be utilized with reel applications.	$629
1150-0163	Tray officer side bumper next to front intake. Half moon style for 25' of 5'' rolled hose.	$598
1150-0174	Slatted Duradek flooring in driver side bumper tray.	$53

1150-0175	Slatted Duradek flooring in center bumper tray.	$53
1150-0176	Slatted Duradek flooring in officer side bumper tray.	$53
1150-0177	Notch front bumper tray for speaker/Q2B. Will reduce front hose/equipment load. Driver's side only.	$111
1150-0178	Hinged diamond plate lid for center bumper tray. Includes push button latch and gas shock hold open.	$275
1150-0179	Bumper tray center of bumper without slats 16 inches deep.	$354
1150-0180	Yellow vinyl lid with velcro fasteners for bumper tray center.	$164
1150-0181	Nylon black strap with aluminum quick release buckle for front bumper hose tray. Strap to attach to side walls of tray down low as applicable. Location: [#LOC].	$103
1150-0184	Vinyl [#COL] side covers for diamond plate bumper crosslay cover.	$169
1150-0185	Hinged diamond plate lid for center bumper tray. Includes push button latch and moon spring hold open.	$275
1150-0187	Nylon yellow strap with aluminium quick release buckle for front bumper hose tray. Strap to attach to front and rear walls of tray down low as applicable. Location: [#LOC].	$103
1150-0196	Tray officer side bumper next to front intake. Half moon style for 20' of 6" rolled hose.	$598
1150-0197	Nylon black strap with aluminium quick release buckle. Location: driver, officer and center top of front bumper gravel shield.	$308
1150-0198	Notch front bumper tray for speaker/Q2B. Will reduce front hose/equipment load. Officer's side only.	$111
1150-0199	Nylon black cargo net with bungee hold downs on sides for bumper crosslay.	$248
1150-0201	Notch front bumper tray for speaker/Q2B. Notch to be sized as close to obstacle as possible to provide more storage space in tray. Will reduce front hose/equipment load. Center only.	$111
1150-0203	Hinged smooth plate lid for center bumper tray. Includes D-Ring latch and gas shock hold open. Smooth plate lid will be painted with black Scorpion coating.	$349
1150-0204	Stainless steel roller assemblies for bumper crosslays. Includes side rollers only; no bottom.	$262
1150-0205	Recessed bumper crosslay. Includes raised lid with outboard fixed panels for optional equipment. Requires 20" extension, engineering approval and side covers.	$3,131
1150-0206	Hinged diamond plate lid for center bumper tray. Includes push button latch chrome grab handle and gas shock hold open.	$321
1150-0207	Hinged diamond plate lid for center bumper tray. Includes 1/4 turn latch and moon spring hold open.	$275
1150-0210	Tray driver side bumper next to frame. Half moon style for 25' of 5'' rolled hose.	$598
1150-0212	Nylon black strap with clip release on officer side front bumper tray running front to back.	$126
1150-0214	Traffic cone storage on front bumper extension. Cones to be oriented downard through a 7 3/4" hole in the gravelshield. Includes nylon strap with aluminum buckle. Location: [#LOC].	$343
1150-0215	Hinged diamond plate lid for center bumper tray. Includes 1/4 turn latch and two (2) gas shock hold open.	$301
1150-0216	Bumper tray lid(s) to be constucted using 3/16" aluminum ipos.	$132
1150-0219	Additional gas shock on front bumper tray lid. Location: [#LOC].	$142
1150-0220	Tray driver side bumper outboard for hydraulic/cord reel, 18 inches deep IPOS.	$767
1150-0221	Tray officer side bumper outboard for hydraulic/cord reel, 18 inches deep IPOS.	$767
1150-0225	The rear wall of bumper tray to have louvers for additional ventilation. Location: [#LOC].	$161
1150-0226	Smooth plate raised full lid with black Durabak finish for extended front bumper. 6" high with dual chrome grab hands, rubber hood latches and gas shocks.	$1,327
1150-0230	Bumper trough full length, mounted on top of gravel shield. Trough shall run side to side 4" high, 7" wide made from 3/16" smooth plate aluminum.	$221
1150-0231	Nylon black strap with aluminum quick release buckle for front bumper hose tray. Strap to attach to front and rear walls of tray as high as possible. Location: [#LOC].	$103
1150-0232	Hinged diamond plate lid for center bumper tray. Includes Tri-Mark latch and gas shock hold open.	$368
1150-0234	Bumper tray driver's side with slats 10 inches deep (approx 9 inches to slats). Tray interior to be painted with black Scorpion coating, Slat assembly to remain unpainted aluminum.	$507
1150-0235	Diamond plate lid 3/16 " thick for driver, center, and officer hose trays. 5.25" high with dual chrome grab handles, SS butterfly latches and gas shocks.	$667
1150-0236	Recessed bumper double crosslay to hold of 200' of 1.75" DJ hose in each crosslay. The crosslay floor/bottom shall be slotted to allow drainage (no slats). Includes hinged bi-fold raised lid in center with outboard fixed panels for optional equipment and stainless steel scuff guards at each side of crosslay opening across bottom and sides. Requires 28" extension, side covers, 12" heavy duty bumper and engineering approval.	$3,387
1155-0001	Receiver under body rearward of wheel well (PR) for winch or rope use (does not include 12V power plug).	$2,974
1155-0002	Winch, electric front mounted Ramsey 12,000 lb.	$3,719
1155-0003	Winch Warn Series 8 - 8,000lb with 125' 3/8" plated cable.	$3,192
1155-0005	Winch, Warn Series 12, 12,000 lb. with 125' 3/8" plated cable. Includes access door with quarter turn latch and spring hold open device.	$4,677
1155-0013	Winch, Warn Series 12, 12,000 lb. with 125' 3/8" plated cable. Includes access door that is smooth plate alum (IPO tread) and painted with black Scorpion brand coating inside and outside surfaces (smooth finish). Latch to be D-Ring style (IPO std. 1/4 turn latch). Lid to have 1 gas shock.	$4,793
1160-0000	Bumper 10" stainless steel.	$1,163

1160-0001	Bumper 12" high swept back stainless steel.	$1,316
1160-0002	Bumper reinforcement backing. For use with 10" SS or heavy duty bumpers only.	$412
1160-0008	3/16" Front Bumper Gravel Shield.	$415
1160-0012	12" Front Bumper Gravel Shield Extension.	$131
1160-0013	16" Front Bumper Gravel Shield Extension.	$251
1160-0014	20" Front Bumper Gravel Shield Extension.	$445
1160-0015	24" Front Bumper Gravel Shield Extension.	$589
1160-0016	28" Front Bumper Gravel Shield Extension.	$713
1160-0020	License plate holder mounted center of front bumper.	$36
1160-0021	Number plate, removable size to fit between air horns on front bumper. Spaced out from face of bumper so plate can be removed.	$160
1160-0030	Steel tow bar located below front bumper mounted to chassis extensions for towing purposes only, painted black.	$1,677
1160-0031	Notch front bumper for low "S" type front intake. Includes tray below pipe extending from cab to bumper.	$988
1160-0034	8" Front Bumper Extension.	$131
1160-0041	Heavy duty front bumper 10" high with full wrap around. To be painted job color.	$2,040
1160-0049	License plate holder mounted officer side of front bumper.	$36
1160-0050	12" heavy duty front bumper with full wrap around. To be painted L0318EG metallic silver.	$2,040
1160-0051	3/16" Front Bumper Gravel Shield. Smooth plate painted with black Durabak.	$1,223
1160-0052	Recessed winch receiver in front bumper for model QM5000 portable winch. Includes swing down front center section of bumper for winch access, bumper reinforcement, winch enclosure, raised lid, and port winch wiring. For use on E-ONE chassis with 10" high 28'' ext bumper only.	$4,425
1160-0053	14" Front Bumper Gravel Shield Extension.	$191
1160-0054	Overlay front heavy duty bumper with diamond plate panels.	$348
1160-0055	Guard straps for bumper mtd recessed Q2B - polished stainless steel.	$277
1160-0060	Dock bumpers (4) on front bumper equally spaced (as applicable).	$275
1160-0064	Heavy duty front bumper 10" high with full wrap around. To be painted [#COL].	$2,040
1160-0065	Heavy duty front bumper 10" high with full wrap around. Center of bumper to have a 5" deep notch for recessed Q2B. Bumper to be painted job color.	$2,531
1160-0066	License plate holder mounted driver side of front bumper.	$36
1160-0068	1/8" Front Bumper Gravel Shield. Smooth plate painted with black Durabak.	$1,223
1160-0084	Heavy duty 12" front bumper with full wrap around. To be painted job color.	$2,040
1160-0086	Removable number plate with mounting brackets. Locate centered on front bumper. Plate to be painted job color. Plate to be 8"W x 8"H. Lettering and/or graphics not included.	$238
1160-0088	Removable number plate with mounting brackets. Locate [#LOC]. Plate to be painted job color. Plate to be 12"W x 8"H. Lettering and/or graphics not included.	$238
1160-0094	18" Front Bumper Gravel Shield Extension.	$349
1160-0095	Heavy duty front bumper with full wrap around. To be painted FLNA 91733 silver.	$2,040
1160-0104	Swing down front section of bumper. 10" front bumper only. Requires extended front bumper and bumper reinforcement.	$1,058
1160-0105	Removable number plate with mounting brackets. Locate [#LOC]. Plate to be painted lower job color (if cab is painted two tone). Plate to be 14"W x 8"H. Lettering and/or graphics not included.	$261
1160-0108	3/16" Front Bumper Gravel Shield. Smooth plate painted with black Scorpion coating.	$1,223
1160-0116	Heavy duty front bumper 10" high with full wrap around. Driver side of bumper to have a 5" deep notch for recessed Q2B. Bumper to be painted job color.	$2,531
1160-0117	License plate holder mounted driver side of front bumper.	$36
1200-0018	T handle transmission selector.	$1,391
1200-0020	TransSynd synthetic transmission fluid for EVS3000.	$174
1200-0021	TransSynd synthetic transmission fluid for EVS 4000.	$274
1200-0062	The engine oil and transmission dip sticks to have tags. Tags to be attached to each by cable. Use colored tag to match dip stick color.	$138
1200-0065	Transfer Case for All Wheel Drive- single speed with front axle declutch	$8,812
1200-0076	Transmission to be 4500 in place of the 4000. Gears 1 through 4 shall be programmed as "D" (Drive). Gear 5 to be programmed to activate via "mode" switch on shifter.	$2,727
1200-0083	Transmission re-programming. ''D'' allows transmission to shift from 1st - 4th gear, and ''Mode'' allows 5th gear.	$616
1200-0115	Polyurethane engine mounts. Cummins engines only.	$99
1200-0233	Eng/Trans Cummins ISL 330HP/EVS3000 2013 EPA compliant engine.	$71,155
1200-0234	Eng/Trans Cummins ISL 350HP/EVS3000 2013 EPA compliant engine.	$73,709
1200-0235	Eng/Trans Cummins ISL 400HP/EVS3000 2013 EPA compliant engine.	$85,790
1200-0236	Eng/Trans Cummins ISL 450HP/EVS3000 2013 EPA compliant engine.	$86,532
1200-0238	Eng/Trans Cummins ISX12 450HP with EVS4000 transmission. 2013 EPA Compliant.	$111,291
1200-0239	Eng/Trans Cummins ISX12 500HP with EVS4000 transmission. 2013 EPA Compliant.	$112,635
1200-0241	Eng/Trans Cummins ISX15 550HP with EVS4000 transmission. 2013 EPA Compliant.	$118,810
1200-0242	Eng/Trans Cummins ISX15 600HP with EVS4000 transmission. 2013 EPA Compliant.	$121,760
1225-0005	Exhaust heat shield. Locate below compartment floor.	$168
1225-0006	Exhaust tip stainless steel for Plymovent. For exhaust extraction system.	$319

1225-0007	Exhaust Brake Silencer Donaldson Silent Partner	$867
1225-0008	Wrap exhaust with heat tape from the turbo down to the flex pipe. Visually inspect after install for tears in material. Wrap outside with wire mesh to keep material from coming off.	$760
1225-0009	Anchor plate for Nederman exhaust system. For use with standard nozzle. Ship Loose.	$236
1225-0012	Ward No Smoke Exhaust System.	$15,856
1225-0013	Tailpipe support. Locate between tailpipe and body approx 10" in from edge of body.	$480
1225-0014	Exhaust driver side custom chassis.	$560
1225-0015	Vertical exhaust officer side. This will include the vertical exhaust support.	$1,474
1225-0016	Locate exhaust end between rear of compartment ahead of wheels and ahead of forward wheel well angle at approx. 45 degrees to rear.	$217
1225-0017	Verical exhaust elbow chrome plated 90 degree. Due to high heat from 2007 emission exhaust systems, dis-coloring of exhaust end may occur after prolonged use.	$279
1225-0020	Exhaust tip MagneGrip. For exhaust extraction system. Tip to protrude appox. 2" outside of body (Not rubrail).	$584
1225-0021	Cover exhaust with blanket from the turbo down to the flex pipe. Visually inspect after install for tears in material.	$269
1225-0024	Plymovent Grabber magnetic exhaust end. Bolt-on for exhaust extraction system.	$389
1225-0025	Vertical exhaust officer side. This will include the vertical exhaust support. Locate to forward area of module (internal) with exhaust end being approx. 5" above ladders stowed on ladder rack.	$1,670
1225-0026	Rain cap vertical exhaust chrome.	$80
1225-0031	Wrap exhaust with heat tape from the turbo down to the muffler. Visually inspect after install for tears in material. Wrap outside with wire mesh to keep material from coming off.	$805
1225-0033	Exhaust diverter. Diverts exhaust from officer side to driver side. Includes well labeled switch accessible to driver.	$1,195
1225-0035	Exhaust end for Plymovent. For exhaust extraction system. Exhaust to be angled rearward to allow for possible deflection if impacted.	$433
1250-0003	Frame 10.25 x 3.5 x .375 chassis.	$5,053
1250-0006	Frame liner 9.375 x 3.125 x .375.	$2,782
1250-0011	Rear underbody support frame.	$529
1250-0013	Main frame - 12.0x3.5x.375 with 11.125 liner and 10" step. Step frame - 10.25x3.5x.375 with 9.375 liner.	$19,344
1250-0015	Frame assembly to include 176" wheelbase and 41" framecut.	$16,446
1250-0016	Frame assembly to include 196" wheelbase and 41" framecut.	$16,446
1250-0017	Frame assembly to include 210" wheelbase and 41" framecut.	$16,446
1250-0018	Frame assembly to include 182" wheelbase and 47" framecut.	$16,446
1250-0019	Frame assembly to include 202" wheelbase and 47" framecut.	$16,446
1250-0020	Frame assembly to include 216" wheelbase and 47" framecut.	$16,446
1250-0022	Frame assembly to include 212" wheelbase and 47" framecut.	$16,446
1250-0025	Frame 12 x 3.5 x .375 chassis.	$5,053
1250-0028	Rear heavy duty underbody support frame.	$1,415
1250-0057	Rear underbody support frame. SS eMAX product.	$529
1250-0061	Frame liner "L" 8.875 x 3.125 x .375.	$2,582
1250-0065	Rear chassis subframe for Urban Interface pumper. Raises bottom of chassis approx 4". For use with 12" frame rails and FS-25 front axle only.	$2,121
1250-0066	Rear chassis subframe for 4x4. Raises bottom of chassis 9.375". For use with 12" frame rails and AxleTech 4000 front axle only.	$2,547
1250-0067	Chassis frame rails shall be zinc plated (galvanized) IPOS. Includes rear subframe rails (if applicable).	$1,815
1250-0068	Chassis frame rails, front frame extensions, rear subframe (Urban Interface), crossmembers and battery brackets shall be zinc plated (galvanized) IPOS.	$4,389
1250-0069	Chassis frame rails, front frame extensions, rear 4x4 / 6x6 subframe, crossmembers and battery brackets shall be zinc plated (galvanized) IPOS.	$4,741
1250-0070	Chassis frame liner shall be zinc plated (galvanized) IPOS.	$464
1350-0001	Dual fuel fill package. Additional fuel fill provided on officer side of unit.	$463
1350-0003	Fuel system 50 gallon.	$1,382
1350-0005	Fuel system 65 gallons.	$1,460
1350-0006	Fuel system 100 gallons	$2,092
1350-0008	Fuel water separator Fuel-Pro 382. Filter is top servicable.	$632
1350-0009	Fuel line hose braided.	$269
1350-0010	Fuel pick-up for generator or pump. Includes hoses run to generator compartment.	$124
1350-0011	Fuel pump electric w/re-prime.	$383
1350-0012	Fuel shut-off valve. Location: [#LOC].	$97
1350-0013	Racor fuel/water separator to be a bottom drop out style. Shall include indicator light and audible alarm.	$666
1350-0014	Thermal control in-line fuel heater.	$443
1350-0015	Locking fuel cap (PR) ARFF.	$169
1350-0023	Fuel cooler, to be routed from the discharge side of the pump to the chassis fuel line. Cooler to be functioning when the pump is in operation.	$424

1350-0025	Fuel line hose braided. Includes re-usable fittings on both ends of the hose.	$269
1350-0026	Fuel Lines Wrapped in Thermal Loom	$795
1350-0027	Fitch fuel catalyst drop in style	$760
1350-0028	Additional Fuel Sender in tank. For future use only. No wiring.	$337
1350-0029	Racor fuel separator. To allow fuel flow to primary or secondary (back-up) fuel separator. Control valve to be located in pump compartment access in walkway with labeling. Locate adjacent to primary Racor unit.	$1,041
1350-0037	Fuel system w/65 gallon stainless steel tank.	$2,565
1350-0043	Fuel system w/50 gallon stainless steel tank.	$2,357
1350-0046	Fuel water separator Fuel-Pro 382 with light and alarm. Filter is top servicable.	$730
1350-0048	Fuel system 100 gallons. Tank located above framerails to rear of cab.	$2,092
1350-0049	Fuel system 85 gallons. Tank located above framerails to rear of cab.	$2,092
1400-0002	Battery four group 31 1000 CCA.	$916
1400-0003	Battery six group 31 1000 CCA.	$1,369
1400-0010	Battery six Delco 1150 Hi-Cycle 700 CCA.	$1,206
1400-0011	Battery splash cover for ULC compliance.	$275
1400-0013	Battery four group 31 1000CCA. (3) batteries driver side, (1) battery officer side w/ available space for additional (2) batteries on officer side.	$1,143
1400-0019	Special battery jumper stud location. Jumper studs to be located [#LOC].	$323
1400-0020	Relocate custom chassis batteries. Location: [#LOC].	$968
1400-0021	Six (6) Odyssey Group 31 1000CCA Batteries. Locate (3) each side of the chassis.	$3,486
1400-0023	Battery six Delco 1110 Hi-Cycle 750CCA.	$1,206
1400-0024	Jumper studs to be located below driver's side front corner of body (or pump module if equipped). Studs to face down with positive stud outboard.	$195
1400-0027	Additional set of jumper studs. Location: Opposite standard location.	$332
1400-0028	Battery six Optima model D31T 900CCA.	$3,190
1400-0029	Battery jump start system. Includes Anderson receptacle under officer side running board offset forward and 25' jumper cables with alligator clips and Anderson connector.	$551
1400-0031	Stainless steel battery trays with stainless steel covers.	$1,363
1400-0032	Battery five group 31 1000 CCA (two left / three right). For use with below cab DEF tank only.	$1,143
1400-0033	Heater pads for (4) Group 31 battery system. Wire pads to block heater receptacle.	$934
1400-0034	Stainless steel battery trays.	$462
1400-0036	Battery six group 31 1000CCA. Deka model 1231MF.	$1,584
1400-0037	Battery rollout tray in body compartment R1.	$624
1400-0038	Battery two 8D 1400 CCA.	$1,119
1400-0039	Battery five Optima model D31T 900CCA.	$2,823
1400-0040	Battery set additional two group 31 1000 CCA. Location: [#LOC].	$507
1400-0042	Jumper studs to be located below driver's side front corner of body (or pump module if equipped). Studs to face outboard.	$195
1500	**Cab**	
1510-0000	Seat cavity covers.	$159
1510-0035	Universal air pack bottle bracket (EA). Location: [#LOC].	$138
1510-0038	Driver seat 911 air ride.	$854
1510-0039	Driver seat to be 911 air ride with SCBA back	$1,015
1510-0040	Officer seat to be 911 air ride	$854
1510-0041	Officer seat 911 air ride SCBA.	$1,015
1510-0042	Officer seat to be 911 fixed SCBA.	$829
1510-0043	Driver seat to be Bostrom air ride.	$945
1510-0044	Driver seat to be Bostrom air ride with SCBA back	$1,097
1510-0045	Officer seat to be Bostrom air ride.	$945
1510-0046	Officer seat to be Bostrom air ride SCBA.	$1,097
1510-0047	Officer seat to be Bostrom fixed SCBA.	$917
1510-0048	Driver seat to be 911 electric	$1,275
1510-0049	Driver seat to be Bostrom electric.	$1,362
1510-0050	Rear facing 911 seat with SCBA driver's side.	$713
1510-0051	Engine cover 911 one man bench with SCBA	$934
1510-0052	Engine cover 911 two man bench with SCBA.	$1,577
1510-0053	Rear facing 911 seat with SCBA officer's side.	$713
1510-0054	Rear facing Bostrom seat with SCBA driver's side.	$687
1510-0055	Engine cover Bostrom one man bench with SCBA	$960
1510-0056	Engine cover Bostrom two man bench with SCBA.	$1,599
1510-0057	Rear facing Bostrom seat with SCBA officer's side.	$687
1510-0058	Fold down 911 seat located [#LOC]	$383
1510-0059	Fold down 911SCBA seat located [#LOC].	$846
1510-0060	Fold down Bostrom seat located [#LOC].	$383
1510-0061	Fold down Bostrom SCBA seat located [#LOC].	$795
1510-0062	Two man bench centered on rear wall with 911 SCBA backs.	$1,215
1510-0063	Two man bench centered on rear wall with Bostrom SCBA.	$1,499

1510-0064	Four man bench centered on rear wall with 911 SCBA	$2,864
1510-0065	Four man bench centered on rear wall with Bostrom SCBA.	$2,638
1510-0066	One man bench centered on rear wall with 911 SCBA	$989
1510-0067	One man bench centered on rear wall with Bostrom SCBA	$1,078
1510-0068	Three 911 SCBA seats rear facing, one outboard driver, one outboard officer, one centered.	$2,142
1510-0069	Three 911 SCBA seats rear facing, one outboard driver, one outboard officer, one centered for top mount enclosed cab only. The outboard seats to be angled 30 degrees inward.	$2,142
1510-0070	Three Bostrom SCBA seats rear facing, one outboard driver, one outboard officer, one centered. For top mount enclosed cab only.	$2,299
1510-0076	Bostrom SCBA seats forward facing center of rear wall (PR). Free standing with individual risers on rear wall.	$1,832
1510-0078	Three individual forward facing 911 Imperial 1200 gray attendant seats with flip up bottom seat cushions. Bottom cushions to be large as possible.	$2,474
1510-0079	Rear Seat Riser Storage. Includes smooth plate doors with push-button latches and 250lbs. slide out trays- (1) each side. Compartment opening to be 17" w x 10" h and transverse side to side. Riser to be Zolatone gray.	$2,439
1510-0080	Officer seat to be 911 attendant.	$600
1510-0081	Cab occupant detection seating system. Wired to visual indicator (hazard light). Includes audible alarm. Requires multiplex electrical system.	$4,199
1510-0082	Zico Quic-Hold mechanical air pack bottle bracket for 5'' bottle (ea). Model MWAB with adjustable footplate and pull release strap. Location: [#LOC].	$503
1510-0083	911 Attendant seat with individual riser (PR). Locate centered on rear wall.	$2,046
1510-0084	Officer seat to be Bostrom electric	$1,362
1510-0085	Custom logo embroidery (EA). Bostrom seats only. Requires set-up sales code.	$120
1510-0086	Embroidery set-up for Bostrom cab seats.	$620
1510-0087	Center rear wall seats to be mounted approximately 11" apart. Quest only.	$216
1510-0088	911 SCBA seats forward facing center of rear wall (PR). Free standing mtd on a common seat riser.	$1,912
1510-0089	Tailbone pad for jump seat(s). (Reference print #634894)	$44
1510-0090	One man bench (PR) on rear cab wall with Bostrom SCBA back. Location: driver and officer side outboard.	$1,502
1510-0091	Zico Quic-Hold mechanical air pack bottle bracket (EA). Model QLM-U-OPR with adjustable footplate and pull release. Location: [#LOC].	$608
1510-0092	Two man bench centered on rear wall with bench seat style back cushion.	$1,173
1510-0093	Custom logo embroidery (EA). Seats Inc. seats only. Requires set-up sales code.	$134
1510-0094	Embroidery set-up for Seats Inc. 911 cab seats.	$823
1510-0095	Driver seat Bostrom electric with integral seat belt.	$1,516
1510-0096	Officer seat Bostrom electric with SCBA back with integral seat belt.	$1,807
1510-0097	Rear facing seat driver side Bostrom with SCBA back and integral seat belt.	$769
1510-0098	Rear facing seat officer side Bostrom with SCBA back and integral seat belt.	$769
1510-0099	Rear wall seat Bostrom flip-up with SCBA back and integral seat belt. Location: [#LOC].	$1,066
1510-0100	Padded headrest for fold down jump seat (EA). Not available with rear wall windows.	$111
1510-0101	Driver and officer outboard rear facing seats mounted at 30 degree angle. Includes upper seat belt brkt. adjusted to rear of cab.	$442
1510-0104	911 SCBA seat forward facing center of rear wall. Free standing mtd on seat riser.	$958
1510-0105	One man bench (PR) on rear cab wall with Seats 911 SCBA back. Location: driver and officer side outboard.	$1,218
1510-0106	911 SCBA seats forward facing rear wall (PR). Equally spaced with individual risers on rear wall.	$1,912
1510-0116	Fold-down seat located [#LOC].	$381
1510-0117	Bostrom SecureAll mechanical air pack bottle bracket (EA). Location: [#LOC].	$483
1510-0118	Flip-up 911 SCBA seat located [#LOC].	$870
1510-0119	Flip up Bostrom SCBA seat located [#LOC].	$898
1510-0120	Flip up 911 attendant seat located [#LOC].	$950
1510-0121	Flip up Bostrom attendant seat located [#LOC].	$1,058
1510-0122	Fold down seat with 911 SCBA back located [#LOC].	$848
1510-0123	Fold down seat with Bostrom SCBA back located [#LOC].	$861
1510-0124	Officer seat fixed Bostrom with SCBA back and integral seat belt.	$891
1510-0126	CrewGuard occupant seating detection system. Display location: [#LOC].	$3,141
1510-0127	Additional CrewGuard display. Location: [#LOC].	$250
1510-0128	FlameFighter air pack bottle bracket (EA). Model 17000 with adjustable footplate and push-button release. Location: [#LOC]	$487
1510-0129	Two man bench centered on rear wall with Bostrom SCBA backs for use with ALS provision with side access only. Includes (1) horizontally hinged door on the front of the rear bench seat for access to storage below bench.	$1,896
1510-0130	Flip up Bostrom ABTS attendant seat located [#LOC].	$987
1510-0131	Bostrom SecureAll mechanical air pack bottle bracket (EA) for bench / fold-down seat. Location: [#LOC].	$593

1510-0132	Rear Seat Riser Storage. Includes smooth plate doors with push-button latches on sides and front (access to battery charger). Side access is to SCBA storage (2) bottles. Bottles to be stored on plastic trays with vecro strapping to secure bottles with unit in motion. Side compartment openings to be 17" w x 10" h x 26" d. Front access to be a drop down door with push-button latches. Riser and doors to be cab interior color.	$2,390
1510-0133	Adjust rear facing outboard seats as far inboard as appicable next to engine cover.	$107
1510-0134	Rear wall seat Bostrom air ride Sierra non SCBA. Includes single riser. N/A with outboard rear wall seats. Storage below seat N/A. Location: [#LOC].	$1,253
1510-0135	Arm rest installed on both sides of the seat. Location: [#LOC].	$457
1510-0136	Center rear wall seats to be mounted approximately 5" apart. C2X/T2X only.	$216
1510-0137	Bostrom SCBA seat forward facing center of rear wall. Free standing mtd on seat riser.	$966
1510-0138	Two man bench centered on rear wall with (1) 911 SCBA back driver and (1) bench back cushion officer.	$1,068
1510-0144	FlameFighter model 14000 air pack bottle bracket with model 39015 safety strap (EA). Location: [#LOC]	$208
1510-0146	911 AIR SCBA seats forward facing center of rear wall (PR). Free standing with individual risers on rear wall.	$2,749
1510-0147	911 SCBA seats forward facing rear wall (3). Equally spaced with common riser on rear wall. Extended cab with medium doors only.	$2,868
1510-0148	Rear facing 911 attendant seat driver's side.	$600
1510-0149	Rear facing 911 attendant seat officer's side.	$600
1510-0150	Two man bench centered on rear wall with (1) Bostrom SCBA back officer and (1) bench back cushion driver.	$1,352
1510-0152	N/A - Base extends to far rearward) Driver seat Bostrom mechanical with integral seat belt.	$1,724
1510-0153	Bostrom SCBA seats forward facing center of rear wall (PR). Free standing mounted on a common seat riser.	$1,832
1510-0154	Three man bench offset to driver on rear wall with Bostrom SCBA backs for use with ALS provision with officer side access only. Includes provision for rear heaters mounted below bench.	$2,379
1510-0155	Bostrom SCBA seats forward facing rear wall (3). Equally spaced with common riser on rear wall. Extended cab with medium doors only.	$2,691
1510-0185	Rear facing seat center rear engine cover Bostrom with SCBA back and integral seat belt.	$843
1510-0186	Driver and officer outboard rear facing seats mounted at 10 degree inboard angle.	$442
1510-0200	Department patch sewn on Bostrom seat (EA). Requires customer supplied department patch for each seat.	$96
1510-0203	Bracket SCBA Lifeguard SmartDock Gen2 restraint system. Location: [#LOC].	$449
1510-0204	Officer seat to be 911 electric SCBA	$1,794
1510-0206	Zico electric hands-free air pack bottle bracket (EA). Model QM-ELB with adjustable footplate. Bracket release will be activated with park brake. Location: [#LOC].	$653
1510-0207	Riser to be 13" in height. Vista cabs only.	$133
1510-0209	Driver seat to be 911 attendant. Includes forward and aft adjustment.	$600
1510-0210	Two man bench centered on rear wall with bench style back cushion for use with ALS provision with side access only.	$1,569
1510-0212	Officer seat to be Bostrom SCBA air ride with integral seat belt.	$2,339
1510-0213	Rear wall seat riser to be 16" in height. Vista cabs only.	$133
1510-0214	Rear wall seat riser to be raised 4" in height. Includes 2" bench seat cushion thickness reduction for non-vista roofs.	$133
1510-0217	Arm rest rear wall (PR). Located outboard of non-SCBA back bench seat cushion.	$384
1510-0226	Officer seat to be Bostrom fixed attendant.	$581
1510-0228	Three man bench center on rear wall with 911 SCBA backs. Includes provision for rear heaters mounted below bench (if equipped).	$2,632
1510-0229	(2) Flip up Bostrom attendant seats with common riser located center on rear wall.	$2,113
1510-0233	Three man bench center on rear wall with Bostrom SCBA backs. Includes provision for rear heaters mounted below bench (if equipped).	$2,379
1510-0235	Two man bench centered on rear wall with Seats 911 SCBA backs for use with ALS provision. Includes recess for SCBA brackets in wall.	$2,792
1510-0238	Bostrom SCBA seats with integral seat belt forward facing center of rear wall (PR). Free standing mounted on a common seat riser.	$1,996
1510-0240	Driver, officer and rear bench seat riser constructed of diamond plated IPOS (as equipped). Includes diamond plate overlay for rear facing seats.	$298
1510-0241	Driver and officer's seat riser constructed of diamond plated IPOS (as equipped).	$108
1510-0243	Two (2) Bostrom SCBA seat backs and a three (3) person bench (no center position).	$1,939
1510-0244	Driver seat Bostrom electric with SCBA back with integral seat belt.	$1,807
1510-0248	Seats Inc 911 SCBA seat forward facing rear wall center. For use with extended cab with side access ALS compartments. Includes pass-thru and rear heater provision (if equipped).	$979
1510-0249	Two man bench centered on rear wall with Bostrom SCBA backs for use with ALS provision with side access only or interior side compartments. Includes provision for rear heaters mounted below bench.	$1,896

1510-0252	Location modification of electric seat controls. The controls shall be relocated to the outboard side of the seat as mounted IPO standard location.	$192
1510-0253	Bostrom SecureAll mechanical air pack bottle bracket (EA). SecureAll factory adjusted to accommodate carbon fiber bottle(s) in mounted location(s) as specified. Location: [#LOC].	$483
1510-0254	Bostrom SecureAll mechanical air pack bottle bracket (EA) for bench / fold-down seat. SecureAll factory adjusted to accommodate carbon fiber bottle(s) in mounted location(s) as specified. Location: [#LOC].	$593
1515-0012	Paint air conditioning condenser job color.	$726
1515-0017	Air conditioning for the Typhoon X, CII X and Quest with Cummins ISC/ISL engine, radiator mounted condenser.	$6,040
1515-0018	Air conditioning for the CII X and Quest with Cummins ISM, ISX or Detroit Diesel Series 60 engine, roof top mounted condenser.	$7,054
1515-0019	Air Conditioning lines and fittings wrapped	$380
1515-0020	Well nut fasteners to attach A/C filter to overhead panel	$220
1515-0023	A/C Cutoff Switch. Install switch in cab dash to turn off A/C in rear crew area.	$55
1515-0027	Danhard cooling system for cab medical cabinet. 115v / 12v 13,500 BTU wired to battery charger recept. Includes auto transfer switch and IOTA 75A converter mounted on permanent shelf above breaker box in L1 compt. Evaporator to be cabimet mtd, condensor to be roof mtd and compressor to be frame mtd. Note: System draws up to 12 amps AC.	$5,579
1515-0028	Danhard cooling system for cab medical cabinet. 115v / 12v 13,500 BTU wired to battery charger recept. Includes auto transfer switch. Evaporator to be cabinet mtd and condensor to be roof mtd. Note: System draws up to 12 amps AC.	$5,404
1515-0029	Air conditioning for the TyphoonX, CII X and Quest with Cummins ISC or ISL, roof top mounted condensor.	$7,054
1515-0031	Roof mtd A/C system Penguin 13,500 BTU. Locate on cab roof wired to shore power. Includes auto transfer switch.	$3,219
1515-0034	Roof mtd A/C system Coleman 13,500 BTU. Locate on rear cab roof wired to shore power and (if equipped w/auto transfer) generator.	$1,792
1515-0035	Stainless steel pan for roof mounted A/C unit. Includes drain line to rear of cab. Drain not to drip on drivelines.	$585
1515-0038	Air hose routed from the compressor to the dryer shall be upgraded to include stainless steel mesh for the full length of hose.	$71
1515-0039	Locate roof mountd AC condensor centered on forward vista roof. Includes routing AC lines down front of vista with cover(s).	$1,139
1515-0040	Heating and air conditioning cab controls shall be located in the lower center dash panel between driver and officer.	$443
1520-0000	Cyclone II medium cab 58" CA	$50,768
1520-0001	Cyclone II long cab 67.5" CA	$56,085
1520-0002	Cyclone II extended cab 80" CA	$56,663
1520-0003	Typhoon long cab 67.5" CA	$34,114
1520-0004	Typhoon Medium cab 58" CA	$31,802
1520-0005	Cyclone II medium cab three door with rear door on officer's side.	$50,768
1520-0006	Cyclone II long cab three door with rear door on officer's side.	$56,085
1520-0008	Cyclone II X medium cab with 58" CA	$48,947
1520-0009	Cyclone II X short cab with 44.5" CA	$52,425
1520-0010	Cyclone II X long cab with 67.5" CA	$54,266
1520-0011	Cyclone II X extended cab with 80" CA	$54,844
1520-0012	Typhoon X long cab with 67.5" CA	$32,294
1520-0013	Typhoon X medium cab with 58" CA	$29,983
1520-0015	Cyclone II X medium cab with ALS provision and 80" CA. Includes exterior hinged ALS doors approx 73" high.	$56,181
1520-0017	Quest long cab with 68" CA	$54,266
1520-0018	Quest medium cab with 58" CA	$48,947
1520-0019	Cyclone II X medium cab with ALS provision, barrier style doors and 80" CA. Includes exterior hinged ALS doors approx 73" high.	$56,888
1520-0020	Quest medium cab with 58" CA and barrier style doors.	$49,655
1520-0021	Typhoon X long cab with 67.5" CA. Includes barrier style doors.	$33,003
1520-0022	Cyclone II X medium cab with 58'' CA. Includes barrier style doors.	$49,655
1520-0023	Cyclone II X long cab with 67.5" CA. Includes barrier style doors.	$54,976
1520-0024	Cyclone II X extended cab with 80" CA. Includes barrier style doors.	$55,551
1520-0025	Typhoon X medium cab with 58" CA. Includes barrier style doors.	$30,701
1520-0026	Quest long cab with 68" CA and barrier style doors.	$54,976
1520-0027	Quest extended cab with 80" CA.	$54,844
1520-0029	Typhoon X short cab with 44.5" CA	$29,983
1520-0030	Cyclone II X Hush/Mid-Engine long cab with 67.5" C/A	$53,299
1520-0031	Cyclone II X Hush/Mid-Engine medium cab with 58" C/A.	$47,980
1520-0032	Cyclone II X Hush/Mid-Engine medium cab with 58" C/A. Includes barrier style doors.	$48,677
1520-0033	Cyclone II X Hush/Mid-Engine long cab with 67.5" C/A. Includes barrier style doors.	$54,008

1520-0081	Cyclone II X short cab with 44.5" CA and right hand drive.	$65,719
1520-0087	Cyclone II X short cab 2 door with 44.5" ca. Includes transverse compartment at rear of cab above the front axle accessible from both sides. The compartment is approx 35" wide x 35" high x the width of the cab.	$52,425
1520-0090	Cyclone II X (3) door extended cab with 80" CA. Officer side rear door.	$54,844
1520-0096	Typhoon X extended cab with 80" CA	$35,881
1520-0097	Typhoon X extended cab with 80" CA. Includes barrier style doors.	$36,590
1535-0002	Driver side cab wheel well medical cabinet approximately 42 x 22 (25 Quest) x 28. Includes external locking roll-up door and interior hinged door with locking push-button latch. Cabinet includes (2) adjustable shelves.	$1,863
1535-0003	Officer side cab wheel well medical cabinet approximately 42 x 22 (25 Quest) x 28. Includes external locking roll-up door and interior hinged door with locking push-button latch. Cabinet includes (2) adjustable shelves.	$1,863
1535-0004	Medical cabinet mounted on rear wall of cab 48 x 32 x 24 with a locking roll up door. Lower door opening raised to provide hand clearance.	$3,862
1535-0005	Medical cabinet mounted on rear wall of cab 48 x 40 x 20 with locking roll up door. Lower door opening raised to provide hand clearance.	$3,631
1535-0006	Medical cabinet mounted on rear wall of cab 55X32X19 with a locking roll up door. Lower door opening raised to provide hand clearance.	$2,476
1535-0007	Medical cabinet mounted on rear wall of cab 55 x 40 x 20 with a locking roll up door. Lower door opening raised to provide hand clearance.	$3,088
1535-0012	Medical cabinet mounted on the wheel well driver side of cab 45H x 21W x 24D with a locking roll-up door.	$2,317
1535-0013	Medical cabinet mounted on the wheel well officer side of cab 45H X 21W X 24D with a locking roll-up door.	$2,317
1535-0028	Cab medical storage cabinet(s) finish to be swirled with clear coating.	$1,103
1535-0030	All roll-up medical cabinet doors selected on the cab to be ROM brand.	$120
1535-0031	All medical cabinet RUD in the cab to be locking with J236 key	$125
1535-0032	All medical cabinet RUD in the cab to be locking with 1250 key	$125
1535-0034	All exterior access RUD for medical cabinets to be painted job color. Not available on two tone cabs.	$230
1535-0035	Engine compartment light, LED (EA).	$217
1535-0037	Rear cab wall medical cabinet with side access doors (one each side). Cabinet to be 50" high x 38" wide x 24" deep. Includes (2) locking roll-up doors (satin finish) and (3) adjustable shelves. Lower door openings raised to provide hand clearance.	$2,813
1535-0038	Interior medical cabinet. Locate to rear of engine cover. Cabinet to be 30" high x 38" wide x 20" deep with a locking roll up door. Includes (1) adjustable shelf.	$2,883
1535-0043	Medical cabinet mounted on rear wall of cab 48X32X24 with a locking roll up door and windows in door slats. Lower door opening raised to provide hand clearance.	$4,136
1535-0045	ALS interior - Style ''A''. Includes forward wall with center locking roll-up door for access from int, small compts up high ea side of ctr opening with glove box latch on driver's side compt and Medco keyed lock on officer's side, strikers high and low on ALS doors, access plts on int panel of ALS doors, approx 5"W x 17"H x 70"L backboard sleeve, two adj shelves ahead of backboard sleeve and a roll-out tray with 36" slides each side on floor.	$8,061
1535-0046	Medical cabinet mounted on rear wall of cab 60X40X23 with a locking roll up door. Lower door opening raised 12" to provide area for rear heaters. Includes lower ventilation, front access and removable sub-floor for additional access.	$2,931
1535-0047	Medical cabinet mounted on the officer side rear cab wall 55(54 non-vista)X18X12 with a locking roll up door. Lower door opening raised to provide hand clearance.	$2,336
1535-0048	Medical cabinet mounted on the driver side rear cab wall 55(54 non-vista)X18X12 with a locking roll up door. Lower door opening raised to provide hand clearance.	$2,336
1535-0049	Louvers for interior medical/ ALS cabinet wall(s) to help cabinet contents to maintain cab interior temperatures. The louvers to be in four sets of three, located two high and two low. Location: [#LOC].	$161
1535-0050	Medical cabinet on rear wall of cab. Reference 131288 #1-H-0468 and 1-H-07A.	$3,862
1535-0051	Compartment rear side of cab ''under riser'' type. Approx 22W x 30H opening. Includes double pan hinged door and pass through to bench if equipped. Location: driver and officer side.	$1,070
1535-0052	Medical cabinet mounted on rear wall of cab 52" x 40" x 23" with a locking roll up door. Lower door opening raised 4" to provide area for radio installation. Includes lower ventilation and removable sub-floor for additional access.	$2,931
1535-0053	ALS interior - Style 'B''. Includes forward wall with center locking roll-up door for access from int, compts up high ea side of ctr opening with glove box latch on driver's side compt and Medco keyed lock on officer's side, strikers high and low on ALS doors, access plts on int panel of ALS doors, approx 5"W x 17"H x 70"L backboard sleeve, two adj shelves ahead of backboard sleeve and a roll-out tray with 36" slides each side on floor.	$8,279
1535-0054	Exterior access roll up doors for medical cabinets to be painted upper cab color.	$230

1535-0057	Driver side cab wheel well medical cabinet approximately 42 x 22 (25 Quest) x 28. Includes external locking pan door painted job color and interior hinged full height door with locking push-button latch. Cabinet includes (2) adjustable shelves.	$2,235
1535-0058	Medical cabinet mounted on rear wall of cab 48X42X20 with angled corners and locking roll up door. Lower door opening raised to provide hand clearance.	$3,631
1535-0059	Brace .75 x 2.75 below medical cabinet shelf	$79
1535-0060	Rear cab wall medical cabinet with side access doors (one each side). Cabinet to be 62" high x 38" wide x 24" deep. Includes (2) locking roll-up doors (satin finish) and (3) adjustable shelves. Lower door openings raised to provide hand clearance.	$3,031
1535-0061	Driver side cab wheel well medical cabinet approximately 42x22(25 Quest)x28. Includes external locking pan door painted job color and interior locking roll-up door with satin finish. Cabinet includes (2) adjustable shelves.	$2,452
1535-0062	Interior medical cabinet. Locate to rear of engine cover. Cabinet to be 30" high x 38" wide x 20" deep with a locking roll up door. Includes (1) adjustable shelf and forward facing drop down door.	$2,967
1535-0063	Officer side cab wheel well medical cabinet approximately 42x22(25 Quest)x28. Includes external locking single door painted job color and interior hinged door with locking push-button latch. Cabinet includes (2) adjustable shelves.	$2,235
1535-0064	Rear cab wall medical cabinet with side access doors (one each side). Cabinet to be 48" high x 38" wide x 24" deep. Includes (2) locking roll-up doors (satin finish) and (3) adjustable shelves. Lower door openings raised to provide hand clearance.	$2,813
1535-0066	Interior medical cabinet. Locate to lower rear of engine cover. Cabinet to be 32" high x 30" wide x 24" deep with single pan double bi-fold doors. Includes (1) vertical and (1) horizontal partition centered in the cabinet, louvered lower side walls and removable lower rear facing panel for installation of heaters.	$2,911
1535-0067	ALS - Side access. Includes compts on each side of cab, access up high each side of interior outboard with glove box latches, strikers high and low on ALS doors, access plts on int panel of ALS doors, extended cab floor and three adj shelves.	$3,215
1535-0068	Rear wall medical cabinets. Includes forward wall and (2) full height, equal width locking roll-up door compts with (3) shelves in each compt.	$8,813
1535-0069	Rear cab wall medical cabinet with side access doors (one each side). Cabinet to be 50" high x 30" wide x 24" deep. Includes (2) locking roll-up doors (satin finish) and (3) adjustable shelves. Lower door openings raised to provide hand clearance.	$2,813
1535-0070	Riser for medical cabinet. Lifts bottom of cabinet up to top of rear wall seat support. Front of riser to be closed, sides to be open. CII X / Typhoon X only.	$646
1535-0071	ALS interior - Style ''A''. Includes forward wall with center locking roll-up door for access from int, small compts up high ea side of ctr opening with glove box latch on driver's side compt and Medco keyed lock on officer's side, strikers high and low on ALS doors, access plts on int panel of ALS doors, approx 5"W x 17"H x 70"L backboard sleeve, two adj shelves ahead of backboard sleeve and a roll-out tray with 36" slides each side on floor. HCFD.	$17,474
1535-0072	Rear cab wall medical cabinet with side diamond plate access doors (one each side) mounted above support channel on back wall. Cabinet to be 38" high x 47.25" wide x 14" deep. Includes diamond plate doors hinged to the rear with d-ring latches and (2) adjustable shelves.	$2,813
1535-0073	Officer side cab wheel well medical cabinet approximately 42 x 22 (25 Quest) x 28. Includes external locking pan door painted job color and interior hinged full height door with locking push-button latch. Cabinet includes (2) adjustable shelves.	$2,235
1535-0074	All medical cabinet RUD in the cab to be locking with CH751 key.	$125
1535-0075	Driver side cab wheel well medical cabinet approximately 42x22(25 Quest)x28. Includes external locking roll-up door and interior hinged door with locking push-button latch. Cabinet includes (1) adjustable partition installed and (2) adjustable shelves shipped loose in the cabinet.	$1,967
1535-0076	Driver side cab wheel well medical cabinet approximately 42x22(25 Quest)x28. Includes external pan door with locking Tri-Mark latch painted job color and interior full height hinged door with locking push-button latch. Cabinet includes (2) adjustable shelves.	$2,378
1535-0077	Officer side cab wheel well medical cabinet approximately 42x22(25 Quest)x28. Includes external pan door with locking Tri-Mark latch painted job color and interior full height hinged door with locking push-button latch. Cabinet includes (2) adjustable shelves.	$2,378
1535-0078	Interior medical cabinet. Locate to rear of engine cover. Cabinet to be 25.5" high x 30" wide x 23" deep with (2) drop down doors.	$961
1535-0079	All roll-up medical cabinet doors selected on the cab to be Amdor brand.	$120
1535-0080	Officer side cab wheel well medical cabinet approximately 42x22(25 Quest)x28. Includes external locking roll-up door. Cabinet includes (2) adjustable shelves.	$1,667
1535-0081	Driver side cab wheel well medical cabinet approximately 42x22(25 Quest)x28. Includes external locking roll-up door. Cabinet includes (2) adjustable shelves.	$1,667
1535-0083	Cabinet officer side behind officer seat with a Norcold DE-0740 refrigerator. Cabinet to include a garage style roll-up door (no lighting but wired to door ajar indicator). Wire refrigerator to operate thru shore line and during transit and on scene.	$3,442

1535-0084	Full width cabinet along upper forward vista area of cab. To include two drop down doors with push-button latching. Two LED lights to be mounted in the upper area of the cabinet. Each door to wired to door adjar indicator. Final design to be discussed with customer	$3,196
1535-0085	Rear cab wall medical cabinet with side access doors (one each side). Cabinet to be 36" high x 38" wide x 24" deep. Includes (2) roll-up doors (satin finish) and (2) adjustable shelves. Lower door openings raised to provide hand clearance.	$2,813
1535-0086	Driver and officer side cab wheel well medical cabinet approximately 17x23x28. Includes internal locking vertically hinged door. Quest cabs only.	$1,253
1535-0087	Special medical cabinet on rear wall. Includes lower area ROM door with satin finish (front lower area raised 6")and lock, (1) fixed shelf and (2) adjustable (above)-All with 1" lips all the way around, upper area with drop down down with (2) non-locking push buttons, lower sides open with cargo nets, upper side officer with vertically hinged door with Medeco3 cam lock with (2) alike keys (each unit to be keyed differently). See full design in file.	$7,849
1535-0088	Riser for medical cabinet. Approx 40"W x 20"D x 17"H. Front of riser to have a drop down door with two locking latches. Finish to match medical cabinet.	$841
1535-0089	Full width cabinet along upper rearward vista area of cab. To include three (3) lift-up doors with push-button latching (hold-opens for each as size of door permits). Each opening to include one (1) ROM LED strip light mounted in the upper area of the cabinet. Each door to wired to door ajar indicator.	$3,196
1535-0091	Officer side cab wheel well medical/communication cabinet approximately 42x22(25 Quest)x28. Includes external half height locking pan door with Tri-Mark latch painted job color and interior full height opening with cargo netting. Cabinet includes (3) adjustable interior pull-out shelves.	$2,939
1535-0092	Driver side cab wheel well medical/communication cabinet approximately 42x22(25 Quest)x28. Includes external half height locking pan door with Tri-Mark latch painted job color and interior full height opening with cargo netting. Cabinet includes (3) adjustable interior (4) sided trays with 1" lips.	$2,939
1535-0093	Compartment rear side of cab ''under riser'' type. Approx 22W x 30H opening. Includes double pan hinged door with Tri-Mark locking latches and pass through to bench if equipped. Location: driver and officer side.	$1,213
1535-0094	Driver side cab wheel well medical cabinet approximately 42x22(25 Quest)x28. Includes external pan door with locking Tri-Mark latch painted job color and interior full height opening with cargo net cover. Cabinet includes (2) adjustable shelves.	$2,526
1535-0095	Officer side cab wheel well medical cabinet approximately 42x22(25 Quest)x28. Includes external pan door with locking Tri-Mark latch painted job color and interior full height opening with cargo net cover. Cabinet includes (2) adjustable shelves.	$2,526
1535-0096	Exterior access roll up door for medical cabinet to be painted two-tone to match cab paint break (EA).	$393
1535-0097	Medical cabinet mounted on the wheel well officer side of cab 15.5X24X21 with a vertically hinged door and locking push-button latch.	$923
1535-0098	Upper forward vista area cabinet. Cabinet to be full width and height of vista area forward of rear cab doors. Includes (3) horizontally hinged lift-up doors. Outboard compartments to be approx. 12" wide.	$2,737
1535-0099	Upper rearward vista area cabinet. Cabinet to be full width and height of vista area rearward of rear cab doors. Includes (3) horizontally hinged lift-up doors. Outboard compartments to be approx. 12" wide.	$2,737
1535-0100	Medical cabinet mounted on the driver side rear cab wall 55X28X12 with a locking roll up door. Lower door opening raised 12" to provide space for rear heater. Includes lower ventilation, front access and removable sub-floor for additional access.	$2,640
1535-0101	Medical cabinet mounted on the officer side rear cab wall 55X28X12 with a locking roll up door. Lower door opening raised 12" to provide space for rear heater. Includes lower ventilation, front access and removable sub-floor for additional access.	$2,640
1535-0102	Medical cabinet - ALS style side access. Includes compt on officer side of cab, access up high on interior with glove box latch, extended cab floor and three adj shelves. Includes pass-thru under bench seat riser if equipped.	$2,277
1535-0103	Compartment rear side of cab ''under riser'' type. Approx 22W x 30H opening. Includes double pan hinged door and pass through to bench if equipped. Location: driver side.	$1,070
1535-0104	Medical cabinet mounted on the driver side rear cab wall with a locking roll up door. Cabinet to be approx 53H x 18W x 12D. Bottom of exterior opening just above rear seat channel. Includes 2 adj shelves in upper area, false floor at top of seat channel and interior door below false floor. Interior door to be vert hinged on inboard side.	$3,319
1535-0105	Medical cabinet mounted on the officer side rear cab wall 55(54 non-vista)X18X12 with a locking roll up door. Lower door opening raised approx. 12" to provide space for rear wall heaters. Includes louvers and false floor.	$2,336
1535-0106	Medical cabinet mounted on the driver side rear cab wall 55(54 non-vista)X18X12 with a locking roll up door. Lower door opening raised approx. 12" to provide space for rear wall heaters. Includes louvers and false floor.	$2,336
1535-0109	Compartment rear side of cab below floor. Approx 22W x 19.5H opening. Includes double pan hinged door with Tri-Mark latch. Location: driver and officer side.	$1,213

1535-0110	Medical cabinet mounted on the driver side rear cab wall 55(54 non-vista)X20X22 with a locking satin finish roll-up door and (3) adjustable shelves.	$2,444
1535-0111	Medical cabinet mounted on the officer side rear cab wall 55(54 non-vista)X20X22 with a locking satin finish roll-up door and equipment rack.	$2,444
1535-0112	Officer side cab wheel well medical cabinet approximately 42x22(25 Quest)x28. Includes external locking pan door painted job color and interior locking roll-up door with satin finish. Cabinet includes (2) adjustable shelves.	$2,452
1535-0114	Medical cabinet mounted on the wheel well driver side of cab 44HX21WX16D with a locking roll up door.	$2,248
1535-0116	Equipment bag storage rack; finish to match cab interior. Location: officer side rear wall medical cabinet.	$225
1535-0117	Medical cabinet(s) interior finish and components (shelves/trays) to match interior cab finish.	$225
1535-0118	Medical cabinet mounted on rear wall of cab 50X38X12 with locking roll up door. Lower door opening raised to provide hand clearance.	$3,558
1535-0119	Medical cabinet mounted on rear wall of cab 55X40X23 with a locking roll up door. Cabinet floor to be level with top of PTO box on cab floor.	$2,931
1535-0120	Medical cabinet mounted on the officer side rear cab wall full height (as applicable)X 18W X 12D with a locking roll up door. For use with vista cabs only. Lower door opening raised to provide hand clearance.	$2,434
1535-0121	Medical cabinet mounted on rear wall of cab full height (as applicable)X55X22 with locking roll up door. For use with vista cabs only. Lower door opening raised to provide hand clearance.	$3,926
1535-0122	Medical cabinet mounted on the driver side rear cab wall full height (as applicable)X 18W X 12D with a locking roll up door. For use with vista cabs only. Lower door opening raised to provide hand clearance.	$2,434
1535-0123	Full width cabinet along upper forward vista area of cab. To include three (3) lift-up doors with push-button latching (hold-opens for each as size of door permits). Each opening to include one (1) ROM LED strip light mounted in the upper area of the cabinet. Each door to wired to door ajar indicator.	$3,196
1535-0124	Medical cabinet mounted on the driver side rear cab wall 55(54 non-vista)X20X22 with a locking satin finish roll-up door and (3) adjustable shelves. Includes lower area raised to accomodate rear wall heater.	$2,446
1535-0125	Medical cabinet mounted on the officer side rear cab wall 55(54 non-vista)X20X22 with a locking satin finish roll-up door, (1) adjustable shelvf and equipment rack. Includes lower area raised to accomodate rear wall heater.	$2,446
1535-0126	Medical cabinet mounted on the wheel well driver side of cab 32H x 21W x 24D with a interior hinged full height door with locking push-button latch; hinged inboard.	$1,973
1535-0127	Louvers for rear wall bench seat riser to help cabinet contents to maintain cab interior temperatures. The louvers to be in three sets of three, located low on forward wall.	$161
1535-0128	ALS - Side access. Includes compts on each side of cab, 16Wx20H access up high each side of interior outboard with locking glove box latches, strikers high and low on ALS doors, access plts on int panel of ALS doors, extended cab floors, smooth plate rear kick plates, one adj shelf and nylatron floor overlay. Includes pass-thru under bench seat if equipped.	$3,215
1535-0129	Reverse hinge driver and officer side ALS compartment door. Includes vertically mounted drip rail along forward area of compartment opening (in addition to the horizontal drip rail above the door opening). Doors to open approx. 110 degrees.	$138
1535-0130	Driver side cab wheel well medical cabinet approximately 42 x 22 (25 Quest) x 28. Includes external locking roll-up door and interior hinged door with locking push-button latch; hinged outboard. Cabinet includes (2) adjustable shelves.	$1,863
1535-0131	Driver side cab wheel well medical cabinet approximately 42 x 24 (27 Quest) x 28. Includes external locking roll-up door and interior hinged door with locking push-button latch. Cabinet includes (2) adjustable shelves.	$1,863
1535-0132	Officer side cab wheel well medical cabinet approximately 42 x 24 (27 Quest) x 28. Includes external locking roll-up door and interior hinged door with locking push-button latch. Cabinet includes (2) adjustable shelves.	$1,863
1535-0133	Cab medical/storage cabinet(s) interior finish to be Zolatone gray.	$332
1535-0134	All roll-up medical cabinet doors selected on the cab to be Gortite brand.	$212
1535-0135	Driver side cab wheel well medical cabinet approximately 42 x 22 (25 Quest) x 28. Includes external locking roll-up door and interior hinged smoked lexan door with locking push-button latch. Cabinet includes (2) adjustable shelves.	$1,912
1535-0136	Rear cab wall medical cabinet with front and side access doors (one each side). Cabinet to be 42" high x 30" wide x 32" deep (do not notch for support bracket; customer to store backboard(s) above support channel behind cabinet; install mounting bracket above cabinet). Includes (1) locking lower horizontally hinged plate door on front located below roll-up door drums, (2) locking side roll-up doors (satin finish) and (2) adjustable shelves. Lower door openings raised to provide hand clearance.	$3,109
1535-0137	Medical cabinet mounted on the wheel well driver side of cab 45H x 21W x 24D with a locking roll-back (bread box) door.	$2,317

1535-0138	Lock box mounted in the driver side wheel well medical cabinet floor. 14X21X20 with a locking horizontally hinged door. Finish will match interior of cab.	$546
1535-0139	ALS interior with backboard and stokes basket storage. Includes forward wall with (2) outboard locking roll-up doors for access from int, (3) compts up high with glove box latches, strikers high and low on ALS doors, access plts on int panel of ALS doors, (2) approx 5"W x 17"H x 70"L backboard sleeves and stokes basket storage below backboard sleeves on floor.	$8,749
1535-0140	Medical cabinet mounted on the officer side rear cab wall 55(54 non-vista)X18X12 with a locking full height door hinged inboard.	$2,139
1535-0141	Medical cabinet mounted on the driver side rear cab wall 55(54 non-vista)X18X12 with a locking full height door hinged inboard.	$2,139
1535-0143	Lock box mounted on top of the rear wall medical cabinet. 14HX18WX12D with a locking horizontally hinged drop down door. Finish will match interior of cab.	$546
1535-0145	ALS - Side access. Includes compts on each side of cab, strikers high and low on exterior doors, access plts on int panel of exterior doors, full height satin finish Amdor roll-up doors on interior, extended cab floor and three adj shelves.	$4,716
1535-0146	Upper rearward vista area cabinet. Cabinet to be between full height exterior ALS style cabinets and the same height of vista area. Includes (1) horizontally hinged lift-up door.	$1,837
1535-0147	Officer side cab wheel well medical/communication cabinet approximately 42x22(25 Quest)x28. Includes external half height locking pan door with Tri-Mark latch painted job color and interior full height opening with cargo netting. Cabinet includes (1) adjustable shelf.	$2,798
1535-0148	All medical cabinet RUD in the cab to be locking with GEM key lock	$125
1535-0149	Officer side cab wheel well medical cabinet approximately 42x24x28. Includes external locking pan door painted job color and raised boxed interior locking roll-up door with satin finish for a 42" opening. Cabinet includes (2) adjustable shelves. Requires vista cab roof and removal of side windows.	$2,645
1535-0150	Medical cabinet mounted on the wheel well officer side of cab 45H x 21W x 24D with a interior hinged full height door with locking push-button latch; hinged inboard.	$1,973
1535-0151	Upper forward center vista area cabinet. Cabinet to be 40W x Vista Height x 12D at lower area (depth will taper with vista). Includes horizontally hinged lift-up door.	$837
1535-0153	Medical cabinet mounted on rear wall of cab 48 x 36 x 20 with a locking roll-back (bread box) door.	$3,631
1535-0154	Medical cabinet mounted on the wheel well driver side of cab 45H x 21W x 24D with a interior hinged full height door with locking push-button latch; hinged inboard.	$1,973
1535-0155	Medical cabinet mounted on the wheel well driver side of cab 45H x 21W x 24D with a locking roll-up door and (2) adjustable shelves.	$2,317
1535-0156	Medical cabinet rear engine cover, bolted to forward facing map box approximately 34Wx25Hx18D. To include one (1) adjustable shelf. Two (2) vertically hinged swing out doors shall allow access (to the rear), the doors shall be raised 6" up from the cabinet's base. The cabinet shall include push-button latching, (2) each door (1) top and (1) bottom.	$1,295
1535-0157	ALS - Side access. Includes compts on each side of cab, strikers high and low on exterior doors, access plts on int panel of exterior doors, satin finish ROM roll-up doors on interior (bottom raised to riser height), extended cab floor and three adj shelves	$4,909
1535-0158	Locking interior medical cabinet plate door (PR). Key type to be 1250.	$138
1535-0159	Medical cabinet mounted on the wheel well officer side of cab 22X21X28 with a vertically hinged door and locking push-button latch.	$923
1535-0160	ALS - Side interior cabinets. Includes full height access doors (raised for heaters if equipped) each side of interior outboard with glove box latches and three adj shelves.	$3,215
1535-0161	Compartment rear side of cab ''under riser'' type. Approx 22W x 30H opening. Includes double pan hinged door. For use with heaters below bench seat (No pass-through). Location: driver and officer side.	$1,070
1535-0162	Officer side cab wheel well medical cabinet approximately 42 x 24 (25 Quest) x 28. Includes external locking roll-up door and interior cargo net access. Cabinet includes (2) adjustable shelves.	$1,911
1535-0163	Driver side cab wheel well medical cabinet approximately 42 x 24 (25 Quest) x 28. Includes external locking roll-up door and interior cargo net access. Cabinet includes (2) adjustable shelves.	$1,911
1535-0164	Compartment rear side of cab. Approx 8.75"W x 25"H opening. Includes a 3/16" smooth plate doors painted job color with quarter turn D-ring latch. Cut floor in cab to accommadate the height. Location: driver side.	$816
1535-0165	Compartment rear side of cab. Approx 8.75"W x 25"H opening. Includes a 3/16" smooth plate doors painted job color with quarter turn D-ring latch. Cut floor in cab to accommadate the height. Location: officer side.	$816
1535-0166	The bottom of the medical cabinet(s) within the cab shall have stainless steel trim at the bottom. This kick plate trim shall be 4" in height from the floor and shall be trimmed as required for door opening(s) below 4".	$372
1535-0167	Compartment rear side of cab below floor. Approx 9W x 19.5H opening. Includes double pan hinged doors. Long cab with medium door location only. Location: driver and officer side.	$855
1535-0169	Medical cabinet mounted on rear wall of cab 55X38X16 with a locking roll up door. Lower door opening raised to provide hand clearance.	$2,931

1535-0170	Cab compartment - (1) each side rear of front wheels and below the cab transverse compartment. Approx 18 wide x 10.75 tall. To have an aluminum door with D-Ring (non-locking), slam latch, hinged to the front. Door design must seal the compartment, to secure and protect medical equipment.	$1,213
1535-0172	Rear cab wall medical cabinet to be 50" high x 38" wide x 24" deep. Includes (1) forward facing locking roll-up door (satin finish) and (3) adjustable shelves. Lower door openings raised to provide hand clearance.	$2,813
1535-0173	ALS - Side access. Includes compartments on each side of cab, strikers high and low on exterior doors. Includes access plates on interior panel of exterior doors, satin finish ROM roll-up doors on interior (bottom raised to riser height), extended cab floor and three adjustable shelves. Cabinet Includes transverse riser with backboard storage. The interior riser jets/protrudes forward between side wall ALS cabinets to allow heaters (if so equipped) not interfere or impede upon transverse storage/ pass-thru of backboards and other equipment stored under the riser in the transverse storage area.	$5,274
1535-0174	ALS door locks - electric. Electric lock for hinged ALS doors. Wire to same electric lock system as other cab doors.	$863
1535-0175	Medical cabinet mounted on rear wall of cab 49 x 40 x 25.5. Side access lower section with cargo net and notch upper forward access with discrete compartment. Includes drop down door.	$3,151
1535-0176	Medical cabinet mounted on rear wall of cab approximately 48 x 38 x 20 with locking roll up door. Lower door opening raised to provide hand clearance. Required with rear outboard fold down seat(s).	$3,631
1535-0177	Compartment rear side of cab ''under riser'' type. Approx 9W x 30H opening. Includes double pan hinged door and pass through to bench if equipped. Long cab with medium door location only. Location: driver and officer side.	$855
1535-0178	Compartment rear side of cab below floor. Approx 22W x 21H opening. Includes double pan hinged door. Location: driver and officer side.	$1,070
1535-0181	Upper rearward center vista area cabinet. Cabinet to be 48W x Vista Height x 12D. Includes horizontally hinged lift-up door.	$837
1535-0182	Officer side cab wheel well medical cabinet approximately 42 x 24 (27 Quest) x 28. Includes external locking roll-up door and interior cargo net access. Cabinet includes (2) adjustable shelves.	$1,911
1535-0183	Driver side cab wheel well medical cabinet approximately 42 x 24 (27 Quest) x 28. Includes external locking roll-up door and interior cargo net access. Cabinet includes (2) adjustable shelves.	$1,911
1535-0184	Medical cabinet mounted on rear wall of cab 55 x 38 x 20 with a locking roll up door. Lower door opening raised to provide hand clearance.	$3,088
1535-0185	Two (2) compartments rear side of cab below floor (1) driver and (1) officer. Approx 22W x 19.5H opening. Each includes a double pan hinged door with a Tri-Mark latch.	$2,424
1535-0186	Medical cabinet mounted on rear wall of cab 48 x 40 x 17 with locking roll up door. Lower door opening raised to provide hand clearance.	$3,631
1535-0187	Driver side cab wheel well medical cabinet approximately 42 x 24 (25 Quest) x 28. Includes external locking roll-up door and interior hinged door with locking push-button latch. Cabinet includes (2) adjustable shelves.	$1,863
1535-0188	Officer side cab wheel well medical cabinet approximately 42 x 24 (25 Quest) x 28. Includes external locking roll-up door and interior hinged door with locking push-button latch. Cabinet includes (2) adjustable shelves.	$1,863
1535-0190	All shelves within the medical cabinet(s) shall have the a full perimeter lip IPOS.	$56
1535-0191	All exterior access RUD for medical cabinets to be painted [#COL].	$230
1535-0193	Medical cabinet mounted on the wheel well officer side of cab 15.5X24X21 with rear facing cargo netting.	$923
1535-0194	Driver side cab wheel well medical cabinet approximately 42 x 22 (25 Quest) x 28. Includes external locking roll-up door and interior hinged door with locking push-button latch.	$1,670
1535-0195	Officer side cab wheel well medical cabinet approximately 42 x 22 (25 Quest) x 28. Includes external locking roll-up door and interior hinged door with locking push-button latch.	$1,670
1535-0196	Interior medical cabinet. Locate to rear of engine cover. Cabinet to be 27" high x 38" wide x 20" deep with a locking roll up door. Includes (1) adjustable shelf and forward facing drop down door.	$2,967
1535-0197	Driver side cab wheel well medical cabinet approximately 42x22(25 Quest)x28. Includes external lift-up pan door with locking Tri-Mark latch painted job color, pull strap for door and interior full height opening with cargo net cover. Cabinet includes (2) adjustable shelves.	$2,848
1535-0198	Officer side cab wheel well medical cabinet approximately 42x22(25 Quest)x28. Includes external lift-up pan door with locking Tri-Mark latch painted job color, pull strap for door and interior full height opening with cargo net cover. Cabinet includes (2) adjustable shelves.	$2,848
1535-0199	Officer side cab wheel well medical cabinet approximately 42x22(25 Quest)x28. Includes external locking pan door painted job color and interior cargo net.	$2,383
1535-0200	Driver side cab wheel well medical cabinet approximately 42x22(25 Quest)x28. Includes external locking pan door painted job color and interior cargo net.	$2,383

1535-0205	Medical cabinet centered on the rear wall of the cab to be 74" wide X 62" tall. The center section on the cabinet will be 22" deep X 25" wide. At the outside edges of the 25" wide section of the cabinet will angle back until it is 10" deep at the outer most point on both sides. The cabinet is to be split into 3 separate sections with each section having (2) adjustable shelves and a locking ROM roll-up doors. Lower door opening raised to provide hand clearance.	$6,586
1540-0001	Map box dual storage	$507
1540-0005	Map Box Rectangular Tall	$476
1540-0006	Map box suspended with drop-down doors.	$523
1540-0007	Map Box with Angle Storage. Angled side to face officer.	$450
1540-0008	Map box suspended with officer's map storage.	$631
1540-0014	All map boxes in the cab to be swirled with clear coat	$523
1540-0015	Map box suspended with drop-down door. Box offset to rear to allow engine access door to open further.	$523
1540-0016	Map box suspended with officer front drop down door with (4) slots and driver rear drop down door with (4) slots.	$620
1540-0017	Map box with angled top on rear of engine cover.	$516
1540-0018	Map Suspended with Officer's Map Storage. (6) storage slots for 4" binders, (1) additional storage slot for county custom map book.	$631
1540-0020	Map box with 3 compartments on rear of engine cover. Forward compartment has angle lift-up door with gas shocks. Rear of box has top and rear compartments with hinged doors.	$1,058
1540-0021	Map box suspended 34" wide with (3) drop down doors.	$620
1540-0022	Map / medical box on rear of engine cover. Officer's side front has map box w/drop down door. Rear has two compts w/vert hinged doors. Left side includes one adj shelf.	$1,918
1540-0023	Map box suspended rear facing with drop down door. Box offset to rear to allow engine access door to open further.	$523
1540-0024	Map / medical box on rear of engine cover. Front has 2 map boxes w/3 horz slots ea and drop down doors. Rear has 2 compts w/vert hinged doors.	$2,137
1540-0025	Map box suspended with officer's map storage.	$631
1540-0026	Locking map box door. Map box door to include a locking push-button latch. Key type to be CH751.	$72
1540-0027	Map box suspended with officer front drop down door with (4) slots and driver rear drop down door with (2) slots.	$620
1540-0028	Map box suspended with full width lower storage and officer's map storage.	$631
1540-0030	Map Box Rectangular. Front storage area with hinged lid and push button latch, to have (3) equal storage spaces. Center mounting area. Rear storage area with hinged lid and push button latch, to have (2) equal storage spaces.	$450
1540-0031	Map Box Suspended with Drop Down Door 17H x 34W x 14D. Box offset to rear to allow engine access door to open further.	$632
1540-0032	Map box suspended with driver's map storage.	$631
1540-0033	Map Box located on rear of engine cover to be approx 45"L x 13.5" W x 11.5"D.	$1,239
1540-0034	Map box suspended 37" wide with (3) drop down doors.	$620
1540-0035	Rear engine cover rectangular map box 12H X 13.75W X 31L. Includes (3) slots driver, open center, (2) slots officer side and cargo net cover.	$871
1540-0036	Storage box with hinged top with push-button latch. Box to be mounted to rear of engine cover and to rear of map box (hinge to forward edge). Size: 27" h x 34" w x 12" d	$402
1540-0037	Map box suspended with drop-down doors, 15" H x 37.5" W x 14" D.	$523
1540-0038	Storage box with sliding aluminum plate doors. The doors to be secured with a tethered push-button ball pin fastener. Box to be mounted rear facing on rear of engine cover. Size: 27" H x 34" W x 12" D outside dimensions.	$1,202
1540-0039	Map box / rear engine cover medical cabinet. Includes forward facing map box with 2 drop down doors and incorporated rear engine cover medical cabinet with roll-up door.	$4,028
1540-0040	Map box suspended with drop down doors. 34"W x 10"H x 12"D	$523
1540-0041	Map box OCFA. Located in the crew area between the wheel wells on the upper engine cover rear of the 3X3.	$921
1540-0042	Map box suspended with driver and officer front drop down door and officer rear drop down door. Includes (4) slots on officer side and map storage on driver side.	$725
1540-0045	Map box rectangular with rear hinged door. 11"L (front to rear) x 20"W (side to side) x 6"D.	$450
1540-0046	Map box binder storage approx. 13"H x 11"W x 4" front to back. Location: (1) each side on interior wall of medical cabinet walls. Includes lid with mechanical latch. To match cab interior color.	$494
1540-0047	Map box with 3 compartments on rear of engine cover. 2 compartments on top will be hinged back to back. Forward compartment has lift-up door with gas shocks. Rear of box has top and rear compartments with hinged doors. Lower compartment will be approx 7" high.	$1,058
1540-0049	Map box suspended with drop down doors. Driver door approx. 15.5"W, officer door approx. 19.5"W. 35"W x 11"H x 13.5"D. (1) vertical partition 4" off officer side, (1) shelf offset to driver side of partition.	$523
1540-0050	Storage box with hinged top and push-button latch. Box to be mounted on rear of engine cover (hinge to forward edge), angled same as upper engine cover. Size: 15"H x 35"W x 7"D. Quest cabs only.	$402
1540-0051	Map box suspended with drop-down doors. 34"W x 9.50"H x 12"D.	$523

1540-0052	Auto Pulse storage box with hinged top and push-button latch. Box to be mounted on floor rear of engine cover (hinge to forward edge), angled same as lower engine cover. Size: 12"H x 44"W x 8"D(bottom)/11"D(upper).	$523
1540-0053	Rear lower engine cover mounted storage box. To be approx. 44" W x 8" H x 12" D. Includes (3) equally spaced dividers. Includes cargo net cover.	$871
1540-0054	Map box with two (2) compartments on rear of engine cover. Upper compartment to have lift-up door with one (1) hold-open and latch. Lower compartment to have drop down door with latch (accessible from the rear of the box).	$1,058
1540-0056	Rear engine cover rectangular map box angled to match upper and lower vertical engine cover. 11"H X 12"W (front to rear) X 42.5"L. Includes (6) storage slots approx. 14"L x 6"W with (3) retaining straps front to rear, (1) over each area.	$871
1540-0057	Map box suspended with driver and officer front and rear drop down doors. Includes (4) slots on each side.	$725
1540-0060	Storage box with hinged top with push-button latch. Box to be mounted to rear of engine cover and to rear of map box (hinge to forward edge). Size: 17H x 34W x 12D.	$402
1540-0063	Map box suspended with (9) vertical slots.	$631
1540-0064	Map box suspended with (9) vertical slots and (1) full width horizontal slot.	$725
1540-0065	Map box suspended 37" wide with (3) drop down doors.	$718
1540-0066	Map box suspended with officer's map storage. Includes (4) equal slots on officer side and (1) driver slot equal to top officer slot.	$631
1540-0068	Storage box with hinged top with push-button latch. Box to be mounted on the forward engine cover (hinge to forward edge). Size: 6"H x 20"W x 11"D(front to rear). Includes partition approx. 5.75" from driver side. Box to match cab interior.	$402
1540-0069	Map box suspended 34"W x 6"H x 12"D with driver and officer front and rear drop down doors. Includes (2) slots on each side. Locate just below AC.	$725
1540-0070	Rear lower engine cover mounted storage box. To be approx. 44" W x 12" H x 12" D. Includes (1) center side to side divider with cargo net cover.	$871
1540-0071	Map box suspended with (1) drop down door. 14"W x 9.5"H x 12"D	$484
1540-0072	Map Box with Angle Storage. Angled side to face officer. Includes single divider between angle storage and deep storage. Located on forward engine cover.	$450
1540-0073	Map box suspended with drop-down doors and (1) shelf each side. 34"W x 9.50"H x 12"D.	$523
1540-0075	Map box suspended with drop down doors. 34"W x 6"H x 13.5"D	$523
1540-0077	Rear storage box on rear engine cover. Open box with forward hinged diamond plate lid and push-button latches. Box size shall be 44" wide X 12" deep X 8" high.	$523
1540-0079	Map box suspended with drop-down doors. Approximately 34"W x 9.50"H x 13"D.	$716
1540-0080	Map box suspended with drop-down door installed on the rear of the box to provide accessibility from the rear. Box offset to rear to allow engine access door to open further.	$523
1550-0001	Map pockets cab front doors diamond plate	$170
1550-0002	Map pockets cab front doors stainless steel.	$139
1550-0007	All cab exterior access doors to have CH751 keyed locks.	$167
1550-0008	Fixed rear cab wall windows (pr). Not available with side mount pump module applications.	$110
1550-0009	Fixed rear cab wall narrow windows (pr).	$107
1550-0010	Sliding rear cab wall windows (pr). Windows are drop style and not available with side mount pump module applications.	$244
1550-0011	Rear crew cab door windows. Includes manual roll-down actuation. Not available with paddle style door latching.	$1,004
1550-0013	Driver and Officer door windows. Includes electric roll-down actuation. Each door to be individually controlled and the driver side is to have control for all electrically actuated windows.	$1,391
1550-0014	Rear crew cab door windows. Includes electric roll-down actuation. Each door to be individually controlled. Not available with paddle style door latching.	$1,391
1550-0015	Stainless steel protective trim on rear edge of cab door openings. E-ONE custom chassis only.	$212
1550-0017	Cab door panels stainless steel.	$1,241
1550-0018	Scuff plates stainless steel (Set). Not available with paddle latches.	$98
1550-0019	Windows cab side sliding driver side.	$250
1550-0022	Cab roof vent with fan (pair). Each vent switched next to vent. Location: (1) each side centered above rear cab doors.	$760
1550-0023	Windows rear sliding vista. Requires raised roof option	$412
1550-0024	All cab doors shall have exterior paddle latches.	$579
1550-0029	Map pockets cab rear doors diamond plate	$146
1550-0030	Map pockets cab rear doors, stainless steel.	$177
1550-0032	Windows cab side sliding officer side.	$250
1550-0037	(4) Incandescent cab step area lighting. Locate each light in [#LOC]. Lights to be switched with door ajar.	$146
1550-0038	(4) LED cab step area lighting. Locate each light [#LOC]. Lights to be switched with door ajar.	$575
1550-0039	Door mounted red incandescent flashing lights (4). Locate lights [#LOC]. Lights to be switched with door ajar.	$146
1550-0040	Door mounted red LED flashing lights (4). Locate lights [#LOC]. Lights to be switched with door ajar.	$345

1550-0041	Door mounted amber incandescent flashing lights (4). Locate lights [#LOC]. Lights to be switched with door ajar.	$146
1550-0042	Door mounted amber LED flashing lights. Locate lights [#LOC]. Lights to be switched with door ajar.	$345
1550-0043	All cab door kick plates to be made from smooth plate aluminum with DA finish.	$283
1550-0045	All cab door kick plates to be made from stainless steel plate.	$593
1550-0046	Canadian flag reflective material in place of striping for lower interior cab doors.	$85
1550-0047	All (4) cab doors to have double strap. Straps to be sewn together.	$138
1550-0050	All cab exterior cab locks to be keyed for #CH751 locks. Orange County.	$248
1550-0052	Federal LED Delta Ray amber/red warning lights, bottom of cab doors (interior), wired to door switches.	$1,716
1550-0053	Aluminum interior rear cab door handrails (PR) IPOS.	$309
1550-0054	All cab exterior access doors to have 1250 keyed locks.	$537
1550-0055	Door mounted Whelen 500 series red TIR6 LED flashing lights (4) w/clear lenses. Locate lights [#LOC]. Lights to be switched with door ajar.	$1,156
1550-0056	Cab door insert (ea) - Carbon fiber style. Quest cab only.	$215
1550-0057	Cab door insert (ea), stainless steel. Quest cab only.	$316
1550-0061	Rear crew cab door window. Includes electric roll-down actuation. Not available with paddle style door latching. For use with 3 door cab only.	$697
1550-0063	(3) LED cab step area lighting. Locate each light in [#LOC]. Lights to be switched with door ajar.	$432
1550-0066	Cab door kickplates fastened with screws.	$220
1550-0067	[#COL] chevron "V" stripe on lower cab door panel approx 18" high. Stainless steel door panels only. CIIX and TyphoonX only.	$274
1550-0069	Reflective [#COL] 3M Diamond Grade striping positioned in the "A" formation located in the lower cab door panels.	$277
1550-0070	All (4) cab doors to have double door straps. Straps to be long enough to allow the door to open to a max of 90 degrees.	$274
1550-0071	ABS cab door panels and lower kick panels to be fastened with screws. No drive rivets.	$367
1550-0072	Cab door panels aluminum painted Zolatone gray.	$1,241
1550-0073	[#COL] chevron "A" printed stripe on lower cab door panel approx 18" high. Stainless steel door panels only. CIIX and TyphoonX only.	$274
1550-0074	[#COL] chevron "A" stripe on entire lower cab door kick plate. Stainless steel or smooth plate kick plates only. CIIX and TyphoonX only.	$274
1550-0075	Door mounted red LED flashing lights (3). Locate lights [#LOC]. Lights to be switched with door ajar.	$259
1550-0078	Map pockets 14 gauge stainless steel. Includes vinyl trim around top of opening and nylon strap with snap to retain contents. Location: front cab doors.	$375
1550-0079	Rubrail Guard with endcaps for cab door strip lights.	$365
1550-0080	[#COL] chevron "A" printed stripe on lower cab door panel approx 12" high. Stainless steel door panels only. CIIX and TyphoonX only.	$274
1550-0081	Cab door locks - electric. Includes driver side exterior touchpad, (2) remote key fobs, barrel style key lock on exterior of each door and manual interior lock on each door.	$1,104
1550-0085	All cab exterior access doors to have J236 keyed locks.	$537
1550-0086	Door mounted red LED flashing lights (2). Locate lights [#LOC]. Lights to be switched with door ajar.	$174
1550-0087	[#COL] Diamond Grade chevron "A" stripe on lower cab door panel approx 12" high. Stainless steel door panels only. CIIX and TyphoonX only.	$454
1550-0088	[#COL] chevron 2" "A" stripe on lower cab door panel approx 12" high. Stainless steel door panels only. CIIX and TyphoonX only.	$274
1550-0095	One touch down operation for cab door electric windows.	$2,339
1550-0096	Door mounted Whelen amber M6AC LED flashing lights (4) w/clear lenses. Lights to alternate flash top and bottom on each light. Locate lights [#LOC]. Lights to be switched with door ajar.	$1,240
1550-0097	Nader pin guards on front cab doors to match rear cab doors.	$124
1550-0098	Stainless steel protective trim on rear edge of cab door openings. E-One Quest chassis only.	$212
1550-0099	Scuff plates stainless steel (Set). Approx. 7"x7" to encompass door handle and lock. Not available with paddle latches.	$212
1550-0100	Polished stainless steel protective trim on rear edge of cab door openings. E-ONE custom chassis only.	$234
1550-0101	Polished stainless steel scuff plates for exterior cab door handles (set). Not available with paddle latches.	$102
1550-0102	Rear crew cab door windows with rear fixed panel. Includes electric roll-down actuation. Each door to be individually controlled. For use with paddle style door latching.	$1,559
1550-0103	Rear crew cab door windows with rear fixed panel. Includes manual roll-down actuation. For use with paddle style door latching.	$1,172
1550-0106	[#COL] chevron "A" stripe on lower cab door panel approx 24" high. Stainless steel door panels only. CIIX and TyphoonX only.	$274
1550-0107	[#COL] chevron "A" stripe on lower cab door panel approx 6" high. Stainless steel door panels only. CIIX and TyphoonX only.	$195
1550-0108	Stainless steel protective trim on rear edge of rear cab door openings. E-ONE custom chassis only.	$106
1550-0109	[#COL] Diamond Grade chevron "A" stripe on lower cab door panel approx 18" high. Stainless steel door panels only. CIIX and TyphoonX only.	$454

1550-0114	Map pockets cab front doors aluminum plate painted Zolatone gray.	$159
1550-0115	Map pockets cab rear doors aluminum plate painted Zolatone gray.	$159
1550-0116	Cab door locks - electric; 2DR cab only. Includes driver side exterior touchpad, (2) remote key fobs, barrel style key lock on exterior of each door and manual interior lock on each door.	$853
1550-0117	Scuff plates stainless steel (PR) door lock. For use with paddle latches.	$50
1550-0120	Door panels cab alum painted Zolatone black.	$1,241
1550-0121	Cab door strap one (1) additional to standard straps shall be provided. Location: One (1) each cab door.	$133
1550-0127	Door mounted Whelen M4RC LED flashing lights (4) w/clear lenses. Locate lights [#LOC]. Lights to be switched with door ajar.	$1,137
1550-0128	(4) Whelen LED cab step area lighting. Locate each light [#LOC]. Lights to be switched with door ajar.	$746
1550-0129	Enclosures for electric door window actuation switch(s) shall be stream lined, (1) switch behind another (not side by side) mounted in an enclosure to match the door's interior IPOS. Each door to be individually controlled. The driver shall have control for all electrically actuated windows.	$218
1550-0130	Stainless steel protective trim on rear edge of rear ALS cab door openings. E-ONE custom chassis only.	$106
1550-0131	Removable access panel on each cab door to the regulator and latch.	$468
1550-0132	Driver and Officer door windows. Includes electric roll-down actuation. Each window to be individually controlled at each door. Each window switch will be flush mounted as far forward on the door as possible with minimal or no switch mounting protrusion. The driver side will NOT have controls for all electrically actuated windows but rather a single switch for the driver door window only.	$1,585
1550-0134	Polished stainless steel trim on bottom edge of the over wheel cab compartment opening (ea).	$32
1550-0135	Stainless steel trim on the vertical edge of the over wheel cab compartment opening (ea).	$44
1550-0136	Polished stainless steel trim on the vertical edge of the over wheel cab compartment opening (ea).	$58
1550-0137	A removable access panel shall be incorporated into the interior cover panel(s) of each cab door to permit easy access to the latch mechanism.	$468
1550-0138	Door mounted Whelen M2 red super LED flashing lights (4). Locate lights on each cab door in the outboard position. Each individual light shall be activated by the corresponding cab door ajar circuit.	$1,017
1550-0139	Each cab door shall have stainless steel trim on the trailing edge of the door to include forward door wheel well (radius) area. E-ONE custom chassis only.	$366
1550-0140	Reflective [#COL] 3M Diamond Grade striping positioned in the "A" formation located in the lower cab door panels, extending approximately 14" from the door's bottom.	$323
1550-0141	Polished stainless steel protective trim to wrap cab door jambs on all (4) entry doors. Trim to extend 3" past closed door edge. E-One custom chassis only.	$1,046
1550-0142	The cab door inserts shall have the fastening hardware upgraded to nutserts and stainless steel hardware IPOS.	$53
1550-0143	Reflective [#COL] 3M Diamond Grade striping positioned on the upper SS insert IPO lower door area.	$415
1550-0144	Reflective [#COL] individual striping positioned in the "A" formation located in the lower cab door panels.	$201
1550-0145	[#COL] chevron "A" individual stripes on lower cab door panel approx 18" high. Stainless steel door panels only. CIIX and TyphoonX only.	$304
1550-0146	[#COL] chevron "A" individual stripe on lower cab door panel approx 12" high. Stainless steel door panels only. CIIX and TyphoonX only.	$304
1550-0147	Location - Front door map pockets shall be located approximately 17" below window.	$94
1615-0000	Vista cab 20" with extension for top mount pump panel controls. Includes 4" cap for additional headroom. Note: "Delete down view window" option required with full width pump module.	$9,712
1615-0001	Vista full height rear doors, 12".	$3,314
1615-0002	Vista full height rear doors 16".	$3,469
1615-0003	Vista full height rear doors 20".	$3,625
1615-0013	Vista cab 20" with extension for top mount pump panel controls. Note: "Delete down view window" option required with full width pump module.	$9,276
1615-0015	Diamond plate overlay front of vista slope.	$436
1615-0019	Vista full height rear doors 20". Includes 4" cap for a 24" total raised roof.	$4,921
1615-0020	Side vista roof windows behind rear doors. 80" cab with medium doors only.	$110
1620-0000	Overlay the painted grille with stainless steel	$311
1620-0002	Stainless steel grille for Typhoon X.	$822
1620-0003	Stainless steel grille for Typhoon	$822
1620-0006	CIIX stainless steel grille for Typhoon X.	$822
1640-0000	Step below cab door. Located [#LOC]. Steps under front cab doors shall not interfere with approach angle.	$211
1640-0009	Steps below front cab door - CFR swing style (PR). Includes plunger stop to hold in the down position. Step to be centered below cab step.	$858
1640-0016	Step below cab door; stirrup style without back wall. Located [#LOC]. Steps under Front Cab doors shall not interfere with Approach Angle.	$211

1640-0018	Step below cab door; smooth plate with gator grip painted black durabak. Located [#LOC]. Steps under front cab doors shall not interfere with approach angle.	$277
1640-0025	Steps below front cab door - CFR swing style (PR) painted black Durabak. Includes plunger stop to hold in the down position. Step to be centered below cab step.	$925
1640-0026	Removable bottom panel on cab steps.	$199
1640-0028	Step below cab door Zico VS-20-5 elect swing out/down. Step to extend when door is opened and retract when closed. Steps shall be flush with outter edge of cab when stowed. Location: Each cab door	$1,410
1640-0029	Each cab step well's kick plates and steps shall be aluminum smooth plate IPO diamond plate and all surfaces painted black durabak up to and below cab floor level. All step surfaces provided with a multi-directional, aggressive gripping surface (Gator Grip) incorporated into the aluminum smooth plate.	$555
1640-0030	Each cab step well's kick plates and steps shall be aluminum smooth plate IPO diamond plate and all surfaces painted Gray Zolatone up to and below cab floor level. All step surfaces provided with a multi-directional, aggressive gripping surface (Gator Grip) incorporated into the aluminum smooth plate.	$555
1640-0031	Each cab step well's kick plates and steps shall be aluminum smooth plate IPO diamond plate and all surfaces painted Black Scorpion (rough finish) up to and below cab floor level. All step surfaces provided with a multi-directional, aggressive gripping surface (Gator Grip) incorporated into the aluminum smooth plate.	$555
1640-0032	Step below cab door Zico VS-20-5 elect swing out/down. Step to extend when door is opened and retract when closed. Steps shall be flush with outter edge of cab when stowed. Location: Front cab doors.	$1,410
1670-0001	Ramco 6001FFR mirrors. Remote controlled with top CAS750 convex. Location: [#LOC].	$1,410
1670-0002	Ramco 6001MCR mirrors. Remote controlled with bottom convex. Location: [#LOC].	$1,120
1670-0003	Velvac 2010 mirrors. Door mounted west coast style with remote control and heat.	$601
1670-0005	Mirror, 8" convex to be cab mounted [#LOC].	$81
1670-0006	1.5" Extension for Ramco Mirrors (OBSOLETE FROM MANUFACTURER)	$146
1670-0007	3" Extension for Ramco Mirrors	$146
1670-0008	4.5" Extension for Ramco Mirrors.	$146
1670-0010	Retrac West Coast mirrors mounted on cab doors.	$275
1670-0013	Both cab mirrors to be heated.	$274
1670-0014	Ramco 6001FFR mirrors. Remote controlled with top CAS750 convex.	$1,452
1670-0015	Velvac 2010 mirrors with marker lights. Door mounted west coast style with remote control and heat.	$633
1670-0017	Mirror Stainless Steel 8" Convex above officer side cab brow, Bell Type Mounting, 2 Piece Adjustable Telescoping Arm. Head #983, Arm #3983	$82
1670-0018	Velvac mirrors model 2025 with LED directional arrows. Door mounted (bottom mount) with remote control and heat.	$1,032
1670-0019	Ramco 6001CCR-750 mirrors. Remote controlled with bottom convex and top CAS750 convex. Location: [#LOC].	$1,501
1670-0020	Rosco mirrors w/marker lights and LED turn signals, remote, heated and convex. Located on front cab corners.	$1,038
1670-0021	Ramco 6001FFR mirrors. Remote controlled with CAS750R top remote convex. Location: [#LOC]	$1,629
1670-0023	Mirror Stainless Steel 8" Convex above driver side cab brow, Bell Type Mounting, 2 Piece Adjustable Telescoping Arm. Head #983, Arm #3983	$82
1670-0028	Rosco AccuStyle 818 door mounted mirrors (bottom mount). Chrome w/LED turn signals, remote, heated and convex.	$1,038
1670-0030	Kenworth model MX148S wide angle mirror. Location: [#LOC].	$165
1670-0031	2" Extension for Ramco Mirrors	$146
1670-0032	Ramco 6001FFR mirrors. Remote controlled with top CAS750 convex and LED turn signals. Location: [#LOC].	$1,883
1670-0035	Ramco 6001FFR mirrors with INVUE camera. Remote controlled with top CAS750 convex. Location: [#LOC].	$2,488
1670-0036	Ramco 6001MCR mirrors with INVUE camera. Remote controlled with bottom convex. Location: [#LOC]	$2,488
1670-0038	Lang Mekra mirrors w/LED marker lights and turn signals. Door mounted west coast style with convex, remote control and heat.	$1,217
1670-0044	Ramco 6001FFR mirrors with INVUE camera and LED turn signals. Heated/remote controlled flat glass with heated/remoted controlled top CAS750 convex. Location: [#LOC].	$2,420
1670-0046	Ramco 6001MCR mirrors. Remote controlled with bottom convex and LED turn signals. Location: [#LOC].	$1,390
1670-0052	Ramco 6000-PCHR mirrors. The mirrors shall incorporate heated and remote for both flat and convex using (2) Ramco model ELE-310 switches. Location: [#LOC].	$1,632
1675-0001	Stainless steel trim belt on front of cab. Location: [#LOC].	$434
1675-0005	Cab roof vent with-out fan (pair). Location: (1) each side centered above rear cab doors.	$338
1675-0006	Vent w/fan roof mounted, pair.	$760
1675-0013	Mud flaps (PR), front, black with logo.	$145
1675-0014	SCBA bottle storage, two driver side of cab behind rear door with cast doors.	$669
1675-0015	Cab roof mounted diamond plate 3 sided light tower shield with 45 degree front slope.	$861

1675-0016	Cab roof mounted painted job color 3 sided light tower shield with 45 degree front slope.	$1,073
1675-0020	Auto eject stainless steel scuff plate.	$85
1675-0022	Pair of 18" handrails located just behind driver and officer front door one each side.	$337
1675-0023	Pair of 18" handrails located just behind driver and officer rear door (ALS doors if equipped) one each side.	$337
1675-0024	Pair of 36" handrails located just behind driver and officer rear door (ALS doors if equipped) one each side.	$367
1675-0025	SCBA bottle storage, two officer side of cab behind rear door with cast doors.	$669
1675-0030	Mud flaps, front, black with E-ONE logo.	$141
1675-0033	Chrome fire bell with eagle. Location: Officer's side of front bumper extension.	$1,260
1675-0034	Cab driprail drain holes. The driprail just before the vista roof begins to have a drain hole provided (one each side of cab).	$78
1675-0035	Belt size tag. Install next to fluid capacity tag. Tag to provide belt sizes for all belts provided.	$94
1675-0036	Cab wheel well liners. The cab wheel well liners to be aluminum IPO ABS plastic. Paint job color.	$544
1675-0038	Sign plate smooth 30" x 30" mounted on cab roof (vista if equipped). Color: [#COL].	$216
1675-0039	Pair of 48" handrails located just behind driver and officer rear door (ALS doors if equipped) one each side.	$421
1675-0041	Stainless steel trim belt low on sides of cab.	$1,288
1675-0042	Rear cab wall to be smooth 3/16" aluminum plate. Cab wall to be finish painted to match the cab paint scheme.	$317
1675-0043	Sliding rear window mounted above pump panel. Top mount enclosed cab.	$1,014
1675-0045	Hansen white LED cab handrails upgrade (EA).	$177
1675-0048	Rear cab wall to be smooth 3/16" aluminum plate with a diamond plate overlay.	$396
1675-0053	Stainless steel scuff plates full height on rear cab corners (PR)	$218
1675-0054	Sign plate smooth 18"x28" mounted one each side cab roof (vista if equipped). Color: [#COL]	$430
1675-0055	Radio box 18W x 12H x 10D. Location: Centered up high of vista area recessed on the rear exterior cab wall with door hinged to the bottom.	$456
1675-0056	Stainless steel scuff plates on rear cab roof corners (PR)	$165
1675-0057	Mounting plate for battery charger receptacle and indicator - removable brushed stainless steel.	$258
1675-0058	Chrome fire bell with gold eagle. Location: Officer's side of front bumper extension.	$1,326
1675-0059	Rear cab wall to be smooth 3/16" aluminum plate with swirl plate overlay.	$651
1675-0060	Sign plate smooth 40" x 80" mounted on cab roof (vista if equipped). Color: [#COL]	$622
1675-0061	Cab roof mounted 4 sided light tower shield painted job color.	$1,395
1675-0062	Electric chrome fire bell with eagle. Location: Driver's side of front bumper extension. Includes switch on officer side overhead console.	$1,762
1675-0063	Mud flaps, front, black without logo.	$145
1675-0065	Stainless steel roller assemblies for back of cab. (1) each side rear cab corners.	$262
1675-0066	Skid plate under each lower step. Quest cab only.	$390
1675-0067	Cab roof mounted 3 sided light tower shield painted two-tone job color.	$1,073
1675-0071	Remove side grille from wheel well areas of the cab. TyphoonX cab only.	$213
1675-0072	(4) roof mounted (welded) sign plate mounting points. Mounts to space roof sign plate off cab roof and allow for easy removal.	$251
1675-0073	Hose deflector pin to protect Q2B on front bumper extension.	$187
1675-0074	Cab roof mounted 3 sided light tower shield with welded sides and painted job color with 45 degree front slope.	$1,268
1675-0075	Cab roof mounted painted job color 3 sided light tower shield with 90 degree front slope.	$1,073
1675-0076	Cab roof mounted diamond plate 3 sided light tower shield with 90 degree front slope.	$861
1675-0077	Storage box on rear cab roof 48W x 48L x 12H with 4-sided lid painted two-tone job color (if applicable)	$1,752
1675-0078	Hansen red LED cab handrails upgrade (EA).	$177
1675-0079	Diamond plate storage box for Little Giant model 17 on rear cab vista roof. Includes drop down door with push button latches and nylatron on floor.	$1,282
1675-0080	Fixed rear cab wall narrow windows (ea). Location: driver side rear wall.	$55
1675-0081	Smooth plate sides painted job color and diamond plate top/door storage box for Little Giant model 17 on rear cab vista roof. Includes 45 degree front angle, rear backstop, partition, drop down door with push button latches and nylatron on floor.	$2,942
1675-0082	Stainless steel scuff plates full height on Quest rear cab corners (PR).	$397
1675-0084	Side extensions at cab wheel wells for 4x4 application.	$760
1675-0085	Under riser half depth roll-out trays. Includes cab floor extensions. Requires riser height exterior compartments.	$1,138
1675-0086	Raised cab wheel wells for low OAH applications.	$394
1675-0087	Pair of handrails (8" driver and 18" officer) located just behind driver and officer front door.	$435
1675-0088	Fluid capacity tag to include filter model numbers for engine oil, transmission, fuel, air, hydraulic and coolant. Tire size front and rear to be included on tag.	$94
1675-0089	Radio box 18W x 12H x 10D. Location: Up high center rear wall panel offset to driver side of vista area recessed on the rear exterior cab wall with door hinged to the bottom. Includes rubber bumpers on upper corners of door.	$456

1675-0090	Light tower riser ahead of vista. For use with large towers. Installed tower to not exceed over all height of vista roof.	$1,563
1675-0091	Lightbar mounting angles (PR). Position on cab roof with each angle oriented front to rear with one leg welded to cab roof leaving top horizontal surface for lightbar mounting legs.	$254
1675-0092	Number plate mounting. "Z" type extrusions welded to cab roof (upper leg facing out) to support perimeter of sign plate. Allows sign to be attached without drilling through cab roof.	$351
1675-0093	Grille on side of cab over wheel (PR). Grilles are non-venting and for cosmetic purposes only. Includes black-out surface behind grilles.	$221
1675-0094	Microphone/Speaker box. 11"H x 9"W x 6.5"D Location: Centered up high recessed on the rear vista exterior cab wall with vertically hinged door.	$456
1675-0095	Diamond plate storage box on rear cab roof 80W x 36D x 14H with lid.	$1,550
1675-0096	Fixed rear cab wall narrow windows (ea). Location: officer side rear wall.	$55
1675-0109	Polished stainless steel scuff plates full height on Quest rear cab corners (PR).	$397
1675-0110	Cab exterior hand rails to use Austin Hardware model GR-002-AL-BRT-144 knurled bright anodized aluminum tubes IPOS.	$112
1675-0111	Pair of 24" handrails located just behind driver and officer front door one each side. Handrail to extend 6" lower than standard for 4x4 application.	$353
1675-0112	Pair of 24" handrails located just behind driver and officer rear door (ALS doors if equipped) one each side. Exterior handrail to extend 6" lower than standard for 4x4 application. Includes interior rubber grab handles on rear facing wall of driver and officer side wheel well risers.	$543
1675-0116	Brushed stainless steel scuff plates for cab handrails (PR).	$184
1675-0118	Fluid capacity tag to include lug nut torque specs for front and rear wheels in addition to required information.	$94
1675-0123	Chrome fire bell laser etching. Requires design provided in digital format. One side only.	$562
1675-0124	Additional fluid capacity tag in French.	$94
1675-0125	Mounting plate for battery charge receptacle, indicator and air auto eject receptacle - removable brushed stainless steel.	$258
1675-0126	Diamond plate storage box on rear cab roof 70W x 40D x 8.5H with lid.	$1,550
1675-0130	Mounting plate for battery charge receptacle, indicator, air auto eject receptacle and block heater receptacle - removable brushed stainless steel.	$258
1675-0131	Auto Kwikee step. Location: [#LOC].	$748
1675-0133	Rear cab and vista glass (if so equipped) to be dark tint (smoked glass) IPOS. Includes all glass rearward of front cab doors.	$511
1675-0134	Cab wheel well liners. The cab wheel well liners to be aluminum with sanded finish IPO ABS plastic.	$443
1675-0135	Sign plate smooth with sanded finish 20" x 20" mounted on cab roof forward of vista.	$216
1675-0136	Radio box 18W x 14H x 12D. Location: Up high center rear wall panel of vista area recessed on the rear exterior cab wall with door hinged to the bottom. Includes rubber bumpers on upper corners of door.	$456
1675-0138	Cab roof mounted 3 sided roof mounted AC shield with 45 degree front slope painted two-tone job color.	$880
1675-0140	Cab roof mounted diamond plate 3 sided AC shield with 45 degree front slope.	$668
1675-0141	Radio box 32W x 7H x 6D. Location: Centered up high of vista area recessed on the rear exterior cab wall with door hinged to the top. Includes plunger hold open.	$509
1675-0142	Radio box 12W x 8H x 6D. Location: Centered up high of vista area recessed on the rear exterior cab wall with door hinged to the top. Includes plunger hold open.	$456
1675-0143	A diamond plate storage box shall be mounted on top of the cab roof for storage of (1) stokes basket model 71. Stokes basket is 86Lx24Wx8H. Box is to be 26Wx87.5Lx9H in front, box will be sloped to match Vista rise. Box will be opened from the rear. Restraints will be included in the box to secure the basket in place. Box is to be centered side to side.	$1,344
1675-0144	Pair of 24" handrails located just behind driver and officer front door one each side.	$353
1675-0145	Diamond plate cover to protect the air conditioner lines on the cab roof.	$201
1675-0146	Polished stainless steel scuff plates full height on rear cab corners (PR).	$397
1675-0147	Electric chrome fire bell with eagle. Location: Driver's side of front bumper extension. Includes switch on officer side dash.	$1,762
1675-0149	The battery charger receptacle mounting plate shall be fabricated using 3/16" aluminum smooth plate. It shall be painted to match cab two tone job colors and align with the paint break as mounted.	$126
1675-0150	Storage box on back of cab above top mount walkway for backboard/stretcher. Backboard dim is 72Lx27Hx8D; stretcher dim is 65Lx17Hx4D. Box is to be diamond plate 76Lx27Wx8H with a vertically hinged door at each side with a thumb latch in each door. Box to be centered side to side approximately 4" above top mount walkway.	$1,282
1675-0151	Pair of 24" handrails located in the interior of driver and officer rear doors. The handrails shall be mounted on the rear wall. If equipped with an ALS cabinet the handrails shall be mounted on the ALS interior surface, outboard of the ALS access door within easy reach of rear door entry personnel.	$351
1675-0152	Sign plate smooth 40" x 40" mounted on cab roof (vista if equipped). Color: [#COL].	$288

1675-0153	SCBA bottle storage two driver and officer side of cab behind rear door with 3/16" plate doors painted job color.	$1,339
1675-0156	Polished stainless steel scuff plates full height on Quest rear cab corners (PR) to provide protection of painted surface(s) from quartz lighting as well as hose and or equipment as it is being removed from apparatus.	$397
1675-0158	Backboard storage compartment for (1) board. Includes retaining strap for board. Loc: [#LOC].	$628
1675-0159	Mounting plate for battery charge receptacle, indicator and block heater receptacle - removable brushed stainless steel.	$258
1675-0160	Backboard storage compartment for (1) board. Includes (2) hinged doors (1) each side with (2) push button latches for each door. Loc: [#LOC].	$766
1675-0161	Escape hatch located on rear cab roof.	$1,132
1675-0162	Cab roof vent with-out fan (pair). Location: (1) each side offset above driver and officer.	$338
1675-0163	Storage box (additional) to house light tower controls/tether, mounted on the rear of the cab roof offset to the driver side (exterior). The storage box shall be constructed of tread plate, include a drop down door tied into the door ajar circuit and thumb latch(s).	$327
1675-0164	Cab roof mounted painted job color 3 sided light tower shield with 45 degree front slope to match the height of the light tower in the bedded position (+1" -0").	$1,169
1675-0166	Cab roof mounted painted job color 3 sided light tower shield with 45 degree front slope. Located rearward on flat roof (non vista). Placement to allow 45 degree shield to be placed in normal vista rise location to allow cab to appear to have vista roof.	$1,167
1675-0167	Sign plate mounted to the full width front bumper center hose tray lid. Smooth plate painted FLNA4145 Black sized according to space available.	$160
1675-0168	Sign plate smooth 30" x 45" mounted on cab roof (vista if equipped). Color: [#COL].	$288
1675-0169	Door single vertically hinged painted with Tri-Mark latch. Location(s): driver side canopy area of cab.	$838
1675-0170	Embossed diamond plate in place of ALL standard and optioned diamond plate on cab.	$1,316
1680-0000	Air intake emergency shut-down. Dash mounted guarded switch.	$1,471
1680-0001	Block heater 1000 watt.	$463
1680-0002	Block heater 1500 watt. Available on ISM, ISX and S60 only.	$474
1680-0005	Thermatic fan clutch.	$1,287
1680-0006	Drivelines 1710.	$958
1680-0007	Drivelines 1810. Required on 1550 lb/ft torque engines.	$1,501
1680-0008	Tow eyes front painted below bumper/cab (PR).	$241
1680-0009	Tow eyes front stainless steel below bumper / cab (PR).	$606
1680-0010	Tow eyes front stainless steel mounted in up position. Requires 16" minimum bumper extension on custom chassis and 18" minimum bumper extension on commercial chassis.	$606
1680-0011	Tow eyes rear below body, painted.	$556
1680-0012	Tow eyes rear frame painted.	$494
1680-0013	Tow hooks front stainless steel in down position. Requires extended bumper on commercial chassis. If Non-Extended bumper on Comm. Chassis, tow hooks are to be ordered with chassis.	$726
1680-0014	Tow hooks front stainless steel mounted up. Requires 12" minimum bumper extension on custom and commercial chassis.	$726
1680-0015	Trailer hitch Class III mounted rear.	$885
1680-0016	Exhaust end chrome plated. Due to high heat from current emission exhaust systems, dis-coloring of exhaust end may occur after prolonged use.	$236
1680-0017	Hotshift PTO.	$1,787
1680-0021	Exhaust end for Plymovent. For exhaust extraction system.	$245
1680-0022	Auto lube system Vogel. Chassis points only.	$3,817
1680-0033	Rear Tow Shackles (Pair)	$243
1680-0042	Tow hooks front painted in the down position.	$250
1680-0053	Storage below rear bench seat. (1) hinged door on each side of the bench seat.	$553
1680-0056	Cold weather pkg for cab. Includes (2) 8" fans, fan clutch, additional insulation on the front wall and insulation on rear cab heater hose lines (if equipped).	$3,056
1680-0075	(3) way rear underbody receiver assembly. Includes rearward 9000 lb. winch receiver or Class III trailer receiver and (2) side facing 9000 lb. winch receivers- (1) each below rearward body compartments. Includes rearward tow eyes and electrical winch connections for each receiver.	$2,130
1680-0076	Under front bumper 9K winch receiver. Includes electrical connection for portable winch application. Custom chassis only.	$1,680
1680-0079	Pressure Sensing Governor DDEC Engine - Required with Fire Commander	$1,226
1680-0080	Tow eyes front painted in up and down position. Tow eyes to use same holes for both sets.	$480
1680-0081	Special cover kit for Memphis to include auto lube Vogel driver's side front frame and cannon plug cover	$384
1680-0082	The air intake emergency cable reset. Officer side of cab below the front bumper. Locate so cable is not visible or can be pulled without reaching under the bumper.	$194
1680-0083	Cooler for steering system.	$807
1680-0086	3" tubular protective bar under rear tailboard (width of tailboard) connected to frame to provide protection. Ends of tube to be sealed.	$2,009
1680-0087	Radiator brush guard below cab.	$541

1680-0089	Chassis exhaust to exit to driver side of chassis below the forward body compartment corner.	$1,178
1680-0090	Block heater to have thermostatic controller.	$168
1680-0091	Tow eyes front stainless in up position and painted in down position. Tow eyes to use same holes for both sets.	$844
1680-0092	Tow blocks under front bumper extension.	$291
1680-0093	Tow eyes front stainless steel with 3" holes mounted in up position. Requires 16 inminimum bumper extension on custom chassis and 18 in minimum bumper extension on commercial chassis.	$818
1680-0094	Trailer hitch Class IV mounted rear.	$1,616
1680-0095	Side underbody 9K winch receivers. Includes (2) side facing- (1) each below rearward body compartments for portable winch with electrical connection for winch.	$1,420
1680-0096	Side underbody 9K winch receivers. Includes (2) side facing- (1) each below body compartment ahead of the rear wheels for portable winch with electrical connection for winch. With this assembly the compartments will need to be notched.	$1,420
1680-0099	Block heater 1500 watt wired through inlet receptacle. Available on ISM, ISX and S60 only	$474
1680-0116	Oil pan heater. Fleetguard 22MM 150W/120V wired to shoreline.	$440
1680-0117	Special cab tilt reservoir location. Reservoir to be located in the [#LOC].	$556
1680-0118	Cold Weather Pkg for Cab. Includes fan clutch and additional insulation on the front wall and insulation on rear cab heater hose lines (if equipped).	$2,722
1680-0120	Under the body there shall be equipped with a pair of receiver assemblies, each with a removable swivel hoist ring. One each side of apparatus. The receivers shall be square steel tubing, same size as a receiver for a Class III trailer hitch. Located behind the rear axle.	$3,110
1680-0121	Under the body there shall be equipped with a pair of 12,000 lb receiver assemblies, each with a removable swivel hoist ring, or can be used with a Class III trailer hitch. One each side of apparatus. The receivers shall be locate in front of rear axle. Final location will depend on Engineering and driveline. 12v not included.	$3,110
1680-0122	Tow eyes rear below body painted. Eyes to be on edge pointing to rear.	$556
1680-0126	Block heater 1000 watt wired through inlet receptacle (or block heater auto eject inlet receptacle if so equipped).	$463
1680-0127	Block heater thermostat.	$240
1680-0130	High flow power steering pump. Includes additional cooler. Requires engineering evaluation. Not available in hot climates.	$466
1680-0131	Tow eyes rear frame stainless steel.	$1,167
1680-0136	Relocate the air governor to the steering reservoir bracket above the driver side frame rail.	$171
1680-0137	Diesel Exhaust Fluid (DEF) 10 gallon tank. Location: [#LOC].	$1,420
1680-0144	Trailer hitch class V mounted rear. This hitch has under body support as needed.	$2,285
1680-0145	Diesel Exhaust Fluid (DEF) 5 gallon tank. Location: [#LOC].	$1,348
1680-0154	Oil pan heater - Fleetguard 150W/120V wired to block heater receptacle. ISC/ISL only.	$384
1680-0179	Sealant the area between the frame, frame liner, crossmembers and rear axle suspension brackets to prevent buildup of road salt and dirt and corrosion at all bracket to frame rail and frame to frame rail attachment points.	$470
1680-0181	Oil pan heater - Fleetguard 300W/120V wired to block heater receptacle. ISM only.	$486
1680-0187	On-Spot tire chain installation. Requires pre-wire option located in Cab Electrical.	$2,544
1680-0189	Tow eyes front painted mounted in up position. Requires 16" minimum bumper extension on custom chassis and 18" minimum bumper extension on commercial chassis.	$241
1680-0193	Tow eyes rear below body stainless steel.	$1,840
1680-0194	Tow eyes front stainless steel through bumper / cab (PR).	$840
1680-0196	Tow eyes front painted through bumper / cab (PR).	$471
1680-0217	Driveline guard (EA).	$275
1680-0227	Tow eyes front painted with 3" holes below bumper/cab (PR).	$606
1680-0228	Under front bumper Class III hitch receiver. Custom chassis only.	$1,359
1680-0231	Insta-chain tire chain installation. Requires pre-wire option located in Cab Electrical.	$2,544
1680-0239	Tow eyes rear frame painted mounted low just above tailboard.	$494
1680-0242	Cold weather pkg for cab. Includes additional insulation on the front wall and insulation on rear cab heater hose lines (if equipped).	$3,028
1680-0244	(2) way rear underbody Class III hitch receiver. Includes Class III trailer receivers, (2) side facing- (1) each below rearward body compartments for portable winch receivers with electrical connection for winch.	$1,424
1680-0245	Upgrade receiver and tow eye extension. The front bumper 9K winch receiver shall be extended forward, approximately 1" beyond front bumper IPOS (rather than at the under bumper location). Custom chassis only.	$673
1680-0247	Trailer hitch Class III mounted rear, optmized mounting to be in a raised mounting position.	$885
1680-0249	Driveline guards (as applicable).	$824
1680-0250	Diesel Exhaust Fluid (DEF) 5 gallon tank for 2013 EPA engines. Location: [#LOC].	$1,568
1680-0251	Diesel Exhaust Fluid (DEF) 10 gallon tank for 2013 EPA engines. Location: [#LOC].	$1,639
1680-0253	Fuel tank brush guard.	$631
1680-0254	Officer side rear underbody Class III hitch receiver. Includes Class III trailer receiver, (1) officer side facing side for portable winch receiver with an electrical connection for winch.	$854

1685-0001	Cab interior black. Does not include seat color.	$2,640
1685-0002	Cab interior burgundy. Does not include engine cover or seat color.	$2,640
1685-0003	Fold down computer tray bolted to engine cover on officer's side.	$682
1685-0004	Storage below rear bench seat for four SCBA bottles.	$620
1685-0008	Control lanyard Y type for air horns.	$158
1685-0011	Stainless steel pair of window bars for rear cab doors.	$347
1685-0026	Door Seat Riser Ovrlap drv/off for the Typhoon only.	$180
1685-0027	Heater rear w/o cover (PR).	$1,386
1685-0028	Heaters rear w/covers (PR).	$1,480
1685-0038	ALS Prov w/Ext Access Drs	$3,137
1685-0039	Window bars stainless steel pair for canopy windows.	$347
1685-0056	Heater rear w/o cover (PR) and front heater with heat to the feet for the driver and officer.	$1,386
1685-0057	Heaters rear with covers (PR), and front heater with heat to the feet for the driver and officer.	$1,480
1685-0058	Interior cab access panel. Driver side of cab for access to rear of shore line receptacle. Panel to be 8" x 8".	$280
1685-0059	Locking seat riser door. Driver and officer seat riser doors are to include a locking push-button latch. Key type to be 1250.	$138
1685-0060	Louvers in rear bench seat riser. For ventilation.	$143
1685-0061	Interior cab access panel. Officer side of cab for access to rear of shore line receptacle. Panel to be 8" x 8".	$280
1685-0063	Medical glove box. Mount to rear area of engine cover. Includes slotted top for dispensing gloves without opening hinged lid. Box to be same color as interior of cab. Secure lid in closed position with small butterfly latch.	$232
1685-0064	Embossed diamond plate foot plates located at driver, officer and rear facing seat positions where feet would rest while seated.	$259
1685-0066	Officer seat riser storage compartment door to be on front of riser hinged towards engine cover.	$163
1685-0068	Rear engine cover diamond plate trim.	$200
1685-0069	Hinged interior cab gauge panel in front of driver. Includes (9) gauges- English dominant. Panel to be hinged for access to driver gauge cluster.	$1,965
1685-0071	Notch cab wheel well and engine cover to provide 40 inches from rear wall to engine cover	$436
1685-0072	There shall be no E-One logos on cab seats.	$1,898
1685-0074	Communications cabinets (1/8"). 20.5"W x 16"H x 20"D INT (PR). Includes (2) roll out trays and vertically hinged door (1/8") with thumb latch. Location: One each side over cab wheel wells. Includes a smooth plate cover with matching cab finish for customer installed wiring between towers.	$2,405
1685-0075	Removable ABS panel 35"H x 4.5"W for officer side cab wall to route communication wires from officer side communication cabinet to officer side dash area. Panel to be attached with screws.	$102
1685-0078	Kick Plate in front of the officer to be diamond plate.	$133
1685-0079	Tag to indicate Combination Vehicle Weight, Gross Axle Weight, and Gross Vehicle Weight shall be located in the cab.	$41
1685-0080	Embossed diamond plate foot plates located at driver, officer and forward facing rear seat positions where feet would rest while seated.	$324
1685-0084	3/16" Aluminum plate on top engine access door. To have swirl finish and be spaced up approx 1/2".	$232
1685-0085	Center cab dash electrical panel to be held in place with coin slot style fasteners.	$85
1685-0086	Stainless steel scuff plate under interior canopy window.	$308
1685-0087	Rear engine cover radio cabinet. Cabinet to have access from the top and from rear with swirl and clear coat finish.	$1,142
1685-0088	Removable ABS panel 35"H x 4.5"W for driver side cab wall to route communication wires from driver side communication cabinet to driver side dash area. Panel to be attached with screws.	$102
1685-0089	Louvers for officers seat riser. Locate louvers in the front, side and door of riser.	$315
1685-0090	Rear cab headliner to be six pieces IPOS.	$239
1685-0091	Mount customer supplied computer tray on engine cover. Includes support plates on the top and bottom.	$208
1685-0092	Mount (2) intermediate steps to be bolted-on (one each side) inside the front driver and officer cab step well drawing # 672433 and 672434.	$173
1685-0093	Black rubber handrail mounted parallel to seats on rear of engine cover for driver and officer rear facing seats.	$166
1685-0094	Storage below rear bench seat. (1) horizontally hinged door on the front of the rear bench seat.	$400
1685-0095	Locking rear seat riser door (PR). Seat riser doors are to include a locking push-button latch. Key type to be 1250.	$138
1685-0101	Rear engine cover radio cabinet. Cabinet to have access from the top and from rear with OTO finish.	$620
1685-0105	Sun visor strap (PR) with snap fasteners.	$129
1685-0106	Rear engine cover radio cabinet. Cabinet to have access from the top and from rear.	$620
1685-0107	Interior grab handle rubber covered (2). Locate one each side at interior of rear cab door opening (at rear of opening).	$192
1685-0108	Locking seat riser door. Driver and officer seat riser doors are to include a locking push-button latch. Key type to be CH-751.	$72

1685-0109	Locking rear seat riser door (PR). Seat riser doors are to include a locking push-button latch. Key type to be CH-751.	$72
1685-0110	Storage below rear bench seat for two SCBA bottles (one each side).	$620
1685-0111	Rear cab interior wall overlay with swirl and clear coat finish.	$626
1685-0112	Integrated Roll Sensor (IRS) for RollTek air bag system.	$2,014
1685-0113	Integrated roll sensor slave module for RollTek air bag system.	$937
1685-0114	Integrated Head Curtain (IHC) for RollTek air bag system.	$566
1685-0115	Integrated Belt Pretensioner (IBP) for RollTek air bag system.	$328
1685-0116	Interior grab handle rubber covered (2). Locate one each side at interior of front cab door opening (at rear of opening).	$192
1685-0117	Rear cab interior wall overlay with Zolatone finish.	$408
1685-0119	3/16" Aluminum plate on top engine cover forward of access door. To have swirl finish and be spaced up approx 1/2".	$232
1685-0120	Rear cab interior wall overlay with diamond plate finish.	$513
1685-0121	Flat bar (.5" x 2") installed on rear cab wall up high with full length shelf track.	$288
1685-0126	SCBA Storage tubes (4) horizontally mtd (2) each side in lower rear cab compartments above floor level.	$725
1685-0127	Locate rear cab heaters below front of rear wall seat riser(s). Includes louvers on each side facing riser panel.	$338
1685-0131	Reinforcement plate(s) behind lower rear cab wall padding. TME only.	$534
1685-0134	Embossed diamond plate foot plates located at each seating position where feet would rest while seated.	$259
1685-0135	Hot climate insulation package. Includes insulation for ceiling, front wall, rear wall, side walls, below seat risers, and in doors.	$2,127
1685-0136	Storage in rear wall free standing seat riser. (1) horizontally hinged door on the front of the free standing seat riser.	$309
1685-0137	Console Remote Control Panel between Driver and Officer for remote control Bumper Turret, Pump Control, and switchs.	$779
1685-0138	3/16" Aluminum plate on top engine cover forward of access door. Finish to match cab interior and be spaced up approx 1/2".	$232
1685-0139	3/16" Aluminum plate on top engine access door. Finish to match cab interior and be spaced up approx 1/2".	$232
1685-0140	Storage at rear engine cover w/ cargo net top. (3) sided storage approx. 44.5"W x flush with upper engine cover high x sloped area of engine cover deep. Storage area to match cab interior.	$680
1685-0146	Extended electrical access panel in cab. Panel to extend up to allow for radio/equipment installation.	$535
1685-0147	Narrow rear cab wall support channel. Not available with rear wall seating.	$197
1685-0153	Storage below rear bench seat. (2) horizontally hinged doors on the front of the rear bench seat.	$798
1685-0154	Communications cabinets (1/8"). 20.5"W x 16"H x 20"D INT (PR). Includes (2) roll out trays and cargo netting over openings. Location: One each side over cab wheel wells. Includes a smooth plate cover with matching cab finish for customer installed wiring between towers.	$2,405
1685-0155	Cold climate insulation package. Includes insulation for ceiling, front wall, rear wall, side walls, below seat risers, and in doors.	$2,127
1685-0156	Command desk, rear engine cover 5"H x 17"D x full width between medical cabinets. Desk to include hinged aluminum lid with lexan overlay and gas shock, trigger latches, 1" return lip on lid and 1" back splash. Desk to be mounted 26" off of floor with finish to match cab interior.	$2,016
1685-0157	Dash label "Switch Compression Brake Off for Wet or Slippery Road Conditions".	$43
1685-0161	Severe duty dash package. Includes smooth plate alum center and officer side dash painted to match cab interior and lower dia plt kick panels.	$856
1685-0162	Severe duty engine cover. Includes floor type matting on sides, top forward and top rearward engine covers with sanded finish smooth aluminum trim.	$928
1685-0164	Severe duty engine cover. Includes floor type matting on sides, top forward and top rearward engine covers with smooth aluminum trim painted to match cab interior.	$1,090
1685-0165	Storage below rear bench seat. (1) horizontally hinged door on the front of the rear bench seat. Hinge hardware mounted with acorn nuts outside.	$400
1685-0172	Storage below rear bench seat. (1) hinged door on each front corner of the bench seat base.	$762
1685-0174	Louvers for rear bench seat riser. Locate louvers on each side of riser.	$315
1685-0179	Locate rear cab heaters below top mount pump panel on rear cab wall. Includes louvers as applicable.	$338
1685-0180	On Scene Solutions Talon helmet holder (EA). Location: [#LOC].	$364
1685-0181	Pump operator panel on rear wall of cab. For use with TME pump panel. Final design to be determined by E-ONE Applications and Chassis Engineering	$1,905
1685-0182	Severe duty dash package. Includes smooth plate alum center, officer side dash and lower kick panels; all painted to match cab interior.	$856
1685-0183	Front heater with heat to the feet for the driver and officer	$723
1685-0184	Heater rear w/o cover. Includes 110V blower.	$1,150
1685-0185	Locking rear seat riser door. Seat riser door to include a locking push-button latch. Key type to be 1250.	$138

1685-0188	Stainless steel trim low on officer side of engine cover (to match driver side). CII / Typhoon only.	$118
1685-0189	Identification plate GSA units. Located on inside of driver's door. Exact information and wording to be determined at time of final inspection. See specification.	$253
1685-0191	Diamond plate cover for battery charger/air compressor. Includes louvers for ventilation.	$203
1685-0192	PAC TRAC panels vertically stacked on back wall of cab each side outboard of bench seat.	$1,326
1685-0193	Slideout MDT mount officer cab dash. Requires severe duty dash w/ MDT notch. Not available with heat to the feet.	$971
1685-0194	Officer cab dash modification for Havis slideout MDT bracket. Not available with heat to feet or side roll protection.	$419
1685-0196	Severe duty Quest officer dash package. Includes smooth plate alum officer side dash with trim panel painted to match cab interior and lower dia plt kick panel.	$357
1685-0197	Rear upper cab interior wall 3/16" overlay with Zolatone finish. Approximately 20" high.	$326
1685-0199	Rear engine cover brushed stainless steel trim.	$422
1685-0201	Severe duty dash package. Includes smooth plate alum center and officer side dash painted to match cab interior and lower dia. plt. kick panels. Officer cab dash notched for MDT slide-out bracket(s). Not available with heat to the feet.	$1,044
1685-0204	Side mount telescopic computer tray bolted to engine cover on officer's side.	$845
1685-0205	Storage at rear engine cover w/ drop down rear door. (3) sided storage approx. 44.5"W x flush with upper engine cover high x sloped area of engine cover deep with (2) equally spaced vertical dividers. Storage area to match cab interior.	$680
1685-0207	Cup holders; severe duty dash. (1) each side facing of center electrical cover; driver offset rearward, officer offset forward. Holders to match cab interior.	$209
1685-0219	Interior grab handle rubber covered (2). Locate one each side at interior of rear cab door opening (at front of opening).	$192
1685-0221	Severe duty dash package. Includes smooth plate alum center and officer side dash painted to match cab interior and lower dia plt kick panels. Officer cab dash notched with recessed glove box. Includes angled notepad holder on top. Not available with heat to the feet or Rolltek.	$1,261
1685-0222	Storage at lower rear engine cover w/ cargo net top. Approx. 30"W x 12"H x sloped area of engine cover deep. Storage area to match cab interior.	$680
1685-0223	Storage at rear engine cover w/ lift-up door. Storage approx. 44.5"W x flush with upper engine cover high x sloped area of engine cover deep. Storage area to match cab interior.	$680
1685-0224	[#COL] vinyl cover for steering wheel shaft at driver's position.	$45
1685-0225	Storage at rear engine cover w/ lift-up door. Storage approx. 37.5"W x flush with upper engine access cover high x 34" deep (front to rear). Includes forward 12" stationary cover. Storage area to match cab interior.	$942
1685-0234	Cup holders; severe duty dash. (1) each side of forward engine cover. Holders to match cab interior.	$209
1685-0235	Foot switch Linemaster model 632S to control air horns located [#LOC]. Includes 25 degree diamond plate bracket.	$106
1685-0238	Insulation - front cab wall. Includes insulation on rear cab heater hose lines (if equipped).	$95
1685-0239	Cab floor to be overlayed with 1/8" embossed diamond plate; front and rear.	$849
1685-0240	Slide-out MDT mount officer cab dash with dock. Requires severe duty dash w/MDT notch. Not available with heat to the feet.	$1,332
1685-0242	Officer seat riser storage compartment door to be hinged to the rear.	$99
1685-0243	Pac Trac panels vertically stacked on back wall of cab each side outboard of medical cabinet.	$1,326
1685-0244	Mechanical fastners ipos for headliners.	$167
1685-0247	Cab floor to be overlayed with 1/8" embossed diamond plate; front and rear. Single piece with no gaps around perimeter. Front plates to be sand blasted to remove shine.	$1,014
1685-0248	Storage box with diamond plate hinged top with push-button latch. Box to be mounted on floor centered of rear wall. Size: 36H x 40W x 20D. Finish to match can interior (excluding lid). Includes compt light to match body package.	$1,292
1685-0251	Diamond plate cover to protect the steering wheel shaft/knuckle.	$196
1685-0254	Storage box locking, mounted on the rear lower engine cover. Engine cover lock box measures 18x24x9 with a lift top lid and a locking latch. Finish will match cab interior.	$775
1685-0258	SCBA rear wall peg tool board mount for three (3) Lifeguard Smart Dock 2 SCBA brackets. The "peg board" SCBA tool board shall be mounted between the two (2) rear outboard seats with adequate room between each pack to mount complete SCBA packs. Peg board sizing shall be approximately 40" wide X 35" high and shall be spaced off the rear wall approximately 1". The peg board shall be finished with Zolotone.	$2,301
1685-0261	Storage below rear bench seat. (1) cargo net (black) on each side of the bench seat to gain access to storage area.	$553
1685-0262	Storage below rear bench seat for two SCBA bottles (driver side). Officer side to be open storage w/ door.	$620
1685-0263	Severe duty dash package. Includes smooth plate alum center and officer side dash and lower kick panels; all painted to match cab interior. Officer cab dash notched for MDT slideout bracket(s). Not available with heat to the feet.	$1,044
1685-0265	Smooth plate cover(s) for battery charger and air compressor. These cover's shall be painted to match cab interior and shall include louvers as required for ventilation.	$203

1685-0266	Bolt-in partition wall. Locate under bench seat centered between driver and officer side.	$201
1685-0267	Modify rear bench seat riser to have storage access from each side for up to (2) 20lb ABC extinguishers, (1) ea side.	$1,256
1685-0269	Storage box approximately 11" wide x 10" high x 26" deep made from 1/8" diamond plate aluminum, centered on to rear cab floor. The box shall cradle (1) 2.5 gallon water fire extinguisher. The door shall be hinged with push button latches to provide easy access to the extinguisher in its stowed position stored at a slight incline within the box.	$596
1685-0271	Embossed diamond plate foot plates painted with black Durabak located at each seating position where feet would rest while seated.	$367
1685-0272	Cup holder (PR) with shallow tray located at front center of engine cover. Polyurethane construction for use with severe duty engine cover only.	$108
1685-0273	KNOX-BOX MedVault 2 model 5520H3S2-4. Includes E-ONE installed wiring to switched 12v power supply. Location: TBD per customer provided sketch. Requires dept to purchase software package from KNOX-BOX (if they do not already have it).	$2,411
1685-0274	Plate aluminum 1/8" outboard of medical cabinet rear wall between extrusions behind padding. Plate to run from ceiling down to rear cab support bracket.	$196
1685-0275	Cup holder (PR). Polyurethane construction for use in Typhoon and CII with severe duty engine cover only. Location: [#LOC].	$132
1685-0279	Chrome grab handle. Locate (1) on the engine cover centered between latches.	$102
1685-0281	Control lanyard type officer side only for air horns.	$158
1685-0282	Slideout MDT mount officer cab dash with dock (Havis DS-PAN-111, C-MD-105-Z, C-HDM-135). Requires severe duty dash w/ MDT notch. Not available with heat to the feet. To include 12 VDC electrical outlet wired to battery hot.	$1,689
1685-0283	Pac Trac panels vertically stacked on back wall of cab.	$1,326
1685-0284	Raceway across lower engine cover; full width of cover. Painted to match cab interior.	$195
1685-0285	Cup holder / tray for engine cover painted to match cab interior. Approx 14" wide x 10" long with tapered front corners and cup holders at each rear corner. For use in Typhoon and CII with severe duty engine cover.	$369
1700-0001	Alternators Leece Neville dual 270 amp. 480 amp NFPA/540 amp SAE rating. Available only on ISX12 and Detroit EGR Series 60 engines.	$3,468
1700-0002	Alternator Niehoff 250amp. (250 amp SAE/240 NFPA rating). Not available on Cummins ISC or Detroit Diesel engines.	$2,233
1700-0003	Alternator Leece Neville 270 amp SAE, 240 amp NFPA rating.	$1,895
1700-0004	Alternator Niehoff 290 amp (290 amp SAE/265 NFPA rating). Not available on Cummins ISC, ISL or Detroit Diesel engines.	$3,402
1700-0005	Alternator Leece Neville 320 amp. 320 amp SAE/275 amp NFPA.	$2,947
1700-0006	Alternator Niehoff 400amp (400 Amp SAE/385 NFPA rating). Cyclone II w/Cummins ISM. Not available on Detroit Diesel Engines Recycle requires Eng. Review.	$5,159
1700-0008	Alternator Leece Neville dual 320 amp. 560 amp NFPA/540 amp SAE rating. Available only on ISX12 and Detroit EGR Series 60 engines.	$4,768
1700-0009	Alternator Niehoff 300 amp (300 amp SAE/270 NFPA rating). Available only on ISX12 and Detroit EGR Series 60 engines.	$2,950
1700-0010	Noise filter for Leece Neville alternator.	$192
1700-0011	Alternator Niehoff 340 amp. Not available on Cummins ISC, ISL or Detroit Diesel engines.	$4,003
1700-0012	Alternator Niehoff 430amp (430 Amp SAE/380 NFPA rating). Available on Cummins ISX12 only.	$4,069
1700-0017	Noise filter for Neihoff alternator.	$195
1700-0018	Alternator Delco Remy 300 amp. 300 amp SAE/264 amp NFPA.	$2,889
1700-0019	Alternator Niehoff 360 amp (360 amp SAE/320 NFPA rating). Available only on ISX12.	$2,950
1750-0000	Ammeter gauge in cab 0-300 amps.	$289
1750-0001	Dome lights clear large one for each cab door.	$128
1750-0002	Dome lights red large one driver side one officer side	$128
1750-0004	Dome lights red large one driver side one officer side rear of cab	$128
1750-0006	Map light flexible arm. Located [#LOC].	$180
1750-0009	Radio AM/FM CD with weather band located [#LOC].	$726
1750-0010	Radio speakers additional pair. Locate each side rear cab ceiling.	$244
1750-0011	Speedometer officer's side overhead.	$278
1750-0012	Swivel reading lamps (PR) overhead between driver and officer. Lights to be individually switched.	$97
1750-0013	Turn signal Whelen 600 LED amber arrow pair located [#LOC].	$576
1750-0015	Windshield fans 8" pair. Location: [#LOC].	$336
1750-0016	Pump hourmeter in cab.	$120
1750-0018	Battery charger, Super Smart, 20 amp with 120V Kussmaul air compressor.	$1,449
1750-0019	Battery charger Super Smart 110 volt, 20 amp.	$375
1750-0021	Battery charger Kussmaul model 1200, 40 amp.	$631
1750-0022	Battery charger Kussmaul 40 amp model 1200 with air compressor.	$2,130
1750-0024	Auto-Eject receptacle inlet 20 amp located [#LOC] with a [#COL] cover.	$513
1750-0025	Auto-Eject receptacle inlet 30 amp 120 volt located [#LOC] and with a [#COL] cover.	$750
1750-0026	Clamshell controller mounted on officer's side of engine cover for the air horns.	$111
1750-0027	Control push-button switch officer dash for Q2B siren.	$85

1750-0029	Switch horn button two position DOT/air horn.	$88
1750-0030	Switch horn button two position DOT/electronic siren.	$88
1750-0031	Switch horn button two position DOT/Q2B.	$88
1750-0032	Switch horn button three position DOT/air horn/electronic siren.	$180
1750-0033	Switch horn button three position DOT/air horn/Q2B.	$180
1750-0034	Switch, additional 12 volt/15 amp. Location and function: [#LOC].	$180
1750-0035	Cornering light relay circuits for lights on sides of cab and / or bumper. Includes (2) relays. Requires scene light option. Interlocked with park brake.	$368
1750-0039	Mrkr Pkg Chas LEDTrklt-Pmp/Res	$494
1750-0040	Battery charger Super Smart 220 volt 50 Hz, 20 amp.	$375
1750-0042	Horn button selector switch, 3-position DOT/ES/Q2B.	$180
1750-0047	The chassis shall be pre-wired for installation of tire chains.	$381
1750-0048	Round clear incandescent light mounted in the [#LOC] door.	$31
1750-0049	Round red incandescent light mounted in the [#LOC] door.	$31
1750-0050	Round amber incandescent light mounted in the [#LOC] door.	$31
1750-0052	Round clear LED light mounted in the [#LOC] door.	$146
1750-0053	Round red LED light mounted in the [#LOC] door.	$55
1750-0054	Round amber LED light mounted in the [#LOC] door.	$55
1750-0059	Receptacle inlet 20 amp with a [#COL] cover. Location: [#LOC].	$259
1750-0060	Auto transfer switch 120 volt. Includes 8 place breaker box. Allows interior receptacles to be powered by either shore power or generator.	$682
1750-0061	Control push-button switch officer dash for air horns.	$85
1750-0062	Control push-button switch officer dash for siren.	$85
1750-0063	Clamshell controller mounted on officer's side of engine cover for Q2B.	$111
1750-0064	Clamshell controller mounted on on officer's side of engine cover for electronic siren.	$111
1750-0065	Turn signal Whelen 600 halogen amber pair located [#LOC].	$254
1750-0066	Halogen front turn signal amber (PR). Locate: [#LOC].	$245
1750-0067	Additional 4" red LED dome lights (PR) for driver and officer.	$254
1750-0068	Additional 4" red incandescent dome lights (PR) for rear of cab.	$237
1750-0069	Additional 4" red incandescent dome lights (PR) for driver and officer.	$193
1750-0070	Additional 4" red LED dome lights (PR) for rear of cab.	$254
1750-0071	Mount customer supplied antenna on cab roof. Location: [#LOC].	$156
1750-0072	12 VDC (or 24VDC) electrical outlet in the cab wired battery hot. Location: [#LOC].	$54
1750-0073	Antenna base Tessco P/N 90942 (NMO Motorola Style - also called MATM style) on cab roof. Location: [#LOC].	$84
1750-0074	Interlock to position front intake for cab tilting.	$248
1750-0075	English dominant main cab gauge cluster.	$1,824
1750-0076	Metric dominant main cab gauge cluster.	$1,931
1750-0077	Turn signal Code 3 model 65 LED amber with arrow insert (PR). Location: [#LOC].	$645
1750-0078	Light Whelen model PSR00FRR LED (4) red. Horizontally mounted flashing strip light on each of the inside lower cab door panels. Wire through door switch.	$708
1750-0079	Fuel gauge for officer.	$224
1750-0080	Conduit flexible 1.5" for radio installation center of dash to compartment under officer's seat.	$270
1750-0081	Conduit flexible 1.5" for radio installation compartment under officer's seat to pump panel.	$237
1750-0082	12V power distribution module. Includes (6) battery hot and (6) switched hot circuits. 100 amps max (IATS). Location: [#LOC].	$278
1750-0083	Turn signal Federal Signal QuadraFlare QL64Z-ARROW LED amber pair located [#LOC].	$245
1750-0084	Receptacle inlet 220 volt European "Schuko" style. Includes matching cord connector. Location: [#LOC]	$368
1750-0088	Whelen 500 LED red door ajar light. Model 50R00FRR light with 5FLANGEC flange.	$167
1750-0091	Battery Saver Kussmaul model 091-195-12 wired to battery charger receptacle.	$623
1750-0095	Second DOT traffic horn	$118
1750-0097	LED Light in cab to Illuminate Pump Shifter and shall activate with the headlights.	$44
1750-0110	Battery Charger Professional Mariner. Located outside driver side door area. The charger to be mounted behind driver's seat on front face of communication box, next to EQ2B amplifier.	$1,000
1750-0111	Digital voltmeter in cab. Location: Driver side overhead console.	$305
1750-0113	Dome Lts Red/White Incandescent. Package includes two lights mounted in the front of the cab. White light wire through door and light assembly mounted switch. Red light through light assembly mounted switch.	$252
1750-0114	Cab Headlights in addition to front quad headlights	$384
1750-0115	Master warning light switch to have a red cover (or bezel).	$34
1750-0117	Auto eject receptacle inlet 15 amp 250 volt with a [#COL] cover. Location: [#LOC].	$469
1750-0118	Flexible 2" conduit with connectors. Location: Officer cab dash to bottom of medical cabinet.	$329
1750-0119	Flexible 2" conduit with connectors. Location: Center cab dash to rear bench seat riser.	$286
1750-0122	Additional dome lts red/white 4" LED (PR) located one each side over enclosed TM pump panel. White light wired through door and light assembly mounted rocker switch. Red light through light assembly mounted rocker switch.	$679
1750-0123	Auto eject receptacle inlet 15amp location or function [#LOC] and the color shall be [#COL].	$466

1750-0124	Whelen 4'' round LED red door ajar light. Model 20R00FCR light with 2FLANGEC bezel.	$167
1750-0125	Block heater receptacle 15 amp with a [#COL] cover. Location [#LOC].	$259
1750-0126	Conduit flexible 1.5" for radio installation center of dash to area behind officer's seat.	$270
1750-0129	Door ajar alarm to be a chime versus an alarm.	$194
1750-0130	Xantrex Truecharge 40+. Wire to autoeject receptacles.	$1,528
1750-0132	Auto transfer switch for additional battery charge receptacle.	$412
1750-0133	Conduit flexible 1.5" for radio installation center of dash to rear bench seat.	$270
1750-0134	Conduit flexible 1.5" for radio installation rear bench seat to pump panel.	$413
1750-0138	Work lights to be programmed "on" when park brake is set and switched in overhead console.	$111
1750-0140	Mount customer supplied antenna(s) on cab roof. Location(s): (1) each side of A/C condensor and (1) GPS antenna located top of vista officer side front corner. Includes coaxial cable terminating in the rear bench seat riser.	$156
1750-0142	Kussmual Auto-Eject 20 on each side of charger with a Red cover. Auto-eject on each side of cab to alow plug in on either side for battery charger with transfer switch in cab.	$1,346
1750-0144	Q2B brake switch to have a red cover (or bezel).	$34
1750-0145	Relocate the battery charger and (if applicable) air compressor to below the rear wall bench seat or rear center wall medical cabinet (if equipped).	$497
1750-0148	Turn signal Whelen 700 LED Chevron amber (PR). Locate [#LOC].	$603
1750-0149	Control push-button switch on officer's dash for Q2B siren brake.	$85
1750-0150	Block heater receptacle 20 amp Auto-Eject with a [#COL] cover. Location [#LOC].	$513
1750-0151	Receptacle inlet 15amp with a [#COL] cover. Location: [#LOC]	$259
1750-0153	Federal Signal model 462121 Renegade red strobe light for compartment warning light under over head console.	$237
1750-0154	Cab keyless entry touch pad(s) to lock/unlock all cab doors and cab/body electric locking roll-up door(s).	$520
1750-0155	Secondary keyless entry touch pad on officer side of cab. Pad to include any and all functions provided by the driver side pad.	$422
1750-0156	Special EQ2B power amplifier location. Amp to be located [#LOC].	$249
1750-0157	Special battery charger location. Charger to be located [#LOC].	$249
1750-0158	Dome Lts Red/White LED. Package includes two lights mounted in the front and two mounted in the rear of the cab. White light wired through door and light assembly switch. Red light through light assembly switch.	$726
1750-0159	3 Position Q2B momentary switch (activate/off/brake). Loc: [#LOC].	$180
1750-0161	Air compressor, Kussmaul model 091-9B-1, 120V.	$879
1750-0162	Battery charger Kussmaul model 091-35/10, 35 amp battery charger / 10 amp battery saver.	$736
1750-0163	Speedometer officer's side switch panel.	$278
1750-0164	Fuel gauge for officer. Location: officer switch panel.	$224
1750-0165	Conduit flexible 1.5" for radio installation center of dash to compartment under driver's seat.	$270
1750-0166	ATC override switch.	$180
1750-0167	Block heater to be wired to battery charger receptacle with a lighted on/off switch behind driver seat.	$180
1750-0168	Dome Lts Red/White 4" incandescent (5). Lights to be located two front and three rear. White light wired through door and light assembly mounted rocker switch. Red light through light assembly mounted rocker switch.	$654
1750-0171	Clamshell controller mounted on on driver's side of engine cover for Q2B.	$111
1750-0172	Special battery charger and air compressor location. Charger and air compressor to be located [#LOC].	$249
1750-0173	Rocker switch cover (or bezel) to be red. Location: [#LOC].	$34
1750-0174	Battery Charger Professional Mariner. Located outside driver side door area. The charger to be mounted under rear bench seat riser (centered) .	$1,251
1750-0176	Light Whelen model 70RA6FCR Super LED (4) split red/amber with chrome flanges. Horizontally mounted flashing lights on each of the interior cab door panels outboard mounted. Wire through door switch.	$1,446
1750-0177	Receptacle inlet 30amp twist lock with a [#COL] cover. Location: [#LOC].	$497
1750-0178	Windshield fan 8". Location: rear facing mounted on driver side 3x3 post.	$169
1750-0185	Vernier engine throttle in cab for use with jet dump operations. Locate in driver side overhead console or Lower Dash. Includes selector sw also in overhead console or Lower Dash.	$815
1750-0186	Dome Lts Red/White Incandescent additional. White light wire through door and light assembly mounted switch. Red light through light assembly mounted switch. Location: Centered rear of cab.	$128
1750-0187	Auto drain, Kussmaul model 091-9-089 120V. For use with air compressor 091-9B-1 only.	$184
1750-0188	DPF regeneration override switch.	$180
1750-0189	Gauge ambient temperature with digital display. Locate display on officer side switch panel.	$743
1750-0190	Dome Lts Red/White LED. Package includes two lights mounted in the front of the cab. White light wire through door and light assembly mounted switch. Red light through light assembly mounted switch.	$364
1750-0191	Cab quad headlights below front bumper in addition to standard headlights.	$458
1750-0194	Dome Lts Red/White LED additional (PR). White light wire through door and light assembly switch. Red light through light assembly switch. Location: Rear crew area.	$364

1750-0195	Cab dome lts red/white (2 red/white, 2 white) 4" incandescent. White light wired thru door and light assembly mounted rocker switch. Red light thru light assembly mounted rocker switch. Red/white located in front of cab, white located at rear cab doors.	$523
1750-0197	Clamshell controller mounted on driver's side of engine cover for the air horns.	$111
1750-0200	Whelen model 1510R red strobe hazard warning light. Locate in cab under over head console.	$242
1750-0203	Special location for battery charger indicator. Location: [#LOC].	$99
1750-0205	Handheld flashlight, orange Streamlight Vulcan flashlight with vehicle mount system. Location: [#LOC].	$229
1750-0206	Clamshell controller mounted on officer's side cab dash for Q2B and air horns.	$111
1750-0207	Lovered cover for battery charger or air compressor (EA). Finish to match cab interior.	$173
1750-0208	Light Whelen model PSA00FAR LED (4) amber. Horizontally mounted flashing strip light on each of the interior lower cab door panels outboard. Wire through door switch.	$708
1750-0209	Clamshell controller mounted on on officer's side of engine cover (knee height) for Q2B.	$111
1750-0210	Vernier engine throttle in cab for pump&roll operations. Locate in console or Lower Dash. Includes selector sw also in center console or Lower Dash.	$815
1750-0212	Battery charger and air compressor package 240 VAC/ 50 HZ.	$1,286
1750-0214	Mount customer supplied GPS antenna on cab roof. Location: [#LOC].	$156
1750-0215	Turn signal Whelen M6 LED arrow amber pair located [#LOC].	$583
1750-0219	Keyed battery/ignition switch.	$118
1750-0221	Xenon HID cab headlights. CIIX and TyphoonX only.	$1,599
1750-0222	12 volt electrical outlet in the cab wired through ignition. Location: [#LOC].	$54
1750-0223	Control push button switch center electrical cover offset to officer side for air horns	$85
1750-0231	Light Whelen model PSA00FAR LED (3) amber. Horizontally mounted flashing strip light on each of the interior lower cab door panels outboard. Wire through door switch.	$529
1750-0232	Incandescent Red/White domes and upper NFPA step lighting. Package includes two lights mounted in the front and two mounted in the rear of the cab. White light wire through door and light assembly mounted switch. Red light through light assembly mounted switch. Upper cab step areas to have for NFPA incandescent step lighting. Step lighting to be positioned per OEM recommendations for best compliance to NFPA.	$635
1750-0234	Digital speedometer officer's side overhead.	$516
1750-0248	Xenon HID cab headlights. Quest cab only.	$1,599
1750-0249	Dome/Pump panel Lts 4" Red/White LED top mount enclosed cab. Package includes (4) light assemblies evenly spaced over top mount enclosed pump panel. White light wire through door and light assembly switch. Red light through light assembly switch.	$1,692
1750-0250	Dome Lt Red/White LED additional (EA). White light wire through door and light assembly switch. Red light through light assembly switch. Location: Rear facing engine cover seat(s).	$182
1750-0252	Kussmaul mounting plate model 091-9H for 12v air compressor.	$72
1750-0253	Courtesy light for officer foot switch(es)wired through marker lights. Whelen model 0SC0EDCR clear light. Quest with heat to feet only.	$115
1750-0254	Stream Light model SL-20X-LED black handheld flashlight package. Includes (5) flashlights, (1) single 120V flashlight charger located officer side engine cover ahead of 3X3 and (1) 5-unit 120V charger located on officer engine cover rearward of 3X3.	$1,033
1750-0255	Stream Light Vulcan LED orange handheld lantern package. Includes (4) lanterns with 120V charger and vehicle mounts located in driver side rear wall medical cabinet on top shelf, (2) over (2). Includes shelf to be angled forward for ease of viewing.	$1,074
1750-0256	Auto eject block heater receptacle inlet 15amp with a [#COL] cover. Location: [#LOC].	$466
1750-0260	Battery charger, Super Smart, 20 amp with 120V Kussmaul HP air compressor.	$1,493
1750-0261	Clamshell controller mounted on on officer's side cab dash at "A" post for Whelen Howler.	$111
1750-0262	Auto transfer switch 120 volt. Includes 8 place breaker box. Allows interior receptacles to be powered by either shore power or generator. Ship to VanMor for installation.	$682
1750-0263	Radio speakers pair. Locate each side rear cab ceiling. Wiring to terminate in center dash for customer supplied radio(s).	$244
1750-0264	Block/oil pan heater on/off 110V switch. Location: inside driver door; rear of seat.	$153
1750-0267	Battery charger Kussmaul 4000, 45 amp with air compressor.	$2,183
1750-0268	Battery charger Kussmaul 40 amp model 1200 with 120V HP air compressor.	$2,174
1750-0269	12ga dedicated ground wire to center overhead console.	$70
1750-0270	Control push-button switch officer side (side facing) of center electrical cover for Q2B siren.	$85
1750-0271	Control push-button switch officer side (side facing) of center electrical cover for air horns.	$85
1750-0275	Receptacle inlet 30amp household with a [#COL] cover. Location: [#LOC].	$497
1750-0276	Battery charger Newmar model EV-40-12-1, 40amp.	$1,308
1750-0278	Light Whelen LED strip model PSC0CDCR to illuminate cab floor. Horizontally mounted on seat riser. Wire through door switch. Location: [#LOC]	$137
1750-0279	Clamshell controller mounted on on officer's side of engine cover for Q2B. Switch to be on top horz surface next to dash.	$111
1750-0283	LED cab headlights. CIIX and TyphoonX only.	$1,716
1750-0284	Switch additional guarded toggle. Location and Function: [#LOC].	$180
1750-0285	The chassis shall be pre-wired for installation of tire chains. Includes guarded toggle switch located on the driver side diagnostic panel.	$381

1750-0286	Receptacle block heater inlet 20amp with a [#COL] cover. Location: [#LOC].	$259
1750-0289	Battery charger Kussmaul 4000, 45 amp	$1,402
1750-0300	Radio AM/FM/CD/weather band w/auxiliary input port located [#LOC].	$634
1750-0302	Control push-button switch officer side ovherhead for Rumbler.	$85
1750-0304	Radio Pioneer DEH-3300UB AM/FM CD/USB located [#LOC].	$873
1750-0306	Radio speakers additional pair Pioneer TS-G1341R. Locate each side rear cab ceiling.	$311
1750-0310	Clamshell controller mounted on on officer's side of engine cover for Federal Signal Rumbler.	$111
1750-0314	Battery charger Kussmaul model 12 HO PIM, 20 amp. Includes model 091-189-12 indicator located adjacent to inlet receptacle.	$1,260
1750-0315	Rear upper window wipers (PR). Top mount enclosed cab only. Requires 4" cap.	$1,249
1750-0316	Switch horn button two position DOT/Rumbler.	$88
1750-0317	Auto-Eject receptacle inlet 20 amp located driver side rear of body above tail lights in diamond plate box with a yellow cover.	$621
1750-0319	Control push-button switch officer side (side facing) of center electrical cover for EQ2B siren.	$85
1750-0320	Conduit flexible .75" for radio installation distribution box to officer's overhead.	$270
1750-0321	ATC/KD driving lights (PR) with rubber housings. Includes switch in cab accessible to driver. Location: [#LOC].	$768
1750-0322	Light Whelen model PSC00FCR LED (4) clear. Vertically mounted flashing strip light with 14 flash patterns including steady burn shall be mounted on the lower cab step well areas (interior). The front doors shall have (1) strip light shall be located on forward step well wall (both sides). The rear doors shall have (1) strip light shall be located on rear step well wall (both sides). Wire through door switch.	$708
1750-0323	Engine tunnel to be fitted with a position activation switch to activate engine compartment lighting when not in the fully closed position.	$447
1750-0324	Air compressor, Kussmaul model 091-9 12V.	$845
1750-0325	Pigtail, minimum of 18" of wire for service of the battery charger and air compressor.	$42
1750-0326	Auto transfer switch 120 volt. Includes 2 place breaker box. Allows interior receptacles to be powered by either shore power or generator.	$663
1750-0327	Switch momentary to activate heat option contained in mirrors for 10 minutes. The heat will automatically turn itself off after the heat activation time period (10 minutes) has expired.	$174
1750-0328	Auto transfer switch 120 volt. Includes 8 place breaker box. Allows interior receptacles to be powered by either shore power or inverter.	$682
1750-0329	Cornering light relay circuits for lights in center of rear tandem wheel well. Includes (2) relays. Requires scene light option. Interlocked with park brake.	$368
1750-0330	Dome Lt Red/White LED additional (EA). White light wire through door and light assembly switch. Red light through light assembly switch. Location: centered between rear cab dome lights.	$182
1750-0331	Control push-button switch driver side (side facing) of center electrical cover for EQ2B siren.	$85
1750-0332	Dome lights Red/White incandescent. Package includes two lights mounted in the front and two mounted in the rear of the cab Trucklite 80 series with push style on/off button (may be used with Ford chassis). White light wire through door and light assembly mounted switch. Red light through light assembly mounted switch.	$502
1750-0333	Dome lights White incandescent. Package includes two lights mounted in the front and two mounted in the rear of the cab Trucklite 80 series with push style on/off button (may be used with Ford chassis). Lights wire through door and light assembly mounted switch.	$502
1750-0334	Dome lights White incandescent. Package includes two lights mounted in the front of the cab Trucklite 80 series with push style on/off button (may be used with Ford chassis). Lights wire through door and light assembly mounted switch.	$251
1750-0335	Metric speedometer, in English dominant main cab gauge cluster.	$1,931
1750-0336	Whelen traffic advisor control head (model TRACTRL1A) shall be mounted in the center overhead panel. The control head shall be wired to the main power switching circuit. There shall be a 50' control cable (model TAPVC50) ran from the control head to the rear of the body, coiled up for dealer supplied and installed traffic advisor.	$902
1750-0337	Garmin GSP 18X USB. May be mounted at E-ONE discretion on the cab roof within reach of cab 12VDC hot outlet(s).	$220
1750-0338	Radio Pioneer DEH-3300UB AM/FM CD/USB (with a pair of TS-D1302R speakers) located [#LOC].	$873
1750-0339	Radio speakers additional pair Pioneer TS-D1302R. Locate each side rear cab ceiling.	$311
1750-0340	Control push-button switch officer side (side facing) of center electrical cover for EQ2B siren brake.	$85
1750-0341	Transverse cab compartment dome light package (4) LED. Trucklite 44 series.	$517
1750-0342	Battery charger Kussmaul model 12 HO PIM, 20 amp. Includes model 091-189-12 indicator located behind driver's door adjacent to exterior handrail.	$1,260
1750-0343	Battery charger E-ONE LPC 20. 120 volt inlet, 20 amp output.	$541
1750-0344	Battery charger E-ONE LPC 40. 120 volt inlet, 40 amp output.	$823
1750-0350	Install customer supplied radio/intercom (ea). Loc: [#LOC].	$448
1750-0351	Kussmaul solar power charging system; model 092-1220-1. Location: Center rear cab roof.	$2,124
1750-0353	Dome Lts Red/White LED. Package includes two lights mounted in the front and three mounted in the rear of the cab. White light wired through door and light assembly switch. Red light through light assembly switch.	$924

1750-0355	Each 110 volt cab receptacle shall have a dedicated breaker within the breaker box. This is to provide each cab mounted receptacle (single outlet, duplex, etc. as applicable) with its own isolated circuit.	$238
1750-0356	Radio speaker (1). Locate center rear ceiling. Wiring to terminate in center overhead console for customer supplied radio.	$123
1750-0358	Antenna base Tessco P/N 90942 (NMO Motorola Style - also called MATM style) on cab roof package (5). Locations: (1) each side rearward of light bar (1) each side forward of the vista. These (4) shall be positioned side to side as required to prevent interference with light tower and its operation. There shall be (1) additional mounted on the officer side rear corner of the cab roof. All (5) shall have coax cable terminating below the officer seat.	$418
1750-0360	Auto-Eject receptacle inlet 30 amp 240 volt located [#LOC] and with a [#COL] cover.	$750
1750-0361	Cab quad headlights in front bumper in addition to standard headlights.	$458
1750-0364	Cab quad headlights below front bumper in addition to standard headlights. The headlights shall be mounted in a tread plate box that will extend the full depth and width of the hose trays mounted within the bumper ext. on each side.	$515
1750-0367	Stream Light Vulcan LED orange handheld lantern package. Includes (4) lanterns with 120V charger and vehicle mounts. Mount as directed during final inspection.	$1,074
1750-0368	Dome Lts Red/White 4" LED (6). Lights to be located two front and four rear. White light wired through door and light assembly mounted rocker switch. Red light through light assembly mounted rocker switch.	$2,030
1750-0369	On-Spot activation switch shall have a red flip up safety guard. The switch shall de located on the driver side overhead panel offset to the officer side as far as possible.	$45
1750-0370	Engine hourmeter in cab.	$141
1750-0372	12 VDC (or 24VDC) electrical outlet in the cab wired battery hot with 14AWG at each seated position. Outlets are shared within the same circuit.	$216
1750-0375	Switch console mounted to the driver side engine cover.	$142
1800-0001	Cooling for EGR engines. Includes charge air cooler.	$5,719
1800-0003	Coolant System Overflow Recovery System, CRS-150	$496
1800-0006	Remote coolant filter for engine cooling system (Cummins ISC and ISL engines only).	$489
1800-0013	Cooling system for use with Cyclone II X, Typhoon X, and Quest chassis. For use with 2010/2013 EPA engines. Includes coolant recovery system.	$6,444
1800-0014	Cooling system for use with Cyclone II X Hush Mid Engine chassis. Includes coolant recovery system.	$12,373
1800-0020	Cooling system for 98 EPA non-EGR engines. Includes charge air cooler.	$5,719
1800-0023	Cooling for Pre-2004 export engines. Includes charge air cooler.	$5,719
1800-0024	Ball valve drain for radiator ipo petcock valve.	$99
1800-0026	Plug shall be installed in drain of radiator IPO petcock valve.	$58
3000	**Body**	
3100-0000	Driver side body with full height 24" wide forward and 36" wide rearward compartmentation. Includes (1) 56" wide compartment over the wheel well.	$7,686
3100-0001	Driver side body with full height 30" wide forward and 36" wide rearward compartmentation. Includes (1) 56" wide compartment over the wheel well.	$8,223
3100-0002	Driver side body with full height 36" wide forward and 36" wide rearward compartmentation. Includes (1) 56" wide compartment over the wheel well.	$8,809
3100-0003	Driver side body with full height 42" wide forward and 42" wide rearward compartmentation. Includes (1) 56" wide compartment over the wheel well.	$9,415
3100-0004	Driver side body with full height 48" wide forward and 48" wide rearward compartmentation. Includes (1) 56" wide compartment over the wheel well.	$10,072
3100-0006	Driver side body with upper and lower compartmentation. Includes 24" wide forward and 36" wide rearward lower compartments and (3) opening upper compartments.	$8,070
3100-0007	Driver side body with upper and lower compartmentation. Includes 30" wide forward and 36" wide rearward lower compartments and (3) opening upper compartments.	$8,607
3100-0008	Driver side body with upper and lower compartmentation. Includes 36" wide forward and 36" wide rearward lower compartments and (3) opening upper compartments.	$9,182
3100-0009	Driver side body with upper and lower compartmentation. Includes 42" wide forward and 42" wide rearward lower compartments and (3) opening upper compartments.	$9,799
3100-0010	Driver side body with upper and lower compartmentation. Includes 48" wide forward and 48" wide rearward lower compartments and (3) opening upper compartments.	$10,457
3100-0011	Driver side body with upper and lower compartmentation. Includes 42" wide forward and 42" wide rearward lower compartments, (3) opening upper compartments with portable water tank storage with access door at rear.	$10,091
3100-0012	Driver side body with upper and lower compartmentation. Includes 48" wide forward and 48" wide rearward lower compartments, (3) opening upper compartments with portable water tank storage with access door at rear.	$10,771
3100-0013	Driver side body with full height 24" wide forward and 50" wide rearward extended compartmentation. Includes (1) 56" wide compartment over the wheel well.	$8,223
3100-0014	Driver side body with full height 30" wide forward and 50" wide rearward extended compartmentation. Includes (1) 56" wide compartment over the wheel well.	$8,763

3100-0015	Driver side body with full height 36" wide forward and 50" wide rearward extended compartmentation. Includes (1) 56" wide compartment over the wheel well.	$9,335
3100-0016	Driver side body with full height 42" wide forward and 56" wide rearward extended compartmentation. Includes (1) 56" wide compartment over the wheel well.	$9,952
3100-0017	Driver side body with full height 48" wide forward and 62" wide rearward extended compartmentation. Includes (1) 56" wide compartment over the wheel well.	$10,610
3100-0018	Driver side body with full height 24" wide forward and 50" wide rearward enhanced extended compartmentation. Includes (1) 56" wide compartment over the wheel well.	$8,470
3100-0019	Driver side body with full height 30" wide forward and 50" wide rearward enhanced extended compartmentation. Includes (1) 56" wide compartment over the wheel well.	$9,007
3100-0020	Driver side body with full height 36" wide forward and 50" wide rearward enhanced extended compartmentation. Includes (1) 56" wide compartment over the wheel well.	$9,580
3100-0021	Driver side body with full height 42" wide forward and 56" wide rearward enhanced extended compartmentation. Includes (1) 56" wide compartment over the wheel well.	$10,198
3100-0022	Driver side body with full height 48" wide forward and 62" wide rearward enhanced extended compartmentation. Includes (1) 56" wide compartment over the wheel well.	$10,856
3100-0024	Driver side body with full height 36" wide forward and 36" wide rearward compartmentation. Includes (1) 56" wide compartment over the wheel well.	$9,415
3100-0025	Driver side body with full height 42" wide forward and 42" wide rearward compartmentation. Includes (1) 56" wide compartment over the wheel well.	$10,072
3100-0026	Driver side body with full height 48" wide forward and 48" wide rearward compartmentation. Includes (1) 56" wide compartment over the wheel well.	$10,777
3100-0049	Driver side body with full height 24" wide forward and 36" wide rearward compartmentation. Includes (1) 56" wide compartment over the wheel well and 30 degree angle of departure.	$7,983
3100-0050	Driver side body with full height 30" wide forward and 36" wide rearward compartmentation. Includes (1) 56" wide compartment over the wheel well and 30 degree angle of departure.	$8,520
3100-0051	Driver side body with full height 36" wide forward and 36" wide rearward compartmentation. Includes (1) 56" wide compartment over the wheel well and 30 degree angle of departure.	$9,095
3100-0052	Officer half side body with 24" wide forward and 36" wide rearward compartmentation. Includes adjustable ladder tracks.	$4,142
3100-0053	Officer half side body with 30" wide forward and 36" wide rearward compartmentation. Includes adjustable ladder tracks.	$4,142
3100-0054	Stainless steel driver side body with full height 36" wide forward and 48" wide rearward compartmentation (interior). Includes (1) 60" wide compartment over the wheel well.	$9,677
3100-0055	Stainless steel driver side body with full height 48" wide forward and 48" wide rearward compartmentation (interior). Includes (1) 60" wide compartment over the wheel well.	$11,079
3100-0056	Stainless steel driver side body with full height 60" wide forward and 60" wide rearward compartmentation (interior). Includes (1) 60" wide compartment over the wheel well.	$11,856
3100-0059	Stainless steel driver side body with full height 48" wide forward and 60" wide rearward compartmentation (interior). Includes (1) 60" wide compartment over the wheel well.	$11,633
3100-0060	Stainless Steel officer half side body with 36" wide forward and 48" wide rearward compartmentation (interior). Includes adjustable ladder tracks.	$4,841
3100-0067	Driver side body with upper and lower compartmentation. Includes 60" wide forward and 42" wide rearward lower compartments and (3) opening upper compartments.	$11,188
3100-0068	Driver side body with upper and lower compartmentation. Includes 60" wide forward and 42" wide rearward lower compartments, (3) opening upper compartments with portable water tank storage with access door at rear.	$11,496
3100-0069	Driver side body with full height 60" wide forward and 42" wide rearward compartmentation. Includes (1) 56" wide compartment over the wheel well.	$10,777
3100-0074	Driver side body with full height 36" wide rearward compartmentation. Includes (1) 56" wide compartment over the wheel well.	$7,182
3100-0075	Driver side body with full height 36" wide rearward compartmentation. Includes (1) 56" wide compartment over the wheel well and 30 degree angle of departure.	$7,480
3100-0076	Stainless steel driver side body with full height 36" wide forward and 48" wide rearward compartmentation (interior). Includes (1) 60" wide compartment over the wheel well.	$9,677
3100-0077	Stainless steel driver side body with full height 48" wide forward and 48" wide rearward compartmentation (interior). Includes (1) 60" wide compartment over the wheel well.	$11,079
3100-0078	Stainless steel driver side body with full height 60" wide forward and 60" wide rearward compartmentation (interior). Includes (1) 60" wide compartment over the wheel well.	$11,856
3100-0079	Driver side body with full height 54" wide forward and 60" wide rearward compartmentation. Includes (1) 56" wide compartment over the wheel well. The compartment behind the wheel well has upper area for RM pump panel mounting.	$15,640
3100-0080	Driver side body with full height 48" wide forward and 60" wide rearward compartmentation (interior). Includes (1) 60" wide compartment over the wheel well.	$11,633
3100-0082	Stainless steel driver side body with full height 24" wide forward and 48" wide rearward compartmentation (interior). Includes (1) 60" wide compartment over the wheel well.	$8,278
3100-0084	Stainless steel driver side body with full height 24" wide forward and 48" wide rearward compartmentation (interior). Includes (1) 60" wide compartment over the wheel well.	$8,278

3100-0085	Driver half side body with 24" wide forward and 36" wide rearward compartmentation.	$3,844
3100-0087	Driver half side body with 30" wide forward and 36" wide rearward compartmentation.	$4,388
3100-0089	Driver half side body with 42" wide forward and 42" wide rearward compartmentation.	$4,708
3100-0091	Driver side body with full height 60" wide forward and 56" wide rearward compartmentation. Includes (1) 56" wide compartment over the wheel well.	$11,532
3100-0092	Driver side body with full height 50" wide enhanced extended rearward compartmentation. Includes (1) 56" wide compartment over the wheel well.	$7,966
3100-0093	Driver side body with full height 24" wide forward and 36" wide rearward compartmentation. Includes (1) 56" wide compartment over the wheel well.	$7,686
3100-0094	Driver side body with full height 30" wide forward and 36" wide rearward compartmentation. Includes (1) 56" wide compartment over the wheel well.	$8,223
3100-0095	Driver side body with full height 36" wide forward and 36" wide rearward compartmentation. Includes (1) 56" wide compartment over the wheel well.	$8,809
3100-0096	Driver side body with full height 42" wide forward and 42" wide rearward compartmentation. Includes (1) 56" wide compartment over the wheel well.	$9,415
3100-0097	Driver side body with full height 48" wide forward and 48" wide rearward compartmentation. Includes (1) 56" wide compartment over the wheel well.	$10,072
3100-0098	Driver side body with upper and lower compartmentation. Includes 24" wide forward and 36" wide rearward lower compartments and (3) opening upper compartments.	$8,070
3100-0099	Driver side body with upper and lower compartmentation. Includes 30" wide forward and 36" wide rearward lower compartments and (3) opening upper compartments.	$8,607
3100-0100	Driver side body with upper and lower compartmentation. Includes 36" wide forward and 36" wide rearward lower compartments and (3) opening upper compartments.	$9,182
3100-0101	Driver side body with upper and lower compartmentation. Includes 42" wide forward and 42" wide rearward lower compartments and (3) opening upper compartments.	$9,799
3100-0102	Driver side body with upper and lower compartmentation. Includes 48" wide forward and 48" wide rearward lower compartments and (3) opening upper compartments.	$10,457
3100-0103	Driver side body with upper and lower compartmentation. Includes 42" wide forward and 42" wide rearward lower compartments, (3) opening upper compartments with portable water tank storage with access door at rear.	$10,091
3100-0104	Driver side body with upper and lower compartmentation. Includes 48" wide forward and 48" wide rearward lower compartments, (3) opening upper compartments with portable water tank storage with access door at rear.	$10,771
3100-0105	Driver side body with full height 24" wide forward and 50" wide rearward extended compartmentation. Includes (1) 56" wide compartment over the wheel well.	$8,223
3100-0106	Driver side body with full height 30" wide forward and 50" wide rearward extended compartmentation. Includes (1) 56" wide compartment over the wheel well.	$8,763
3100-0107	Driver side body with full height 36" wide forward and 50" wide rearward extended compartmentation. Includes (1) 56" wide compartment over the wheel well.	$9,335
3100-0108	Driver side body with full height 42" wide forward and 56" wide rearward extended compartmentation. Includes (1) 56" wide compartment over the wheel well.	$9,952
3100-0109	Driver side body with full height 48" wide forward and 62" wide rearward extended compartmentation. Includes (1) 56" wide compartment over the wheel well.	$10,610
3100-0110	Driver side body with full height 24" wide forward and 50" wide rearward enhanced extended compartmentation. Includes (1) 56" wide compartment over the wheel well.	$8,470
3100-0111	Driver side body with full height 30" wide forward and 50" wide rearward enhanced extended compartmentation. Includes (1) 56" wide compartment over the wheel well.	$9,007
3100-0112	Driver side body with full height 36" wide forward and 50" wide rearward enhanced extended compartmentation. Includes (1) 56" wide compartment over the wheel well.	$9,580
3100-0113	Driver side body with full height 42" wide forward and 56" wide rearward enhanced extended compartmentation. Includes (1) 56" wide compartment over the wheel well.	$10,198
3100-0114	Driver side body with full height 48" wide forward and 62" wide rearward enhanced extended compartmentation. Includes (1) 56" wide compartment over the wheel well.	$10,856
3100-0115	Driver side body with full height 36" wide forward and 36" wide rearward compartmentation. Includes (1) 56" wide compartment over the wheel well.	$9,415
3100-0116	Driver side body with full height 42" wide forward and 42" wide rearward compartmentation. Includes (1) 56" wide compartment over the wheel well.	$10,072
3100-0117	Driver side body with full height 48" wide forward and 48" wide rearward compartmentation. Includes (1) 56" wide compartment over the wheel well.	$10,777
3100-0118	Driver side body with full height 24" wide forward and 36" wide rearward compartmentation. Includes (1) 56" wide compartment over the wheel well. Rear bottom corner of truck will be angled 30 degrees for a greater rear angle of departure.	$7,983
3100-0119	Driver side body with full height 30" wide forward and 36" wide rearward compartmentation. Includes (1) 56" wide compartment over the wheel well and 30 degree angle of departure.	$8,520
3100-0120	Driver side body with full height 36" wide forward and 36" wide rearward compartmentation. Includes (1) 56" wide compartment over the wheel well and 30 degree angle of departure.	$9,095
3100-0121	Stainless steel driver side body with full height 36" wide forward and 48" wide rearward compartmentation (interior). Includes (1) 60" wide compartment over the wheel well.	$9,677

3100-0122	Stainless steel driver side body with full height 48" wide forward and 48" wide rearward compartmentation (interior). Includes (1) 60" wide compartment over the wheel well.	$11,079
3100-0123	Stainless steel driver side body with full height 60" wide forward and 60" wide rearward compartmentation (interior). Includes (1) 60" wide compartment over the wheel well.	$11,856
3100-0124	Stainless steel driver side body with full height 48" wide forward and 60" wide rearward compartmentation (interior). Includes (1) 60" wide compartment over the wheel well.	$11,633
3100-0125	Driver side body with full height 60" wide forward and 42" wide rearward compartmentation. Includes (1) 56" wide compartment over the wheel well.	$11,532
3100-0126	Driver side body with upper and lower compartmentation. Includes 60" wide forward and 42" wide rearward lower compartments and (3) opening upper compartments.	$11,188
3100-0127	Driver side body with upper and lower compartmentation. Includes 60" wide forward and 42" wide rearward lower compartments, (3) opening upper compartments with portable water tank storage with access door at rear.	$11,496
3100-0128	Driver side body with full height 60" wide forward and 42" wide rearward compartmentation. Includes (1) 56" wide compartment over the wheel well.	$10,777
3100-0129	Driver side body with full height 36" wide rearward compartmentation. Includes (1) 56" wide compartment over the wheel well.	$7,182
3100-0130	Driver side body with full height 36" wide rearward compartmentation. Includes (1) 56" wide compartment over the wheel well and 30 degree angle of departure.	$7,480
3100-0131	Stainless steel driver side body with full height 36" wide forward and 48" wide rearward compartmentation (interior). Includes (1) 60" wide compartment over the wheel well.	$9,677
3100-0132	Stainless steel driver side body with full height 48" wide forward and 48" wide rearward compartmentation (interior). Includes (1) 60" wide compartment over the wheel well.	$11,079
3100-0133	Stainless steel driver side body with full height 60" wide forward and 60" wide rearward compartmentation (interior). Includes (1) 60" wide compartment over the wheel well.	$11,856
3100-0134	Stainless Steel Driver side body with full height 48" wide forward and 60" wide rearward compartmentation (interior). Includes (1) 60" wide compartment over the wheel well.	$11,633
3100-0135	Driver side body with full height 60" wide forward and 56" wide rearward compartmentation. Includes (1) 56" wide compartment over the wheel well. Top Mount eMAX Only.	$11,532
3100-0136	Driver side tunnel to hold: Lower section (3) Backboards. Upper section (1) Divider full length of tunnel, bolted at front of tunnel and held in place by a slot in the rear of tunnel for removability.	$547
3100-0137	Driver side compartment top storage box. Box to be smooth plate and painted job color with diamond plate top. Box to have a rear vertically hinged door with push-button latch. Box to have diamond plate lids with push button latches.	$1,632
3100-0138	Driver side body with upper and lower compartmentation. Includes 24" wide forward and 36" wide rearward lower compartments and (2) opening upper compartments.	$8,070
3100-0139	Compartment L1 to have rescue style interior compartment height.	$1,305
3100-0142	Driver side body with full height 42" wide forward and 48" wide rearward compartmentation. Includes (1) 56" wide compartment over the wheel well and upper area for recessed pike pole storage.	$9,415
3100-0143	Driver side body with full height 52" wide forward and 52" wide rearward compartmentation. Includes (1) 56" wide compartment over the wheel well.	$10,777
3100-0144	Driver side body with full height 36" wide forward and 50" wide rearward compartmentation. Includes (1) 56" wide compartment over the wheel well.	$9,580
3100-0145	Driver side body with full height 30" wide forward and 50" wide rearward compartmentation. Includes (1) 56" wide compartment over the wheel well.	$9,007
3100-0146	Driver side body with full height 24" wide forward and 50" wide rearward compartmentation. Includes (1) 56" wide compartment over the wheel well.	$8,470
3100-0148	Driver side body with full height 42" wide forward and 56" wide rearward compartmentation. Includes (1) 56" wide compartment over the wheel well.	$10,156
3100-0149	Driver side body with full height 36" wide forward and 42" wide rearward compartmentation. Includes (1) 56" wide compartment over the wheel well.	$10,072
3100-0151	Driver side body with 42" wide x 38" high wide forward lower compartmentation and 42" wide x 26.75" high forward upper compartmentation. 42" wide full height rearward compartmentation. Includes (1) 56" wide compartment over the wheel well.	$11,080
3100-0152	Driver side body with full height 36" wide forward and 50" wide rearward enhanced extended compartmentation. Includes (1) 56" wide compartment over the wheel well.	$10,187
3100-0153	Driver side body with full height 42" wide forward and 56" wide rearward enhanced extended compartmentation. Includes (1) 56" wide compartment over the wheel well.	$10,845
3100-0154	Driver side body with full height 48" wide forward and 62" wide rearward enhanced extended compartmentation. Includes (1) 56" wide compartment over the wheel well.	$11,550
3100-0155	Driver side body with full height 60" wide forward and 56" wide rearward enhanced extended compartmentation. Includes (1) 56" wide compartment over the wheel well.	$12,306
3100-0156	Driver side body with full height 30" wide forward and 36" wide rearward compartmentation. Includes (1) 56" wide compartment over the wheel well. Front and rear compartment opening height to be 66.75" high.	$8,802

3100-0159	Driver side body with full height 42" wide forward and 56" wide rearward enhanced extended compartmentation. Includes (1) 56" wide compartment over the wheel well and one (1) storage tunnel and access door at rear.	$13,342
3100-0160	Driver side body with full height 30" wide forward and 50" wide rearward enhanced extended compartmentation. Includes (1) 56" wide compartment over the wheel well.	$9,574
3100-0161	Driver side body with 42" wide x 30" high wide forward lower compartmentation and 42" wide x 34.75" high forward upper compartmentation. 42" wide full height rearward compartmentation. Includes (1) 56" wide compartment over the wheel well.	$12,137
3100-0162	2-Arm Ladder Rack. The ladder rack includes amber lights on each end to visually indicate when the rack is in motion. Ladder rack to hold storage box with (1) vertically hinged rearward and (2) horizontally hinged outboard (when ladder rack in the down position) diamond plate doors with push button latches. The outboard horizontally hinged door(s) to have chains set to open at approx 160 degrees. Forward section of the box to hold (2) backboards and the rearward section to hold (1) stokes basket.	$15,806
3100-0163	Driver side body with full height 50" wide forward and 50" wide rearward enhanced extended compartmentation. Includes (1) 56" wide compartment over the wheel well.	$10,845
3100-0164	Driver side body with full height 56" wide forward and 56" wide rearward enhanced extended compartmentation. Includes (1) 56" wide compartment over the wheel well.	$11,550
3100-0165	Driver side body with full height 62" wide forward and 62" wide rearward enhanced extended compartmentation. Includes (1) 56" wide compartment over the wheel well.	$12,253
3100-0166	Driver side tunnel to hold: [#LOC].	$547
3100-0167	Driver side body with full height 62" wide forward and 62" wide rearward enhanced extended compartmentation. Includes (1) 56" wide compartment over the wheel well.	$11,519
3100-0168	Driver side body with full height 30" wide forward and 50" wide rearward enhanced extended compartmentation. Includes (1) 56" wide compartment over the wheel well. Rear compartment to be pumper style enhanced extended (shallow upper and deep lower compartmentation).	$11,161
3100-0170	Driver side body with 62" wide full height forward enhanced extended compartment, 36" wide half height second forward compartment and 50" wide half height rearward compartmentation.	$15,875
3100-0171	Driver side body with full height 24" wide forward and 50" wide rearward extended compartmentation. Includes (1) 33" wide compartment over the wheel well and (1) Zico Overhead Ladder Rack.	$13,831
3100-0172	Driver side body with full height 24" wide forward and 56" wide rearward extended compartmentation. Includes (1) 56" wide compartment over the wheel well.	$8,969
3100-0173	Driver side body with full height 24" wide forward and 50" wide rearward enhanced extended compartmentation. Includes (1) 56" wide compartment over the wheel well. Rear compartment to be pumper style enhanced extended (shallow upper and deep lower compartmentation).	$11,859
3100-0174	Driver side body with upper and lower compartmentation. Includes 36" wide forward and 50" wide rearward extended lower compartments and (3) opening upper compartments.	$13,485
3100-0175	Driver side body with full height 36" wide forward and 36" wide rearward compartmentation. Includes (1) 56" wide compartment over the wheel well and one (1) storage tunnel.	$11,911
3100-0176	Driver side body with full height 36" wide forward and 50" wide rearward enhanced extended compartmentation. Includes (1) 56" wide compartment over the wheel well and one (1) storage tunnel.	$12,683
3100-0177	Driver side body with full height 42" wide forward and 42" wide rearward compartmentation. Includes (1) 56" wide compartment over the wheel well and one (1) storage tunnel.	$12,569
3100-0178	Driver side body with full height 42" wide forward and 56" wide rearward enhanced extended compartmentation. Includes (1) 56" wide compartment over the wheel well and one (1) storage tunnel.	$13,342
3100-0179	Driver side body with full height 48" wide forward and 48" wide rearward compartmentation. Includes (1) 56" wide compartment over the wheel well and one (1) storage tunnel.	$13,273
3100-0180	Driver side body with full height 48" wide forward and 62" wide rearward enhanced extended compartmentation. Includes (1) 56" wide compartment over the wheel well and one (1) storage tunnel.	$14,046
3100-0181	Driver side body with full height 60" wide forward and 42" wide rearward compartmentation. Includes (1) 56" wide compartment over the wheel well and one (1) storage tunnel.	$14,030
3100-0182	Driver side body with full height 60" wide forward and 56" wide rearward enhanced extended compartmentation. Includes (1) 56" wide compartment over the wheel well and one (1) storage tunnel.	$14,800
3100-0183	Driver side body with full height 36" wide forward and 50" wide rearward enhanced extended compartmentation (2008 body design) with (1) 56" wide compartment over the wheel well.	$14,788
3100-0185	Driver side body with full height 20" wide forward and 50" wide rearward extended compartmentation. Includes (1) 56" wide compartment over the wheel well.	$8,042
3100-0186	Driver side upper body extension. Does not include external upper doors. External framework and platework only.	$2,339
3100-0187	Stainless steel driver side body with full height 30" wide forward and 40" wide rearward compartmentation. Includes (1) 54" wide compartment over the wheel well.	$21,499
3100-0188	Stainless steel driver side body with full height 40" wide forward and 40" wide rearward compartmentation. Includes (1) 54" wide compartment over the wheel well.	$22,691

3100-0189	Stainless steel driver side body with full height 48" wide forward and 40" wide rearward compartmentation. Includes (1) 54" wide compartment over the wheel well.	$23,348
3100-0190	Stainless steel driver side body with full height 30" wide forward and 58" wide rearward enhanced extended compartmentation. Includes (1) 54" wide compartment over the wheel well.	$22,283
3100-0191	Stainless steel driver side body with full height 40" wide forward and 58" wide rearward enhanced extended compartmentation. Includes (1) 54" wide compartment over the wheel well.	$23,474
3100-0192	Stainless steel driver side body with full height 48" wide forward and 58" wide rearward enhanced extended compartmentation. Includes (1) 54" wide compartment over the wheel well.	$24,132
3100-0194	Stainless steel driver side body with full height, full depth 48" wide forward and 40" wide rearward compartmentation. Includes (1) 54" wide compartment over the wheel well.	$23,348
3100-0195	Driver 3/4 side body with full height 36" wide forward and 36" wide rearward compartmentation. Includes (1) 56" wide compartment over the wheel well.	$5,499
3100-0196	Driver half side body with (2) forward compartments (48" and 30" wide) and one rearward area for locating of side tank dump.	$4,286
3100-0197	Driver half side body with (2) forward compartments (48" and 30" wide) and (1) rearward compartment (24").	$5,044
3100-0198	Driver 3/4 side body with (2) lower forward compartments (48" and 30" wide), (3) upper compartments (54") and one lower rearward area for locating of side tank dump.	$5,929
3100-0199	Driver 3/4 side body with (2) lower forward compartments (48" and 30" wide), (3) upper compartments (54") and (1) lower rearward compartment (24").	$6,681
3100-0201	Driver full height side body with (2) lower forward compartments (48" and 30" wide), (3) upper compartments (54") and one lower rearward area for locating of side tank dump.	$7,571
3100-0202	Driver full height side body with (2) lower forward compartments (48" and 30" wide), (3) upper compartments (54") and (1) lower rearward compartment (24").	$8,324
3100-0203	Driver full height side body with (2) full height, rescue style, forward compartments (48" and 30" wide), (1) upper compartment (61" and offset rearward of the rack opening) and one lower rearward area for locating of side tank dump.	$7,571
3100-0204	Driver full height side body with (2) full height, rescue style, forward compartments (48" and 30" wide), (1) upper compartment (61" and offset rearward of the rack opening) and (1) lower rearward compartment (24").	$8,324
3100-0207	Driver full height side body with (2) lower forward compartments (48" and 30" wide), (3) upper compartments (54") with rear compartment face access door for portable tank storage and one lower rearward area for locating of side tank dump.	$8,767
3100-0208	Driver full height side body with (2) lower forward compartments (48" and 30" wide), (3) upper compartments (54") with rear compartment face access door for portable tank storage and (1) lower rearward compartment (24").	$9,519
3100-0209	Driver side body with full height 24" wide forward and 50" wide rearward enhanced extended compartmentation. Includes (1) 56" wide compartment over the wheel well.	$8,962
3100-0210	Driver full height side body with (2) full height, rescue style, forward compartments (48" and 30" wide), (2) upper compartment (40" wide) and (1) lower rearward compartment (24").	$8,324
3100-0211	Driver full height side body with (2) full height, rescue style, forward compartments (48" and 30" wide), (2) upper compartments (40" wide) and one lower rearward area for locating of side tank dump.	$7,571
3100-0212	(1) driver side roof top compartments with extra width to inboard side. Includes hinged raised compartment lid with turn latches, grab handle(s) and gas shock hold open and drain line(s) ran to below body. The lid to have (1) bracket mounted LED light and to be wired to door ajar indicator in cab.	$4,675
3100-0213	Stainless steel driver side body with full height 48" wide forward and 48" wide rearward compartmentation. Includes (1) 54" wide compartment over the wheel well.	$24,053
3100-0214	Stainless steel driver side body with full height 54" wide forward and 54" wide rearward compartmentation. Includes (1) 54" wide compartment over the wheel well.	$24,915
3100-0215	Stainless steel driver side body with full height 60" wide forward and 60" wide rearward compartmentation. Includes (1) 54" wide compartment over the wheel well.	$25,777
3100-0216	Compartment L1 to be 48.75" high in full depth lower area due to pipe routing for deck gun in hosebed storage pan.	$493
3100-0219	Driver half side body with 42" wide forward and 42" wide rearward compartmentation. Includes adjustable ladder tracks.	$4,708
3100-0220	Overhead Ladder Rack to be offset forward includes shifting compartment (rearward) over the wheel well.	$520
3100-0221	Driver half side tandem body with 30" wide forward and 30" wide rearward compartmentation.	$6,432
3100-0222	Driver half side tandem body with 42" wide forward and 42" wide rearward compartmentation.	$7,027
3100-0223	Driver half side tandem body with 60" wide forward and 54" wide rearward compartmentation.	$7,710
3100-0224	Driver 3/4 side tandem body with full height 30" wide forward and 30" wide rearward compartmentation. Includes (2) 51.5" wide compartments over the wheel well.	$7,448
3100-0225	Driver 3/4 side tandem body with full height 42" wide forward and 42" wide rearward compartmentation. Includes (2) 51.5" wide compartments over the wheel well.	$8,190
3100-0226	Driver 3/4 side tandem body with full height 60" wide forward and 54" wide rearward compartmentation. Includes (2) 51.5" wide compartments over the wheel well.	$9,043

3100-0227	Driver side tandem body with upper and lower compartmentation. Includes 30" wide forward and 30" wide rearward compartments and (4) opening upper compartments.	$10,912
3100-0228	Driver side tandem body with upper and lower compartmentation. Includes 42" wide forward and 42" wide rearward compartments and (4) opening upper compartments.	$12,104
3100-0229	Driver side tandem body with upper and lower compartmentation. Includes 60" wide forward and 54" wide rearward compartments and (4) opening upper compartments.	$13,494
3100-0230	Driver side tandem body with upper and lower compartmentation. Includes 30" wide forward and 30" wide rearward compartments and (4) opening upper compartments. Includes overhead rack opening centered between upper compartments.	$11,348
3100-0231	Driver side tandem body with upper and lower compartmentation. Includes 42" wide forward and 42" wide rearward compartments and (4) opening upper compartments. Includes overhead rack opening centered between upper compartments.	$12,588
3100-0232	Driver side tandem body with upper and lower compartmentation. Includes 60" wide forward and 54" wide rearward compartments and (4) opening upper compartments. Includes overhead rack opening centered between upper compartments.	$14,033
3100-0233	Driver side tandem body with full height 30" wide forward and 30" wide rearward compartmentation. Includes (2) 51.5" wide compartments over the wheel well.	$10,530
3100-0234	Driver side tandem body with full height 42" wide forward and 42" wide rearward compartmentation. Includes (2) 51.5" wide compartments over the wheel well.	$11,721
3100-0235	Driver side tandem body with full height 60" wide forward and 54" wide rearward compartmentation. Includes (2) 51.5" wide compartments over the wheel well.	$13,083
3100-0236	Driver side tandem body with full height 30" wide forward and 30" wide rearward compartmentation. Includes (2) 42" wide compartments over the wheel well and overhead rack opening centered between upper compartments.	$10,950
3100-0237	Driver side tandem body with full height 42" wide forward and 42" wide rearward compartmentation. Includes (2) 42" wide compartments over the wheel well and overhead rack opening centered between upper compartments.-	$12,189
3100-0238	Driver side tandem body with full height 60" wide forward and 54" wide rearward compartmentation. Includes (2) 42" wide compartments over the wheel well and overhead rack opening centered between upper compartments.	$13,606
3100-0243	Driver side body with full height 42" wide forward and 50" wide rearward compartmentation. Includes (1) 56" wide compartment over the wheel well.	$9,868
3100-0244	Driver half side tandem body with with 42" wide forward and one rearward area for locating of side tank dump rearward of the wheel well.	$7,273
3100-0245	Driver side body with full height 60" wide forward and 56" wide rearward compartmentation. Includes (1) 56" wide compartment over the wheel well. Side Mount eMAX only.	$11,532
3100-0246	Driver side body with upper and lower compartmentation. Includes 36" wide forward and 31" wide rearward lower compartments and (2) opening upper compartments.	$9,182
3100-0247	Driver side body with full height 46" wide forward and 56" wide rearward enhanced extended compartmentation. Includes (1) 56" wide compartment over the wheel well. L1 compartment to be Rescue Pumper style individual compartments.	$12,041
3100-0248	Driver side body with full height 50" wide forward and 50" wide rearward compartmentation. Includes (1) 56" wide compartment over the wheel well.	$11,532
3100-0249	Driver side body with full height 36" wide forward and 50" wide rearward compartmentation. Includes (1) 56" wide compartment over the wheel well.	$9,182
3100-0250	Driver side body with full height 60" wide forward and 62" wide rearward enhanced extended compartmentation. Includes (1) 56" wide compartment over the wheel well.	$12,682
3100-0251	Driver side body with full height 60" wide forward and 42" wide rearward compartmentation. Includes (1) 33" wide compartment over the wheel well and (1) Zico Overhead Portable Tank Rack. Rack to hold (1) 3000 gallon portable tank.	$16,073
3100-0252	Driver side body with full height 42" wide forward and 56" wide rearward enhanced extended compartmentation. Includes (1) 56" wide compartment over the wheel well.	$11,336
3100-0253	Driver full height side body with (3) full height, rescue style, forward compartments (39" and 39" wide and rearward of wheel well 24" wide),(1) upper compartment over the wheel well 56" wide.	$8,394
3100-0254	Driver side body with upper and lower compartmentation. Includes 48" wide forward and 62" wide enhanced extended rearward lower compartments and (3) opening upper compartments.	$11,415
3100-0257	Driver side body with full height 36" wide forward and 50" wide rearward enhanced extended compartmentation. Includes (1) 33" wide compartment over the wheel well and (1) Zico Overhead Ladder Rack.	$15,189
3100-0259	Driver side diamond plate roof top compartment. Includes vertically hinged access door at the rear with push button latch to be wired to door ajar indicator in cab.	$1,360
3100-0260	Driver side body with full height 36" wide forward and 45" wide rearward compartmentation. Includes (1) 56" wide compartment over the wheel well.	$10,112
3100-0262	Driver side body with full height 32" wide forward and 50" enhanced extended rearward compartmentation. Includes (1) 56" wide compartment over the wheel well.	$7,970
3100-0263	Driver side body with full height 54" wide forward and 48" wide rearward compartmentation. Includes (1) 56" wide compartment over the wheel well. Side Mount eMAX only.	$10,810

3100-0264	Driver side body with full height 26" and 56" wide forward compartments and 56" wide rearward compartmentation. Includes (1) 56" wide compartment over the wheel well. Side Mount eMAX only.	$12,734
3100-0265	Driver side diamond plate roof top compartment. Includes (2) hinged lift-up access doors with turn latches and grab handle(s) and (1) vertically hinged access door at the rear with push button latch to be. Each access door to be wired to door ajar indicator in cab.	$1,960
3100-0266	Driver side body with full height/full depth 60" wide front and 54" wide rear compartment. Includes (1) 60" wide compartment over the wheel well. Side mount SS eMAX only.	$14,070
3100-0267	Driver side tandem body with upper and lower compartmentation. Includes 60" wide forward and 54" wide rearward compartments and (1) opening forward upper compartment with painted panels rearward.	$14,441
3100-0270	Rear aluminum smooth plate painted vertically hinged door on driver side roof top compartments. Includes thumb latch and wiring for door ajar switch.	$186
3100-0271	Stainless steel driver side body with full height/full depth 36" wide front and 48" rear for reverse hinge compartment L1 door. Includes 54" wide compartment above rear wheels.	$24,585
3100-0273	Driver side roof top compartment contents: (2) 6" x 10' hard suction hoses (not included) stored vertically. Includes vertical partition around hard suction hoses.	$930
3100-0274	Driver side body with full height 36" wide forward and 56" wide rearward enhanced extended compartmentation. Includes (1) 56" wide compartment over the wheel well. Rescue Pumper individual style compartments.	$11,990
3100-0275	Driver side tandem body with upper and lower compartmentation. Includes 30" wide forward and 54" wide rearward compartments and (4) opening upper compartments. Includes offseting upper compartments forward due to deck gun location and access panel on upper rear compartment face to deck gun piping.	$12,112
3100-0276	(1) driver side roof top compartment forward of hard suction storage area and (2) roof top comaprtments over hard suction storage area. Includes hinged raised compartment lids with turn latches and grab handle(s). The lids to have (1) bracket mounted LED light and to be wired to door ajar indicator in cab. Includes partition between roof top compartment and hard suction storage area. Floor to be provided above the hard suction storage area to use remaining area above.	$2,577
3100-0277	Driver side tandem body with 60" wide forward and 54" wide rearward compartmentation. Forward compartment to be full height, rearward to be half height.	$9,501
3100-0278	Driver side body with full height 26" and 56" wide forward compartments and 56" wide rearward compartmentation. Includes (1) 56" wide compartment over the wheel well and one (1) storage tunnel. Side Mount eMAX only.	$15,200
3100-0279	Driver side body with full height 54" wide forward and 36" wide rearward compartmentation. Includes (1) 56" wide compartment over the wheel well. Side Mount eMAX only.	$10,429
3100-0280	Driver side roof top assembly. Does not include external upper doors or internal platework. External framework and platework only.	$1,367
3100-0281	Driver side body with full height 36" wide forward and 36" wide rearward compartmentation. Includes (1) 56" wide compartment over the wheel well and 30 degree angle of departure. L1 compartment to be Rescue Pumper style individual compartments.	$10,399
3100-0282	Driver full height side body with 66" wide forward and 42" wide rearward compartmentation. Includes (1) 56" wide compartment over the wheel well. For use with custom chassis only.	$8,558
3100-0283	Driver half side body with (2) forward compartments (48" and 30" wide) and one rearward area for locating of side tank dump. Includes (1) 20" wide compartment above the lower forward comaprtment.	$4,707
3100-0285	Driver side tandem body with full height 42" wide forward and 59" wide rearward compartmentation. Includes (2) 51.5" wide compartments over the wheel well.	$13,336
3100-0288	Stainless steel driver side body with full height 54" wide front and 54" rear with reduced upper depth for "T" tank. Includes 54" wide compartment over rear wheels.	$24,426
3100-0289	Stainless steel driver side body with full height 48" wide forward and 70" wide rearward enhanced extended compartmentation. Includes (1) 54" wide compartment over the wheel well.	$25,941
3100-0290	Driver side body with full height 48" wide forward and 48" wide rearward compartmentations. Includes (1) 56" wide compartment over the wheel well and one (1) storage tunnel. Tunnel to be behind L2 and L3 compartments only. L1 compartment to be full depth, full height with notch in upper rearward wall and boxed in cover for hard suction.	$14,601
3100-0291	Driver side body with full height 48" wide forward and 48" wide rearward compartmentation. Includes (1) 56" wide compartment over the wheel well and one (1) storage tunnel. Tunnel to be behind L2 and L3 compartments only. L1 compartment to be full depth, full height with notch in upper rearward wall and boxed in cover for hard suction.	$14,606
3100-0292	Stainless steel driver side body high side 60" front and 60" rear. Five compartments, tandem axle. For use with single arm overhead portable tank rack.	$16,239
3100-0293	Driver side tandem body with upper and lower compartmentation. Includes 30" wide forward and 54" wide rearward compartments and (4) opening upper compartments. Includes offseting upper compartments forward due to deck gun location and access panel on upper rear compartment face to deck gun piping.	$12,112
3100-0294	Driver side roof top compartment contents: (2) 6" x 10' hard suction hoses (not included) stored vertically.	$294

3100-0295	Driver side body with full height 26" and 56" wide forward compartments and 56" wide rearward compartmentation. Includes (1) 56" wide compartment over the wheel well.	$12,734
3100-0296	Driver side body with full height 26" and 56" wide forward compartments and 56" wide rearward compartmentation. Includes (1) 56" wide compartment over the wheel well and one (1) storage tunnel.	$15,200
3100-0298	Stainless steel driver side short Boston style body with low height 36" front and 40" rear and (2) lift-up doors above. Includes 60" wide fender panel. For use with suicide hinged L1 door.	$23,602
3100-0299	Driver side tandem body with full height (1) 60" wide forward and (1) 60" wide rearward compartmentation. For use with Rear Mount pump.	$16,196
3100-0300	Driver side body with full height/full depth 60" wide front and 54" wide rear compartment. Includes (1) 60" wide compartment over the wheel well. Top mount SS eMAX only.	$14,070
3100-0301	Stainless steel driver side body with full height 60" wide forward and 60" wide rearward compartmentation. Includes (1) 54" wide compartment over the wheel well.	$28,602
3100-0302	Stainless steel driver side body with full height 48" wide forward and 58" wide rearward enhanced extended compartmentation. Includes (1) 60" wide compartment over the wheel well.	$25,036
3100-0303	Stainless steel driver side body with full height 48" wide forward and 54" wide rearward compartmentation. Includes (1) 54" wide compartment over the wheel well.	$24,132
3100-0304	Driver side tandem body with (2) 34" wide forward and 54" wide rearward compartmentation. Forward compartments to be full height, rearward to be half height.	$10,585
3100-0305	(1) driver side roof top compartment (no divider). Includes (2) hinged raised compartment lids with turn latches and grab handle(s). Each lid to have (1) bracket mounted LED light and to be wired to door ajar indicator in cab.	$2,339
3100-0306	(2) driver side roof top compartments with removable floors and extra width to inboard side. Includes hinged raised compartment lids with turn latches, grab handle(s) and gas shock hold open and drain line(s) ran to below body. Each lid to have (1) bracket mounted LED light and to be wired to door ajar indicator in cab.	$5,832
3100-0307	(2) Driver side roof top compartments. Includes hinged raised aluminum smooth plate with black Scorpion coating (IPOS diamond plate) compartment lids with turn latches and grab handle(s). Each lid to have (1) bracket mounted LED light and to be wired to door ajar indicator in cab.	$2,638
3100-0308	Driver side body with full height 60" wide forward and 54" wide rearward compartmentation. Includes (1) 60" wide compartment over the wheel well. Top Mount SS eMAX Only.	$17,116
3100-0309	Driver side body with full height 30" and 60" wide forward compartments and 54" wide rearward compartmentation. Includes (1) 60" wide compartment over the wheel well. Side mount SS eMAX only.	$15,536
3100-0310	Driver side body with full height 30" and 60" wide forward compartments and 54" wide rearward compartmentation. Includes (1) 60" wide compartment over the wheel well, and a storage tunnel. Side mount SS eMAX only.	$18,544
3100-0311	Driver side body with full height 30" and 60" wide forward compartments and 54" wide rearward compartmentation. Includes (1) 60" wide compartment over the wheel well. Top mount SS eMAX only.	$15,536
3100-0312	Driver side body with full height 30" and 60" wide forward compartments and 54" wide rearward compartmentation. Includes (1) 60" wide compartment over the wheel well, and a storage tunnel. Top mount SS eMAX only.	$18,544
3100-0313	Driver side body with full height 50" wide forward and 42" wide rearward compartmentation. Includes (1) 56" wide compartment over the wheel well. Rear perimeter or body raised 3" for improved departure angle. Side Mount eMAX only.	$10,429
3100-0314	Driver full height side body with upper and lower compartmentation. Includes 42" wide forward and 56" wide rearward lower enhanced compartmentation and (3) opening upper compartments. For use with ladder storage in the hosebed	$10,198
3100-0316	Stainless steel driver side body with rescue style full height 30" front, 40" rear and 60" wide fender panel L2 compartment. For use with suicide hinged L1 door.	$23,602
3100-0317	Horizontal partition located in driver side roof top compartment over DOT bottles. Floor to be provided above the DOT bottles to use remaining area above.	$817
3100-0318	Driver side body with full height 48" wide forward and 56" wide rearward enhanced extended compartmentation. Includes (1) 56" wide compartment over the wheel well.	$11,550
3100-0319	Driver side roof top compartment contents: (1) 10' hard suction hose (not included) stored horizontally. Includes stop bracket rearward of hard suction hoses and Nylatron compartment flooring.	$468
3100-0320	(2) driver side roof top compartments with extra width to inboard side. Includes hinged raised compartment lids with turn latches, grab handle(s) and gas shock hold open and drain line(s) ran to below body. Each lid to have (1) bracket mounted LED light and to be wired to door ajar indicator in cab. Compartment lid construction shall be aluminum smooth plate IPO diamond plate painted Black Scorpion (rough finish).	$5,030
3100-0321	Driver side body with upper and lower compartmentation. Includes 42" wide forward and 42" wide rearward lower compartments, (3) opening upper compartments with portable water tank storage with access door at rear. Smooth plate compartment top painted black durabak.	$10,518

3100-0322	Driver 3/4 side body with (3) full height, rescue style, (2) forward compartments (48" and 30" wide) and (1) rearward compartment (24"). Includes (1) 56" wide compartment over the wheel well.	$7,079
3100-0323	Driver 3/4 side tandem stainless steel body with 35" front and 35" rear for flat back body design. Includes (2) 42" wide compartments over rear tandem wheels, with side dump valve between.	$10,551
3100-0324	Driver side roof top compartment. Includes vertically hinged access door at the rear with push button latch to be wired to door ajar indicator in cab.	$1,360
3100-0325	(2) driver side roof top compartments with extra width to inboard side. Includes hinged raised compartment lids with turn latches, grab handle(s) and gas shock hold open and drain line(s) ran to below body. Each lid to have (2) bracket mounted LED lights and to be wired to door ajar indicator in cab.	$4,758
3100-0326	Driver side tandem body with upper and lower compartmentation. Includes 30" wide forward and 30" wide rearward compartments and (4) opening upper compartments.	$11,614
3100-0327	Driver side body with full height 50" wide forward and 42" wide rearward compartmentation. Includes (1) 56" wide compartment over the wheel well. Rear perimeter or body raised 3" for improved departure angle.	$10,429
3105-0001	Enhanced extended forward compartmentation for Rescue Pumper. Includes 14" of additional interior width to the forward side compartments and 25" of additional depth in the forward 14" wide section (as applicable). Overall interior height will vary depending on additional option selections.	$1,951
3105-0002	Rear Mount forward body. Includes main side body structures and compartment L1/R1, L2/R2.	$13,293
3105-0005	Hosebed walkway. Includes forward body headboard mod and rear body module walkway end partition. Walkway to be a slip resistant material. Walkway located to [#LOC] of the hosebed.	$1,646
3105-0006	Rear Mount forward body compartments. Includes L1/R1 54" wide x 26" deep in the 56" lower area and 12" deep in the 12" upper area, L2/R2 56" wide x 26" deep in the 22" lower area and 12" deep in the 12" upper area.	$1,316
3105-0008	Rear Mount forward body. Includes main side body structures and compartment L1/R1, L2/R2 and a Zico overhead ladder rack (control located officer rear body/pump module).	$21,168
3105-0009	Rear Mount forward body compartments with driver side storage tunnel. Includes L1 - 72" wide x 26" deep in the 30" lower area and 12" deep in the 34" upper area, L2 - 56" wide x 12" deep, R1 - 72" wide x 26" deep in the 56" lower area and 12" deep in the 12" upper area, R2 - 56" wide x 26" deep in the 22" lower area and 12" deep in the 12" upper area.	$3,879
3105-0010	Rear Mount forward body. Includes main side body structures and compartment LT/RT, L1/R1, L2/R2. LT/RT (full width and 95" high) with lower storage areas (compartment opening 67" wide and same height as main body compartments). Includes full width forward storage pan and a pan in the rearward center/officer area between the driver roof top compartment. Transverse floor to run full width. Rear headboard to have area for routing of plumbing for preconnects located in rearward area. Area above preconnects (forward area) to be for storage of a stokes basket. L1/R1 54" wide x 26" deep in the 56" lower area and 12" deep in the 12" upper area, L2/R2 56" wide x 26" deep in the 22" lower area and 12" deep in the 12" upper area.	$27,081
3105-0011	Rear Mount forward body compartments with driver side storage tunnel. Includes L1 - 54" wide x 26" deep in the 30" lower area and 12" deep in the 38" upper area, L2 - 56" wide x 12" deep. R1 - 54" wide x 26" deep in the 56" lower area and 12" deep in the 12" upper area, R2 - 56" wide x 26" deep in the 22" lower area and 12" deep in the 12" upper area.	$1,316
3105-0014	Rear Mount forward body compartments. Includes L1/R1 - 60" wide x 26" deep in the 56" lower area and 12" deep in the 12" upper area, L2/R2 - 56" wide x 26" deep in the 22" lower area and 12" deep in the 12" upper area.	$2,171
3105-0015	Rear Mount forward body compartments. Includes L1/R1 - 66" wide x 26" deep in the 56" lower area and 12" deep in the 12" upper area, L2/R2 - 56" wide x 26" deep in the 22" lower area and 12" deep in the 12" upper area.	$3,026
3105-0016	Rear Mount forward body compartments. Includes L1/R1 - 72" wide x 26" deep in the 56" lower area and 12" deep in the 12" upper area, L2/R2 - 56" wide x 26" deep in the 22" lower area and 12" deep in the 12" upper area.	$3,879
3105-0017	Rear Mount forward body compartments with officer side Zico Overhead Ladder Rack. Includes L1/R1 - 54" wide x 26" deep in the 56" lower area and 12" deep in the 12" upper area, L2 - 56" wide x 26" deep in the 22" lower area and 12" deep in the 12" upper area, R2 - 33" wide x 26" deep in the 22" lower area and 12" deep in the 12" upper area (position of R2 depends on position of overhead ladder rack).	$1,316
3105-0018	Rear Mount forward body compartments with officer side Zico Overhead Ladder Rack. Includes L1/R1 - 60" wide x 26" deep in the 56" lower area and 12" deep in the 12" upper area, L2 - 56" wide x 26" deep in the 22" lower area and 12" deep in the 12" upper area, R2 - 33" wide x 26" deep in the 22" lower area and 12" deep in the 12" upper area (position of R2 depends on position of overhead ladder rack).	$2,171
3105-0019	Rear Mount forward body compartments with officer side Zico Overhead Ladder Rack. Includes L1/R1 - 66" wide x 26" deep in the 56" lower area and 12" deep in the 12" upper area, L2 - 56" wide x 26" deep in the 22" lower area and 12" deep in the 12" upper area, R2 - 33" wide x 26" deep in the 22" lower area and 12" deep in the 12" upper area (position of R2 depends on position of overhead ladder rack).	$3,026

3105-0020	Rear Mount forward body compartments with officer side Zico Overhead Ladder Rack. Includes L1/R1 - 72" wide x 26" deep in the 56" lower area and 12" deep in the 12" upper area, L2 - 56" wide x 26" deep in the 22" lower area and 12" deep in the 12" upper area, R2 - 33" wide x 26" deep in the 22" lower area and 12" deep in the 12" upper area (position of R2 depends on position of overhead ladder rack).	$3,879
3105-0022	Rear Mount forward body compartments with driver side storage tunnel. Includes L1 - 60" wide x 26" deep in the 30" lower area and 12" deep in the 38" upper area, L2 - 56" wide x 12" deep. R1 - 60" wide x 26" deep in the 56" lower area and 12" deep in the 12" upper area, R2 - 56" wide x 26" deep in the 22" lower area and 12" deep in the 12" upper area.	$2,171
3105-0023	Rear Mount forward body compartments with driver side storage tunnel. Includes L1 - 66" wide x 26" deep in the 30" lower area and 12" deep in the 38" upper area, L2 - 56" wide x 12" deep. R1 - 66" wide x 26" deep in the 56" lower area and 12" deep in the 12" upper area, R2 - 56" wide x 26" deep in the 22" lower area and 12" deep in the 12" upper area.	$3,026
3105-0025	Rear Mount forward body compartments with officer side storage tunnel. Includes L1 - 54" wide x 26" deep in the 56" lower area and 12" deep in the 12" upper area, L2 - 56" wide x 26" deep in the 22" lower area and 12" deep in the 12" upper area. R1 - 54" wide x 26" deep in the 30" lower area and 12" deep in the 38" upper area, R2 - 56" wide x 12" deep.	$1,316
3105-0026	Rear Mount forward body compartments with officer side storage tunnel. Includes L1 - 60" wide x 26" deep in the 56" lower area and 12" deep in the 12" upper area, L2 - 56" wide x 26" deep in the 22" lower area and 12" deep in the 12" upper area. R1 - 60" wide x 26" deep in the 30" lower area and 12" deep in the 38" upper area, R2 - 56" wide x 12" deep.	$2,171
3105-0027	Rear Mount forward body compartments with officer side storage tunnel. Includes L1 - 66" wide x 26" deep in the 56" lower area and 12" deep in the 12" upper area, L2 - 56" wide x 26" deep in the 22" lower area and 12" deep in the 12" upper area. R1 - 66" wide x 26" deep in the 30" lower area and 12" deep in the 38" upper area, R2 - 56" wide x 12" deep.	$3,026
3105-0028	Rear Mount forward body compartments with officer side storage tunnel. Includes L1 - 72" wide x 26" deep in the 56" lower area and 12" deep in the 12" upper area, L2 - 56" wide x 26" deep in the 22" lower area and 12" deep in the 12" upper area. R1 - 72" wide x 26" deep in the 30" lower area and 12" deep in the 38" upper area, R2 - 56" wide x 12" deep.	$3,879
3105-0030	Rear Mount forward body compartments w/dual storage tunnels. Includes L1/R1 - 54" wide x 26" deep in the 30" lower area and 12" deep in the 38" upper area, L2/R2 - 56" wide x 12" deep.	$1,316
3105-0031	Rear Mount forward body compartments w/dual storage tunnels. Includes L1/R1 - 60" wide x 26" deep in the 30" lower area and 12" deep in the 38" upper area, L2/R2 - 56" wide x 12" deep.	$2,171
3105-0032	Rear Mount forward body compartments w/dual storage tunnels. Includes L1/R1 - 66" wide x 26" deep in the 30" lower area and 12" deep in the 38" upper area, L2/R2 - 56" wide x 12" deep.	$3,026
3105-0033	Rear Mount forward body compartments w/dual storage tunnels. Includes L1/R1 - 72" wide x 26" deep in the 30" lower area and 12" deep in the 38" upper area, L2/R2 - 56" wide x 12" deep.	$3,879
3105-0034	Rear Mount forward body. Includes main side body structures and compartment L1/R1, L2/R2 and (1) storage tunnel.	$18,412
3105-0035	Rear Mount forward body. Includes main side body structures and compartment L1/R1, L2/R2 and (2) storage tunnels.	$22,296
3105-0036	Rear Mount forward body. Includes main side body structures and compartment LT/RT, L1/R1, L2/R2. LT/RT (full width and 95" high) with lower storage areas (compartment opening 67" wide and same height as main body compartments). Includes full width storage pan. Transverse floor to run full width. Rear headboard to have area for routing of plumbing for preconnects located in rearward area. The speedlay area to be stacked style and offset to rearward area of the transverse compartment. The upper speedlay area to hold (2) speedlay trays: (1) to hold - 200' of 2.5" DJ hose and (1) dry lay to hold - 100' of 1.75" DJ hose and 100' of 2.5" DJ hose. The lower speedlay area to hold (3) speedlay trays: (2) to hold 200' of 1.75" DJ hose each and (1) to hold 100' of 1.75" DJ hose. L1/R1 54" wide x 26" deep in the 56" lower area and 12" deep in the 12" upper area, L2/R2 56" wide x 26" deep in the 22" lower area and 12" deep in the 12" upper area.	$27,081
3105-0037	Transverse module (full width and height of the body) located forward of the body. Includes single 30" wide compartment opening per side (with a shallow lower area and a transverse upper area with full width smooth plate flooring). Upper area of transverse module to have diamond plate dunnage pan.	$9,894
3105-0038	Transverse module (full width and height of the body) located forward of the body. Includes single 36" wide compartment opening per side (with a shallow lower area and a transverse upper area with full width smooth plate flooring). Upper area of transverse module to have diamond plate dunnage pan.	$11,210
3105-0039	Transverse module (full width and height of the body) located forward of the body. Includes single 42" wide compartment opening per side (with a shallow lower area and a transverse upper area with full width smooth plate flooring). Upper area of transverse module to have diamond plate dunnage pan.	$12,526
3105-0040	Transverse module (full width and height of the body) located forward of the body. Includes single 50" wide compartment opening per side (with a shallow lower area and a transverse upper area with smooth plate flooring). Rearward transverse compartment area to have double preconnects with removable trays (side by side) and backboard storage (rearward of preconnects with velcro straps). Upper area of transverse module to have diamond plate dunnage pan.	$11,051

3105-0041	Transverse module (full width and height of the body) located forward of the body. Includes single 56" wide compartment opening per side (with a shallow lower area and a transverse upper area with smooth plate flooring). Rearward transverse compartment area to have double preconnects with removable trays (side by side) and backboard storage (rearward of preconnects with velcro straps). Upper area of transverse module to have diamond plate dunnage pan.	$12,367
3105-0042	Transverse module (full width and height of the body) located forward of the body. Includes single 62" wide compartment opening per side (with a shallow lower area and a transverse upper area with smooth plate flooring). Rearward transverse compartment area to have double preconnects with removable trays (side by side) and backboard storage (rearward of preconnects with velcro straps). Upper area of transverse module to have diamond plate dunnage pan.	$13,683
3105-0043	Transverse module (full width and height of the body) located forward of the body. Includes single 50" wide compartment opening per side (with a shallow lower area and a transverse upper area with smooth plate flooring). Rearward transverse compartment area to have triple preconnects with removable trays (side by side). Upper area of transverse module to have diamond plate dunnage pan.	$11,437
3105-0044	Transverse module (full width and height of the body) located forward of the body. Includes single 56" wide compartment opening per side (with a shallow lower area and a transverse upper area with smooth plate flooring). Rearward transverse compartment area to have triple preconnects with removable trays (side by side). Upper area of transverse module to have diamond plate dunnage pan.	$12,753
3105-0045	Transverse module (full width and height of the body) located forward of the body. Includes single 62" wide compartment opening per side (with a shallow lower area and a transverse upper area with smooth plate flooring). Rearward transverse compartment area to have triple preconnects with removable trays (side by side). Upper area of transverse module to have diamond plate dunnage pan.	$14,069
3105-0046	Transverse module (full width and height of the body) located forward of the body. Includes single 50" wide compartment opening per side (with a shallow lower area and a transverse upper area with smooth plate flooring). Rearward transverse compartment area to have double preconnects with removable trays (stacked). Upper area of transverse module to have diamond plate dunnage pan.	$11,312
3105-0047	Transverse module (full width and height of the body) located forward of the body. Includes single 56" wide compartment opening per side (with a shallow lower area and a transverse upper area with smooth plate flooring). Rearward transverse compartment area to have double preconnects with removable trays (stacked). Upper area of transverse module to have diamond plate dunnage pan.	$12,627
3105-0048	Transverse module (full width and height of the body) located forward of the body. Includes single 62" wide compartment opening per side (with a shallow lower area and a transverse upper area with smooth plate flooring). Rearward transverse compartment area to have double preconnects with removable trays (stacked). Upper area of transverse module to have diamond plate dunnage pan.	$13,943
3105-0049	Preconnect module (stacked). Includes area for (2) stacked preconnect, lower storage compartments with push button latches, running boards and upper area dunnage pan.	$9,894
3105-0051	Preconnect module to be capable of holding the following contents: Upper preconnect area to hold (1) 400' of 1.75" DJ with removable tray. Lower preconnect area to hold (1) 400' of 1.75" DJ with removable tray.	$772
3105-0052	Preconnect module to be capable of holding the following contents: Upper preconnect area to hold (2) 200' of 1.75" DJ with removable trays. Lower preconnect area to hold 200' of 2.5" DJ with removable tray.	$1,157
3105-0053	Preconnect module to be capable of holding the following contents: Upper preconnect area to hold (2) 200' of 1.75" DJ with removable trays. Lower preconnect area to hold (2) 200' of 1.75" DJ with removable trays.	$1,543
3105-0054	Rear Mount forward body. Includes main side body structures and compartment L1/R1, L2/R2.	$17,527
3105-0056	Preconnect module (stacked). Includes area for (2) stacked preconnect, lower storage compartments with push button latches, running boards, upper area dunnage pan and horizontal backboard storage with drop down diamond plate access door (wired to door ajar).	$7,319
3105-0057	Preconnect/Transverse module (full width and height of body). Includes (2) full width stacked speedlays (make standard size opening as used on normal width speedlay module). Each speedlay to be plumbed for use with 1.75" DJ hose. Area directly behind speedlays to have a transverse compartment (opening height to match body compartments). Transverse to include full width floor. Upper area to include a full width storage pan (forward of roof top compartments) and (1) pan located between the roof top compartments. Make pans as deep as practical.	$9,277
3105-0058	Transverse module (full width and height of the body) located forward of the body. Includes single 30" wide compartment opening per side (with a shallow lower area and a transverse upper area with smooth plate flooring). Lower transverse compartment area to have triple preconnects with removable trays (side by side). Above the speedlay area to be storage for stokes basket. Upper area of transverse module to have diamond plate dunnage pan.	$10,396

3105-0059	The outboard panels of the full width transverse module to be smooth plate overlays. These areas are to be seamless and painted job color.	$269
3105-0060	Transverse module (full width and height of the body) located forward of the body. Includes single 30" wide compartment opening per side (with a shallow lower area and a transverse upper area with smooth plate flooring). Rearward transverse compartment area to have triple preconnects with removable trays (stacked, (2) 1.5" on top and (1) 2.5" on bottom). Upper area of transverse module to have diamond plate dunnage pan.	$11,437
3105-0061	Backboard storage sleeve with retaining strap. Located in LT/RT compartment forward of the speedlays to be 5" wide x 20" high.	$839
3105-0062	Rear Mount body. Includes main side body structures and compartments L1/R1, L2/R2, L3/R3 and L4/R4. Includes interior compartment offset for pump panel location and mounting, rear body structure for rear mounted pump application.	$32,397
3105-0066	Rear Mount forward body compartments. Includes L1/R1 - 72" wide x 26" deep in the 56" lower area and 12" deep in the 12" upper area, L2/R2 - 56" wide x 26" deep in the 22" lower area and 12" deep in the 12" upper area. An externally-mounted compartment top shall be provided and constructed of a 1/8" (.125") aluminum smooth plate with black Scorpion coating (IPOS diamond plate).	$4,178
3105-0067	Transverse module (full width and height of the body) located forward of the body. Includes single 30" wide compartment opening per side (with a shallow lower area and a transverse upper area with smooth plate flooring). Rearward transverse compartment area to have triple preconnects with removable trays (stacked, (2) 1.5" on top and (1) 2.5" on bottom). Upper area of transverse module to have a dunnage pan made of aluminum smooth plate with black Scorpion coating (IPOS diamond plate). The running boards shall be constructed of aluminum smooth plate with black Scorpion coating (IPOS diamond plate)	$11,957
3110-0000	Center Slam Strip Rear End with (3) compartments- (2) lower and (1) upper and a diamond plate center strip for a Jet or Newton Dump application. Includes diamond plate panels.	$2,045
3110-0001	Center Slam Strip Rear End with (3) compartments- (2) lower and (1) upper and a smooth plate center strip for a Jet or Newton Dump application. Includes smooth plate panels.	$2,045
3110-0002	Upper and Lower Rear Compartment. Includes diamond plate panels.	$1,576
3110-0003	Upper and Lower Rear Compartment. Includes smooth plate panels.	$1,576
3110-0004	Full Height Rear Compartment. Includes diamond plate panels.	$1,106
3110-0005	Full Height Rear Compartment. Includes smooth plate panels.	$1,106
3110-0006	Full Height Rear Compartment with Upper Ladder Storage Compartment. Includes smooth plate panels. Includes area for storage of (1) 24', (1) 14', (1) 10' Attic, (2) pike poles and a drop down storage access door with push buton latches (wire to door ajar).	$1,888
3110-0007	Full Height Rear Compartment. Includes diamond plate panels, 30 degree angle of departure with flip down tailboard and handrails- (2) vertically on trailing edge of body and horizontally mounted handrail(s) below hosebed.	$2,418
3110-0008	Full Height Rear Compartment. Includes smooth plate panels, angled rear body with flip down tailboard and handrails- (2) vertically on trailing edge of body and horizontally mounted handrail(s) below hosebed.	$2,418
3110-0010	Full Height Rear Compartment with Upper Ladder Storage Compartment. Includes area for storage of (1) 24', (1) 14', (1) 10' Attic, (2) pike poles and a drop down storage access door with push button latches (wire to door ajar).	$1,888
3110-0011	Full Height Rear Compartment with Upper Storage Compartment and Officer Side Storage Tunnel. Includes smooth plate panels and storage access doors with push button latches.	$1,964
3110-0012	Full Height Rear Compartment with Upper Storage Compartment and Officer Side Ladder Tunnel. Includes diamond plate panels and storage access doors with push button latches.	$1,964
3110-0013	Full Height Rear Compartment with Officer Side Storage Tunnel. Includes smooth plate panels and storage access door with push button latch.	$1,028
3110-0014	Full Height Rear Compartment with Officer Side Ladder Tunnel and Recessed Traffic Advisor. Includes smooth plate panels and storage door with push buton latch..	$1,361
3110-0015	Full Height Rear Compartment with Officer Side Storage Tunnel. Includes diamond plate panels and storage access door with push button latch.	$997
3110-0016	Full Height Rear Compartment with Officer Side Ladder Tunnel and Recessed Traffic Advisor. Includes diamond plate panels and storage door with push button latch.	$1,361
3110-0017	Full Height Rear Compartment with diamond plate panels.	$922
3110-0018	Full Height Rear Compartment with smooth plate panels.	$922
3110-0019	Full Height Rear Compartment with recessed traffic advisor and smooth plate panels.	$1,287
3110-0020	Full Height Rear Compartment with recessed traffic advisor and diamond plate panels.	$1,287
3110-0021	Rear mount rear end with upper storage area and lower pump panel. Includes 12" bolt-on tailboard, smooth plate panels and upper access area door with push button latches.	$1,530
3110-0023	Rear mount rear end with upper storage area, lower pump panel area and officer side ladder/equipment tunnel. Includes 12" bolt-on tailboard, smooth plate panels, upper access area and ladder/equipment storage doors with push button latches.	$1,603
3110-0024	Stainless Steel rear end with lower center compartment. Includes 12" bolt-on diamond plate tailboard and handrails- (2) vertically on trailing edge of body and horizontally mounted handrail(s) below hosebed.	$2,185
3110-0025	Stainless steel rear end with lower center compartment.	$2,337

3110-0027	Rear of body to have un-painted extrusions with un-painted smooth plate body panels or just unpainted smooth plate to facilitate rear body striping.	$227
3110-0028	Rear body panels to be painted smooth plate.	$800
3110-0030	(2) bolt-on compartments. Locate (1) each side of B1. Each compartment includes a hinged diamond plate door (with 4" gap at top for connecting of hose stored in compartment) with D-Ring latch (wired into door ajar indicator), removable slat flooring and Gator Grip compartment top. Lower hosebed access step (one each side) to be mounted to inboard side of compartment.	$1,581
3110-0033	Single low rear compartment. For use with low hosebed. Includes diamond plate panels.	$830
3110-0035	Upper rear compartment depth to be approximately 25" deep.	$248
3110-0036	Upper and Lower Rear Compartment with Officer Side Ladder Tunnel. Includes diamond plate panels and storage access door with push button latches.	$2,454
3110-0037	Full Height Rear Compartment. Includes diamond plate panels, recessed traffic advisor and full width rear intermediate step located below the recessed advisor. B1 compartment to have no louvers. Includes access panel on bottom of compartment break to be 7" wide x 32" long. Panel to be centered front to back and side to side.	$2,022
3110-0038	Bolt-on diamond plate tailboard (full width of rear compartment). Includes the enhanced extended side compartment frame work with diamond plate compartment tops, (3) folding steps- (2) low and (1) high officer side with a 12" handrail (as applicable) and handrails- (2) vertically on trailing edge of body and horizontally mounted handrail(s) below hosebed.	$771
3110-0039	Bolt-on diamond plate tailboard (full width of body). Includes (2) handrails- (1) vertically on officer body and (1) horz below hosebed, aluminum ladder (angled) on offier side from tailboard to top edge of body and (3) Cast Products steps (staggered) on driver side.	$2,688
3110-0040	Compartment B1 to be 30" deep IPOS 26" deep.	$781
3110-0042	Single low rear compartment. For use with low hosebed. Includes smooth plate panels.	$881
3110-0043	Full Height Rear Compartment with Full Width Upper Storage Compartment. Includes officer side area for storage of (1) 10' Attic, (7) pike poles and a drop down storage access door with push buton latches (wire to door ajar). Includes driver side area for storage of backboards and a drop down storage access door with push buton latches (wire to door ajar). Includes (1) divider located 25" off officer's side wall. Includes diamond plate panels.	$2,245
3110-0044	Bolt-on diamond plate 10" tailboard (full width of body). Includes handrails- (2) vertically on trailing edge of body and horizontally mounted handrail(s) below hosebed.	$929
3110-0045	Upper and Lower Rear Compartment with Officer Side Ladder Tunnel. Includes smooth plate panels and storage access door with push button latches.	$2,454
3110-0046	Enhanced extended rear compartmentation for Rescue Pumper. Includes 14" of additional interior width to the rear side compartments and 25" of additional depth in the rearward 14" wide section. Overall interior height will vary depending on additional option selections.	$1,727
3110-0047	Full Height Rear Compartment with Full Width Upper Ladder Storage Compartment with smooth plate panels. Includes area for storage of (1) 24', (1) 14', (1) 10' Attic, (2) pike poles, (1) stokes basket, drop down storage access door with push button latches (wire to door ajar) and retaining straps for tunnel contents. Includes channels each side of ladder tunnel for discharges to terminate.	$2,830
3110-0048	Enhanced extended rear compartmentation for Rescue Pumper. Includes 14" of additional interior width to the rear side compartments and 25" of additional depth in the rearward 14" wide section. Overall interior height will vary depending on additional option selections. Includes bolt-on diamond plate tailboard (full width of rear compartment) and handrails- (2) vertically on trailing edge of body and horizontally mounted handrail(s) below hosebed.	$2,387
3110-0049	Bolt-on diamond plate tailboard (full width of rear compartment). Additional 10" of tailboard to run full width of body ("T" shaped tailboard). Includes the enhanced extended side compartment frame work with diamond plate compartment tops, (1) officer side lower area folding step. Driver side includes (1) upper hosebed mounted handrail (as applicable) and handrails- (2) vertically on trailing edge of body and horizontally mounted handrail(s) below hosebed.	$2,080
3110-0050	Upper Storage Compartment to hold (1) stokes basket in place of standard ladder components. Stokes basket to be located on officer side of storage tunnel. Stop bracket included.	$149
3110-0051	B1 compartment to have no door. Includes removal of compartment lights and door ajar.	$332
3110-0052	Bolt-on diamond plate tailboard (full width of rear compartment). Includes the enhanced extended side compartment frame work and handrails- (2) vertically on trailing edge of body and horizontally mounted handrail(s) below hosebed.	$990
3110-0053	Bolt-on diamond plate tailboard (full width of rear compartment). Additional 10" of tailboard to run full width of body ("T" shaped tailboard). Includes the enhanced extended side compartment frame work and handrails- (2) vertically on trailing edge of body and horizontally mounted handrail(s) below hosebed.	$2,080
3110-0054	Rear Mount Rear Body. Includes rear body side structures with compartment L3/R3, interior compartment offset for pump panel location and mounting, rear body structure for rear mounted pump application (includes painted job color smooth plate panels outboard of pump access/panel(s) and rear body hosebed.	$12,412
3110-0056	Compartment preconnect hose feed thru. Includes smooth plate doors with push button latches. Locate to [#LOC] just outboard of the rear pump panel.	$1,856

3110-0057	Lower Rear Compartment only. Upper section to be diamond plate panel. Includes diamond plate panels.	$957
3110-0060	Full Height Rear Compartment with Upper Ladder Storage Compartment. Includes diamond plate panels. Includes area for misc. storage and a drop down storage access door with push button latches (wire to door ajar).	$1,888
3110-0062	Upper Storage Compartment to hold (1) backboard in place of standard ladder components. Backboard to be located on officer side of storage tunnel. Includes stop bracket located at apporximately 80".	$267
3110-0063	Full Height Rear Compartment with Upper Storage Compartment. Includes smooth plate panels. Includes area for misc. storage and a drop down storage access door with push button latches (wire to door ajar).	$1,888
3110-0064	Upper Storage Compartment to have (1) bolt-in compartment 24" deep. Compartment for storage of misc. items. Includes holding center divider for lower hosebed short to allow room for compartment.	$531
3110-0065	Full Height Rear Compartment with Officer Side Ladder Tunnel. Includes officer side rear tunnel access door with latch (material to match rearend platework).	$1,028
3110-0066	Full Height Rear Compartment.	$922
3110-0067	Lower Rear Compartment only. Upper section to be diamond plate panel. Includes diamond plate panels. Additional diamond plate area just above compartment for mounting of recessed directional lightbar.	$5,317
3110-0068	Center Slam Strip Rear End with (3) compartments - (2) lower and (1) upper and a smooth plate center strip for a Jet or Newton Dump application. Includes smooth plate panels. Includes area above upper compartment for directional lightbar.	$4,223
3110-0069	Full Height Rear Compartment with Upper Storage Compartment and Officer Side Ladder Tunnel. Includes diamond plate panels and storage access doors with Tri-Mark model 030-1300 door latches. The upper tunnel to have on the officer side a stop at 128" and on the driver side a stop at 72" from rear of truck.	$2,389
3110-0070	Upper and Lower Rear Compartment. Includes smooth plate panels. B1 to be 36" wide due to enhanced extended feature and vertically hinged door(s).	$2,211
3110-0071	Spacer panel(s) for recess/warning lighting. Located:[#LOC]. Panel(s) tol be painted job color and to iinclude mounting area for any and all lighting mounted in area.	$258
3110-0073	Upper rear compartment depth to be approximately 29" deep.	$460
3110-0074	Full Height Rear Compartment with Officer Side Ladder Tunnel. Includes smooth plate panels and storage access door with push button latch. Includes a 18" channel for (2) tank inlets and (1) 5" jet dump located 16" up from bottom of compartment opening. Includes area above the channel for mounting of a booster reel. The lower opening to have double door and the upper opening to have a dutch door.	$4,203
3110-0075	Full Height Rear Compartment with Officer Side Ladder Tunnel. Includes diamond plate panels and storage access door with push button latch(es). Includes stepped upper horizontal tube to reduce hosebed height from ground over tank and driver side hosebed area.	$2,584
3110-0076	Full Height Rear Compartment with Officer Side Ladder Tunnel. Includes diamond plate panels and storage access door with D-ring latch.	$997
3110-0077	Provide modification to B1 officer side compartment opening. To include vertical extrusion and smooth plate panel with lower access door with push button latches for access to tow eye in compartment. Interior width of B1 to remain standard.	$1,157
3110-0078	Lower Rear Compartment only. Upper section to be smooth plate panel. Includes smooth plate panels.	$957
3110-0080	Center Slam Strip Rear End with smooth plate center strip for a Jet or Newton Dump application. Includes smooth plate low side panels and diamond plate upper panel.	$1,798
3110-0081	Full Height Rear Compartment with Officer Side Ladder Tunnel. Includes smooth plate panels and storage access door with D-ring latch.	$1,028
3110-0083	Half length offcir side tunnel. Reduces officer side upper compartment depths of R2 and R3 to 12" deep IPO 26".	$1,875
3110-0085	Upper and Lower Rear Compartment. Includes upper and lower sanded smooth plate panels. Upper rear compartment door to be offset to driver side constructed of smooth plate. Upper rear compartment to be 56" wide for little giant ladder storage. (2) 1.5" x 4" extrusions to be stacked between upper and lower compartments for directional light mounted under intermediate rear step.	$2,048
3110-0086	Bolt-on diamond plate 24" tailboard (full width of hosebed). Includes handrails- (2) vertically on trailing edge of body and horizontally mounted handrail(s) below hosebed.	$987
3110-0087	Full Height Rear Compartment with Upper Storage Compartment and Officer Side Ladder Tunnel. Includes smooth plate panels and storage access doors with Tri-Mark door latches.	$2,455
3110-0088	Full Height Rear Compartment with Officer Side Ladder Tunnel. Includes diamond plate panels and storage access door with push button latch. Officer side to have Rescue Pumper and Driver to have Pumper style enhanced extended.	$3,947
3110-0090	Handrail above B1 and below the hosebed will be "split". Each handrail to be approximately 18" and installed approximately 6" offset of centerline of B1 to allow for a 12" gap at center.	$464

3110-0093	Full Height Rear Compartment with Driver Side Storage Tunnel. Includes smooth plate panels and storage access door with push button latch.	$1,028
3110-0094	Full Height Rear Compartment with Upper Storage Compartment and Driver Side Storage Tunnel. Includes smooth plate panels and storage access doors with push button latches.	$1,964
3110-0095	Full Height Rear Compartment with Driver and Officer Side Storage Tunnels. Includes smooth plate panels and storage access doors with push button latches.	$1,136
3110-0096	Full Height Rear Compartment with Upper Storage Compartment, Driver and Officer Side Storage Tunnels. Includes smooth plate panels and storage access doors with push button latches.	$2,198
3110-0097	Bolt-on smooth plate tailboard (full width of rear compartment). Tailboard to include gator grip and be black duraback painted. Includes the enhanced extended side compartment frame work (2008 design) and handrails- (2) vertically on trailing edge of body and horizontally mounted handrail(s) below hosebed. Handrails to include center stanchion.	$1,498
3110-0099	NFPA hose bed access ladder. Zico model RL12 for increased visibility of rear outboard body mounted DOT/NFPA lighting. Includes required step lights and additional hand rail(s) if applicable. Location: [#LOC].	$1,553
3110-0100	Backboard stop bracket to be located approximately 76" back in officer side of ladder tunnel.	$213
3110-0101	Compartment preconnect hose feed thru. Includes smooth plate doors with push button latches. Locate to [#LOC] just outboard of the rear pump panel.	$1,124
3110-0102	Upper Storage Compartment to hold (2) backboards in place of standard ladder components. Backboard to be located on officer side of storage tunnel. Includes stop bracket located at approximately 74".	$531
3110-0103	Bolt-on diamond plate tailboard (full width of rear compartment). Includes the enhanced extended side compartment frame work with diamond plate compartment tops (embossied IPO Gator Grip due to department mounting of hose storage connectors in this area) and (1) driver and officer side lower area folding step (NO steps on driver or officer side upper areas). Main hosebed access is to be from the driver side of the pump module access ladder). Includes handrails- (2) vertically on trailing edge of body and horizontally mounted handrail(s) below hosebed.	$870
3110-0104	(2) vertically mounted booster reel roller assemblies. Locate (1) each side inboard side of the enhanced extended area (as far outboard as applicable). For use with rear compartment mounted booster reel.	$434
3110-0105	Upper Storage Compartment to hold (1) 17' Little Giant ladder and (1) backboard in place of standard ladder components. Little giant ladder to be located on officer side of storage tunnel stop bracket included approximately 113" back from opening, ladder to be stored in unfolded position. Backboard to be located in aluminum box hanging from upper area of officer side tunnel. Tunnel divider to be held 6" short from opening.	$531
3110-0106	Rear Mount pump/ladder tunnel access door. Includes single center mounted D-Ring latch and (2) hold open devices. Door to be [#LOC]. Door to open to 90 degrees and includes pull strap for access from ground.	$438
3110-0107	Upper and Lower Rear Compartment. Includes smooth plate panels. Includes a 19" channel for (2) tank inlets and (1) 5" jet dump located between the upper and lower non-transverse style compartments. The lower compartment height to be 15".	$3,379
3110-0109	Upper and Lower Rear Compartment. Includes smooth plate lower panels outboard of B1 and diamond plate upper panels outboard of B2. The B1 compartment to be 42" wide and B2 compartment to be 38" wide. Includes (2) 1.5" x 4" extrusions to be stacked between upper and lower compartments for directional light mounted under intermediate rear step.	$3,298
3110-0110	Rear Mount Rear Body. Includes rear body side structures with compartment L3/R3, interior compartment offset for pump panel location and mounting, rear body structure for rear mounted pump application. Includes painted job color smooth plate panels (and storage access door with push button latch, if applicable) outboard of pump access/panel(s) and rear body hosebed.	$8,765
3110-0111	Upper and Lower Rear Compartment. Includes smooth plate lower panels outboard of B1 and diamond plate upper panels outboard of B2. Includes (2) 1.5" x 4" extrusions to be stacked between upper and lower compartments for directional light mounted under intermediate rear step and back-up camera to be mounted centered in front of directional lightbar. The upper compartment to be offset to officer side due to rear discharge options.	$3,298
3110-0113	Bolt-on diamond plate 12" tailboard with Gator Grip (full width of body). Includes hand rails- (2) vertically on trailing edge of body and horizontally mounted hand rail(s) below hose bed.	$929
3110-0114	Bolt-on diamond plate 12" tailboard full width of body with Bustin Tread. This provides a flat back body design. Includes hand rails, (2) vertically on trailing edge of body and horizontally mounted hand rail below hose bed.	$929
3110-0115	Bolt-on diamond plate 12" tailboard with Gator Grip (full width of body). Includes (2) squared off beavertails with hand rails- (2) vertically on trailing edge of body and horizontally mounted hand rail below hose bed.	$697
3110-0116	Bolt-on diamond plate 12" tailboard full width of body with Bustin Tread. Includes (2) squared off beavertails with hand rails, (2) vertically on trailing edge of beavertails and horizontally mounted hand rail below hose bed.	$697
3110-0117	Bolt-on diamond plate 20" tailboard with Gator Grip. Includes hand rails- (2) vertically on trailing edge of body and horizontally mounted hand rail(s) below hose bed.	$864

3110-0118	Bolt-on diamond plate 20" tailboard between rear side compartments with Bustin Tread. Includes hand rails (2) vertically on trailing edge of body and horizontally mounted hand rail below hose bed.	$864
3110-0119	Bolt-on diamond plate 20" tailboard with Gator Grip (full width of body). Includes (2) squared off beavertails with hand rails- (2) vertically on trailing edge of body and horizontally mounted hand rail(s) below hose bed.	$864
3110-0120	Bolt-on diamond plate 20" tailboard with Bustin Tread (full width of body). Includes (2) squared off beavertails with hand rails, (2) vertically on trailing edge of body and horizontally mounted hand rail below hose bed.	$864
3110-0121	Bolt-on diamond plate 20" tailboard with Gator Grip (full width of body). Includes (2) slanted beavertails with removable outer panels and hand rails- (2) vertically on trailing edge of body and horizontally mounted hand rail(s) below hose bed.	$864
3110-0122	Bolt-on diamond plate 20" tailboard with Bustin Tread (full width of body). Includes (2) slanted beavertails and hand rails, (2) vertically on trailing edge of body and horizontally mounted hand rail below hose bed.	$864
3110-0123	Lower rear stainless steel short compartment B1, 46" wide x 35" high x 26" deep. Includes bolt-on intermediate step above. Entire rear panel to be smooth aluminum plate for Chevron graphics.	$957
3110-0124	Lower rear stainless steel tall compartment B1, 46" wide x 45" high x 26" deep. Includes bolt-on intermediate step above. Entire rear panel to be smooth aluminum plate for Chevron graphics.	$1,106
3110-0125	Upper Storage Tunnel to have bolt-in side panels to enclose the sides of the tunnel.	$531
3110-0126	Upper and Lower Rear Compartment with Driver and Officer Side Storage Tunnels. Includes smooth plate panels. Includes a 19" area for (1) tank inlet and (1) 5" jet dump located between the upper and lower compartments. The lower compartment height to be 17". The upper compartment to be full height and depth, includes bolt-in floor for access to plumbing components. Driver side tunnel opening to be narrowed to allow non-recessed folding step.	$3,626
3110-0127	Bolt-on diamond plate 18" tailboard (full width of body). Includes (2) slanted beavertails (no stanchions) with removable outer panels and handrails- (2) vertically on trailing edge of body and horizontally mounted handrail(s) below hosebed. Upper beavertail to be 8.75 due to folding steps.	$1,080
3110-0128	Full Height Rear Compartment with smooth plate panels. The rear compartment to be 36" due to the enhanced extended compartment and double door options.	$1,217
3110-0129	Full Height Rear Compartment with Officer Side Storage Tunnel. Includes smooth plate panels and storage access door with push button latch. The rear compartment to be 36" due to the enhanced extended compartment and double door options.	$1,324
3110-0130	Rear end tanker. Includes smooth plate upper and lower panels and a smooth plate center strip for a Jet or Newton Dump application.	$554
3110-0131	Full Height Rear Compartment with Officer Side Storage Tunnel. Includes smooth plate panels and storage access door with push button latch. Includes stepped upper horizontal tube to reduce hosebed height from ground over tank area.	$2,012
3110-0132	Bolt-on diamond plate tailboard (full width of rear compartment). Additional 10" of tailboard to run full width of body ("T" shaped tailboard). Includes the enhanced extended side compartment frame work and handrails - (1) vertically on trailing edge of body opposite side of ladder and handrail(s) horizontally below hosebed.	$2,080
3110-0133	Rear end tanker. Includes smooth plate upper and lower panels, a smooth plate center strip for a Jet or Newton Dump application and upper area access door for thru the tank storage.	$652
3110-0136	Full Height Rear Compartment with Upper Ladder Storage Compartment. Includes smooth plate panels. Includes area for storage of (1) 24', (1) 14', (1) 10' Attic, (4) pike poles and a lift-up storage access door with push buton latches (wire to door ajar). Lift-up door to use plunger style hold open device. Includes "NO STEP" tags located on outboard ends and positioned to be read from the open position of the door.	$1,888
3110-0140	Rearend assembly with 3/4 height rear end and dual dry chemical access doors. The upper access areas to either side of the center section to provide access to the dry chemical vessel and the nitorgen bottle(s). For use with Industrial products only.	$830
3110-0142	Upper rear compartment stepped for use newton dump.	$173
3110-0143	(2) bolt-on compartments. Locate (1) each side of B1. Each compartment includes a hinged smooth plate door with D-Ring latch (wired into door ajar indicator), removable slat flooring and Gator Grip compartment top. Driver side compartment to be 37" high and officer side compartment to be 31" high. Lower hosebed access step (two driver side and one officer side) to be mounted to inboard side of compartment.	$1,826
3110-0144	Bolt-on diamond plate tailboard (full width of rear compartment). Additional 10" of tailboard to run full width of body ("T" shaped tailboard). Includes the enhanced extended side compartment frame work and handrails - (1) vertically on trailing edge of body opposite side of ladder and handrail(s) horizontally below hosebed on trailing edge of the intermediate step.	$2,080
3110-0145	Full Height Rear Compartment with smooth plate panels.	$1,168
3110-0146	Rear end with full height compartment. Includes diamond plate panels and double upper extrusions below hosebed area. Interior of compartment to be transverse side to side.	$1,353

3110-0147	Bolt-on diamond plate 16" tailboard (full width of body). Includes (2) slanted beavertails with raised stanchions post with E-ONE logo style mounts and removable outer panels, handrails- (2) vertically on trailing edge of body/beavertail and horizontally mounted handrail below hosebed on trailing edge of intermediate step.	$697
3110-0148	Bolt-on tailboard compartments located to the driver and officer side of B1. The bolt-on tailboard compartments to be 64" high with embossed diamond plate compartment tops. The compartments includes hinged smooth plate door with 1/4 turn latch(es). The each compartment to have 4" gap at top of the door. Each door to be wired into door ajar indicator.	$2,668
3110-0149	Full Height Rear Compartment with Upper Ladder Storage Compartment. Includes smooth plate panels. Includes area for storage of (1) 24', (1) 14', (1) 10' Attic, (2) pike poles and a drop down storage access door with Tri-Mark latch (wire to door ajar).	$1,958
3110-0150	Upper Storage Compartment to hold (1) 17' Little Giant ladder. Little giant ladder to be located on driver side of storage tunnel stop bracket included approximately 58" back from opening.	$531
3110-0151	Bolt-on diamond plate tailboard (full width of rear compartment). Additional 5.5" of tailboard to run full width of body ("T" shaped tailboard). Includes the enhanced extended side compartment frame work with diamond plate compartment tops, (1) officer side lower area folding step. Driver side includes (1) upper hosebed mounted handrail (as applicable) and handrails- (2) vertically on trailing edge of body and horizontally mounted handrail(s) below hosebed.	$2,080
3110-0152	Upper Storage Compartment divider to be located offset 26" from officer side. Officer side of divider to be enclosed to 86" deep and driver side of divider to be enclosed to 72" deep.	$531
3110-0153	Rear access into the enhanced extended portion of the L2 and R2 compartments. Includes smooth plate access doors with (2) push button latches each (wired to door ajar).	$681
3110-0154	Bolt-on diamond plate 6" tailboard (full width of body). Includes handrails- (2) vertically on trailing edge of body and horizontally mounted handrail(s) below hosebed.	$962
3110-0156	Upper Storage Compartment to hold (1) 17' Little Giant ladder, (1) 24' 2-section ladder, (1) 14' roof ladder, (1) 10' attic ladder and (2) pike poles.	$531
3110-0157	Rear end with Upper Storage Compartment. Includes smooth plate panels. Includes area for misc. storage and vertical hinged double doors with D-ring latch (wire to door ajar).	$1,888
3110-0158	Bolt-on diamond plate 16" tailboard (full width of body). Includes handrails- (2) vertically on trailing edge of body and horizontally mounted handrail(s) below hosebed.	$1,074
3110-0160	(2) bolt-on compartments. Locate (1) each side of B1 - driver side to have 11.5" wide x 46" high opening and officer side to have 14.5" wide x 29" high opening. Each compartment to be 21" deep. Each compartment includes a hinged smooth plate door (with 4" gap at top for connecting of hose stored in compartment) with D-Ring latch (wired into door ajar indicator), removable slat flooring and Gator Grip compartment top. Lower hosebed access step (two on the driver side and one on the officer side) to be mounted to inboard side of compartment.	$1,703
3110-0161	Bolt-on diamond plate 25" tailboard (full width of body). Includes (2) squared off beavertails (no stanchions) with removable outer panels and (2) 48" handrails vertically on beavertails and (1) 36" horizontally below hosebed.	$1,064
3110-0162	Full Height Rear Compartment with Officer Side Storage Tunnel. Includes smooth plate panels and storage access door with push button latch. B1 compartment opening to be 35" wide due to officer side tailboard compartment.	$1,176
3110-0163	Enhanced extended rear end with tall rear compartment and with officer side storage tunnel. Driver side enhanced extended to be be Pumper style and officer to be Recue Pumper style.Officer side hosebed extrusion to be stepped for storage tunnel. Included are diamond plate tailboard full width of the rear compartment, smooth plate panels and storage access door (wired to door ajar) with push button latch.	$2,220
3110-0164	Bolt-on diamond plate 24" tailboard (full width of body). Includes (2) squared off 12" deep beavertails (no stanchions) with removable outer panels and handrails- (2) vertically on trailing edge of body and horizontally mounted handrail(s) below hosebed. The outer beavertail panels to be aluminum smooth plate to allow for chevron striping. For use with swivel style rear tank dump only.	$1,186
3110-0165	Full Height Rear Compartment with Driver Side Storage Tunnel. Includes smooth plate panels and storage access door with push button latch. The rear compartment to be 36" due to the enhanced extended compartment and double door options.	$1,324
3110-0166	Full height rear compartment with officer side storage tunnel. Includes bolt-on intermediate step above. SS eMAX only.	$1,228
3110-0167	Full Height Rear Compartment with Upper Storage Compartment and Officer Side Ladder Tunnel. Includes smooth plate panels and storage access doors with Tri-Mark model 030-1300 door latches. The upper tunnel access door to be horizontally hinged lift-up with gas shock. The upper tunnel to have on the officer side a stop at 128" and on the driver side a stop at 72" from rear of truck.	$2,389
3110-0168	Bolt-on diamond plate tailboard (full width of rear compartment). Additional 5" of tailboard to run full width of body ("T" shaped tailboard). Includes the enhanced extended side compartment frame work, (1) officer side lower area folding step and handrails- (2) vertically on trailing edge of body and horizontally mounted handrail(s) below hosebed.	$1,518
3110-0170	Lower Rear Compartment with Officer Side Storage Tunnel. Includes smooth plate panels and storage access door with push button latch.	$1,136

3110-0172	Bolt-on diamond plate 14" tailboard full width of body with Bustin Tread, provides flat back body design. Includes rear of body hand rails.	$984
3110-0173	Rear body smooth ladder door be painted job color finish to match body color.	$353
3110-0175	Lower Rear Compartment only. Upper section to be smooth plate panel. Includes smooth plate panels. Upper section to be set back 8" with diamond plate step with gator grip.	$2,236
3110-0176	Full Height Rear Compartment. Includes smooth plate panels. B1 to be as tall as possible (remove traffic advisor platework).	$1,084
3110-0177	Bolt-on diamond plate 12" tailboard (full width of body). Includes (2) squared off beavertails (no stanchions) with removable outer panels and (2) vertically mounted handrails on trailing edge of body.	$697
3110-0178	Full height rear compartment. Includes smooth plate panels. Bolt-on diamond plate tailboard (full width of rear compartment). Includes the driver side rescue style enhanced extended side compartment frame work with diamond plate compartment tops, officer side pumper style enhanced extended side compartment frame work with diamond plate compartment top. Officer side lower rear compartment will be transverse with B1. Handrail included and located: (1) driver upper hosebed mounted handrail (as applicable) and handrails- (2) vertically on trailing edge of body and horizontally mounted handrail(s) below hosebed.	$2,562
3110-0179	Upper Storage Compartment to hold (1) 24' 2-section ladder, (1) 14' roof ladder, (1) 12' pike pole, (1) 8' pike pole, (2) 6' pike poles and (2) 6' D-handle trash hooks. Area rearward of pike poles to be closed off just before fill towers.	$681
3110-0180	Bolt-on diamond plate 14" tailboard (full width of body). For use with rear ladder application. Includes handrails- (1) vertically on trailing edge of body opposite side of ladder and handrail(s) horizontally below hosebed.	$957
3110-0181	Rear flip down tailboard. Includes indicator in cab when the tailboard is in the down position. Includes handrails- (2) vertically on trailing edge of body and horizontally mounted handrail(s) below hosebed.	$3,358
3110-0182	Full Height Rear Compartment with Upper Storage Compartment. Includes diamond plate panels. Includes area for misc. storage and a drop down storage access door with a D-ring latch (wire to door ajar).	$1,888
3110-0183	Full height rear compartment with upper ladder storage compartment. Includes smooth plate panels. Includes area for storage of (1) 24',(1)14',(1)10' attic, (2) pike poles and a drop down storage access door with push button latches (wire to door ajar).note door to open up past 90 degrees.	$1,888
3110-0184	(2) bolt-on compartments. Locate (1) each side of B1 - driver side to have 13" wide opening and officer side to have 16" wide opening. Each compartment includes a hinged smooth plate door (with 4" gap at top for connecting of hose stored in compartment) with D-Ring latch (wired into door ajar indicator), removable slat flooring and Gator Grip compartment top. Lower hosebed access step (one each side) to be mounted to inboard side of compartment.	$1,703
3110-0185	Upper and Lower Rear Compartment. Includes smooth plate panels. Upper compartment to be as tall as possible (remove traffic advisor platework).	$1,676
3110-0186	Full Height Rear Compartment with Officer Side Storage Tunnel. Includes smooth plate panels and storage access door with push button latch. Area just below hosebed for discharge pipe routing above the rear compartment. Includes stepped upper horizontal tube to reduce hosebed height from ground over tank area.	$2,233
3110-0188	Bolt-on diamond plate 10" tailboard (full width of body). For use with rear ladder application. Includes a handrail vertically mounted on trailing edge of body opposite side of ladder.	$832
3110-0189	Full Height Rear Compartment with Officer Side Storage Tunnel. Includes smooth plate panels and storage access door with push button latch (remove traffic advisor platework).	$1,028
3110-0190	Lower rear stainless steel short compartment B1, 46" x 35" high x 26" deep. Includes intermediate step above. Side walls removed to allow a Little Giant ladder to be slid in from compartment R3. Provide a stainless steel bolt-on panel to conceal and protect ladder when stored.	$1,183
3110-0191	Bolt-on diamond plate 14" tailboard between rear side compartments with Bustin Tread. Includes hand rails (2) vertically on trailing edge of body and horizontally mounted hand rail below hose bed.	$984
3110-0193	Full Height Rear Compartment with Driver Side Storage Tunnel. Includes smooth plate panels and storage access door with push button latch.	$1,418
3110-0194	Full Height Rear Compartment with smooth plate panels. The B1 compartment to be 40" wide, full depth (no compartment break) and as tall as possible (remove traffic advisor platework).	$1,418
3110-0195	Full Height Rear Compartment. Includes smooth plate panels. The rear compartment to be 36" due to the enhanced extended compartment and double door options.	$1,023
3110-0196	Rear end assembly with dual dry chemical access doors. The upper access areas to either side of the center section to provide access to the dry chemical vessel and the nitrogen bottle(s) to include (2) dividers.	$1,720
3110-0198	B1 floor to be recessed as applicable to allow for booster reel to be located below newton dump without interference.	$450
3110-0199	Compartment B1, 24" wide x 10" high x 26" deep, located between full length chassis frame rails. The compartment shall include a bottom hinged drop-down access door using a D-ring latch (wire to door ajar).	$867

3110-0200	Full Height Rear Compartment with Driver and Officer Side Storage Tunnels. Includes smooth plate panels and storage access doors with d-ring latches.	$1,160
3110-0201	Bolt-on diamond plate tailboard (full width of rear compartment). Additional 10" of tailboard to run full width of body ("T" shaped tailboard). Includes the enhanced extended side compartment frame work and (1) handrail vertically on trailing edge of driver's side of body and horizontally mounted handrail (driver's side) below hosebed.	$2,080
3110-0202	Upper and Lower Rear Compartment. Includes upper and lower sanded smooth plate panels. Upper rear compartment door to be offset to driver side constructed of smooth plate. Upper rear compartment to be 56" wide for little giant ladder storage. (2) 1.5" x 4" extrusions to be stacked between upper and lower compartments for directional light mounted under intermediate rear step.	$2,048
3110-0203	Bolt-on diamond plate tailboard (full width of rear compartment). Includes the enhanced extended side compartment frame work with diamond plate compartment tops raised 12" to cover rear piping, (1) officer side lower area folding step. Driver side includes (1) upper hosebed mounted handrail (as applicable) and handrails- (2) vertically on trailing edge of body and horizontally mounted handrail(s) below hosebed.	$1,064
3110-0204	Lower rear stainless steel tall compartment B1, 46" wide x 50" high x 26" deep. Includes bolt-on intermediate step above. Entire rear panel to be smooth aluminum plate for Chevron graphics.	$1,179
3110-0206	Full Height Rear (no compartment). Includes opening for access to rear mount pump panel and smooth plate panels. Includes openings for preconncts to driver's side of rear pump panel	$1,314
3110-0207	Lower rear stainless steel short compartment B1, 46" wide x 35" high x 26" deep, without an intermediate rear step. Entire rear panel to be smooth aluminum plate for Chevron graphics.	$764
3110-0208	Bolt-on diamond plate 10" tailboard (full width of body). For use with a folding step application. Includes handrails- (2) vertically on trailing edge of body and handrail(s) horizontally below hosebed.	$639
3110-0209	Upper and Lower Rear Compartment. Includes smooth plate panels. B1 to be 36" wide due to enhanced extended feature and hinged door(s) as required.	$2,211
3110-0210	Bolt-on diamond plate 10" tailboard (full width of body). For use with folding step application. Includes handrails- (1) vertically on trailing edge of body opposite each side of body and handrail(s) horizontally below hosebed.	$832
3110-0211	Bolt-on diamond plate tailboard (full width of rear compartment). Includes the enhanced extended side compartment frame work with diamond plate compartment tops, (2) recessed folding steps in lower area (1) officer side, (1) driver side. Driver side includes (1) upper hosebed mounted handrail (as applicable) and handrails- (2) vertically on trailing edge of body and horizontally mounted handrail(s) below hosebed.	$997
3110-0212	Bolt-on diamond plate tailboard (full width of rear compartment). Additional 10" of tailboard to run full width of body ("T" shaped tailboard). Includes the extended side compartment frame work and handrails- (2) vertically on trailing edge of body and horizontally mounted handrail(s) below hosebed.	$2,080
3110-0215	Upper Storage Compartment to hold (1) 10' attic ladder, (4) pike poles, and (2) 6" x 10' hard suction hoses. Includes stop bracket included approximately 130" back from opening. An enclosed frontal area shall be included as part of the tunnel design.	$531
3110-0216	Bolt-on diamond plate 12" tailboard (full width of body). Includes (2) squared off beavertails with stanchions and removable outer panels and handrails- (2) vertically on trailing edge of body and horizontally mounted handrail(s) below hosebed.	$697
3110-0217	(1) Officer side rear pump module roof top compartment. Includes hinged raised aluminum smooth plate with black Scorpion coating (IPOS diamond plate) compartment lid with turn latches and grab handle(s). Compartment to have (1) bracket mounted LED light and wired to door ajar indicator in cab. Outboard side of body to run full width and wrap around the rear and meet with the end of the hosebed end.	$1,468
3110-0218	(1) Driver side rear pump module roof top compartment. Includes hinged raised smooth plate with black Scorpion coating (IPOS diamond plate) compartment lid with turn latches and grab handle(s). Compartment to have (1) bracket mounted LED light and wired to door ajar indicator in cab. Outboard side of body to run full width and wrap around the rear and meet with the end of the hosebed end.	$1,468
3110-0220	Bolt-on 10" tailboard (full width of body) aluminum smooth plate with black Scorpion coating (IPOS diamond plate). For use with rear ladder application. Includes handrails- (1) vertically on trailing edge of body opposite side of ladder and handrail(s) horizontally below hosebed.	$1,092
3110-0221	Full height rear compartment with upper storage compartment. Includes smooth plate panels. Includes area for misc. storage and a lift up storage access door with push button latches (wire to door ajar).	$2,032
3110-0222	Bolt-on 10" diamond plate tailboard (full width of rear compartment). Includes the enhanced extended side compartment frame work. For use with rear ladder application. Includes handrails (1) vertically mounted on trailing edge of body opposite side of ladder and horizontally mounted handrail(s) below hosebed.	$1,821
3110-0223	Full Height Rear Compartment with Officer Side Storage Tunnel. Includes smooth plate panels and storage access door with d-ring latch.	$1,028
3110-0224	Rear body panels to be upgraded from smooth aluminum plate to unpainted smooth FRP.	$246

3110-0225	Full Height Rear Compartment with Upper Ladder Storage Compartment. Includes smooth plate panels. Includes area for storage of (1) 24', (1) 14', (1) 10' Attic, (2) pike poles and a lift up storage access door with push button latches (wire to door ajar). The door shall be held in place with a plunger style hold open device.	$1,888
3110-0226	Bolt-on diamond plate 22" tailboard between rear side compartments with Bustin Tread. Includes hand rails (2) vertically on trailing edge of body and horizontally mounted hand rail below hose bed.	$984
3110-0227	Upper and lower rear compartment. Includes smooth plate panels. For use with raised lower rear body (B1 is 25" high).	$1,576
3110-0228	Bolt-on diamond plate 12" tailboard (full width of body). Includes (2) squared off beavertails (no stanchions) with removable outer panels and handrails- (2) vertically on trailing edge of body and horizontally mounted handrail(s) below hosebed. Beavertails and outer panels to be smooth plate painted job color. Tailboard to diamond plate painted black durabak.	$1,719
3110-0229	Lower rear stainless steel tall compartment B1, 46" wide x approx. 64" high x 26" deep, but door opening remains in the normal 45" high position. Includes bolt-on intermediate step above the door opening. Entire rear panel to be smooth plate for Chevron graphics.	$1,225
3110-0230	Bolt-on 10" tailboard (full width of body) aluminum smooth plate with black Scorpion coating (rough finish) IPOS diamond plate. For use with rear ladder application. Includes handrails- (1) vertically on trailing edge of body opposite side of ladder and handrail(s) horizontally below hosebed.	$1,092
3110-0232	Bolt-on diamond plate 22 inch tailboard tailboard (full width of body). Includes (2) squared off beavertails (no stanchions) with removable outer panels and handrails- (2) vertically on trailing edge of body and horizontally mounted handrail(s) below hosebed.	$1,089
3110-0233	Bolt-on tailboard compartments located to the driver and officer side of B-1. The bolt-on tailboard compartments to be full height just below hosebed. Doors to be (1) Piece full height as applicable and hinged to the outside with push-button latches. Install shelf tracking in each compartment full height	$3,157
3110-0234	Upper Storage Compartment to hold (1) stokes basket in place of standard ladder components. Stokes basket to be located on officer side of storage tunnel. Stop bracket full width across tunnel shall be included.	$149
3110-0235	Step full width rear intermediate. Intermediate rear step to be located just below the upper ladder storage compartment.	$720
3110-0236	Step full width rear intermediate. Intermediate rear step to be located just above the upper ladder storage compartment.	$720
3110-0237	Full height rear compartment with upper storage compartment. Includes smooth plate panels. Includes an area for misc. storage and a lift up storage access door with a D-ring latch (wire to door ajar) and a plunger style hold open device. To include a storage sleeve for (2) backboards (72"X16"X2" each) offset to the officer side with a stop at 80".	$2,173
3110-0238	Bolt-on diamond plate 18" tailboard (full width of body). For use with rear ladder application. Includes handrails- (1) vertically on trailing edge of body opposite side of ladder and handrail(s) horizontally below hosebed.	$1,586
3110-0239	Bolt-on diamond plate 10" tailboard (full width of body). Includes handrail - (1) vertically on officer side trailing edge of body and horizontally mounted handrail(s) below hosebed.	$929
3110-0240	Lower Rear Compartment with access door above to the ladders storage thru tank. Includes smooth plate panels and storage access door with push button latches.	$1,537
3110-0242	Bolt-on diamond plate 25" tailboard between rear side compartments with Bustin Tread. Includes hand rails (2) vertically on trailing edge of body and horizontally mounted hand rail below hose bed.	$984
3120-0000	Officer half side body with 24" wide forward and 36" wide rearward compartmentation. Includes adjustable ladder tracks.	$3,844
3120-0001	Officer half side body with 24" wide forward and 50" wide rearward extended compartmentation. Includes adjustable ladder tracks.	$4,381
3120-0003	Officer half side body with 30" wide forward and 36" wide rearward compartmentation. Includes adjustable ladder tracks.	$4,113
3120-0004	Officer half side body with 36" wide forward and 36" wide rearward compartmentation. Includes adjustable ladder tracks.	$4,402
3120-0005	Officer half side body with 42" wide forward and 42" wide rearward compartmentation. Includes adjustable ladder tracks.	$4,708
3120-0006	Officer half side body with 48" wide forward and 48" wide rearward compartmentation. Includes adjustable ladder tracks.	$5,038
3120-0007	Officer half side body with 30" wide forward and 50" wide rearward extended compartmentation. Includes adjustable ladder tracks.	$4,650
3120-0008	Officer half side body with 36" wide forward and 50" wide rearward extended compartmentation. Includes adjustable ladder tracks.	$4,938
3120-0009	Officer half side body with 42" wide forward and 56" wide rearward extended compartmentation. Includes adjustable ladder tracks.	$5,247
3120-0010	Officer half side body with 48" wide forward and 62" wide rearward extended compartmentation. Includes adjustable ladder tracks.	$5,576

3120-0011	Officer half side body with 24" wide forward and 50" wide rearward enhanced extended compartmentation. Includes adjustable ladder tracks.	$4,629
3120-0012	Officer half side body with 30" wide forward and 50" wide rearward enhanced extended compartmentation. Includes adjustable ladder tracks.	$4,896
3120-0013	Officer half side body with 36" wide forward and 50" wide rearward enhanced extended compartmentation. Includes adjustable ladder tracks.	$5,183
3120-0014	Officer half side body with 42" wide forward and 56" wide rearward enhanced extended compartmentation. Includes adjustable ladder tracks.	$5,492
3120-0015	Officer half side body with 48" wide forward and 62" wide rearward enhanced extended compartmentation. Includes adjustable ladder tracks.	$5,821
3120-0016	Officer 3/4 side body with upper and lower compartmentation. Includes 24" wide forward and 36" wide rearward lower compartments and (3) opening upper compartments.	$5,188
3120-0017	Officer 3/4 side body with full height 24" wide forward and 36" wide rearward compartmentation. Includes (1) 56" wide compartment over the wheel well.	$4,804
3120-0018	Officer 3/4 side body with upper and lower compartmentation. Includes 30" wide forward and 36" wide rearward lower compartments and (3) opening upper compartments.	$5,523
3120-0019	Officer 3/4 side body with upper and lower compartmentation. Includes 36" wide forward and 36" wide rearward lower compartments and (3) opening upper compartments.	$5,883
3120-0020	Officer 3/4 side body with upper and lower compartmentation. Includes 42" wide forward and 42" wide rearward lower compartments and (3) opening upper compartments.	$6,269
3120-0021	Officer 3/4 side body with upper and lower compartmentation. Includes 48" wide forward and 48" wide rearward lower compartments and (3) opening upper compartments.	$6,681
3120-0022	Officer 3/4 side body with full height 30" wide forward and 36" wide rearward compartmentation. Includes (1) 56" wide compartment over the wheel well.	$5,141
3120-0023	Officer 3/4 side body with full height 36" wide forward and 36" wide rearward compartmentation. Includes (1) 56" wide compartment over the wheel well.	$5,499
3120-0024	Officer 3/4 side body with full height 42" wide forward and 42" wide rearward compartmentation. Includes (1) 56" wide compartment over the wheel well.	$5,884
3120-0025	Officer 3/4 side body with full height 48" wide forward and 48" wide rearward compartmentation. Includes (1) 56" wide compartment over the wheel well.	$6,297
3120-0026	Officer 3/4 side body with 24" wide forward and 50" wide rearward extended compartmentation. Includes (1) 56" wide compartment over the wheel well.	$5,342
3120-0027	Officer 3/4 side body with 30" wide forward and 50" wide rearward extended compartmentation. Includes (1) 56" wide compartment over the wheel well.	$5,678
3120-0028	Officer 3/4 side body with 36" wide forward and 50" wide rearward extended compartmentation. Includes (1) 56" wide compartment over the wheel well.	$6,039
3120-0029	Officer 3/4 side body with 42" wide forward and 56" wide rearward extended compartmentation. Includes (1) 56" wide compartment over the wheel well.	$6,422
3120-0030	Officer 3/4 side body with 48" wide forward and 62" wide rearward extended compartmentation. Includes (1) 56" wide compartment over the wheel well.	$6,835
3120-0031	Officer 3/4 side body with 24" wide forward and 50" wide rearward enhanced extended compartmentation. Includes (1) 56" wide compartment over the wheel well.	$5,588
3120-0032	Officer 3/4 side body with 30" wide forward and 50" wide rearward enhanced extended compartmentation. Includes (1) 56" wide compartment over the wheel well.	$5,923
3120-0033	Officer 3/4 side body with 36" wide forward and 50" wide rearward enhanced extended compartmentation. Includes (1) 56" wide compartment over the wheel well.	$6,282
3120-0034	Officer 3/4 side body with 42" wide forward and 50" wide rearward enhanced extended compartmentation. Includes (1) 56" wide compartment over the wheel well.	$6,668
3120-0035	Officer 3/4 side body with 48" wide forward and 62" wide rearward enhanced extended compartmentation. Includes (1) 56" wide compartment over the wheel well.	$7,080
3120-0036	Officer side body with full height 24" wide forward and 36" wide rearward compartmentation. Includes (1) 33" wide compartment (forward) over the wheel well and (1) Zico Overhead Ladder Rack.	$13,293
3120-0037	Officer side body with full height 30" wide forward and 36" wide rearward compartmentation. Includes (1) 33" wide compartment (forward) over the wheel well and (1) Zico Overhead Ladder Rack.	$13,831
3120-0038	Officer side body with full height 36" wide forward and 36" wide rearward compartmentation. Includes (1) 33" wide compartment (forward) over the wheel well and (1) Zico Overhead Ladder Rack.	$14,406
3120-0039	Officer side body with full height 42" wide forward and 42" wide rearward compartmentation. Includes (1) 33" wide compartment (forward) over the wheel well and (1) Zico Overhead Ladder Rack.	$15,022
3120-0040	Officer side body with full height 48" wide forward and 48" wide rearward compartmentation. Includes (1) 33" wide compartment (forward) over the wheel well and (1) Zico Overhead Ladder Rack.	$15,679
3120-0041	Officer side body with full height 24" wide forward and 50" wide rearward extended compartmentation. Includes (1) 33" wide compartment (forward) over the wheel well and (1) Zico Overhead Ladder Rack.	$13,831
3120-0042	Officer side body with full height 30" wide forward and 50" wide rearward extended compartmentation. Includes (1) 33" wide compartment (forward) over the wheel well and (1) Zico Overhead Ladder Rack.	$14,369

3120-0043	Officer side body with full height 36" wide forward and 50" wide rearward extended compartmentation. Includes (1) 33" wide compartment (forward) over the wheel well and (1) Zico Overhead Ladder Rack.	$14,944
3120-0044	Officer side body with full height 42" wide forward and 56" wide rearward extended compartmentation. Includes (1) 33" wide compartment (forward) over the wheel well and (1) Zico Overhead Ladder Rack.	$15,560
3120-0045	Officer side body with full height 48" wide forward and 62" wide rearward extended compartmentation. Includes (1) 33" wide compartment (forward) over the wheel well and (1) Zico Overhead Ladder Rack.	$16,218
3120-0046	Officer side body with full height 24" wide forward and 50" wide rearward enhanced extended compartmentation. Includes (1) 33" wide compartment (forward) over the wheel well and (1) Zico Overhead Ladder Rack.	$14,078
3120-0047	Officer side body with full height 30" wide forward and 50" wide rearward enhanced extended compartmentation. Includes (1) 33" wide compartment (forward) over the wheel well and (1) Zico Overhead Ladder Rack.	$14,615
3120-0048	Officer side body with full height 36" wide forward and 50" wide rearward enhanced extended compartmentation. Includes (1) 33" wide compartment (forward) over the wheel well and (1) Zico Overhead Ladder Rack.	$15,189
3120-0049	Officer side body with full height 42" wide forward and 56" wide rearward enhanced extended compartmentation. Includes (1) 33" wide compartment (forward) over the wheel well and (1) Zico Overhead Ladder Rack.	$15,805
3120-0050	Officer side body with full height 48" wide forward and 62" wide rearward enhanced extended compartmentation. Includes (1) 33" wide compartment (forward) over the wheel well and (1) Zico Overhead Ladder Rack.	$16,463
3120-0051	Officer half side body with 36" wide forward and 36" wide rearward compartmentation. Includes adjustable ladder tracks and 30 degree angle of departure.	$4,410
3120-0052	Officer 3/4 side body with full height 24" wide forward and 36" wide rearward compartmentation. Includes (1) 56" wide compartment over the wheel well and 30 degree angle of departure.	$8,264
3120-0053	Officer 3/4 side body with full height 30" wide forward and 36" wide rearward compartmentation. Includes (1) 56" wide compartment over the wheel well and 30 degree angle of departure.	$8,526
3120-0054	Officer 3/4 side body with full height 36" wide forward and 36" wide rearward compartmentation. Includes (1) 56" wide compartment over the wheel well and 30 degree angle of departure.	$8,788
3120-0055	Officer side body with full height 24" wide forward and 36" wide rearward compartmentation. Includes (1) 33" wide compartment (forward) over the wheel well, (1) Zico Overhead Ladder Rack and 30 degree angle of departure.	$15,014
3120-0056	Officer side body with full height 30" wide forward and 36" wide rearward compartmentation. Includes (1) 33" wide compartment (forward) over the wheel well, (1) Zico Overhead Ladder Rack and 30 degree angle of departure.	$15,276
3120-0057	Officer side body with full height 36" wide forward and 36" wide rearward compartmentation. Includes (1) 33" wide compartment (forward) over the wheel well, (1) Zico Overhead Ladder Rack and 30 degree angle of departure.	$15,538
3120-0058	Stainless steel officer half side body with 48" wide forward and 48" wide rearward compartmentation (interior). Includes adjustable ladder tracks.	$5,540
3120-0059	Stainless steel officer half side body with 48" wide forward and 60" wide rearward compartmentation (interior). Includes adjustable ladder tracks.	$5,819
3120-0060	Stainless steel officer half side body with 60" wide forward and 60" wide rearward compartmentation (interior). Includes adjustable ladder tracks.	$5,930
3120-0061	Stainless steel officer 3/4 side body with full height 36" wide forward and 48" wide rearward compartmentation (interior). Includes (1) 60" wide compartment over the wheel well.	$6,050
3120-0062	Stainless steel officer 3/4 side body with full height 48" wide forward and 48" wide rearward compartmentation (interior). Includes (1) 60" wide compartment over the wheel well.	$6,925
3120-0063	Stainless steel officer 3/4 side body with full height 48" wide forward and 60" wide rearward compartmentation (interior). Includes (1) 60" wide compartment over the wheel well.	$7,273
3120-0064	Stainless steel officer 3/4 side body with full height 60" wide forward and 60" wide rearward compartmentation (interior). Includes (1) 60" wide compartment over the wheel well.	$7,409
3120-0065	Stainless steel officer side body with full height 36" wide forward and 48" wide rearward compartmentation (interior). Includes (1) 45" wide compartment (rearward) over the wheel well and (1) Zico Overhead Ladder Rack.	$15,847
3120-0066	Stainless steel officer side body with full height 48" wide forward and 48" wide rearward compartmentation (interior). Includes (1) 45" wide compartment (rearward) over the wheel well and (1) Zico Overhead Ladder Rack.	$17,247
3120-0067	Stainless steel officer side body with full height 48" wide forward and 60" wide rearward compartmentation (interior). Includes (1) 45" wide compartment (rearward) over the wheel well and (1) Zico Overhead Ladder Rack.	$19,696
3120-0068	Stainless steel officer side body with full height 60" wide forward and 60" wide rearward compartmentation (interior). Includes (1) 45" wide compartment (rearward) over the wheel well and (1) Zico Overhead Ladder Rack.	$18,023

3120-0069	Stainless steel officer side body with full height 48" wide forward and 60" wide rearward compartmentation (interior). Includes (1) 60" wide compartment over the wheel well. For use with in the hosebed area ladder storage.	$11,633
3120-0070	Stainless steel officer side body with full height 60" wide forward and 60" wide rearward compartmentation (interior). Includes (1) 60" wide compartment over the wheel well. For use with in the hosebed area or thru the tank ladder storage.	$11,856
3120-0080	Officer side body with full height 36" wide forward and 36" wide rearward compartmentation. Includes (1) 33" wide compartment (forward) over the wheel well and (1) Zico Overhead Ladder Rack.	$15,414
3120-0081	Officer side body with full height 42" wide forward and 42" wide rearward compartmentation. Includes (1) 33" wide compartment (forward) over the wheel well and (1) Zico Overhead Ladder Rack.	$16,073
3120-0082	Officer side body with full height 48" wide forward and 48" wide rearward compartmentation. Includes (1) 33" wide compartment (forward) over the wheel well and (1) Zico Overhead Ladder Rack.	$16,779
3120-0083	Officer side body with full height 36" wide forward and 36" wide rearward compartmentation. Includes (1) 56" wide compartment over the wheel well and one (1)ladder storage tunnel and access door at rear.	$11,911
3120-0084	Officer side body with full height 42" wide forward and 42" wide rearward compartmentation. Includes (1) 56" wide compartment over the wheel well and one (1)ladder storage tunnel and access door at rear.	$12,569
3120-0085	Officer side body with full height 48" wide forward and 48" wide rearward compartmentation. Includes (1) 56" wide compartment over the wheel well and one (1)ladder storage tunnel and access door at rear.	$13,273
3120-0086	Officer side body with full height 42" wide forward and 42" wide rearward compartmentation. Includes (1) 56" wide compartment over the wheel well.	$10,072
3120-0087	Officer side body with full height 48" wide forward and 48" wide rearward compartmentation. Includes (1) 56" wide compartment over the wheel well. For use with thru the tank ladder storage.	$10,777
3120-0088	Officer side body with full height 60" wide forward and 42" wide rearward compartmentation. Includes (1) 33" wide compartment (forward) over the wheel well and (1) Zico Overhead Ladder Rack.	$17,533
3120-0089	Officer side body with full height 60" wide forward and 42" wide rearward compartmentation. Includes (1) 56" wide compartment over the wheel well and one (1)ladder storage tunnel and access door at rear.	$14,030
3120-0090	Officer side body with full height 60" wide forward and 42" wide rearward compartmentation. Includes (1) 56" wide compartment over the wheel well. For use with thru the tank ladder storage.	$11,532
3120-0091	Officer half side body with 36" wide rearward compartmentation. Includes adjustable ladder tracks and 30 degree angle of departure.	$2,217
3120-0092	Officer 3/4 side body with full height 36" wide rearward compartmentation. Includes (1) 56" wide compartment over the wheel well and 30 degree angle of departure.	$7,456
3120-0093	Officer half side body with 36" wide rearward compartmentation. Includes adjustable ladder tracks.	$2,373
3120-0094	Officer 3/4 side body with full height 36" wide rearward compartmentation. Includes (1) 56" wide compartment over the wheel well.	$4,377
3120-0095	Officer full height side body with upper and lower compartmentation. Includes 42" wide forward and 42" wide rearward lower compartments and (3) opening upper compartments. For use with ladder storage thru tank.	$9,799
3120-0096	Officer side body with full height 42" wide forward and 42" wide rearward compartmentation. Includes (1) 56" wide compartment over the wheel well. For use with ladder storage thru tank.	$9,415
3120-0097	Officer full height side body with upper and lower compartmentation. Includes 48" wide forward and 48" wide rearward lower compartments and (3) opening upper compartments. For use with ladder storage thru tank.	$10,457
3120-0098	Officer side body with full height 48" wide forward and 48" wide rearward compartmentation. Includes (1) 56" wide compartment over the wheel well. For use with ladder storage thru tank.	$10,072
3120-0099	Officer side body with full height 42" wide forward and 56" wide rearward extended compartmentation. Includes (1) 56" wide compartment over the wheel well.	$9,952
3120-0100	Officer side body with full height 42" wide forward and 56" wide rearward enhanced extended compartmentation. Includes (1) 56" wide compartment over the wheel well.	$10,198
3120-0101	Officer side body with full height 48" wide forward and 62" wide rearward extended compartmentation. Includes (1) 56" wide compartment over the wheel well.	$10,610
3120-0102	Officer side body with full height 48" wide forward and 62" wide rearward enhanced extended compartmentation. Includes (1) 56" wide compartment over the wheel well.	$10,856
3120-0104	Stainless steel officer 3/4 side body with full height 36" wide forward and 48" wide rearward compartmentation (interior). Includes (1) 60" wide compartment over the wheel well.	$11,116
3120-0105	Stainless steel officer 3/4 side body with full height 48" wide forward and 48" wide rearward compartmentation (interior). Includes (1) 60" wide compartment over the wheel well.	$11,679
3120-0106	Stainless steel officer 3/4 side body with full height 60" wide forward and 60" wide rearward compartmentation (interior). Includes (1) 60" wide compartment over the wheel well.	$12,801
3120-0107	Stainless steel officer 3/4 side body with full height 48" wide forward and 60" wide rearward compartmentation (interior). Includes (1) 60" wide compartment over the wheel well.	$12,238

3120-0108	Stainless steel officer side body with full height 36" wide forward and 48" wide (interior) rearward compartmentation. Includes (1) 45" wide (interior) compartment (forward) over the wheel well and (1) Zico Overhead Ladder Rack.	$16,954
3120-0109	Stainless steel officer side body with full height 48" wide forward and 48" wide (interior) rearward compartmentation. Includes (1) 45" wide (interior) compartment (forward) over the wheel well and (1) Zico Overhead Ladder Rack.	$18,455
3120-0110	Stainless steel officer side body with full height 60" wide forward and 60" wide (interior) rearward compartmentation. Includes (1) 45" wide (interior) compartment (forward) over the wheel well and (1) Zico Overhead Ladder Rack.	$19,285
3120-0111	Stainless steel officer side body with full height 48" wide forward and 60" wide (interior) rearward compartmentation. Includes (1) 45" wide (interior) compartment (forward) over the wheel well and (1) Zico Overhead Ladder Rack.	$19,009
3120-0112	Stainless steel officer side body with full height 36" wide forward and 48" wide rearward (interior) compartmentation. Includes (1) 60" wide compartment over the wheel well. For use with in the hosebed ladder storage.	$10,354
3120-0113	Stainless steel officer side body with full height 48" wide forward and 48" wide rearward (interior) compartmentation. Includes (1) 60" wide compartment over the wheel well. For use with in the hosebed ladder storage.	$11,856
3120-0114	Stainless steel officer side body with full height 48" wide forward and 60" wide rearward (interior) compartmentation. Includes (1) 60" wide compartment over the wheel well. For use with in the hosebed ladder storage.	$12,212
3120-0115	Stainless steel officer side body with full height 60" wide forward and 60" wide rearward (interior) compartmentation. Includes (1) 60" wide compartment over the wheel well. For use with in the hosebed ladder storage.	$11,856
3120-0116	Stainless steel officer side body with full height 36" wide forward and 48" wide (interior) rearward compartmentation. Includes (1) 60" wide compartment over the wheel well and one (1) ladder storage tunnel and access door at rear with push-button latch.	$13,452
3120-0117	Stainless steel officer side body with full height 48" wide forward and 48" wide (interior) rearward compartmentation. Includes (1) 60" wide compartment over the wheel well and one (1) ladder storage tunnel and access door at rear with push-button latch.	$14,952
3120-0118	Stainless steel officer side body with full height 48" wide forward and 60" wide (interior) rearward compartmentation. Includes (1) 60" wide compartment over the wheel well and one (1) ladder storage tunnel and access door at rear with push-button latch.	$15,700
3120-0119	Stainless steel officer side body with full height 60" wide forward and 60" wide (interior) rearward compartmentation. Includes (1) 60" wide compartment over the wheel well and one (1) ladder storage tunnel and access door at rear with push-button latch.	$15,781
3120-0121	Officer side body with full height 36" wide forward and 36" wide rearward compartmentation. Includes (1) 56" wide compartment over the wheel well.	$9,367
3120-0123	Officer half side body with 60" wide forward and 42" wide rearward compartmentation. Includes adjustable ladder tracks.	$5,390
3120-0124	Officer 3/4 side body with full height 60" wide forward and 42" wide rearward compartmentation. Includes (1) 56" wide compartment over the wheel well.	$6,737
3120-0125	Officer 3/4 side body with upper and lower compartmentation. Includes 60" wide forward and 42" wide rearward lower compartments and (3) opening upper compartments.	$7,148
3120-0126	Officer side body with full height 60" wide forward and 42" wide rearward compartmentation. Includes (1) 56" wide compartment over the wheel well. For use with ladder storage thru tank.	$10,777
3120-0127	Officer full height side body with upper and lower compartmentation. Includes 60" wide forward and 42" wide rearward lower compartments and (3) opening upper compartments. For use with ladder storage thru tank.	$11,188
3120-0128	Officer side body with full height 60" wide forward and 42" wide rearward compartmentation. Includes (1) 33" wide compartment (forward) over the wheel well and (1) Zico Overhead Ladder Rack.	$16,073
3120-0131	Stainless steel officer side body with full height 24" wide forward and 48" wide (interior) rearward compartmentation. Includes (1) 60" wide compartment over the wheel well and one (1) ladder storage tunnel and access door at rear with push-button latch.	$11,951
3120-0132	Officer side body with full height 30" wide forward and 50" wide rearward extended compartmentation. Includes (1) 56" wide compartment over the wheel well and (1) 2-Arm Ladder Rack. The ladder rack is to be painted job color and includes amber lights on each end to visually indicate when the rack is in motion.	$25,589
3120-0134	Officer side body with full height 30" wide forward and 36" wide rearward compartmentation. Includes (1) 56" wide compartment over the wheel well. For use with over the hosebed storage rack.	$8,223
3120-0135	Officer side body with full height 36" wide forward and 36" wide rearward compartmentation. Includes (1) 56" wide compartment over the wheel well. For use with over the hosebed storage rack.	$8,809
3120-0137	Officer 3/4 side body with full height 50" wide enhanced extended rearward compartmentation. Includes (1) 56" wide compartment over the wheel well.	$5,161
3120-0138	Officer 3/4 side body with upper and lower compartmentation. Includes 24" wide forward and 36" wide rearward lower compartments and (3) opening upper compartments.	$5,188

3120-0139	Officer 3/4 side body with full height 24" wide forward and 36" wide rearward compartmentation. Includes (1) 56" wide compartment over the wheel well.	$4,804
3120-0140	Officer 3/4 side body with upper and lower compartmentation. Includes 30" wide forward and 36" wide rearward lower compartments and (3) opening upper compartments.	$5,523
3120-0141	Officer 3/4 side body with upper and lower compartmentation. Includes 36" wide forward and 36" wide rearward lower compartments and (3) opening upper compartments.	$5,883
3120-0142	Officer 3/4 side body with upper and lower compartmentation. Includes 42" wide forward and 42" wide rearward lower compartments and (3) opening upper compartments.	$6,269
3120-0143	Officer 3/4 side body with upper and lower compartmentation. Includes 48" wide forward and 48" wide rearward lower compartments and (3) opening upper compartments.	$6,681
3120-0144	Officer 3/4 side body with full height 30" wide forward and 36" wide rearward compartmentation. Includes (1) 56" wide compartment over the wheel well.	$5,141
3120-0145	Officer 3/4 side body with full height 36" wide forward and 36" wide rearward compartmentation. Includes (1) 56" wide compartment over the wheel well.	$5,499
3120-0146	Officer 3/4 side body with full height 42" wide forward and 42" wide rearward compartmentation. Includes (1) 56" wide compartment over the wheel well.	$5,884
3120-0147	Officer 3/4 side body with full height 48" wide forward and 48" wide rearward compartmentation. Includes (1) 56" wide compartment over the wheel well.	$6,297
3120-0148	Officer 3/4 side body with 24" wide forward and 50" wide rearward extended compartmentation. Includes (1) 56" wide compartment over the wheel well.	$5,342
3120-0149	Officer 3/4 side body with 30" wide forward and 50" wide rearward extended compartmentation. Includes (1) 56" wide compartment over the wheel well.	$5,678
3120-0150	Officer 3/4 side body with 36" wide forward and 50" wide rearward extended compartmentation. Includes (1) 56" wide compartment over the wheel well.	$6,039
3120-0151	Officer 3/4 side body with 42" wide forward and 56" wide rearward extended compartmentation. Includes (1) 56" wide compartment over the wheel well.	$6,422
3120-0152	Officer 3/4 side body with 48" wide forward and 62" wide rearward extended compartmentation. Includes (1) 56" wide compartment over the wheel well.	$6,835
3120-0153	Officer 3/4 side body with 24" wide forward and 50" wide rearward enhanced extended compartmentation. Includes (1) 56" wide compartment over the wheel well.	$5,588
3120-0154	Officer 3/4 side body with 30" wide forward and 50" wide rearward enhanced extended compartmentation. Includes (1) 56" wide compartment over the wheel well.	$5,923
3120-0155	Officer 3/4 side body with 36" wide forward and 50" wide rearward enhanced extended compartmentation. Includes (1) 56" wide compartment over the wheel well.	$6,282
3120-0156	Officer 3/4 side body with 42" wide forward and 56" wide rearward enhanced extended compartmentation. Includes (1) 56" wide compartment over the wheel well.	$6,668
3120-0157	Officer 3/4 side body with 48" wide forward and 62" wide rearward enhanced extended compartmentation. Includes (1) 56" wide compartment over the wheel well.	$7,080
3120-0158	Officer side body with full height 24" wide forward and 36" wide rearward compartmentation. Includes (1) 33" wide compartment over the wheel well and (1) Zico Overhead Ladder Rack.	$13,293
3120-0159	Officer side body with full height 30" wide forward and 36" wide rearward compartmentation. Includes (1) 33" wide compartment over the wheel well and (1) Zico Overhead Ladder Rack.	$13,831
3120-0160	Officer side body with full height 36" wide forward and 36" wide rearward compartmentation. Includes (1) 33" wide compartment over the wheel well and (1) Zico Overhead Ladder Rack.	$14,406
3120-0161	Officer side body with full height 42" wide forward and 42" wide rearward compartmentation. Includes (1) 33" wide compartment over the wheel well and (1) Zico Overhead Ladder Rack.	$15,022
3120-0162	Officer side body with full height 48" wide forward and 48" wide rearward compartmentation. Includes (1) 33" wide compartment over the wheel well and (1) Zico Overhead Ladder Rack.	$15,679
3120-0163	Officer side body with full height 24" wide forward and 50" wide rearward extended compartmentation. Includes (1) 33" wide compartment over the wheel well and (1) Zico Overhead Ladder Rack.	$13,831
3120-0164	Officer side body with full height 30" wide forward and 50" wide rearward extended compartmentation. Includes (1) 33" wide compartment over the wheel well and (1) Zico Overhead Ladder Rack.	$14,369
3120-0165	Officer side body with full height 36" wide forward and 50" wide rearward extended compartmentation. Includes (1) 33" wide compartment over the wheel well and (1) Zico Overhead Ladder Rack.	$14,944
3120-0166	Officer side body with full height 42" wide forward and 56" wide rearward extended compartmentation. Includes (1) 33" wide compartment over the wheel well and (1) Zico Overhead Ladder Rack.	$15,560
3120-0167	Officer side body with full height 48" wide forward and 62" wide rearward extended compartmentation. Includes (1) 33" wide compartment over the wheel well and (1) Zico Overhead Ladder Rack.	$16,218
3120-0168	Officer side body with full height 24" wide forward and 50" wide rearward enhanced extended compartmentation. Includes (1) 33" wide compartment over the wheel well and (1) Zico Overhead Ladder Rack.	$14,078

3120-0169	Officer side body with full height 30" wide forward and 50" wide rearward enhanced extended compartmentation. Includes (1) 33" wide compartment over the wheel well and (1) Zico Overhead Ladder Rack.	$14,615
3120-0170	Officer side body with full height 36" wide forward and 50" wide rearward enhanced extended compartmentation. Includes (1) 33" wide compartment over the wheel well and (1) Zico Overhead Ladder Rack.	$15,189
3120-0171	Officer side body with full height 42" wide forward and 56" wide rearward enhanced extended compartmentation. Includes (1) 33" wide compartment over the wheel well and (1) Zico Overhead Ladder Rack.	$15,805
3120-0172	Officer side body with full height 48" wide forward and 62" wide rearward enhanced extended compartmentation. Includes (1) 33" wide compartment over the wheel well and (1) Zico Overhead Ladder Rack.	$16,463
3120-0173	Officer 3/4 side body with full height 24" wide forward and 36" wide rearward compartmentation. Includes (1) 56" wide compartment over the wheel well and 30 degree angle of departure.	$8,264
3120-0174	Officer 3/4 side body with full height 30" wide forward and 36" wide rearward compartmentation. Includes (1) 56" wide compartment over the wheel well and 30 degree angle of departure.	$8,526
3120-0175	Officer 3/4 side body with full height 36" wide forward and 36" wide rearward compartmentation. Includes (1) 56" wide compartment over the wheel well and 30 degree angle of departure.	$8,788
3120-0176	Officer side body with full height 24" wide forward and 36" wide rearward compartmentation. Includes (1) 33" wide compartment over the wheel well, and (1) Zico Overhead Ladder Rack. Rear bottom corner of truck will be angled 30 degrees for a greater rear angle of departure.	$15,014
3120-0177	Officer side body with full height 30" wide forward and 36" wide rearward compartmentation. Includes (1) 33" wide compartment over the wheel well, (1) Zico Overhead Ladder Rack and 30 degree angle of departure.	$15,276
3120-0178	Officer side body with full height 36" wide forward and 36" wide rearward compartmentation. Includes (1) 33" wide compartment over the wheel well, (1) Zico Overhead Ladder Rack and 30 degree angle of departure.	$15,538
3120-0179	Stainless steel officer 3/4 side body with full height 36" wide forward and 48" wide rearward compartmentation (interior). Includes (1) 60" wide compartment over the wheel well.	$6,050
3120-0180	Stainless steel officer 3/4 side body with full height 48" wide forward and 48" wide rearward compartmentation (interior). Includes (1) 60" wide compartment over the wheel well.	$6,925
3120-0181	Stainless steel officer 3/4 side body with full height 48" wide forward and 60" wide rearward compartmentation (interior). Includes (1) 60" wide compartment over the wheel well.	$7,273
3120-0182	Stainless steel officer 3/4 side body with full height 60" wide forward and 60" wide rearward compartmentation (interior). Includes (1) 60" wide compartment over the wheel well.	$7,409
3120-0183	Stainless steel officer side body with full height 36" wide forward and 48" wide rearward compartmentation (interior). Includes (1) 45" wide compartment over the wheel well and (1) Zico Overhead Ladder Rack.	$15,847
3120-0184	Stainless steel officer side body with full height 48" wide forward and 48" wide rearward compartmentation (interior). Includes (1) 45" wide compartment over the wheel well and (1) Zico Overhead Ladder Rack.	$17,247
3120-0185	Stainless steel officer side body with full height 48" wide forward and 60" wide rearward compartmentation (interior). Includes (1) 45" wide compartment over the wheel well and (1) Zico Overhead Ladder Rack.	$19,696
3120-0186	Stainless steel officer side body with full height 60" wide forward and 60" wide rearward compartmentation (interior). Includes (1) 45" wide compartment over the wheel well and (1) Zico Overhead Ladder Rack.	$18,023
3120-0187	Stainless steel officer side body with full height 48" wide forward and 60" wide rearward compartmentation (interior). Includes (1) 60" wide compartment over the wheel well. For use with in the hosebed area ladder storage.	$11,633
3120-0188	Stainless steel officer side body with full height 60" wide forward and 60" wide rearward compartmentation (interior). Includes (1) 60" wide compartment over the wheel well. For use with in the hosebed area or thru the tank ladder storage.	$11,856
3120-0189	Officer side body with full height 36" wide forward and 36" wide rearward compartmentation. Includes (1) 33" wide compartment over the wheel well and (1) Zico Overhead Ladder Rack.	$15,414
3120-0190	Officer side body with full height 42" wide forward and 42" wide rearward compartmentation. Includes (1) 33" wide compartment over the wheel well and (1) Zico Overhead Ladder Rack.	$16,073
3120-0191	Officer side body with full height 48" wide forward and 48" wide rearward compartmentation. Includes (1) 33" wide compartment over the wheel well and (1) Zico Overhead Ladder Rack.	$16,779
3120-0192	Officer side body with full height 36" wide forward and 36" wide rearward compartmentation. Includes (1) 56" wide compartment over the wheel well and one (1) storage tunnel.	$11,911
3120-0193	Officer side body with full height 42" wide forward and 42" wide rearward compartmentation. Includes (1) 56" wide compartment over the wheel well and one (1) storage tunnel.	$12,569
3120-0194	Officer side body with full height 48" wide forward and 48" wide rearward compartmentation. Includes (1) 56" wide compartment over the wheel well and one (1) storage tunnel.	$13,273
3120-0195	Officer side body with full height 42" wide forward and 42" wide rearward compartmentation. Includes (1) 56" wide compartment over the wheel well.	$10,072

3120-0196	Officer side body with full height 48" wide forward and 48" wide rearward compartmentation. Includes (1) 56" wide compartment over the wheel well.	$10,777
3120-0197	Officer side body with full height 60" wide forward and 42" wide rearward compartmentation. Includes (1) 33" wide compartment over the wheel well and (1) Zico Overhead Ladder Rack.	$17,533
3120-0198	Officer side body with full height 60" wide forward and 42" wide rearward compartmentation. Includes (1) 56" wide compartment over the wheel well and one (1) storage tunnel.	$14,030
3120-0199	Officer side body with full height 60" wide forward and 42" wide rearward compartmentation. Includes (1) 56" wide compartment over the wheel well.	$11,532
3120-0200	Officer 3/4 side body with full height 36" wide rearward compartmentation. Includes (1) 56" wide compartment over the wheel well and 30 degree angle of departure.	$7,456
3120-0201	Officer 3/4 side body with full height 36" wide rearward compartmentation. Includes (1) 56" wide compartment over the wheel well.	$4,377
3120-0202	Officer full height side body with upper and lower compartmentation. Includes 42" wide forward and 42" wide rearward lower compartments and (3) opening upper compartments. For use with ladder storage thru tank.	$9,799
3120-0203	Officer side body with full height 42" wide forward and 42" wide rearward compartmentation. Includes (1) 56" wide compartment over the wheel well.	$9,415
3120-0204	Officer full height side body with upper and lower compartmentation. Includes 48" wide forward and 48" wide rearward lower compartments and (3) opening upper compartments. For use with ladder storage thru tank.	$10,457
3120-0205	Officer side body with full height 48" wide forward and 48" wide rearward compartmentation. Includes (1) 56" wide compartment over the wheel well.	$10,072
3120-0206	Officer side body with full height 42" wide forward and 56" wide rearward extended compartmentation. Includes (1) 56" wide compartment over the wheel well.	$9,952
3120-0207	Officer side body with full height 42" wide forward and 56" wide rearward enhanced extended compartmentation. Includes (1) 56" wide compartment over the wheel well.	$10,198
3120-0208	Officer side body with full height 48" wide forward and 62" wide rearward extended compartmentation. Includes (1) 56" wide compartment over the wheel well.	$10,610
3120-0209	Officer side body with full height 48" wide forward and 62" wide rearward enhanced extended compartmentation. Includes (1) 56" wide compartment over the wheel well.	$10,856
3120-0210	Stainless steel officer 3/4 side body with full height 36" wide forward and 48" wide rearward compartmentation (interior). Includes (1) 60" wide compartment over the wheel well.	$11,116
3120-0211	Stainless steel officer 3/4 side body with full height 48" wide forward and 48" wide rearward compartmentation (interior). Includes (1) 60" wide compartment over the wheel well.	$11,679
3120-0212	Stainless steel officer 3/4 side body with full height 60" wide forward and 60" wide rearward compartmentation (interior). Includes (1) 60" wide compartment over the wheel well.	$12,801
3120-0213	Stainless steel officer 3/4 side body with full height 48" wide forward and 60" wide rearward compartmentation (interior). Includes (1) 60" wide compartment over the wheel well.	$12,238
3120-0214	Stainless steel officer side body with full height 36" wide forward and 48" wide (interior) rearward compartmentation. Includes (1) 45" wide (interior) compartment over the wheel well and (1) Zico Overhead Ladder Rack.	$16,954
3120-0215	Stainless steel officer side body with full height 48" wide forward and 48" wide (interior) rearward compartmentation. Includes (1) 45" wide (interior) compartment over the wheel well and (1) Zico Overhead Ladder Rack.	$18,455
3120-0216	Stainless steel officer side body with full height 60" wide forward and 60" wide (interior) rearward compartmentation. Includes (1) 45" wide (interior) compartment over the wheel well and (1) Zico Overhead Ladder Rack.	$19,285
3120-0217	Stainless steel officer side body with full height 48" wide forward and 60" wide (interior) rearward compartmentation. Includes (1) 45" wide (interior) compartment over the wheel well and (1) Zico Overhead Ladder Rack.	$19,009
3120-0218	Stainless steel officer side body with full height 36" wide forward and 48" wide rearward (interior) compartmentation. Includes (1) 60" wide compartment over the wheel well. For use with in the hosebed ladder storage.	$10,354
3120-0219	Stainless steel officer side body with full height 48" wide forward and 48" wide rearward (interior) compartmentation. Includes (1) 60" wide compartment over the wheel well. For use with in the hosebed ladder storage.	$11,856
3120-0220	Stainless steel officer side body with full height 48" wide forward and 60" wide rearward (interior) compartmentation. Includes (1) 60" wide compartment over the wheel well. For use with in the hosebed ladder storage.	$12,212
3120-0221	Stainless steel officer side body with full height 60" wide forward and 60" wide rearward (interior) compartmentation. Includes (1) 60" wide compartment over the wheel well. For use with in the hosebed ladder storage.	$11,856
3120-0222	Stainless steel officer side body with full height 36" wide forward and 48" wide (interior) rearward compartmentation. Includes (1) 60" wide compartment over the wheel well and one (1) ladder storage tunnel and access door at rear with push-button latch.	$13,452
3120-0223	Stainless steel officer side body with full height 48" wide forward and 48" wide (interior) rearward compartmentation. Includes (1) 60" wide compartment over the wheel well and one (1) ladder storage tunnel and access door at rear with push-button latch.	$14,952

3120-0224	Stainless Steel Officer side body with full height 48" wide forward and 60" wide (interior) rearward compartmentation. Includes (1) 60" wide compartment over the wheel well and one (1) ladder storage tunnel and access door at rear with push-button latch.	$15,700
3120-0225	Stainless steel officer side body with full height 60" wide forward and 60" wide (interior) rearward compartmentation. Includes (1) 60" wide compartment over the wheel well and one (1) ladder storage tunnel and access door at rear with push-button latch.	$15,781
3120-0226	Officer side body with full height 36" wide forward and 36" wide rearward compartmentation. Includes (1) 56" wide compartment over the wheel well.	$9,367
3120-0227	Officer 3/4 side body with full height 60" wide forward and 42" wide rearward compartmentation. Includes (1) 56" wide compartment over the wheel well.	$6,737
3120-0228	Officer 3/4 side body with upper and lower compartmentation. Includes 60" wide forward and 42" wide rearward lower compartments and (3) opening upper compartments.	$7,148
3120-0229	Officer side body with full height 60" wide forward and 42" wide rearward compartmentation. Includes (1) 56" wide compartment over the wheel well.	$10,777
3120-0230	Officer full height side body with upper and lower compartmentation. Includes 60" wide forward and 42" wide rearward lower compartments and (3) opening upper compartments. For use with ladder storage thru tank.	$11,188
3120-0231	Officer side body with full height 60" wide forward and 42" wide rearward compartmentation. Includes (1) 33" wide compartment over the wheel well and (1) Zico Overhead Ladder Rack.	$16,073
3120-0232	Officer side body with full height 36" wide forward and 36" wide rearward compartmentation. Includes (1) 56" wide compartment over the wheel well.	$8,809
3120-0234	Officer side body with full height 48" wide forward and 48" wide rearward compartmentation. Includes (1) 56" wide compartment over the wheel well.	$10,777
3120-0236	Overhead Ladder Rack to be offset forward includes shifting compartment (rearward) over the wheel well.	$520
3120-0238	Officer full height side body with upper and lower compartmentation. Includes 36" wide forward and 36" wide rearward lower compartments and (2) opening upper compartments. Includes (1) Zico Overhead Ladder Rack mounted centered between upper compartments.	$17,481
3120-0239	Officer side compartment top storage box (PR). Locate one forward and one rearward of the ladder rack. Boxes to be smooth plate and painted job color with diamond plate tops. The rearward box to have a rear vertically hinged door with push-button latch. Boxes to have (1) diamond plate lid each with push button latch.	$1,632
3120-0240	Officer 3/4 side body with upper and lower compartmentation. Includes 24" wide forward and 36" wide rearward lower compartments and (2) opening upper compartments.	$5,188
3120-0241	Compartment R1 to have rescue style interior compartment height.	$1,305
3120-0242	Officer side tunnel to hold: (1) 1500 gallon Fol-da-tank.	$547
3120-0243	Officer 3/4 side body with full height 42" wide forward and 48" wide rearward compartmentation. Includes (1) 56" wide compartment over the wheel well.	$5,884
3120-0244	Officer side body with full height 30" wide forward and 50" wide rearward extended compartmentation. Includes (1) 56" wide compartment over the wheel well and (1) 2-Arm Ladder Rack. The ladder rack is to be sanded DA finish and includes amber lights on each end to visually indicate when the rack is in motion.	$25,589
3120-0245	Officer side body with full height 24" wide forward and 36" wide rearward compartmentation. Includes (1) 56" wide compartment over the wheel well.	$7,686
3120-0246	Officer side body with full height 30" wide forward and 36" wide rearward compartmentation. Includes (1) 56" wide compartment over the wheel well.	$8,223
3120-0247	Officer side body with full height 24" wide forward and 50" wide rearward extended compartmentation. Includes (1) 56" wide compartment over the wheel well.	$8,223
3120-0248	Officer side body with full height 30" wide forward and 50" wide rearward extended compartmentation. Includes (1) 56" wide compartment over the wheel well.	$8,763
3120-0249	Officer side body with full height 36" wide forward and 50" wide rearward extended compartmentation. Includes (1) 56" wide compartment over the wheel well.	$9,335
3120-0250	Officer side body with full height 24" wide forward and 50" wide rearward enhanced extended compartmentation. Includes (1) 56" wide compartment over the wheel well.	$8,470
3120-0251	Officer side body with full height 30" wide forward and 50" wide rearward enhanced extended compartmentation. Includes (1) 56" wide compartment over the wheel well.	$9,007
3120-0252	Officer side body with full height 36" wide forward and 50" wide rearward enhanced extended compartmentation. Includes (1) 56" wide compartment over the wheel well.	$9,580
3120-0254	Officer side body with full height 52" wide forward and 52" wide rearward compartmentation. Includes (1) 56" wide compartment over the wheel well.	$10,777
3120-0255	Officer side body with full height 36" wide forward and 50" wide rearward compartmentation. Includes (1) 56" wide compartment over the wheel well.	$9,580
3120-0256	Officer side body with full height 30" wide forward and 50" wide rearward compartmentation. Includes (1) 56" wide compartment over the wheel well.	$9,007
3120-0257	Officer side body with full height 24" wide forward and 50" wide rearward compartmentation. Includes (1) 56" wide compartment over the wheel well.	$8,470
3120-0258	Officer 3/4 side body with full height 24" wide forward and 50" wide rearward compartmentation. Includes (1) 56" wide compartment over the wheel well.	$5,588

3120-0259	Officer 3/4 side body with full height 30" wide forward and 50" wide rearward compartmentation. Includes (1) 56" wide compartment over the wheel well.	$5,923
3120-0260	Officer 3/4 side body with full height 36" wide forward and 50" wide rearward enhanced extended compartmentation. Includes (1) 56" wide compartment over the wheel well.	$6,282
3120-0261	Officer half side body with 24" wide forward and 50" wide rearward compartmentation. Includes adjustable ladder tracks.	$4,629
3120-0262	Officer half side body with 30" wide forward and 50" wide rearward compartmentation. Includes adjustable ladder tracks.	$4,896
3120-0263	Officer half side body with 36" wide forward and 50" wide rearward enhanced extended compartmentation. Includes adjustable ladder tracks.	$5,183
3120-0264	Officer side body with full height 24" wide forward and 50" wide rearward compartmentation. Includes (1) 33" wide compartment over the wheel well and (1) Zico Overhead Ladder Rack.	$14,078
3120-0265	Officer side body with full height 30" wide forward and 50" wide rearward compartmentation. Includes (1) 33" wide compartment over the wheel well and (1) Zico Overhead Ladder Rack.	$14,615
3120-0266	Officer side body with full height 36" wide forward and 50" wide rearward compartmentation. Includes (1) 33" wide compartment over the wheel well and (1) Zico Overhead Ladder Rack.	$15,189
3120-0268	Officer side body with full height 42" wide forward and 56" wide rearward compartmentation. Includes (1) 56" wide compartment over the wheel well.	$10,156
3120-0269	Officer side body with full height 36" wide forward and 42" wide rearward compartmentation. Includes (1) 56" wide compartment over the wheel well and one (1)ladder storage tunnel and access door at rear.	$12,569
3120-0270	Officer side body with full height 42" wide forward and 56" wide rearward compartmentation. Includes (1) 33" wide compartment over the wheel well and (1) Zico Overhead Ladder Rack.	$15,560
3120-0271	Officer 3/4 side body with full height 42" wide forward and 56" wide rearward enhanced extended compartmentation. Includes (1) 56" wide compartment over the wheel well.	$6,668
3120-0272	Officer half side body with 42" wide forward and 56" wide rearward enhanced extended compartmentation. Includes adjustable ladder tracks.	$5,492
3120-0273	Officer side body with full height 36" wide forward and 50" wide rearward enhanced extended compartmentation. Includes (1) 20" wide compartment over the wheel well and (1) E-One center mounted Overhead Ladder Rack.	$15,189
3120-0274	Officer side body with full height 36" wide forward and 50" wide rearward enhanced extended compartmentation. Includes (1) 56" wide compartment over the wheel well.	$10,187
3120-0275	Officer side body with full height 42" wide forward and 56" wide rearward enhanced extended compartmentation. Includes (1) 56" wide compartment over the wheel well.	$10,845
3120-0276	Officer side body with full height 48" wide forward and 62" wide rearward enhanced extended compartmentation. Includes (1) 56" wide compartment over the wheel well.	$11,550
3120-0277	Officer side body with full height 60" wide forward and 56" wide rearward enhanced extended compartmentation. Includes (1) 56" wide compartment over the wheel well.	$12,306
3120-0278	Officer side body with full height 36" wide forward and 50" wide rearward enhanced extended compartmentation. Includes (1) 33" wide compartment over the wheel well and (1) Zico Overhead Ladder Rack.	$16,186
3120-0279	Officer side body with full height 42" wide forward and 56" wide rearward enhanced extended compartmentation. Includes (1) 33" wide compartment over the wheel well and (1) Zico Overhead Ladder Rack.	$16,845
3120-0280	Officer side body with full height 48" wide forward and 62" wide rearward enhanced extended compartmentation. Includes (1) 33" wide compartment over the wheel well and (1) Zico Overhead Ladder Rack.	$17,550
3120-0281	Officer side body with full height 60" wide forward and 56" wide rearward enhanced extended compartmentation. Includes (1) 33" wide compartment over the wheel well and (1) Zico Overhead Ladder Rack.	$18,305
3120-0282	Officer side body with full height 36" wide forward and 50" wide rearward enhanced extended compartmentation. Includes (1) 56" wide compartment over the wheel well and one (1) storage tunnel.	$12,683
3120-0283	Officer side body with full height 42" wide forward and 56" wide rearward enhanced extended compartmentation. Includes (1) 56" wide compartment over the wheel well and one (1) storage tunnel.	$13,342
3120-0284	Officer side body with full height 48" wide forward and 62" wide rearward enhanced extended compartmentation. Includes (1) 56" wide compartment over the wheel well and one (1) storage tunnel.	$14,046
3120-0285	Officer side body with full height 60" wide forward and 56" wide rearward enhanced extended compartmentation. Includes (1) 56" wide compartment over the wheel well and one (1) storage tunnel.	$14,800
3120-0286	Officer 3/4 side body with full height 30" wide forward and 36" wide rearward compartmentation. Includes (1) 56" wide compartment over the wheel well.	$4,940
3120-0287	Officer side body with upper and lower compartmentation. Includes 24" wide forward and 36" wide rearward lower compartments and (2) opening upper compartments. Includes (1) Zico Overhead Ladder Rack centered mounted between upper compartments.	$13,678

3120-0288	Officer full height side body with upper and lower compartmentation. Includes 42" wide forward and 42" wide rearward lower compartments and (2) opening upper compartments. Includes (1) Zico Overhead Ladder Rack mounted centered between upper compartments.	$15,406
3120-0290	Officer side body with full height 30" wide forward and 50" wide rearward enhanced extended compartmentation. Includes (1) 56" wide compartment over the wheel well and one (1) storage tunnel.	$12,071
3120-0291	Officer side body with full height 50" wide forward and 50" wide rearward enhanced extended compartmentation. Includes (1) 33" wide compartment over the wheel well and (1) Zico Overhead Ladder Rack.	$16,845
3120-0292	Officer side body with full height 56" wide forward and 56" wide rearward enhanced extended compartmentation. Includes (1) 33" wide compartment over the wheel well and (1) Zico Overhead Ladder Rack.	$17,549
3120-0293	Officer side body with full height 62" wide forward and 62" wide rearward enhanced extended compartmentation. Includes (1) 33" wide compartment over the wheel well and (1) Zico Overhead Ladder Rack.	$18,253
3120-0294	Officer side body with full height 50" wide forward and 50" wide rearward enhanced extended compartmentation. Includes (1) 56" wide compartment over the wheel well.	$10,845
3120-0295	Officer side body with full height 56" wide forward and 56" wide rearward enhanced extended compartmentation. Includes (1) 56" wide compartment over the wheel well.	$11,550
3120-0296	Officer side body with full height 62" wide forward and 62" wide rearward enhanced extended compartmentation. Includes (1) 56" wide compartment over the wheel well.	$12,253
3120-0297	Officer side body with full height 50" wide forward and 50" wide rearward enhanced extended compartmentation. Includes (1) 56" wide compartment over the wheel well and one (1) ladder storage tunnel and access door at rear.	$13,342
3120-0298	Officer side body with full height 56" wide forward and 56" wide rearward enhanced extended compartmentation. Includes (1) 56" wide compartment over the wheel well and one (1) ladder storage tunnel and access door at rear.	$14,045
3120-0299	Officer side body with full height 62" wide forward and 62" wide rearward enhanced extended compartmentation. Includes (1) 56" wide compartment over the wheel well and one (1) ladder storage tunnel and access door at rear.	$14,749
3120-0300	Officer side body with full height 42" wide forward and 56" wide rearward enhanced extended compartmentation. Includes (1) 56" wide compartment over the wheel well and one (1) storage tunnel and access door at rear.	$13,342
3120-0301	Officer side tunnel to hold: [#LOC].	$547
3120-0302	Officer half side body with 42" wide forward and 42" wide rearward compartmentation.	$4,708
3120-0303	Officer side body with full height 36" wide forward and 36" wide rearward compartmentation. Includes (1) 56" wide compartment over the wheel well and 30 degree angle of departure.	$9,095
3120-0304	Officer side body with full height 62" wide forward and 62" wide rearward enhanced extended compartmentation. Includes (1) 56" wide compartment over the wheel well.	$11,519
3120-0305	Stainless steel officer side body with full height 48" wide forward and 48" wide (interior) rearward compartmentation. Includes (1) 60" wide compartment over the wheel well and one (1) ladder storage tunnel and access door at rear with push-button latch. Upper area of ladder storage to have stop at 8' and be used for misc. storage.	$15,216
3120-0306	Officer side body with 62" wide full height forward enhanced extended compartment, 36" wide half height second forward compartment and 50" wide half height rearward compartmentation. Includes adjustable ladder tracks.	$15,875
3120-0307	Officer side body with full height 24" wide forward and 56" wide rearward extended compartmentation. Includes (1) 33" wide compartment over the wheel well and (1) Zico Overhead Ladder Rack.	$14,674
3120-0308	Officer side body with full height 24" wide forward and 50" wide rearward enhanced extended compartmentation. Includes (1) 56" wide compartment over the wheel well and one (1) ladder storage tunnel and access door at rear.	$13,884
3120-0309	Officer side body with upper and lower compartmentation. Includes 36" wide forward and 50" wide rearward extended lower compartmentation and (2) opening upper compartments with (1) Zico Overhead Ladder Rack centered between the compartments.	$18,057
3120-0310	Officer side body with full height 36" wide forward and 36" wide rearward compartmentation. Includes (1) 33" wide compartment over the wheel well, one (1) storage tunnel and (1) Zico Overhead Ladder Rack.	$17,911
3120-0311	Officer side body with full height 42" wide forward and 42" wide rearward compartmentation. Includes (1) 33" wide compartment over the wheel well, one (1) storage tunnel and (1) Zico Overhead Ladder Rack.	$18,569
3120-0312	Officer side body with full height 48" wide forward and 48" wide rearward compartmentation. Includes (1) 33" wide compartment over the wheel well, one (1) storage tunnel and (1) Zico Overhead Ladder Rack.	$19,274
3120-0313	Officer side body with full height 60" wide forward and 42" wide rearward compartmentation. Includes (1) 33" wide compartment over the wheel well, one (1) storage tunnel and (1) Zico Overhead Ladder Rack.	$20,029

3120-0314	Officer side body with full height 36" wide forward and 50" wide rearward enhanced extended compartmentation. Includes (1) 33" wide compartment over the wheel well, one (1) storage tunnel and (1) Zico Overhead Ladder Rack.	$18,681
3120-0315	Officer side body with full height 42" wide forward and 56" wide rearward enhanced extended compartmentation. Includes (1) 33" wide compartment over the wheel well, one (1) storage tunnel and (1) Zico Overhead Ladder Rack.	$19,341
3120-0316	Officer side body with full height 48" wide forward and 62" wide rearward enhanced extended compartmentation. Includes (1) 33" wide compartment over the wheel well, (1) Zico Overhead Ladder Rack and one (1) storage tunnel.	$20,046
3120-0317	Officer side body with full height 60" wide forward and 56" wide rearward enhanced extended compartmentation. Includes (1) 33" wide compartment over the wheel well, one (1) storage tunnel and (1) Zico Overhead Ladder Rack.	$20,801
3120-0318	Officer side body with full height 36" wide forward and 50" wide rearward enhanced extended compartmentation (2008 body design) with (1) 56" wide compartment over the wheel well and one (1) storage tunnel.	$17,285
3120-0319	Officer half side body with 20" wide forward and 50" wide rearward extended compartmentation. Includes adjustable ladder tracks.	$4,291
3120-0320	Officer side upper body extension. Does not include external upper doors. External framework and platework only.	$2,339
3120-0321	Stainless steel officer side body with full height 30" wide forward and 58" wide rearward enhanced extended compartmentation. Includes (1) 54" wide compartment over the wheel well.	$9,007
3120-0322	Stainless steel officer side body with full height 40" wide forward and 58" wide rearward enhanced extended compartmentation. Includes (1) 54" wide compartment over the wheel well.	$10,198
3120-0323	Stainless steel officer side body with full height 48" wide forward and 58" wide rearward enhanced extended compartmentation. Includes (1) 54" wide compartment over the wheel well.	$10,856
3120-0324	Stainless steel officer side body with full height 30" wide forward and 40" wide rearward compartmentation. Includes (1) 54" wide compartment over the wheel well.	$8,223
3120-0325	Stainless steel officer side body with full height 40" wide forward and 40" wide rearward compartmentation. Includes (1) 54" wide compartment over the wheel well.	$9,415
3120-0326	Stainless steel officer side body with full height 48" wide forward and 40" wide rearward compartmentation. Includes (1) 54" wide compartment over the wheel well.	$10,072
3120-0327	Stainless steel officer half side body with 30" wide forward and 40" wide rearward compartmentation.	$4,113
3120-0328	Stainless steel officer half side body with 40" wide forward and 40" wide rearward compartmentation.	$4,708
3120-0329	Stainless steel officer half side body with 48" wide forward and 40" wide rearward compartmentation. Includes adjustable ladder tracks.	$5,038
3120-0330	Stainless steel officer 3/4 side body with full height 30" wide forward and 40" wide rearward compartmentation. Includes (1) 54" wide compartment over the wheel well.	$5,141
3120-0331	Stainless steel officer 3/4 side body with full height 40" wide forward and 40" wide rearward compartmentation. Includes (1) 54" wide compartment over the wheel well.	$5,884
3120-0332	Stainless steel officer 3/4 side body with full height 48" wide forward and 40" wide rearward compartmentation. Includes (1) 54" wide compartment over the wheel well.	$6,297
3120-0333	Stainless steel officer side body with full height 30" wide forward and 40" wide rearward compartmentation. Includes (1) 38" wide compartment over the wheel well and (1) Zico Overhead Ladder Rack.	$13,831
3120-0334	Stainless steel officer side body with full height 40" wide forward and 40" wide rearward compartmentation. Includes (1) 38" wide compartment over the wheel well and (1) Zico Overhead Ladder Rack.	$15,022
3120-0335	Stainless steel officer side body with full height 48" wide forward and 40" wide rearward compartmentation. Includes (1) 38" wide compartment over the wheel well and (1) Zico overhead ladder rack.	$15,679
3120-0336	Stainless steel officer side body with full height 30" wide forward and 58" wide rearward enhanced extended compartmentation. Includes (1) 38" wide compartment over the wheel well and (1) Zico Overhead Ladder Rack.	$14,615
3120-0337	Stainless steel officer side body with full height 40" wide forward and 58" wide rearward enhanced extended compartmentation. Includes (1) 38" wide compartment over the wheel well and (1) Zico Overhead Ladder Rack.	$15,805
3120-0338	Stainless steel officer side body with full height 48" wide forward and 58" wide rearward enhanced extended compartmentation. Includes (1) 38" wide compartment over the wheel well and (1) Zico Overhead Ladder Rack.	$16,463
3120-0339	Officer half side stainless steel body with 30" wide forward and 58" wide rearward enhanced extended compartmentation. Includes adjustable ladder tracks.	$4,896
3120-0340	Officer half side stainless steel body with 40" wide forward and 58" wide rearward enhanced extended compartmentation. Includes adjustable ladder tracks.	$5,492
3120-0341	Officer half side stainless steel body with 48" wide forward and 58" wide rearward enhanced extended compartmentation. Includes adjustable ladder tracks.	$5,821

3120-0342	Officer 3/4 side stainless steel body with 30" wide forward and 58" wide rearward enhanced extended compartmentation. Includes (1) 54" wide compartment over the wheel well.	$5,923
3120-0343	Officer 3/4 side stainless steel body with 40" wide forward and 58" wide rearward enhanced extended compartmentation. Includes (1) 54" wide compartment over the wheel well.	$6,668
3120-0344	Officer 3/4 side stainless steel body with 48" wide forward and 58" wide rearward enhanced extended compartmentation. Includes (1) 54" wide compartment over the wheel well.	$7,080
3120-0346	Officer half side body with (2) forward compartments (48" and 30" wide) and one rearward area for locating of side tank dump.	$4,286
3120-0347	Officer half side body with (2) forward compartments (48" and 30" wide) and (1) rearward compartment (24").	$5,038
3120-0348	Officer 3/4 side body with (2) lower forward compartments (48" and 30" wide), (3) upper compartments (54") and one lower rearward area for locating of side tank dump.	$5,929
3120-0349	Officer 3/4 side body with (2) lower forward compartments (48" and 30" wide), (3) upper compartments (54") and (1) lower rearward compartment (24").	$6,681
3120-0350	Officer full height side body with (2) lower forward compartments (48" and 30" wide), (3) upper compartments (54") and one lower rearward area for locating of side tank dump.	$7,571
3120-0351	Officer full height side body with (2) lower forward compartments (48" and 30" wide), (3) upper compartments (54") and (1) lower rearward compartment (24").	$8,324
3120-0352	Officer full height side body with (2) full height, rescue style, forward compartments (48" and 30" wide), (1) upper compartment (61" and offset rearward of the rack opening) and one lower rearward area for locating of side tank dump.	$7,571
3120-0353	Officer full height side body with (2) full height, rescue style, forward compartments (48" and 30" wide), (1) upper compartment (61" and offset rearward of the rack opening) and (1) lower rearward compartment (24").	$8,324
3120-0356	Officer full height side body with (2) lower forward compartments (48" and 30" wide), (3) upper compartments (54") with rear compartment face access door for portable tank storage and one lower rearward area for locating of side tank dump.	$8,767
3120-0357	Officer full height side body with (2) lower forward compartments (48" and 30" wide), (3) upper compartments (54") with rear compartment face access door for portable tank storage and (1) lower rearward compartment (24").	$9,519
3120-0358	Officer half side body with 60" wide forward and 42" wide rearward compartmentation.	$5,390
3120-0359	Officer side body with full height 24" wide forward and 50" wide rearward enhanced extended compartmentation. Includes (1) 56" wide compartment over the wheel well and one (1) storage tunnel.	$11,459
3120-0362	Officer full height side body with (2) lower forward compartments (48" and 30" wide), (1) upper forward compartment (54") with rear compartment face access door (wired to door ajar) for enclosed ladder storage and (1) lower rearward compartment (24").	$10,714
3120-0363	Officer full height side body with (2) full height, rescue style, forward compartments (48" and 30" wide), (2) upper compartments (40" wide) and one lower rearward area for locating of side tank dump.	$7,571
3120-0364	Officer full height side body with (2) full height, rescue style, forward compartments (48" and 30" wide), (2) upper compartment (40" wide) and (1) lower rearward compartment (24").	$8,324
3120-0365	(1) officer side roof top compartments with extra width to inboard side. Includes hinged raised compartment lid with turn latches, grab handle(s) and gas shock hold open and drain line(s) ran to below body. The lid to have (1) bracket mounted LED light and to be wired to door ajar indicator in cab.	$4,675
3120-0366	Stainless steel officer side body with full height 48" wide forward and 48" wide rearward compartmentation with reduced upper depth. Includes (1) 54" wide compartment over the wheel well and (1) storage tunnel.	$13,273
3120-0367	Stainless steel officer side body with full height 54" wide forward and 54" wide rearward compartmentation with reduced upper depth. Includes (1) 54" wide compartment over the wheel well and (1) storage tunnel.	$14,336
3120-0368	Stainless steel officer side body with full height 60" wide forward and 60" wide rearward compartmentation with reduced upper depth. Includes (1) 54" wide compartment over the wheel well and (1) storage tunnel.	$15,398
3120-0369	Stainless steel officer side body with full height 48" wide forward and 48" wide rearward compartmentation. Includes 54" wide compartment over the wheel well and a dual arm hydraulic overhead ladder rack.	$10,777
3120-0370	Stainless steel officer side body with full height 54" wide forward and 54" wide rearward compartmentation. Includes 54" wide compartment over the wheel well and a dual arm hydraulic overhead ladder rack.	$11,639
3120-0371	Stainless steel officer side body with full height 60" wide forward and 60" wide rearward compartmentation. Includes 54" wide compartment over the wheel well and a dual arm hydraulic overhead ladder rack.	$12,502
3120-0377	Officer half side tandem body with 30" wide forward and 30" wide rearward compartmentation.	$6,432
3120-0378	Officer half side tandem body with 42" wide forward and 42" wide rearward compartmentation.	$7,027
3120-0379	Officer half side tandem body with 60" wide forward and 54" wide rearward compartmentation.	$7,710

3120-0380	Officer 3/4 side tandem body with full height 30" wide forward and 30" wide rearward compartmentation. Includes (2) 51.5" wide compartments over the wheel well.	$7,448
3120-0381	Officer 3/4 side tandem body with full height 42" wide forward and 42" wide rearward compartmentation. Includes (2) 51.5" wide compartments over the wheel well.	$8,190
3120-0382	Officer 3/4 side tandem body with full height 60" wide forward and 54" wide rearward compartmentation. Includes (2) 51.5" wide compartments over the wheel well.	$9,043
3120-0383	Officer side tandem body with upper and lower compartmentation. Includes 30" wide forward and 30" wide rearward compartments and (4) opening upper compartments.	$10,912
3120-0384	Officer side tandem body with upper and lower compartmentation. Includes 42" wide forward and 42" wide rearward compartments and (4) opening upper compartments.	$12,104
3120-0385	Officer side tandem body with upper and lower compartmentation. Includes 60" wide forward and 54" wide rearward compartments and (4) opening upper compartments.	$13,494
3120-0386	Officer side tandem body with upper and lower compartmentation. Includes 30" wide forward and 30" wide rearward compartments and (4) opening upper compartments. Includes overhead rack opening centered between upper compartments.	$11,348
3120-0387	Officer side tandem body with upper and lower compartmentation. Includes 42" wide forward and 42" wide rearward compartments and (4) opening upper compartments. Includes overhead rack opening centered between upper compartments.	$12,588
3120-0388	Officer side tandem body with upper and lower compartmentation. Includes 60" wide forward and 54" wide rearward compartments and (4) opening upper compartments. Includes overhead rack opening centered between upper compartments.	$14,033
3120-0389	Officer side tandem body with full height 30" wide forward and 30" wide rearward compartmentation. Includes (2) 51.5" wide compartments over the wheel well.	$10,530
3120-0390	Officer side tandem body with full height 42" wide forward and 42" wide rearward compartmentation. Includes (2) 51.5" wide compartments over the wheel well.	$11,721
3120-0391	Officer side tandem body with full height 60" wide forward and 54" wide rearward compartmentation. Includes (2) 51.5" wide compartments over the wheel well.	$13,083
3120-0392	Officer side tandem body with full height 30" wide forward and 30" wide rearward compartmentation. Includes (2) 42" wide compartments over the wheel well and overhead rack opening centered between upper compartments.	$10,950
3120-0393	Officer side tandem body with full height 42" wide forward and 42" wide rearward compartmentation. Includes (2) 42" wide compartments over the wheel well and overhead rack opening centered between upper compartments.-	$12,189
3120-0394	Officer side tandem body with full height 60" wide forward and 54" wide rearward compartmentation. Includes (2) 42" wide compartments over the wheel well and overhead rack opening centered between upper compartments.	$13,606
3120-0401	Officer side body with full height 42" wide forward and 50" wide rearward compartmentation. Includes (1) 33" wide compartment over the wheel well and (1) Zico Overhead Ladder Rack.	$15,375
3120-0402	Officer half side tandem body with with 42" wide forward and one rearward area for locating of side tank dump rearward of the wheel well.	$7,273
3120-0403	Officer side body with full height 60" wide forward and 56" wide rearward compartmentation. Includes (1) 56" wide compartment over the wheel well and one (1) storage tunnel located behind the upper (3) compartment back walls.	$14,030
3120-0404	Officer half side body with 36" wide forward and 31" wide rearward compartmentation. Includes adjustable ladder tracks mounted to outside of hosebed 3x3 and to run full height for max adjustments..	$4,402
3120-0405	Officer side body with full height 46" wide forward and 56" wide rearward enhanced extended compartmentation. Includes (1) 56" wide compartment over the wheel well.	$11,550
3120-0406	Officer side body with full height 50" wide forward and 50" wide rearward compartmentation. Includes (1) 33" wide compartment over the wheel well and (1) Zico Overhead Ladder Rack.	$17,533
3120-0407	Officer side body with full height 42" wide forward and 56" wide rearward enhanced extended compartmentation. Includes (1) 56" wide compartment over the wheel well. Rescue Pumper style compartments for use with low hosebed.	$12,320
3120-0408	Officer side body with full height 36" wide forward and 50" wide rearward enhanced extended compartmentation. Includes (1) 56" wide compartment over the wheel well and one (1) storage tunnel area directly behind the upper compartment area (accessed from the rear end assembly).	$10,531
3120-0410	Officer side body with full height 60" wide forward and 62" wide rearward enhanced extended compartmentation. Includes (1) 56" wide compartment over the wheel well.	$12,682
3120-0411	Officer side body with full height 42" wide forward and 56" wide rearward enhanced extended compartmentation. Includes (1) 56" wide compartment over the wheel well.	$11,336
3120-0412	2-Arm Ladder Rack on Officer Side. The ladder rack includes amber lights on each end to visually indicate when the rack is in motion. Restricts the top folding step (if optioned) from closing completely. Includes mounting bracket (matching rear compartment face or compartment wrap finish) for components mounted on rear compartment face including the stop/tail/turn lights.	$13,599
3120-0413	Officer side body with full height 60" wide forward and 56" wide rearward compartmentation. Includes (1) 33" wide compartment over the wheel well and (1) Zico Overhead Ladder Rack.	$17,533
3120-0414	Officer half side body with (2) forward compartments (39" and 39" wide) and (1) rearward compartment (24").	$6,023

3120-0415	Officer full height side body with upper and lower compartmentation. Includes 48" wide forward and 62" wide enhanced extended rearward lower compartments and (3) opening upper compartments and (1) Zico Overhead Ladder Rack. Upper compartments to be (1) 56" wide forward, Overhead ladder rack, (2) 45" wide compartments rearward of rack.	$17,392
3120-0416	Officer full height side body with upper and lower compartmentation. Includes 60" wide forward and 42" wide rearward lower compartments and (3) opening upper compartments and (1) Zico Overhead Ladder Rack.	$16,485
3120-0417	Officer side body with full height 60" wide forward and 56" wide rearward compartmentation. Includes (1) 56" wide compartment over the wheel well. For use with ladders stored in hosebed.	$11,532
3120-0418	Officer 3/4 side body with full height 42" wide forward and 56" wide rearward enhanced extended compartmentation. Includes (1) 56" wide compartment over the wheel well. Compartments raised 8" due to roll-up doors to allow for addtional storage room.	$10,151
3120-0420	Officer side body with full height 36" wide forward and 45" wide rearward compartmentation. Includes (1) 56" wide compartment over the wheel well.	$10,112
3120-0421	Officer side diamond plate roof top compartment. Includes (2) hinged lift-up access doors with turn latches and grab handle(s) and (1) vertically hinged access door at the rear with push button latch to be. Each access door to be wired to door ajar indicator in cab.	$1,960
3120-0423	Officer side body with full height 32" wide forward and 50" wide rearward compartmentation. Includes (1) 56" wide compartment over the wheel well and one (1) storage tunnel beside the water tank.	$9,184
3120-0424	Officer side body with full height 54" wide forward and 48" wide rearward compartmentation. Includes (1) 56" wide compartment over the wheel well and one (1) storage tunnel located behind the upper (3) compartment back walls.	$13,307
3120-0425	Officer side body with half height 36" wide forward (above fuel fill area) and full height 50" wide rearward enhanced extended compartmentation. Includes (1) 56" wide compartment over the wheel well. Area below forward compartment will be for mounting of fuel fill.	$9,580
3120-0426	Officer side body with full height 26" and 56" wide forward compartments and 56" wide rearward compartmentation. Includes (1) 56" wide compartment over the wheel well and one (1) storage tunnel.	$15,200
3120-0427	Officer side body with full height 60" wide front and 54" wide rear compartments. Includes (1) 60" wide compartment over the wheel well and one (1) storage tunnel located behind reduced upper depth compartments. SS eMAX only.	$17,116
3120-0428	Officer side body with full height 36" wide forward and 50" wide rearward enhanced extended compartmentation. Includes (1) 33" wide compartment over the wheel well and (1) Zico Overhead Ladder Rack. Area below forward compartment will be for mounting of fuel fill.	$16,186
3120-0429	Officer side tandem body with upper and lower compartmentation. Includes 60" wide forward and 54" wide rearward compartments and (1) opening forward upper compartment with painted panels rearward.	$14,441
3120-0437	Rear aluminum smooth plate painted job vertically hinged door on officer side roof top compartments. Includes thumb latch and wiring for door ajar switch.	$186
3120-0438	Stainless steel officer side body with full height 36" wide forward and 48" wide rearward compartmentation. Includes 54" wide compartment over the wheel well and a dual arm hydraulic overhead ladder rack.	$10,818
3120-0439	Officer side body with full height 26" and 56" wide forward and 56" wide rearward compartmentation. Includes (1) 33" wide compartment over the wheel well and (1) Zico Overhead Ladder Rack.	$18,729
3120-0441	Officer half side body with 36" wide forward and 56" wide rearward enhanced extended compartmentation. Includes adjustable ladder tracks.	$5,492
3120-0442	Officer side tandem body with upper and lower compartmentation. Includes 30" wide forward and 54" wide rearward compartments and (4) opening upper compartments. Includes overhead rack opening centered between upper compartments. Includes offseting upper compartments forward due to deck gun location and access panel on upper rear compartment face to deck gun piping.	$12,624
3120-0443	(1) officer side roof top compartment forward of hard suction storage area and (2) roof top comaprtments over hard suction storage area. Includes hinged raised compartment lids with turn latches and grab handle(s). The lids to have (1) bracket mounted LED light and to be wired to door ajar indicator in cab. Includes partition between roof top compartment and hard suction storage area. Floor to be provided above the hard suction storage area to use remaining area above.	$2,577
3120-0444	Officer half side body with 36" wide forward and 56" wide rearward enhanced extended compartmentation. Includes adjustable ladder tracks. 8" compartment raise to allow for taller opening with roll-up doors and smooth plate above wheel well area.	$5,920
3120-0445	Officer side tandem body with 60" wide forward and 54" wide rearward compartmentation. Forward compartment to be full height, rearward to be half height.	$9,501
3120-0446	Officer side diamond plate roof top compartment. Includes vertically hinged access door at the rear with push button latch to be wired to door ajar indicator in cab.	$1,360
3120-0447	Officer side body with full height 54" wide forward and 36" wide rearward compartmentation. Includes (1) 33" wide compartment over the wheel well and (1) Zico Overhead Ladder Rack.	$16,429

3120-0448	Officer side roof top assembly. Does not include external upper doors or internal platework. External framework and platework only.	$1,367
3120-0449	Officer side body with full height 60" wide forward and 56" wide rearward compartmentation. Includes (1) 56" wide compartment over the wheel well.	$11,532
3120-0450	Officer half side body with 36" wide forward and 36" wide rearward compartmentation. Includes 30 degree angle of departure.	$4,410
3120-0451	Officer 3/4 height side body with 66" wide forward and 42" wide rearward compartmentation. Includes (1) 56" wide compartment over the wheel well. For use with custom chassis only.	$6,887
3120-0452	Officer full height side body with 66" wide forward and 42" wide rearward compartmentation. Includes (1) 56" wide compartment over the wheel well. For use with custom chassis only.	$8,558
3120-0453	Officer 3/4 side tandem body with full height 42" wide forward and 59" wide rearward compartmentation. Includes (2) 51.5" wide compartments over the wheel well.	$9,211
3120-0456	Officer side body with full height 26" and 56" wide forward compartments and 56" wide rearward compartmentation. Includes (1) 56" wide compartment over the wheel well.	$12,734
3120-0457	Stainless steel officer side body with full height 48" wide forward and 70" wide rearward enhanced extended compartmentation. Includes (1) 54" wide compartment over the wheel well.	$11,671
3120-0458	Officer high side stainless steel body with 60" front and 60" rear. Five compartments, tandem axle. For use with single arm overhead ladder rack.	$15,480
3120-0460	Officer side tandem body with upper and lower compartmentation. Includes 30" wide forward and 54" wide rearward compartments and (4) opening upper compartments. Includes overhead rack opening centered between upper compartments. Includes offseting upper compartments forward due to deck gun location and access panel on upper rear compartment face to deck gun piping.	$12,624
3120-0461	2-arm ladder rack on officer side. The ladder rack includes Whelen 500 series TIR6 amber lights on each end to visually indicate when the rack is in motion. Restricts the top folding step (if optioned) from closing completely. Includes mounting bracket (if required, matching rear compartment face or compartment wrap finish) for components mounted on rear compartment face.	$14,071
3120-0462	Officer side roof top compartment contents: (2) 6" x 10' hard suction hoses (not included) stored horizontally. Includes stop bracket rearward of hard suction hoses.	$930
3120-0463	Officer side diamond plate roof top compartment. Includes vertically hinged access door at the rear with a "D-Ring" latch handle to be wired to door ajar indicator in cab.	$1,381
3120-0464	Stainless steel officer half side body with 36" wide front and 40" wide rear and 60" wide fender panel.	$4,802
3120-0465	Officer side tandem body with full height (1) 60" wide forward and (1) 60" wide rearward compartmentation. For use with Rear Mount pump.	$16,196
3120-0466	Officer side body with upper and lower compartmentation. Includes 36" wide forward and 36" wide rearward lower compartments and (3) opening upper compartments with (1) 33" wide compartment over the wheel well and (1) Zico Overhead Ladder Rack.	$14,779
3120-0467	Stainless steel officer side body with full height 60" wide forward and 60" wide rearward compartmentation. Includes (1) 54" wide compartment over the wheel well.	$12,342
3120-0468	Stainless steel officer side body with full height 48" wide forward and 58" wide rearward enhanced extended compartmentation. Includes (1) 60" wide compartment over the wheel well.	$11,263
3120-0469	Stainless steel officer side body with full height 54" wide forward and 54" wide rearward compartmentation with custom size reduced upper depth. Includes (1) 54" wide compartment over the wheel well and (1) custom size storage tunnel.	$14,818
3120-0470	Stainless steel officer side body with full height 48" wide forward and 54" wide rearward compartmentation. Includes (1) 54" wide compartment over the wheel well.	$10,856
3120-0471	Officer side tandem body with (2) 34" wide forward and 54" wide rearward compartmentation. (1) forward compartment to be full height, (1) forward and rearward to be half height.	$10,050
3120-0472	Officer 3/4 side body with full height 48" wide forward and 62" wide rearward enhanced extended compartmentation. Includes (1) 56" wide compartment over the wheel well and one (1) storage tunnel.	$12,941
3120-0473	(2) officer side roof top compartments with removable floors and extra width to inboard side. Includes hinged raised compartment lids with turn latches, grab handle(s) and gas shock hold open and drain line(s) ran to below body. Each lid to have (1) bracket mounted LED light and to be wired to door ajar indicator in cab.	$5,832
3120-0474	Rear aluminum smooth plated painted [#COL] vertically hinged door on officer side roof top compartments. Includes thumb latch and wiring for door ajar switch.	$186
3120-0475	Stainless steel officer side body with full height 60" wide forward and 60" wide rearward compartmentation. Includes (1) 54" wide compartment over the wheel well. Upper compartment depth only 12" IPO standard 14" due to 3-section and roof ladders in tunnel.	$12,342
3120-0476	Officer side body with full height 60" wide front and 54" wide rear compartments. Includes (1) 44" wide compartment over the wheel well and one (1) Zico overhead ladder rack. SS eMAX only.	$21,390
3120-0477	(2) Officer side roof top compartments. Includes hinged raised aluminum smooth plate with black Scorpion coating (IPOS diamond plate) compartment lids with turn latches and grab handle(s). Each lid to have (1) bracket mounted LED light and to be wired to door ajar indicator in cab.	$2,638

3120-0478	Officer side tandem body with 60" wide full height forward compartment. Rearward of the forward compartment to 3/4 height with 54" wide rearward compartmentation. Includes (2) 51.5" wide compartments over the wheel well.	$10,779
3120-0479	Officer side body with full height/full depth 30/60" wide front and 54" wide rear compartments. Includes (1) 60" wide compartment over the wheel well. SS eMAX only.	$15,536
3120-0480	Officer side body with full height 30/60" wide front and 54" wide rear compartments. Includes (1) 44" wide compartment over the wheel well, with Zico overhead ladder rack. SS eMAX only.	$22,849
3120-0481	Officer side body with full height 30/60" wide front and 54" wide rear compartments. Includes (1) 60" wide compartment over the wheel well and one (1) storage tunnel located behind reduced upper depth compartments. SS eMAX only.	$18,544
3120-0482	Officer side body with full height 50" wide forward and 42" wide rearward compartmentation. Includes (1) 33" wide compartment over the wheel well, (1) Zico overhead ladder rack. Rear perimeter or body raised 3" for improved departure angle.	$16,429
3120-0483	Officer full height side body with upper and lower compartmentation. Includes 42" wide forward and 56" wide rearward lower enhanced compartmentation and (3) opening upper compartments. For use with ladder storage in the hosebed.	$10,198
3120-0485	Stainless steel officer half side body with 30" wide front and 40" wide rear and 60" wide fender panel. For use with suicide hinged R1 door.	$4,802
3120-0486	Vertical and horizontal partitions located in officer side roof top compartment. Vertical partition located rearward of electric cord reel and horizontal partition located over DOT bottles. Floor to be provided above the DOT bottles to use remaining area above.	$1,117
3120-0487	Officer side body with full height 48" wide forward and 56" wide rearward enhanced extended compartmentation. Includes (1) 56" wide compartment over the wheel well.	$11,550
3120-0488	Vertical door stop for storage tunnel door.	$108
3120-0489	Officer side roof top compartment contents: (1) 10' hard suction hose (not included) stored horizontally. Includes stop bracket rearward of hard suction hoses and Nylatron compartment flooring.	$468
3120-0490	(2) officer side roof top compartments with extra width to inboard side. Includes hinged raised compartment lids with turn latches, grab handle(s) and gas shock hold open and drain line(s) ran to below body. Each lid to have (1) bracket mounted LED light and to be wired to door ajar indicator in cab. Compartment lid construction shall be aluminum smooth plate IPO diamond plate painted Black Scorpion (rough finish).	$5,030
3120-0491	Officer side body with upper and lower compartmentation. Includes 42" wide forward and 42" wide rearward lower compartments, (3) opening upper compartments. Includes (1) 33" wide compartment over the wheel well and (1) Zico Overhead Ladder Rack. Smooth plate compartment top painted black durabak.	$16,125
3120-0492	Officer 3/4 side body with (3) full height, rescue style, (2) forward compartments (48" and 30" wide) and (1) rearward compartment (24"). Includes (1) 56" wide compartment over the wheel well.	$7,079
3120-0493	Officer 3/4 side tandem stainless steel body with 35" front and 35" rear for flat back body design. Includes (2) 42" wide compartments over rear tandem wheels, with side dump valve between.	$10,551
3120-0494	Officer side plate roof top compartment. Includes vertically hinged access door at the rear with push button latch to be wired to door ajar indicator in cab.	$1,360
3120-0495	(2) officer side roof top compartments with extra width to inboard side. Includes hinged raised compartment lids with turn latches, grab handle(s) and gas shock hold open and drain line(s) ran to below body. Each lid to have (2) bracket mounted LED lights and to be wired to door ajar indicator in cab.	$4,758
3120-0496	Officer side tandem body with full height 30" wide forward and 30" wide rearward compartmentation. Includes (2) 42" wide compartments over the wheel well and overhead rack opening centered between upper compartments.	$11,651
3125-0001	Mid-Engine module with 58" wide opening. Forward area of module to have double stacked double crosslays to hold up to 200' of 2.0" DJ (each).	$8,467
3125-0002	Mid engine side access doors (PR) painted job color. Painted surface does not include expanded metal inserts.	$1,270
3125-0003	Mid engine side access doors (PR) diamond plate.	$1,105
3125-0005	eMAX Forward body configuration - SM. Includes a lower double preconnect storage area, upper transverse storage area, rack in upper storage area for (2) backboards (vertically stored offset forward - sleeve each side of center pump access), center front pump access doors and removable center floor in upper area.	$2,231
3125-0007	eMAX crosswalk module. Includes raised floor, walkway storage compartments with push button latches, running boards, (1) dual lighted LED folding step each side and access handrails mounted on the eMAX front body extension.	$1,412
3125-0008	eMAX Forward body configuration - SM. Includes a lower double preconnect storage area, upper preconnect storage area, sleeve in upper storage area for (2) backboards (vertically stored offset forward - sleeve is removable for center pump access), center front pump access doors and removable center floor in upper area.	$2,231
3125-0009	eMAX Forward body configuration - TM. Includes a lower double preconnect storage area, provision for top mount pump operator's panel and center front pump access door.	$2,231

3125-0010	eMAX Forward body configuration. Includes a lower double preconnect storage area, upper transverse storage area with lift-up ptd door, rack in upper storage area for (2) backboards (vertically stored offset forward - sleeve each side of center pump access), center front pump access doors, removable center floor in upper area and upper storage pan.	$2,427
3125-0011	eMAX Forward body configuration - SM. Includes a lower transverse storage area for (2) backboards and (1) stokes basket with boxed out style access door (wired to door ajar). Center area to be sleeved for pump access with center front pump access door and removable center floor area.	$2,035
3125-0013	SS eMAX forward body configuration - SM. Includes a lower double preconnect storage area, upper preconnect storage area, sleeve in upper storage area for (2) backboards (vertically stored offset forward - sleeve is removable for center pump access), center front pump access doors and removable center floor in upper area.	$2,721
3125-0014	eMAX Forward body configuration. Includes a lower transverse storage area, rack in upper storage area for (2) backboards (vertically stored offset forward - sleeve each side of center pump access), upper transverse storage area, center front pump access doors, removable center floor in upper and lower areas and upper storage pan (pan to extend into forward body area and be wider to the rear).	$2,231
3125-0015	eMAX Forward body configuration. Includes a rack in lower storage area for (2) backboards (vertically stored offset forward - sleeve each side of center pump access), lower transverse storage area, upper transverse storage area, center front pump access doors, removable center floor in upper and lower areas and upper storage pan (pan to extend into forward body area and be wider to the rear).	$2,231
3125-0016	eMAX Forward body configuration - SM. Includes a lower double preconnect area, upper transverse storage area, rack in upper storage area for (1) 17' Little Giant ladder (vertically stored offset forward - sleeve each side of center pump access), center front pump access doors and removable center floor in upper area.	$2,457
3125-0017	eMAX Forward body configuration - SM. Includes a transverse storage area above pump panels that include (2) fixed shelves going full length (left to right) of the transverse compartment. The lower most shelf shall be approximately 11" from the floor. It shall accommodate a door on each side approximately 10" in height. The doors shall be mounted below the lower most shelf and shall be recessed approximately 3" from each side. The smooth aluminum doors shall be 3/16" thick, include a thumb latch and have a vertical hinge mounted to the rear side. The second shelf shall be mounted approximately 18" above the lower shelf. The lower area floor shall be constructed from 1/8" smooth aluminum plate and be bolted in to facilitate pump system servicing. The outboard floors of the upper area shall be constructed from 1/8" smooth aluminum plate. The center upper floor shall be 1/8" smooth aluminum plate and removable to provide easy access to the pump manifold and valves.	$2,457
3125-0018	eMAX Forward body configuration - SM. Includes a lower double preconnect storage area, upper transverse storage area with horizontally hinged boxed out door each side with push button latch and pull strap, rack in upper storage area for (2) backboards (vertically stored offset forward - sleeve each side of center pump access) and (1) stokes basket (rearward) - 84.5" long x 24" high x 7.5" deep, center front pump access doors, removable center floor in upper area.	$2,526
3125-0019	SS eMAX forward body configuration - SM. Includes a lower double preconnect storage area, sleeve in upper storage area for backboards or other transverse items with lift-up access door each side (stored offset forward - sleeve is removable for center pump access), center front pump access doors and removable center floor in upper area.	$2,721
3125-0020	eMAX Forward body configuration - TME. Includes a lower double preconnect storage area, upper transverse storage area, rack in upper storage area for (2) backboards (vertically stored offset forward - sleeve each side of center pump access), center front pump access doors and removable center floor in upper area.	$2,231
3125-0021	An eMAX forward body configuration - SM. Includes a lower double preconnect storage area, upper transverse storage area, rack in upper storage area for (1) 13' Little Giant Ladder (vertically stored) no divider and (1) Ferno Model 71-S two piece stokes basket (vertically stored), center front pump access doors with D-Ring latch and removable center floor in upper area.	$2,617
3125-0022	eMAX Forward body configuration - SM. Includes a lower double preconnect storage area, upper transverse storage area with a lift up door (each side) to include pull strap, push button latch, wired to door ajar. Center front pump access doors and removable center floor in upper area.	$2,231
3130-0003	Pump module. Includes 39" wide pump panel opening and running boards.	$4,490
3130-0004	Pump module. Includes 45" wide pump panel opening and running boards.	$4,490
3130-0005	Pump module. Includes 51" wide pump panel opening and running boards.	$4,490
3130-0006	Pump module. Includes 57" wide pump panel opening and running boards.	$4,490
3130-0007	Crosswalk module.Includes running boards, (1) folding step each side and access handrails mounted on the pump module.	$884
3130-0008	Crosswalk module. Includes walkway storage compartments with push button latches, running boards, (1) folding step each side and access handrails mounted on the pump module.	$1,290
3130-0009	Speedlay module. Includes area for (2) speedlays with trays, (1) area for dry storage, lower storage compartments with push button latches and running boards.	$1,547
3130-0010	Transverse Module (narrow). Locate forward of pump area. Includes a single compartment opening per side (with a shallow lower area and a transverse upper area with diamond plate flooring) and running boards.	$1,979

3130-0011	Transverse Module (full width). Locate forward of pump area. Includes a single compartment opening per side (with a shallow lower area and a transverse upper area with smooth plate flooring).	$2,737
3130-0012	Upper SM pump module with double stacked double crosslays and diamond plate storage pan.	$1,323
3130-0013	Upper SM pump module with single stacked double crosslays and diamond plate storage pan.	$1,323
3130-0014	Upper SM pump module with single stacked triple crosslays and diamond plate storage pan.	$1,659
3130-0015	Upper SM pump module with single stacked double crosslay, backboard storage and diamond plate storage pan.	$2,255
3130-0016	Upper TM pump module with double stacked double crosslays.	$1,476
3130-0017	Upper TM pump module with single stacked double crosslays.	$1,476
3130-0018	Upper TM pump module with single stacked double crosslays and backboard storage.	$2,375
3130-0020	Upper TM pump module with diamond plate storage pan.	$1,547
3130-0021	Upper TM pump module with backboard storage and diamond plate storage pan.	$1,895
3130-0022	Speedlay module. Includes area for (2) speedlays with trays, (1) area for backboard storage with hinged doors with latches, lower storage compartments with push button latches and running boards.	$2,447
3130-0023	Speedlay module. Includes area for (3) speedlays with trays, lower storage compartments with push button latches and running boards.	$1,884
3130-0024	Upper SM pump module with diamond plate storage pan (only).	$1,436
3130-0030	Stainless steel pump module. Includes 39" wide pump panel opening and running boards.	$5,615
3130-0031	Stainless steel pump module. Includes 45" wide pump panel opening and running boards.	$5,615
3130-0032	Stainless steel pump module. Includes 51" wide pump panel opening and running boards.	$5,615
3130-0033	Stainless steel pump module. Includes 57" wide pump panel opening and running boards.	$5,615
3130-0036	Stainless steel Speedlay module. Includes area for (2) speedlays with trays, (1) area for dry storage, lower storage compartments with push button latches and running boards.	$1,934
3130-0039	Upper SM pump module with double stacked crosslays and diamond plate storage pan.	$1,653
3130-0051	Stainless Steel Upper SM pump module with diamond plate storage pan (only).	$1,792
3130-0055	Stainless steel speedlay module. Includes area for (3) speedlays with trays, lower storage compartments with push button latches and running boards.	$2,353
3130-0062	Upper SM pump module with quad single stacked crosslays and diamond plate storage pan.	$1,996
3130-0063	Upper SM pump module with quad single stacked crosslays and diamond plate storage pan. The rear crosslay is for dry hose storage.	$1,996
3130-0064	Upper stainless steel SM pump module with quad single stacked crosslays and diamond plate storage pan.	$2,495
3130-0065	Upper stainless steel SM pump module with quad single stacked crosslays and diamond plate storage pan. The rear crosslay is for dry hose storage.	$2,495
3130-0067	Upper TM pump module with single stacked triple crosslays. Includes (2) dividers.	$1,641
3130-0068	Upper TM pump module with single stacked triple crosslays and backboard storage.	$2,839
3130-0069	Upper SM pump module with double stacked triple dry crosslays. Crosslay floor to be hinged and accessed from driver side. Include gas shocks, hold open rod, adj tracks and (2) dividers w/handhold cut-outs on both ends.	$4,143
3130-0070	Pump module. Includes lowered area for lowered upper module and 45" wide pump panel opening and running boards.	$5,615
3130-0071	Upper SM pump module with single stacked triple crosslay, backboard storage and diamond plate storage pan.	$2,592
3130-0072	Upper SM pump module with single stacked triple crosslays and diamond plate storage pan. Upper module to be full width as applicable to match lower module.	$2,487
3130-0083	Speedlay module. Includes area for triple speedlays with divider(s) and lower storage compartments with push button latches and running boards.	$1,884
3130-0084	Speedlay module to have (2) dividers for a triple speedlay configuration. Each divider to be notched for preconnect nozzles. Preconnect plumbing to be internal to the speedlay.	$343
3130-0085	Upper TM pump module with single stacked 2.5" crosslay and 2.5" double single stacked dry crosslay.	$2,375
3130-0086	Driver side SM module extension for vertical exhaust. Includes forward extended running board.	$248
3130-0087	Upper SM pump module with double crosslay with double stack set-up in single stack depth. Includes backboard storage with raised push button latches and diamond plate storage pan (open back style). Crosslay divider to be adjustable side to side with slat style flooring.	$2,592
3130-0088	Speedlay module to have (1) divider for a double configuration. The divider is to be held short for preconnect nozzle. Preconnect plumbing to be internal to the speedlay. Rearward area to be for backboard storage and includes vertically hinged doors with push-button latching.	$643
3130-0089	Upper SM pump module with (5) single stacked crosslays- (4) 1.5" AND (1) 2.5" rearward. Includes open back style pan for generator.	$2,296
3130-0090	Pump module. Includes 63" wide pump panel opening and running boards.	$4,490
3130-0093	Upper SM pump module with double stacked triple crosslays and diamond plate storage pan.	$1,809
3130-0095	Crosswalk module. Includes walkway storage compartments with push button latches, running boards, (1) diamond plate gator grip step each side and access handrails mounted on the pump module.	$1,490

3130-0096	Speedlay module(stacked). Includes area for (2) stacked speedlays and (1) upper speedlay (crosslay style), lower storage compartments with push button latches and running boards. Lower speedlay, upper speedlay and crosslay.	$2,101
3130-0098	Speedlay module full width. Includes area for (4) speedlays, (2) speedlays (stacked) per side with partition in center of module. Includes lower storage compartments with push button latches.	$3,421
3130-0099	Pump module. Includes 45" wide pump panel opening and running boards. Interior of module to have 70" width.	$4,490
3130-0100	Upper SM pump module with triple single stacked crosslays and diamond plate storage pan. Module is for use with a wider lower module base. To include a non-stepped pan with 1.5" extrusion rearward and narrow crosslay widths.	$1,659
3130-0101	Upper SM pump module with single stacked double crosslay, backboard storage and diamond plate storage pan. Interior to be 70" wide to match lower module.	$2,255
3130-0102	Speedlay module(stacked). Includes area for (2) speedlays, lower storage compartments with push button latches and running boards.	$1,884
3130-0103	Speedlay module. Includes area for (2) speedlays with center divider, lower storage compartments with push button latches and running boards.	$1,547
3130-0104	Top mount enclosed pump module. Includes full width single crosslay, backboard storage and storage pan with push button latches and enclosed side pump panels with AM Roll-Up Doors.	$12,671
3130-0105	Ladder access and egress to top of body at [#LOC]. Industrial application	$445
3130-0106	Upper pump module. Includes double, double stacked crosslay area (rearward of module). Forward area to have storage for tools and backboards (horizontally stored). To include diamond plate hinged doors on sides (vertically hinged). The upper are is to have a diamond plate top.	$4,357
3130-0107	Speedlay module. Includes area for (2) speedlays with dividers, (1) area for backboard storage with hinged doors with latches, lower storage compartments with push button latches and running boards.	$2,447
3130-0108	Upper TM pump module with double stacked triple crosslays (single stack depth).	$2,375
3130-0109	Upper TM pump module with single stacked single crosslay, backboard storage and diamond plate storage pan. 2.5" crosslay to be rearward of the backboard storage.	$2,375
3130-0111	Upper SM pump module with single stacked triple crosslay, backboard storage and diamond plate storage pan.	$3,240
3130-0112	Pump Module. Includes 61" wide pump panel opening and running boards. Required with CAFS system. Interior of module to have 70" width.	$4,490
3130-0113	TM Pump Module. Includes triple crosslay area (crosslays to be 4.25"-divider-4.25"-divider-4.25" dry lay with stops provided, bottom of crosslay to be max of 60.5" from ground level with air suspension lowered. In reference to stops provided. Preconnect 1 will be enclosed on driver's side and preconnect 2 will be enclosed on officer's side). Walkway on this module is wider front to rear than standard and the walkway is incorporated into the main module. Driver and Officer runningboard hose trays to be angled and "floating" style..	$7,746
3130-0114	Pump module. Includes 51" wide pump panel opening and running boards. Interior of module to have 70" width.	$4,567
3130-0115	Upper SM pump module with single stacked double crosslays and diamond plate storage pan. Interior of module to have 70" width.	$1,323
3130-0116	Pump module. Includes 39" wide pump panel opening and running boards. Interior of module to have 70" width.	$4,567
3130-0119	Upper TM pump module with diamond plate storage pan. Interior to be 70" wide to match lower module.	$1,547
3130-0120	Crosswalk module.Includes running boards, (1) folding step each side and access handrails mounted on the pump module. Interior to be 70" to match lower module.	$884
3130-0121	Crosswalk module.Includes walkway storage compartments with push button latches, running boards, (1) folding step each side and access handrails mounted on the pump module.Interior to be 70" wide to match lower module.	$1,290
3130-0125	Upper SM pump module with triple single stacked crosslays and diamond plate storage pan. Interior to be 70" wide to match lower module.	$1,659
3130-0127	Upper TM pump module with single stacked double crosslays. Interior to be 70' wide to match lower module.	$1,476
3130-0155	Upper TM pump module with single stacked triple crosslays. Includes (2) dividers. Interior to be 70" to match lower module.	$1,641
3130-0164	Upper SM pump module with double stacked triple crosslays (single stacked depth) and diamond plate storage pan.	$3,840
3130-0165	Upper SM pump module with (5) single stacked crosslays. (4) single stacked 1.5" crosslays, (1) single stacked 2.5" crosslay rearward and diamond plate storage pan.	$2,296
3130-0168	Upper SM pump module with triple single stacked crosslays and wide dry crosslay storage area. The area rearward of crosslays is for deck gun channel.	$6,754
3130-0169	Transverse module to hold: Lower section (1) Stokes basket and (2) backboards. Upper section to hold miscellaneous long handled tools.	$547
3130-0170	Upper SM pump module with double stacked (dry) crosslays and diamond plate storage pan.	$1,323

3130-0171	Transverse Module (narrow). Locate forward of pump area. Includes a single compartment opening per side (with a shallow lower area and a transverse upper area with diamond plate flooring) and running boards. Upper area for triple stacked double crosslay. Transverse floor to be over framerails only, do not extend over tool compartments.	$3,574
3130-0172	Upper SM pump module with triple stacked double crosslays and diamond plate storage pan.	$2,375
3130-0173	Stainless steel speedlay module. Includes area for (2) speedlays with center divider, lower storage compartments with push button latches and running boards.	$1,935
3130-0174	Pump module for top mount enclosed operation. Includes 57" panel opening and area for double stacked double crosslay with storage pan. Module has sanded finish and crosslay floors are slotted for draining.	$8,919
3130-0175	Raised crosswalk module. Includes walkway storage compartments with push button latches, running boards, (1) diamond plate walkway step w/gator grip each side and access handrails mounted on the pump module. Includes 8" raise with 5" high storage compartment with drop down diamond plate doors with push button latches.	$2,497
3130-0176	Upper TM pump module with double stacked double crosslays with backboard storage.	$3,111
3130-0177	Upper SM pump module with backboard storage and diamond plate storage pan. Backboard storage to be located rearward of storage pan. Deck gun channel to be located between pan and back board compartment.	$2,170
3130-0178	Upper SM pump module with 2.5" single stacked double crosslays and diamond plate storage pan.	$1,653
3130-0179	Speedlay module(stacked). Includes area for (2) stacked speedlays and (1) upper storage compartment, lower storage compartments with push button latches and running boards. Lower 1.75 speedlay and upper 2.5 speedlay. Single diamond plate cover for upper storage area. Includes (1) grab handle and (2) hold downs.	$3,264
3130-0180	Transverse Module (narrow). Locate forward of pump area. Includes a single compartment opening per side (with a shallow lower area and a transverse upper area with diamond plate flooring) and running boards. Upper area for single stacked triple crosslay.	$3,574
3130-0181	Pump/Speedlay Module. Includes area for runningboards, upper side stainless steel panels, (2) removable speedlay trays and upper dunage storage pan.	$10,359
3130-0182	Upper SM pump module with triple crosslays (single stacked depth) and diamond plate storage pan. Forward crosslays to be double stacked and rearward crosslay to be single stacked dry lay.	$4,175
3130-0183	Upper SM pump module with double stacked triple crosslays and diamond plate storage pan. Upper module to be full width as applicable to match lower module.	$3,989
3130-0184	Pump module top mount with speedlays. Includes 41" wide pump panel opening, dunnage pan and running boards. Raised top mount walkway includes storage compartments with D-Ring latches, (1) 5" diamond plate top mount walkway step with gator grip each side and access handrails mounted on the pump module. Raised walkway for backboard storage includes diamond plate door with push button latches. Includes area for (2) speedlays with 1.5" plumbing. Driver and Officer side upper pump access panels to be horizontally hinged with diamond plate doors. Includes (2) D-Ring latches and (2) gas shock hold opens for each.	$8,865
3130-0186	Upper TM pump module with double stacked single 2.5" crosslay. Includes area for dry crosslay storage rearward of 2.5".	$2,375
3130-0187	Upper SM pump module with triple single stacked crosslays and diamond plate storage pan. Each crosslay to be 6" wide for nozzle storage.	$1,872
3130-0188	Upper TM pump module with single stacked quad crosslays. Includes (3) dividers.	$1,808
3130-0189	Upper SM pump module with backboard storage and diamond plate storage pan. Backboard storage to be located forward of storage pan.	$2,170
3130-0190	Top Mount Pump Module. Includes area for single stacked double crosslay (notched divider) and TM walkway with folding steps with intergral lights and (2) vertical handrails.	$1,779
3130-0191	Top Mount Pump Module. Includes area for single stacked triple crosslay (notched dividers) and TM walkway with folding steps with integral lights and (2) vertical handrails.	$2,159
3130-0193	Side Mount Pump Module. Includes area for single stacked triple crosslay (notched dividers).	$384
3130-0194	Top Mount Pump Module. Includes area for a double speedlay and TM walkway with folding steps with integral lights and (2) vertical handrails.	$2,815
3130-0195	Top Mount Pump Module. Includes area for a double speedlay, single crosslay and TM walkway with folding steps with integral lights and (2) vertical handrails.	$3,194
3130-0196	Upper SM pump module with single stacked double crosslay, backboard storage and diamond plate storage pan. Backboard storage opening to be 6.5" wide.	$3,892
3130-0197	Upper SM pump module with double stacked double crosslay, backboard storage and diamond plate storage pan.	$4,436
3130-0198	Upper TM pump module with single stacked double crosslays. Each crosslay to hold 100' of 3" DJ.	$3,657
3130-0199	Upper SM pump module with single stacked triple crosslays and diamond plate storage pan. (2) Backboard and Ferno model 6 or EXL scoop stretcher storage box located below the storage pan with lift-up diamond plate door with thumb latches each side. Upper module to be full width as applicable to match lower module.	$4,921

3130-0200	Transverse Module (narrow). Locate forward of pump area. Includes a single compartment opening per side (with a shallow lower area and a transverse upper area with diamond plate flooring) and running boards. Upper area for single stacked quad crosslay. Plumbing to terminate thru outboard extrusion as follows: #1 driver side, #2 officer side, #3 driver side and #4 officer side.	$5,249
3130-0201	Upper SM pump module with 2.5" double stacked double crosslay and diamond plate storage pan. Both preconnects to be offset to officer side of module.	$4,593
3130-0202	Speedlay module(stacked). Includes area for (3) speedlays, lower storage compartments with push button latches and running boards.	$2,101
3130-0203	Transverse Module (narrow). Locate forward of pump area. Includes a single compartment opening per side (with a shallow lower area and a transverse upper area with diamond plate flooring) and upper area for triple stacked double crosslay with backboard storage.	$4,232
3130-0204	Pump module for top mount enclosed operation. Includes 47" panel opening, area for double stacked single crosslay, area for double stacked double speedlay with trays stacked side by side, lower storage compartments with D-ring latches and running boards. Crosslay floor to be slotted for draining. Includes backboard storage forward of crosslay. Includes deck gun channel and open back storage pan rearward of crosslay.	$11,554
3130-0205	Upper TM pump module with backboard storage and diamond plate storage pan. Backboard storage located rearward of storage pan.	$1,895
3130-0206	Upper SM pump module with 2.5" double stacked double crosslays and diamond plate storage pan.	$4,100
3130-0207	Transverse Module (narrow). Locate forward of pump area. Includes a single compartment opening per side (with a shallow lower area and a transverse upper area with diamond plate flooring) and running boards. Upper area for double stacked double crosslay.	$4,118
3130-0208	Pump/Speedlay Module. Includes area for E-ONE supplied runningboards, (2) removable speedlay trays and upper diamond plate panels/doors for access to (2) horizontally stored backboards.	$10,758
3130-0209	Crosswalk module. Includes walkway storage compartments with D-ring latches, running boards, (1) folding step each side and access handrails mounted on the pump module.	$1,554
3130-0210	Speedlay module. Includes area for (2) speedlays with trays, (1) area for backboard storage with hinged doors with latches, lower storage compartments with D-ring latches and running boards. Speedlays to hold 250' of 1.75" DJ hose.	$3,081
3130-0211	Upper SM pump module with quad single stacked crosslays and diamond plate storage pan. Preconnects to located as follows: Preconnects 1 and 3 to be offset to officer side, Preconnects 2 and 4 to be offset to driver side. Crosslays to be 66" high from ground. Includes diamond plate access door on officer side of module with push button latches.	$3,630
3130-0212	Pump module. Includes 57" wide pump panel opening and running boards. Crosslays to be 66" high from ground.	$5,581
3130-0213	Speedlay module to be mounted with backboard storage located forward.	$267
3130-0214	Upper SM pump module with single stacked single crosslay and diamond plate storage pan.	$3,832
3130-0215	Transverse Module (full width). Locate forward of pump area. Includes a single compartment opening per side (with a shallow lower area and a transverse upper area with diamond plate flooring). Upper area for double stacked double crosslay.	$3,557
3130-0216	Upper SM pump module with double stacked triple crosslays and diamond plate storage pan.	$6,019
3130-0217	Speedlay module(stacked). Includes area for (3) 1.75" speedlays, lower storage compartments with push button latches and running boards. Upper speedlay to be dry lay.	$2,101
3130-0218	Upper TM pump module with 2.5" triple stacked single crosslay.	$3,822
3130-0219	Enclosed Pump Module with Triple Speedlays. Includes 45" wide pump panel opening. Includes area for (3) speedlays with trays, lower storage compartments with push button latches forward of pump panel opening. Upper module area to have storage pan.	$15,977
3130-0220	TM Upper module. Includes wide pan and open back style for special reel requirement.	$3,727
3130-0221	TM Pump Module. Includes triple crosslay area (crosslays to be 4.25"-divider-4.25"-divider-4.25") Rearward crosslay to be for a dry lay. Bottom of crosslay to be max of 60.5" from ground level with air suspension lowered. Walkway on this module is wider front to rear than standard and the walkway is incorporated into the main module. Driver and Officer runningboard hose trays to be angled and "floating" style. Special top mount diamond plate walkway access steps. Each step to be positioned where top stepping surface is centered between top of runningboard and top of walkway.	$7,901
3130-0222	Upper TM pump module with single stacked double crosslays. Rearward crosslay to hold 2.5" DJ hose.	$1,966
3130-0224	Upper TM pump module with single stacked triple crosslays, dunnage storage pan and backboard storage. Storage pan located between T/M panel and backboard storage.	$3,522
3130-0225	Pump module. Includes 45" wide pump panel opening and running boards. Includes area forward of pump panel opening for (2) speedlays (stacked), lower storage compartments with push button latches.	$7,624
3130-0226	Upper SM pump module with double stacked double crosslay (single stack depth) and diamond plate storage pan. Built in compartment on officer side of module rearward of crosslays. Compartment dimensions to be approx. 18.5"W x 20"H x 20"D, includes stainless steel door with push button latches. Storage pan to be stepped around compartment. Crosslay divider to be adjustable side to side.	$3,776

3130-0227	Pump module. Includes lowered area for lowered upper module and 51" wide pump panel opening and running boards.	$5,615
3130-0228	Upper SM pump module with single stacked double crosslay, backboard storage and diamond plate storage pan. 2.5" plumbing for rear crosslay.	$2,785
3130-0229	Speedlay module. Includes area for triple speedlays with divider(s) and lower storage compartments with push button latches and running boards.	$2,921
3130-0230	One piece side mount pump module with (2) 4.25" and (1) 5.5" single stacked triple crosslays and diamond plate storage pan. Includes 76" wide (side to side) module with a 45.5" wide pump panel opening and running boards.	$6,149
3130-0231	Speedlay module. Includes area for triple speedlays with divider(s) and lower storage compartments with D-ring latches and running boards.	$2,080
3130-0232	Speedlay module(stacked). Includes area for (3) speedlays, lower storage compartments with push button latches and running boards.	$2,563
3130-0233	Speedlay module. Includes area for triple speedlays with divider(s) and lower storage compartments with push button latches and running boards. Forward speedlay to have 2.5" plumbing.	$2,129
3130-0234	Pump module. Includes 45.5" wide pump panel opening and running boards. Lowered to 45.5" high to allow approx 69" high crosslay height from ground.	$5,549
3130-0235	TM Pump Module. Includes triple crosslay area (crosslays to be 4.25"-divider-4.25"-divider-4.25") and backboard storage forward of crosslays. Bottom of crosslays to be approx. 67" from ground level with air suspension full. Walkway on this module is wider front to rear than standard and the walkway is incorporated into the main module. Driver and Officer runningboards to have hose storage trays. Special top mount diamond plate walkway access steps. Each step to be positioned where top stepping surface is centered between top of runningboard and top of walkway.	$7,901
3130-0236	Upper SM pump module with double stacked double crosslays and diamond plate storage pan. Storage pan to be open back style.	$4,272
3130-0237	Upper TM pump module with 2.5" double stacked single crosslay.	$1,476
3130-0238	Speedlay module. 48"H IPO 54.5"H so as not to block rear windows. Includes area for (2) speedlays with center divider, lower storage compartments with push button latches and running boards.	$2,941
3130-0239	Upper TM pump module with single stacked double crosslays and diamond plate storage pan.	$2,160
3130-0240	Pump module. Includes 51" wide pump panel opening and running boards. Includes modifications for 4x4 and plumbing applications as required.	$5,614
3130-0241	Upper SM pump module with single stacked triple crosslay, backboard storage and diamond plate storage pan. Includes 8"W x 8"H storage rearward of the backboard storage and below the storage pan.	$4,559
3130-0242	Speedlay module(stacked). Includes area for (2) stacked speedlays and (1) upper speedlay (crosslay style), lower storage compartments with push button latches and running boards. Lower speedlay, upper speedlay and crosslay. For use with removable or slide-master tray(s).	$2,620
3130-0243	Transverse Module (narrow). Locate forward of pump area. Includes a single compartment opening per side (with a shallow lower area and a transverse upper area with diamond plate flooring) and running boards. Upper area for triple stacked double crosslay. Includes backboard storage in transverse upper for (5) backboards, each backboard slot be approx. 3" wide.	$5,049
3130-0244	Upper SM pump module with single stacked double crosslays and diamond plate storage pan. Crosslays to be 28" deep.	$1,814
3130-0245	Speedlay module (stacked). Includes area for (2) stacked speedlays with removable trays (each to hold 250' of 2.5" DJ triple stacked), lower storage compartments with push button latches, running boards and upper area dunnage pan.	$6,947
3130-0246	Upper SM pump module with single stacked triple crosslay, backboard storage and diamond plate storage pan. Forward crosslay to be 6" wide and the rearward crosslays to be 6.75" wide.	$4,067
3130-0247	Upper SM pump module with single stacked triple crosslays and diamond plate storage pan. Forward (2) crosslays to be single stack and rearward crosslay to be double stack.	$3,720
3130-0248	Pump module - one piece. Includes 45.5" wide pump panel opening and running boards.	$4,490
3130-0249	Single stacked triple crosslays and diamond plate storage pan. Crosslays 5.5" wide each to hold 200'-1.75"DJ or 150-200'-2.5"DJ.	$1,659
3130-0250	Pump module. Includes 45" wide pump panel opening. Running boards to be smooth plate with gator grip and painted black duraback.	$5,078
3130-0251	Speedlay/crosslay module (stacked). Includes area for (2) speedlays with removable trays (each to hold 200' of 1.75" DJ), upper crosslay for storage of 200' of 2.5" DJ, lower storage compartments with push button latches and running boards.	$6,947
3130-0252	Upper SM pump module with double stacked single crosslay and diamond plate storage pan. Crosslay to be dry lay.	$2,797
3130-0254	Pump module. Includes 75" wide pump panel opening and running boards.	$4,490
3130-0255	Pump/Speedlay Module. Includes area for E-ONE supplied runningboards, (2) removable speedlay trays and upper diamond plate panels/doors for access to (2) horizontally stored backboards.	$5,215

3130-0257	Crosslay plumbing to be run thru a channel on each side of forward upper corner of the lower module. Preconnects to located as follows: Preconnects 1 and 3 to be offset to officer side, Preconnect 2 to be offset to driver side. The plumbing channel to be the width of the crosslay opening. The plumbing channels may require the pump panel and/or pump access door(s) to be modified for clearance.	$1,092
3130-0258	Pump/Speedlay Module. Includes main module lower stainless steel side panels (officer side main panel to be vertically main hinged), diamond plate runningboards, (2) removable speedlay trays with side hand-holds. Upper module to have dunnage storage area.	$7,886
3130-0259	Pump module. Includes 51" wide pump panel opening and running boards. Lowered to allow 70" high crosslay height from ground.	$5,474
3130-0262	Pump module. Includes 45" wide pump panel opening and running boards. Includes modifications for 4x4 and plumbing applications as required.	$5,614
3130-0264	Upper SM pump module with single stacked triple crosslays and diamond plate storage pan. Storage pan to be open back style.	$1,659
3130-0265	Transverse Module (narrow). Locate forward of pump area. Includes a single compartment opening per side (with a shallow lower area and a transverse upper area with diamond plate flooring) and running boards. Upper area for triple crosslay, forward (2) crosslays to be single stacked and rearward crosslay to be double stacked.	$4,340
3130-0266	Transverse Module (narrow). Locate forward of pump area. Includes a single compartment opening per side (with a shallow lower area and a transverse upper area with diamond plate flooring) and running boards. Upper area for double stacked double crosslay.	$4,118
3130-0267	Pump/Speedlay Module. Includes double stacked single crosslay located above the (2) speedlays in the lower area. Includes area for E-ONE supplied runningboards and (2) removable speedlay trays.	$9,274
3130-0271	Upper SM pump module with single stacked triple crosslays and diamond plate storage pan. Forward (2) crosslays to be single stack and rearward crosslay to be double stack. Crosslay plumbing to be located centered in place of outboard.	$3,720
3130-0273	Pump module. Includes 51" wide pump panel opening and running boards. Crosslays to be 73" high from ground.	$6,457
3130-0274	Upper SM pump module with double stacked (single stack depth) double crosslays and diamond plate storage pan. Front headboard stepped down 5" to allow 18" deep crosslays.	$2,642
3130-0275	Upper SM pump module with single stacked double crosslay, backboard storage and diamond plate storage pan. Storage pan to be open back style due to Honda Generator. Storage pan to be 15.75" deep with 3" extrustions to step up generator for air flow.	$3,239
3130-0276	Speedlay module. Includes area for triple speedlays with divider(s) and lower storage compartments with push button latches and running boards. Speedlay module tool compartments to be 20" high.	$2,621
3130-0277	Speedlay module. Includes area for (2) speedlays with trays, lower storage compartments with push button latches and running boards.	$1,744
3130-0278	Pump module. Includes 45" wide pump panel opening and running boards. Includes area forward of pump panel opening for (2) speedlays (stacked), lower storage compartments with push button latches	$6,641
3130-0279	Upper TM pump module with double stacked single crosslay and backboard storage. Crosslay to be rearward of the backboard storage. Crosslay to hold 3" DJ hose.	$3,897
3130-0280	Upper SM pump module with single stacked triple crosslay, backboard storage and diamond plate storage pan. Rearward crosslay to be double stacked for extra capacity.	$4,067
3130-0281	Stainless steel 46" wide lower pump module. Includes side running boards with Gator Grip.	$4,490
3130-0282	Stainless steel 46" wide lower pump module. Includes side running boards with Bustin Tread inserts.	$4,490
3130-0283	Stainless steel 50" wide lower pump module. Includes side running boards with Gator Grip.	$4,490
3130-0284	Stainless steel 50" wide lower pump module. Includes side running boards with Bustin Tread inserts.	$4,490
3130-0285	Stainless steel 54" wide lower pump module. Includes side running boards with Gator Grip.	$4,490
3130-0286	Stainless steel 54" wide lower pump module. Includes side running boards with Bustin Tread.	$4,490
3130-0287	Stainless steel 60" wide lower pump module. Includes side running boards with Gator Grip. This size required for most CAFS units.	$4,490
3130-0288	Stainless steel 60" wide lower pump module. Includes side running boards with Bustin Tread. This size required for most CAFS units.	$4,490
3130-0289	Upper SM stainless steel pump module with single stacked double crosslays and top open storage with treadplate flooring.	$1,323
3130-0290	Upper SM stainless steel pump module with double stacked double crosslays and top open storage with treadplate flooring.	$1,323
3130-0291	Upper SM stainless steel pump module with single stacked triple crosslays and top open storage with treadplate flooring.	$1,659
3130-0292	Upper SM stainless steel pump module with double stacked triple crosslays and top open storage with treadplate flooring.	$1,659
3130-0293	Upper SM stainless steel pump module with single stacked double crosslays and a backboard with top open storage with treadplate flooring.	$2,255

3130-0294	Upper SM stainless steel pump module with double stacked double crosslays and a backboard plus top open storage with treadplate flooring.	$2,255
3130-0295	Upper SM stainless steel pump module with single stacked triple crosslays and a backboard with top open storage with treadplate flooring.	$2,592
3130-0296	Upper SM stainless steel pump module with double stacked triple crosslays and a backboard with top open storage with treadplate flooring.	$2,592
3130-0297	Upper SM stainless steel pump module without crosslays. Top open storage only with treadplate flooring. For use with crosslays mounted on top of a front of pump transverse storage module, or with preconnects in the main hose bed, or as otherwise specified.	$1,436
3130-0298	Upper TM stainless steel pump module with single stacked double crosslays and top open storage with treadplate flooring.	$1,476
3130-0299	Upper TM stainless steel pump module with single stacked double crosslays and a backboard with top open storage (if space available) with treadplate flooring.	$2,375
3130-0300	Upper TM stainless steel pump module without crosslays. Top open storage only with treadplate flooring. For use with various preconnected discharge options.	$1,547
3130-0301	Speedlay module. Includes area for (2) speedlays, (1) area for backboard storage with hinged doors with latches, stainless steel lower storage compartments with push-button latches and running boards.	$2,447
3130-0302	Speedlay module. Includes area for (3) speedlays, stainless steel lower storage compartments with push-button latches and running boards.	$1,884
3130-0303	Speedlay module. Includes area for (2) 1-3/4" speedlays with a sliding tray and center divider, stainless steel lower storage compartments with push-button latches and running boards.	$1,547
3130-0304	Speedlay module. Includes area for (2) speedlays with dividers, (1) area for backboard storage with hinged doors with latches, stainless steel lower storage compartments with push button latches and running boards.	$2,447
3130-0305	Speedlay module. Includes area for triple speedlays with dividers and stainless steel lower storage compartments with push-button latches and running boards.	$1,884
3130-0306	Transverse Module (narrow). Located forward of pump area. Includes a single stainless steel compartment opening per side (with a shallow lower area and a transverse upper area with SS flooring) and running boards with Gator Grip.	$1,979
3130-0307	Transverse module (20" wide) with brushed stainless steel doors. Located forward of pump area and welded integral. Includes a single stainless steel compartment opening per side (with a shallow lower area and a transverse upper area) and side running boards with Bustin Tread.	$1,979
3130-0308	Crosswalk module. Includes stainless steel walkway storage compartments with lift-up access lids and butterfly latches, non-skid running boards with Bustin Tread, and access hand rails mounted one each side to the front of the pump enclosure assembly.	$1,290
3130-0309	Speedlay module (stacked). Module to be full width. Includes area for (2) stacked speedlays and (1) upper speedlay (crosslay style), lower storage compartments with push button latches and running boards. Lower speedlay, upper speedlay and crosslay. For use with removable or slide-master tray(s).	$3,800
3130-0310	Upper SM pump module with diamond plate storage pan (only). Upper module to be full width as applicable to match lower module.	$2,616
3130-0311	Speedlay module(stacked). Includes area for (2) stacked speedlays, lower storage compartments with push button latches and running boards. For use with removable or slide-master tray(s).	$2,080
3130-0312	Upper SM pump module with double stacked double crosslay and diamond plate storage pan. Area rearward of crosslays to be raised 12" due to ladder tunnel above the tank.	$4,067
3130-0313	Pump module. Includes 51" wide pump panel opening and running boards. Crosslays to be 66" high from ground.	$5,581
3130-0314	Pump module. Includes 39" wide pump panel opening and running boards. Includes area forward of pump panel opening for (2) speedlays (stacked), lower storage compartments with push button latches.	$7,624
3130-0315	Pump module. Includes 57" wide pump panel opening and running boards. Includes modifications for 4x4 and plumbing applications as required.	$5,614
3130-0318	Upper SM pump module with double stacked (single stacked depth) double crosslays and diamond plate storage pan.	$1,659
3130-0319	Upper SM pump module with triple crosslays (single stacked depth) and diamond plate storage pan. Forward crosslays to be double stacked and rearward crosslay to be single stacked dry lay.	$2,239
3130-0320	Pump module. Includes 45" wide pump panel opening and running boards. Lowered to allow 70" high crosslay height from ground.	$5,474
3130-0321	Pump module. Includes 51" wide pump panel opening and running boards. Includes area forward of pump panel opening for (2) speedlays (stacked), lower storage compartments with push button latches. For use with removable or slide-master tray(s).	$7,821
3130-0322	Pump module. Includes 33" wide pump panel opening and running boards.	$4,490
3130-0323	Pump module. Includes 39" wide pump panel opening and running boards. Includes modifications for 4x4 and plumbing applications as required.	$5,614
3130-0326	Top Mount Pump Module. Includes area for single stacked double crosslay (notched divider) and TM walkway with dual lighted LED folding steps with intergral lights and (2) vertical handrails.	$1,779

3130-0327	Top Mount Pump Module. Includes area for single stacked triple crosslay (notched dividers) and TM walkway with dual lighted LED folding steps with integral lights and (2) vertical handrails.	$2,159
3130-0328	Top Mount Pump Module. Includes area for a double speedlay and TM walkway with dual lighted LED folding steps with integral lights and (2) vertical handrails.	$2,815
3130-0329	Top Mount Pump Module. Includes area for a double speedlay, single crosslay and TM walkway with dual lighted LED folding steps with integral lights and (2) vertical handrails.	$3,194
3130-0330	Crosswalk module. Includes running boards, (1) dual lighted LED folding step each side and access handrails mounted on the pump module.	$884
3130-0331	Crosswalk module. Includes walkway storage compartments with push button latches, running boards, (1) dual lighted LED folding step each side and access handrails mounted on the pump module.	$1,290
3130-0332	Speedlay module(stacked). Includes area for (2) stacked speedlays and (1) upper speedlay (crosslay style, plumbing to be offset to driver side), lower storage compartments with push button latches and running boards. Lower speedlay, upper speedlay and crosslay. For use with removable or slide-master tray(s).	$2,620
3130-0333	Upper SM pump module with bolt-on top. Includes bracing below bolt-on top for light tower mounting. Vertically hinged stainless steel panels with push button latches on each side of the module.	$1,436
3130-0362	Crosswalk module.Includes running boards, (1) dual lighted LED folding step each side and access handrails mounted on the pump module. Diamond plate walkway plate to be 20" wide due to 2-door Freightliner DEF tank.	$884
3130-0364	Special Top Mount Pump Module. Includes area for a double speedlay and TM walkway with dual lighted LED folding steps with integral lights and (2) vertical handrails. Extend-a-gun piping located in the dunnage pan offset to officer side.	$3,799
3130-0365	Upper top mount triple speedlays and storage in remaining area.	$2,459
3130-0366	Speedlay module full width wtih stokes basket and backboard storage. Includes area for (2) speedlays, lower storage compartments with push button latches. Upper area of module to hold (1) stokes basket and (2) backboards. Includes vertically hinged smooth plate door(s) with push button latches.	$3,958
3130-0367	Upper SM pump module with 2.5" double stacked single crosslay and diamond plate storage pan.	$1,659
3130-0368	Pump module. Includes 51" wide pump panel opening and running boards. Upper SM pump module with single stacked double crosslays with diamond plate storage pan. Crosslays to be 68" high from ground.	$6,102
3130-0376	Upper SM pump module with single stacked triple crosslays and diamond plate storage pan. Forward (2) crosslays to be single stack and rearward crosslay to be double stack.	$2,075
3130-0377	Upper SM pump module with single stacked triple crosslays and diamond plate storage pan. Rearward crosslay to be double stacked dry lay.	$2,642
3130-0378	Pump module. Includes 33" wide pump panel opening and running boards. Includes modifications for front headboard due to special exhaust routing.	$5,614
3130-0379	Pump module. Includes 51" wide pump panel opening and running boards. Running boards to include gator grip and be painted black duraback.	$4,999
3130-0380	Raised crosswalk module. Includes walkway storage compartments with push button latches, running boards, (1) smooth plate walkway step w/gator grip each side and access handrails mounted on the pump module. Includes 8" raise with 5" high storage compartment with drop down aluminum smooth plate doors with push button latches. T/M walkway and walkway access steps to be smooth plate gator grip to be painted black durabak. All access doors on module to be painted gray zolatone.	$3,094
3130-0382	Pump module. Includes 51" wide pump panel opening and running boards. Includes area forward of pump panel opening for (2) speedlays (stacked), lower storage compartments with push button latches.	$7,624
3130-0383	Pump module. Includes 57" wide pump panel opening and running boards. Crosslays to be 70" high from ground.	$5,581
3130-0384	Upper SM pump module with backboard storage and diamond plate storage pan. Backboard storage to be located rearward of storage pan.	$2,170
3130-0385	Pump module. Includes 45" wide pump panel opening and running boards. Includes area forward of pump panel opening for (3) speedlays (stacked), lower storage compartments with push button latches.	$8,120
3130-0386	Pump module. Includes 69" wide pump panel opening and running boards.	$4,490
3130-0388	Crosswalk module with running boards. Includes upper walkway storage compartments with embossed diamond plate lift-up walkway lids (includes gas shock(s) as required to hold the lids at 90 degrees with butterfly style latch(es) for securing in the closed position). Compartments to be large as possible and include (1) light each (match body compartments for brand and type of light)and door ajar indicator wiring. Outboard sides of walkway to have diamond plate panels and each includes (1) intermediate style step and access handrails mounted on the pump module.	$2,037
3130-0389	Pump module. Includes 57" wide pump panel opening and running boards. Includes area forward of pump panel opening for (3) speedlays (stacked), lower storage compartments with push button latches. For use with removable tray(s).	$7,136

3130-0390	Upper SM pump module with single stacked triple crosslays and diamond plate storage pan. Forward (2) crosslays to be single stack and rearward crosslay to be double stack.	$3,720
3130-0391	Upper TM pump module with single stacked triple crosslays. Forward (2) crosslays to be single stack and rearward crosslay to be double stack.	$2,075
3130-0392	Upper TM pump module with single stacked double crosslays and backboard storage. Crosslays to be 6" wide each.	$2,621
3130-0393	Pump module. Includes 45" wide pump panel opening and running boards. Lowered to allow 72" high crosslay height from ground.	$4,490
3130-0394	Pump module. Includes 39" wide pump panel opening and running boards. Includes area forward of pump panel opening for (2) speedlays (stacked), lower storage compartments with push button latches. For use with removable or slide-master tray(s).	$7,821
3130-0395	Upper TM pump module with double stacked double crosslays with backboard storage.	$2,403
3130-0396	Upper SM pump module with double stacked (single stack depth) double crosslays and diamond plate storage pan.	$1,996
3130-0397	Upper SM stainless steel pump module with single stacked triple crosslays and top open storage with treadplate flooring. Crosslay 1 to be a dead lay.	$1,659
3130-0398	Pump module. Includes 45" wide pump panel opening and running boards. Includes area forward of pump panel opening for (2) speedlays (stacked), lower storage compartments with push button latches. For use with removable or slide-master tray(s).	$7,821
3130-0399	Pump module for top mount enclosed operation. Includes 51" panel opening, area for double stacked double speedlay with trays stacked side by side, lower storage compartments with push button latches and running boards. Speedlay floor to be slotted for draining. Includes backboard storage for (3) backboards. Includes deck gun channel and open back storage pan.	$11,554
3130-0400	Pump module. Includes 51" wide pump panel opening and running boards. Lowered to allow 72" high crosslay height from ground.	$4,940
3130-0403	Upper SM pump module with single stacked triple crosslays and transverse storage area rearward of deckgun channel with stainless steel lift-up door with push button latches on driver side.	$2,384
3130-0409	Pump module. Includes 31" wide pump panel opening and running boards.	$4,490
3130-0413	Upper SM pump module with single stacked triple crosslays, deck gun channel and transverse storage area. Transverse storage area to be rearward of the deck gun channel. Includes vertically hinged diamond plate doors with butterfly latches, doors to be hinged rearward.	$2,908
3130-0414	Enclosed Pump Module with Triple Speedlays. Includes 51" wide pump panel opening. Includes area for (3) speedlays with trays, lower storage compartments with push button latches forward of pump panel opening. Upper module area to have storage pan.	$15,977
3130-0415	Upper SM pump module with single stacked triple crosslays and diamond plate storage pan. Each crosslay to be 4.75" wide.	$1,659
3130-0416	Crosswalk module. Includes running boards, (1) dual lighted LED folding step each side and access handrails mounted on the pump module. Includes modifications for 4x4 and plumbing applications as required.	$1,060
3130-0419	Pump module. Includes 39" wide pump panel opening and running boards. Includes modifications for front headboard due to special exhaust routing.	$5,614
3130-0420	Upper SM pump module with double stacked triple crosslays and diamond plate storage pan. Crosslay plumbing to be located as far outboard as possible.	$1,809
3130-0422	Pump module. Includes 45" wide pump panel opening and running boards. Includes area forward of pump panel opening for (3) speedlays (stacked), lower storage compartments with push button latches. For use with removable tray(s).	$8,120
3130-0424	Upper SM pump module with single stacked double crosslays and diamond plate open back storage pan.	$1,323
3130-0426	Upper TM pump module with diamond plate open back storage pan.	$1,744
3130-0427	Upper SM pump module with backboard storage and diamond plate storage pan. Backboard storage to be located forward of storage pan. Backboard storage to be 12" wide and includes divider 4" off forward wall to create two storage spaces.	$2,434
3130-0428	Upper TM pump module with storage area with horizontally hinged access door (wired to door ajar) with push button latches, one each side.	$2,372
3130-0430	Pump module. Includes 39" wide pump panel opening and running boards. Upper SM pump module with double stacked double crosslays. Crosslays to be 66" high from ground.	$6,335
3130-0431	Pump module. Includes 45" wide pump panel opening and running boards. Upper SM pump module with double stacked double crosslays with diamond plate storage pan. Crosslays to be 66" high from ground.	$6,102
3130-0432	Pump module for top mount enclosed operation. Includes 80" panel opening and area for double stacked double crosslay with storage pan. Module has sanded finish and crosslay floors are slotted for draining.	$8,919
3130-0436	Upper SM pump module with single stacked double crosslays and transverse storage area rearward of deckgun channel with aluminum Zolatone lift-up door with push button latches on officer side.	$2,186
3130-0437	Upper SM pump module with single stacked triple crosslays and diamond plate open back storage pan. Duunage pan to be 17.75" deep on driver side due to booster reel height.	$2,150

3130-0438	Speedlay module full width wtih stokes basket and backboard storage. Includes area for (3) speedlays: (1) 2.5" in lower speedlay and (2) 1.5" in upper speedlay, lower storage compartments with push button latches. Upper area of module to hold (1) stokes basket and (2) backboards. Includes vertically hinged smooth plate door(s) with push button latches.	$3,903
3130-0439	Stainless steel 62" wide lower pump module. Includes side running boards with Bustin Tread. This size required for most CAFS units.	$4,586
3130-0440	Upper SM pump module with single stacked triple crosslay, backboard storage and diamond plate storage pan. Rearward crosslays to be double stacked. Crosslays to be 28" deep.	$3,620
3130-0441	Upper TM pump module with double stacked double crosslays. Crosslays to hold 300' of 2.5" DJ hose.	$1,754
3130-0442	Upper SM pump module with single stacked triple crosslays and diamond plate storage pan. Rearward crosslay to hold 150' of 3" DJ hose.	$1,784
3130-0443	Pump module. Includes 51" wide pump panel opening and running boards. Includes area forward of pump panel opening for (2) speedlays (stacked), lower storage compartments with push button latches. Includes modifications for 4x4 and plumbing applications as required.	$8,098
3130-0444	Crosswalk module. Includes walkway storage compartments with push button latches, running boards, (1) dual lighted LED folding step each side and access handrails mounted on the pump module. Includes modifications for 4x4 and plumbing applications as required.	$1,597
3130-0445	Pump module. Includes 39" wide pump panel opening and running boards. Upper SM pump module with single stacked double crosslays and open back storage pan.	$6,086
3130-0447	Pump module. Includes 39" wide pump panel opening and running boards. Includes area forward of pump panel opening for (3) speedlays (stacked), lower storage compartments with push button latches.	$7,523
3130-0449	Top mount eMAX pump module. Includes area for a double speedlay, TM walkway (raised) with compartments, dia plt running boards, folding steps with integral lights and (2) vertical handrails.	$4,866
3130-0450	Pump module top mount with speedlays. Includes 45" wide pump panel opening, dunnage pan and running boards. Top mount walkway includes storage compartments with push button latches, (1) 5" diamond plate top mount walkway step with gator grip each side and access handrails mounted on the pump module. Includes area for (3) speedlays - (2) with 1.5" plumbing and (1) with 2.5" plumbing. The front area of the speedlays to have a removable diamond plate panel with D-ring latches.	$9,899
3130-0451	Pump module. Includes 57" wide pump panel opening and running boards. Upper SM pump module with single stacked triple crosslays, backboard storage and diamond plate storage pan. Crosslays to be 65" high from ground.	$8,469
3130-0452	Speedlay module. Includes area for (2) speedlays with dividers, (1) area for backboard storage with hinged doors with latches, lower storage compartments with D-ring latches and running boards. Speedlays to hold 250' of 1.75 each.	$3,081
3130-0453	Crosswalk module. Includes walkway storage compartments with D-ring latches, running boards, (1) dual lighted LED folding step each side and access handrails mounted on the pump module.	$1,290
3130-0454	Upper SM pump module with double stacked double crosslays and diamond plate storage pan. Crosslay divider to be adjustable side to side.	$1,642
3130-0455	Pump module. Includes 51" wide pump panel opening and running boards. (Tradition style pump module see body layout). Includes area forward of pump panel opening for (2) speedlays (stacked), lower storage compartments with push button latches.	$7,623
3130-0456	Upper TM pump module with double stacked single crosslay and backboard storage.	$2,375
3130-0457	Upper SM pump module with single stacked double crosslay, backboard storage and diamond plate open back storage pan.	$2,545
3130-0458	Upper stainless steel pump module with single stacked quad crosslays and top open storage with treadplate flooring. Crosslay floors lowered to approximately 72" above ground.	$2,592
3130-0459	Speedlay module to be mounted with backboard storage located forward. Two (2) latches shall be used to secure the doors. One (1) top and one (1) bottom.	$276
3130-0460	Upper SM pump module with single stacked double crosslay, backboard storage forward of crosslays and diamond plate open back storage pan.	$2,255
3130-0462	Upper TM pump module with single stacked quad crosslays and backboard storage. Crosslay preconnects to be offset to driver side of module.	$3,302
3130-0464	Upper SM stainless steel pump module with double stacked double crosslays for 1.5" DJ hose and top open storage with treadplate flooring. Width of each of the crosslay beds must be 6.5".	$1,323
3130-0465	Upper SM pump module with quad single stacked crosslays and diamond plate storage pan. The rear crosslay is for dry hose storage. The (3) forward crosslays to be 5.5" wide and the rearward crosslay to be 6" wide.	$2,197
3130-0467	Side Mount Pump Module. Includes area for double stacked double crosslay (notched dividers). Crosslay opening to be same as standard tradition triple crosslay design.	$865
3130-0468	Upper SM pump module with double stacked single crosslay and diamond plate storage pan.	$1,659
3130-0469	Upper SM pump module with quad single stacked crosslays and diamond plate storage pan. Rearward (2) crosslays to be 3" DJ dry lays.	$1,996

3130-0470	Pump module top mount with single stack double crosslay, double speedlay (9" wide) and diamond plate storage pan. Includes 45" wide pump panel opening and running boards. Top mount walkway storage compartments with push button latches, (1) 5" diamond plate top mount walkway step with gator grip each side and access handrails mounted on the pump module. Deck gun to be located in channel centered in storage pan running front to back. Embossed diamond plate covers with D-ring latches (wired to door ajar switch) each side of deck gun channel, covers to be reinforced and hinged to front.	$10,683
3130-0472	Upper SM pump module with single stacked triple crosslay, backboard storage and diamond plate storage pan. Rearward crosslay to be for 2.5" dry lay. Stoage pan to be open back style due to generator.	$3,620
3130-0473	Vertical speedlay module welded integral to front of pump enclosure. Includes 12" wide area for (2) speedlays.	$1,967
3130-0474	Top mount eMAX pump module. Includes area for a double speedlay, TM walkway (raised) with compartments, dia plt running boards, fixed walkway steps and (2) vertical handrails.	$4,866
3130-0475	Upper TM pump module with triple stacked double crosslays.	$1,476
3130-0476	Top mount SS eMAX pump module. Includes area for double speedlays, TM walkway with compartments, treadplate running boards with Bustin Tread inserts and (2) vertical hand rails.	$5,496
3130-0477	Triple Speedlays with Enclosed Pump Panel Full Width Module. Includes 45" wide pump panel opening. Includes area for (3) speedlays and lower storage compartments with push button latches forward of pump panel opening. Backboard/stokes basket storage above the speedlays. Upper module area above the pump panel to have storage pan.	$16,579
3130-0480	Upper SM pump module with single stacked double crosslay, New York Hook storage with horizontal divider 8" off floor and diamond plate open back storage pan.	$2,545
3130-0481	Pump module. Includes 51" wide pump panel opening and running boards. Upper SM pump module with single stacked triple crosslays, backboard storage and diamond plate storage pan. Crosslays to be 72" high from ground.	$7,586
3130-0483	Transverse Module (narrow). Locate forward of pump area. Includes a single compartment opening per side (with a shallow lower area and a transverse upper area with diamond plate flooring) and running boards. Upper area for triple crosslay, forward (2) crosslays to be single stacked for 200' of 1.75 DJ hose per lay and rearward crosslay to be single stacked for 150-200' of 2.50" DJ hose.	$4,147
3130-0484	Upper SM pump module with backboard storage and diamond plate storage pan. Backboard storage to be located forward of storage pan. Deck gun piping to be located forward center area of pan and just rearward of back board compartment.	$2,170
3130-0486	Upper TM pump module with smooth plate storage pan. Side panels to be Zolatone gray. Storage pan to be painted black durabak.	$1,921
3130-0487	Pump module. Includes 57" wide pump panel opening and running boards. Running boards to be painted black durabak.	$4,794
3130-0488	Speedlay module. Includes area for triple speedlays with divider(s) and lower storage compartments with push button latches and running boards. Compartment doors to be painted job color. Running boards to be painted black durabak.	$2,232
3130-0489	Crosswalk module. Includes walkway storage compartments with push button latches, running boards, (1) dual lighted LED folding step each side and access handrails mounted on the pump module. Compartment doors to be painted job color. Crosswalk and running boards to be painted durabak black.	$1,727
3130-0491	Upper SM stainless steel pump module with single stacked triple crosslays and top open storage with treadplate flooring. Capacities of 300', 200' and 200' of hose for selected discharges.	$1,852
3130-0492	Pump module. Includes 45" wide pump panel opening and running boards. Upper SM pump module with single stacked double crosslays with diamond plate storage pan. Crosslays to be 72" high from ground.	$6,102
3130-0493	Speedlay module full width wtih stokes basket and backboard storage. Includes area for (2) speedlays: (2) 1.5" side by side in upper speedlay storage compartments with push button latches. Upper area of module shall have (2) adjustable dividers to hold (1) stokes basket and (2) backboards. Includes vertically hinged smooth plate door(s) with push button latches.	$3,903
3130-0494	Upper TM pump module with a transverse storage compartment with aluminum tread plate vertical hinged doors (1) each end of the compartment and a embossed tread plate top.	$1,878
3130-0495	Enclosed Pump Module with Double Speedlays. Includes 47.5" wide pump panel opening. Includes area for (2) stacked speedlays, lower storage compartments with push button latches forward of pump panel opening. Upper module area to have storage pan.	$16,272
3130-0496	Upper SM pump module with single stacked double crosslay,dry lay storage, 2.5" single stack crosslay, backboard storage and diamond plate storage pan. Crosslays to be 28" deep.	$3,933
3130-0497	Upper TM pump module with modified sides for improved visibility and diamond plate storage pan.	$2,017
3130-0499	Upper stainless steel pump module with single stacked quad crosslays and top open storage with treadplate flooring. Crosslay floors located approximately 75" above ground. Top mount pump module only.	$2,592
3130-0500	Upper SM pump module with forward (2) crosslays to be single stack and rearward crosslay to be double stack includes diamond plate storage pan.	$3,720

3130-0501	Upper SM pump module with single stacked quad crosslays and diamond plate storage pan. Crosslays to be 28" deep due to additional capacity.	$2,386
3130-0503	Crosswalk module. Includes running boards, (1) intermediate style step each side and access handrails mounted on the pump module. Crosswalk, intermediate steps and running boards to be 3/16" aluminum treadplate plate.	$1,141
3130-0504	Speedlay module. Includes area for (2) speedlays 15" front to rear with half height center divider, lower storage compartments with push button latches and running boards.	$2,067
3134-0006	The single gauge panel on the driver's side of the side mount module is to be hinged downward. Includes two (2) cable hold opens, and latches.	$121
3134-0009	The gauge panel(s) on the driver side of the Side Mount module to be hinged upward. Includes two (2) gas shock hold opens and latches.	$121
3134-0011	Officer side pump panel to be vertically hinged on forward extrusion. Panel(s) to be secured in the closed position with push button latches. Upper panel to be held open with gas shock.	$450
3134-0013	Driver and Officer side pump panels to be vertically hinged on forward extrusion. Panels to be (2) or (3) pieces, depending on module height, and secured in the closed position with push button latches. Upper panels to be held open with gas shock.	$897
3134-0015	Stainless steel TM control panel, driver and officer side pump panels.	$872
3134-0017	The TM control panel, driver and officer side pump panels are to be painted Zolatone black.	$734
3134-0018	The TM control panel, driver and officer side pump panels are to be painted Zolatone gray.	$734
3134-0019	The driver and officer side pump panels are to be painted Zolatone black.	$572
3134-0020	The driver and officer side pump panels are to be painted Zolatone gray.	$572
3134-0021	Body mainframe and upper body/hosebed side assemblies for a 95" high body.	$1,192
3134-0026	Pump panel support angles. Locate up to (3) horizontally mounted as required on interior side of the main vertically hinged pump panel(s).	$138
3134-0027	TM control panel to be Zolatone gray and driver and officer side panels to be stainless steel.	$517
3134-0028	Pump panel layout and approval drawing to match existing and/or previous unit. To match as close as possible (Engineering and/or vendor requirements may alter final panel layout).	$380
3134-0036	The TM control panel to be painted zolatone black and the driver and officer side pump panels are to be stainless steel.	$956
3134-0037	Driver side pump panel to be vertically hinged on forward extrusion. Panel to be (2) piece and lower panel to be secured in the closed position with push button latches. Upper panel to be stationary. Includes vertically hinged panel rearward of backboard storage to be secured in the closed position with push button latches.	$629
3134-0038	Diagramatic Color coded overlay around control handles and discharges	$40
3134-0042	Pump panels. Driver side upper pump access panel to be horizontally hinged with diamond plate door. Includes (2) push-button latches and (2) hold opens. Officer side pump panel to be vertically hinged on forward extrusion. Panel to be (2) or (3) pieces, depending on module height, and secured in the closed position with push button latches. Upper panel to be held open with gas shock.	$897
3134-0043	Rear Mount pump access door. Includes (2) push button latches and (2) hold open devices. Door to be [#LOC]. Door to open to 90 degrees and includes pull strap for access from ground.	$438
3134-0048	Rear mount pump panel to be vertically hinged on driver side extrusion. Panel(s) to be secured in the closed position with push button latches.	$629
3134-0049	The main rear pump panel to be vertically hinged along officer side. Includes push-button latches and cable mounted hold open.	$450
3134-0051	Driver and Officer side upper pump access panels to be horizontally hinged with diamond plate doors. Includes (2) D-ring latches and (2) hold opens for each.	$531
3134-0052	Driver side pump panel to be vertically hinged on forward extrusion. Panel to be (2) piece and lower panel to be secured in the closed position with push button latches. Upper panel to be stationary.	$629
3134-0053	Officer side pump panel Escutchion Plate shall be attach with Thumb Latch.	$161
3134-0055	Officer side upper pump access panel to be horizontally hinged with stainless steel door. Includes (2) push button latches and (2) hold open devices.	$190
3134-0056	Driver side panel shall be attach with screw.Officer side pump panels to be vertically hinged on forward extrusion. Panels to be (2) or (3) pieces, depending on module height, and secured in the closed position with push button latches. Upper panels to be held open with gas shock.	$897
3134-0063	The rear mount gauge panel to be hinged upward. Includes (2) mechanical/pneumatic (as applicable to panel size) hold opens and latches.	$143
3134-0064	The gauge panel(s) on the driver side of the Side Mount module to be hinged upward. Panel(s) to include (2) mechanical/pneumatic (as applicable to panel size) hold opens and latches.	$121
3134-0065	Driver and Officer side pump panels. Upper panel to be bolt-on diamond plate panel. Lower pump panel to be vertically hinged on forward extrusion. Panel to be secured in the closed position with push button latches.	$1,258
3134-0066	Officer side upper pump access panel to be horizontally hinged with smooth plate door painted Zolatone black. Includes (2) push button latches and (2) hold open devices.	$572
3134-0067	Driver side pump panel to be full width of pump module due to thru-bolted push/pull rod extrusion.	$124

3134-0068	Driver side panel shall be attach with screw and Escutchion Plate shall be vertically hinge forward.Officer side pump panels to be vertically hinged on forward extrusion. Panels to be (2) or (3) pieces, depending on module height, and secured in the closed position with push button latches. Upper panels to be held open with gas shock.	$897
3134-0069	The stainless steel single gauge panel on the driver side of the side mount pump module is to be hinged downward. Includes two (2) cable hold opens, and latches.	$121
3134-0070	The stainless steel double gauge panels on the driver side of the side mount pump module are to be hinged downward. Includes two (2) cable hold opens and latches, per door. Required with 6" master gauges and/or overcrowded single lower gauge panels.	$246
3134-0072	Driver and officer side mounted pump panels are to be brushed stainless steel.	$493
3134-0073	Driver and officer side mount pump panels are to be stainless steel with black Zolatone finish. Includes black suction and discharge bezels.	$572
3134-0074	The top mount control panel and the driver and officer side pump panels are to be brushed stainless steel.	$872
3134-0075	The top mount control panel and the driver and officer side pump panels are to be stainless steel with a black Zolatone finsh.	$734
3134-0078	Special Driver and Officer side pump panels to be vertically hinged on forward extrusion. Panels to be (2) or (3) pieces, depending on module height, and secured in the closed position with push button latches. Upper panels to be held open with gas shock.	$1,291
3134-0082	Driver side pump panel Escutchion Plate shall be hinge and have thumb Latches.	$243
3134-0083	The main and lower pump panel to be inset in the rear body and to run full height just below the roll-up door drum. Panels to enclosed on the sides and bottom with bolt-in plates matching main panel material.. Panel materials to be [#LOC].	$449
3134-0084	Driver and Officer side upper pump access panels to be horizontally hinged with aluminum smooth plate doors painted job color. Includes (2) push-button latches and (2) hold opens for each.	$572
3134-0086	The side pump intake / discharge panels to be painted Zolatone gray. eMAX only.	$282
3134-0087	Pump operator control panel in driver side forward body compartment to be painted Zolatone gray. eMAX only.	$358
3134-0088	The side pump intake / discharge panels to be painted Zolatone black. eMAX only.	$282
3134-0089	Pump operator control panel in driver side forward body compartment to be painted Zolatone black. eMAX only.	$358
3134-0090	Custom sized stainless steel gauge panel(s) on the driver side of the side mount pump panel are to be hinged downward. Includes two (2) cable hold opens and latches.	$1,697
3134-0091	Officer side upper pump access panel to be horizontally hinged with diamond plate door. Includes (2) push-button latches and (2) hold opens. Lower pump panel Escutchion plate to be vertically hinged forward. Panel to be secured in the closed position with push button latches.	$629
3134-0093	Top mounted pump operator control panel to be painted Zolatone gray. eMAX only.	$294
3134-0094	Top mounted pump operator control panel to be painted Zolatone black. eMAX only.	$294
3134-0095	The upper gauge panel on the enclosed pump panel is to be hinged forward. Side mount eMAX only.	$121
3134-0103	The pump operator's pump panel and rear main pump panels are to be painted Zolatone black.	$572
3134-0104	Officer side upper pump access panel behind crosslays to be horizontally hinged with stainless steel door. Includes (2) push button latches and (2) hold open devices.	$190
3134-0106	Officer side pump panel escutchion plate shall be around each discharge, and pump intakes.	$160
3134-0107	The TM control panel to be stainless steel. The driver and officer side pump panels are to be painted Zolatone black.	$734
3134-0108	Booster reel rewind switch. Switch guarded half moon. Location on driver side upper pump display panel.	$25
3134-0112	Side control pump enclosure structure and panels to be modified as necessary to provide the lowest practical crosslay floor height from the ground.	$1,196
3134-0113	Officer side upper pump access panel to be horizontally hinged with aluminum smooth plate door painted Zolatone black both sides. Includes (2) push button latches and (2) hold open devices.	$227
3134-0114	Driver and officer side mount pump panels are to be stainless steel with gray Zolatone finish.	$572
3134-0117	The main rear pump panel to be vertically hinged along officer side. Includes push-button latches and gas spring(s) mounted in place to hold open.	$528
3134-0118	Rear Mount pump access doors (2) lift-up doors, (1) each side. Includes (1) center slam strip reinforced, (2) push button latches each side and (2) hold open devices each side. Doors to be [#LOC]. Doors to open to 90 degrees and includes pull strap for access from ground.	$438
3134-0121	The side pump intake / discharge panels to be painted Zolatone black. eMAX only.	$344
3134-0122	Pump operator control panel in driver side forward body compartment to be painted Zolatone black. SS eMAX only.	$437
3134-0123	Top mounted pump operator control panel to be painted Zolatone black. SS eMAX only.	$360
3134-0126	The top mount control panel and the driver and officer side pump panels are to be stainless steel. The top panel shall be finished with black Zolatone. The side panels shall remain stainless steel finish.	$734
3134-0127	Driver and officer side mount pump panels are to be stainless steel with black Zolatone finish. Includes brushed suction and discharge bezels (not coated). Includes T bar and trim.	$541

3134-0129	Driver side mount pump panel to be stainless steel with black Zolatone finish. Includes black suction and discharge bezel(s).	$287
3136-0000	Air horn switch at pump panel. Switch to be labeled ''Evacuation Alert''. Location: [#LOC].	$126
3136-0001	Backboard storage compartment located to rear of crosslays. Includes vertically hinged diamond plate access door each side.	$934
3136-0002	Microphone box. Locate at the [#LOC].	$446
3136-0003	Microphone box, Cast Products. Locate at/in the [#LOC].	$415
3136-0004	The lower area of the pump compartment to have a four (4) sided heat pan with two (2) removable (side to side) bottoms. Bottoms to be secured in the closed position with mechanical fasteners.	$908
3136-0005	The crosslay divider(s) to be notched both ends for Task Force Nozzle.	$110
3136-0006	Two (2) pump compartment heaters are to be mounted in the pump area. Locate as low as possible.	$1,476
3136-0007	Two (2) FRC Mansaver bars, (1) each side. Installed at pump module crosswalk area. The bars are to include [#COL] vinyl covers.	$1,142
3136-0010	Stainless steel roller assemblies for crosslays and/or speedlays.	$262
3136-0011	P-Rubber in flex joint(s) between pump module and/or body modules.	$541
3136-0012	Slat flooring. The crosslay and/or speedlays are to have removable slat flooring.	$333
3136-0013	Additional Booster Reel Roller Assembly. Locate opposite side of booster reel.	$219
3136-0015	(2) vertically mounted booster reel spool guide roller assemblies. Locate (1) each side on trailing edge of beavertails/body (as applicable). For use with rear compartment mounted booster reel.	$434
3136-0016	Speedlay module trays mounted to a bi-directional Slide Master tray.	$1,102
3136-0017	Driver side pump enclosure. The driver side lower pump module to be full width and full depth of the module and include area in upper section for mounting of roll-up door.	$2,750
3136-0018	Officer side pump enclosure. The officer side lower pump module to be full width and full depth of the module and include area in upper section for mounting of roll-up door.	$2,750
3136-0020	Air horn switch at pump panel. Switch to be labeled EMERGENCY EVACUATION. Label to have red back ground with white letters. Location: [#LOC].	$130
3136-0023	Microphone Box Cast Products. Locate at/in the [#LOC].	$441
3136-0024	Crosslays to accomadate extra capacity.	$477
3136-0025	Microphone box. Dimensions for microphone box are 14" wide x 6.5" high x 5.5" deep. Locate at the [#LOC].	$489
3136-0026	The crosslay divider(s) to have a hand hold cutout on outboard edge each side of divider(s).	$229
3136-0029	Air horn switch at pump panel. Switch to be labeled ''Air Horn''. Location: [#LOC].	$126
3136-0030	Diamond plate cover for Vogel Auto Lube System. Cover to have cut-outs for checking system fluid levels. Location: driver's side of dunnage pan.	$138
3136-0031	Removable Speedlay Tray(s). The floor of the tray(s) to be slotted to prevent the accumulation of water and allow for ventilation of wet hose.	$543
3136-0033	Crosslay divider(s) to be lowered approx 5'' to provide room for bail handled nozzle(s) below cover.	$110
3136-0034	Microphone box 10W X 6H X 11D located on pump operator panel.	$508
3136-0037	Top mount walkway compartments. Includes spring mounted hinged doors with push button latch. Each compartment includes (1) incandescent light and wired to door adjar indicator.	$811
3136-0042	Stainless steel roller assemblies for crosslays and/or speedlays. Rollers on side extrusions only and scuff plates on bottom extrusions.	$686
3136-0043	Cut-out for Booster Reel. Through upper panel on pump module and dunnage pan. Cut-out to be approx. 14" wide x 6" high for visibility of booster reel. Location(s): Driver and officer side upper pump module.	$161
3136-0044	Pump panel compartments with push button latch. Locate (1) driver side pump panel and (1) officer side pump panel. Compartments to be located in lower forward corner of pump panels. Compartments to be approx. 14" wide x 14" high x 14" deep.	$1,668
3136-0045	Microphone Box Cast Products. Locate at/in the [#LOC].	$441
3136-0049	Deckgun to be located offset to the driver side of the dunnage storage pan.	$599
3136-0050	Extreme weather heat pan plates. Includes interior module area mounted plates for increasing the lower heat pan (forward and rearward) into the lower area of the module for increased heat retaining.	$387
3136-0051	Air horn switch at pump panel. Switch to be labeled ''Code Red''. Location: [#LOC].	$126
3136-0053	Microphone box. Locate at the [#LOC]. Microphone box to be 9"W x 11"H x 6.5"D.	$556
3136-0054	Deckgun to be located offset to the driver side of the dunnage storage pan. Deckgun piping to be recessed as low as possible for use with Akron Apollo Hi-Riser #3431	$599
3136-0055	The speedlay divider(s) to be held 12" short both ends for Nozzles.	$345
3136-0056	The crosslay divider(s) to be held 12" short both ends.	$364
3136-0057	Notched crosslay divider(s) extended both ends to 4" above the floor of the crosslay.	$313
3136-0059	Speedlay module tray(s) mounted to a directional SlideMaster tray. SlideMaster to have 100% extension to one side.	$1,266
3136-0061	Heat pan removable bottoms to have screws and nuts in place of butterfly latches.	$246
3136-0062	Crosslay divider(s) to be adjustable front to rear.	$856
3136-0064	The lower area of the pump compartment to have a four (4) sided heat pan with two (2) removable (side to side) bottoms. Bottoms to be secured in the closed position with butterfly latches.	$908

3136-0066	Microphone box. Dimensions for microphone box are 12.5" wide x 8" high x 6" deep. Locate at the [#LOC].	$489
3136-0067	DEF Tank mounting provision in right side of pump compt. Includes tank supports, heat shield and tank fill access either through pump access door or separate door as applicable.	$323
3136-0069	Speedlay module tray(s) mounted to a directional Slide Master tray. Slide Master to have 100% extension to the officer side.	$1,266
3136-0070	Stainless steel scuff plate assemblies for speedlays. Scuff plates to be on top, bottom and sides of each opening.	$686
3136-0071	Microphone Box Cast Products. Locate at/in the [#LOC].	$415
3136-0073	Removable Poly Speedlay Tray(s). The floor of the tray(s) to be slotted to prevent the accumulation of water and allow for ventilation of wet hose.	$498
3136-0074	Stainless steel scuff plates for crosslays and/or speedlays.	$305
3136-0076	Pump module mounted 3 sided light tower shield with approx 28 degree side slope to the driver side. The shield to be even with top of the body and painted job color.	$1,073
3136-0078	Top mount walkway compartments. Includes spring mounted hinged doors with push button latch. Each compartment includes (1) LED light and wired to door adjar indicator.	$811
3136-0079	Q2B switch at pump panel. Switch to be labeled "Evacuation Alert". Location: [#LOC].	$126
3136-0080	Compartment below the top mount walkway to be labeled "SHOVELS" on each door.	$49
3136-0081	A pump compartment heater with 110V blower to be mounted in the pump area.	$1,150
3136-0083	Removable Poly Speedlay Tray. The floor will be notched for the preconnect swivel to be positioned as required with the tray in the stowed position. The floor of the tray(s) to be slotted to prevent the accumulation of water and allow for ventilation of wet hose.	$498
3136-0085	Cast Products EB0010-1-A microphone box. Locate on driver side pump panel. Hinge door to the right.	$480
3136-0086	Notched crosslay divider(s) on both ends for preconnect line(s) nozzle end storage with NFPA cover(s) in closed position. Additional 45 degree angle notch on inside edge on each side. Crosslay divider(s) to be held 1" short below crosslay cover.	$270
3136-0087	Aluminum splash guard over top of hydraulic pump for cab tilt.	$171
3136-0088	Captive booster reel rollers mounted through panel/module. Locate to booster reel side and size for width of reel assembly.	$358
3136-0090	Speedlay tray - removable. Tray includes a 1.25" extruded alum handle low on each end of tray and slots down each side to facilitate lifting. The floor of the tray shall have poly slides and be slotted to prevent the accumulation of water and allow for ventilation of wet hose.	$543
3136-0091	Vertically hinged access door with push button latch for cord reel in driver side of dunnage pan. Includes cut-out in dunnage pan for access to cord reel rollers. Mount junction box to inside of access door.	$425
3136-0096	Stainless steel roller assemblies for crosslays. Includes handrail the width of the crosslays in place of bottom roller.	$381
3136-0098	Microphone box. Dimensions for microphone box are 12" wide x 12" high x 6" deep. Locate at the [#LOC].	$507
3136-0099	Captive booster reel rollers. (1) mounted through dunnage pan floor rearward of booster reel and (1) thru pump access door. Locate to booster reel side and size for width of reel assembly.	$358
3136-0100	Notched Speedlay divider(s) on the both for connecting preconnect hoses. Notch to be 12"L X 4"H enough room to use a spanner wincher for connecting hoses.	$85
3136-0102	Booster Reel Riser for rollers. Locate with officer side dunnage pan rollers.	$80
3136-0103	Booster Reel Riser for rollers. Locate with driver side dunnage pan rollers.	$79
3136-0107	Microphone box. Locate at the [#LOC]. Microphone box to be 9"W x 11"H x 8"D. Locate Pump operator panel.	$556
3136-0108	(2) vertically mounted booster reel spool guide roller assemblies. Locate (1) each side inside rear body compartment opening. For use with rear compartment mounted booster reel.	$434
3136-0109	Removable Poly Box(s). Box to be located in lower transverse storage area (one each side), approx. 15" high x 14" wide x 34" deep. The floor of the box(es) to be slotted to prevent the accumulation of water and allow for ventilation of wet hose.	$498
3136-0110	Captive booster reel rollers mounted through panel/module. Locate to booster reel side and size for width of reel assembly.	$358
3136-0111	Microphone box. Dimensions for microphone box are 8" wide x 12" high x 6" deep. Locate at the [#LOC].	$489
3136-0114	The running board(s) to be notched for Pistion Intake Valve. Location(s): [#LOC].	$420
3136-0115	The lower area of the pump compartment to have a four (4) sided heat pan with two (2) removable (side to side) bottoms. Lower section of pan designed to provide the maximum amount of ground clearance. Bottoms to be secured in the closed position with butterfly latches.	$908
3136-0116	DEF Tank mounting provision in left side pump compt to the rear of the pump. Includes tank supports and tank fill access door.	$286
3136-0117	P-Rubber in flex joint(s) between pump module and/or body modules. Horizontal across tops and along sides at flex joint(s).	$541
3136-0118	A two (2) piece aluminum pan shall be bolted in place below the pump controls within the pump module. This pan shall utilize .090 aluminum plate to provide a shield to reduce heat loss as the pump controls exit the pump module for the top mount control panel.	$234

3136-0120	Captive booster reel rollers mounted on booster reel assembly. Rollers sized for width of reel assembly.	$358
3136-0121	Speedlay tray - Polypropylene - removable. Tray includes pull out grab handle (poly dowel) down low on each end to facilitate lifting. The trays shall be made from Polypropylene, the floor of the tray shall be slotted to prevent the accumulation of water and allow for ventilation of wet hose.	$771
3136-0122	Commercial chassis requires 3" additional to cab and body gap due to exhaust requirements.	$304
3136-0126	Microphone box. Dimensions for microphone box are 7.5" wide x 15" high x 11" deep. Locate at the [#LOC].	$489
3136-0127	The pump module storage pan shall be upgraded to include a hinged cover. The hinged cover shall be constructed of 3/16" embossed aluminum tread plate, include a grab handle, (2) butterfly latches and hold open device(s). The cover shall be included in the door ajar circuit and may be used a walking surface.	$462
3136-0129	Horizontally hinged access door with D-ring latch for access to officer side of dunnage pan. Includes cut-out in dunnage pan.	$425
3136-0130	Speedlay tray - Polypropylene - removable. Tray includes pull out grab handle (poly dowel) down low on each end to facilitate lifting. The tray(s) shall be sized approximately 18" H X 10" W. The tray(s) shall be made from Polypropylene, the floor of the tray shall be slotted to prevent the accumulation of water and allow for ventilation of wet hose.	$771
3200-0054	Heater rear walk-in area. Locate under bench seat in the body interior.	$1,480
3300-0007	Door single vertically hinged painted. Location(s): [#LOC]	$670
3300-0008	Door double vertically hinged painted. Location(s): [#LOC].	$745
3300-0009	Door single vertically hinged diamond plate. Location(s): [#LOC]	$469
3300-0010	Door double vertically hinged diamond plate. Location(s): [#LOC].	$670
3300-0011	Door single horizontally hinged lift-up painted. Location(s): [#LOC]	$651
3300-0012	Door single horizontally hinged lift-up diamond plate. Location(s): [#LOC]	$505
3300-0013	Door roll up short (up to 45") with satin finish POK. Location(s): [#LOC]	$675
3300-0014	Door roll up tall (greater than 45") with satin finish POK. Location(s): [#LOC]	$966
3300-0015	Door roll up short (up to 45") with painted finish POK. Location(s): [#LOC]	$1,081
3300-0016	Door roll up tall (greater than 45") with painted finish POK. Location(s): [#LOC]	$1,370
3300-0017	Door roll up short (up to 45") with satin finish ROM. Location(s): [#LOC].	$752
3300-0019	Door roll up tall (greater than 45") with satin finish ROM. Location(s): [#LOC].	$1,073
3300-0021	Door roll up short (up to 45") with painted finish ROM. Location(s): [#LOC].	$1,275
3300-0022	Door roll up tall (greater than 45") with painted finish ROM. Location(s): [#LOC].	$1,595
3300-0023	Door single stainless steel vertically hinged painted. Location(s): [#LOC]	$839
3300-0024	Door double stainless steel vertically hinged painted. Location(s): [#LOC]	$856
3300-0025	Door single horizontally hinged drop down painted. Location(s): [#LOC]. Door(s) will have chain hold open devices.	$538
3300-0026	Door single stainless steel horizontally hinged drop down painted. Location(s): [#LOC]	$670
3300-0027	Door bi-fold horizontally hinged diamond plate. Location(s): [#LOC]. Includes upper door mounted guide roller assembly and the lower door will have chains for side or upper rear body mount or bumper style for lower rear body mounted.	$745
3300-0028	Door tri-fold vertically hinged diamond plate. Location(s): [#LOC]	$1,014
3300-0029	Door single stainless steel horizontally hinged lift-up painted. Location(s): [#LOC]	$859
3300-0030	Door double 3-point vertically hinged painted. Location(s): [#LOC]	$1,488
3300-0062	Keyed compartment door latch with #1250 key. Location(s): [#LOC].	$71
3300-0063	Keyed roll-up compartment door with #1250 key. Location(s): [#LOC].	$125
3300-0064	All apparatus doors, body and chassis, are to be keyed alike. Not avail on Commercial Chassis. Requires keyed latch option to be included in shop order.	$276
3300-0065	Electric lock for an ROM roll-up door (EA). The door to lock on both sides of compartment as applicable. Includes manual J236 key lock. Location(s): [#LOC]	$551
3300-0066	Drip pan for a ROM roll-up door (EA). Location(s): [#LOC].	$150
3300-0076	Door double 3-point vertically hinged painted. Location(s): [#LOC]	$1,084
3300-0078	Cleveland door springs provided for all vertically hinged body doors.	$137
3300-0079	Reverse hinge driver side single forward body compartment door. Includes vertically mounted drip rail along forward area of compartment opening (in addition to the horizontal drip rail above the door opening).	$138
3300-0080	Stainless steel interior body door overlay. Each hinged body door interior surface to have a stainless steel overlay. Overlay to fit around any surface mounted items on the door.	$2,794
3300-0081	Keyed compartment door latch (Best Lock). Location(s): [#LOC]	$181
3300-0096	Keyed roll-up compartment door with #J236 key. Location(s): [#LOC]	$125
3300-0097	Keyed compartment door latch with #J236 key. Location(s): [#LOC]	$71
3300-0098	Roll-up door package Amdor. Includes (2) short satin roll-up doors and (4) tall satin roll-up doors. Door pennant plates to be mounted offset forward of the compartment for better contact of external door slats to header plate brush.	$7,284
3300-0099	Intergrated sill plate. Water Dam type door sill for ROM rollup door. Location(s):[#LOC]	$129
3300-0100	Cleveland door springs provided for vertically hinged body door(s). Locate [#LOC].	$137
3300-0102	Polished stainless steel interior body door overlay. Each hinged body door interior surface to have a polished stainless steel overlay. Overlay to fit around any surface mounted items on the door.	$4,191

3300-0103	Door double vertically hinged smooth plate sanded. Location(s): [#LOC].	$745
3300-0104	Keyed compartment Tri-Mark model 030-1300 door locking latch. Location: [#LOC].	$143
3300-0105	Door roll up tall (greater than 45") with satin finish Amdor. Location(s): [#LOC].	$1,401
3300-0106	Door roll up short (up to 45") with satin finish Amdor. Location(s): [#LOC].	$1,003
3300-0107	Pull down straps for lift-up door. Loc: [#LOC].	$92
3300-0117	Reverse hinge officer side single forward body compartment door. Includes vertically mounted drip rail along forward area of compartment opening (in addition to the horizontal drip rail above the door opening).	$138
3300-0119	Door single vertically hinged smooth plate sanded. Location(s): [#LOC]	$670
3300-0120	Electric lock for a ROM roll-up door (EA). The door to lock on both sides of compartment as applicable. Includes manual 1250 key lock. Location(s): [#LOC]	$551
3300-0128	Electric locking D-Ring latch. Includes manual key override. Switch for door to be located below rear intermedite step. Switch to be located out of view while standing at rear of unit. Locate on B1.	$359
3300-0129	Door bi-fold horizontally hinged smooth plate sanded. Location(s): [#LOC].	$810
3300-0130	Door single horizontally hinged drop-down painted. Includes body mounted stops to support the door in the open position. Location(s): [#LOC].	$538
3300-0131	Door bi-fold horizontally hinged painted. Location(s): [#LOC]. Includes upper door mounted guide roller assembly and the lower door will have chains for side or upper rear body mount or bumper style for lower rear body mounted.	$924
3300-0132	Door to be notched for LDH hose. Notch on driver side to be approximately 5.75"W x 3.75"H and notch on officer side door to be approximately 10"W x 3.75"H. Location: B1 door.	$267
3300-0133	Door single horizontally hinged drop-down sanded smooth plate. Location(s): [#LOC].	$427
3300-0134	Door single horizontally hinged lift-up painted. Includes double D-rings due to width of the door. Location(s): [#LOC]	$651
3300-0135	Door double 3-point vertically hinged smooth plate sanded. Location(s): [#LOC]	$1,488
3300-0137	Stainless steel interior door overlay for R2. Overlay to fit around any surface mounted items on the door.	$621
3300-0138	Keyed compartment door latch with #CH751 key. Location(s): [#LOC]	$71
3300-0139	Door double 3-point horizontal hinged painted. Location(s): [#LOC]. Lower door should act as an exterior writing surface, w/ adjustable angles. The paddle latch on the second door shall not protrude past the edge of the door.	$1,488
3300-0140	Door single horizontally hinged drop down diamond plate. Location(s): [#LOC].	$404
3300-0141	Tri-Mark door latch. Location(s): [#LOC].	$71
3300-0142	Stainless steel door single vertically hinged painted. Location(s): [#LOC].	$670
3300-0143	Stainless steel short doors double vertically hinged painted. Location(s): [#LOC].	$745
3300-0144	Stainless steel door horizontally hinged lift-up painted. Location(s): [#LOC].	$651
3300-0145	Stainless steel door single horizontally hinged drop-down, painted. Location(s): [#LOC].	$538
3300-0146	Stainless steel tall doors double 3-point vertically hinged painted. Location(s): [#LOC].	$1,488
3300-0147	Stainless steel short doors double 3-point vertically hinged painted. Location(s): [#LOC].	$1,084
3300-0148	Stainless steel door single vertically hinged brushed, unpainted. Location(s): [#LOC].	$670
3300-0151	Drip pan with drain for a ROM roll-up door (EA). Location(s): [#LOC].	$194
3300-0164	Door double vertically hinged w/rotary latches - painted . Location(s): [#LOC]	$745
3300-0165	Door double vertically hinged w/rotary latches - smooth plate sanded. Location(s): [#LOC].	$745
3300-0166	Door double vertically hinged w/rotary latches - diamond plate. Location(s): [#LOC]	$670
3300-0167	Door double 3-point vertically hinged w/rotary latches - painted. Location(s): [#LOC]	$1,488
3300-0168	Door double 3-point vertically hinged w/rotary latches - painted. For use with compartments up to 50" high. Location(s): [#LOC].	$1,084
3300-0169	Door double 3-point vertically hinged w/rotary latches - smooth plate sanded. Location(s): [#LOC]	$1,488
3300-0174	Keyed roll-up compartment door with #CH751 key. Location(s): [#LOC].	$125
3300-0175	Door roll up short (up to 45") with satin finish Gortite. Location(s): L2 and R2.	$964
3300-0176	Door roll up tall (greater to 45") with satin finish Gortite. Location(s): L1/R1/L3/R3 and B1.	$1,128
3300-0177	Door single horizontally hinged drop down painted. Door will have 2 D-ring handles. Location(s): [#LOC].	$695
3300-0190	Reverse hinge driver side single forward upper body compartment door. Includes vertically mounted drip rail along forward area of compartment opening (in addition to the horizontal drip rail above the door opening).	$138
3300-0191	First closed door of double door compartment to have top and bottom latches (Each).	$210
3300-0192	Polished stainless steel overlay on all double pan door's inner pan on body. 95 mid-mount aerial only. Overlay will be full height and should go around latch, gas shock castings and lock cover.	$1,797
3300-0195	Door roll up tall (greater than 45") with painted finish Amdor. Location(s):[#LOC].	$1,902
3300-0196	Door double vertically hinged painted, includes (2) gas shock-style hold-open device IPOS. Location(s): [#LOC].	$804
3300-0197	Door roll up short (up to 45") with painted finish Amdor. Location(s): [#LOC].	$1,687
3300-0202	Door single horizontally hinged drop-down sanded smooth plate. Location(s): [#LOC].	$427
3300-0204	Door to be notched for 5" LDH hose. Notch to be approximately 8"W x 2.5 "H. Location: top of B1 officer side door.	$267
3300-0205	3-Point latch double doors to have latch brackets installed with "PULL" tags.	$526

3300-0206	Additional roll up door stop latches shall be mounted for B1 at a raised location aligned with the bottom of the ladder tunnel. The raised latches/hooks shall not be included as part the door ajar circuit.	$65
3300-0207	Door bi-fold horizontally hinged smooth plate sanded. Location(s): [#LOC]. Includes upper door mounted guide roller assembly and the lower door will have chains for side or upper rear body mount or bumper style for lower rear body mounted.	$909
3305-0000	Diamond plate generator cover.	$904
3305-0002	Bi-Fold diamond plate cover for the crosslay area. Includes applicable grab handles and (2) hold downs. Non-aerial applications to be tagged as a non-stepping surface.	$792
3305-0003	Single diamond plate cover for the crosslay area. Includes applicable grab handle(s) and (2) hold downs. Non-aerial applications to be tagged as a non-stepping surface.	$536
3305-0006	All hand rails (as applicable) are to have a rubber insert. Includes cab (N/A on commercial chassis), pump module and body.	$1,602
3305-0007	Vinyl [#COL] hose bed cover with attached rear flap(s).	$772
3305-0008	Vinyl [#COL] crosslay cover with attached side flaps.	$271
3305-0009	Compartment underbody with slide-out tray.(**Obsolete** See Sales code 3380-0078) Includes drop down front door with push button latch(es). [#LOC]	$1,720
3305-0010	Compartment underbody. Includes drop down front door with push-button latches. Locate [#LOC].	$1,118
3305-0011	(2) piece aluminum hose bed cover. Includes center hose bed divider with notched rear(as applicable), fill tower(s) access door(s) (as applicable), gas shocks, positive hold opens/hold closed at rear, (2) grab handles front and (2) hand rails rear.	$2,984
3305-0012	(4) piece aluminum hosebed cover. Includes center hosebed divider with notched rear, fill tower(s) access door(s) (as applicable), (2) gas shocks, positive hold-opens/hold-closed at center and at the rear, (6) grab handles- (4) fwd cover and (2) fwd area of rear cover with (2) handrails on rear cover.	$5,326
3305-0013	(2) piece aluminum hose bed cover. Includes dividerless cross structure, fill tower(s) access door(s) (as applicable), (2) gas shocks, positive hold-opens/hold-closed at the rear, (2) grab handles (fwd) and (2) hand rails (rear).	$3,802
3305-0014	(4) piece aluminum hosebed cover. Includes divider-less cross structure, fill tower(s) access door(s) (as applicable), (2) gas shocks, positive hold-opens/hold-closed at center and at the rear, (6) grab handles- (4) fwd cover and (2) fwd area of rear cover with (2) handrails rear of each cover.	$5,598
3305-0015	Vinyl [#COL] speedlay front cover.	$212
3305-0016	Vinyl [#COL] speedlay side covers.	$180
3305-0017	Nylon black strap on running board suction tray (EA). Location: [#LOC].	$71
3305-0021	Vinyl [#COL] hose bed cover with side bungee cords and attached rear flap(s).	$1,074
3305-0022	Vinyl rear cover for diamond plate hose bed cover. Color: [#COL].	$239
3305-0023	Nylon black cargo net at rear of diamond plate or vinyl hose bed cover.	$503
3305-0024	Vinyl [#COL] side covers for diamond plate crosslay cover.	$169
3305-0025	Nylon black cargo net on sides for crosslay cover.	$200
3305-0026	Nylon black cargo net on front of speedlay.	$318
3305-0027	Nylon black cargo net on sides of speedlay.	$232
3305-0028	Vinyl [#COL] cover for running board suction tray. Location: [#LOC].	$169
3305-0029	Nylon black strap on running board suction tray (EA). For use with rolled hose. Location: [#LOC]	$81
3305-0031	(4) piece aluminum low profile dividerless hosebed cover.The hosebed cover to include gas shocks, low pro-file positive hold opens at rear, (2) grab handles- frt and (2) handrails -rear.	$4,147
3305-0032	Cover for side ladder tunnel. To include mounting bracket over upper ladders in pump module and black vinyl cover. Cover to be removable for access to pump area.	$361
3305-0033	Vinyl access cover for fill tower(s).	$178
3305-0034	Vinyl [#COL] hose bed cover without attached rear flap(s). Requires rear cover option.	$654
3305-0035	Diamond plate hosebed deflector. Located at front of hosebed area with angled front edge. To be hinged along forward edge with "T" style hold-downs. To cover all fill towers. The NFPA hosebed light (as applicable) to be located on trailing edge.	$456
3305-0036	TM control panel [#COL] vinyl cover. Includes lower twist locks and velcro front, side and top securing.	$356
3305-0037	Diamond plate generator cover with expanded metal on top and all (4) sides.	$904
3305-0038	Vinyl [#COL] crosslay cover top only.	$229
3305-0039	Diamond plate speedlay cover. Includes fixed rear portion on rear of module (over backboard storage area, if applicable) and hold-open with grab handles on forward area.	$582
3305-0040	Nylon black strap with clip release on running board suction tray (EA). Location: [#LOC]	$126
3305-0041	Vinyl [#COL] hosebed cover with side twist locks and bungee cord attached rear flap(s).	$1,074
3305-0042	Vinyl Red cover for officer side compartment top boxes. Includes snaps on hosebed side and velcro on the sides and outboard edge for securing. Includes notch for overhead ladder rack.	$356
3305-0043	Vinyl Red cover for driver side compartment top box. Includes snaps on hosebed side and velcro on the sides and outboard edge for securing.	$356
3305-0044	Hinged bustin grating cover each side of dunnage pan. Includes permanent mount bustin grating cover over center of dunnage pan. Diamond plate cover to be attached over officer side mounted bustin grating.	$940

3305-0045	Diamond Plate Storage Pan Cover. Includes (1) grab handle and (2) hold downs. Hinge to the front of the storage pan.	$749
3305-0048	Diamond Plate Cord Reel Cover. Includes grab handle and hold downs. Hinge to the front of the storage pan. Includes divider wall to isolate cord reel in pan.	$556
3305-0049	(4) piece aluminum low profile hosebed cover. Includes center hosebed divider with notched rear, fill tower(s) access door(s) (as applicable), (2) gas shocks, low profile positive hold-opens/hold-closed at center and at the rear, (6) grab handles- (4) fwd cover and (2) fwd area of rear cover with (2) handrails rear of each cover.	$5,646
3305-0050	Hosebed cover fill tower support brackets. Includes two (2) "C" shaped plates mounted to the hosebed on either side of the fill tower. Plates are to be as high as the hosebed sides. Includes adding of twist locks to each corner of the hosebed cover tower flap (in addition to the velcro already provided).	$415
3305-0052	Vinyl [#COL] hose bed cover with side snaps and bungee cord attached rear flap(s).	$1,074
3305-0053	Diamond plate cover for the dunnage pan area. Includes permanently mounted panel under ladder rack and hinged panel over remaining pan. Includes (2) butterfly latches to hold closed. Hinge to the rear of dunnage pan.	$661
3305-0054	(3) piece aluminum hosebed cover. Includes cover divider/walkway partion divider and (3) sized as required covers, main positive hold open/closed bracket to forward area of hosebed and remaining middle and rear covers to be pinable, fill tower(s) access door(s) (as applicable), (1) gas shock, each cover to have (2) grab handles located on the inboard side (accessable from the walkway) and a nylon strap attached to each cover for easier closing (attach strap to cover divider so it can be reached at any time while the cover is open) (accessable from the walkway).	$4,844
3305-0057	ROM roll-up hose bed cover with satin finish. Inlcudes a momentary switch located [#LOC] and to be easily accessible from the ground. Includes enclosing the operator housing. Includes (4) vinyl "No Step" tags - (2) each side on outboard sides on top of the cover.	$5,875
3305-0058	Nylon black cargo cover for running board suction tray. Location: [#LOC].	$318
3305-0059	Customer supplied material for covers. Vinyl Lime Green hosebed cover with attached rear flap and crosslay cover with attached side flaps.	$1,297
3305-0060	Diamond plate cover for running board suction tray(s). Includes push-button latches and gator grip. Location(s): [#LOC].	$336
3305-0061	Vinyl black hose bed covers with side twist locks and bungee cord attached rear flap(s). Hose bed to have (1) cover each side of hose bed walkway twist-locks down each side and top of covers.	$2,148
3305-0064	Nylon black strap with aluminum quick-release buckle for hose tray. Strap to attach to side walls of tray down low as applicable. Location: [#LOC].	$103
3305-0065	Compartment underbody with slide-out tray. Includes drop down front door with D-ring latch(es). [#LOC]	$1,985
3305-0068	Vinyl [#COL] hosebed cover with attached rear flap(s). Cover to have snaps and velcro along front (no awning attachment) and sides. No twist locks. The rear bungees to be tie-in versus sown (use ilets sized to secure a looped and tied bungee). Bungee to be easily removed and replaced (by fire department) in field.	$1,308
3305-0069	Diamond plate speedlay cover. Includes fixed rear portion on rear of module (over backboard storage area, if applicable) and hold-open with grab handles on rearward area.	$582
3305-0070	Diamond plate portable pump cover.	$1,101
3305-0071	(4) piece aluminum hosebed cover. Includes divider-less cross structure, fill tower(s) access door(s) (as applicable), (2) gas shocks, positive hold-opens/hold-closed at center and at the rear, (6) grab handles- (4) fwd cover and (2) fwd area of rear cover with (2) handrails rear of each cover. For use with Rear Mount Pumper.	$5,696
3305-0076	The mechanical attachments of the side crosslay and rear hosebed covers to be small clip (black) IPO bungees.	$358
3305-0078	Vinyl [#COL] hosebed cover with attached rear flap(s). Includes mechanical attachements at the forward body, the four corners of the main and rear body/pump module and velcro along the sides.	$945
3305-0080	Diamond plate cover for running board suction tray(s). Includes push-button latches and gator grip. Includes cords to prevent covers from dropping to the ground when removed. Location(s): [#LOC].	$369
3305-0082	(4) piece aluminum hose bed cover. Includes center hose bed divider with notched rear, fill tower(s) access door(s) (as applicable), (2) gas shocks, positive hold-opens/hold-closed at center and at the rear, (6) grab handles- (4) fwd cover and (2) fwd area of rear cover with (2) hand rails on rear cover. A landing platform (sized and positioned as required with overall rear end configuration) with embossed diamond plate surface will be centrally located at the upper rear of the apparatus to assist with hose bed cover operations.	$2,784
3305-0083	(4) piece aluminum hose bed cover. Includes dividerless cross structure, fill tower(s) access door(s) (as applicable), (2) gas shocks, positive hold-opens/hold-closed at center and at the rear, (6) grab handles- (4) fwd cover and (2) fwd area of rear cover with (2) hand rails on rear cover. A landing platform (sized and positioned as required with overall rear end configuration) with embossed diamond plate surface will be centrally located at the upper rear of the apparatus to assist with hose bed cover operations.	$3,802

3305-0084	(4) piece aluminum hosebed cover. Includes center hosebed divider with notched rear, (2) gas shocks, positive hold-opens/hold-closed at center and at the rear, (6) grab handles- (4) fwd cover and (2) fwd area of rear cover with (2) handrails on rear cover. A landing platform (sized and positioned as required with overall rearend configuration) with embossed diamond plate surface will be centrally located at the upper rear of the apparatus to assist with hosebed cover operations.	$3,421
3305-0086	(4) piece aluminum hosebed cover for use with rear mount body. Includes center hosebed divider with notched rear, fill tower(s) access door(s) (as applicable), (2) gas shocks, positive hold-opens/hold-closed at center and at the rear, (6) grab handles- (4) fwd cover and (2) fwd area of rear cover with (2) handrails on rear cover. A landing platform (sized and positioned as required with overall rearend configuration) with embossed diamond plate surface will be centrally located at the upper rear of the apparatus to assist with hosebed cover operations.	$3,057
3305-0087	(4) piece aluminum hosebed cover for use with rear mount body. Includes divider-less cross structure, fill tower(s) access door(s) (as applicable), (4) gas shocks, positive hold-opens/hold-closed at center and at the rear, (6) grab handles- (4) fwd cover and (2) fwd area of rear cover with (2) handrails on rear cover. A landing platform (sized and positioned as required with overall rearend configuration) with embossed diamond plate surface will be centrally located at the upper rear of the apparatus to assit with hosebed cover operations.	$4,540
3305-0088	(4) piece aluminum hosebed cover. Includes center hosebed divider with notched rear, fill tower(s) access door(s) (as applicable), (2) gas shocks, positive hold-opens/hold-closed at center and at the rear, (6) grab handles- (4) fwd cover and (2) fwd area of rear cover with (2) handrails on rear cover. The enhanced extended landing area(s) will be used to assist with hosebed cover operations. For use with Enhanced Extended Rescue Pumper only.	$2,687
3305-0089	(4) piece aluminum hose bed cover. Includes dividerless cross structure, fill tower(s) access door(s) (as applicable), (2) gas shocks, positive hold-opens/hold-closed at center and at the rear, (6) grab handles- (4) fwd cover and (2) fwd area of rear cover with (2) hand rails on rear cover. The enhanced extended landing area(s) will be used to assist with hose bed cover operations. For use with Enhanced Extended Rescue Pumper only.	$3,506
3305-0091	Additional (2) gas shocks at the rear of the hosebed cover.	$108
3305-0092	Additional positive hold-opens/hold-closed at the front of the hosebed cover. Requires front compartment face folding steps to access pins.	$265
3305-0093	Vinyl fire retardent [#COL] hosebed cover with twist locks fasteners and bungee cord attached rear flap(s).	$1,246
3305-0094	Fire Retardent Vinyl [#COL] crosslay cover with attached side flaps.	$540
3305-0095	Booster Reel Cover. Cover to have roll-top access door with handle and held close with rubber latch.	$1,568
3305-0099	Bolt-on aluminum cover for upper ladder tunnel. To include mounting bracket mounted to underside of dunnage storage pan and or other module/body components. Cover to be removable for access to ladder tunnel area.	$606
3305-0101	(4) piece aluminum hosebed cover. Includes center hosebed divider with notched rear, fill tower(s) access door(s) (as applicable), (4) gas shocks, positive hold-opens/hold-closed at center and at the rear, (6) grab handles- (4) fwd cover and (2) fwd area of rear cover with (2) handrails on rear cover. Includes center bracing between forward and rearward covers for mounting of gas shocks for rearward covers.	$2,984
3305-0102	Heavy duty Vinyl Black wheel well cover located in compartments L2 and R2. Cover to be full width drop down protector to prevent damage to painted surfaces below the wheel well compartments.	$540
3305-0118	Vinyl [#COL] [#LOC] storage tunnel front cover.	$212
3305-0122	Vinyl [#COL] upper hose storage cover with attached rear flap located above the ladder tunnel.	$271
3305-0123	Powered (2) piece aluminum hose bed cover. Includes center hose bed divider with notched rear, fill tower(s) access door(s) (as applicable), (2) electric actuators, (2) grab handles forward area of cover with (2) hand rails on rearward area of cover. Partition at front of hose bed to cover electric actuators (approx 4" loss in hose bed length). Includes controls, through VMUX system (if so equipped): (2) momentary controls - (1) left cover and (1) right cover.	$5,425
3305-0124	Vinyl [#COL] crosslay cover with attached side flaps. Cover to have velcro on the top IPO snaps.	$271
3305-0125	(2) piece aluminum hose bed cover. Includes center hose bed divider with notched rear, fill tower(s) access door(s) (as applicable), (2) gas shocks, positive hold-opens/hold-closed at rear, (2) grab handles on fwd area of cover with (2) hand rails on rear of cover. A landing platform (sized and positioned as required with overall rear end configuration) with embossed diamond plate surface will be centrally located at the upper rear of the apparatus to assist with hose bed cover operations.	$2,784
3305-0128	Vinyl rear cover for diamond plate hosebed cover. Cover to be attached with snaps. Color: [#COL].	$337
3305-0130	Vinyl [#COL] crosslay cover with attached side flaps. Cover to have snaps and velcro on the top. No twist locks. The side bungees to be tie-in versus sown (use ilets sized to secure a looped and tied bungee). Bungee to be easily removed and replaced (by fire department) in field.	$459

3305-0136	(2) piece aluminum hosebed cover. Includes center hosebed divider with NO notched rear, fill tower(s) access door(s) (as applicable), (2) gas shocks, positive hold-opens/hold-closed at rear, (2) grab handles on fwd area of cover with (2) handrails on rear of cover. A FULL width step (sized and positioned as required with overall rearend configuration) with embossed diamond plate surface will be located at the upper rear of the apparatus to assist with hosebed cover/hose loading operations.	$3,298
3305-0137	Powered (2) piece aluminum hosebed cover. Includes center hosebed divider with notched rear, fill tower(s) access door(s) (as applicable), (2) eletric actuators, (2) grab handles forward area of cover with (2) handrails on rearward area of cover. Partition at front of hosebed to cover electric actuators (approx 4" loss in hosebed length). Includes control panel on officer side rear compartment face with (3) momentary switches: (1) master on/off, (1) left cover and (1) right cover.	$6,362
3305-0138	Stokes Basket storage box. Located on top of the driver side hosebed cover. To hold (1) stokes basket with access from a horizontally hinged lift-up diamond plate door with a push-button latch.	$779
3305-0141	Diamond plate hosebed deflector located at front of hosebed area with angled front edge. To be hinged along forward edge with "T" style hold-downs.	$434
3305-0142	Vinyl red side covers for diamond plate crosslay cover. Covers to attach to the DP cover with snaps. The lower corners to have bungee cords. Cords are to be tie-in versus sown. Flaps to have eyelets sized to secure individual looped and tied bungees. Cords to be easily removed and replaced (by fire department) in field.	$276
3305-0143	Vinyl rear cover for diamond plate hosebed cover. Cover to attach to the DP cover with snaps. The lower edge to have bungee cords. Cords are to be tie-in versus sown. Flap to have eyelets sized to secure individual looped and tied bungees. Cords to be easily removed and replaced (by fire department) in field. Color: Red	$351
3305-0144	(4) piece aluminum hosebed cover. Includes center hosebed divider with notched rear, fill tower(s) access door(s) (as applicable), (2) gas shocks, positive hold-opens/hold-closed at center and at the rear, (8) handrails - (4) forward cover and (4) rearward cover. The enhanced extended landing area(s) will be used to assist with hosebed cover operations. For use with Enhanced Extended Rescue Pumper only.	$3,022
3305-0145	Zico ladder control switching wiring cover.	$102
3305-0147	Nylon yellow strap with aluminum quick-release buckle for hose tray. Strap to attach to side walls of tray down low as applicable. Location: [#LOC].	$103
3305-0149	Nylon yellow cargo net on sides for crosslay cover. Cover to have snaps in place of bungees.	$281
3305-0150	Nylon yellow cargo net at rear of diamond plate or vinyl hosebed cover. Cover to have snaps in place of bungees.	$538
3305-0152	Vinyl speedlay cover. For use with individual preconnect module with side by side storage. Includes mechanical hold-downs on top outer corners and quick-release side flap hold downs. Cover color: [#COL].	$314
3305-0157	Nylon yellow cargo net on sides of speedlay. Covers to have snaps in place of bungees.	$271
3305-0158	Diamond Plate Booster Reel Cover. Includes (1) grab handle and (2) hold downs. Hinge towards the front of the storage pan. Includes partitions located around booster reel.	$1,360
3305-0159	Hosebed cover hold open devices to be thru bolted on side of 3x3 hosebed side extrusions.	$103
3305-0163	Powered (2) piece aluminum hosebed cover. Includes center hosebed divider with notched rear, fill tower(s) access door(s) (as applicable), (2) eletric actuators, (2) grab handles forward area of cover with (2) handrails on rearward area of cover. Partition at front of hosebed to cover electric actuators (approx 4" loss in hosebed length). Includes control panel on driver side rear body with (3) momentary switches: (1) master on/off, (1) left cover and (1) right cover.	$5,425
3305-0164	Nylon black cargo net hosebed cover with attached rear flap(s).	$1,004
3305-0166	Nylon black strap with aluminum quick-release buckle for hose tray. Strap to attach to side walls of tray down low as applicable. For use with rolled hose. Location: [#LOC].	$113
3305-0168	Vinyl [#COL] hose bed cover with side bungee cords without attached rear flap(s). Requires rear cover option.	$957
3305-0169	Diamond plate cover for the dunnage pan area. Includes (2) butterfly latches to hold closed. Hinge to the rear of dunnage pan.	$661
3305-0170	Spring hold down for hose tray. Spring to attach to side wall of tray with scuff plate on pump panel. Location: [#LOC].	$137
3305-0171	Diamond plate speedlay cover (3/16" diamond plate). Includes fixed rear portion on rear of module (over backboard storage area, if applicable) and hold-open with grab handles on rearward area.	$607
3305-0172	Diamond plate booster reel cover with open sides for hose deployment.	$806
3305-0174	Single diamond plate cover for the crosslay area. Includes applicable grab handle(s) and (2) hold downs. Cover to be embossed diamond plate.	$589
3305-0175	Vinyl fire retardent [#COL] hose bed cover with attached rear flap(s).	$964
3305-0176	Vinyl fire retardent [#COL] side covers for diamond plate crosslay cover.	$212
3305-0177	Vinyl fire retardent [#COL] cover for running board suction tray. Location: [#LOC].	$212
3305-0178	One piece vinyl fire retardent cover for top mount pump panel opening. Top of vinyl fire retardent cover outboard corners to have twist locks with velcro around permetier. Color to be [#COL].	$743

3305-0179	(2) piece aluminum hosebed cover. Includes divider-less cross structure, fill tower(s) access door(s) (as applicable), (2) gas shocks, positive hold-opens/hold-closed at rear, (2) grab handles on fwd area of cover with (2) handrails on rear of cover. A landing platform (sized and positioned as required with overall rearend configuration) with embossed diamond plate surface will be centrally located at the upper rear of the apparatus to assist with hosebed cover operations.	$3,529
3305-0180	Vinyl [#COL] hose bed cover with side bungee cords and attached rear flap(s). Includes large pull tabs to ease securing cover while wearing gloves.	$1,173
3305-0181	Vinyl [#COL] hosebed cover with side twist locks with Velcro in between the twist locks and bungee cord attached rear flap(s).	$1,286
3305-0182	Hold open retaining pin for aluminum crosslay (single or bi-fold) cover. Locate as required based off options on module.	$134
3305-0183	Vinyl [#COL] crosslay cover with attached side flaps with bungee cord.	$337
3305-0184	Vinyl [#COL] side covers for diamond plate crosslay cover. Includes large pull tabs to ease securing end flaps while wearing gloves.	$169
3305-0185	Nylon red cargo cover for running board suction tray. Location: [#LOC].	$342
3305-0186	Nylon red cargo net on sides for crosslay cover.	$223
3305-0187	Nylon red cargo net at rear of diamond plate or vinyl hose bed cover.	$531
3305-0188	Nylon black strap with footman loops and Velcro closure to secure hose. Location: [#LOC].	$81
3305-0189	The rear flap(s) of the hosebed cover shall be upgraded to add weight to the bottom of the rear vertical flap(s).	$479
3305-0190	(4) piece aluminum hosebed cover. Includes off center hosebed divider located 8" left of center (NOT CENTERED) with notched rear, fill tower(s) access door(s) (as applicable), (4) gas shocks, positive hold-opens/hold-closed at center and at the rear, (6) grab handles- (4) fwd cover and (2) fwd area of rear cover with (2) handrails on rear cover. Includes center bracing between forward and rearward covers for mounting of gas shocks for rearward covers.	$3,466
3305-0191	Vinyl rear cover for diamond plate hose bed cover using California Type 3 straps IPOS. Color: [#COL].	$366
3305-0193	Hold open device(s) shall be provided. Rubber plunger type hold downs(s) shall hold the aluminum crosslay cover(s) (single or bi-fold) in the open position.	$185
3305-0194	Bi-Fold diamond plate cover for the crosslay area. Includes applicable grab handles, (2) hold downs and magnetic door ajar switch(s). Non-aerial applications to be tagged as a non-stepping surface.	$901
3305-0195	(4) piece aluminum hose bed cover. Includes divider-less cross structure, fill tower(s) access door(s) (as applicable), (2) gas shocks, positive hold-opens/hold-closed at center and at the rear, (6) grab handles- (4) fwd cover and (2) fwd area of rear cover with (2) hand rails on rear cover. A landing platform (10" in depth, the width shall be sized and positioned as required with overall rear end configuration) with embossed diamond plate surface will be centrally located at the upper rear of the apparatus to assist with hose bed cover operations.	$3,802
3305-0196	Diamond plate cover for the dunnage pan area. Includes (2) butterfly latches to hold closed and (1) grab handle mounted between butterfly latches. Hinge to the front of dunnage pan.	$661
3305-0197	Hose bed deflector. The diamond plate deflector shall be bolted in place on the front of hose bed area with an angled top edge to shield rain and wind from the frontal area of the hose bed.	$456
3305-0199	Double diamond plate cover for each outboard hose storage area on the Low Hosebed body. Includes applicable grab handle(s) and (2) hold downs on each cover. Covers to be embossed diamond plate and hinged outboard.	$1,351
3305-0200	Vinyl [#COL] end covers for upper outboard hose storage of the hosebed.	$169
3305-0201	Bi-Fold 1/8" smooth plate cover for the crosslay area. Includes applicable grab handles and (2) hold downs. The cover to be painted black durabak. Non-aerial applications to be tagged as a non-stepping surface.	$950
3305-0202	(4) Piece aluminum smooth plate with black Scorpion coating (IPOS diamond plate) hosebed cover for use with rear mount body. Includes center hosebed divider with notched rear, fill tower(s) access door(s) (as applicable), (2) gas shocks, positive hold-opens/hold-closed at center and at the rear, (6) grab handles- (4) fwd cover and (2) fwd area of rear cover with (2) handrails on rear cover. A landing platform (sized and positioned as required with overall rear end configuration) with aluminum smooth plate with black Scorpion coating (IPOS diamond plate) surface will be centrally located at the upper rear of the apparatus to assist with hosebed cover operations.	$3,447
3305-0203	Nylon black strap with aluminum quick-release buckle for tailboard hose tray(s). Strap to attach to side walls of tray down low as applicable.	$103
3305-0204	(4) piece aluminum hosebed cover for use with rear mount body. Includes center hosebed divider with notched rear, fill tower(s) access door(s) (as applicable), (2) gas shocks, positive hold-opens/hold-closed at center and at the rear, (6) grab handles- (4) fwd cover and (2) fwd area of rear cover with (2) handrails on rear cover. A landing platform (sized and positioned as required with overall rearend configuration) with embossed diamond plate and gator grip surface will be centrally located at the upper rear of the apparatus to assist with hosebed cover operations.	$3,057
3305-0205	Vinyl [#COL] side covers for diamond plate crosslay cover. Covers to attach to the DP cover with snaps. The lower corners shall be secured in place using California type straps (2) each side IPOS. These straps shall function to allow each strap to be looped around the horizontal crosslay roller on each side as part of the attach system.	$343

3305-0206	Vinyl [#COL] hose bed cover using Nitrogen/Oxygen type straps (2) attach positions each side (4) total to secure the rear flap(s) IPOS. The upper straps shall be sewn in place leaving the ratchet clamp approximately half way or mid height of the rear flap(s). The bottom straps shall be fastened to a strap tie down mounted slightly above the horizontal handrail in line with the sewn in straps above (4) total top and (4) total bottom. The bottom straps shall feed directly above to the ratchet clamps (sewn in) as part of the attach/securing system.	$1,466
3305-0207	Vinyl [#COL] hose bed cover with side bungee cords for main hose bed storage area. Seperate cover w/snaps and attached rear flap for hose chute(s). Aerial application only.	$1,074
3305-0208	Cargo net for inside compartment for containing cribbing in compartment when door is opened. Net to permanently fasten on rearward wall just inside door opening and fasten with buckle straps on forward wall just inside door opening. Cargo netting will be 3" x 3" squares. Location: [#LOC].	$738
3305-0209	Smooth plate speedlay cover painted gray durabak. Includes fixed rear portion on rear of module (over backboard storage area, if applicable) and hold-open with grab handles on rearward area.	$744
3305-0210	Diamond plate cover for the dunnage pan area. Includes permanently mounted panel under ladder rack and hinged panel over remaining pan. Includes (2) butterfly latches to hold closed to include gas spring(s) as hold open device. Hinge to the rear of dunnage pan.	$691
3305-0211	(2) piece aluminum hosebed cover. Includes center hosebed divider with NO notched rear, fill tower(s) access door(s) (as applicable), (2) gas shocks, positive hold-opens/hold-closed at rear, (2) grab handles on fwd area of cover with (2) handrails on rear of cover.	$3,298
3305-0212	Vinyl fire retardent [#COL] hosebed cover with twist locks fasteners and bungee cord attached rear flap(s). Cover to be partial hosebed cover leaving hosebed walkway area uncovered. To extend full length of the hosebed from roof top compartment on the side to divider against walkway in the middle and to hosebed storage pan rearward mounting flange at the front.	$1,246
3305-0213	(4) piece aluminum hose bed cover. Includes divider-less cross structure, fill tower(s) access door(s) (as applicable), (2) gas shocks, positive hold-opens/hold-closed at center and at the rear, (6) grab handles- (4) fwd cover and (2) fwd area of rear cover with (2) 18" hand rails on rear cover mounted inboard not to interfere with upper warning lights.	$3,802
3305-0214	Nylon black cargo net at rear of diamond plate or vinyl hose bed cover. Notched for hosebed storage compartment(s) and door(s) as required.	$503
3305-0215	Vinyl [#COL] hose bed cover with attached rear flap(s). Cover to have snaps and velcro along front (NO awning attachment) and velcro along sides. No twist locks.	$772
3310-0017	Auxiliary jack pad 24X24 (PR) with side mounted handle. Includes mounting brackets.	$1,047
3310-0022	Step flop down rear 12" wide rung type (PR).	$867
3310-0039	Cut-out on compartment floor for exhaust and cover plate for hydraulic lines.	$434
3310-0084	All tags on body to be mechanically attached with S/S screws and nuts.	$724
3310-0088	Body module for Snozzle boom.	$6,356
3310-0098	Step fold-down (EA). Location: [#LOC].	$834
3310-0112	Body module for Snozzle boom. Side panels / doors to be smooth painted plate.	$7,466
3310-0121	Body module for 50' Mid-mount boom. 100" wide. Includes left side staircase and provision for aerial control panel.	$6,895
3310-0143	Auxiliary jack pad 24X24 (PR) with handle welded to top surface of pad. Includes mounting brackets.	$1,047
3310-0146	Auxiliary jack pad 24X24 (PR) with side mounted handle. Includes mounting brackets. Driver side mounted below L1, officer below RSBM. Mid mount boom only.	$1,047
3310-0205	Additional "Safe Operating Grade Indicator" gauge shall be provided, gauge is in addition to gauge at rear of body. To be located side facing at rear of body midway up on body panel above corner tailboard. Aerial body only.	$104
3310-0208	Jack leg opening covers smooth plate painted job color (2) sets. Includes outrigger covers and fixed filler panels.	$1,000
3310-0209	Forward jack pad access doors painted outside surface job color and inside surface zolatone gray IPO diamond plate. 95 Mid-mount only.	$389
3310-0215	Transverse compartment floor to be extended out to door opening in L1.	$376
3315-0001	Eagle SideWinder 2-bottle fill station. Fill station to be located in [#LOC].	$13,352
3315-0002	Appleton SpaceSaver 2-bottle fill station. Fill station to be located in [#LOC].	$13,116
3315-0003	Mako MCFS2 2 bottle Fill Station. Fill Station will be located in [#LOC].	$7,142
3315-0005	2-Bottle DOT 6000 PSI Breathing Air Cascade System with air panel, bottle rack and all associated air lines, valves and gauges. Rack and bottles to be located in [#LOC].	$11,348
3315-0006	4-Bottle DOT 6000 PSI breathing air cascade system with air panel, bottle rack and all associated air lines, valves and gauges. Rack and bottles to be located [#LOC].	$15,938
3315-0009	4-Bottle ASME 6000 PSI Breathing Air Cascade System with air panel, bottle rack and all associated air lines, valves and gauges. Rack and botles to be located in [#LOC].	$20,597
3315-0022	Bauer CFS2 two (2) bottle fill station. Fill station to be located in [#LOC].	$13,116
3320-0005	SCBA Bottle Storage. (4) Cast Product SCBA bottle storage with gasketed doors. (2) each side in rear wheel well area.	$668
3320-0006	SCBA Bottle Storage. (3) Cast Product SCBA bottle storage with gasketed doors. (2) officer side and (1) driver side (fwd) in rear wheel well area.	$503
3320-0007	SCBA Bottle Storage. (7) E-ONE SCBA bottle storage with hinged doors (doors to match wheel well material) with push button latches. (4) officer side and (3) driver side in wheel well area.	$1,071

3320-0008	SCBA Bottle Storage. (8) E-ONE SCBA bottle storage with hinged doors (doors to match wheel well material) with push button latches. (4) officer side and (4) driver side in wheel well area.	$1,277
3320-0011	SCBA Bottle Storage. (11) E-ONE SCBA bottle storage with hinged doors (doors to match wheel well material) with push button latches. (6) officer side and (5) driver side in wheel well area- (3) FWD and (2) RWD.	$1,439
3320-0012	SCBA bottle storage. (7) E-ONE SCBA bottle storage with hinged stainless steel doors with push-button latches. (4) officer side and (3) driver side in wheel well area.	$1,169
3320-0014	SCBA Bottle Storage. (6) E-ONE SCBA bottle storage with hinged doors (doors to match wheel well material) with push button latches. (3) officer side and (3) driver side in wheel well area for use with dual tank fills.	$1,045
3320-0015	SCBA Bottle Storage. (2) Cast Product SCBA bottle storage with gasketed doors. Located driver side rear wheel well area.	$668
3320-0016	SCBA Bottle Storage. (7) E-ONE SCBA bottle storage with hinged doors with push button latches. (4) officer side and (3) driver side in wheel well area. Rear driver side to have Cast Product SCBA bottle storage with gasketed door.	$1,071
3320-0017	SCBA Bottle Storage. (4) Cast Product SCBA bottle storage with gasketed doors. (2) each side in rear wheel well area. Recessed fuel fill to be protected behind the rear driver side SCBA door.	$1,198
3320-0018	SCBA Bottle Storage. (8) Fire Shopp SCBA bottle storage with hinged doors with push button latches. (4) officer side and (4) driver side in wheel well area.	$1,559
3320-0019	SCBA Bottle Storage. (7) Fire Shopp SCBA bottle storage with hinged doors with push button latches. (4) officer side and (3) driver side in wheel well area.	$1,306
3320-0020	SCBA Bottle Storage. (4) Fire Shopp SCBA bottle storage with hinged doors with push button latches. (2) officer side and (2) driver side in wheel well area.	$1,135
3320-0021	SCBA/Wheel Chock Storage. (2) Cast Product SCBA bottle storage with gasketed doors on driver side in wheel well area. (2) wheel chock storage compartments with hinged doors and push button latches located on officer side in wheel well area. (2) wheel chocks to be stored per compartment. Does not include wheel chocks. Storage doors to match wheel well material.	$2,647
3320-0022	SCBA Bottle Storage. (7) E-ONE SCBA bottle storage with hinged doors (doors to match wheel well material) with push button latches. (3) officer side and (4) driver side in wheel well area.	$1,071
3320-0024	SCBA Bottle Storage. (7) E-ONE SCBA bottle storage with hinged stainless steel doors with push button latches. (4) officer side and (3) driver side in wheel well area.	$1,414
3320-0028	Vision Mark tag for officer side rearward SCBA bottle storage. Tag to have red letters on white background. Tag to read "Extinguishers".	$38
3320-0030	SCBA Bottle Storage. (8) E-ONE SCBA bottle storage with hinged stainless steel doors with push button latches. (4) officer side and (4) driver side in wheel well area.	$856
3320-0031	Zico bottle rack for large bottles. Locate in [#LOC]. Each unit will have straps to hold the bottle in and all top units will have a flat top. Each unit will be bolted together and be [#COL] PVC coated.	$123
3320-0032	Zico Bottle rack for small bottles. Locate in [#LOC]. Each unit will have straps to hold the bottle in, an angle floor to hold bottle in place, and all top units will have a flat top. Each unit will be bolted together and be [#COL] PVC coated.	$123
3320-0038	SCBA bottle storage. (2) Fire Shopp style SCBA bottle storage with hinged brushed stainless steel doors with push-button latches. (1) officer side and (1) driver side in the rear wheel well area.	$568
3320-0039	SCBA bottle storage. (3) Fire Shopp style SCBA bottle storage with hinged brushed stainless steel doors with push-button latches. (2) officer side and (1) driver side in the rear wheel well area.	$851
3320-0040	SCBA bottle storage. (4) Fire Shopp style SCBA bottle storage with hinged brushed stainless steel doors with push-button latches. (2) officer side and (2) driver side in the rear wheel well area.	$1,135
3320-0041	SCBA Bottle Storage. (4) Cast Product SCBA bottle storage with gasketed doors with locking latches. (2) each side in rear wheel well area.	$748
3320-0043	SCBA/Wheel Chock Storage. (5) E-ONE SCBA bottle storage with hinged doors (doors to match wheel well material) with push button latches. (4) officer side and (1) driver side in wheel well area. (1) wheel chock storage compartment with hinged door and push button latch driver side in forward wheel well area. (2) wheel chocks to be stored per compartment. Does not include wheel chocks.	$1,661
3320-0044	SCBA Bottle Storage. (6) E-ONE SCBA bottle storage with hinged stainless steel doors with push button latches. (3) officer side and (3) driver side in wheel well area. There will (2) bottles forward of the rear axle and (1) rearward.	$761
3320-0045	SCBA Bottle Storage. (7) E-ONE SCBA bottle storage with hinged stainless steel doors with push button latches. (4) officer side and (3) driver side in wheel well area.	$809
3320-0047	SCBA Bottle Storage. (2) Cast Product SCBA bottle storage with gasketed doors. Located officer's side rear wheel well area.	$668
3320-0050	SCBA Bottle Storage. (7) E-ONE SCBA bottle storage with hinged polished stainless steel doors with push button latches. (4) officer side and (3) driver side in wheel well area.	$1,444
3320-0052	Stainless steel trim on bottom edge of each SCBA/Extinguisher compartment opening.	$192
3320-0055	SCBA Storage. (6) Fire Shopp SCBA bottle storage with hinged doors with push button latches. (4) Driver side rear wheel well area and (2) officer side (located either side of the rearward tandem wheel).	$1,700
3320-0058	SCBA Bottle Storage. (2) Fire Shopp SCBA bottle storage with hinged doors with push button latches. Located centered in officer side wheel well area.	$568

3320-0062	SCBA/Wheel Chock Storage. (1) E-ONE SCBA bottle storage with hinged door (door to match wheel well material) with push button latches. (1) driver side in wheel well area. (3) wheel chock storage compartment with hinged door and push button latch, (1) driver side in forward wheel well area and (2) officer side in forward and rearward wheel well area. (2) wheel chocks to be stored per compartment. Does not include wheel chocks.	$2,434
3320-0065	SCBA Bottle Storage. (6) Fire Shopp SCBA bottle storage with hinged doors with push button latches. (3) officer side and (3) driver side in wheel well area.	$1,220
3320-0066	Zico Bottle rack for large bottles. Locate in roll-out tray in B1 (vertically mounted) 3 wide x 3 deep. Each unit will have straps to hold the bottle in and all top units will have a flat top. Each unit will be bolted together and be Black PVC coated.	$120
3320-0067	SCBA Bottle Storage. (5) Cast Product SCBA bottle storage with gasketed doors. (3) officer side - (2) over forward axle and (1) at rear of wheel well area. (2) driver side (over forward axle) in rear wheel well area.	$836
3320-0069	PAC Cylinder Mate. Locate in [#LOC]. Each unit will be black in color and have a strap to hold the bottle in.	$213
3320-0070	Each SCBA storage area to include a ribbed rubber insert mounted to rear of storage area.	$78
3320-0071	SCBA bottle storage for 5.25" diameter high pressure cylinders. (3) dually style SCBA bottle compartments with hinged brushed stainless steel doors and push-button latches for total storage of 6 bottles. (2) officer side and (1) driver side in the rear fender panels.	$1,045
3320-0074	SCBA Bottle Storage. (16) E-ONE SCBA bottle storage with hinged doors (doors to match wheel well material) with push button latches and one aluminum tray for each bottle. (8) officer side and (8) driver side in wheel well area.	$2,009
3320-0076	SCBA Bottle Storage. (2) Cast Product SCBA bottle storage with gasketed doors. Located (1) driver's side forward wheel well area, (1) officer's side rear wheel well area.	$668
3320-0079	SCBA Bottle Storage. (7) Fire Shopp SCBA bottle storage with hinged doors with push button latches (wired to door ajar). (4) officer side and (3) driver side in wheel well area.	$1,760
3320-0080	SCBA Bottle Storage. (2) Fire Shopp SCBA bottle storage with hinged doors with push button latches. Located centered in driver side wheel well area.	$568
3320-0081	Vision Mark tags (2) for driver side wheel well area SCBA bottle storage. Tags to have red letters on white background. (1) Tag forward inboard tube to read "WATER EXTINGUISHER". (1) Tag rearward inboard tube to read "DRY CHEM".	$94
3320-0084	Extinguishers label to be mounted on the Officer's side rear SCBA bottle storage door IPOS.	$36
3320-0085	SCBA bottle storage for 5.25" diameter high pressure cylinders. (4) dually style SCBA bottle compartments with hinged brushed stainless steel doors and push-button latches for total storage of 7 bottles. (2) officer side and (2) driver side in the rear wheel well area. Left side rear door covers the fuel pocket and has single bottle SCBA storage.	$1,331
3325-0000	E-ONE designed PTO driven HRT system, 10,500 PSI, with 3 tool capability.	$36,483
3325-0001	E-ONE designed PTO driven HRT system, 10,500 PSI system, with 4 tool capability.	$43,716
3325-0003	E-ONE designed PTO driven HRT system, 10,500 PSI system, with 2 tool capability.	$29,250
3325-0004	XRT Hydraulic tool system with 2 tool capability. 10,500 PSI system. Includes selector vlv for each reel, hyd res / filter and remote cooler. Requires gen with XRT hyd pump.	$23,553
3325-0005	E-One designed PTO driven HRT system. 5,000 PSI system with 3 tool capability.	$36,483
3325-0009	XRT Hydraulic tool system with 3 tool capability. 5,000 PSI system. Includes selector vlv for each reel, hyd res / filter and remote cooler. Requires gen with XRT hyd pump.	$26,438
3325-0010	XRT Hydraulic tool system with 2 tool capability. 5,000 PSI system. Includes selector vlv for each reel, hyd res / filter and remote cooler. Requires gen with XRT hyd pump.	$23,553
3330-0001	Slide-out platform, integral driver side running board (includes hand rail as applicable).	$1,261
3330-0002	Slide-out platform, rollerless. Includes chrome grab handle centered on the front face of the platform (includes hand rail as applicable). Located [#LOC].	$1,220
3330-0007	Folding Step. Location [#LOC]. Each location requires a minimum of (1) handrail per NFPA.	$117
3330-0008	Handrail 12". Location [#LOC].	$103
3330-0012	Intermediate pump panel step officer side with forward tapered corner. Includes step lighting (as applicable). Step light to be switched thru work light in cab.	$627
3330-0013	Platform with 500lbs. slides. Locate [#LOC]. Platform sized as required per location and includes handrail (as applicable for body mounted locations).	$822
3330-0020	Intermediate pump panel step driver and officer side with forward tapered corner. Includes step lighting (as applicable). Step lights to be switched through work light in cab.	$1,206
3330-0023	Slideout platform-integral officer side running board. Not available with a front suction (includes handrail as applicable).	$1,261
3330-0025	Steps rear. Includes folding steps on officer side (staggered stepped as applicable with tailboard depth) for additional hosebed access and handrail mounted on officer side upper hosebed side (as applicable).	$338
3330-0026	(3) Cast Product steps. Mount to driver side of B1. To include lighting under each step and driver side upper hose bed hand rail.	$313
3330-0028	Rear driver side cast products steps with intermediate step. Includes step lighting with cast product steps.	$884

3330-0031	Intermediate pump module step officer side with forward and rearward tapered corners. Locate just below the crosslay floor. Includes step lighting (as applicable). Step light to be switched thru work light in cab.	$411
3330-0033	Intermediate pump module step driver side. Locate just below the crosslay floor. Includes step lighting (as applicable). Step light to be switched thru work light in cab.	$290
3330-0034	Recessed folding step box. Driver side rear. To include all steps as applicable.	$232
3330-0035	Recessed folding step box. Officer side rear. To include all steps as applicable.	$232
3330-0036	(5) Folding Steps. Located on the officer and driver side behind rear doors of cab. Handrail to be mounted on upper portion of cab for access to the crosslays	$1,211
3330-0037	Intermediate pump panel step driver side directly below crosslays (full width). Includes (2) lower folding steps with (1) loop handrail towards rear. Includes step lighting (as applicable). Step light to be switched thru work light in cab.	$1,024
3330-0038	Upper hosebed handrail. Locate to rear most area of hosebed with same stanchions as rear tailboard handrails. Handrail not to be in the hosebed.	$217
3330-0041	Steps Rear NFPA. Includes diamond plate corner steps on driver and officer side for NFPA hosebed access and handrail mounted on driver and officer side upper hosebed side (as applicable)	$220
3330-0042	Hansen white LED body hand rails upgrade package.	$1,223
3330-0043	Full width handrail to be mounted just below hosebed. Handrail to run from beavertail to beavertail. Includes (2) pass-through stanchions equally spaced. This handrail is in place of standard handrail.	$323
3330-0044	Step rear intermediate. Includes steps for NFPA hosebed access and handrail on upper hosebed side on driver side. Locate: (1) large corner step each side below intermediate step and (1) small corner step each side above intermediate step. Includes handrail mounted on officer upper hosebed side.	$666
3330-0045	Handrail to be mounted just below hosebed to be thru bolted. Includes (2) pass-through stanchions equally spaced. This 48" handrail is in place of standard 48" handrail.	$464
3330-0046	Folding Step Package. Steps include LED integral lights. Locate (3) each front compartment face and (2) each side rear. Includes applicable handrails as required.	$1,942
3330-0047	(2) Folding Steps. Located on the officer and driver side behind rear doors of cab. Rear cab handrails will be used for steps.	$654
3330-0048	Handrails above compartments over 96" (Pair). To be mounted on top of body.	$323
3330-0049	Handrails full length of hosebed cover door. Total of (4) handrails. Location (1) handrail on inboard side of each hosebed cover door.	$1,018
3330-0050	Intermediate pump panel step driver side with forward tapered corner. Includes step lighting (as applicable). Step light to be switched thru work light in cab.	$627
3330-0052	Slideout platform-rollerless low profile style located [#LOC]. Includes (1) hand rail (mounted as applicable).	$818
3330-0053	Folding Step. Location [#LOC]. Step include integral lights. Each location requires a minimum of (1) handrail per NFPA.	$137
3330-0055	Steps rear. Steps include integral lights. Includes folding steps on officer side (staggered stepped as applicable with tailboard depth) for additional hosebed access and handrail mounted on officer side upper hosebed side (as applicable).	$410
3330-0056	Intermediate pump panel step officer side with forward and rearward tapered corners. Includes step lighting (as applicable). Step lights to be switched thru work light in cab.	$783
3330-0057	Handrails to be mounted just below hosebed to be thru bolted. Handrails to have offset stanchions. These (2) appropriately sized handrails are in place of standard 48" handrail.	$464
3330-0058	Intermediate pump panel step driver side with forward and rearward tapered corners. Includes step lighting (as applicable). Step lights to be switched thru work light in cab.	$783
3330-0061	Handrail to be mounted on the rear of the hosebed. Handrail to use offset stanchions and be mounted downward. This is in place of standard below the hosebed handrail.	$165
3330-0062	Step rear intermediate. Intermediate rear step to be embossed diamond plate. Includes folding steps on driver side for NFPA hosebed access and handrail mounted on driver side upper hosebed side (as applicable).	$514
3330-0063	Steps rear. Includes diamond plate gator grip corner steps on officer side for hosebed access and handrail mounted on officer side upper hosebed side (as applicable).	$425
3330-0064	Hosebed Access Ladder. Aluminum extruded ladder with diamond plate gator grip steps located on driver side inboard of beavertail. Requires removal of gator grip on tailboard below step for mounting puroses.	$1,200
3330-0065	Zico access ladder. Location: [#LOC]. Includes required step lights.	$1,568
3330-0067	Compartment (interior) mounted manually operated fold-out step/platform with gator grip surface. Includes a mechanical hold close located in the compartment and (1) vertically mounted handrail mounted along one side of the compartment exterior. Step/platform will reduce compartment interior mounted items overall width and/or depth. Locate: [#LOC].	$914
3330-0069	Spacer bracket for platform mounting. Bracket to lower platform to approx. 12" from ground (measured to bottom of platform). Locate: [#LOC].	$240
3330-0070	Steps rear driver and officer (Montreal). Includes folding steps on driver and officer side with steps mounted as far rearward on the beavertail (not staggered) as applicable. Steps located (top of tailboard to top of step(down) flat surface) lowest (11"), middle (24.5") and top (39.5").	$390

3330-0071	Step rear intermediate above B2.	$658
3330-0072	Hansen red LED body handrails upgrade package.	$1,223
3330-0073	Step rear intermediate. Locate above B1, includes handrail (in place of horizontal hosebed handrail).	$514
3330-0074	Access ladder. Aluminum extruded ladder with ribbed aluminum extrusion steps located on officer side of pump module offset to the rear. Rear rail to loop up and over to aid in access into/out of dunnage storage pan.	$1,475
3330-0075	Slideout platform - SlideMaster. Location: [#LOC].	$1,610
3330-0076	Pool style hand rail. Includes and approx. 16" loop over the body. Location: driver side staircase; forward hand rail.	$233
3330-0077	Intermediate pump panel step officer without taper. Includes step lighting (as applicable). Step light to be switched thru work light in cab.	$662
3330-0078	Handrail pool stlye. Locate on rear of beavertail and rear upper body corner. In place of standard 48" beavertail and 10" upper rear body handrails.	$404
3330-0079	Slide-out platform, rollerless. Includes chrome grab handle centered on the front face of the platform (includes hand rail as applicable for body mounted locations) and required step lighting. Located [#LOC].	$822
3330-0080	Intermediate pump panel step driver side located rearward of the crosslays. Includes step lighting (as applicable). Step lights to be switched thru work light in cab.	$783
3330-0081	(5) Folding Steps. Located on the driver side behind rear doors of cab w/ diamond plate paint guard. Handrail to be mounted on upper portion of cab for access to dunnage area.	$714
3330-0082	Handrail 36". Location: driver side vertically mounted on forward corner extrusion of pump module..	$308
3330-0083	Handrail 18". Location: (1) on top of forward staircase module 3x3 extrusion, (1) on officer side lip of staircase storage pan and (1) on top of officer side compartment top offset to front.	$462
3330-0085	Ladder, aluminum access rear of body with extruded and ribbed extrusion sides and steps. The outboard vertical extrusion is to extend full height and over the rear upper body for an additional gripping surface when accessing the upper body/hosebed area. Locate to the [#LOC]	$535
3330-0087	Aluminum access ladder with extruded and ribbed extrusion sides and steps. Note that ladder width may vary with position of pump intake/discharge locations. Locate to the [#LOC]	$1,069
3330-0089	Intermediate pump panel step driver and officer side without taper. Includes step lighting (as applicable). Step light to be switched thru work light in cab. Mounting feet to be reverse mounted due to vertically hinged panel.	$1,206
3330-0090	Handrail on pump module to be full length as possible. Location: [#LOC].	$103
3330-0093	Ladder access, aluminum extruded ladder with ribbed aluminum extrusion steps located on the rear offset to the officer side. Includes required step lights.	$1,485
3330-0094	A pair of 12" handrails shall be supplied. Locate 1 each side outboard of ladder on roof.	$206
3330-0095	Intermediate pump panel step driver and officer side located rearward of the backboard storage. Includes step lighting (as applicable). Step lights to be switched thru work light in cab.	$783
3330-0096	Steps rear package. Includes (2) diamond plate gator grip corner steps - (1) up high and (1) down low and (1) folding step between the corner steps on the driver and officer sides for hosebed access. Includes handrails mounted vertically on driver and officer side rear upper hosebed sides (as applicable).	$425
3330-0097	Handrail 36". Location: (1) each side on driver and officer side pump module up high.	$464
3330-0098	Handrail 12". Location outboard driver and officer side rear hosebed side.	$103
3330-0099	Step rear intermediate. Intermediate rear step to be located just below the upper rear body compartment.	$514
3330-0100	Step below body. Located below [#LOC]. Each location requires a minimum of (1) handrail / handhold per NFPA.	$313
3330-0101	Intermediate pump panel step for rear pump panel.	$349
3330-0104	Dual lighted LED folding steps rear NFPA. Includes folding steps on officer side (staggered stepped as applicable with tailboard depth) for additional hosebed access and handrail mounted on officer side upper hosebed side (as applicable).	$362
3330-0105	Dual lighted LED folding step. Location: [#LOC]. Each location requires a minimum of (1) handrail per NFPA.	$111
3330-0106	Step rear intermediate. Intermediate rear step to be located just below the upper ladder storage compartment.	$514
3330-0107	All body and pump module (if applicable) hand rails to use Austin Hardware model GR-002-AL-BRT-144 knurled bright anodized aluminum tubes IPOS.	$272
3330-0118	Steps rear. Steps include integral LED lights. Includes (6) folding steps - (3) on driver side and (3) on officer side (staggered stepped as applicable with tailboard depth) for additional hosebed access and handrail mounted on driver and officer side upper hosebed side (as applicable).	$607
3330-0123	Rear landing platform located above the B1 compartment. Landing platform to be used for hose loading operations and will be embossed diamond plate.	$514
3330-0124	Access ladder. Aluminum extruded ladder with ribbed aluminum extrusion steps located on the rear offset to the driver side. Includes required step lights.	$1,485
3330-0125	Slideout platform-integral driver side running board (includes handrail as applicable). The platform step to be smooth plate with gator grip painted black durabak.	$1,515

3330-0126	Slideout platform-rollerless. Includes chrome grab handle centered on the frt face of the platform (includes handrail as applicable). Located below officer side pump panel. The platform step to be smooth plate with gator grip painted black durabak	$1,475
3330-0127	Handrail 36". Location: (1) each side on driver and officer side pump module forward extrusion vertically mounted.	$464
3330-0129	Auto Kwikee step. Location: [#LOC].	$748
3330-0133	Access ladder. Aluminum extruded ladder with ribbed aluminum extrusion steps located on the rear offset to the driver side. Includes required step lights.	$1,485
3330-0134	Step rear intermediate. Locate above rear traffic advisor, includes handrail (in place of horizontal hosebed handrail).	$514
3330-0135	Handrail on top pump module to be full length as possible. Location: Driver and officer side pump module.	$191
3330-0136	The rear body vertical hand rails extended to top of body.	$111
3330-0137	The side upper rear body handrails extended to rear of body.	$111
3330-0139	Step below side intake / discharge panel (PR). Embossed dia plt with steel supports. Each location requires a minimum of (1) handrail / handhold per NFPA. eMAX only.	$1,225
3330-0152	Handrail 36". Location offset to driver side of body headboard forward of the water tank fill tower(s).	$206
3330-0155	Step rear intermediate. Locate above B1.	$514
3330-0156	Step rear intermediate. Intermediate rear step to be located above the thru the tank storage tunnel.	$514
3330-0158	Step below side intake / discharge panel (PR). Gator grip diamond plate. Each location requires a minimum of (1) handrail / handhold per NFPA. eMAX only.	$937
3330-0159	Step rear intermediate. Intermediate rear step to be located above the rear Newton dump.	$514
3330-0160	Handrail 12". Location inboard driver side rear hosebed side angled.	$103
3330-0161	Handrail 12" with angled stanchions. Location: outboard on driver side compartment top 8" off front compartment face.	$103
3330-0165	Handrail 24". Location [#LOC].	$186
3330-0166	Handrail 12". Locations to be determined at pre-construction meeting.	$103
3330-0167	Intermediate rear step to be approximately 10" deep located above the rear Newton dump valve, and be of embossed aluminum treadplate.	$514
3330-0168	Slide-out platform, rollerless. Includes chrome grab handle centered on the front face of the platform (includes hand rail as applicable). Located under right side pump running board.	$1,220
3330-0170	Slideout platform-roller-less. Includes chrome grab handle and retaining pin, centered on the front face of the platform (includes handrail as applicable for body mounted locations) and required step lighting. Located: [#LOC].	$822
3330-0171	Steps rear NFPA compliant. Includes diamond plate corner steps on driver and officer side rear of body for NFPA hose bed access. Includes hand rails mounted on driver and officer side rear trailing panel and upper rear body panel (as applicable).	$370
3330-0173	Step bolt on, 19.9" X 8" gator grip stepping surface shall be mounted [#LOC].	$283
3330-0174	Slideout platform-rollerless. Includes chrome grab handle centered on the front face of the platform (includes hand rail as applicable). The platform step to be smooth plate with gator grip painted black durabak. Located [#LOC].	$1,464
3330-0175	Intermediate pump panel step driver side above operator's panel. Includes (2) loop handrails, (1) forward, (1) rearward. Includes step lighting (as applicable). Step light to be switched thru work light in cab.	$1,120
3330-0177	Intermediate pump panel step constructed of 3/16" (.187") aluminum smooth plate with black Scorpion coating (IPOS diamond plate) for rear pump panel.	$478
3330-0179	Step below side intake / discharge panel (PR). Bustin Tread and diamond plate. Each location requires a minimum of (1) hand rail / hand hold per NFPA. SM SS eMAX only.	$937
3330-0182	Step rear intermediate embossed treadplate. Locate above B1, includes handrail (in place of horizontal hosebed handrail).	$514
3330-0183	Step rear intermediate. Locate above B1, includes handrail (in place of horizontal hosebed handrail). Step construction shall be aluminum smooth plate IPO diamond plate painted Black Scorpion (rough finish).	$726
3330-0184	Step rear intermediate. Locate above B2, includes handrail (in place of horizontal hosebed handrail).	$514
3330-0185	Step below side intake / discharge panel (PR). Gator grip plate constructed of 1/8" (.125") aluminum smooth plate with black Scorpion coating (rough finish) IPOS diamond plate. Each location requires a minimum of (1) handrail / handhold per NFPA. eMAX only.	$1,190
3340-0003	Cast Products recessed fuel fill with door.	$118
3340-0004	Hosebed above the booster tank. Includes forward hosebed and tower(s) cover plate work (as applicable). Hosebed adjustable divider extrusion rearward of the furthest tower is to run full width of the hosebed (as is practical with other hosebed mounted equipment).	$1,501
3340-0005	Step rear intermediate. Includes folding steps on driver side for NFPA hosebed access and handrail mounted on driver side upper hosebed side (as applicable).	$514
3340-0015	Diamond plate single axle wheel well. Includes bolt-on composite wheel well liners and aluminum trim fenderettes.	$1,033

3340-0021	Compartment Heaters installed in [#LOC].	$440
3340-0026	Diamond plate overlay front body. For Stainless Steel product only. To include the entire front body panels. Do not wrap to the door opening.	$380
3340-0027	Diamond plate corner guards for the driver and officer front compartment face. Guards to wrap around the corner and be full height of side assembly or to a max of 96".	$192
3340-0028	Stainless Steel corner guards for the driver and officer front compartment face. Guards to wrap around the corner and be full height of side assembly.	$244
3340-0034	The hinged door(s) of [#LOC] to have door louvers for additional ventalation.	$148
3340-0035	Divider Long. To run full length of hose bed (front to rear).	$456
3340-0036	Body compartment interiors to have a swirled finish. Includes pan of hinged door as applicable.	$1,945
3340-0041	Removable number plate with mounting brackets. Locate [#LOC]. Plate to be painted job color. Lettering and/or graphics not included.	$251
3340-0045	(2) driver side roof top compartments. Includes hinged raised compartment lids with turn latches and grab handle(s). Each lid to have (1) bracket mounted LED light and to be wired to door ajar indicator in cab.	$2,339
3340-0049	Hosebed storage pan. Locate in forward area of hosebed.	$685
3340-0051	Reinforce flooring of compartment [#LOC] for storage of heavy equipment.	$298
3340-0052	Stainless steel trim on bottom edge of compartment opening of [#LOC].	$113
3340-0055	Cast Products recessed fuel fills with doors for dual fuel fill application.	$408
3340-0059	Recessed Fuel fills for dual fuel fill application. (1) each side in wheel well.	$231
3340-0060	Diamond plate corner guards for the driver and officer rear compartment face. Guards to wrap around the corner and be full height of side assembly or to a max of 96".	$218
3340-0061	The walls of compartment [#LOC] to have additional louvers for additional ventilation.	$75
3340-0062	Divider medium. To run full length of hose bed (front to rear) behind single fill tower.	$409
3340-0063	Divider short. To run full length of hose bed (front to rear) behind dual fill towers or single set back fill tower.	$343
3340-0067	Turtle Tile Brand [#COL] Floor Matting covering all applicable Compartment Floors, Shelves, and Rollout Trays.	$988
3340-0068	Mud flaps, rear, black with Saulsbury logo.	$150
3340-0074	Body mainframe and hosebed side assemblies for a 85" high body.	$1,084
3340-0075	Body mainframe and hosebed side assemblies for a 90" high body.	$2,164
3340-0076	(2) officer side roof top compartments. Includes hinged raised compartment lids with turn latches and grab handle(s). Each lid to have (1) bracket mounted LED light and to be wired to door ajar indicator in cab.	$2,339
3340-0077	Body compartment Interiors to have Zolatone gray finish. To include pan of hinged doors (as applicable). Does not include floors if they are dia plt.	$4,868
3340-0078	Body compartment Interiors and compartment mounted components (shelves, trays, toolboards,etc.) to have Zolatone gray finish. To include pan of hinged doors, and tool compartments (as applicable). Does not include floors if they are dia plt.	$10,328
3340-0080	Bolt-on diamond plate 18" tailboard (full width of body). Includes (2) squared off beavertails (no stanchions) with removable outer panels and handrails- (2) vertically on trailing edge of body and horizontally mounted handrail(s) below hosebed.	$864
3340-0081	Bolt-on diamond plate tailboard (full width of body). Includes handrails- (2) vertically on trailing edge of body and horizontally mounted handrail(s) below hosebed.	$1,153
3340-0082	Bolt-on diamond plate tailboard (full width of hosebed). Includes handrails- (2) vertically on trailing edge of body and horizontally mounted handrail(s) below hosebed.	$650
3340-0083	Bolt-on diamond plate tailboard (full width of rear compartment). Includes the enhanced extended side compartment frame work with diamond plate compartment tops, (1) officer side lower area folding step. Driver side includes (1) upper hosebed mounted handrail (as applicable) and handrails- (2) vertically on trailing edge of body and horizontally mounted handrail(s) below hosebed.	$771
3340-0088	Smooth plate single axle wheel well painted job color. Includes bolt-on composite wheel well liners.	$1,498
3340-0089	Turtle Tile Brand [#COL] Floor Matting covering all applicable Compartment Floors, Shelves, and Rollout Trays.	$1,593
3340-0090	Turtle Tile Brand [#COL] Floor Matting covering all applicable Compartment Floors, Shelves, and Rollout Trays.	$2,170
3340-0093	Mud flaps, rear, black with E-ONE logo.	$149
3340-0094	Body mainframe and hosebed side assemblies for a 95" high body.	$3,248
3340-0095	(2) officer side roof top compartments with extra width to inboard side. Includes hinged raised compartment lids with turn latches, grab handle(s) and gas shock hold open and drain line(s) ran to below body. Each lid to have (1) bracket mounted LED light and to be wired to door ajar indicator in cab.	$4,675
3340-0096	(2) driver side roof top compartments with extra width to inboard side. Includes hinged raised compartment lids with turn latches, grab handle(s) and gas shock hold open and drain line(s) ran to below body. Each lid to have (1) bracket mounted LED light and to be wired to door ajar indicator in cab.	$4,675

3340-0097	Brushed Stainless Steel single axle wheel wells. Includes bolt-on composite wheel well liners and fenderettes.	$1,137
3340-0098	Stainless Steel single axle wheel wells. Includes job color paint, bolt-on composite wheel well liners and fenderettes.	$1,415
3340-0099	Diamond plate overlay rear body. For Stainless Steel product only. To include the entire rear body panels. Do not wrap to the door opening.	$312
3340-0102	Angled (Boston style) style tailboard corners.	$411
3340-0107	Diamond plate tandem axle wheel well. Includes bolt-on composite wheel well liners and fenderettes.	$2,063
3340-0109	Power vent system located in [#LOC]. Includes timer and is run from shorepower inlet.	$179
3340-0111	Horizontal ladder bracket. Location and type of ladder: [#LOC].	$238
3340-0113	Adjustable ladder brackets. Mount in adjustable tracks on officer side.	$436
3340-0114	Hosebed above the booster tank and side body compartments. Includes forward hosebed and tower(s) cover plate work (as applicable) and extended width side to side (over side compartments) for increased hosebed capacity.	$2,875
3340-0115	Bolt-on diamond plate 16" tailboard (full width of body). Includes (2) squared off beavertails (no stanchions) with removable outer panels and handrails- (2) vertically on trailing edge of body and horizontally mounted handrail(s) below hosebed.	$808
3340-0116	Bolt-on diamond plate 14" tailboard (full width of body). Includes (2) squared off beavertails (no stanchions) with removable outer panels and handrails- (2) vertically on trailing edge of body and horizontally mounted handrail(s) below hosebed.	$752
3340-0117	Bolt-on diamond plate 12" tailboard (full width of body). Includes (2) squared off beavertails (no stanchions) with removable outer panels and handrails- (2) vertically on trailing edge of body and horizontally mounted handrail(s) below hosebed.	$697
3340-0118	Bolt-on diamond plate 10" tailboard (full width of body). Includes (2) squared off beavertails (no stanchions) with removable outer panels and handrails- (2) vertically on trailing edge of body and horizontally mounted handrail(s) below hosebed.	$639
3340-0119	Speedy dry hopper. Locate [#LOC]. Includes discharge chute in compartment directly below roof top compartment with close off valve and extension hose for ground level dispensing. Capacity of speedy dry hopper is 200 lbs.	$1,453
3340-0121	Full length driver side tunnel. Reduces driver side upper compartment depths to 12" deep IPO 26". Tunnel includes access door at rear.	$1,309
3340-0122	Half length driver side tunnel. Reduces driver side upper compartment depths of L2 and L3 to 12" deep IPO 26".	$817
3340-0124	Upgrade runningboards to 3/16" diamond plate.	$86
3340-0125	Recess mounting for directional light bar. Located on rear area of body.	$368
3340-0126	Diamond plate single axle wheel well. Includes fenderettes and bolt-on stainless steel wheel well liners.	$2,643
3340-0127	Body mainframe and hosebed side assemblies for a 77" high body.	$651
3340-0128	Bolt-in partition walls. Locate in lower rear compartment transverse area. Partitions to separate the side rear compartments from the rear compartment.	$216
3340-0131	Diamond plate hose storage box. Locate on driver side compartment top. Hosebed side to be the inside edge of box for maximum storage. Use .090 overlay on hosebed side to protect paint and rear 3x3 extrusion. Box to include a 3" radius rear corner, removable slat flooring and a cargo net top and rear.	$682
3340-0132	Diamond plate single axle wheel well. Includes fenderettes and bolt-on aluminum wheel well liners painted job color.	$2,063
3340-0133	Officer side beavertail to have recess box (9"w x 14"H x depth of beavertail). Box to be mounted low flush with top of tailboard.	$380
3340-0135	Body mainframe and hosebed side assemblies for a 73" high body.	$1,516
3340-0136	Bolt-on diamond plate 20" tailboard (full width of body). Includes (2) squared off beavertails (no stanchions) with removable outer panels and (3) 48" handrails- (2) vertically on beavertails and (1) horizontally below hosebed.	$921
3340-0137	Body mainframe and hosebed side assemblies for a 92" high body.	$2,597
3340-0139	Bolt-on diamond plate 18" tailboard (full width of body). Includes (2) slanted beavertails (no stanchions) with removable outer panels and handrails- (2) vertically on trailing edge of body and horizontally mounted handrail(s) below hosebed.	$1,080
3340-0140	Hosebed above the booster tank. Includes forward hosebed and tower(s) cover plate work (as applicable). Adjustable track rearward of the fill tower(s) to run full width of the hosebed area.	$1,680
3340-0141	Label package for Memphis units only, to include labeling of removable panels to indicate what is behind.	$90
3340-0142	Crosslay roller 18". Mount driver side front compartment face just below compartment top.	$138
3340-0143	Interior ladder tunnel door. Locate in B1 inline with ladder tunnel thru tank. Hinge to officer side with D-Ring latch and driver side to be notched for cord reel.	$392
3340-0144	Stainless Steel floor overlay. B1/R1 full width.	$255
3340-0145	Rubrail for the body and pump area module(s).	$695
3340-0146	Stainless steel rubrail for the body and pump area module(s).	$1,386

3340-0147	Louver Guards. All lower body compartment louvers to have protective guard provided on exterior of compartments. Guards to prevent road spray from entering compartments.	$494
3340-0148	Body and Cab logos (exterior large and small logos) to be mounted at final inspection.	$695
3340-0149	Transverse Module (full width). Locate forward of pump area. Includes a single compartment opening per side (with a shallow lower area and a transverse upper area with diamond plate flooring) and upper area for single stacked double crosslay with backboard storage.	$3,664
3340-0150	Dri-Dek brand [#COL] floor matting covering all applicable compartment floors, shelves, and rollout trays.	$921
3340-0151	Dri-Dek Brand [#COL] floor matting covering all applicable body compartment floors, shelves, and rollout trays.	$1,527
3340-0152	Dri-Dek brand [#COL] floor matting covering all applicable compartment floors, shelves, and rollout trays.	$2,104
3340-0153	Hosebed storage pan diamond plate lids (2) lids. Officer side lid to run just under the ladder rack in the stored position. The driver side to be as large as possible with remaining space. Each hinged to rear of pan. Includes (1) gas shock hold open and push-button latches. Included in the pan are vertical "L" shaped partion walls located next to inboard side of fill towers. Seal partitions to keep water from entering from the outboard psoition.	$646
3340-0154	Mud flaps, rear, black with no logo.	$149
3340-0158	Underbody splash guard behind rear axle mounted to body.	$487
3340-0165	Bracket pac trac jumbolok p/n 1070 PT. To hold (2) pike poles (1) 6ft and (1) 10ft. To be located on officer side compartment top.	$250
3340-0166	Bolt-in partition wall. Locate in [#LOC].	$201
3340-0168	Poly box to be located on the lowest mounting surface of [#LOC].	$297
3340-0173	Backboard storage box. Located in the officer side of the hosebed (full length). Includes vertically hinged door (wired to door ajar) w/push-button latch and composite flooring. Box to hold: (2) backboards. The box to have an open area (top access) to the rear of the backboards in remaining hosebed area.	$465
3340-0176	Swirl plate single axle wheel well with clear coat finish. Includes bolt-on composite wheel well liners.	$1,589
3340-0180	Brushed stainless steel overlay front body. For Stainless Steel product only. To include the entire front body panels. Do not wrap to the door opening.	$567
3340-0181	Each lid to have (1) additional bracket mounted light. This is in addition to light that comes standard for total of (2) lights per compartment.	$140
3340-0182	Brushed stainless steel single axle wheel well. Includes bolt-on stainless steel wheel well liners and fenderettes.	$2,270
3340-0184	Diamond plate box for directional lightbar and (2) GH scene lights. Box to be mounted on 3" x 3" aluminum angle at rear of hosebed storage pan. Lights to be surface mounted to box.	$520
3340-0185	Hosebed divider(s) to be notched for hosebed preconnects. Notch to be large enough for divider(s) to be adjustable over preconnects.	$138
3340-0186	Recessed storage compartment located between driver side upper and lower compartments. Compartment to hold dealer supplied and installed back up tether and plug.	$376
3340-0187	Sign "Stay Back 150 Metres" with black reflective lettering. Locate below rear of body.	$122
3340-0190	Diamond Plate Hosebed Storage Pan Cover. Includes (1) D-ring latch and gas shock(s). Hinge to the rear of the hosebed storage pan. Cover to open to 90 degrees.	$957
3340-0191	Divider Support to run full width of hosebed (side to side) at the front of the hosebed and towards the rear of the hosebed at top of the divider(s). Attach to each hosebed divider to provide additional support.	$311
3340-0192	Storage box ceiling mounted in transverse of L3/R3.	$411
3340-0193	Pumper Body, Pump Module and Cab Tags in French to replace standard English E-One supplied Tags.	$1,403
3340-0194	Bolt-on diamond plate tailboard (full width of rear compartment) for use with low hosebed. Includes driver side (1) upper hosebed mounted handrail (as applicable), handrail(s) mounted horizontally below hosebed and (2) handrails mounted vertically on trailing edge of body.	$771
3340-0197	The following compartments to be full height and full depth L1, L2, R1.	$820
3340-0198	Rear diamond plate vertically hinged door on driver side roof top compartments. Includes thumb latch and wiring for door ajar switch.	$166
3340-0199	Hosebed storage box for 17' Little Giant Ladder to be vertically stored. Includes vertically hinged door (wired to door ajar) with push-button latch. Located in driver side of hosebed.	$814
3340-0200	Removable slat flooring. Location: [#LOC]	$248
3340-0207	Piping cover to be located in compartment [#LOC]. Includes compartment wall cut-outs for piping.	$418
3340-0210	Brushed stainless steel overlay rear body. For Stainless Steel product only. To include the entire rear body panels. Do not wrap to the door opening.	$567
3340-0211	Painted smooth plate overlay rear body. For Stainless Steel product only. To include the entire rear body panels. Do not wrap to the door opening.	$1,749
3340-0212	Diamond plate access door in dunnage pan for access to plumbing in pump module. Includes push button latches.	$305
3340-0213	L shaped partition located in hosebed to protect the fill towers.	$321
3340-0214	Smooth plate outboard beavertail panels (PR) with stanchions. Painted job color.	$487

3340-0215	Divider Long. To run full length of hosebed (front to rear). Divider height to half of hosbed depth (top to bottom). For use with low hosebed configurations only.	$456
3340-0216	Body mainframe and upper body/hosebed side assemblies for a 90" high body.	$598
3340-0217	The upper outboard panels of the speedlay module, the wheel well and the rear end upper/lower rearward facing panels to smooth plate overlays. These area are to be seamless and painted job color.	$3,912
3340-0218	Sign "Stay Back 500FT". White plate with red reflective lettering. Locate low on rear of body / body doors.	$122
3340-0219	Body and hosebed storage pan pump access panel package. Includes removable access panels in upper forward area of L1/R1 and a large removable access panel in floor of the hosebed storage pan.	$541
3340-0220	Body compartment Interiors to have Zolatone black finish. To include pan of hinged doors (as applicable). Does not include floors if they are dia plt.	$4,868
3340-0221	Body compartment Interiors and compartment mounted components (shelves, trays, toolboards,etc.) to have Zolatone black finish. To include pan of hinged doors (as applicable). Does not include floors if they are dia plt.	$10,328
3340-0223	Stainless Steel corner guards for the driver and officer rear compartment face. Guards to wrap around the corner and be the height of the top of the tail lights.	$232
3340-0224	(1) officer side rear pump module extra width (inboard side) roof top compartment (offset rearward and sized to accommodate electric reel). Includes hinged raised compartment lid with push-button latches and grab handle(s). Compartment to have (1) bracket mounted LED light and wired to door ajar indicator in cab. Forward area to be open for general location of deck gun (open to walkway area). Outboard side of body to run full width and wrap around the rear and meet with the end of the hosebed walkway end (rearward facing plate work to match rear of body as applicable).	$2,044
3340-0225	Stair case module (full width of body). Includes large compartment area with lower storage area and upper area dunnage pan. Stair case located to [#LOC].	$7,995
3340-0227	Divider Long. To be split for rear mount hosebed application. Main body hosebed divider to be squared on both ends. Rear hosebed divider to have radius end.	$682
3340-0228	Storage area for misc. equipment located above the upper speedlay compartment on driver side rear. Includes divider with (2) 6' pike pole with D-Handle and two small shovels (remaining space with pike poles high-approx. 5' foot deep). Includes smooth plate door with push button latch.	$1,932
3340-0229	Speedy Dry Hopper. Locate [#LOC]. Includes discharge chute in compartment directly below roof top compartment with close off valve and extension hose for ground level dispensing. Capacity of speedy hopper is 50 lbs.	$1,089
3340-0230	(4) Removable aluminum trays for the rear preconnects. The (2) driver and (1) officer upper trays to hold 200' of 1.75" DJ hose. The (1) officer lower tray to hold 150' of 3" DJ hose (tray will be longer front to rear for capacity). Each tray is removable from the rear of the body and include handhold cut outs on each side (4 total) and (2) handrails mounted side to side and placed 13" back from tray edge.	$1,463
3340-0231	Nylon black cargo net(s) in interior compartment opening(s) behind lift-up doors of [#LOC]. Cargo net(s) to be held in place at top between two (2) pieces of flat bar, through-bolted. Cargo net(s) to be held in place at bottom with twist-locks outboard and snaps inboard. Two (2) velcro straps to be installed (1) on rear of flat bar and (1) cargo net to hold cargo net in place for comparment access.	$618
3340-0232	Directional Lightbar Box. Located on rear area of body between upper rear hosebed side tubes. Box to be diamond plate.	$531
3340-0233	Speedy Dry Hopper. Locate roof top compartment above R3. Includes discharge chute in compartment directly below roof top compartment with close off valve and extension hose for ground level dispensing. Capacity of speedy hopper is 68 lbs.	$1,136
3340-0234	Divider Long. To run full length of hosebed (front to rear). Rear of divider to have cut at 45 degree angle and hand hold cutout at 45 degree angle.	$456
3340-0235	Rubrail for the body and pump area module(s). Rubrail for rear of tailboard not included.	$695
3340-0236	Center hose bed walkway. Non-slip diamond plate walkway to run full length of hose bed.	$1,275
3340-0237	Speedy Dry Hopper. Locate dunnage pan on officer side. Locate control on officer side pump panel, plumbing to terminate approx. 20" above runningboard. Includes 2.5" Akron ball valve to control plow and provide cap. Includes snubber valve control of air to assist feed of speedy dry and a trash screen to in top of hopper. Capacity of speedy hopper is 200 lbs.	$2,663
3340-0240	Hydraulic hose cover. Removable cover located in the dunnage pan to protect hydraulic hose from damage.	$267
3340-0241	Rear diamond plate vertically hinged door on officer side roof top compartments. Includes thumb latch and wiring for door ajar switch.	$166
3340-0242	Diamond plate storage box with hinged lid w/push button latches. Located in hosebed storage pan to be approx. 36"W x 60"L x 18"H.	$1,517
3340-0243	Hose storage tray located on officer side compartment top. Tray to be full length of compartment top and have drainage slots on bottom of tray. Includes cargo net cover.	$1,617
3340-0244	Locking push button latches to match body compartment door locks. Locate (2) on ladder storage door, (1) on each backboard storage door (if applicable), (1) on microphone box (if applicable), (1) on each pike pole door (if applicable) and (1) on each SCBA bottle storage door.	$57

3340-0245	Nylon black cargo net(s) over exterior compartment opening(s) [#LOC]. Cargo net to be held in place with twist-locks.	$503
3340-0247	Hosebed storage pan partition. Partition to be located forward of generator and water/foam fill towers.	$290
3340-0248	Hosebed Storage Pan. Locate in forward area of hosebed. Extra width front to back for equipment, generator and fill tower storage.	$1,369
3340-0251	Half length driver side tunnel. Reduces driver side upper compartment depths of L2 and L3 to 12" deep IPO 26". Includes cut-out in hosebed side wall in forward area of L2. Cut-out to forward of Little Gaint sleeve. Includes cover plate with push button latches.	$1,875
3340-0252	Bolt-in floor R2. Floor is in addition to the existing DP floor. Floor to have 2" raised forward area (tapered towards rear for securing cribbing) and run full length front to rear.	$204
3340-0253	Backboard storage compartment. Locate in officer side ladder tunnel. Rack to be approx 2" wide.	$382
3340-0255	Hosebed storage pan partition. Partition to seperate the booster reel from rest of pan.	$290
3340-0258	A deflector shield will be placed in front of the light tower or A/C system. Deflector will be in front of the forward most component.	$861
3340-0259	(1) officer side transverse module extra width (inboard side) roof top compartment. Includes hinged raised compartment lid with turn latches and grab handle(s). Compartment to have (1) bracket mounted LED light and wired to door ajar indicator in cab.	$2,044
3340-0260	Transverse module (full width and height of body) with lower storage areas and frame width transverse floor (compartment opening 48" wide and same height as main body compartments). Includes open front storage pan to driver side (same depth as staircase storage pan), transverse (front to rear) walkway area (inline with staircase and main body).	$5,589
3340-0261	Stair case module (full width of body). Includes large compartment area with lower storage area and upper area open back storage pan. Stair case located to [#LOC].	$7,995
3340-0262	(1) transverse storage pan roof top type compartment. Locate to inboard side (access from walkway). Compartment top and walls (diamond plate) to be bolt-in type and spaced to allow required air-flow for generator. Lid to be raised with push button latches (like roof top compartment lids) with gas shock hold open and includes one bracket mounted LED light.	$1,941
3340-0264	License plate sized number plate. Locate in license plate bracket(s). Plate to be painted job color. Lettering and/or graphics not included.	$195
3340-0265	Diamond plate fill tower deflector. Locate around fill tower located in hosebed storage pan. To be four sided and bolt-in for removing and to be height of pan.	$305
3340-0268	(1) staircase module storage pan roof top type compartment. Locate to inboard side (access from walkway). Compartment top and walls (diamond plate) to be bolt-in type. Lid to be raised with push button latch (like roof top compartment lids) with gas shock hold open and includes one bracket mounted LED light.	$953
3340-0271	Nylon black cargo net in interior compartment opening behind door(s) of [#LOC]. Cargo net to be mechanically attached to bottom of compartment opening and bungee cords in the top corners.	$503
3340-0272	Sign "Stay Back 500FT" with black reflective lettering. Locate B1 door above D-ring.	$122
3340-0276	Hosebed divider(s) to be notched. Notch(es) to be 24" wide x 24" high at the upper front corner of the divider(s).	$240
3340-0279	Hosebed above the booster tank. Includes forward hosebed with notch for boom support, deflector for boom support and tower(s) cover plate work. Hosebed adjustable divider extrusion rearward of the furthest tower is to run full width of the hosebed.	$1,501
3340-0280	Divider Long. To run full length of hosebed (front to rear). Locate on top of hard suction storage in hosebed.	$456
3340-0284	The hosebed divider(s) to be notched on the rearward end for nozzle(s).	$240
3340-0285	Bolt-in partition wall. Locate in centered (front to back) in driver side roof top compartment.	$299
3340-0290	Full width partition(s) located in hosebed rearward of the fill tower(s).	$491
3340-0291	Removable number plate with mounting brackets. Locate [#LOC]. Plate to be painted job color. Plate to be 8"W x 20"H. Lettering and/or graphics not included.	$355
3340-0292	Smooth plate single axle wheel well painted job color. Includes bolt-on composite wheel well liners. Wheel well plate(s) to be flush mounted.	$3,466
3340-0293	Crosswalk and Speedlay module compartment Interiors to have Zolatone gray finish. Does not include floors if they are dia plt.	$654
3340-0294	Recessed fuel fill officer side wheel well.	$272
3340-0295	(1) driver side rear pump module extra width (inboard side) roof top compartment (offset rearward and sized to allow deck gun to stow without interfering with hosebed area). Includes hinged raised compartment lid with turn latches and grab handle(s). Compartment to have (1) bracket mounted LED light and wired to door ajar indicator in cab. Outboard side of body to run full width and wrap around the rear and meet with the end of the hosebed.	$2,044
3340-0296	(1) driver side transverse module extra width (inboard side) roof top compartment (offset rearward). Includes hinged raised compartment lid with turn latches and grab handle(s). Compartment to have (1) bracket mounted LED light and wired to door ajar indicator in cab. Forward area to be open for general location of items in forward transverse pan.	$2,044

3340-0297	(1) officer side transverse module extra width (inboard side) roof top compartment (offset rearward). Includes hinged raised compartment lid with turn latches and grab handle(s). Compartment to have (1) bracket mounted LED light and wired to door ajar indicator in cab. Forward area to be open for general location of items in forward transverse pan.	$2,044
3340-0298	(1) officer side rear pump module extra width (inboard side) roof top compartment. Includes hinged raised compartment lid with turn latches and grab handle(s). Compartment to have (1) bracket mounted LED light and wired to door ajar indicator in cab. Outboard side of body to run full width and wrap around the rear and meet with the end of the hosebed end.	$2,338
3340-0299	Transverse module (full width and height of body) with lower storage areas (compartment opening 67" wide and same height as main body compartments). Includes full width forward storage pan and a pan in the rearward center/officer area between the driver roof top compartment. Transverse floor to run full width. Rear headboard to have area for routing of plumbing for preconnects located in rearward area.	$6,572
3340-0300	(1) officer side rear pump module roof top compartment. Includes hinged raised compartment lid with turn latches and grab handle(s). Compartment to have (1) bracket mounted LED light and wired to door ajar indicator in cab. Outboard side of body to run full width and wrap around the rear and meet with the end of the hosebed end.	$1,169
3340-0301	Special hosebed configuration. First hosebed divider to be 12" off driver side hosebed side, to have fixed shelf centered vertically between hosebed side and hosebed divider, includes (1) long divider centered on top of fixed shelf. Second hosebed divider to be 18.25" off driver side hosebed side, to have fixed shelf centered vertically between first and second hosebed dividers. Both fixed shelves to run full length of dividers.	$1,136
3340-0303	(1) driver side rear pump module roof top compartment. Includes hinged raised compartment lid with turn latches and grab handle(s). Compartment to have (1) bracket mounted LED light and wired to door ajar indicator in cab. Outboard side of body to run full width and wrap around the rear and meet with the end of the hosebed end.	$1,169
3340-0305	Body mainframe and hosebed side assemblies for a 90" high body. Includes modifications for 4x4 and plumbing applications as required.	$2,704
3340-0306	Speedy Dry Hopper. Locate [#LOC]. Includes discharge chute in compartment directly below roof top compartment with close off valve and extension hose for ground level dispensing. Capacity of speedy hopper is 100 lbs.	$1,453
3340-0307	Stop bracket. Bracket to be located approx 125" back from door opening on rear compartment face of the roof top compartment.	$27
3340-0309	Sign "Keep Back 300FT". White plate with red reflective lettering. Locate on rear ladder access door.	$122
3340-0310	Tags Mechanically Fastened. Includes all metal tags/labels on the body and cab.	$376
3340-0311	Two dividers in hosebed storage pan with adjustable tracks to move fore and aft in pan. Each divider to be full height and depth of dunnage area.	$856
3340-0312	(1) driver side rear pump module roof top compartment. Includes hinged raised compartment lid with turn latches and grab handle(s). Compartment to have (1) bracket mounted LED light and wired to door ajar indicator in cab. Outboard side of body to run full width and wrap around the rear and meet with the end of the hosebed end.	$1,169
3340-0313	Locate Foam Fill Tower in the hosebed storage pan. Water Fill Tower located in the hosebed.	$394
3340-0319	Bolt-on diamond plate 10" tailboard (full width of body). For use with rear ladder application. Includes handrails- (1) vertically on trailing edge of body opposite side of ladder and handrail(s) horizontally below hosebed.	$832
3340-0320	Locate Tank Fill Tower(s) in the hosebed area. For use with hosebed storage pan for max storage pan capacity.	$696
3340-0321	Driver side hosebed storage box. Storage box to hold (3) pike poles and (3) backboards. Pike poles to be stored down low. Backboards to be stored up high with dividers seperating storage for each board. Includes vertically hinge hinged door (wired to door ajar) with D-ring latch.	$1,226
3340-0322	Diamond plate deflector shield for Light Tower. Deflector to be mounted to forward area of hosebed storage pan. Includes cross mounting structure in hosebed storage pan for Light Tower mounting.	$1,179
3340-0323	Partitions to seperate the side rear compartments from the rear compartment to be pop riveted into place.	$50
3340-0324	Body mainframe and hosebed side assemblies for a 98" high body.	$3,897
3340-0327	Heat Pan for rear mount pump application. Includes notching for tow eyes and rear hitch receiver (as applicable). Pan to not interfere with the connections of any towing hooks.	$1,952
3340-0330	Transverse module (full width and 95" high) with lower storage areas (compartment opening 40" wide and same height as main body compartments). Includes storage pan inboard of driver side roof top compartment. Transverse floor to run full width. Rear headboard to have area for routing of plumbing for preconnects located in rearward area.	$6,572
3340-0331	Transverse module (full width and 95" high) with lower storage areas (compartment opening 25" wide and same height as main body compartments). Includes upper dunnage pan, transverse floor to run full width. Rear headboard to have area for routing of plumbing for preconnects located in rearward area.	$7,908

3340-0332	Full width hosebed above the booster tank and rear mounted pump. Includes forward hosebed and tower(s) cover plate work (as applicable). Hosebed adjustable divider extrusion rearward of the furthest tower is to run full width of the hosebed.	$2,019
3340-0333	Ribbed extrusion for additional divider support to be welded around the top and rearward edges of hoesbed divider(s).	$325
3340-0334	(2) Removable aluminum trays for the officer rear preconnects. The (1) officer upper tray to hold 200' of 1.75" DJ hose. The (1) officer lower tray to hold 200' of 2.5" DJ hose (both trays sized the same and to take the full R3 interior compartment width). Each tray is removable from the rear of the body and includes handhold cut outs on each side (4 total) and (2) handrails mounted side to side and placed 13" back from tray edge.	$732
3340-0335	Cast Products pass thru with door. There will be a pass thru from the outside of the truck to the inside for wires. Locate [#LOC].	$118
3340-0338	(1) driver side rear pump module extra width (inboard side) roof top compartment. Includes hinged raised compartment lid with turn latches and grab handle(s). Compartment to have (1) bracket mounted LED light and wired to door ajar indicator in cab. Outboard side of body to run full width and wrap around the rear and meet with the end of the hosebed end.	$2,338
3340-0339	(1) driver side transverse module extra width (inboard side) roof top compartment. Includes hinged raised compartment lid with turn latches and grab handle(s). Compartment to have (1) bracket mounted LED light and wired to door ajar indicator in cab.	$2,044
3340-0340	Backboard storage box. Located in [#LOC]. Includes sanded smooth plate exterior with smooth plate interior with (1) velcro strap on each end. Sized to hold (2) backboards.	$462
3340-0341	Diamond plate raised cover with rubber hold-downs. Locate forward area of dunnage pan above transverse compartment. Hinge forward and wire to door ajar incicator in cab. Includes (1) bracket mounted LED light.	$481
3340-0343	Body mainframe and hosebed side assemblies for a 95" high body. Includes height of rear body/pump module.	$1,084
3340-0344	Hosebed above the booster tank and rear pump. Includes forward hosebed and tower(s) cover plate work (as applicable). Hosebed adjustable divider extrusion rearward of the furthest tower is to run full width of the forward hosebed.	$1,501
3340-0345	Hosebed above the booster tank and rear pump. Includes forward hosebed and tower(s) cover plate work (as applicable). Hosebed adjustable divider extrusion rearward of the furthest tower is to run full width of the hosebed.	$1,073
3340-0346	Hosebed above the booster tank and rear pump. Includes forward hosebed and tower(s) cover plate work (as applicable). Hosebed adjustable divider extrusion rearward of the furthest tower is to run full width of the hosebed.	$1,352
3340-0348	Divider Short. To be split for rear mount hosebed application. Main body hosebed divider to be squared on both ends. Rear hosebed divider to have radius end.	$589
3340-0349	Divider Medium. To be split for rear mount hosebed application. Main body hosebed divider to be squared on both ends. Rear hosebed divider to have radius end.	$635
3340-0350	Hosebed Storage Pan (24" front to rear). Locate in forward area of hosebed.	$414
3340-0351	Hosebed Storage Pan (40" front to rear). Locate in forward area of hosebed.	$685
3340-0352	Special hosebed configuration. To have the following dividers: (4) 14" high long dividers, (1) short (1) medium and (2) long standard height dividers and storage for (1) hardsuction with drop down door, with bumpers, wired to door ajar (do not shorten hosebed handrail length). Provide hosebed slats above storage with (1) adjustable divider. Reference layout in file.	$5,139
3340-0354	(1) officer side rear pump module extra width (inboard side) roof top compartment (offset rearward and sized to allow deck gun to stow without interfering with hosebed area). Includes hinged raised compartment lid with turn latches and grab handle(s). Compartment to have (1) bracket mounted LED light and wired to door ajar indicator in cab. Outboard side of body to run full width and wrap around the rear and meet with the end of the hosebed.	$2,044
3340-0355	(1) officer side rear transverse module roof top compartment. Includes hinged raised compartment lid with turn latches and grab handle(s). Compartment to have (1) bracket mounted LED light and wired to door ajar indicator in cab.	$1,169
3340-0356	(1) driver side rear transverse module roof top compartment. Includes hinged raised compartment lid with turn latches and grab handle(s). Compartment to have (1) bracket mounted LED light and wired to door ajar indicator in cab.	$1,169
3340-0357	Body mainframe and hosebed side assemblies for a 85" high body. Includes modifications for 4x4 and plumbing applications as required.	$1,354
3340-0358	Backboard storage sleeve for (1) board. 4"H x 20"W x 76"L. Includes (2) retaining straps, (1) each side for boards. Location: Horizontally mounted through L3/B1/R3.	$628
3340-0359	Backboard storage box. Located in [#LOC]. Includes sanded smooth plate exterior with smooth plate interior with (1) velcro strap on each end. Sized to hold (3) backboards and spaced 3" per space.	$694
3340-0360	Access panel on back wall of compartments L3 and R3 for access to the jet dump and rear tank inlet plumbing.	$246
3340-0362	Black Dri-Deck flooring to be installed on floor of the backboard storage, hosebed storage pan and both medical cabinets.	$1,124
3340-0363	Hosebed Storage Pan. Locate in forward area of hosebed. Pan to be 30" wide.	$882

3340-0364	Diamond Plate Hosebed Storage Pan Cover. Cover to be split due to ladder rack for access when in stowed position. Includes D-ring latches and gas shock(s). Hinge to the rear of the hosebed storage pan.	$1,449
3340-0365	Hosebed deflector divider. Locate to driver side rear of hosebed forward of deck gun. Deflector to only cover the forward and side of the deck gun piping. Rear area fo hosebed to be open for access from driver side rear.	$304
3340-0367	Sign "NO STEP". White vinyl background with red reflective lettering. Locate (1) each forward and rearward on each of the hosebed cover doors.	$122
3340-0370	Body mainframe and hosebed side assemblies for a 80" high body. Includes modifications for 4x4 and plumbing applications as required.	$272
3340-0371	Crosswalk module compartment Interiors to have Zolatone gray finish. Does not include floors if they are dia plt.	$327
3340-0373	The R1 compartment to have smooth plate floor and compartment walls to be non-louvered.	$259
3340-0374	Sign "Stay Back 300FT" with black reflective lettering. Locate below rear of body.	$122
3340-0376	Diamond plate single axle wheel well. Includes fenderettes and bolt-on aluminum wheel well liners sanded finish.	$1,867
3340-0382	Body main frame and hose bed side assemblies for a 78" high pumper body.	$984
3340-0383	Body main frame and hose bed side assemblies for an 83" high pumper body.	$1,084
3340-0384	Body main frame and hose bed side assemblies for an 88" high pumper body.	$2,164
3340-0385	Body main frame and hose bed side assemblies for a 93" high pumper body.	$3,248
3340-0386	Mateflex brand [#COL] floor matting covering all applicable compartment floors, shelves, and roll-out trays.	$1,593
3340-0387	Full width of hose bed stainless steel transverse storage divider. Located in forward area of hose bed to separate equipment items such as a generator, etc. from the main hose storage area. Main hose bed dividers will be located rearward of the transverse divider.	$685
3340-0388	Brushed stainless steel rubrails for the sides of the body below the lower side compartments.	$695
3340-0389	Stainless steel rear fender panels painted job color. (Recommended for FRP paint process compatibility!) Includes bolt-on stainless steel inner wheel well liners (not painted) and polished stainless steel outer fenderettes.	$1,498
3340-0390	Stainless steel rear fender panels with aluminum treadplate overlays IPO painted finish. Includes bolt-on stainless steel wheel well liners (not painted) and polished stainless steel outer fenderettes.	$1,137
3340-0391	Body mainframe and hosebed side assemblies for a 83" high body.	$1,084
3340-0392	Underbody full width mudflap behind rear axle (as applicable) mounted to body.	$574
3340-0394	Hosebed Storage Pan (36" front to rear). Locate in forward area of hosebed.	$618
3340-0395	Pike pole storage box. Located in the officer side of the hose bed (full length). Includes vertically hinged door (wired to door ajar) w/push-button latch. Box to hold: (4) 10' pike poles.	$1,261
3340-0396	A deflector shield will be placed in front of the light tower or A/C system. Deflector will be in front of the forward most component. Deflector will be painted [#COL].	$1,073
3340-0403	Diamond plate side dump panels. Includes lift-up diamond plate doors with spring loaded hinges.	$414
3340-0404	Smooth plate side dump panels. Includes lift-up smooth plate doors with spring loaded hinges. Smooth plate panels painted job color.	$790
3340-0405	Sign, "STAY BACK 500 FEET" with black reflective lettering. Locate below rear of body.	$122
3340-0406	Sign "Stay Back 150 Metres" with black reflective lettering. Locate below rear of body.	$122
3340-0407	Hosebed above the booster tank. Hosebed assembly to be 3-piece design due to stepped hosebed. Includes forward hosebed and tower(s) cover plate work (as applicable). Hosebed adjustable divider extrusion rearward of the furthest tower is to run full width of the hosebed.	$1,993
3340-0408	Adjustable ladder brackets. Locate in adjustable track [#LOC].	$451
3340-0409	Adjustable tracks (pair). Locate tracks to [#LOC] assembly. For use with ladder and/or hard suction rack(s).	$178
3340-0412	Bolt-on diamond plate 24" tailboard (full width of body). Includes (2) squared off 12" deep beavertails (no stanchions) with removable outer panels and handrails- (2) vertically on trailing edge of body and horizontally mounted handrail(s) below hosebed. For use with swivel style rear tank dump only.	$1,019
3340-0413	Wheel Chocks 44" NFPA Complaint - Pair of Zico SAC-44. Up to 44" diameter Tires. Includes mounting bracket. Locate [#LOC].	$597
3340-0414	Body main frame and 46" wide hose bed for a 90" high rescue pumper body.	$2,164
3340-0415	Body main frame and 46" wide hose bed for a 97" high rescue pumper body.	$3,248
3340-0416	Removable number plate with mounting brackets. Locate driver side outboard of B1. Plate to be painted job color. Plate to be 10"W x 10"H. Lettering and/or graphics not included.	$251
3340-0417	Removable number plate with mounting brackets. Locate driver and officer side of the cab below canopy window. Plate to be painted job color. Plate to be 12"W x 12"H. Lettering and/or graphics not included.	$251
3340-0455	Reinforce compartment [#LOC] for storage of heavy equipment. The compartment to be capable of storing up to 1000lbs of equipment.	$298
3340-0460	Body main frame and hose bed side assemblies for a 78" high body with low hose bed and "L" shaped water tank.	$1,230

3340-0461	Body main frame and hose bed side assemblies for an 83" high body with low hose bed and "L" shaped water tank.	$1,476
3340-0467	Roof top compartment Interiors to have Zolatone gray finish.	$1,759
3340-0470	The outboard panels of the roof top compartments to be smooth plate overlays. These areas are to be seamless and painted job color.	$2,436
3340-0472	Compartment floors to be flush for sweep out.	$573
3340-0476	Stainless steel tandem axle rear fender panels painted job color. Includes bolt-on stainless steel wheel well liners (not painted) and polished stainless steel outer fenderettes.	$1,967
3340-0482	Roof top compartments on driver and officer side to have 1" drain holes with tubing and plugs.	$246
3340-0483	Divider Long. To run full length of hose bed (front to rear). Divider 3/4 height of hose bed depth (top to bottom). For use with low hose bed configurations only.	$456
3340-0484	Body mainframe and hosebed side assemblies for a 92" high body.	$2,164
3340-0485	Body mainframe and hosebed side assemblies for a 95" high body. Includes modifications for 4x4 and plumbing applications as required.	$3,896
3340-0486	Diamond plate single axle wheel well. Includes bolt-on composite wheel well liners and bolt-on polished alum fenderettes.	$937
3340-0488	Divider long for use with hosebed preconnect. Divider to be set back and/or notched at forward area of hosebed for access to preconnect line connection.	$456
3340-0494	Rubrail for the body.	$695
3340-0499	Storage area to officer side of center hosebed divider. Area to include (from driver to officer side): (1) 10" H x 10" W. This includes (1) divider with square ends and hosebed style top. Remaining are to be for horizontally stored backboards (2). Area to be 6" H x remaining hosbed width with a hosebed style top (full length of hosebed).Each storage area to have a drop down diamond plate door with push button latching and each wired to door ajar indicator in cab.	$590
3340-0500	[#LOC] compartment walls are to be non-louvered.	$213
3340-0509	The outboard panels of the roof top compartments to be smooth plate overlays. These areas are to be seamless and painted job color.	$2,436
3340-0511	Bolt-in partition walls. Locate in lower rear compartment transverse area. Partitions to seperate the L3 compartment from the rear compartment.	$109
3340-0512	I-Zone brackets mounted on driver and officer rear body compartment face up high. Includes 14" removable poles with keeper pins.	$210
3340-0514	Compartment R1 to have no louvers. Requires roll-up door application.	$99
3340-0516	Storage Pan Hot Shot II Hydraulic Reservoir.	$685
3340-0519	Removable number plate with mounting brackets. Locate [#LOC]. Plate to be painted job color. Plate to be 12"W x 12"H. Lettering and/or graphics not included.	$261
3340-0520	Smooth plate single axle wheel well painted job color. Includes bolt-on composite wheel well liners and bolt-on polished alum fenderettes.	$1,402
3340-0521	All body and pump module compartments (if applicable) and/or storage areas to have no louvers or vents.	$246
3340-0526	Hose bed storage pan to extend forward over eMAX transverse storage area(s).	$290
3340-0527	2x2 angle to be located full width of opening of compartment L2.	$160
3340-0529	Smooth plate single axle wheel well. Includes bolt-on composite wheel well liners and bolt-on polished alum fenderettes. Panel to be painted job color.	$1,523
3340-0530	Removable number plate with mounting brackets. Locate [#LOC]. Plate to be painted job color. Plate to be 12"W x 8"H. Lettering and/or graphics not included.	$238
3340-0543	Transverse sleeve thru backwall of compartments L1 and R1. Transverse area to be approx. 32" wide x 18" high x 47" deep.	$681
3340-0555	Roof top compartments to have raised push button latches in place of turn latches.	$301
3340-0560	Rolled hose rack for (4) hose rolls. Includes (3) adjustable dividers to be 18" high x 24" deep each with adjustable tracking on floor. Locate in floor of L1 compartment.	$538
3340-0562	Universal air pack bottle bracket installed on backwall of compartment [#LOC].	$138
3340-0576	Mateflex brand [#COL] floor matting covering all applicable compartment floors, shelves, and roll-out trays.	$964
3340-0577	Bolt-in partition wall. Located forward of electric cord reels in driver and officer side roof top compartments.	$201
3340-0578	Bolt-on trim panels to be installed over the side walls extrusions of the driver and officer side roof top compartments.	$760
3340-0579	Provide (2) two inch conduits with pull wires in them for dealer/customer installed equipment. Locate (1) from driver side forward roof top compartment to the hydraulic ports on the front bumper and (1) from driver side forward roof top compartment to the hydraulic ports in the B1 compartment.	$400
3340-0585	Ladder storage box. Located in the driver side of the hosebed. Includes vertically hinged door (wired to door ajar) w/push-button latch and composite flooring. Box to hold: (1) Alco-lite CJL-12 ladder. Deletion of aluminum hose bed cover center divider notch may be required as applicable.	$574
3340-0586	Storage pan over eMAX transverse storage area(s).	$409
3340-0587	Slip-on stainless steel dump elbow and 36" straight extension chute. Includes body mounted removable support arm and mounting brackets at rear of body for elbow and straight chute.	$1,545

3340-0588	Slip-on painted steel dump elbow and 36" straight extension chute. Includes body mounted removable support arm and mounting brackets at rear of body for elbow and straight chute.	$1,193
3340-0589	Body main frame and 46" wide hose bed for a 83" high rescue pumper body. Intended for use with overhead ladder rack and stay under 10' OAH.	$2,164
3340-0591	Hose bed bulkhead divider, stainless.	$508
3340-0597	Handrail to be mounted between stanchion posts. Stanchion post be 6" high and set back 11" from back of body.	$451
3340-0599	Hosebed storage box. Located in the driver side of the hosebed. To hold (2) backboards, (2) 10' pike poles and (1) 10' attic ladder with access from a vertically hinged diamond plate door (wired to door ajar) with a push-button latch.	$1,369
3340-0600	Bolt-in partition walls. Locate in lower rear compartment transverse area. Partitions to seperate the R2 compartment from the rear compartment.	$109
3340-0602	Diamond plate side dump panels. Includes drop-down diamond plate doors with counter balanced actuation.	$607
3340-0603	Removable number plate with mounting brackets. Locate [#LOC]. Plate to be painted lower job color (if cab is painted two tone). Plate to be 8"W x 14"H. Lettering and/or graphics not included.	$261
3340-0605	Removable number plate with mounting brackets. Locate [#LOC]. Plate to be painted upper job color (if cab is painted two tone). Plate to be 14"W x 8"H. Lettering and/or graphics not included.	$261
3340-0614	[#COL] edge trim for floor mounted Turtle Tile matting. Locate on door opening side only. Requires seperate floor matting option.	$347
3340-0615	Pan mounted diamond plate 3 sided generator shield. Includes partition in storage pan for driver side wall.	$861
3340-0616	Tool air system. Includes 6000 PSI DOT cyl, bottle rack, fill panel. Rack located driver side roof top compartment. Fill panel adjacent to breaker box In L1.	$4,365
3340-0617	The following items to be sanded smooth plate painted with black Scorpion coating place of standard diamond plate: Compartment tops, roof top compartment lids, hosebed storage pan, transverse module storage pan, aluminum hosebed covers, tailboard, rear intermediate steps, transverse module running boards.	$2,869
3340-0623	There shall be a compartment below side dumps, it will include a vertically hinged access door (one each side) below the side dumps with push button latch. Doors to match dump panel material. Compartment dims to be approximately 15" high x 24" wide x 26" deep.	$256
3340-0625	Catwalk to be installed above hydraulic generator in hosebed storage pan.	$795
3340-0626	Body mainframe and hosebed side assemblies for a 94" high body.	$3,248
3340-0630	Upper hosebed above the upper section of the booster tank. Includes forward hosebed cover plate work and modifying hosebed storage pan to be 39" wide above upper section of booster tank.	$961
3340-0631	Removable number plate with mounting brackets. Locate [#LOC]. Plate to be painted body job color. Plate to be 8"W x 14"H. Lettering and/or graphics not included.	$261
3340-0632	Body main frame and 59" wide hose bed for a 90" high rescue pumper body.	$2,164
3340-0633	Removable Poly Hose Bed Storage Tray (EA). The floor of the tray(s) to be slotted to prevent the accumulation of water and allow for ventilation of wet hose.	$498
3340-0635	Mud flaps, in front of rear wheels, black with no logo. Install additional row of fasteners close to bottom of wheel well.	$198
3340-0636	Fill Tower support bracket to be held 1/4" back from fill tower and attached to front hosebed wall.	$108
3340-0637	Cover plates around rear frame mounted tow eyes in B1 compartment.	$108
3340-0638	Bolt-in partition wall. Located rearward of air cord reel in officer's side roof top compartment.	$201
3340-0639	Front of hose bed stainless steel partial storage divider on officer side for selected accessory such as a generator. Located in forward area of hose bed to separate the storage area from the main hose storage area. Applicable main hose bed dividers will be located rearward of the partial divider.	$728
3340-0641	Removable number plate with mounting brackets. Locate [#LOC]. Plate to be painted upper cab job color. Plate to be 5.5"H x 11"W. Lettering and/or graphics not included.	$261
3340-0643	Stainless steel trim for lower edge of rear mudflap (PR). The trim shall be 2" in height and go full width of the mudflap. The material shall be "polished" stainless steel and it will be mounted to the lower edge of the rear (back side) of the mudflaps.	$290
3340-0644	Flooring plate additional in L2 and R2 compartments. 3/16" aluminum smooth plate to be bolted in place 1/2" above standard diamond plate compartment floors.	$144
3340-0645	(2) driver side roof top compartments with extra width to inboard side. Includes hinged raised compartment lids ("embossed" treadplate) with turn latches, grab handle(s) and gas shock hold open and drain line(s) ran to below body. Each lid to have (1) bracket mounted LED light and to be wired to door ajar indicator in cab.	$4,724
3340-0646	(2) officer side roof top compartments with extra width to inboard side. Includes hinged raised compartment lids ("embossed" treadplate) with turn latches, grab handle(s) and gas shock hold open and drain line(s) ran to below body. Each lid to have (1) bracket mounted LED light and to be wired to door ajar indicator in cab.	$4,724
3340-0647	Roof top compartment doors shall have larger latches installed (Southco model C5-11-15 latch, C5-82 gasket) in place of standard.	$207

3340-0650	Fill tower partition. "U" shaped partition to be located around water fill tower and extend rearward to bolt to rear surface of storage pan. This 1/8" diamond plate "hat" section shall provide fill tower protection within the hose bed.	$295
3340-0651	Piping cover where visible for discharge piping above pump enclosure to front of hose bed (each). Cover to be stainless steel to blend with surrounding area.	$440
3340-0652	Stainless steel trim for lower edge of front mudflap (PR). The trim shall be 2" in height and go full width of the mudflap. The material shall be "polished" stainless steel and it will be mounted to the lower edge of the rear (back side) of the mudflaps.	$290
3340-0653	Diamond plate tandem axle wheel well. Includes bolt-on composite wheel well liners and bolt-on polished alum fenderettes.	$1,872
3340-0657	Trim between the body front and the cab. One (1) each side to close out the majority of the gap between the body and cab, The trim pieces shall be smooth aluminum plate painted job color and will be bolted in place to the body.	$387
3340-0662	Recessed fuel fill with flat latching stainless steel door. Door style to match SCBA doors.	$252
3340-0664	Backboard storage box. Located in the officer side of the hosebed. To hold (1) backboard with access from a vertically hinged diamond plate door with a lift and turn latch. The box to only run the length of the backboards.	$465
3340-0665	Hosebed storage pan partition. Partition to be adjustable front to back in hosebed storage pan.	$295
3340-0666	Mounting for directional light bar. Located on rear area of body below upper or intermediate step.	$111
3340-0673	Storage box with (2) drop down doors. Diamond plate box to be approx. 136" long x 12" high x 12" deep mounted on officer side compartment top between hosebed side tubes. Includes hinged drop down doors with locking D-ring latches (wire to door ajar).	$869
3340-0675	The outboard panels of the rear body to be smooth plate overlays. These areas are to be seamless and painted job color.	$2,411
3340-0683	Hosebed storage pan. Locate in forward area of hosebed. Pan depth shall be approximately 18".	$966
3340-0695	Soda ash hopper. Locate [#LOC]. Includes discharge chute in compartment directly below roof top compartment with close off valve and extension hose for ground level dispensing. The hopper shall be constructed of all aluminum parts painted Zolatone gray. Plate-work shall be smooth aluminum, holding capacity shall be 200 lbs.	$1,958
3340-0697	Power vent system located in [#LOC]. Wired through receptacle in compartment.	$179
3340-0699	Bolt-on cover plate over upper section of water tank to be embossed diamond plate.	$522
3340-0702	Hosebed storage box. Located in the driver side of the hosebed. To be 76" long X 25" wide X hosebed depth. Box to have diamond plate top with approx. 4" upper. 4" middle and 8" lower storage space. Includes a vertically hinged diamond plate door (wired to door ajar) with a push-button latch.Hinge door to outside.	$1,369
3340-0703	Diamond plate box for directional lightbar and (2) Whelen M6 Linear Super LED scene lights. Box to be mounted on 3" x 3" aluminum angle at rear of hosebed decking. Lights to be surface mounted to box.	$1,203
3340-0707	Upper right side of body to be notched to allow hydraulic overhead ladder rack to be lowered for reduced travel height. Compartment opening height to remain std.	$1,426
3340-0708	The outboard panels of the driver side roof top compartments to be smooth plate overlays. These areas are to be seamless and painted job color.	$1,218
3340-0709	Vertical handrails as mounted the rear body shall extend full height from the bottom of the body to the top of the body IPOS (as practicality permits).	$120
3340-0710	Transverse storage modification affecting L3, B1 and R3 compartments to accommodate a transverse storage area running from L3 to R3 (lower area only). The transverse tunnel area shall be approximately the full depth of the B1 compartment, the compartment opening height shall start approximately 2" above the floor to maximum height available (height may be reduced as required depending upon the rear body storage tunnel foot print). The B1 compartment side walls will be opened (removed) as part of the transverse modifications necessary.	$1,019
3340-0712	Recessed area in storage pan for deck gun to be as low as practical.	$569
3340-0713	Diamond plate deflector shield for Light Tower. Deflector to be mounted on driver side compartment top at front of body. See photos on file.	$368
3340-0714	Bolt-in floor [#LOC]. Floor is in addition to the existing DP floor. Floor to have 2" raised forward area (tapered towards rear for securing cribbing) and run full length front to rear.	$204
3340-0716	Bolt-in SS floor taper [#LOC]. Floor taper is in addition to the existing stainless steel floor. Floor to have 1.5" raised outer area (tapered towards back wall for securing cribbing) and run full length side to side.	$204
3340-0720	Slip-on painted steel dump elbow and 36" straight extension chute. Includes body mounted removable support arm and mounting brackets in compartment [#LOC] for elbow and straight chute.	$1,193
3340-0723	All compartment floors to have Zolatone gray finish. Includes changing floors from diamond plate to smooth plate.	$1,687
3340-0725	Rear vertically hinged door for the officer's side roof top compartment. The door includes thumb latch(s) and wiring for the door ajar switch. The material shall be 1/8" aluminum smooth plate and the hinge shall be placed outboard.	$111

3340-0726	Nylon black cargo net for interior compartment opening of compartment [#LOC]. Cargo net to have custom designed one-piece bar assembly and one step Velcro attachment process with footman loops shall be used opposite the bar end.	$277
3340-0727	Body main frame and hose bed for a 85" high stainless steel eMAX rescue pumper body.	$1,371
3340-0728	Body main frame and hose bed for a 90" high stainless steel eMAX rescue pumper body.	$2,640
3340-0729	Body main frame and hose bed for a 95" high stainless steel eMAX rescue pumper body.	$3,962
3340-0730	Smooth plate corner guards for the driver and officer front and rear compartment faces. Guards to wrap around the corner and be full height of side assembly or to a max of 96". Corner guards to be painted black durabak.	$830
3340-0731	Access panels thru B1 interior officer side and into rear of R4. Service access rear of fill station controls. Access panel to be sized as large as possible to accommodate sevice operations.	$425
3340-0736	Body main frame and hose bed side assemblies for an 83" high body with low hose bed and "L" shaped water tank. No upper rear crossover hand rail.	$1,288
3340-0737	Body mainframe and hosebed side assemblies for a 100" high body.	$4,328
3340-0738	A landing platform (10" in depth, the width shall be sized and positioned as required with overall rear end configuration) with embossed diamond plate surface will be centrally located at the upper rear of the apparatus to assist with hose bed cover operations.	$334
3340-0739	Turtle Tile brand floor matting covering driver and officer roof top compartment floors full length and width. Color: [#COL].	$562
3340-0740	Divider shroud for cab tilt pump, bolt in R1.	$168
3340-0742	Hose bed walkway offset to driver side. Non-slip diamond plate walkway to run full length of hose bed.	$1,275
3340-0743	Backboard Storage sleeve. Located in the officer side hard suction storage compartment. Sleeve to hold (1) backboard, 2"H x 16" W x 73" L. Includes stop bracket approximately 74" back from opening.	$382
3340-0744	Full width hosebed above the booster tank from the driver side extra wide roof top compartments to the officer side with raised side assemblys.	$1,657
3340-0745	Divider Support to run full available width of hosebed (side to side not including hosebed walkway) at the front of the hosebed and at the rear of the hosebed at top of the divider(s) even with the top of the hosebed. Attach to each hosebed divider to provide additional support. Position inboard divider to be utilized as a walkway sidewall and add an aluminum angle bracket along the length of the divider on the hosebed side to facilitate mounting of twist-lock fasteners for the hosebed cover.	$410
3340-0746	CTECH Brand 4 drawer compartment toolbox unit in [#LOC]. Includes Cal Gray drawer face finish with two (2) 8" drawers below and two (2) 3" drawers above to mount in an available compartment opening. Toolbox dimensions to fit in an opening 40.0" W X 23.0" H X 24". Requires a fixed shelf mounted above toolbox enclose top drawer and to create opening height added separately.	$1,818
3340-0747	Compartment heater as high as possible on forward wall. Includes switch on driver overhead. Location: [#LOC].	$1,107
3340-0752	Embossed diamond plate in place of ALL standard and optioned diamond plate on body and modules.	$1,302
3340-0754	Hosebed storage pan constructed of 3/16" (.187") aluminum smooth plate with black Scorpion coating (rough finish) IPOS diamond plate. Locate in forward area of hosebed.	$870
3350-0000	Hydraulic hose reel for use with Hurst brand tools. Includes 100' 1/4" hose (up to 5,000 PSI) and rollers (captive type). Location: [#LOC]. Hose Color: [#COL].	$2,247
3350-0001	Air Reel w/electric rewind. 12V with 100' .25" hose plumbed to the truck air system (unless otherwise specified). Location: [#LOC].	$2,470
3350-0002	Low Pressure Utility Air Hose Reel assembly with 175' low pressure air hose and mini panel. Locate in [#LOC].	$2,247
3350-0004	Low Pressure Utility Air Hose Reel assembly with 250' low pressure air hose and mini panel. Locate in [#LOC].	$2,371
3350-0009	Hydraulic hose reel for use with TNT brand tools. Includes 100' 1/4" hose (up to 10,500 PSI) and rollers (captive type). Location: [#LOC]. Hose Color [#COL].	$4,515
3350-0010	Hydraulic hose reel for use with Phoenix brand tools. Includes 100' 1/4" hose (up to 5,000 PSI) and rollers (captive type). Location: [#LOC]. Hose Color [#COL].	$2,247
3350-0011	Hydraulic hose reel for use with Code 3 brand tools. Includes 100' 1/4" hose (up to 5,000 PSI) and rollers (captive type). Location: [#LOC]. Hose Color [#COL].	$2,247
3350-0012	Hydraulic hose reel for use with Amkus brand tools. Includes 100' 1/4" hose (up to 10,500 PSI) and rollers (captive type). Location: [#LOC]. Hose Color: [#COL].	$4,515
3350-0013	Hydraulic hose reel for use with Hurst Centaur brand tools. Includes 100' 1/4" hose (up to 10,000 PSI) and rollers (captive type). Location: [#LOC]. Hose Color [#COL].	$4,515
3350-0014	Hydraulic hose reel for use with Genesis brand tools. Includes 100' 1/4" hose (up to 10,000 PSI) and rollers (captive type). Location: [#LOC]. Hose Color [#COL].	$4,515
3350-0015	Hydraulic hose reel for use with Holmatro brand tools. Includes 100' 1/4" hose (up to 10,000 PSI) and rollers (captive type). Location: [#LOC]. Hose Color [#COL].	$4,515
3350-0016	12' Lead/Supply Line for high pressure hydraulic reel. To be used with 10,000 PSI hyd reels. Locate on reel in [#LOC].	$768
3350-0017	30' Lead/Supply Line for high pressure hydraulic reel. To be used with 10,500 PSI hyd reels. Locate [#LOC].	$1,142

3350-0018	12' Lead/Supply Line for low pressure hydraulic reel. To be used with 5,000 PSI hyd reels. Locate [#LOC].	$616
3350-0019	30' Lead/Supply Line for low pressure hydraulic reel. To be used with 5,000 PSI hyd reels. Locate [#LOC].	$966
3350-0024	Dual hydraulic reel rollers mounted thru bolt-on bracket. Location(s): [#LOC]	$451
3350-0025	Hydraulic hose reel for use with TNT brand tools. Includes 100' 1/4" synthetic rubber hose (up to 10,500 PSI) and rollers (captive type). Location: [#LOC]. Hose Color [#COL].	$4,515
3350-0026	Hydraulic hose reel for use with Amkus brand tools. Includes 100' 1/4" rubber hose (up to 10,500 PSI) and rollers (captive type). Location: [#LOC]. Hose Color: [#COL].	$4,515
3350-0028	Raceway for 12' Lead/Supply Line between the B1 and L3 compartments.	$313
3350-0029	Route hydraulic lead line(s) to [#LOC].	$90
3350-0030	Low pressure utility air hose reel w/spring rewind. Includes 50' 3/8" low pressure air hose, rollers, ball stop and and shut-off valve accessible from ground. Loc: [#LOC].	$1,244
3350-0032	Akron utility air hose reel. Includes 200' 3/8" hose and reel mounted rollers (captive type). Loc: [#LOC].	$1,321
3350-0033	Akron hydraulic hose reel for use with Hurst brand tools. Includes 100' 1/4" hose (up to 5,000 PSI) and rollers (captive type). Location: [#LOC]. Hose Color: [#COL].	$2,089
3350-0034	Hydraulic hose reel for use with Holmatro Core Technology tools. Reel model EF2220-17-18 w/ 100' of CORE hydraulic hose and a 30' CORE Holmatro pigtail. Location: [#LOC]. Hose Color [#COL].	$7,152
3350-0036	Hydraulic hose reel for use with Hurst Centaur brand tools. Includes 150' 1/4" hose (up to 10,000 PSI) and rollers (captive type). Location [#LOC]. Hose Color [#COL].	$5,498
3350-0040	12' Lead/Supply Line for high pressure hydraulic reel. To be used with 10,500 PSI hyd reels. Locate on reel in [#LOC].	$807
3350-0041	30' Lead/Supply Line for high pressure hydraulic reel. To be used with 10,500 PSI hyd reels. Locate [#LOC].	$1,199
3350-0042	Triple Hose Lead/Supply Line for TNT Reels. (1) 30' Lead/Supply Line for high pressure hydraulic reel. Locate officer side front bumper. Hose Color Blue. (2) 12' Lead/Supply Line for high pressure hydraulic reel. driver forward roof compartment (above L1 forward). Hose Color (1) Red and (1) Yellow. To be used with 10,000 PSI hyd reels.	$3,765
3350-0043	Akron hydraulic hose reel for use with Amkus brand tools. Includes 100' 1/4" hose (up to 10,500 PSI) and rollers (captive type). Location: [#LOC]. Hose Color: [#COL].	$3,223
3350-0045	Akron reel to be powder painted custom color. Requires approval from vendor on color. Location: [#LOC]. Reel Color: [#COL].	$113
3350-0046	8' Lead/Supply Line for high pressure hydraulic reel. To be used with hyrdraulic reels between 10,000 to 10,500 PSI. Locate: [#LOC].	$373
3350-0047	6' Lead/Supply Line for high pressure hydraulic reel. To be used with 10,500 PSI hyd reels. Locate on reel in [#LOC].	$758
3350-0048	Low Pressure Utility Air Hose Reel assembly with 250' low pressure air hose. Locate in [#LOC].	$1,780
3350-0049	Streamline fittings for Hurst reels and tools. This covers 3 hose to lead connections and 6 tool to reel connections.	$3,010
3350-0050	Dual hydraulic reel rewind switch panel. Includes mounting rewind switches towards center of bracket. Location: mounted between B1 hydraulic reels.	$231
3350-0051	Nexus couplings with swivels main reel hose only. Lead-ins to use standard TNT couplers.	$1,043
3350-0052	6' Lead/Supply Line for high pressure hydraulic reel. To be used with 10,000 PSI hyd reels. Locate on reel in [#LOC].	$738
3350-0053	40' Lead/Supply Line for low pressure hydraulic reel. To be used with 5,000 PSI hyd reels. Locate [#LOC].	$1,289
3350-0054	Hydraulic hose reel with Nexus couplings with swivels for use with TNT brand tools. Includes 60' 3/8" hose (up to 10,000 PSI) and rollers (captive type). Location: officer side front bumper. Hose Color: Black/Black with Blue shrink wrap every 10'.	$5,556
3350-0055	Hydraulic hose reel with Nexus couplings with swivels for use with TNT brand tools. Includes 100' 3/8" hose (up to 10,000 PSI) and rollers (captive type). Location: B1 driver side. Hose Color: Black/Black with Red shrink wrap every 10'.	$5,556
3350-0058	Streamline fittings for Hurst reels and tools. This covers hose to lead connections and 2 tool to reel connections.	$1,004
3350-0059	6' Lead/Supply Line for Holmatro Core hydraulic reel. To be used with Holmatro Core hyd reels. Locate on reel in [#LOC].	$945
3350-0060	Hydraulic hose reel for use with Holmatro Core Technology tools. Reel model EF2220-17-18 w/ 100' of CORE hydraulic hose. Location: [#LOC]. Hose Color [#COL].	$5,408
3350-0062	Hydraulic hose reel for use with Hurst brand tools. Includes rollers (captive type). Does not include hydraulic hose. Location: [#LOC].	$1,724
3350-0063	Low Pressure Utility Air Hose Reel assembly with 175' low pressure 1/2" air hose and mini panel. Locate in L2 offset rearward of cord reel, set back 24" from compartment opening with rewind switch located next to the breaker box, locate the air panel in L2 between lower air bag rack and adjustable shelves with protective shield above air panel, run reel plumbing to dunnage area forward of drivers side coffin compartment for the customer installed air compressor.	$2,380
3350-0065	Captive reel rollers for the air reel(s) shall be mounted through a bolt-on bracket. Includes rewind switch which is mounted on side wall. Location(s): [#LOC].	$676

3350-0066	16' Lead/Supply Line for low pressure hydraulic reel. To be used with 5,000 PSI hyd reels. Locate [#LOC].	$652
3350-0068	A lead line #8, 5,000 psi hydraulic hose line routed from IHT manifold to B2 lower rear wall.	$439
3350-0072	A lead line 5,000 psi hydraulic line routed from B2 lower forward wall to dunnage pan located MAS heat exchanger	$627
3350-0073	A return lead line 5,000 psi hydraulic line routed from B2 lower forward wall to dunnage pan located generator	$627
3350-0074	Raceway 8" x 8" (round) for hydraulic hose routing from dunnage area to chassis	$542
3350-0077	Hydraulic hose reel for use with Amkus brand tools. Includes 150' 1/4" hose (up to 10,500 PSI) and rollers (captive type). Location: [#LOC]. Hose Color: [#COL].	$4,741
3350-0078	Hydraulic reels to be mounted in aluminum tray with a cutout for roller assembly. A 1" lip around roller tray assembly to contain any fluids that may leak from hyd reel. Location [#LOC].	$365
3350-0081	Raceway for Air Lines from Driver and Officer Roof Top compartments to rearward L3 compartment for Dealer Supplied and Installed Air Fill System. Locate raceway in ceiling of L3, rearward and as far back as possible.	$542
3350-0082	CMW model 6011 dual hydraulic hose reels for use with 5,000 PSI tools shall be provided and installed. Includes two (2) sets of 100' 1/4" twinline hose (up to 5,000 PSI), hose guides and ball stops. Includes (2) 30' lead/supply lines. Location: in center front bumper tray offset to officer side due to flush mounted Q2B. Hose Color: Reel #1: Green (officer side center), Reel #2: Blue (driver side center).	$6,170
3350-0083	Hydraulic hose reel for use with Amkus brand tools. Includes rollers (captive type). Does not include hydraulic hose. Location: [#LOC].	$1,996
3350-0084	16' Lead/Supply Line for high pressure hydraulic reel. To be used with 10,500 PSI hyd reels, lines are red and black in color. Compatible with Amkus tool brand. Locate on reel in [#LOC].	$945
3350-0085	16' Lead/Supply Line for high pressure hydraulic reel. To be used with 10,500 PSI hyd reels, lines are yellow and black in color. Compatible with Amkus tool brand. Locate on reel in [#LOC].	$945
3350-0088	40' Lead/Supply Line for high pressure hydraulic reel. To be used with 10,500 PSI hyd reels. Locate: [#LOC].	$1,523
3350-0089	CMW model 6011-W3-H1 dual reel, low pressure working air and hydraulic hose reel combo. Includes 100' of 300 PSI blue air hose and 100' of 10,500 PSI red/black hydraulic hose, compatible with Amkus tools. Located on ceiling of compartment B1 offset to officer side.	$5,989
3350-0090	CMW model 6011 dual hydraulic hose reel for use with 10,500 PSI Amkus tools. Reel SHALL NOT be supplied with hose or ball stops. Located on ceiling of compartment B1 offset to driver side.	$4,199
3350-0091	15' Lead/Supply Line for high pressure hydraulic reel. To be used with 10,500 PSI hyd reels. Locate on reel in [#LOC].	$882
3350-0092	Hydraulic hose reel for use with Holmatro brand tools. Includes 60' of Core Technology hose installed (up to 10,000 PSI) and rollers (captive type). Location: [#LOC]. Hose Color: [#COL].	$4,294
3350-0094	8' Lead/Supply Line for Holmatro high pressure hydraulic reel(s). Includes Core Technology hose (up to 10,000 PSI). Locate: [#LOC]. Hose color: [#COL].	$469
3360-0013	Zico access ladder. Includes required step lights.	$1,568
3360-0050	Adjustable compartment dividers shall be installed in each roof compartment. The divider shall span from front to rear and be adjustable left to right. The use of Unistrut or equal materials as required shall provide the adjustability for each divider. The divider plate shall be 3/16" smooth aluminum. Locate (1) divider in each roof top compartment.	$862
3365-0002	Recessed folding ladder storage compartment located [#LOC]. Compartment sized to store a 10' ladder with feet.	$514
3365-0003	Overhead Zico storage rack to have a job color painted door.	$211
3365-0004	(2) pike pole storage tubes. Locate inboard side of rack with pike pole hooks stored in the up position.	$404
3365-0005	Drop Down Fold-A-Tank Rack. Rack to hold [#LOC] gallon portable tank.	$1,428
3365-0010	(3) pike pole storage tubes. Locate inboard side of rack with pike pole hooks stored in the up position.	$606
3365-0011	Floor mounted roll-out tray. Includes 250lbs. tray capacity. Mount on [#LOC] floor.	$607
3365-0012	Recessed folding ladder and pike pole storage compartment located [#LOC]. Compartment sized to store a 10' ladder with feet and (2) pike poles.	$807
3365-0020	Zico electric drop-down ladder rack. Includes spacer brackets with ladder rack controller located on the officer side pump panel.	$4,569
3365-0021	Manually Operated Aluminum Drop Down Ladder Rack. Includes (2) assist lift/lower handles and securing pins (accessable from ground) on each end.Ladder hold downs to secure (1) 2-section extension and (1) roof.	$2,153
3365-0023	Ladder storage thru tank for (1) 2-section 24' extension, (1) 14' roof, (1) 10' attic with feet and (2) pike poles. Reduces selected water tank capacity by approximately 250 gallons for pumpers and 300 gallons for tankers.	$2,599
3365-0024	Ladder storage thru tank for (1) 3-section 35' extension, (1) 14' roof, (1) 10' attic with feet and (2) pike poles. Reduces selected water tank capacity by approximately 250 gallons for pumpers and 300 gallons for tankers.	$2,829
3365-0025	Attic ladder mounting brackets (PR). Locate [#LOC].	$287
3365-0026	Zico pike pole mounting brackets (PR). Locate on top of Zico drop-down ladder rack.	$152

3365-0027	Zico attic ladder mounting brackets (PR). Locate on top of Zico drop-down ladder rack.	$324
3365-0028	Hard Suction Storage Rack. Driver side compartment top. Includes spring hold downs and scuff plates behind spring mounts (as applicable).	$344
3365-0029	Hard suction storage box (pr). Stored (1) each side below "T" of tank. Includes hinged door with push-button latch.	$508
3365-0030	Double hard suction storage rack. Driver side compartment top. Includes spring hold downs with scuff plates (as applicable).	$683
3365-0031	Hard Suction Storage Rack. Officer side in adjustable track above ladders (if applicable). Includes spring hold downs and scuff plates.	$359
3365-0032	Hard Suction Storage Box. Stored below driver side "T" of tank. Includes hinged door with push-button latch.	$255
3365-0033	Recessed pike pole storage compartment located [#LOC]. Compartment sized to store (2) pike poles.	$415
3365-0034	(2) aluminum pike pole storage tubes. Locate [#LOC].	$295
3365-0035	Hard Suction Storage Rack. Officer side compartment top. Includes spring hold downs and scuff plates behind spring mounts (as applicable).	$344
3365-0040	SCBA/Fire Extinguisher storage rack. Locate in [#LOC]. To hold (6) bottles- (2) wide/(3)high. Bottles to be stored angled upward in the compartment. The bottom and sides are to include ribbed rubber inserts.	$467
3365-0041	Hard suction storage box. Located in the officer side hose bed. Includes drop down door (wired to door ajar) w/push-button latch(es), hose bed style top and nylatron flooring (no divider). Box to hold [#LOC] tube(s).	$1,465
3365-0043	Triple Hard Suction Storage Rack. Driver side compartment top. Includes spring hold downs and scuff plates behind spring mounts (as applicable).	$1,025
3365-0046	The driver side full length tunnel to store (2) 6" x 10' hardsuction hoses. Each to be stored individually and accessed by a vertically hinged diamond plate door with a push-button latch. Door to wired to the door ajar indicator in the cab.	$524
3365-0047	The driver side half length tunnel to store (3) backboards. Each to be stored individually with stop bracket 75" back from opening, composite material on floor and accessed by a vertically hinged door at rear with a push-button latch. Door to wired to the door ajar indicator in the cab.	$561
3365-0048	Hard Suction Storage Box. Stored below officer side "T" of tank. Includes hinged door with push-button latch.	$255
3365-0051	Portable Tank Storage Box. Located in the officer side hosebed. Includes drop down door (wired to door ajar) w/push-button latches, hosebed style top and nylatron flooring (no divider). Box to hold [#LOC] gallon portable tank.	$1,465
3365-0052	Over the hosebed ladder rack. Includes framing (with a sanded finish) and mounting points. Ladder storage box to be center mounted with diamond plate front box.	$1,835
3365-0056	Ladder storage thru tank for (2) 6" x 10' hardsuction hoses, (2) pike poles and (1) 10' attic ladder. Provide retaining straps to hold the hardsuctions stationary when stored. Reduces selected water tank capacity by approximately 250 gallons.	$2,916
3365-0057	The driver side full length tunnel to store (3) 6" x 10' hardsuction hoses. Each to be stored individually and accessed by a vertically hinged access door with a push-button latch. Door to wired to the door ajar indicator in the cab.	$785
3365-0058	Recessed pike pole storage compartment located [#LOC]. Compartment sized to store (3) pike poles.	$622
3365-0059	SCBA/Fire Extinguisher storage rack. Locate in [#LOC]. To hold (4) bottles- (2) wide/(2)high. Bottles to be stored angled upward in the compartment. The bottom and sides are to include ribbed rubber inserts.	$313
3365-0060	Ladders to be enclosed in pump compartment. Smooth plate box to enclose ladders in pump area.	$423
3365-0061	Hard Suction Storage Racks. Driver side hose bed side with adjustable tracks. Includes spring hold downs and scuff plates behind spring mounts (as applicable).	$792
3365-0062	Hard Suction Storage Box. Stored below driver side "T" of tank. Includes DP hinged door with push-button latch.	$665
3365-0063	Hard Suction Storage Box. Stored below officer side "T" of tank. Includes DP hinged door with push-button latch.	$665
3365-0065	(4) Hard Suction Storage Racks. Driver side hosebed side with adjustable tracks. Includes spring hold downs and scuff plates behind spring mounts (as applicable)	$1,255
3365-0066	The driver side half length tunnel to store (1) stokes basket and (2) backboards. Each to be stored individually and accessed by a vertically hinged diamond plate door with a push-button latch. Door to wired to the door ajar indicator in the cab.	$561
3365-0070	Recessed folding ladder and pike pole storage compartment located below officer side "T" of the tank. Compartment sized to store a 10' ladder with feet and (2) pike poles.	$1,210
3365-0071	Ladder storage thru tank for (1) 2-section 24' extension, (1) 14' roof, (1) 10' attic with feet and (2) pike poles, (1) 10' with d-handle and (1) 6' with d-handle. Reduces selected water tank capacity by approximately 250 gallons.	$2,858
3365-0072	Door aluminum smooth plate with d-ring latch for thru the tank ladder tunnel. Location: B1 compartment.	$1,053

3365-0073	(4) 6' pike pole storage tubes in the rear transverse compartment ceiling mounted. Locate for compartment L3 access with pike pole hooks stored in the down position. (1) pike pole caution tags to be provided, one each side mounted inside the compartment at the offset.	$969
3365-0074	SCBA/Fire Extinguisher storage rack. Locate in [#LOC]. To hold (6) bottles- (3) wide/(2)high. Bottles to be stored angled upward in the compartment. The bottom and sides are to include ribbed rubber inserts.	$467
3365-0075	Officer side vertical storage tunnel. For use with low hose bed. Tunnel to hold: [#LOC]. Includes vertically hinged rear diamond plate door(s) with push-button latch.	$1,842
3365-0077	(2) pike pole storage tubes. Locate outboard side of rack with pike pole hooks stored in the up position.	$404
3365-0078	(3) pike pole storage tubes. Locate outboard side of rack with pike pole hooks stored in the up position.	$606
3365-0079	2-arm ladder rack on officer side. The ladder rack includes amber lights on each end to visually indicate when the rack is in motion. Restricts the top folding step (if optioned) from closing completely. Includes mounting bracket (if required, matching rear compartment face or compartment wrap finish) for components mounted on rear compartment face.	$13,599
3365-0081	2-Arm Ladder Rack to be painted job color.	$2,727
3365-0083	Zico pike pole mounting brackets (PR). Locate [#LOC].	$152
3365-0085	Zico pike pole mounting brackets with straps (PR). Locate [#LOC].	$168
3365-0088	Double hard suction hose storage tray. Locate on inboard side of overhead ladder rack. Includes (2) securing straps per tray.	$755
3365-0090	Officer side half length vertical storage tunnel. For use with low hosebed. Tunnel to hold: (2) backboards, (1) AEL 12' 2-section ladder, (1) 4' D-handled pike pole, (1) 8' pike pole and (1) 6' pike pole. Includes vertically hinged rear diamond plate door with push-button latch. Pike poles to be located down low in tunnel with backboards and ladder located above.	$1,385
3365-0091	Recessed folding ladder storage compartment located officer side just below hosebed. Compartment sized to store a 10' ladder with feet.	$616
3365-0092	(2) pike pole storage tubes. Locate in driver side roof top compartment with pike pole hooks stored in the up position.	$404
3365-0093	Hard Suction Storage Box to be capable of storing one (1) 6" x 10` hard suction hose. Includes a rear smooth plate access door with push button latch. Door to be wired to door adjar indicator in cab. Located just below hosebed to [#LOC].	$508
3365-0094	Storage tunnel access (contents to be noted). Includes vertically hinged door (to match material of pump access door) with push-button latch(s) and wired to door ajar indicator. Door to [#LOC] of the body/water tank.	$282
3365-0095	Rear mount beside tank storage tunnel contents. Includes brackets capable of securing (1) two section, (1) roof, (1) 10' attic with feet and (2) pike pole tubes.	$2,351
3365-0096	Zico Hydraulic Drop Down Ladder Rack. Includes diamond plate spacer brackets with ladder rack controller located on the officer side pump panel.	$5,966
3365-0097	12' Hard suction hose storage tray. Locate on inboard side of overhead ladder rack. Includes (2) securing straps.	$472
3365-0098	12' Hard Suction Storage Rack. Driver side compartment top. Includes spring hold downs and scuff plates behind spring mounts (as applicable)	$515
3365-0099	SCBA/Fire Extinguisher storage rack. Locate in R1 mounted to lower ceiling below compartment offset. To hold (4) bottles to be stored angled upward in the compartment. The bottom and sides are to include ribbed rubber inserts. Each storage slot to be 11" wide x 11" high.	$1,620
3365-0100	Hard Suction Storage Rack. Officer side compartment top. Includes spring hold downs and scuff plates behind spring mounts (as applicable). Rack to hold 5' hard suction.	$235
3365-0101	Officer side vertical storage tunnel. For use with low hosebed. Lower section of tunnel to hold: 2-Section 24', 14' roof, 10' attic and (2) pike poles. Upper section of tunnel to hold: 2-Section AEL-10 attic ladder and (1) 300' of 1.75" DJ hose. Upper section includes ladder stop 90" back from opening and bolt-in divider between ladder and hose storages. Includes vertically hinged rear diamond plate door(s) with push-button latch(es). The diamond compartment top of tunnel to be hinged for access to dry lay of hose.	$2,933
3365-0102	SCBA/Fire Extinguisher storage rack. Locate in [#LOC]. To hold (4) bottles- (4)wide/(1)high. Bottles to be stored angled upward in the compartment. The bottom and sides are to include ribbed rubber inserts.	$313
3365-0103	SCBA/Fire Extinguisher storage rack. Locate in [#LOC]. To hold (6) bottles- (6)wide/(1)high. Bottles to be stored angled upward in the compartment. The bottom and sides are to include ribbed rubber inserts.	$467
3365-0104	Double hard suction hose storage tray. Locate (1) each side on inboard side of overhead ladder rack(s). Includes (2) securing straps per tray. For use with 13' hard suction hoses.	$2,071
3365-0106	Pike pole pin. Pin to prevent pike poles form vibrating out of stored position.	$134
3365-0107	SCBA/Fire Extinguisher storage rack. Locate in [#LOC]. To hold (12) bottles- (4) wide/(3)high. Bottles to be stored angled upward in the compartment. The bottom and sides are to include ribbed rubber inserts.	$932
3365-0108	10' folding ladder with feet. Locate in officer side roof top compartment.	$616

3365-0109	(4) pike pole storage tubes. Locate inboard side of rack with pike pole hooks stored in the up position.	$806
3365-0110	Recessed pike pole storage compartment located below officer side "T" of the tank. Compartment sized to store (3) pike poles.	$622
3365-0111	Hard suction hose storage tray. Locate on [#LOC]. Includes (2) securing straps. For use with 13' hard suction hoses.	$909
3365-0112	Over the hosebed ladder rack. Includes framing (with a sanded finish) and mounting points. Ladder storage box to be adjustable side to side with diamond plate front box. The ladder storage rack to have locking points of driver side outboard, center and officer side outboard. The framework of the ladder rack to be 9.5" high.	$2,839
3365-0114	Recessed pike pole storage compartment located [#LOC]. Compartment sized to store (3) pike poles. Pike pole box to be 7" deep.	$1,135
3365-0115	Ladder storage thru tank for (1) 2-section 24' extension, (1) 14' roof, (1) 10' attic with feet and (3) pike poles. Reduces selected water tank capacity by approximately 250 gallons.	$2,657
3365-0116	Ladder tunnel to extend to rear of body (over pump/plumbing). Extension to be aluminum and bolt-on for removal for pump maintenance.	$766
3365-0118	(3) pike pole storage tubes. Locate [#LOC].	$443
3365-0120	SCBA/Fire Extinguisher storage rack. Locate in [#LOC]. To hold (12) bottles- (6) wide/(2)high. Bottles to be stored angled upward in the compartment. The bottom and sides are to include ribbed rubber inserts.	$932
3365-0121	Hosebed storage box for (1) scoop stretcher, (3)backboards and (4) pike poles. Scoop stretcher located in lower area of storage with stop located 67" back, backboards located in middle area with stop 74" back, and pike poles located in upper area for (2) 6' and (2) 8' pike poles. Includes vertically hinged door (wired to door ajar) with push-button latches. Located on officer side of hosebed.	$1,465
3365-0122	Officer side vertical storage tunnel. For use with low hosebed. Tunnel to hold: 2-Section 24', 14' roof, 10' attic and (2) pike poles. Upper storage area to have hinged diamonad plate top for storage of misc. items. Includes vertically hinged rear diamond plate door(s) with D-ring latch.	$2,846
3365-0124	Recessed pike pole storage compartment located below officer side compartment top. Compartment sized to store (2) pike poles. Recessed box to be 10" high for Boston Roof Hooks.	$945
3365-0125	Officer side vertical storage tunnel. For use with low hosebed. Tunnel to hold: 2-Section 24', 14' roof, 10' attic, (6) pike poles and (2) 6" x 10' hardsuction hoses (individually vertically stacked). (2) pike poles will be in ladder tunnel and (2) in each hard suction storage. Includes vertically hinged rear diamond plate door(s) with push-button latch.	$2,612
3365-0126	Pike pole tube(s) on overhead ladder rack to be mounted flush with rear of body.	$298
3365-0128	(1) pike pole storage tubes. Locate [#LOC].	$148
3365-0129	Officer side half length vertical storage tunnel. For use with low hosebed. Tunnel to hold: (2) backboards, (1) 4' D-handled pike pole, (1) 8' pike pole and (1) 6' pike pole. Make box for 4' D-handle pike pole 56" long. Includes vertically hinged rear diamond plate door with push-button latch. Pike poles to be located down low in tunnel with backboards located above.	$1,385
3365-0130	Zico Electric Drop Down Fold-A-Tank Rack. Rack to be capable to hold [#LOC] gallon portable tank. Locate on driver side of body. Includes diamond plate cover and mounting hardware.	$8,287
3365-0134	Double Hard Suction Storage Rack. Driver side compartment top. Includes spring hold downs with scuff plates (as applicable). For use with 11' hard suction hoses.	$1,213
3365-0135	Stop bracket set for Zico HLAS ladder rack. Optional bracket for additional ladder rack stability in the up position.	$199
3365-0137	Pike pole. Locate (1) pike pole on officer side compartment top with pike pole hook stored in the up position. Mount with tulip clip(s) for use with D-handle pike pole.	$86
3365-0138	SCBA/Fire Extinguisher storage rack. Locate in [#LOC]. To hold (9) bottles- (3) wide/(3)high. Bottles to be stored angled upward in the compartment. The bottom and sides are to include ribbed rubber inserts.	$701
3365-0140	Stokes Basket Storage Box. Located in the officer side hosebed. Includes Nylon black strap, hosebed style top and nylatron flooring (no divider). Box to hold (1) Junkin JSA-200 stokes basket. Includes stop located 86" back from opening. Vinyl hosebed cover to extend down over this storage.	$1,931
3365-0142	Officer side hosebed storage box to store a (1) 26' 3-section, (1) 12' roof, (1) 10' attic ladder and (3) pike poles. Includes vertically hinged rear diamond plate door with push-button latches.	$2,614
3365-0143	Hard Suction Storage Rack. Locate: [#LOC]. Includes (1) spring hold down and scuff plates behind spring mount (as applicable). Includes diamond plate box with air deflector to hold end of hose in place.	$688
3365-0148	Backboard Storage Box. Located in the driver side hosebed. Includes drop down door (wired to door ajar) w/push-button latch, hosebed style top and composite flooring. Box to hold (1) backboard. Includes stop bracket approximately 74" back from opening. Includes short hosebed divider located on top of storage area.	$1,663

3365-0162	Hard suction racks (one each side) with job color painted box ends (rearward of body only). Racks to be positioned on compartment top so forward coupling end rest flush with end of forward compartment top. Each rack to have (1) spring hold down located as far forward as possible (no hold down at rear). Racks to include extension so rear coupling rest on the rack in the stowed position. Rearward box to be smooth plate and designed to fit around the rack extension. Size box to be 10"x 10"x 10".	$1,802
3365-0163	Hard Suction Storage Box. Located in the [#LOC] hose bed. Includes vertically hinged door (wired to door ajar) w/push-button latches and nylatron flooring. Box to hold (2) 10' hard suction hoses.	$1,465
3365-0164	Backboard Storage Box. Located in the officer side hosebed. Includes drop down door (wired to door ajar) w/push-button latch, hosebed style top and composite flooring. Box to hold (1) backboard. Includes stop bracket approximately 74" back from opening. Includes 45 degree angle plate at rear of the backboard storage.	$1,663
3365-0165	Double hard suction storage rack. Officer side compartment top. Includes spring hold downs with scuff plates (as applicable).	$683
3365-0173	Hard Suction Storage Box. Stored below officer side just below the hosebed. Includes hinged door with push-button latch.	$547
3365-0174	Hold down brackets to secure a (3) section extension, (2) section extension and roof ladder. Requires additional ladder bracket height due to 6 sections of ladders.	$590
3365-0175	Backboard Storage Box. Located in the officer side hose bed. Includes vertically hinged door (wired to door ajar) w/push-button latch, hose bed style top and composite flooring. Box to hold (2) backboards.	$1,663
3365-0176	Hosebed Storage Box. Located in the officer side hosebed. Includes drop down door (wired to door ajar) w/push-button latch(es), hosebed style top and nylatron flooring (no divider). Box to hold (1) stokes basket and (3) backboards. Includes stop bracket approximately 88" back from opening. Stokes basket 86" long x 24" wide x 8" high, backboards will stow inside stokes basket.	$1,663
3365-0177	Hold down brackets to secure a (3) section extension ladder.	$193
3365-0178	Storage box for (1) 8' Dry Wall pike pole. Located in officer side roof top compartment.	$277
3365-0179	Officer side vertical storage tunnel behind reduced upper depth right side compartments. Tunnel to hold: 24' 2-section and 14' roof, plus (2) pike poles and a folding ladder. Includes vertically hinged rear smooth plate door with bent D-ring latch.	$1,842
3365-0180	Backboard storage box located in the driver side of hosebed 9.75" off hosebed side wall. Storage to be 22" wide x 5" high. Includes drop down door (wired to door ajar) w/push-button latch, hosebed style top and composite flooring. Box to hold (2) backboards. Includes stop bracket approximately 74" back from opening. Includes 45 degree angle plate at rear of the backboard storage.	$1,663
3365-0181	Stop bracket to be located approximately 50" back in upper section of driver side of storage tunnel above the hard suction hoses.	$115
3365-0183	Hard suction storage rack. Locate [#LOC]. Includes NFPA retaining strap(s).	$241
3365-0184	Zico electric drop down portable tank rack. Rack located to [#LOC] of body. Rack sized for [#COL] gallon aluminum frame portable tank. The control switching to be located on the side pump panel with the rack being in full view of the operator during operations.	$4,983
3365-0185	Zico overhead ladder rack. Includes electrical relay with cover in compartment adjacent to the storage rack. Locate rack to [#LOC] of body. The control switching to be located at the pump module area with the rack being in full view of the operator during operations.	$5,977
3365-0186	Zico overhead portable tank rack. Includes electrical relay with cover in compartment adjacent to the storage rack. Locate rack to [#LOC] of body. Rack sized for [#COL] gallon aluminum frame portable tank.	$5,977
3365-0187	Zico drop down rack to have diamond plate cover between outboard rack assemblies.	$580
3365-0188	Zico drop down rack to have smooth plate cover between outboard rack assemblies. Cover to be painted job color.	$707
3365-0189	Manual drop-down portable tank storage rack. Includes forward and rearward securing clamps with manual releases. Locate rack to [#LOC] of body. Rack sized for steel framed [#COL] portable tank.	$1,699
3365-0190	Manual drop down rack to have diamond plate cover over the forward, rearward, upper and outboard sides. Includes handrails along the outboard front and rear and (1) on each end mounted on the upper area.	$557
3365-0191	Manual drop down rack to have smooth plate cover over the forward, rearward, upper and outboard sides. Includes handrails along the outboard front and rear and (1) on each end mounted on the upper area. Cover to be painted job color.	$818
3365-0192	Internal aluminum frame portable tank storage with vertically hinged smooth plate door painted job color (wired to door ajar) with D-ring latch. Access door to be located to the rear of the [#LOC] body. Included is a composite material floor overlay and a tank stop for use with a [#COL] aluminum frame portable storage tank.	$677
3365-0193	Portable storage tank thru water tank. To be capable of storing a [#COL] aluminum frame portable storage tank. Storage thru tank will reduce overall gallon capacity of water tank.	$2,009
3365-0194	Double hardsuction storage rack. Locate [#LOC]. Includes NFPA retaining strap(s).	$511
3365-0195	Hard suction hose storage tray. Locate on inboard side of [#LOC] overhead storage rack. Includes (2) NFPA retaining straps.	$380

3365-0196	Ladder storage in hosebed for the following: (1) 2-section extension, (1) roof ladder, (1) attic and (2) pike poles. Extension and roof ladders stored nested. Includes (1) hosebed divider with squared off upper rear, vertically hinged (to swing into hosebed area) door with latch (wired to door ajar indicator) and composite material overlay on hosebed flooring. Upper area open and main hosebed cover to be used to cover top area of ladder storage area. Storage located to [#LOC] of hosebed.	$1,025
3365-0197	Portable storage tank in hosebed for the following: [#COL] gallon aluminum frame tank. Includes (1) hosebed divider with squared off upper rear, vertically hinged (to swing into hosebed area) door with latch (wired to door ajar indicator) and composite material overlay on hosebed flooring. Upper area open and main hosebed cover to be used to cover top area of storage area. Storage located to [#LOC] of hosebed.	$1,025
3365-0198	Storage box for (1) 10' length of hard suction hose. Includes vertically hinged door with latch (wired to door ajar indicator). Locate to [#LOC] below "T" of water tank.	$576
3365-0199	Zico electric drop down ladder rack. Rack located to [#LOC] of body. The control switching to be located on the side pump panel with the rack being in full view of the operator during operations.	$4,983
3365-0202	Hard Suction Storage Rack. Driver side in adjustable track above ladders. Includes spring hold downs and scuff plates.	$359
3365-0203	Zico electric drop-down hard suction rack. Rack located to [#LOC] of body. The control switching to be located on the side pump panel with the rack being in full view of the operator during operations. The rack includes (2) main rack mounted 10' trays.	$4,983
3365-0206	Storage tunnel capable of holding: (1) 2-Section, (1) Roof, (1) Attic, (2) pike poles, (1) backboard storage sleeve between 2-section and roof ladder and (1) 8' block storage with stop above 2-section ladder in Officer Side Storage Tunnel. Includes ladder tunnel door to hinge to officer side of truck.	$689
3365-0208	Horizontal ladder bracket. Location and type of ladder: in officer side of hosebed storage pan to hold Little Giant model 17.	$238
3365-0209	Officer side vertical storage tunnel. For use with low hosebed. Tunnel to hold: 2-Section 24', 14' roof, 10' attic and (2) pike poles. Includes vertically hinged rear diamond plate door with push-button latch. Upper storage area to have an open top and run full legnth of the body. Upper area to have hosebed style flooring.	$2,827
3365-0214	Hard suction storage thru tank for (2) 5" x 15' hard suction hoses. Includes vertically hinged door wired to door ajar with push button latch. Reduces selected water tank capacity by approximately 200 gallons.	$2,599
3365-0217	Officer side vertical storage tunnel. For use with low hosebed. Tunnel to hold: 3-Section 35', 14' roof, 10' attic and (3) pike poles. Pike poles to be stored in upper storage area. Includes vertically hinged rear diamond plate door(s) with push-button latch.	$1,842
3365-0218	Recessed D-handle pike pole storage compartment located below officer side compartment top. Compartment sized to store (2) 6' D-handle pike poles.	$622
3365-0219	Diamond plate storage compartment located on officer side compartment top. Compartment sized to store (1) 10' ladder with feet and (2) 6' D-handle pike poles.	$622
3365-0220	Storage box for (1) 6" x 10' hard suction hose. Includes vertically hinged swing-out door with push-button latch (wired to door ajar). Box to be smooth plate and painted job color. Located [#LOC].	$496
3365-0221	Driver side vertical storage tunnel. For use with low hosebed. Tunnel to hold: 2-Section 24', 14' roof, 10' attic and (2) pike poles. Includes vertically hinged rear diamond plate door(s) with push-button latch.	$1,842
3365-0222	Upper hosebed storage area above driver side compartments and officer side ladder tunnel. Upper storage areas to have an open top and run length of the hosebed area. Includes hosebed style flooring.	$1,794
3365-0223	Hard Suction Storage Rack. Officer side on compartment top. Rack to be 118" in length and be held back 9" from the front of the compartment top. Includes spring hold downs and scuff plates.	$359
3365-0226	Hosebed ladder storage box with diamond plate top. Located centered in hosebed and to secure from driver to officer: (1) 10' attic w/feet (in a box) w/(2) 10' pike pole tubes mounted on top, (1) PRL-12 & (1) PEL3-24. Ladders to be stored on beam. Included are (2) hosebed dividers with squared ends, diamond plate top and a vertically hinged diamond plate door (hinged to officer side) wired to the door ajar indicator.	$1,217
3365-0229	Hosebed Storage Box. Located in the officer side hosebed between aluminum hosebed cover center divider and officer side hosebed wall. Includes drop down door (wired to door ajar) w/push-button latches, hosebed style top, composite flooring and (1) divider held 12" short of rear - locate 6" off driver side to form (2) storage areas. Driver side of box to hold (3) pike pole tubes.	$2,450
3365-0236	Officer side vertical storage tunnel behind reduced upper depth right side compartments. Tunnel to hold: 24' 2-section and 14' roof, plus (4) pike poles and a folding ladder. Includes vertically hinged rear smooth plate door with bent D-ring latch.	$2,138
3365-0238	Folding ladder and pike pole storage compartment located in driver side of hosebed. Includes drop down door with push button latch. Compartment sized to store a 10' ladder with feet and (2) pike poles.	$807
3365-0245	Pike pole tubes in officer side storage tunnel to be modified to hold (1) ARH-60 and (1) ARH-72 pike poles.	$182

3365-0246	Officer side vertical storage tunnel behind reduced upper depth right side compartments. Tunnel to hold: 24' 2-section and 14' roof, plus (2) pike poles and a folding ladder. Includes vertically hinged rear 3/16" treadplate door with bent D-ring latch.	$1,967
3365-0253	Ladder storage thru tank for (2) 6" x 10' hardsuction hoses. Reduces selected water tank capacity by approximately 150 gallons.	$1,470
3365-0254	Hard suction storage box with cargo net cover at rear. Located in B1 compartment to be in-line with thru the tank tunnel.	$538
3365-0258	Recessed pike pole storage compartment located officer side "T" of the tank. Compartment sized to store (3) pike poles. Center pike pole will be a multi -purpose" hook.	$622
3365-0259	Recessed pike pole storage compartment located officer side just below the hosebed. Compartment sized to store (2) pike poles.	$415
3365-0260	Ladder storage thru tank for (1) 2-section 24' extension, (1) 14' roof, (1) 10' attic with feet, (3) pike poles and (1) backboard. Reduces selected water tank capacity by approximately 300 gallons.	$2,829
3365-0262	Double Hard Suction Storage Rack for 8' hard suction hoses. Driver side compartment top. Includes spring hold downs with scuff plates (as applicable)	$738
3365-0265	Recessed storage compartment located officer side just below hosebed. Compartment sized to store (1) 10' ladder with feet offset to left and (1) 6' pike pole offset to right, tube to be set back 6" from opening.	$736
3365-0267	Officer side vertical storage tunnel. For use with low hose bed. Tunnel to hold: [#LOC]. Includes vertically hinged rear smooth plate door(s) with push-button latch.	$1,842
3365-0268	Zico electric drop down portable tank rack. Rack located to [#LOC] of body. Rack sized for [#COL] gallon aluminum frame portable tank. The control switching to be located officer side rear compartment face with the rack being in full view of the operator during operations.	$4,983
3365-0271	Ladder storage box in driver side of hosebed. Dimensions to be 25" wide x 8" high x length of hosebed. Includes ladder stop 66" back from opening and diamond plate drop down door with push button latches (wired to door ajar indicator) and composite material overlay on hosebed flooring.	$1,025
3365-0272	Hard Suction Storage Box. Located in the driver side hosebed. Includes vertically hinged door (wired to door ajar) w/push-button latches and nylatron flooring. Box to hold two (2) 6" X 10' hard suction hoses.	$1,465
3365-0274	Hard Suction Storage Box. Located horizontally in the officer side hosebed. Includes vertically hinged door (wired to door ajar) w/push-button latches and nylatron flooring. Box to hold two (2) 6" X 14' hard suction hoses.	$1,465
3365-0275	Hard suction storage rack for (1) 6" X 14' suction hose. Locate [#LOC]. Includes NFPA retaining strap(s).	$367
3365-0276	Zico pike pole mounting brackets (PR). Locate on top of Zico drop-down ladder rack. Brackets to be for D-ring pike poles.	$152
3365-0278	Officer side vertical storage tunnel. For use with low hosebed. Tunnel to hold: 2-Section 24', 14' roof, 10' attic and (2) pike poles. Includes vertically hinged rear diamond plate door(s) with push-button latch. The pike poles and attic ladder to be stored below the 2-section and roof ladders. Ladder tunnel will not extend to top of the body, the area above the ladder tunnel to have hosebed style flooring.	$2,827
3365-0280	Hard Suction Storage Box. Located horizontally in the officer side hosebed. Includes vertically hinged door (wired to door ajar) w/push-button latches and nylatron flooring. Box to hold two (2) 6" X 10' hard suction hoses.	$1,465
3365-0281	Hard Suction Storage Box. Located horizontally in the officer side hosebed. Includes vertically hinged door (wired to door ajar) w/push-button latches and nylatron flooring. Box to hold two (2) 6" X 13' hard suction hoses.	$1,465
3365-0283	Divider Long. To run full length of hose bed above ladder tunnel (front to rear).	$456
3365-0284	Officer side vertical storage tunnel behind reduced upper depth right side compartments. Tunnel to hold: 28' 2-section and 16' roof, (2) pike poles and a folding ladder, plus two 10' lengths of 6" hard suction hose above ladders together with a skinny backboard. Where ladders extend into the pump enclosure, they shall be enclosed from the elements with aluminum treadplate.	$1,579
3365-0285	Officer side vertical storage tunnel. For use with low hosebed. Tunnel to hold: 2-Section 20', 12' roof, 10' attic and (2) pike poles. Includes vertically hinged rear smooth plate door (to accommodate graphics/striping) with push-button latch. Upper storage area to have an open top and run full length of the body. Upper area to have hosebed style flooring.	$2,827
3365-0289	Hard suction hose storage tray. Locate on inboard side of overhead ladder rack. Includes spring hold downs and scuff plates behind spring mounts (as applicable).	$401
3365-0290	Ladder storage thru tank for (1) 3-section 30' extension, (1) 14' roof, (1) 10' attic with feet and (2) 10' pike poles. Reduces selected water tank capacity by approximately 300 gallons for pumpers and 350 gallons for tankers.	$2,599
3365-0292	Hard Suction Storage Box. Located in the driver side hosebed. Includes vertically hinged door (wired to door ajar) w/push-button latches and nylatron flooring. Box to hold one (1) 6" X 12' hard suction hoses.	$733
3365-0293	Cover diamond plate for hydraulic ladder rack power supply. Location: [#LOC].	$185
3365-0294	There shall be a metal plate mounted to the side of the portable tank rack to assist in the application of the NFPA stripe.	$154

3365-0295	Manual drop down portable tank storage rack. Includes forward and rearward securing clamps with manual releases. Locate rack to [#LOC] of body. Rack sized for an aluminum framed [#COL] portable tank.	$1,699
3365-0297	(1) Pike pole storage tube, pike pole hook stored in the up position. (1) Dry wall hook storage using brackets to secure in place rather than tube. Locate inboard side of rack.	$501
3365-0298	(5) Pike pole storage tubes. Locate inboard side of rack with pike pole hooks stored in the up position.	$1,154
3365-0299	Hard suction storage box. Located in the officer side hose bed. Includes a swing open door, vertically hinged on the left hand side (inboard) and wired to door ajar w/push-button latch(es), hose bed style top and nylatron flooring (no divider). Box to hold [#LOC] tubes.	$1,465
3365-0302	Provision to store (4) Fire Department supplied 50' lengths of 2-1/2" high rise hose packs on right side compartment top.	$1,064
3365-0303	Four (4) pike poles and a folding ladder tucked behind ground ladders on the adjustable ladder tracks.	$1,031
3365-0304	Hard suction storage within the hosebed. (1) Hard suction tube shall be located on each side of the hosebed center divider. The rear and top hosebed covers shall be used for access.	$1,465
3365-0305	Provision to store (4) Fire Department supplied 50' lengths of 2-1/2" high rise hose packs on right side compartment top. (6) PAC ADJUSTAMOUNT brackets to secure hose.	$1,394
3365-0306	Backboard storage sleeve with containment strap(s). Located in L1 and R1 compartments just below compartment offset to be approximately 9" high x 27" wide as clearance permits. Locate as far forward as possible.	$1,103
3365-0307	Hard suction storage box. Located in the officer's side hose bed. Includes lift-up door (wired to door ajar) w/bent D-ring latch, hose bed style top and flooring. Box to hold (2) 6" x 10' long tubes.	$1,465
3365-0308	Hard Suction Storage Rack. Officer side in adjustable track below ladders (if applicable). Includes spring hold downs and scuff plates.	$359
3365-0309	Hard Suction Storage Box with long handle tool storage trough with stop at 72". Stored at rear panel driver side for two (2) hoses. Includes vertically hinged smooth plate door and bent D-ring latch.	$625
3365-0310	Hard suction storage box, smooth plate side wall construction painted job color. Located on the [#LOC]. Includes vertically hinged door(s) (wired to door ajar) w/D-Ring latch(s). Box to hold (3) tubes and to extend to the back side of the L2 compartment and to be approximately the same height as L1, L2 compartments.	$1,465
3365-0311	Hard suction storage box with (2) pike poles (pr). Stored (1) each side below "T" of tank. Includes hinged door with push-button latch.	$960
3365-0312	Ladder storage thru tank for AlcoLite ladders (1) 3-section 35' extension, (1) 16' roof, (1) 10' attic with feet and (2) pike poles. Reduces selected water tank capacity by approximately 250 gallons for pumpers and 300 gallons for tankers.	$2,829
3365-0316	Storage box for (1) 15' length of hardsuction hose. Includes vertically hinged door with latch (wired to door ajar indicator). Locate [#LOC] side below "T" of water tank.	$672
3365-0317	Zico electric drop down portable tank rack. Rack located to [#LOC] of body. Rack sized for [#COL] gallon aluminum frame portable tank. The control switching to be located driver side rear compartment face with the rack being in full view of the operator during operations.	$4,983
3365-0319	Hard Suction Storage Rack. Driver side compartment top. Includes spring hold downs and scuff plates behind spring mounts (as applicable).	$344
3365-0320	Storage box on officer side compartment top with hinged full length side hinged down with butterfly latches (wired to door ajar). Box to be approximately 116" long x 12" high x 12" deep. Storage is for 250' of 2.5" DJ hose with nozzle for hi-rise pac with black dri-deck flooring.	$945
3365-0321	Horizontal ladder bracket, Includes .187" smooth aluminum boot painted black durabak with ladder hold down. Location and type of ladder: [#LOC].	$285
3365-0322	Recessed New York hook and pike pole storage compartment located officer side just below the "T" of the tank to include a smooth plate door with thumb latch(s). Compartment sized to store (2) Fire Hooks Unlimited New York Hook Model RH-6 and RH-8 and (2) pike poles.	$807
3365-0323	Double hard suction storage rack. Driver side compartment top. Horizontally mounted (1) hard suction cradle next to the other. Includes spring hold downs with scuff plates (as applicable). Rack shall be capable of holding (2) 3" hard suction hose.	$683
3365-0324	Hard suction storage boxes welded one each side to upper body hose bed side sheets, to be painted as applicable. Includes vertically hinged brushed stainless steel rear access doors and aluminum hose troughs. Requires minimum 88" high pumper body.	$2,411
3365-0325	Officer side vertical storage tunnel behind special reduced upper depth right side compartments. Tunnel to hold: 35' 3-section and 14' roof, (2) pike poles and a folding ladder. Where ladders extend into the pump enclosure, they shall be enclosed from the elements with aluminum treadplate. Includes vertically hinged rear smooth aluminum door with bent D-ring latch.	$1,842
3365-0326	Recessed pike pole storage compartment located below officer side "T" of the tank. Compartment sized to store (2) pike poles.	$622

3365-0328	Officer side vertical storage tunnels. For use with low hose bed. Tunnels to hold [#LOC]. The upper ladder tunnel shall be full length of hose bed, same width as lower ladder tunnel. The upper ladder tunnel compartment shall be fully enclosed except for an open top/roof which will be open to the elements. Includes vertically hinged rear .1875" smooth plate doors with D-ring latch on each door accessible at the rear of body.	$1,960
3365-0329	Ladder storage thru tank for (1) 2-section 24' extension, (1) 16' roof, (1) 10' attic with feet and (2) pike poles. Reduces selected water tank capacity by approximately 250 gallons for pumpers and 300 gallons for tankers.	$2,599
3365-0330	Zico electric drop down portable tank rack. Rack located to [#LOC] of body. Rack sized for [#COL] gallon aluminum frame portable tank. The control switching to be located driver side front compartment face with the rack being in full view of the operator during operations.	$4,983
3365-0331	Recessed folding ladder and pike pole storage compartment located right rear of body up high. Compartment sized to store a 10' ladder with feet and (2) 12' pike poles.	$937
3365-0332	Recessed pike pole storage compartment located left rear of body up high. Compartment sized to store (4) 10' pike poles.	$830
3365-0333	Backboard storage for use with low hose bed stroage tunnel only. Storage for (1) backboard vertically in officer side storage tunnel. Includes stop bracket at the front.	$337
3365-0334	Ladder Storage Box. Located in the officer side hosebed. The top shall be enclosed using the hosebed cover, the rear access shall be included in the vinyl rear flap as part of the hose bed cover (hinged door not included), The hosebed cover and rear flap shall be sold separately. Box to hold (1) Alcolite PEL 24' 3-section, (1) Alcolite PRL 12' roof, (1) Alcolite FL 10' attic ladder, (2) backboards and (2) pike poles.	$2,525
3365-0335	Miscellaneous storage in hosebed above the ladder tunnel. Upper area open and main hosebed cover to be used to cover top area of the storage area. There is to be a bolted end plate at the rear of the storage area, horizontal adjustable tracks 60" from the rear mounted forward with a divider.	$333
3365-0337	Two (2) pike poles and a folding ladder tucked behind ground ladders on the adjustable ladder tracks on the officer's side outside of the hose bed.	$1,031
3365-0338	Hard Suction Storage Box. Located in the [#LOC] hose bed. Includes vertically hinged door (wired to door ajar) w/push-button latches (without nylatron flooring as preferred by customer). Box to hold (2) 10' hard suction hoses.	$1,465
3365-0339	Hard Suction Storage Box. Located in the [#LOC] hose bed. Includes vertically hinged door (wired to door ajar) w/D-Ring latch(s) and Nylatron flooring. Box to hold (2) 10' hard suction hoses.	$1,528
3365-0340	Dual hard suction hose storage with stops located in the officer side ladder storage compartment. Includes a hinged rear access door (wired to door ajar) w/bent D-ring latch.	$1,033
3365-0342	Dual hard suction hose storage with stops located in the officer side upper header. Includes a lift-up rear access door (wired to door ajar) w/bent D-ring latch.	$1,663
3365-0344	Hard suction storage box. Located in the officer side hose bed. Includes a swing open diamond plate door, vertically hinged on the right hand side (outboard) and wired to door ajar w/push-button latch(es), hose bed style top and nylatron flooring (no divider). Box to hold [#LOC] tubes.	$1,465
3365-0345	Officer side horizontal storage tunnel between top of tank and below hose bed floor. Tunnel to hold: up to a 24' 2-section and 14' roof, up to (3) pike poles and a folding ladder. Includes a horizontally hinged lift-up rear smooth plate door with bent D-ring latch and a gas tube hold-open.	$1,967
3365-0346	Storage box for (1) 12' length of hard suction hose. Includes vertically hinged door with latch (wired to door ajar indicator). Locate to [#LOC] below "T" of water tank.	$576
3365-0347	Recessed folding ladder storage compartment located driver side just below hosebed. Compartment sized to store a 10' ladder with feet.	$616
3365-0348	Ladder storage box in driver side of hosebed. Dimensions to be 25" wide x 8" high x length of hosebed. Includes ladder stop 66" back from opening and diamond plate drop down door with a D-ring latch (wired to door ajar indicator) and composite material overlay on hosebed flooring.	$1,025
3365-0349	Stop bracket to be located approximately 80" back in the lower area of the driver side storage tunnel.	$115
3365-0350	Hard suction storage box (pr). Stored (1) each side below "T" of tank. Storage boxes shall be lined with black U.H.M.W plastic and include hinged door with push-button latch. Inside compartment and tube tunnel to be enlarged in depth to fit strainers to be pre-connected as stored.	$1,112
3365-0352	Portable Tank Storage Box. Located in the officer side hosebed. Includes vertically hinged door (wired to door ajar) w/push-button latches (hinge to the exterior and latch to the interior), hosebed style top and nylatron flooring (no divider). Box to hold [#LOC] gallon aluminum framed Fol-da-tank portable tank.	$1,465
3370-0023	Tracks for adjustable shelf and/or adjustable tray in single depth or rescue style single depth compartment. Location: [#LOC].	$172
3370-0025	Permanent shelf. Locate in [#LOC].	$89
3370-0026	Adjustable shelf. For compartments that are full height/full depth or lower compartments with full depth. Location: [#LOC].	$222
3370-0027	Tracks for adjustable shelf and/or adjustable tray in the lower area of the compartment. Location: [#LOC].	$87
3370-0028	Tracks for adjustable shelf and/or adjustable tray in the upper area of the compartment. Location: [#LOC].	$46

3370-0029	Adjustable shelf. For compartments with upper shallow depth. Location: [#LOC].	$113
3370-0032	Upper shelf floor overlays. Includes 1/8" smooth plate full width and length of shelf and spaced .5" off shelf floor. Locate: (2) L1, (2) L3, (2) R1, (2) R3 and (1) over top of L1 tool box.	$1,024
3370-0033	Adjustable shelf modification for shelf to have 1" lips. Location: B1 upper shelf.	$101
3370-0034	Shelf full transverse. Locate in [#LOC].	$456
3370-0035	Shelf 1/2 depth in transverse compartment. Locate in [#LOC].	$364
3370-0037	Horizontal track(s) in the upper area of the compartment. Location: [#LOC].	$68
3370-0039	Adjustable shelf. For upper area of compartments with multiple depths. Location: [#LOC].	$222
3370-0040	Adjustable shelf for single depth or rescue style single depth compartment. Location: [#LOC].	$222
3370-0044	All exterior compartments on rescue body will have Unistrut in each compartment unless inapplicable.	$1,478
3370-0046	Adjustable shelf. Shelf to be notched into extended side compartment area. For compartments with upper shallow depth. Location: R3 upper.	$427
3370-0048	Adjustable shelf with 2" lips around entire shelf. For compartments that are full height/full depth or lower compartments with full depth. Location: [#LOC].	$478
3370-0050	Tracks for adjustable shelf and/or adjustable tray in transverse compartment. Location: B1.	$340
3370-0051	Tracks for adjustable shelf and/or adjustable tray in 1/2 or 2/3rds depth of transverse compartment. Location: [#LOC].	$258
3370-0052	Adjustable shelf. For non-transverse compartments that are 16" or greater in depth. Location: [#LOC].	$222
3370-0053	Adjustable shelf. For non-transverse compartments that are up to 15.99" deep. Location: [#LOC].	$113
3370-0054	Tracks for adjustable shelf and/or adjustable tray in compartments 16" or greater in depth. Location: [#LOC].	$172
3370-0055	Tracks for adjustable shelf in shallow compartments up to 15.99" deep. Location: [#LOC].	$87
3370-0056	Tracks for adjustable shelf and/or adjustable tray in compartments 16" or greater in depth. Tracks to run from floor to just below compartment offset/ceiling. Location: [#LOC].	$172
3370-0057	Tracks for adjustable shelf in shallow compartments up to 15.99" deep. Tracks to run from floor/compartment offset tube to just below compartment ceiling. Location: [#LOC].	$87
3370-0063	Tracks for electrical cord reel in the upper area of the compartment. Location: [#LOC].	$86
3370-0064	Adjustable shelf with 2" lips around entire shelf. Location: L3 upper shelves to foward area of compartment only.	$478
3370-0065	Tracks for adjustable shelf and/or adjustable tray in single depth or rescue style single depth compartment. Position tracks within compartment for optimal adjustability. Track height from floor and/or ceiling may be impacted by other items located within the compartment or by general body construction. Location: [#LOC].	$172
3370-0119	Fixed shelf with 1/2" front lip. For non-transverse compartments that are 16" or greater in depth. Location: B1 mounted 9" below roll-up door drum, angles to be only as large as needed.	$222
3370-0127	Permanent shelf. Locate in R1 just above the Zico bottle racks. Front lip of shelf to be bent down.	$152
3370-0128	Permanent shelf. Locate in B1 just above the booster reel. Front lip of shelf to be bent down.	$152
3370-0129	Shelf 1/2 depth in transverse compartment. Rear lip to be 4" high. Locate in [#LOC].	$392
3370-0132	Bolt in shelf. Locate in roof top compartment driver's side, just above the air bottle, forward roof top compartment.	$152
3370-0133	Tracks shall be provided for use with adjustable shelves and/or trays. The tracks shall align for use of a shallow depth adjustable shelf(s) and/or adjustable tray(s). The tracks shall be ran from floor to ceiling to allow the shallow depth adjustable shelf/tray to have full compartment height adjustability. Position tracks within compartment for optimal adjustability. The tracks as installed from floor to ceiling may be impacted by other items located within the compartment; tracks may be cut and continued again as required to provide full height adjustability. The tracks shall be vertically mounted and attached to the side and/or rear walls of the compartments. Location: [#LOC].	$172
3370-0134	Fixed shelf modification for shelf to have 1" lips. Location: [#LOC].	$101
3370-0138	Permanent shelf. Locate in L1 just above the CAFS foam system components. Front lip of shelf to be bent down.	$152
3370-0140	The R2 Compartment shall include Unistrut. (1) Piece each side centered and (4) on back wall evenly spaced.	$316
3370-0142	Permanent shelf for Hurst power unit. Locate on forward bulkhead high as possible [#LOC].	$619
3370-0144	Permanent shelf, bolt in, suspended from ceiling and forward in compartment. Locate in [#LOC].	$272
3370-0145	Adjustable shelf modification for shelf to have 1" lips. Location: B1 upper shelf.	$101
3380-0014	Roll-out generator tray. Includes tray interlock. Locate [#LOC].	$723
3380-0015	Fixed back wall mounted toolboard. Toolboard to be spaced off wall a half inch. Location(s): [#LOC].	$200
3380-0017	Floor mounted roll-out/tilt down tray. Mount on [#LOC] floor.	$1,018
3380-0018	Adjustable roll-out toolboard. Includes upper and lower adjustable track and gas shock actuated. Toolboard sized to compartment height and depth as applicable. Location(s): [#LOC].	$747
3380-0019	Running board suction tray. Includes removable slats in bottom of tray. Location(s): [#LOC]	$476
3380-0021	Hard suction hose storage tray. Locate on inboard side of overhead ladder rack. Includes (2) securing straps.	$380
3380-0022	Floor mounted roll-out tray. Includes 500lbs. tray capacity. Location: [#LOC].	$792
3380-0023	Adjustable mounted roll-out/tilt-down tray. Location(s): [#LOC]. For use in single depth or rescue style compartments.	$1,286

3380-0024	Adjustable mounted roll-out tray. Includes 250 lbs tray capacity. Location(s): [#LOC]	$872
3380-0025	Adjustable mounted roll-out tray. Includes 500 lbs tray capacity. Location(s): [#LOC]	$1,059
3380-0027	Floor mounted Slide Master with tray. Model SM3-SP. Single depth. Mount on [#LOC] floor.	$815
3380-0028	Adjustable mounted Slide Master with tray. Model SM3-SP. Single depth. Location(s): [#LOC]	$1,080
3380-0029	Floor mounted bi-directional Slide Master with tray. Model SM2-D-SP. Mounted on [#LOC].	$1,404
3380-0030	Adjustable mounted bi-directional Slide Master with tray. Model SM2-D-SP. Mounted in transverse area of [#LOC].	$1,669
3380-0033	Hard suction hose storage tray. Locate on top of Zico drop-down ladder rack.	$760
3380-0036	Fixed back wall mounted peg toolboard. Toolboard to be spaced off wall a half inch. Location(s): [#LOC].	$240
3380-0038	Floor mounted roll-out tray with Jonathan Slides. Includes 400lbs. tray capacity. Mount on [#LOC] floor.	$1,386
3380-0039	Adjustable mounted roll-out tray with Jonathan Slides. Includes 400 lbs tray capacity. Location(s): [#LOC]	$1,651
3380-0040	Vertically hinged swing-out tool board. Location: [#LOC]. Hinge along forward compartment wall and position centered between door and back wall. Includes butterfly latch to secure in the closed position that is accessible from the ground.	$1,405
3380-0041	PAC TRAC panels vertically stacked on back wall of compartment. Locate: [#LOC].	$726
3380-0043	Toolbox with slide out trays L1 offset forward. To include (4) individual trays mounted on slides. Reference photos and drawings in engineering file. Each tray to lock in and lock out. Include a 3/16" permanent shelf located directly above top of toolbox. Includes cover plate between tool box and forward compartment wall.	$2,574
3380-0044	Toolbox with slide out trays L3 offset forward (forward of partion). To include (7) individual trays mounted on slides. Reference photos and drawings in engineering file. Each tray to lock in and lock out. Include a 3/16" permanent shelf located directly above top of toolbox. Includes cover plate between tool box and forward compartment wall.	$4,276
3380-0045	Floor mounted Slide Master with tray. Model SM3-SP. 1/2 depth transverse or full depth on non transverse. Mount on [#LOC] floor.	$1,062
3380-0046	Adjustable mounted Slide Master with tray. Model SM3-SP. 1/2 depth in transverse compartments or full depth in upper B1. Mounted in transverse area or extended area of [#LOC].	$1,348
3380-0047	Floor mounted Slide Master with tray. Model SM3-SP. 2/3rds deep. Mount on [#LOC] floor.	$1,191
3380-0049	Running board suction tray (floating style). Includes tapered 3" front corner and removable slats in bottom of tray. Location(s): [#LOC].	$618
3380-0050	Floor mounted double stacked tray with 500# slides in B1.	$980
3380-0051	Pac Trac panels on permanent shelf/floor of compartment. Locate: [#LOC].	$243
3380-0055	Floor mounted roll-out/tilt down tray with aluminum frame. Mount on [#LOC] floor.	$991
3380-0056	Adjustable mounted roll-out/tilt down tray with aluminum frame. Location(s): [#LOC]. For use in single depth or rescue style compartments.	$1,256
3380-0057	Adjustable mounted preconnect storage roll-out tray. Includes extended sides and front for storage of preconnected hose and 500 lbs slide capacity. Location(s): [#LOC]	$1,323
3380-0058	Floor mounted preconnect storage roll-out tray. Includes extended sides and front for storage of preconnected hose and 500 lbs slide capacity. Location(s): [#LOC]	$1,057
3380-0059	Running board suction tray. Outboard (front) wall of tray and rubrail hinged at the bottom with quick release latches for drop down door. Includes tapered 3" front corner and removable slats in bottom of tray. Location(s): [#LOC]	$769
3380-0060	Adjustable tool board with 500 lbs slides. Includes upper and lower adjustable track and gas shock actuated. Tool board sized to compartment height and depth as applicable. Location(s): [#LOC].	$1,027
3380-0061	Compartment underbody. Includes drop down front door with D-ring latches. Locate [#LOC].	$1,390
3380-0062	Adjustable peg tool board. Includes upper and lower adjustable track and gas shock actuated. Tool board sized to compartment height and depth as applicable. Location(s): [#LOC].	$898
3380-0063	Ready Respond Storage cabinet. Includes (5) drawers with gray fronts. No side trim required. Locate floor mounted in [#LOC].	$3,683
3380-0064	Floor mounted roll-out tray. Includes 250lbs. tray capacity. Mount on B1 floor. Front and rear lips of tray to be 9.5".	$1,697
3380-0065	Vertically hinged swing-out toolboard. Location: [#LOC]. Hinge along forward compartment wall and position centered between door and back wall. Includes D-Ring latch to secure in the closed position that is accessable from the ground.	$1,405
3380-0067	Poly box(s) to be located [#LOC]. Box(s) depth (front to rear) to be sized for placement on floor/shelf or tray as applicable to compartment options. Box sized [#COL]	$297
3380-0068	Floor mounted equally sized roll-out trays (PR). Includes 250lbs. tray capacity. Mount on [#LOC] floor.	$1,211
3380-0071	Tool board on dual direction 1000 lb SlideMaster. Includes lock-in/lock-out. Tool board sized to compartment height and depth as applicable. Location(s): [#LOC]	$2,014
3380-0072	Running board suction tray. Includes removable slats in bottom of tray. Tray to be as long as possible. Location(s): [#LOC].	$950
3380-0073	Slidemaster frame powder coated silver. Location(s): [#LOC]	$102

3380-0074	Tool board HD adjustable. Includes return style re-enforcing bends on vertical front and rear edges of tool board, upper and lower adjustable track and gas shock actuated. Tool board sized to compartment height and depth as applicable. Location(s): [#LOC]	$799
3380-0075	Running board suction tray (floating style). Includes tapered 3" front corner and removable slats in bottom of tray. Tray to be as long as possible. Location(s): [#LOC].	$926
3380-0076	Floor mounted roll-out tray, with gas spring. 500 lbs. capacity. Location: [#LOC].	$607
3380-0077	Adjustable roll-out tray with 500 lbs. capacity. Location(s): [#LOC].	$872
3380-0078	Compartment underbody with slide-out tray. Includes drop-down front door with push-button latch(es). [#LOC].	$1,720
3380-0079	Adjustable heavy duty tool board. Includes return style reinforcing bends on vertical front and rear edges of tool board, upper and lower adjustable track and gas shock actuated. Tool board sized to compartment height and depth as applicable. Location(s): [#LOC].	$799
3380-0080	Adjustable heavy duty peg tool board. Includes return style re-enforcing bends on vertical front and rear edges of tool board, upper and lower adjustable track and gas shock actuated. Tool board sized to compartment height and depth as applicable. Location(s): [#LOC]	$949
3380-0081	Roll-out generator tray. Includes tray interlock. Locate [#LOC].	$723
3380-0082	Slidemaster frame powder coated black (EA). Location: [#LOC].	$138
3380-0084	Poly toolboards to be half inch thick. Toolboards to be spaced off wall a half inch. Location(s): L2 back wall and B1 upper side and back walls.	$763
3380-0085	Slide Master Tray in transverse. A slide master tray to be mounted in the transverse module. Tray to extended 70% either side. Top tray to hold four (4) removable speedlay trays (lower tray on slide master to have higher lips on sides and lower on sides for easier removal of trays). Each tray to have the following capacity: (1) 200' of 1.75", (1) 200' of 1.75", (1) 200' of 2.5" and last tray to hold 100' of 1.75", 100' of 1.75" and 100' of 2.5".	$2,907
3380-0086	Vertically hinged swing-out pegboard toolboard. Location: [#LOC]. Hinge along forward compartment wall and position centered front to rear. Includes D-ring latch to secure in the closed position that is accessible from the ground.	$1,490
3380-0087	Adjustable toolboard with 500 lb. slides for use with deep compartments. Includes upper and lower adjustable track with lock in/lock out latch. Toolboard sized to compartment height and depth as applicable. Location(s): [#LOC].	$1,027
3380-0089	Poly tray liners. Locate in the B1 floor mount, B1 adjustable mounted and R3 floor mounted trays. Liner to have hand holes.	$464
3380-0090	Aluminum tool box(es) to be 8" wide x 10" high x 25" deep. Location: L1 compartment floor.	$191
3380-0091	Floor mounted preconnect roll-out tray. Includes 500lbs. tray capacity with (3) 5" tall sides and rear (front to be 2" with area for hand-hold cut-out on each end). To hold up to 150' of 1.75" DJ and placed on top of black dri-deck. Tray to have rotary latching IPO shock(s). Location : [#LOC].	$894
3380-0093	Floor mounted roll-out/tilt down tray. Mount on [#LOC] floor. For use on half transverse trays.	$1,018
3380-0094	Floor mounted roll-out/tilt down tray. Mount on [#LOC] floor. For use on two thirds transverse trays or in the B1above the frame rails.	$1,018
3380-0095	Adjustable mounted roll-out/tilt down tray. Location(s): [#LOC]. For use on half transverse trays or upper deep B1 compartment.	$1,286
3380-0096	Adjustable mounted roll-out/tilt down tray. Location(s): [#LOC]. For use on two thirds transverse trays or B1above the frame rails.	$1,286
3380-0097	Adjustable partition in running board suction tray. Partition to be adjustable from front to back and use old style adjustable track.	$201
3380-0098	Floor mounted Slide Master with tray. Model SMEX w/ 120% extension. 1/2 depth transverse or full depth on non transverse. Mount on [#LOC] floor.	$1,501
3380-0099	Vertically hinged swing-out toolboard. Location: [#LOC]. Hinge along rearward compartment wall and position centered between door and back wall. Includes D-Ring latch to secure in the closed position that is accessable from the ground and a positive hold open device in the open position.	$1,405
3380-0103	Running board suction tray (floating style). Includes tapered 3" front corner and Turtle Tile brand [#COL] floor matting in bottom of tray. Location(s): [#LOC]	$618
3380-0125	Running board suction tray. Outboard (front) wall of tray and rubrail hinged at the bottom with quick release latches for drop down door. Includes removable slats in bottom of tray. Location(s): [#LOC]	$769
3380-0129	Left side running board SS hose tray with Duradek flooring.	$493
3380-0130	Right side running board SS hose tray with Duradek flooring.	$493
3380-0133	On Scene Solutions floor mounted roll-out/tilt down tray mount on [#LOC] floor. This tray shall not exceed 30" in depth.	$1,381
3380-0134	On Scene Solutions adjustable mounted roll-out/tilt down tray mount in the [#LOC] compartment. This tray shall not exceed 30" in depth.	$1,641
3380-0139	Vertically hinged swing-out toolboard. Location: R2. Hinge along forward compartment wall and position centered between door and back wall. The hinge to be full height of toolboard (as applicable). Includes D-Ring latch to secure in the closed position that is accessable from the ground.	$1,475
3380-0140	Generator rollout tray. Includes tray interlock. For use with Harrison compartment mounted generator. Locate in compartment [#LOC].	$489

3380-0142	Pac Trac panels vertically stacked on compartment walls (includes installation on vertically hinged compt door). Locate: [#LOC].	$2,344
3380-0143	Compartment underbody with slide-out tray. Includes front door with D-ring latch(es). Door will be attached to the tray. Locate [#LOC].	$1,985
3380-0146	Vertically hinged swing-out toolboard. Location: [#LOC]. Hinge along rearward compartment wall and position centered between door and back wall. Includes latch to secure in the closed position that is accessible from the ground.	$1,405
3380-0147	Poly toolboards to be half inch thick. Toolboards to be spaced off wall a half inch. Location(s): B1 side and back walls. Includes cut-out for compartment light(s). Toolboards to be approx (2) 30" high x 24" wide and (1) 30" high x 43" wide.	$837
3380-0148	Poly toolboards to be half inch thick. Toolboards to be spaced off wall a half inch. Location(s): L1 back wall, notch around generator gauge panel. Toolboard to be approx 37" high x 32" wide.	$279
3380-0149	Respond Ready toolbox located in the L1 compartment. Toolbox includes (4) drawers with 500 lb. lock-out slides and (4) dividers per drawer. Drawer heights to be (1) 3", (1) 4", (1) 8" and (1) 10" drawer. Includes standard top shelf, gray power coated front panels and galvanized components. Dimensions of overall toolbox 26" W x 27.5" H x 22.7" D.	$2,678
3380-0150	Fixed back wall mounted toolboard with swirled finish. Toolboard to be spaced off wall a half inch. Location(s): [#LOC].	$329
3380-0152	Vertically hinged swing-out toolboard, adjustable in and out. Location: L2. Hinge along rearward compartment wall and position centered between door and back wall. Includes latch to secure in the closed position that is accessible from the ground.	$1,405
3380-0155	Running board suction tray. Includes Turtle Tile brand black floor matting in bottom of tray. Location(s): [#LOC].	$476
3380-0158	Floor mounted roll-out tray. Includes OnScene Solutions slide 81900 series. 500 lbs. tray capacity. Location: [#LOC].	$1,793
3380-0159	Adjustable tool board with 500 lbs slides. Includes upper and lower adjustable track, .75" x .75" aluminum angle welded to front edge and gas shock actuated. Tool board sized to compartment height and depth as applicable. Location(s): [#LOC].	$799
3380-0162	Vertically hinged swing-out pegboard toolboard. Location: [#LOC]. Hinge along rearward compartment wall and position centered front to rear. Includes latch to secure in the closed position and gas shock to secure in the open position that is accessible from the ground.	$1,524
3380-0167	Vertically hinged heavy duty swing-out toolboard. Location: [#LOC]. Hinge along forward compartment wall and position centered between door and back wall. Includes D-Ring latch to secure in the closed position that is accessible from the ground. Hinge made from 1/2" stainless steel rod and stainless steel plate with flanged bearing top and bottom.	$1,475
3380-0168	Floor mounted roll-out tray with 500 lbs. capacity. Locate in R1 offset forward. Tray to be half the width of compartment.	$607
3380-0169	Adjustable roll-out tray with 500 lbs. capacity. Tray to have 6" lips. Location(s): [#LOC].	$1,123
3380-0173	Vertically hinged heavy duty swing-out pegboard toolboard. Location: [#LOC]. Hinge along forward compartment wall and position centered between door and back wall. Includes D-Ring latch to secure in the closed position that is accessable from the ground. Hinge made from 1/2" stainless steel rod and stainless steel plate with flanged bearing top and bottom.	$1,559
3380-0175	Floating style left side running board SS hose tray with Duradek flooring.	$588
3380-0176	Floating style right side running board SS hose tray with Duradek flooring.	$588
3380-0177	Prepare upper back walls of compartment L3 and L4 with studs for dealer to provide plywood (or whatever material) toolboard panels. Studs are to be threaded stainless steel.	$266
3380-0178	Vertically hinged swing-out toolboard. Location: R1, full height. Hinge along rearward compartment wall and position 5" in from door pan. Includes dual single point D-Ring latches to secure in the closed position that is accessible from the ground.	$1,405
3380-0179	Vertically hinged heavy duty swing-out aluminum tool board(s) shall be provided for compartment(s) [#LOC]. The tool board shall be constructed of 1/4" (.25") smooth aluminum plate, peg board style, and be sized in height and length as applicable. The tool board shall be position centered between door and back wall and hinged along rearward wall mounted with two large pin hinge points, attached to a 3" x 3" extrusion, that will permit the board to swing out of the compartment for easier access to tools and/or equipment. The tool board shall latch to a 3" x 3" extrusion, with a Tri-Mark latch to secure the toolboard in the closed position.	$1,905
3380-0180	(2) Hand hold slotted cut-outs shall be provided on rollout tray's front wall (one each side), for easier roll-out/roll-in. Rubber trim shall line the hand cut outs. Approximate size of cut-out to be 1-1/2" x 5". Locate on each tray in [#LOC].	$35
3380-0181	Vertically hinged swing-out toolboard. Located in [#LOC] 12" from door. Hinge along rearward compartment wall and position centered between door and back wall. Includes D-Ring latch to secure in the closed position that is accessable from the ground and a positive hold open device in the open position.	$1,405
3380-0182	Floor mounted slidemaster roll-out tray to hold (3) SCBA donning stations. Donning stations will be Zico spring clip brackets. Location [#LOC].	$1,605

3380-0187	Dual toolboards vertically hinged heavy duty swing-out toolboards. Location: [#LOC]. The inboard toolboard shall be hinged along rearward compartment wall and positioned 8" off inboard/back wall of the compartment. The outboard toolboard shall be hinged along forward compartment wall and positioned 8" outboard of other (inboard) tool board. Includes (1) D-Ring latch per toolboard to secure in the closed position that is accessible from the ground. Hinge made from 1/2" stainless steel rod and stainless steel plate with flanged bearing top and bottom.	$3,244
3380-0188	Slide Master floor mounted roll-out tray Model # SM3-SP shall be provided. The capacity rating shall be 1000 pounds distributed load and 500 pounds end load at full extension. Location: [#LOC].	$1,773
3380-0189	Running board suction tray with a diamond plate door hinged on the inboard side with quick release flush latch(s) and a lanyard type holding device. Includes removable slats in bottom of tray. Location(s): [#LOC].	$1,009
3380-0190	Vertically hinged swing-out tool board. Location: [#LOC]. Hinge along forward compartment wall and position halfway in from door opening. Includes single point D-ring latch to secure in the closed position that is accessible from the ground.	$1,405
3380-0191	Vertically hinged heavy duty swing-out toolboard. Location: [#LOC]. Hinge along rearward compartment wall and position centered between door and back wall. Includes D-Ring latch to secure in the closed position that is accessible from the ground. Hinge made from 1/2" stainless steel rod and stainless steel plate with flanged bearing top and bottom.	$1,475
3380-0193	Poly toolboards to be half inch thick. Toolboards to be spaced off interior/backwall a half inch. Location(s):[#LOC].	$763
3380-0194	PAC TRAC panels vertically stacked on each side of Swing-out Toolboard. Locate:[#LOC].	$1,450
3380-0195	Poly boxes (4) to be located [#LOC]. Box depth (front to rear) to be sized for placement on floor/shelf or tray as applicable to compartment options. All (4) boxes shall be 10" in height and equal width to fill the placement area designated.	$1,188
3380-0196	Vertically hinged heavy duty swing-out pegboard toolboard. Location: [#LOC]. Hinge along rearward compartment wall and includes D-Ring latch to secure in the closed position that is accessible from the ground. Hinge made from 1/2" stainless steel rod and stainless steel plate with flanged bearing top and bottom.	$1,545
3380-0197	Floor mounted roll-out/tilt down tray with aluminum frame. Mount on [#LOC] floor. Tray(s) to have 2" high sides all around IPO standard.	$991
3380-0198	Adjustable mounted roll-out/tilt down tray with aluminum frame. Location(s): [#LOC]. For use in single depth or rescue style compartments.	$1,256
3380-0199	Floor mounted bi-directional Slide Master with tray. Model SM2-D-SP. Includes fixed toolboard centered in tray lengthwise extending up as high as possible. Toolboard to be fabricated from 1.5" square aluminum tubing for frame and centered inside of frame shall be .250" smooth plate with bracing on each end for rigidity when tools are mounted. Tray/toolboard mounted on L1/R1 transverse floor.	$2,175
3380-0200	Running board suction tray (floating style). Includes tapered 3" front corner and removable slats in bottom of tray. Location(s): [#LOC]. Trays to be smooth plate painted black durabak.	$782
3380-0201	PAC TRAC panels vertically stacked on each side of swing-out tool board. Locate: [#LOC].	$1,450
3380-0203	Adjustable tool peg board. Includes upper and lower adjustable track and gas shock actuated. Tool board sized to compartment height and depth as applicable. Location(s): [#LOC].	$868
3380-0204	Floor mounted Slide Master with tray. Model SM3-LP (low profile). Single depth. Mount on [#LOC] floor.	$870
3380-0206	Adjustable pegboard toolboard with 500 lb. slides for use with deep compartments. Includes upper and lower adjustable track with lock in/lock out latch. Toolboard sized to compartment height and depth as applicable. Location(s): [#LOC].	$1,093
3380-0207	Pac Trac panels vertically stacked on each side of (1) rollout tool board in compt [#LOC].	$726
3380-0208	There will be a adjustable rollout tray/toolboard combo in L1. The tool board will be mounted to the center of tray. The tray will be a standard 500# adjustable rollout tray.	$1,112
3390-0001	Compartment [#LOC] to have the following storage package: (1) vertical partition 20" off forward wall and the following located forward of the partition: (1) floor mntd roll-out tray w/500lb slds and (2) adjustable shelves. Rearward of partition: (2) adjustable heavy duty tool boards.	$2,698
3390-0002	Compartment [#LOC] to have the following storage package: (1) vertical partition centered off forward wall and the following located forward of the partition: (1) floor mntd roll-out tray w/500lb slds and (2) adjustable shelves. Rearward of partition: (2) adjustable heavy duty tool boards.	$2,698
3390-0003	Compartment [#LOC] to have the following storage package: (1) vertical partition 20" off rearward wall and the following located forward of the partition: (1) floor mntd roll-out tray w/500lb slds and (2) adjustable shelves. Rearward of partition: (1) adjustable heavy duty toolboard.	$2,698
3390-0004	Compartment [#LOC] to have the following storage package: (1) vertical partition 20" off forward wall and the following located forward of the partition: (1) floor mntd roll-out tray w/250lb slds, (1) adjustable roll-out tray w/250lb slds and (1) adjustable shelf. Rearward of partition: (3) adjustable tool boards.	$4,047
3390-0005	Compartment [#LOC] to have the following storage package: (1) vertical partition centered off forward wall and the following located forward of the partition: (1) floor mntd roll-out tray w/250lb slds, (1) adjustable roll-out tray w/250lb slds and (1) adjustable shelf. Rearward of partition: (3) adjustable heavy duty tool boards.	$4,047

3390-0006	Compartment [#LOC] to have the following storage package: (1) vertical partition 20" off rearward wall and the following located forward of the partition: (1) floor mntd roll-out tray w/250lb slds, (1) adjustable roll-out tray w/250lb slds and (1) adjustable shelf. Rearward of partition: (1) adjustable tool board.	$2,557
3390-0007	Compartment [#LOC] to have the following storage package: (1) vertical partition 20" off forward wall and the following located forward of the partition: (1) permanent shelf centered, (1) floor mntd roll-out tray w/250lb slds and (2) adjustable shelves (above permanent shelf). Rearward of partition: (1) permanent shelf 18" off floor, (1) floor mntd roll-out tray w/250lb slds (below permanent shelf) and (2) adjustable tool boards (above the permanent shelf).	$3,365
3390-0008	Compartment [#LOC] to have the following storage package: (1) vertical partiton centered off forward wall and the following located forward of the partiton: (1) permanent shelf centered, (1) floor mntd roll-out tray w/250lb slds and (2) adjustable shelves. Rearward of partition: (1) permanent shelf 24" off floor, (1) floor mntd roll-out tray w/250lb slds (below permanent shelf) and (2) adjustable tool boards (above the permanent shelf).	$3,365
3390-0009	Compartment [#LOC] to have the following storage package: (1) vertical partition 20" off rearward wall and the following located forward of the partition: (1) permanent shelf centered, (1) floor mntd roll-out tray w/250lb slds and (2) adjustable shelves. Adjustable tracking to be provided above (as applicable) and below permanent shelf. Rearward of partition: (1) adjustable tool board.	$2,135
3390-0010	Compartment [#LOC] to have the following storage package: (1) vertical partition 20" off forward wall and the following located rearward of the partition: (1) permanent shelf 15" off floor, (1) floor mntd roll-out tray w/250lb slds (below permanent shelf) and (2) adjustable tool boards (above the permanent shelf).	$2,283
3390-0011	Compartment [#LOC] to have the following storage package: (1) vertical partition 20" off rearward wall and the following located forward of the partition: (1) permanent shelf 15" off floor, (1) floor mntd roll-out tray w/250lb slds (below permanent shelf) and (2) adjustable tool boards (above the permanent shelf).	$2,283
3390-0012	Compartment [#LOC] to have the following storage package: (2) vertical partions- (1) 18" off forward and (1) 18" off rearward wall and the following located forward of the forward partion: OPEN. Centered between partions: (1) permanent shelf 24" off floor, (1) floor mntd roll-out tray w/250lb slds (below permanent shelf) and (2) adjustable tool boards (above the permanent shelf). Rearward of the rear partion: OPEN.	$2,346
3390-0013	Poly divided hose storage 5 slot for hose up to 2.5" diameter. Location: [#LOC].	$744
3390-0021	Compartment [#LOC] to have the following storage package: (1) vertical partition 20" off rearward wall and the following located forward of the partition: (1) floor mntd roll-out tray w/250lb slds and (1) adjustable shelf. Rearward of partition: (2) adjustable tool boards.	$2,480
3390-0050	Bolt-in partition wall. Locate in officer side transverse module roll-out tray. Partition to run full length front to back, partition to be approx. 45" long. Partition to be offset approx 10" back from rearward side lip of roll out tray.	$598
3390-0051	Compartment [#LOC] to have the following storage package: (1) vertical partition 20" off forward wall and the following located forward of the partition: (2) adjustable shelves. Rearward of partition: (2) heavy duty adjustable tool boards.	$2,094
3390-0052	Compartment [#LOC] to have the following storage package: (1) vertical partition 24" off forward wall and the following located forward of the partition: (1) permanent shelf centered, (1) floor mntd roll-out tray w/250lb slds and (2) adjustable shelves (above permanent shelf). Rearward of partition: (1) permanent shelf 18" off floor, (1) floor mntd roll-out tray w/250lb slds (below permanent shelf) and (2) adjustable tool boards (above the permanent shelf).	$3,365
3390-0054	Compartment [#LOC] to have the following storage package: (1) vertical partition 20" off forward wall and the following located forward of the partition: (3) adjustable shelves. Rearward of partition: (2) adjustable heavy duty tool boards.	$2,521
3390-0055	Compartment [#LOC] to have the following storage package: (1) vertical partition 14" off rearward wall and the following located forward of the partition: (1) adjustable shelf with tracks, (1) floor mounted Slide Master with tray model SM3-SP slides and (1) adjustable roll-out tray w/250lb slides.	$2,270
3390-0059	Compartment [#LOC] to have the following storage package: (1) vertical partition 18" off rearward wall and the following located forward of the partition: (1) adjustable shelves.	$399
3390-0060	Compartment [#LOC] to have the following: (1) vertical partition located 10" off rearward wall (full height and depth as applicable). Forward of vertical partition: (1) fixed back wall mounted peg toolboard in the upper section and spaced off back wall .5" and (1) permanent shelf at offset.	$516
3390-0062	Compartment [#LOC] to have the following storage package: (1) vertical partition 20" off rearward wall and the following located forward of the partition: (2) adjustable heavy duty peg tool boards. Rearward of partition: (1) floor mntd roll-out tray w/500lb slds and (2) adjustable shelves.	$3,002
3390-0063	Compartment [#LOC] to have the following storage package: (1) vertical partition 20" off rearward wall and the following located forward of the partition: (2) adjustable peg tool boards. Rearward of partition: (3) adjustable shelves.	$2,618
3390-0067	Compartment [#LOC] to have the following storage package: (1) vertical partition centered off forward wall and the following located forward of the partition: (2) adjustable tool boards. Rearward of partition: (2) adjustable shelf.	$2,081

3390-0068	Compartment [#LOC] to have the following storage package: (1) vertical partition 20" off rearward wall and the following located forward of the partition: (1) adjustable shelf. Rearward of the partition: (1) floor mounted 500# roll-out tray to hold Speedy Dry Hopper. Tray to have notch on front wall for Speedy Dry Hopper valve. Hopper to hold #100 pounds.	$2,562
3390-0070	Compartment [#LOC] to have the following storage package: (1) vertical partition 20" off rearward wall and the following located forward of the partition: (1) floor mntd roll-out tray w/250lb slds and (3) adjustable shelves. Rearward of partition: (1) adjustable tool board.	$2,380
3390-0073	Bolt-in Partion wall (front to rear and as high as possible). Locate centered in transverse compartment.	$515
3390-0074	Compartment [#LOC] to have the following storage package: (1) vertical partition 14" off rearward wall and the following located forward of the partition: (1) floor mntd roll-out tray w/250lb slds, (1) adjustable roll-out tray w/250lb slds and (1) adjustable shelf. Rearward of partition: (2) adjustable tool board.	$3,555
3390-0082	Compartment [#LOC] to have the following storage package: (1) vertical partiton centered off forward wall and the following located forward of the partiton: (2) adjustable shelves. Rearward of partition: (3) adjustable shelves, (1) floor mntd roll-out tray w/250lb slds and (2) adjustable roll-out tray w/250lb slds.	$3,992
3390-0083	Compartment [#LOC] to have the following storage package: (1) vertical partition centered off forward wall and the following located forward of the partition: (1) floor mntd roll-out tray w/250lb slds, (1) adjustable roll-out tray w/250lb slds and (2) adjustable shelves. Rearward of partition: (2) adjustable tool boards.	$3,780
3390-0084	Compartment [#LOC] to have the following storage package: (1) vertical partition 18" off rearward wall and the following located forward of the partition: (1) floor mntd roll-out tray w/250lb slds and (2) adjustable shelves.	$1,418
3390-0086	Compartment [#LOC] to have the following storage package: (1) vertical partition 30" off forward wall and the following located forward of the partition: (1) floor mntd roll-out tray w/250lb slds, (1) adjustable roll-out/tilt down tray w/250lb slds and (1) adjustable shelf. Rearward of partition: (1) adjustable tool boards.	$3,225
3390-0088	Compartment [#LOC] to have the following storage package: (1) vertical partition 30" off forward wall and the following located forward of the partition: (1) adjustable toolboard. Rearward of partition: (3) adjustable shelves.	$1,691
3390-0089	Compartment [#LOC] to have the following storage package: (1) vertical partition 22" off forward wall and the following located rearward of the partition: (1) adjustable shelf.	$507
3390-0090	Compartment [#LOC] to have the following storage package: (1) vertical partition 14" off rearward wall and the following located forward of the partition: (1) adjustable shelf. Rearward of partition: (1) adjustable toolboard.	$1,252
3390-0091	Compartment [#LOC] to have the following storage package in the lower full depth area: (1) vertical partition centered off forward wall and the following located forward of the partition: (1) adjustable shelf.	$507
3390-0092	Compartment [#LOC] to have the following storage package: (1) vertical partition 18" off driver side wall and the following located to the officer side of the partition: (2) adjustable shelves.	$727
3390-0093	Compartment [#LOC] to have the following storage package: (1) vertical partition 20" off forward wall and the following located forward of the partition: (2) adjustable shelves. Rearward of partition: (2) adjustable peg tool boards.	$2,375
3390-0095	Compartment [#LOC] to have the following storage package: (1) vertical partition 24" off forward wall and the following located forward of the partition: (1) floor mntd roll-out tray w/250lb slds and (2) adjustable shelves. Rearward of partition: (1) adjustable tool board.	$2,167
3390-0096	Compartment [#LOC] to have the following storage package: (1) vertical partition 14" off rearward wall and the following located forward of the partition: (1) floor mntd roll-out tray w/500lb slides, (1) adjustable roll-out tray w/500lb slides and (1) adjustable shelf with tracks.	$2,441
3390-0097	Compartment [#LOC] to have the following storage package: (2) adjustable roll-out tray w/500lb slides, (1) adjustable shelf with tracks and (1) SCBA/Fire Extinguisher storage rack floor mounted to hold (4) bottles to be stored angled downward in the compartment. The bottom and sides are to include composite material. Each storage slot to be 10" wide x 10" high.	$4,324
3390-0098	Compartment [#LOC] to have the following storage package: (1) air bag storage rack offset rearward and the following located forward of the storage rack: (1) adjustable shelf with tracks and (1) poly box floor mounted. The air bag storage rack to have (6) slots, each slot to be 2"W x 21"H x 24"D. The poly box to be 15"W x 10"H x 24"D..	$1,927
3390-0099	Compartment [#LOC] to have the following storage package: (1) floor mntd roll-out tray w/500lb slides, (1) adjustable roll-out tray w/500lb slides and (2) adjustable shelf with tracks. Floor mounted roll-out tray to have 10" high side walls.	$3,447
3390-0100	Compartment [#LOC] to have the following storage package: (1) vertical partition 12" off rearward wall and the following located forward of the partition: (3) adjustable shelves - (2) shevles located above breaker box and (1) shelf located below. Rearward of partition: (1) adjustable tool board.	$1,775
3390-0101	Compartment [#LOC] to have the following storage package: (1) permanent shelf mounted 18" above compartment floor. Above the permanent shelf: (1) vertical partition located 15" off rearward wall and (1) adjustable toolboard rearward of the vertical partition.	$1,135

3390-0102	Compartment [#LOC] to have the following storage package: (1) vertical pegboard partition 14" off rear wall and the following located forward of the partition: in upper area (2) adjustable shelf and (1) permanent shelf at offset (above extrusion if applicable).	$661
3390-0103	Compartment [#LOC] to have the following storage package in upper area: (2) adjustable shelf. In lower area: (2) adjustable toolboards in forward area, (1) #500 floor mounted roll-out tray in rearward 30" and (1) permanent shelf at offset below extrusion.	$2,640
3390-0109	Compartment [#LOC] to have the following storage package: (1) vertical partition 17" off rearward wall and the following located forward of the partition: (1) floor mntd roll-out tray w/250lb slds and (2) adjustable shelves. Rearward of partition: (1) adjustable tool board.	$2,167
3390-0114	Compartment [#LOC] to have the following storage package in the lower full depth area: (1) vertical partition located at compartment offset and the following located forward of the partition: (1) floor mntd roll-out tray w/500lb slds and (1) adjustable shelf.	$1,299
3390-0115	Compartment [#LOC] to have the following storage package: (1) Fixed back wall mounted peg toolboard spaced off wall a half inch and (1) adjustable shelf attached to the toolboard..	$594
3390-0116	Compartment [#LOC] to have the following storage package: (1) vertical partition 20" off rearward wall and the following located forward of the partition: (3) adjustable shelves. Rearward of partition: (1) adjustable tool board.	$1,782
3390-0117	Compartment [#LOC] to have the following storage package in full depth lower area: (1) vertical partition 46" off rearward wall and the following located rearward of the partition: (1) adjustable mounted roll-out tray w/500lb slides	$1,293
3390-0120	Compartment [#LOC] to have the following storage package in the lower full depth area: (1) vertical partition located at compartment offset and the following located forward of the partition: (1) floor mntd roll-out tray w/500lb slds and (1) adjustable roll-out tray w/250lb slds.	$1,949
3390-0123	Bolt-in partition wall. Locate 26" back from inside of extrusion of [#LOC] door opening. Partition will run from the front of truck to rear of truck dividing officerside from drivers side of transverse area.	$299
3390-0124	Compartment [#LOC] to have the following storage package: (1) floor mounted 500# roll-out tray to hold Speedy Dry Hopper. Tray to have notch on front wall for Speedy Dry Hopper valve to hold #50 pounds.	$1,696
3390-0127	Compartment [#LOC] to have the following storage package: (1) vertical partition 24" off forward wall and the following located rearward of the partition: (1) adjustable shelf.	$507
3390-0143	Compartment [#LOC] to have the following storage package: (1) vertical partition 12" off forward wall and the following located rearward of partition: (1) floor mntd roll-out tray, (1) adjustable shelf and (1) adjustable roll-out/tilt down tray.	$2,261
3390-0151	Compartment [#LOC] to have the following storage package: (1) vertical partition 13" off forward wall and the following located rearward of the partition: (1) adjustable shelf.	$593
3390-0152	Compartment [#LOC] lower area to have the following storage package: (1) vertical partition 13" off forward wall and the following located rearward of the partition: (1) adjustable shelf. (1) permanent shelf at compartment offset.	$682
3390-0157	Compartment [#LOC] to have the following storage package in the lower full depth area: (1) vertical partition 25" off rearward wall and the following located forward of the partition: (1) adjustable shelf and (1) floor mounted 500# roll-out tray.	$999
3390-0160	Compartment [#LOC] to have the following storage package: (1) vertical partition 24" off rearward wall and the following located forward of the partition: (1) adjustable tool board. Rearward of partition: (1) floor mntd roll-out tray w/500lb slds and (2) adjustable shelves.	$2,217
3390-0161	Compartment [#LOC] to have the following storage package: (1) vertical partition 16" off rearward wall and the following located forward of the partition: (1) adjustable heavy duty tool board. Rearward of partition: (1) floor mntd roll-out tray w/500lb slides and (3) adjustable shelves with tracks.	$2,437
3390-0188	Compartment [#LOC] to have the following storage package: (1) vertical partition forward of ladder rack hydraulic cyclinder cover and the following located forward of the partition: (1) floor mounted 500# roll-out tray, (1) adjustable roll-out/tilt down tray and (1) adjustable shelf.	$2,216
3390-0196	Compartment [#LOC] to have the following storage package: (1) vertical partiton 20" off forward wall and the following located forward of the partiton: (2) adjustable shelves. Rearward of partition: (1) adjustable heavy duty tool board.	$1,553
3390-0217	Compartment [#LOC] to have the following storage package: (1) vertical partition 27" off rearward wall and the following located forward of the partition: (1) floor mntd roll-out tray w/500lb slds and (1) adjustable shelf. Rearward of partition: (1) adjustable heavy duty toolboard.	$1,997
3390-0234	Compartment [#LOC] to have the following storage package: (1) vertical partition 20" off rearward wall and the following located forward of the partition: (2) adjustable shelves. Rearward of partition: (1) adjustable heavy duty toolboard.	$2,092
3390-0252	Compartment [#LOC] to have the following storage package: (1) vertical partition 20" off forward wall and the following located rearward of the partition: (1) floor mntd roll-out tray w/500lb slds and (2) adjustable shelves. Forward of partition: (1) adjustable heavy duty toolboard.	$2,698
3390-0260	Compartment [#LOC] to have the following storage package: (1) vertical partition 10" off rearward wall and the following located forward of the partition: (2) adjustable shelves. Rearward of partition: (1) 17' Little Giant Ladder.	$798

3390-0261	Compartment [#LOC] to have the following storage package: (1) vertical partition 16" off forward wall and the following located forward of the partition: (3) adjustable shelves. Rearward of partition: (1) adjustable heavy duty toolboard.	$2,637
3390-0266	Compartment [#LOC] to have the following storage package: (1) vertical partition 26" off forward wall and the following located forward of the partition: (1) floor mntd roll-out tray w/500lb slds and (2) adjustable shelves. Rearward of partition: (2) adjustable heavy duty tool boards.	$2,698
3390-0267	Compartment [#LOC] to have the following storage package: (1) vertical partition centered off forward wall and the following located forward of the partition: (1) floor mounted roll-out tray. Rearward of partition: (2) adjustable shelves.	$1,779
3390-0268	Compartment [#LOC] to have the following storage package: (1) vertical partition centered off forward wall and the following located forward of the partition: (1) adjustable shelf. Rearward of partition: (1) floor mounted roll-out tray.	$1,386
3390-0271	Compartment [#LOC] to have the following storage package: (1) vertical partition 26" off forward wall and the following located forward of the partition: (3) adjustable shelves. Rearward of partition: (2) adjustable heavy duty tool boards.	$2,521
3390-0272	Compartment [#LOC] to have the following storage package: (1) vertical partition 16" off rearward wall and the following located forward of the partition: (4) adjustable shelves. Rearward of partition: Speedy Dry Valve and Hose.	$1,494
3390-0273	Compartment [#LOC] to have the following storage package: (1) vertical partition 24" off rearward wall and the following located forward of the partition: (1) adjustable tray, (1) adjustable roll-out tilt down tray and (1) floor mounted slide-out tray. Rearward of partition: (2) adjustable slide-out toolboards.	$4,818
3390-0274	Compartment [#LOC] to have the following storage package: (1) vertical partition 22" off rearward wall and the following located forward of the partition: (1) floor mntd roll-out tray w/500lb slides and (2) adjustable shelves w/500lb slides . Rearward of partition: (1) adjustable roll out heavy duty tool board w/500lb slides.	$2,342
3390-0275	Compartment [#LOC] to have the following storage package: (1) vertical partition 11" off forward wall and the following located rearward of the partition: (1) adjustable shelf with tracks in lower area and (1) adjustable roll out tilt down tray above.	$1,708
3390-0277	Compartment [#LOC] to have the following storage package: (1) vertical partition 18" off forward wall and the following located forward of the partition: (1) adjustable toolboard. Rearward of partition: (2) adjustable shelves.	$1,578
3390-0278	Compartment [#LOC] to have the following storage package: (1) vertical partition approximately 12" off rearward wall and the following located forward of the partition: (2) adjustable roll out heavy duty tool boards w/500lb slides . Rearward of partition: (3) adjustable shelves.	$2,533
3390-0279	Compartment [#LOC] to have the following storage package: (1) vertical partition rearward of cord reel and the following located rearward of partition: (1) adjustable shelf.	$595
3390-0280	Storage system for compartment [#LOC]. Includes vertical partition offset 20" from rearward wall, (2) adj. HD tool boards to rear of partition. (1) Adjustable rollout tray, (1) floor mounted rollout tray and (1) adjustable shelf (notched for clearance as required in the upper storage location) all ahead of partition.	$3,609
3390-0281	Compartment [#LOC] to have the following storage package: (2) Full width permanent shelves, (1) approximately 24" off the floor and (1) approximately 49" off the floor. (1) Vertical partition approximately 12" off forward wall located between the full width permanent shelves. The following located forward of the partition: (2) adjustable shelve. Rearward of partition: (1) adjustable roll out heavy duty tool board w/500lb slides .	$2,180
3390-0282	Compartment [#LOC] to have the following storage package: (1) vertical partition approximately 8" off rearward wall and the following located forward of the partition: (1) floor mounted roll-out tray w/500lb slides, (1) fixed shelf approximately 25" from the ceiling.	$1,030
3390-0283	Compartment [#LOC] to have the following storage package: (1) vertical partition approximately 13" off rearward wall, (1) fixed shelf mounted at the compartment offset below extrusion.	$423
3390-0286	Compartment [#LOC] to have the following storage package: (1) vertical partition approximately 20" off rearward wall and the following located forward of the partition: (1) floor mounted roll out tray w/ 500lb slides and (2) adjustable roll-out tray w/500lb slides (1) upper and (1) lower. Rearward of partition: (2) adjustable roll out heavy duty tool boards w/500lb slides.	$3,798
3390-0287	Compartment [#LOC] to have the following storage package: (1) vertical partition centered off forward wall and the following located rearward of partition: (1) floor mounted roll-out tray and (1) adjustable shelf.	$1,386
3390-0288	Compartment [#LOC] to have the following storage package: (1) vertical partition centered off rearward wall and the following located forward of the partition: (1) adjustable heavy duty peg tool board and fixed forward wall mounted peg toolboard spaced off wall a half inch. Rearward of partition: (3) adjustable shelves.	$2,226
3390-0290	Compartment [#LOC] to have the following storage package: (1) vertical partition 15" off rearward wall and the following located forward of the partition: (1) 2"x2" angle floor mounted to outside edge and (1) permanent shelf just below breaker box. Rearward of partition: (1) adjustable heavy duty tool boards.	$1,202

3390-0291	Compartment [#LOC] to have the following storage package in the lower full depth area: (1) vertical partition 15" off forward wall and the following located forward of the partition: (1) adjustable heavy duty toolboard. Rearward of partition: (1) adjustable shelf.	$1,342
3390-0293	Compartment [#LOC] to have the following storage package: (1) vertical partition 12" off forward wall, and the following located forward of the partition: (1) adjustable tool board, rearward of the partition: (3) adjustable shelves.	$2,064
3390-0294	Compartment [#LOC] to have the following storage package: (1) vertical partition 8" off rearward wall, and the following located forward of the partition: (1) floor mntd roll-out tray w/500lb slds, (3) adjustable shelves. Rearward of partition: open for storage.	$1,669
3390-0296	Compartment [#LOC] to have the following storage package: (1) vertical partition 25" off forward wall and the following located forward of the partition: (1) floor mntd roll-out tray w/500lb slds and (2) adjustable shelves. Rearward of partition: (2) adjustable heavy duty tool boards.	$2,698
4000	**Pump and Tank**	
4000-0036	Stainless Steel Victaulic couplings for all discharge and intake plumbing.	$3,768
4005-0007	Hale Centrifugal Booster PTO Pump - 2 Stage	$15,212
4005-0008	Hale AP 500 PTO single stage Pump	$15,366
4005-0013	Hale QFLO 750-1250 GPM pump, single stage.	$21,155
4005-0014	Hale QMID 1250 GPM single stage Pump	$28,513
4005-0015	Hale QMAX 1000-1250 GPM single stage Pump	$25,444
4005-0016	Hale QMAX 1000-2250 GPM single stage pump.	$25,444
4005-0017	Hale QTWO 1000-1250 GPM two stage Pump	$32,139
4005-0018	Hale QTWO 1500-2000 GPM two stage pump.	$32,996
4005-0019	Waterous CS 750-1250 single stage pump.	$22,211
4005-0020	Waterous CM 750-1250 two stage Pump	$25,512
4005-0021	Waterous CSU 1500-2250 GPM single stage pump.	$25,195
4005-0022	Waterous CMU 1500-2250 GPM two stage pump.	$38,239
4005-0023	Waterous S100 2000 GPM Pump for RLP	$34,126
4005-0024	Hale RSD (1500 GPM) single stage RGA gear box driven pump. For use with rear mount pump body.	$27,314
4005-0036	Extended Hale Pump 1 Year Warranty in addition to the standard 2 year warranty.	$663
4005-0037	Extended Hale Pump 2 Year Warranty in addition to the standard 2 year warranty.	$1,275
4005-0038	Extended Hale Pump 3 Year Warranty in addition to the standard 2 year warranty.	$1,886
4005-0039	Extended Waterous Pump 3 Year Warranty in addition to the standard 2 year warranty.	$1,604
4005-0040	Pump Portable 500 GPM Hale w/4" Tank-to-pump. Location [#LOC]	$20,377
4005-0041	Test pump with 6" steamers and switch to 4.5" steamers afters test.	$160
4005-0044	Rating 3000 GPM Industrial	$2,496
4005-0052	Hale QMAX 1500-2250 GPM single stage Pump with K Gear Box	$36,231
4005-0053	Hale QMAX-21L 1500 pump. Tradition.	$22,644
4005-0054	Hale Qflo-23L 1250 pump. Tradition.	$17,686
4005-0055	Waterous CS Single Stage Pump.	$21,602
4005-0057	Hale DSD Pump 750/1500 GPM single stage	$28,750
4005-0060	Hale HPX300 BD26 Hale Portable Pump mounted in pan. W/Remote controls in Cab. Hook up to Chassis Fuel System.	$18,573
4005-0061	Hale AP 500 MGA T-Case Driven single stage Pump.	$19,300
4005-0062	Waterous S100D (1500 GPM) single stage pump. For use with rear mount pump body.	$35,651
4005-0063	Hale QFLO Plus 750-1250 GPM Pump single stage	$39,133
4005-0079	Hale DSD Pump 750/1500 GPM single stage	$25,174
4005-0080	Hale Centrifugal CBP Booster Pump - 1/Stage w/T-CASE	$17,106
4005-0081	Hale RSD single stage, PTO driven pump. For use with rear mount pump body and mid-ship engine applications.	$18,964
4005-0082	Hale DSD single stage pump.	$24,542
4005-0083	Rating 1500 GPM. Includes rams horn intake adaptors (1) each side	$1,149
4005-0085	Hale QMAX-21L 1750 pump. Tradition.	$22,644
4005-0086	Hale RSD/RGA single stage pump. For use with rear mount pump body.	$27,343
4005-0087	Waterous S100D/TC20 single stage pump. For use with rear mount pump body.	$26,059
4005-0096	Waterous CMU 1500-2250 GPM two stage Pump	$28,555
4005-0098	Waterous Pump TPP-5 Extended Warranty.	$1,604
4005-0099	Hale Pump Pro-Tech Extended 3 Year Warranty in addition to the standard 2 year warranty.	$1,813
4005-0100	Hale AP50 PTO driven pump. Includes driver side 5" intake with cap (shipped loose). Capacity of 500GPM/1892LPM	$11,803
4005-0101	Hale MBP PTO driven pump. Includes driver side 6" intake with cap (shipped loose). Capacity of 750GPM/2839LPM.	$15,841
4005-0102	Hale MBP PTO driven pump. Includes driver side 6" intake with cap (shipped loose). Capacity of 1000GPM/3785LPM.	$15,841
4005-0122	Waterous CSU 1500-2250 GPM single stage Pump. Shall include the Endurance CSC20 Waterous, C20 transmission.	$35,263
4005-0129	Hale 8FG single stage pump. For use with Industrial products.	$35,340
4005-0130	Hale QFLO-PLUS 750-1250 GPM Pump single stage	$20,937

4005-0131	E-ONE 1250-1500 GPM pump, single stage.	$32,233
4005-0132	Hale AP 500 RGA T-Case Driven single stage Pump.	$19,300
4005-0138	Hale QMAX 1000-2250 GPM single stage pump.	$33,290
4005-0143	Hale DSD Pump 750/1500 GPM single stage	$20,734
4005-0147	E-ONE 1250-1500GPM PTO pump, single stage.	$32,237
4005-0148	Hale QMAX-21X 1500 pump. Tradition.	$22,644
4005-0150	Hale MG Pump 500/1000 GPM single stage	$20,046
4005-0151	Install existing pump. Pump model # and serial # must be supplied:_____.	$1,243
4005-0152	Hale MG Pump 500/1000 GPM single stage	$16,960
4005-0154	Hale QMAX-XS 1250-2250 GPM single stage pump.	$26,326
4005-0155	Hale RME/RGA 3000gpm Pump for Rear Mount with (3) 6" Inlets.	$36,108
4010-0016	530 Gallon "T" Water Tank. Note: Any foam cell(s) will reduce the overall water capacity. Tank capacity is 530 US gallons / 441 Imperial gallons / 2006 Liters.	$5,171
4010-0017	780 Gallon "T" Water Tank. Note: Any foam cell(s) and/or storage options thru the tank will reduce the overall water capacity. Tank capacity is 780 US gallons / 649 Imperial gallons / 2952 Liters.	$5,726
4010-0018	1030 Gallon "T" Water Tank. Note: Any foam cell(s) and/or storage options thru the tank will reduce the overall water capacity. Tank capacity is 1030 US gallons / 857 Imperial gallons / 3898 Liters.	$7,128
4010-0019	1280 Gallon "T" Water Tank. Note: Any foam cell(s) and/or storage options thru the tank will reduce the overall water capacity. Tank capacity is 1280 US gallons / 1065 Imperial gallons / 4845 Liters.	$9,111
4010-0020	1530 Gallon"T" Water Tank. Note: Any foam cell(s) and/or storage options thru the tank will reduce the overall water capacity. Tank capacity is 1530 US gallons / 1273 Imperial gallons / 5791 Liters.	$10,944
4010-0035	530 Gallon "R" Water Tank Note: Any foam cell(s) will reduce the overall water capacity. Tank capacity is 530 US gallon / 441 Imperial gallons / 2006 Liters.	$4,733
4010-0036	780 Gallon "R" Water Tank. Note: Any foam cell(s) and/or storage options thru the tank will reduce the overall water capacity. Tank capacity is 780 US gallon / 649 Imperial gallons / 2952 Liters.	$5,657
4010-0037	1030 Gallon "R" Water Tank. Note: Any foam cell(s) and/or storage options through the tank will reduce the overall water capacity. Tank capacity is 1030 US gallon / 857 Imperial gallons / 3898 Liters.	$6,886
4010-0038	1280 Gallon "R" Water Tank. Note: Any foam cell(s) and/or storage options thru the tank will reduce the overall water capacity. Tank capacity is 1280 US gallon / 1065 Imperial gallons / 4845 Liters.	$8,564
4010-0057	530 Gallon "L" shaped Water Tank. Includes lowered rear section for lower hose bed height. Note: Any foam cell(s) optioned will reduce the overall water capacity. Tank capacity is 530 US gallon / 441 Imperial gallons / 2006 Liters.	$7,626
4010-0058	1030 Gallon "T" Water Tank. Includes lower upper "T" for lower hosebed height. Note: Any foam cell(s) optioned will reduce the overall water capacity. Tank capacity is 1030 US gallon / 857 Imperial gallons / 3898 Liters.	$7,128
4010-0059	530 Gallon "T" Water Tank. Includes raised lower "T" and rear tank overhang for shallow upper area rear compartment. Note: Any foam cell(s) will reduce the overall water capacity. Tank capacity is 530 US gallon / 441 Imperial gallons / 2006 Liters.	$6,462
4010-0060	530 Gallon "T" Water Tank. Includes raised lower "T" and rear tank overhang for deep upper area rear compartment. Note: Any foam cell(s) will reduce the overall water capacity. Tank capacity is 530 US gallon / 441 Imperial gallons / 2006 Liters.	$6,851
4010-0061	530 Gallon "T" Water Tank. Includes lowered "T" and rear tank overhang for shallow upper area rear compartment. Note: Any foam cell(s) will reduce the overall water capacity. Tank capacity is 530 US gallon / 441 Imperial gallons / 2006 Liters.	$5,171
4010-0064	780 Gallon" L" shape Water Tank. Includes lowered rear section for lower hosebed height. Note: Any foam cell(s) optioned will reduce the overall water capacity. Tank capacity is 780 US gallon / 649 Imperial gallons / 2952 Liters.	$8,181
4010-0065	680 Gallon "T" Water Tank. Note: Any foam cell(s) and/or storage options thru the tank will reduce the overall water capacity. Tank capacity is 680 US gallon / 566 Imperial gallons / 2574 Liters.	$5,726
4010-0067	875 Gallon "R" Water Tank (Special add for Canada bid that has specific Imperial capacity). Tank capacity is 875 US gallon / 728 Imperial gallons / 3312 Liters.	$6,886
4010-0068	510 Gallon "T" Water Tank. Note: Any foam cell(s) will reduce the overall water capacity. Tank capacity is 510 US gallon / 424 Imperial gallons / 1930 Liters.	$5,171
4010-0071	780 Gallon "R" Water Tank. Note: Any foam cell(s) and/or storage options thru the tank will reduce the overall water capacity. Tank capacity is 780 US gallon / 649 Imperial gallons / 2952 Liters.	$6,747
4010-0072	1030 Gallon" L" shape Water Tank. Includes lowered rear section for lower hose bed height. Note: Any foam cell(s) optioned will reduce the overall water capacity. Tank capacity is 1030 US gallon / 857 Imperial gallons / 3898 Liters.	$10,122
4010-0073	530 Imperial Gallon "R" water tank. Note: Any foam cell(s) and/or storage options through the tank will reduce the overall water capacity.	$5,446
4010-0074	530 Gallon "T" Water Tank. Note: Any foam cell(s) will reduce the overall water capacity. Fill towers to be located side by side and offset rearward due to hosebed storage pan partition. Tank capacity is 530 US gallon / 441 Imperial gallons / 2006 Liters.	$6,384
4010-0075	Vent tube height in watertower to be 4" lower than standard.	$257
4010-0076	3530 Gallon "T" Water Tank. Note: Any foam cell(s) and/or storage options thru the tank will reduce the overall water capacity. Tank capacity is 3530 US gallons / 2939 Imperial gallons / 13362 Liters.	$25,216

4010-0077	1250 Gallon "T" Water Tank. Note: Any foam cell(s) and/or storage options thru the tank will reduce the overall water capacity. Tank capacity is 1250 US gallons / 1040 Imperial gallons / 4731 Liters.	$9,111
4010-0078	1250 Gallon "R" Water Tank. Note: Any foam cell(s) and/or storage options thru the tank will reduce the overall water capacity. Tank capacity is 1250 US gallons / 1040 Imperial gallons / 4731 Liters.	$8,564
4010-0081	1030 Gallon "T" Water Tank. Note: Any foam cell(s) and/or storage options thru the tank will reduce the overall water capacity. Tank capacity is 1030 US gallons / 857 Imperial gallons / 3898 Liters. Includes modifications for 4x4 and plumbing applications as required.	$8,910
4010-0083	Fill tower locations. Water and Foam "A" fill towers to be located driver side of hosebed and Foam "B" fill tower to be located to officer side of hosebed.	$267
4010-0084	Special 1030 Gallon "T" Water Tank. Fill towers to be located inboard IPO outboard. Reference layout in file. Note: Any foam cell(s) and/or storage options thru the tank will reduce the overall water capacity. Tank capacity is 1030 US gallons / 857 Imperial gallons / 3898 Liters.	$7,620
4010-0090	530 Gallon "R" Water Tank Note: Any foam cell(s) will reduce the overall water capacity. Tank capacity is 530 US gallon / 441 Imperial gallons / 2006 Liters. For use with rear mounted pumps only.	$4,184
4010-0091	780 Gallon "R" Water Tank. Note: Any foam cell(s) and/or storage options thru the tank will reduce the overall water capacity. Tank capacity is 780 US gallon / 649 Imperial gallons / 2952 Liters. For use with rear mounted pumps only.	$5,034
4010-0092	1030 Gallon "R" Water Tank. Note: Any foam cell(s) and/or storage options thru the tank will reduce the overall water capacity. Tank capacity is 1030 US gallon / 857 Imperial gallons / 3898 Liters. For use with rear mounted pumps only.	$6,164
4010-0093	Fill tower locations. Water fill tower to be located driver side of hosebed and foam fill towers to be located inboard of water tower.	$267
4010-0097	780 Gallon "T" Water Tank. Note: Any foam cell(s) and/or storage options thru the tank will reduce the overall water capacity. Tank capacity is 780 US gallon / 649 Imperial gallons / 2952 Liters. Includes modifications for 4x4 and plumbing applications as required.	$7,156
4010-0098	1220 Gallon "R" Water Tank. Note: Any foam cell(s) and/or storage options thru the tank will reduce the overall water capacity. Tank capacity is 1220 US gallon / 1015 Imperial gallons / 4618 Liters.	$8,564
4010-0099	Fill tower(s) to be located offset to officer side of water tank.	$267
4010-0100	1530 Gallon "T" Water Tank. Note: Any foam cell(s) and/or storage options thru the tank will reduce the overall water capacity. Tank capacity is 1530 US gallons / 1273 Imperial gallons / 5791 Liters.	$9,728
4010-0101	1830 Gallon "T" Water Tank. Note: Any foam cell(s) and/or storage options thru the tank will reduce the overall water capacity. Tank capacity is 1830 US gallons / 1523 Imperial gallons / 6927 Liters.	$11,567
4010-0102	2030 Gallon "T" Water Tank. Note: Any foam cell(s) and/or storage options thru the tank will reduce the overall water capacity. Tank capacity is 2030 US gallons / 1690 Imperial gallons / 7684 Liters.	$12,792
4010-0117	Fill tower locations. Water fill tower to be located driver side of hosebed and foam fill tower to be located to officer side of hosebed.	$267
4010-0118	2030 Gallon Tandem "T" Water Tank. Note: Any foam cell(s) and/or storage options thru the tank will reduce the overall water capacity. Tank capacity is 2030 US gallons / 1690 Imperial gallons / 7684 Liters.	$14,015
4010-0119	1070 Gallon "T" Water Tank. Note: Any foam cell(s) and/or storage options thru the tank will reduce the overall water capacity. Tank capacity is 1070 US gallons / 890 Imperial gallons / 4050 Liters.	$7,404
4010-0120	2530 Gallon Tandem "T" Water Tank. Note: Any foam cell(s) and/or storage options thru the tank will reduce the overall water capacity. Tank capacity is 2530 US gallons / 2106 Imperial gallons / 9577 Liters.	$17,467
4010-0121	3030 Gallon Tandem "T" Water Tank. Note: Any foam cell(s) and/or storage options thru the tank will reduce the overall water capacity. Tank capacity is 3030 US gallons / 2523 Imperial gallons / 11469 Liters.	$20,919
4010-0125	1030 Gallon "R" Water Tank. Note: Any foam cell(s) and/or storage options thru the tank will reduce the overall water capacity. Tank capacity is 1030 US gallon / 857 Imperial gallons / 3898 Liters. Includes modifications for 4x4 and plumbing applications as required.	$8,607
4010-0128	820 Gallon "R" Water Tank. Note: Any foam cell(s) and/or storage options thru the tank will reduce the overall water capacity. Tank capacity is 820 US gallon / 682 Imperial gallons / 3104 Liters.	$6,094
4010-0129	1830 Gallon "T" Water Tank. Note: Any foam cell(s) and/or storage options thru the tank will reduce the overall water capacity. Tank capacity is 1830 US gallons / 1523 Imperial gallons / 6927 Liters.	$13,090
4010-0132	1730 Gallon "T" Water Tank. Note: Any foam cell(s) and/or storage options thru the tank will reduce the overall water capacity. Tank capacity is 1730 US gallons / 1440 Imperial gallons / 6548 Liters.	$12,375
4010-0133	1530 Gallon "T" Water Tank. Note: Any foam cell(s) and/or storage options thru the tank will reduce the overall water capacity. Tank capacity is 1530 US gallons / 1273 Imperial / 5791 Liters gallons. Includes modifications for 4x4 and plumbing applications as required.	$13,680
4010-0138	400 Gallon "R" Water Tank Note: Any foam cell(s) will reduce the overall water capacity. Tank capacity is 400 US gallon / 333 Imperial gallons / 1514 Liters.	$3,603
4010-0141	530 Gallon "T" Water Tank (no "T" section to officer side of tank). Note: Any foam cell(s) and/or storage options thru the tank will reduce the overall water capacity. Tank capacity is 530 US gallons / 441 Imperial gallons / 2006 Liters.	$5,726
4010-0143	780 Gallon "R" Water Tank. Note: Any foam cell(s) and/or storage options thru the tank will reduce the overall water capacity. Tank capacity is 780 US gallon / 649 Imperial gallons / 2952 Liters. Includes modifications for 4x4 and plumbing applications as required.	$7,071

4010-0145	650 Gallon "R" Water Tank. Note: Any foam cell(s) and/or storage options thru the tank will reduce the overall water capacity. Tank capacity is 650 US gallons / 541 Imperial gallons / 2460 Liters.	$4,709
4010-0146	580 Gallon "R" water tank. Foam cells reduce the base amount of water.	$5,179
4010-0147	1080 Gallon "R" Water Tank. Note: Any foam cell(s) and/or storage options through the tank will reduce the overall water capacity. Tank capacity is 1080 US gallon / 899 Imperial gallons / 4088 Liters.	$7,222
4010-0148	800 Gallon "R" Water Tank. Note: Any foam cell(s) and/or storage options thru the tank will reduce the overall water capacity. Tank capacity is 800 US gallons / 665 Imperial gallons / 3028 liters.	$7,132
4010-0149	1530 Gallon Tandem "T" Water Tank. Note: Any foam cell(s) and/or storage options thru the tank will reduce the overall water capacity. Tank capacity is 1530 US gallons / 1273 Imperial gallons / 5791 Liters.	$10,563
4010-0150	1030 Gallon "T" Water Tank. Includes driver side flush side for use with full depth compartments/tunnell. Note: Any foam cell(s) optioned will reduce the overall water capacity. Tank capacity is 1030 US gallon / 857 Imperial gallons / 3898 Liters.	$6,854
4010-0152	745 Gallon "R" Water Tank. Note: Any foam cell(s) and/or storage options thru the tank will reduce the overall water capacity. Tank capacity is 745 US gallon / 620 Imperial gallons / 2820 Liters.	$5,401
4010-0154	1530 Gallon "R" Water Tank. Note: Any foam cell(s) and/or storage options thru the tank will reduce the overall water capacity. Tank capacity is 1530 US gallon / 1273 Imperial gallons.	$10,238
4010-0156	2000 Gallon Tandem "T" Water Tank. Note: Any foam cell(s) and/or storage options thru the tank will reduce the overall water capacity. Tank capacity is 2000 US gallons / 1665 Imperial gallons / 7570 Liters.	$13,808
4010-0158	990 Gallon "R" Water Tank. Note: Any foam cell(s) and/or storage options through the tank will reduce the overall water capacity. Tank capacity is 990 US gallon / 824 Imperial gallons / 3747 Liters.	$6,618
4010-0159	Fill tower locations. The water and foam fill towers shall be relocated so they are centered left to right about the apparatus after the tanks have been loaded.	$267
4010-0174	530 Gallon "T" Water Tank. UPF Poly III color fill towers. Note: Any foam cell(s) will reduce the overall water capacity.	$5,171
4010-0175	530 Gallon "R" Water Tank UPF Poly III color fill towers. Note: Any foam cell(s) will reduce the overall water capacity.	$4,733
4010-0176	780 Gallon "T" Water Tank. UPF Poly III color fill towers. Note: Any foam cell(s) and/or storage options through the tank will reduce the overall water capacity.	$5,726
4010-0177	780 Gallon "R" Water Tank. UPF Poly III color fill towers. Note: Any foam cell(s) and/or storage options through the tank will reduce the overall water capacity.	$5,657
4010-0178	1030 Gallon "T" Water Tank. UPF Poly III color fill towers. Note: Any foam cell(s) and/or storage options through the tank will reduce the overall water capacity.	$7,128
4010-0179	1030 Gallon "R" Water Tank. UPF Poly III color fill towers. Note: Any foam cell(s) and/or storage options through the tank will reduce the overall water capacity.	$6,886
4010-0180	1280 Gallon "T" Water Tank. UPF Poly III color fill towers. Note: Any foam cell(s) and/or storage options through the tank will reduce the overall water capacity.	$9,111
4010-0181	1280 Gallon "R" Water Tank. UPF Poly III color fill towers. Note: Any foam cell(s) and/or storage options through the tank will reduce the overall water capacity.	$8,564
4010-0182	1530 Gallon "T" Water Tank. UPF Poly III color fill towers. Note: Any foam cell(s) and/or storage options through the tank will reduce the overall water capacity.	$10,944
4010-0183	530 Gallon "L" shaped Water Tank. UPF Poly III color fill towers. Includes lowered rear section for lower hose bed height. Note: Any foam cell(s) optioned will reduce the overall water capacity.	$7,626
4010-0184	780 Gallon "L" shape Water Tank. UPF Poly III color fill towers. Includes lowered rear section for lower hose bed height. Note: Any foam cell(s) optioned will reduce the overall water capacity.	$8,181
4010-0185	1030 Gallon "L" shape Water Tank. Includes lowered rear section for lower hose bed height. Note: Any foam cell(s) optioned will reduce the overall water capacity. UPF Poly III color fill towers.	$10,122
4010-0186	530 Gallon "R" Water Tank Note: Any foam cell(s) will reduce the overall water capacity. UPF Poly III color fill towers. For use with rear mounted pumps only.	$4,184
4010-0187	780 Gallon "R" Water Tank. UPF Poly III color fill towers. For use with rear mounted pumps only. Note: Any foam cell(s) and/or storage options thru the tank will reduce the overall water capacity.	$5,034
4010-0188	1030 Gallon "R" Water Tank. UPF Poly III color fill towers. For use with rear mounted pumps only. Note: Any foam cell(s) and/or storage options thru the tank will reduce the overall water capacity.	$6,164
4010-0189	1530 Gallon "T" Water Tank. UPF Poly III color fill towers - tanker version. Note: Any foam cell(s) and/or storage options thru the tank will reduce the overall water capacity.	$9,728
4010-0190	1830 Gallon "T" Water Tank. UPF Poly III color fill towers. Note: Any foam cell(s) and/or storage options thru the tank will reduce the overall water capacity.	$11,567
4010-0191	2030 Gallon "T" Water Tank. UPF Poly III color fill towers. Note: Any foam cell(s) and/or storage options thru the tank will reduce the overall water capacity.	$12,792
4010-0192	2030 Gallon Tandem "T" Water Tank. UPF Poly III color fill towers. Note: Any foam cell(s) and/or storage options thru the tank will reduce the overall water capacity.	$14,015
4010-0193	2530 Gallon Tandem "T" Water Tank. UPF Poly III color fill towers. Note: Any foam cell(s) and/or storage options thru the tank will reduce the overall water capacity.	$17,467
4010-0194	3030 Gallon Tandem "T" Water Tank. UPF Poly III color fill towers. Note: Any foam cell(s) and/or storage options thru the tank will reduce the overall water capacity.	$20,919

4010-0211	2900 Gallon Tandem "T" Water Tank. UPF Poly III color fill towers. Note: Any foam cell(s) and/or storage options thru the tank will reduce the overall water capacity. Tank capacity is 2900 US gallons / 2414 Imperial gallons / 10977 Liters.	$20,022
4010-0212	780 Gallon "R" Water Tank for 4x4 chassis. UPF Poly III with color fill towers. Note: Any foam cell(s) and/or storage options thru the tank will reduce the overall water capacity. Tank capacity is 780 US gallon / 649 Imperial gallons / 2952 Liters. Includes modifications for 4x4 and plumbing applications as required.	$7,071
4010-0213	530 Gallon "L" shaped Water Tank UPF Poly III color fill towers. Includes lowered rear section for lower hose bed height. Note: Any foam cell(s) optioned will reduce the overall water capacity. Tank capacity is 530 US gallon / 441 Imperial gallons / 2006 Liters.	$7,626
4010-0214	1030 Gallon "T" Water Tank. UPF Poly III color fill towers. Note: Any foam cell(s) and/or storage options through the tank will reduce the overall water capacity. Tank capacity is 1030 US gallons / 857 Imperial gallons / 3898 Liters. Includes modifications for 4x4 and plumbing applications as required.	$8,910
4010-0217	550 Gallon "R" Water Tank UPF Poly III color fill towers. Note: Any foam cell(s) will reduce the overall water capacity.	$5,064
4015-0002	Mechanical speed counter for Hale pumps.	$289
4015-0007	Pump cooler, 1/4" valve with 3/8" tubing.	$150
4015-0008	Zinc anodes for Hale pump (PR), (1) discharge side and (1) intake side.	$291
4015-0012	Pump shift override, side panel mounted.	$670
4015-0013	Fire Research ThrottleXcel engine throttle. Includes engine gauges.	$1,434
4015-0014	Thermal Relief Valve - Hale TRV120.	$749
4015-0015	Valve relief system, Hale TPM.	$3,354
4015-0016	Thermal relief valve, Hale TRVL-120.	$1,357
4015-0018	Valve Inlet MIV-E - Hale. Location: [#LOC].	$3,105
4015-0019	Valve inlet MIV-M, Hale. Location: [#LOC].	$2,663
4015-0020	Valve Monarch Manual - Waterous. Location: [#LOC].	$3,990
4015-0021	Valve Monarch Air Actuated - Waterous. Location: [#LOC]	$4,945
4015-0022	Mechanical pump seal - Hale.	$685
4015-0026	Electronic speed counter for Waterous pumps.	$285
4015-0027	Pump Shift Override Under L1 Compartment.	$670
4015-0029	Hale pressure relief valve.	$1,175
4015-0030	Waterous pressure relief valve.	$1,314
4015-0031	Valve Relief System - Dual TPM Required for pump rating 2250 GPM and above.	$3,969
4015-0033	Hale 2-Stage Power Operated Transfer Valve.	$1,557
4015-0035	Waterous 2-Stage electronic transfer valve.	$1,315
4015-0036	6" Additional Intake for 2250 GPM Pump.	$1,795
4015-0037	Engine throttle, vernier.	$326
4015-0039	Pump seal mechanical for Waterous pump.	$645
4015-0041	Valve Monarch Electric - Waterous. Location: [#LOC].	$5,061
4015-0042	Waterous Overheat Protection Manager.	$966
4015-0043	Anodes for Hale Cafspro Pump - (Pair) (1) Discharge side and (2) Intake Side	$437
4015-0044	Anodes for Waterous pump - (Pair) (1) discharge side and (1) intake side.	$353
4015-0045	Throttle Selection Switch on Pump Operator's Panel for Back-Up of Relief and Throttle System.	$496
4015-0046	Hale pump shift override.	$1,069
4015-0047	Additional Hale Primer Valve. Located: [#LOC].	$550
4015-0048	Pump Shift Override - driver's side under runningboard forward of runningboard tray if applicable.	$670
4015-0049	Extend Fire Pump Grease Zerks to Operator's Panel	$385
4015-0050	Relocate Primer to the Outside of the Frame Rail on Driver's Side	$85
4015-0051	Two 4.5" Steamers for Hale Qflo Pump	$684
4015-0054	Additonal Waterous Primer. Located: [#LOC].	$1,232
4015-0055	6" Additional Intake for Industrial	$1,937
4015-0056	Air operated master pump drain (upgrade).	$199
4015-0057	Special controls and regulator requirements for Seattle. Install RV-1 (Pressure Regulating Valve) going to pump shift to allow a max of 60 PSI on pump.	$373
4015-0058	Engine shut-down switch on pump panel. Includes coverered access.	$303
4015-0062	Primer indicator light shall be provided on the pump operator's panel, color to be red.	$104
4015-0063	TPM Relief Valve outlet to be extended to the side of truck under runningboard or compartment.	$258
4015-0064	Hale Auto Fill/Thief Inlet 2.5" Tank Fill "AutoFill" Automatic Tank Fill Valve Location: [#LOC].	$3,954
4015-0065	Schedule 40 Stainless steel piping	$1,092
4015-0066	Trident Pump Primer W/3 Barrel Push Button Control.	$977
4015-0068	6" intake valve Akron electric with relief. Location: [#LOC].	$3,297
4015-0069	MIV's, Pressure Relief and Atmospheric Relief (intake relief) to be plumbed to top of heat pan.	$139
4015-0070	WATEROUS OIL PRIMER	$65
4015-0071	Valve Relief Thermal - Hale TRVL-120 W/Audible Alarm	$1,371
4015-0072	6" Intake Valve Elkhart Electric UBEC1 Control with Releif. Location: [#LOC]	$3,297
4015-0074	Manual remote operated master pump drain. The master drain control shall be clearly marked and placed in accessible location on driver side pump panel.	$293

4015-0075	Pump Seal Mechanical - Hale. For use with Tradition Hale pumps.	$2,127
4015-0077	Pump shift override location on officer side panel in place of standard.	$141
4015-0080	6" Cap Vented "IPOS"	$15
4015-0081	Hale Semi-Automatic Priming push-button control.	$457
4015-0082	Electric Over Air Actuation Pump Cooler Valve	$397
4015-0083	Electric Over Air Actuation Engine Cooler Valve	$255
4015-0084	Pump Air Blow Out with 1/4 Snubber Vavlve.	$227
4015-0085	Auto Tank to Pump Operation. When Switched to Automatic Mode, The Tank Valve will Close When Suction Pressure Reaches 15 PSI & Opens When Suction PressureI Drops Below 15 PSI.	$1,679
4015-0086	Pump Cooler 1/4 Turn Valve	$238
4015-0087	Engine Cooler 1/4 Turn Valve	$238
4015-0088	Portable/Qmax Pump Shall be with Manifold and check valves for Front Bumper Turret and Ground Sweep. To be use dearing Pump&Roll operation.	$820
4015-0089	Extend exhaust pipe from dunnage pan mounted portable pump in line with main exhaust system using stainless steel flexible pipe.	$108
4015-0090	Akron Test Port for Master Gauges	$86
4015-0091	Pump cooler with .75" 1/4 turn valve.	$270
4015-0092	Hale Fill Thieft Steamers to be Flush + 2 Location [#LOC]	$1,450
4015-0103	Fuel cooler to have .375 tubing for a max of 20 GPM water flow.	$77
4015-0105	All Stainless Steel piping is to be constructed of 316L stainless steel.	$1,578
4015-0106	All flanges on plumbing larger that 2" shall have welded flanges where possible. Threaded connections are acceptable for 2" and smaller plumbing.	$1,080
4015-0107	Plated or Stainless Steel fastners on all plumbing and the plumbing system.	$982
4015-0108	Valve Relief Thermal - Hale TRVL-120	$810
4015-0109	Galvanized Victaulic Coupling. All Victaulic couplings shall galvanized.	$197
4015-0110	Valve Monarch Manual with Akron Intake Relief- Waterous. Location: [#LOC]	$2,771
4015-0111	Ferrell Compression Fittings for all Plastic Tubing in the Pump module plumbing.	$606
4015-0113	Auto Discharge Pressure Relief Valve Preset at 125psi for Pump&Roll.	$2,311
4015-0125	Red Switch Cover on Master Drain Switch.	$11
4015-0126	Hale PTO/MIDSHIP 250GPM to 1000gpm Pump Pressure Relief Valve	$2,079
4015-0127	Fire Research Infinity vernier type engine throttle.	$627
4015-0129	Waterous Overheat Protection Manager with audible alarm.	$909
4015-0130	Additional Trident Primer Valve, Located: [#LOC].	$329
4015-0131	Hale AnodePro Kit (3) Anodes with Flange. One on each suction tube and one anode on the discharge located as close to the center of the pump as possible.	$1,026
4015-0133	Anode for Darley pump - (1) intake side.	$381
4015-0134	Class 1 Engine Twister throttle, vernier	$793
4015-0135	Mechanical speed counter for pumps.	$351
4015-0136	Mechanical Darley pump seal.	$960
4015-0137	Valve Monarch Manual with Indicator lights - Waterous. Location: [#LOC].	$4,760
4015-0138	6" Inlet Valve Manual Gear Operated with Relief. Location: [#LOC].	$2,687
4015-0139	Darley Pump Overheat Thermal relief valve shall be provided with a light located on pump operator's panel.	$682
4015-0144	Manual remote operated master pump drain. The master drain control shall be clearly marked and placed in accessible location rearward below running board on driver side or L1 compartment.	$293
4015-0146	Four (4) 6.0'' diameter suction inlet ports with 6'' NST male threads and removable screens shall be provided, on left side.	$1,937
4015-0149	Four (4) 6.0'' diameter suction inlet ports with 6'' NST male threads and removable screens shall be provided, two (2) left side, and two (2) right side..	$1,937
4015-0150	Darley pump shift override.	$670
4015-0152	Hale pump shift override. Pump shift to be recess behind pump operator pump panel with door.	$1,300
4015-0155	Manual remote operated master pump/pump transmission cooler drain. The master drain control shall be clearly marked and placed in accessible location under driver side pump panel or L1 compartment.	$293
4015-0157	Waterous 2-Stage Electric Transfer Valve Manual Override locate drive side pump panel.	$246
4015-0159	Valve Inlet MIV-E - Hale. Location: [#LOC].	$3,105
4015-0160	Pump Shift Override Under R1 Compartment	$670
4015-0163	Customer supply existing midship pump shall be reused on new chassis.	$5,951
4015-0164	Factory Pump Test.	$426
4015-0166	Pump cooler, automatic with 3/8" tubing. Include a check valve that is install between the pump discharge and tank that will automatically close when drafting.	$130
4015-0172	Primer indicator light shall be provided on the pump operator's panel, color to be red. The indicator light shall be upgraded to a LED indicator light IPOS.	$158
4015-0175	Additional control and air bleeder for the MIV-E to provide controls at: [#LOC].	$499
4020-0001	Additional tank sump.	$289
4020-0002	Dump Valve Mounting Plate	$531
4020-0003	Jet Dump	$531
4020-0004	Newton dump mounting plate.	$506

4020-0005	Fill Tower(s) to extend 6" above body.	$348
4020-0006	Direct 1.0" Water Tank Fill with Akron Valve Terminate with .75 Hose Bib. Location: driver side pump panel	$727
4020-0007	1.5" Tank Drain Akron Manual Valve with pull cable control at left pump panel. Valve shall be located at the tank sump and extend plumbing below frame rail.	$763
4020-0008	Water Overflow Pipe to be cut down an additional 3".	$138
4020-0009	Water fill tower to have a butterfly latch.	$166
4020-0010	Fill Tower Lids to be hinged as follows: Water Fill Tower to be hinged to front and Foam Fill Tower to be hinged to rear. Add black rubber gasket material to foam fill tower to ensure proper seal.	$384
4020-0011	Notch officer side water tank (overall tank capacity will be reduced for application). Notch to allow 2.5" rear diacharge to be routed down low to rear of unit. Discharge to be positioned towards lower area of ladder tunnel access door (height only).	$1,396
4020-0012	Vision Mark tags for water and foam fill towers ipos tags.	$69
4020-0013	Sight Level Water Gauge form into front of water tank, as a part of the tank.	$183
4020-0015	Rear tank dump. Includes painted steel assembly with manually actuated valve on driver side of dump assembly. Includes integral manual extension chute.	$2,061
4020-0016	Rear tank dump. Includes stainless steel assembly with manually actuated valve on driver side of dump assembly. Includes integral manual extension chute.	$2,506
4020-0017	Rear tank dump. Includes stainless finish steel assembly with electically actuated valve and integral manual extension chute.	$3,237
4020-0018	Rear tank dump. Includes painted steel assembly with manually actuated valve on top of dump assembly. For use with slip on extension and chute.	$1,241
4020-0019	Rear tank dump. Includes stainless steel assembly with manually actuated valve on top of dump assembly. For use with slip on extension and chute.	$1,496
4020-0020	Rear tank dump. Includes stainless steel assembly with electrically actuated valve. For use with slip on extension and chute.	$2,222
4020-0021	Rear tank dump. Includes painted steel assembly with manually actuated valve on top of dump assembly. Includes integral swivel chute with manual telscopic extension.	$3,080
4020-0022	Rear tank dump. Includes stainless steel assembly with manually actuated valve on top of dump assembly. Includes integral swivel chute with manual extension.	$4,459
4020-0023	Rear tank dump. Includes mild finish steel assembly with manually actuated valve on driver side of dump assembly. Includes integral electric extension chute.	$3,150
4020-0024	Rear tank dump. Includes stainless finish steel assembly with electrcially actuated valve. Includes integral manual extension chute.	$3,470
4020-0025	Rear tank dump. Includes stainless steel assembly with electrically actuated valve and integral electrical extension chute.	$4,462
4020-0027	Slip-on stainless steel dump extension and chute. Includes beavertail mounted removable support arm bracket and tailboard mounted storage tray (directly below dump) with retaining straps.	$1,545
4020-0028	Slip-on mild finish dump extension and chute. Includes (1) beavertail mounted removable support arm bracket and tailboard mounted storage tray (directly below dump) with retaining straps.	$1,193
4020-0029	Driver and officer side tank dumps. Includes stainless steel assembly with electrically actuated valve and integral electrical extension chute.	$7,690
4020-0030	Driver and officer side tank dumps. Includes painted steel assembly with electically actuated valve and integral electrical extension chute.	$5,632
4020-0031	Fill Tower(s) to be 24" tall due to the ROM hosebed cover and to be located 27" off front of the tank due to drum of ROM hosebed cover.	$267
4020-0032	Dealer supplied dump extension, chute, and items for storage in or on the body. To be provided by E-ONE will be (1) support arm bracket and (2) mount points on trailing end of beavertails (support arm bracket to be shipped loose).	$223
4020-0038	Rear tank dump. Includes mild finish steel assembly with manually actuated valve on top of dump assembly. Includes integral manual extension chute.	$2,061
4020-0039	Rear tank dump. Includes painted steel assembly with electric actuated valve and integral electric extension chute.	$3,285
4020-0041	Additional Dump valve/extension switching location in Cab Map Box/Over head panel.	$348
4020-0045	Notch officer side water tank (overall tank capacity will be reduced for application). Notch to allow for a 2.5" hosebed discharge to be routed into the hosebed on officer side.	$375
4020-0046	Notch driver/officer side water tank (overall tank capacity will be reduced for application). Notch to allow for hosebed discharge to be routed into the hosebed.	$375
4020-0050	OBSOLETE: Switch guarded half moon. Location on electrical Newton dump and Newton dump ext chute switches.	$25
4020-0054	Rear tank dump. Includes painted steel assembly with electric actuated valve on top of dump assembly. Includes integral swivel chute with manual extension.	$4,495
4020-0056	Tank sleeve for rear discharge.	$246
4020-0059	Rear tank dump. Includes painted steel assembly with electrically actuated valve. For use with slip on extension and chute.	$1,746
4020-0062	Water tank fill tower to be approximately 8" tall IPOS.	$159
4020-0063	Tank sump dump box (1) each side for newton dump mounting.	$288

4020-0064	Tank sump dump box (1) at rear for newton dump mounting.	$288
4020-0065	Notch driver side water tank (overall tank capacity will be reduced for application). Notch to allow for a 2.5" hosebed discharge to be routed into the hosebed on driver side.	$375
4020-0066	Notch driver side water tank (overall tank capacity will be reduced for application). Notch to allow a booster reel to be mounted in hosebed storage pan.	$375
4020-0067	Water Tank Notch for ladder storage above tank for (1) stokes basket.	$525
4030-0041	Turret bumper Akron Fire Fox ARFF.	$10,449
4030-0046	TFT Tornado RC Bumper Turret with Joystick. [#LOC].	$10,690
4030-0051	TFT Tornado RC Bumper Turret with Panel Control. [#LOC].	$10,690
4030-0073	Front bumper turret, Akron Forestry 3462 with a 3293 low flow adjustable nozzle. Include 6035 Joystick, 2" electric valve, and quick disconnect. [#LOC].	$9,371
4100-0000	10 gallon integral foam tank for [#LOC]. Foam tank capacity will reduce the water tank capacity.	$874
4100-0006	40 gallon integral foam tank for [#LOC]. Foam tank capacity will reduce the water tank capacity. Tank capacity is 40 US gallon / 33 Imperial gallons / 151 Liters.	$1,110
4100-0007	15 gallon integral foam tank for [#LOC]. Foam tank capacity will reduce the water tank capacity. Tank capacity is 15 US gallon / 12 Imperial gallons / 56 Liters.	$909
4100-0008	20 gallon integral foam tank for [#LOC]. Foam tank capacity will reduce the water tank capacity. Tank capacity is 20 US gallon / 16 Imperial gallons / 75 Liters.	$940
4100-0009	30 gallon integral foam tank for [#LOC]. Foam tank capacity will reduce the water tank capacity. Tank capacity is 30 US gallon / 25 Imperial gallons / 113 Liters.	$1,019
4100-0012	280 gallon integral foam tank for [#LOC]. Foam tank capacity will reduce the water tank capacity. Tank capacity is 280 US gallon / 233 Imperial gallons / 1059 Liters.	$3,834
4100-0013	50 gallon integral foam tank for [#LOC]. Foam tank capacity will reduce the water tank capacity. Tank capacity is 50 US gallon / 41 Imperial gallons / 189 Liters.	$1,191
4100-0014	150 gallon integral foam tank for [#LOC]. Foam tank capacity will reduce the water tank capacity. Tank capacity is 150 US gallon / 124 Imperial gallons / 567 Liters.	$3,073
4100-0015	25 gallon integral foam tank for [#LOC]. Foam tank capacity will reduce the water tank capacity. Tank capacity is 25 US gallon / 20 Imperial gallons / 94 Liters.	$979
4100-0016	100 gallon integral foam tank for [#LOC]. Foam tank capacity will reduce the water tank capacity.	$2,213
4100-0017	10 gallon external foam tank. Locate in storage pan. Tower to be next to water fill tower.	$1,388
4100-0018	80 gallon integral foam tank for [#LOC]. Foam tank capacity will reduce the water tank capacity. Tank capacity is 80 US gallon / 66 Imperial gallons / 302 Liters.	$1,771
4100-0020	60 gallon integral foam tank for [#LOC]. Foam tank capacity will reduce the water tank capacity. Tank capacity is 60 US gallon / 50 Imperial gallons / 227 Liters.	$1,428
4100-0021	30 imperial gallon integral foam tank for [#LOC]. Foam tank capacity will reduce the water tank capacity.	$1,110
4100-0022	180 gallon integral foam tank for [#LOC]. Foam tank capacity will reduce the water tank capacity. Tank capacity is 180 US gallon / 149 Imperial gallons / 681 Liters.	$3,588
4100-0023	300 gallon integral foam tank for class [#LOC] foam. Foam tank capacity will reduce the water tank capacity. Tank capacity is 300 US gallon / 249 Imperial gallons / 1135 Liters.	$3,630
4100-0024	70 gallon integral foam tank for [#LOC]. Foam tank capacity will reduce the water tank capacity. Tank capacity is 70 US gallon / 58 Imperial gallons.	$1,550
4100-0025	600 gallon integral foam tank for [#LOC]. Foam tank capacity will reduce the water tank capacity. Tank capacity is 600 US gallons / 499 Imperial gallons / 2271 Liters.	$8,217
4100-0026	1030 gallon foam tank for [#LOC]. Tank capacity is 1030 US gallons / 857 Imperial gallons / 3898 Liters.	$7,128
4100-0031	250 gallon integral foam tank for [#LOC]. Foam tank capacity will reduce the water tank capacity. Tank capacity is 250 US gallon / 208 Imperial gallons / 946 Liters.	$3,424
4100-0033	30 gallon integral foam tank for [#LOC]. UPF Poly III [#COL] fill tower. Foam tank capacity will reduce the water tank capacity.	$1,019
4100-0034	10 gallon integral foam tank for [#LOC]. UPF Poly III [#COL] fill tower. Foam tank capacity will reduce the water tank capacity.	$874
4100-0035	20 gallon integral foam tank for [#LOC]. UPF Poly III [#COL] fill tower. Foam tank capacity will reduce the water tank capacity.	$940
4100-0036	40 gallon integral foam tank for [#LOC]. UPF Poly III [#COL] fill tower. Foam tank capacity will reduce the water tank capacity.	$1,110
4100-0037	50 gallon integral foam tank for [#LOC]. UPF Poly III [#COL] fill tower. Foam tank capacity will reduce the water tank capacity.	$1,191
4100-0038	100 gallon integral foam tank for [#LOC]. UPF Poly III [#COL] fill tower. Foam tank capacity will reduce the water tank capacity.	$2,213
4100-0039	1030 gallon integral foam tank for [#LOC]. UPF Poly III [#COL] fill tower.	$7,128
4100-0047	1030 gallon integral foam tank for [#LOC]. UPF Poly III [#COL] fill tower.	$7,128
4100-0050	1000 gallon integral foam tank for [#LOC]. UPF Poly III [#COL] fill tower.	$7,128
4100-0052	500 Gallon integral foam tank for [#LOC]. UPF Poly III [#COL] fill tower. The fill tower shall include a an expansion dome. Foam tank capacity will reduce the water tank capacity. Tank capacity is 500 US gallons / 416 Imperial gallons / 1892 Liters.	$6,849
4100-0053	30 Gallon external foam tank for [#LOC]. UPF Poly III [#COL]. Locate in storage pan.	$3,045

4110-0002	Foam tank (B) outlet. Includes 1" male adapter and connector (ship loose). Outlet location: [#LOC].	$865
4110-0003	Stainless steel foam can piercer for bottom of foam fill tower. Requires foam fill to be 16" X 16" wide.	$848
4110-0004	Foam tank shutoff. 1/4 turn shut off on each connection to the foam tank - foam discharge, refill and sending unit. The Valves shall be located at the tank.	$676
4110-0005	Direct 1.5" Foam Tank Fill with Akron 1.5" Valve. A 1.5" FNST tank fill connection with rocker lug plug, and a replaceable .25" mesh strainer on the left pump panel.	$682
4110-0006	Foam tank outlet. Includes 1" male adaptor and connector (ship loose). Outlet location: [#LOC]	$864
4110-0011	1.5" Foam tank drain Akron manual valve.	$632
4110-0013	Foam tank outlet. Includes 1.5" MNST with cap. A 1.5" FNST fitting shall be included in the loose equipment . Outlet location: [#LOC].	$948
4110-0014	Foam tank (B) outlet. Includes 2" male adapter. Outlet location: [#LOC].	$1,251
4110-0015	Foam tank outlet. Includes 1" Female adaptor and connector (ship loose). Outlet location: [#LOC].	$864
4405-0017	Booster Reel. Reel to have capacity of 200' of 1" (not included). Includes (reel side) stirrup style rewind switch. Locate [#LOC].	$2,457
4405-0020	Booster Reel. Reel to have capacity of 200' of 1" (not included). Includes stirrup style rewind switch. Locate rear body compartment.	$2,645
4405-0021	Booster reel - front bumper. Center between frame rails. Will hold 100' of 1'' or 150' of 3/4'' booster hose.	$5,699
4405-0022	Hannay electric rewind booster reel that shall hold 250' of 1" booster hose. (Hose not included.)	$2,486
4405-0026	Booster Reel Aluminum shall hold 100' of 1" or 150' of .75" Hose Reel installed in [#LOC] A rewind switch shall be provided at the reel.	$2,442
4405-0036	Booster Reel. Reel to have capacity of 200' of 1" (not included). Includes rewind switch on wall adjacent to reel. Locate rear upper body compartment.	$2,645
4405-0041	Booster Reel. Reel to have capacity of 200' of 1.5" (not included). Locate [#LOC].	$2,622
4405-0042	Booster Reel. Reel to have capacity of 200' of 1.5" (not included). Includes stirrup style rewind switch. Locate rear body compartment.	$2,811
4405-0043	(1) booster reel to hold up to 300' of .75" hose (not included). Includes rollers mounted on reel side of the module and foot mounted rewind switch below the rearward side of the runningboard. Locate [#LOC].	$3,016
4405-0044	Booster Reel. Reel to have capacity of 200' of 1" (not included). Includes rewind switch on officer side wall adjacent to reel. Locate rear body compartment.	$2,645
4405-0045	Booster Reel. Reel to have capacity of 200' of 1" (not included). Locate [#LOC].	$2,457
4405-0046	Booster Reel. Reel to have capacity of 100' of 1" (not included). Includes rewind switch located on bottom of adjustable shelf on far right side corner. Locate rear body compartment offset to officer side as far as possible.	$2,442
4405-0047	Drop down booster reel mounted roller assembly. For use with rear compartment mounted booster reel.	$327
4405-0048	Booster Reel. Reel to have capacity of 200' of 1" (not included). Locate rear body compartment. Includes rewind switch on driver side wall adjacent to reel.	$2,645
4405-0049	Booster Reel. Reel to have capacity of 200' of 1 hose with 1/2hp motor.	$2,721
4405-0051	Booster reel to hold up to 300' of 1" hose (not included) locate on officer side of dunnage storage pan.	$3,016
4405-0052	Hose Reel Dry 300'X1.75 Hose	$1,691
4405-0054	Hose Reel Dry for 250' X 1.75 Collapsible Hose	$1,658
4405-0055	Booster Reel. Reel to have capacity of 150' of 1" (not included). Locate [#LOC]. Includes body/beavertail mounted rewind switch located to outboard side of reel location.	$2,457
4405-0058	Booster Reel. Reel to have capacity of 150' of 1" (not included). Locate rear body compartment.	$2,457
4405-0060	Booster reel Akron Elect valve with a 9315 controller to read pressure only- Behind Front of Cab. Center between frame rails. To hold 100' of 1''	$5,896
4405-0061	Akron Booster reel - front bumper. Center between frame rails. Will hold 150' of 1'' or 250' of 3/4'' booster hose.	$6,093
4405-0064	Booster Reel Akron Model ERWB-16=28. Includes stirrup style rewind switch. Locate rear body compartment. "Hose Not Included" Capacity; up to 150' of .75" or 100' of 1" redline.	$2,645
4405-0065	Booster Reel. Reel to have capacity of 200' of 1" with Electric Valve Control (hose not included). Locate rear body compartment.	$3,135
4405-0066	Booster Reel. Reel to have capacity of 150' of 1" (not included). Locate rear body compartment.	$2,457
4405-0077	Booster Hose Reel 12 Volt. Shall hold 200' of .75" Booster Hose (Hose not included) Includes stirrup style rewind switch installed in [#LOC]	$2,458
4405-0078	Booster Reel with 1.5" Air Actuated Valve control at operator panel. Reel to have capacity of 200' of 1" (not included). Locate rear body compartment.	$2,645
4405-0081	Booster Reel. Reel to have capacity of 150' of 1" (not included). Locate officer side of pan.	$2,457
4405-0083	Booster Reel Akron. Reel to have the capacity of 250' of 3/4 of redline. Includes rewind switch locate next to reel. Locate rear body compartment. "Hose Not Included".	$2,410
4405-0085	Booster Reel Riser for rollers. Locate (1) left, and (1) right side on hose reel pan.	$159
4405-0090	Booster Reel with air actuated control at pump operator panel. Shall hold 200' of 1" Booster Hose (Hose not included) installed in [#LOC]	$2,349

4405-0093	Booster Reel. Reel to have capacity of 200' of 1" (not included). Includes rewind switch mounted on the exterior of compartment (rear body) on the officer's side. Locate reel in the rear body compartment.	$2,645
4405-0095	Booster Hose Reel 12 Volt located on the floor of B1. Shall hold 200' of .75" Booster Hose (Hose not included). Includes rewind switch officers side of B1 wall close to opening for easy accessability.	$2,458
4405-0096	The booster reel manual crank shall have the crank handle extended an additional 12" beyond standard length.	$87
4405-0097	Booster Reel Aluminum shall hold 200' of 1" flat lay Hose. installed in [#LOC] A rewind switch shall be provided at the reel.	$2,442
4405-0098	Booster Reel 100' X 1" less hose, blow out valve included, model EF4026-19-20-8. Located: [#LOC].	$2,454
4405-0100	Booster cord reel rewind switch. Switch located [#LOC].	$106
4405-0104	Booster Reel. Reel to have capacity of 100' of 1" (not included). Includes rewind switch installed in [#LOC] for Dry Chemical.	$2,442
4405-0106	Air actuated 1.5" valve and with pump panel mounted controller. For use with dealer installed booster reel and roller assembly in B1. Includes air blow-out.	$1,160
4405-0107	Booster Reel. Reel to have capacity of 200' of 1" (not included). Includes rewind switch on wall adjacent to reel. Locate rear body compartment.	$2,645
4415-0008	1.5" front bumper discharge Akron manual valve.	$1,423
4415-0009	1.5" Front Bumper Discharge Hale Manual Valve	$1,518
4415-0010	1.5" Front Bumper Discharge Akron Electric Valve	$2,937
4415-0011	2.5" Front Bumper Discharge Akron Electric Valve	$3,080
4415-0012	1.5" crosslay with Akron manual valve. Location: [#LOC].	$885
4415-0014	2.5" Left Pump Panel Discharge Akron Manual Valve. Location: [#LOC].	$922
4415-0015	2.5" Left Panel Discharge Hale Manual Valve. Location: [#LOC]	$1,200
4415-0016	2.5" Right Pump Panel Discharge Akron Manual Valve. Location: [#LOC].	$1,026
4415-0017	2.5" Right Pump Panel Discharge Hale Manual Valve. Location: [#LOC]	$1,302
4415-0018	2.5" left front hose bed discharge Akron manual valve.	$1,334
4415-0019	2.5" Left Front Hosebed Discharge Hale Manual Valve	$1,559
4415-0020	2.5" right front hose bed discharge Akron manual valve.	$1,334
4415-0021	2.5" Right Front Hosebed Discharge Hale Manual Valve	$1,559
4415-0022	2.5" Left Rear Discharge Akron Manual Valve. Location: [#LOC].	$1,078
4415-0023	2.5" Left Rear Discharge Hale Manual Valve Location: [#LOC]	$1,302
4415-0025	2.5" Left Rear Discharge Akron Electric Valve	$1,390
4415-0028	2.5" Right Rear Discharge Akron Manual Valve. Location: [#LOC].	$1,078
4415-0029	2.5" Right Rear Discharge Hale Manual Valve Location: [#LOC]	$1,302
4415-0030	2.5" Right Rear Rearmount Discharge Akron Manual Valve	$1,390
4415-0033	3" Left Pump Panel Top mount Discharge Akron Manual Valve (Waterous pumps noted location to be forward lower port) Location: [#LOC]	$1,579
4415-0034	3" Right Pump Panel Discharge Akron Manual Valve (Waterous pumps noted location to be forward lower port). Location: [#LOC].	$1,482
4415-0035	3" Right Pump Panel Discharge Hale Manual Valve Location: [#LOC]	$1,818
4415-0036	3" Left Front Hose Bed Discharge Akron Manual Valve.	$1,937
4415-0037	3" Right Front Hose Bed Discharge Akron Manual Valve.	$1,937
4415-0038	3" Left Rear Discharge Akron Manual Valve. Location: [#LOC].	$1,667
4415-0039	3" Right Rear Discharge Akron Manual Valve. Location: [#LOC].	$1,667
4415-0041	3" Deck Gun Discharge, Akron manual valve.	$1,512
4415-0049	4" Pump Panel Discharge Hale Electric Valve Location: [#LOC]	$5,228
4415-0050	4" Pump Panel Discharge Akron Electric Valve (Waterous pumps noted location to be forward lower port). [#LOC]	$4,237
4415-0051	4" Waterway Discharge with 3" Akron Manual Valve.	$2,055
4415-0052	4" Waterway Discharge with 4" Akron Electric Valve	$4,238
4415-0053	4" Waterway Discharge with 3" Akron Electric Valve	$3,543
4415-0054	4" Right Pump Panel Discharge with 3" Akron Manual Valve (Waterous pumps noted location to be forward lower port). Location: [#LOC].	$1,744
4415-0055	4" Left Rear Discharge Akron Electric Valve	$4,489
4415-0056	4" Rear Discharge with Akron Electric Valve. Rear Mount application. Locate to [#LOC] of rear steamer.	$4,237
4415-0057	5" Right Pump Panel Discharge with 3" Akron Manual Valve. Location: [#LOC].	$2,419
4415-0058	2.5" Crosslay Akron Manual Valve. Location: [#LOC].	$1,068
4415-0063	1.5" Double Speedlay with Hale Manual Valve for ERV	$2,084
4415-0064	1.5" Double Speedlay with Akron Manual Valve for ERV	$2,084
4415-0065	1.5" Double Speedlay with Akron Manual Valves.	$1,736
4415-0066	1.5" Triple Speedlay with Akron manual valve.	$2,726
4415-0067	1.5" left front hose bed preconnect Akron manual valve.	$922
4415-0068	1.5" right front hose bed preconnect Akron manual valve.	$922
4415-0071	1.5" Left Rear Discharge Akron Manual Valve. Location: [#LOC].	$973
4415-0072	1.5" Right Rear Discharge Akron Manual Valve. Location: [#LOC].	$973
4415-0073	Triple Speedlay (2) 1.5" and (1) 2.5" with Akron Manual Valve.	$3,890

4415-0075	2.5" Rear Driver's Side Preconnect Akron Manual Valve for Rear Mount	$1,909
4415-0077	Discharge Package (3) 2.5" with Akron Manual Valves and (1) 3" with Akron Manual Valve. For use with rear mounted pump.	$6,406
4415-0078	3" Deck Gun Discharge Akron Electricl Valve Body Front for Rear Mount	$6,902
4415-0079	3" Deck Gun Discharge Akron Manual Valve Body Rear for Rear Mount	$3,776
4415-0085	1.5" Crosslay w/2" Akron Electric Valve Location: [#LOC]	$2,583
4415-0086	2.5" Crosslay w/Akron Electric Valve. To be located rearward of 1.5" crosslay(s) if applicable. Location: [#LOC].	$2,969
4415-0088	1.5" Crosslay w/2" Akron Electric Valve & Navigator 9305 Location: [#LOC]	$4,834
4415-0089	2.5" Crosslay w/Akron Electric Valve & Navigator 9305. To be located rearward of 1.5" crosslay(s) if applicable. Location: [#LOC]	$5,616
4415-0093	Double 1.5" Speedlay w/2" Akron Electric Valves	$5,178
4415-0094	Triple 1.5" Speedlay w/2" Akron Electric Valves	$7,883
4415-0096	Double 1.5" Speedlay w/2" Akron Electric Valves & Navigator 9305	$9,599
4415-0097	Triple 1.5" Speedlay w/2" Akron Electric Valves & Navigator 9305	$14,538
4415-0098	Triple (2) 1.5" & (1) 2.5" Speedlays w/(2) 2" & (1) 2.5" Akron Electric Valves & Navigator 9305	$16,498
4415-0099	3" Deck Gun Discharge Akron Electric Valve	$3,482
4415-0100	3" Deck Gun Discharge Akron Electric Valve & Navigator 9305	$6,197
4415-0102	1.5" Front Bumper Discharge Akron Electric Valve & Navigator 9305	$5,394
4415-0104	2.5" Front Bumper Discharge Akron Electric Valve & Navigator 9305	$6,262
4415-0106	1.5" Left Front Hosebed w/2" Akron Electric Valve	$2,641
4415-0107	2.5" Left Front Hosebed Akron Electric Valve	$3,239
4415-0108	3" Left Front Hosebed Akron Electric Valve	$3,909
4415-0109	1.5" Left Front Hosebed w/2" Akron Electric Valve & Navigator 9305	$4,893
4415-0110	2.5" Left Front Hosebed Akron Electric Valve & Navigator 9305	$5,959
4415-0111	3" Left Front Hosebed Akron Electric Valve & Navigator 9305	$6,623
4415-0115	1.5" Right Front Hosebed w/2" Akron Electric Valve	$2,641
4415-0116	2.5" Right Front Hosebed Akron Electric Valve	$3,239
4415-0117	3" Right Front Hosebed Akron Electric Valve	$3,909
4415-0118	1.5" Right Front Hosebed w/2" Akron Electric Valve & Navigator 9305	$4,893
4415-0119	2.5" Right Front Hosebed Akron Electric Valve & Navigator 9305	$5,959
4415-0120	3" Right Front Hosebed Akron Electric Valve & Navigator 9305	$6,623
4415-0124	2.5" Left Pump Panel Discharge Akron Electric Valve. Location: [#LOC]	$2,828
4415-0125	2.5" Left Pump Panel Discharge Akron Electric Valve & Navigator 9305. Location: [#LOC]	$5,548
4415-0127	2.5" Right Pump Panel Discharge Akron Electric Valve Location: [#LOC]	$2,828
4415-0128	3" Right Pump Panel Discharge Akron Electric Valve (Waterous pumps noted location to be forward lower port) Location: [#LOC]	$3,455
4415-0129	4" Right Pump Panel Discharge w/3" Akron Electric Valve (Waterous pumps noted location to be forward lower port) Location: [#LOC]	$3,716
4415-0130	5" Right Pump Panel Discharge w/3" Akron Electric Valve Location: [#LOC]	$4,389
4415-0131	2.5" Right Pump Panel Discharge Akron Electric Valve & Navigator 9305 Location: [#LOC]	$5,548
4415-0132	3" Right Pump Panel Discharge Akron Electric Valve & Navigator 9305 (Waterous pumps noted location to be forward lower port) Location: [#LOC]	$6,165
4415-0133	4" Pump Panel Discharge Akron Electric Valve & Navigator 9305 Location: [#LOC]	$7,481
4415-0134	4" Right Pump Panel Discharge w/3" Akron Electric Valve & Navigator 9305 Location: [#LOC]	$6,428
4415-0135	5" Right Pump Panel Discharge w/3" Akron Electric Valve & Navigator 9305 Location: [#LOC]	$7,103
4415-0140	1.5" Left Rear Discharge Akron Electric Valve Location: [#LOC]	$2,693
4415-0141	2.5" Left Rear Discharge Akron Electric Valve Location: [#LOC]	$2,985
4415-0142	3" Left Rear Discharge Akron Electric Valve Location: [#LOC]	$3,638
4415-0143	1.5" Left Rear Discharge Akron Electric Valve & Navigator 9305 Location: [#LOC]	$4,945
4415-0144	2.5" Left Rear Discharge Akron Electric Valve & Navigator 9305 Location: [#LOC]	$5,703
4415-0145	3" Left Rear Discharge Akron Electric Valve & Navigator 9305 Location: [#LOC]	$6,351
4415-0149	1.5" Right Rear Discharge Akron Electric Valve Location: [#LOC]	$2,693
4415-0150	2.5" Right Rear Discharge Akron Electric Valve Location: [#LOC]	$2,985
4415-0151	3" Right Rear Dicharge Akron Electric Valve Location: [#LOC]	$3,638
4415-0152	1.5" Right Rear Discharge Akron Electric Valve & Navigator 9305 Location: [#LOC]	$4,945
4415-0153	2.5" Right Rear Discharge Akron Electric Valve & Navigator 9305 Location: [#LOC]	$5,703
4415-0154	3" Right Rear Discharge Akron Electric Valve & Navigator 9305 Location: [#LOC]	$6,351
4415-0158	3" Left Panel Discharge Top Mount Akron Manual Valve w/30 Degree Droop. (Waterous pumps noted location to be forward lower port.) Location: [#LOC].	$1,868
4415-0159	3" Left Panel Discharge Top Mount Akron Electric Valve (Waterous pumps noted location to be forward lower port) Location: [#LOC]	$3,551
4415-0160	3" Left Panel Discharge Top Mount Akron Electric Valve w/30 Degree Droop (Waterous pumps noted location to be forward lower port) Location: [#LOC]	$3,841
4415-0161	2.5" Left Panel Discharge Akron Manual Valve w/30 Degree Droop. Location: [#LOC].	$1,159
4415-0162	2.5" Left Panel Discharge Akron Electric Valve w/30 Degree Droop. Location: [#LOC].	$3,066
4415-0163	2.5" Left Panel Dishcarge Akron Electric Valve & Navigator 9305 w/30 Degree Droop Location: [#LOC]	$5,786

4415-0164	2.5" Right Panel Discharge Akron Manual Valve w/30 Degree Droop. Location: [#LOC].	$1,159
4415-0165	3" Right Panel Discharge Akron Manual Valve w/30 Degree Droop. (Waterous pumps noted if location is forward of steamer use lower discharge port.) Location: [#LOC].	$1,771
4415-0166	2.5" Right Panel Discharge Akron Electric Valve w/30 Degree Droop Location: [#LOC]	$3,066
4415-0167	3" Right Panel Discharge Akron Electric Valve w/30 Degree Droop (Waterous pumps noted location to be forward lower port) Location: [#LOC]	$3,742
4415-0168	2.5" Right Panel Discharge Akron Electric Valve & Navigator 9305 w/30 Degree Droop Location: [#LOC]	$5,786
4415-0169	3" Right Panel Discharge Akron Electric Valve & Navigator 9305 w/30 Degree Droop (Waterous pumps noted location to be forward lower port) Location: [#LOC]	$6,456
4415-0172	2.5" Auxillary Waterway Discharge Akron Manual Valve. Plumbed from foam manifold and "Y" into w/way pipe downstream from main w/way discharge valve.	$1,038
4415-0179	2.5" Auxiliary Deck Gun Discharge Akron Valve for use with CAFS System.Plumbed from foam manifold and "Y" into Deck Gun pipe downstream from main Deck Gun discharge valve.	$1,796
4415-0184	3" Deck Gun Discharge Hale Manual Valve	$1,698
4415-0185	3" Left Panel Discharge w/Akron Electric Valve & 9305 Navigator for Top Mount Module (Waterous pumps noted location to be forward lower port) Location: [#LOC]	$6,265
4415-0186	3" Left Panel Discharge w/Akron Electric Valve & 9305 Navigator for Top Mount Module (Waterous pumps noted location to be forward lower port) Location: [#LOC]	$6,554
4415-0187	1.5" Crosslay with Hale Manual Valve Location: [#LOC]	$1,706
4415-0189	2.5" Crosslay with Hale Manual Valve Location: [#LOC]	$2,301
4415-0190	Double 1.5" Speedlay with Hale Manual Valve	$2,139
4415-0191	Triple 1.5" Speedlay with Hale Manual Valve	$3,328
4415-0193	Triple Speedlay (2) 1.5" and (1) 2.5" with Hale Manual Valves	$4,759
4415-0194	2.5" front bumper discharge Akron manual valve.	$1,636
4415-0195	4" Right Pump Panel Discharge with 3" Hale Manual Valve Location: [#LOC]	$2,082
4415-0196	5" Right Pump Panel Discharge with 3" Hale Manual Valve Location: [#LOC]	$2,758
4415-0197	2.5" Left Panel Discharge Hale Manual Valve with Droop. Location: [#LOC]	$1,436
4415-0198	2.5" Right Pump Panel Discharge Hale Manual Valve with droop. Location: [#LOC]	$1,536
4415-0199	3" Right Pump Panel Discharge Hale Manual Valve with Droop Location: [#LOC]	$2,101
4415-0200	1.5" Left Panel Discharge Akron Valve	$922
4415-0201	1.5" Right Panel Discharge Akron Valve.	$922
4415-0204	1.5" Crosslay with Hale Electric Valve Location: [#LOC]	$3,077
4415-0205	2.5" Crosslay with Hale Electric Valve Location: [#LOC]	$3,794
4415-0206	Double 1.5" Speedlay with Hale Electric Valve	$4,879
4415-0207	Triple 1.5" Speedlay with Hale Electric Valve	$7,437
4415-0208	Triple Speedlay (2) 1.5" and (1) 2.5" with Hale Electric Valves	$8,990
4415-0209	3" Deck Gun Discharge Hale Electric Valve	$3,748
4415-0210	2.5" Auxiliary Deck Gun Discharge Hale Valve for use with CAFS System	$3,846
4415-0211	2.5" Front Bumper Discharge Hale Manual Valve	$1,685
4415-0212	1.5" Front Bumper Discharge Hale Electric Valve	$2,889
4415-0213	2.5" Front Bumper Discharge Hale Electric Valve	$3,178
4415-0214	1.5" Left Front Hosebed Discharge Hale Manual Valve	$1,055
4415-0215	3" Left Front Hosebed Discharge Hale Manual Valve	$2,123
4415-0216	1.5" Left Front Hosebed Discharge Hale Electric Valve	$2,424
4415-0217	2.5" Left Front Hosebed Discharge Hale Electric Valve	$3,051
4415-0218	3" Left Front Hosebed Discharge Hale Electricl Valve	$4,172
4415-0219	1.5" Right Front Hosebed Discharge Hale Manual Valve	$1,055
4415-0220	3" Right Front Hosebed Discharge Hale Manual Valve	$2,123
4415-0221	1.5" Right Front Hosebed Discharge Hale Electric Valve	$2,424
4415-0222	2.5" Right Front Hosebed Discharge Hale Electric Valve	$3,051
4415-0223	3" Right Front Hosebed Discharge Hale Electric Valve	$4,172
4415-0224	1.5" Left Panel Discharge Hale Valve	$1,017
4415-0225	3" Left Pump Panel Top mount Discharge Hale Manual Valve Location: [#LOC]	$1,764
4415-0226	3" Left Pump Panel Top mount Discharge with 30 deg Droop Hale Manual Valve Location: [#LOC]	$2,047
4415-0227	2.5" Left Panel Discharge Hale Electric Valve. Location: [#LOC]	$2,692
4415-0228	2.5" Left Panel Discharge Hale Electric Valve with Droop. Location: [#LOC]	$2,927
4415-0229	3" Left Pump Panel Top mount Discharge Hale Electric Valve Location: [#LOC]	$3,815
4415-0230	3" Left Pump Panel Top mount Discharge with 30 deg Droop Hale Electric Valve Location: [#LOC]	$4,097
4415-0231	1.5" Right Panel Discharge Hale Valve	$1,017
4415-0232	2.5" Right Pump Panel Discharge Hale Electric Valve. Location: [#LOC]	$2,795
4415-0233	2.5" Right Pump Panel Discharge Hale Electric Valve with droop. Location: [#LOC]	$3,029
4415-0234	3" Right Pump Panel Discharge Hale Electric Valve Location: [#LOC]	$3,869
4415-0235	3" Right Pump Panel Discharge Hale Electric Valve with Droop Location: [#LOC]	$4,151
4415-0236	4" Right Pump Panel Discharge with 3" Hale Electric Valve Location: [#LOC]	$4,130
4415-0237	5" Right Pump Panel Discharge with 3" Hale Electric Valve Location: [#LOC]	$4,806
4415-0238	1.5" Left Rear Discharge Hale Manual Valve Location: [#LOC]	$1,070
4415-0239	3" Left Rear Discharge Hale Manual Valve Location: [#LOC]	$1,852

4415-0240	1.5" Left Rear Discharge Hale Electric Valve Location: [#LOC]	$2,440
4415-0241	2.5" Left Rear Discharge Hale Electric Valve Location: [#LOC]	$2,795
4415-0242	3" Left Rear Discharge Hale Electric Valve Location: [#LOC]	$3,902
4415-0243	1.5" Right Rear Discharge Hale Manual Valve Location: [#LOC]	$1,070
4415-0244	3" Right Rear Discharge Hale Manual Valve Location: [#LOC]	$1,852
4415-0245	1.5" Right Rear Discharge Hale Electric Valve Location: [#LOC]	$2,440
4415-0246	2.5" Right Rear Discharge Hale Electric Valve Location: [#LOC]	$2,795
4415-0247	3" Right Rear Discharge Hale Electric Valve Location: [#LOC]	$3,902
4415-0248	1.5" Crosslay Elkhart Manual Valve Location: [#LOC].	$936
4415-0249	2.5" Crosslay Elkhart Manual Valve. To be located rearward of 1.5" crosslay(s) if applicable. Location: [#LOC]	$1,203
4415-0250	1.5" Crosslay w/2" Elkhart Electric Valve Location: [#LOC]	$2,071
4415-0251	2.5" Crosslay w/Elkhart Electric Valve. To be located rearward of 1.5" crosslay(s) if applicable. Location: [#LOC]	$2,529
4415-0252	1.5" Double Speedlay with Elkhart Manual Valves	$1,880
4415-0253	SPDLY TRPL 1.5" ELKHART VLV	$2,941
4415-0254	Triple Speedlay (2) 1.5" and (1) 2.5" with Elkhart Manual Valves	$4,437
4415-0255	Double 1.5" Speedlay w/2" Elkhart Electric Valves	$4,146
4415-0256	Triple 1.5" Speedlay w/2" Elkhart Electric Valves	$6,340
4415-0257	Triple (2) 1.5" & (1) 2.5" Speedlay w/(2) 2" & (1) 2.5" Elkhart Electric Valves	$8,028
4415-0265	3" Deck Gun Discharge Elkhart Manual Valve w/RC-10 Controller.	$1,712
4415-0266	3" Deck Gun Discharge Elkhart Electric Valve	$3,014
4415-0267	2.5" Auxiliary Deck Gun Discharge Elkhart Valve for use with CAFS System	$1,934
4415-0268	1.5" Front Bumper Discharge Elkhart Manual Valve	$1,496
4415-0269	2.5" Front Bumper Discharge Elkhart Manual Valve	$1,773
4415-0270	1.5" Front Bumper Discharge Elkhart Electric Valve	$2,629
4415-0271	2.5" Front Bumper Discharge Elkhart Electric Valve	$3,098
4415-0272	1.5" Left Front Hosebed Preconnect Elkhart Manual Valve	$995
4415-0273	2.5" Left Front Hosebed Discharge Elkhart Manual Valve	$1,469
4415-0274	3" Left Front Hosebed Discharge Elkhart Manual Valve	$2,138
4415-0275	1.5" Left Front Hosebed w/2" Elkhart Electric Valve	$2,128
4415-0276	2.5" Left Front Hosebed Elkhart Electric Valve	$2,795
4415-0277	3" Left Front Hosebed Elkhart Electric Valve	$3,439
4415-0278	1.5" Right Front Hosebed Preconnect Elkhart Manual Valve	$995
4415-0279	2.5" Right Front Hosebed Discharge Elkhart Manual Valve	$1,469
4415-0280	3" Right Front Hosebed Discharge Elkhart Manual Valve	$2,138
4415-0281	1.5" Right Front Hosebed w/2" Elkhart Electric Valve	$2,128
4415-0282	2.5" Right Front Hosebed Elkhart Electric Valve	$2,795
4415-0283	3" Right Front Hosebed Elkhart Electric Valve	$3,439
4415-0284	1.5" Left Panel Discharge Elkhart Valve	$995
4415-0285	4" Pump Panel Discharge Elkhart Electric Valve (Waterous pumps noted location to be forward lower port) Location: [#LOC].	$4,420
4415-0286	5" Pump Panel Discharge with 4" Akron Electric Valve Location: [#LOC]	$4,830
4415-0287	5" Pump Panel Discharge with 4" Hale Electric Valve Location: [#LOC]	$5,786
4415-0288	5" Pump Panel Discharge with 4" Elkhart Electric Valve Location: [#LOC]	$5,013
4415-0289	2.5" Left Pump Panel Discharge Elkhart Manual Valve. Location: [#LOC]	$1,059
4415-0290	2.5" Left Panel Discharge Elkhart Manual Valve w/45 Degree Droop. Location: [#LOC].	$1,296
4415-0291	3" Left Pump Panel Top mount Discharge Elkhart Manual Valve Location: [#LOC]	$1,779
4415-0292	2.5" Left Pump Panel Discharge Elkhart Electric Valve. Location: [#LOC]	$2,385
4415-0293	2.5" Left Panel Discharge Elkhart Electric Valve w/45 Degree Droop Location: [#LOC]	$2,622
4415-0294	3" Left Panel Discharge Top Mount Elkhart Electric Valve Location: [#LOC]	$3,081
4415-0295	4" Left Pump Panel Discharge with 3" Akron Manual Valve Top Mount Controlled. (Waterous pumps noted location to be forward lower port.) Location: [#LOC].	$1,744
4415-0296	4" Left Pump Panel Discharge with 3" Hale Manual Valve Top Mount Controlled Location: [#LOC]	$2,081
4415-0297	4" Left Pump Panel Discharge with 3" Elkhart Manual Valve Top Mount Controlled (Waterous pumps noted location to be forward lower port) Location: [#LOC]	$1,943
4415-0298	1.5" Right Panel Discharge Elkhart Valve	$995
4415-0299	2.5" Right Pump Panel Discharge Elkhart Manual Valve. Location: [#LOC].	$1,159
4415-0300	2.5" Right Panel Discharge Elkhart Manual Valve w/45 Degree Droop. Location: [#LOC].	$1,296
4415-0301	3" Right Pump Panel Discharge Elkhart Manual Valve Location: [#LOC]	$1,683
4415-0302	4" Right Pump Panel Discharge with 3" Elkhart Manual Valve w/RC-10 Control w/lights. Location: [#LOC].	$1,943
4415-0303	5" Right Pump Panel Discharge with 3" Elkhart Manual Valve Location: [#LOC]	$2,617
4415-0304	2.5" Right Pump Panel Discharge Elkhart Electric Valve Location: [#LOC]	$2,486
4415-0305	2.5" Right Panel Discharge Elkhart Electric Valve w/45 Degree Droop Location: [#LOC]	$2,622
4415-0306	3" Right Pump Panel Discharge Elkhart Electric Valve Location: [#LOC]	$2,985
4415-0307	4" Right Pump Panel Discharge w/3" Elkhart Electric Valve (Waterous pumps noted location to be forward lower port) Location: [#LOC]	$3,248

4415-0308	5" Right Pump Panel Discharge w/3" Elkhart Electric Valve Location: [#LOC]	$3,920
4415-0309	1.5" Left Rear Discharge Elkhart Manual Valve Location: [#LOC]	$1,045
4415-0310	2.5" Left Rear Discharge Elkhart Manual Valve. Location: [#LOC].	$1,214
4415-0311	3" Left Rear Discharge Elkhart Manual Valve Location: [#LOC]	$1,866
4415-0312	1.5" Left Rear Discharge Elkhart Electric Valve Location: [#LOC]	$2,179
4415-0313	2.5" Left Rear Discharge Elkhart Electric Valve Location: [#LOC]	$2,539
4415-0314	3" Left Rear Discharge Elkhart Electric Valve Location: [#LOC]	$3,169
4415-0315	1.5" Right Rear Discharge Elkhart Manual Valve Location: [#LOC]	$1,045
4415-0316	2.5" Right Rear Discharge Elkhart Manual Valve. Location: [#LOC].	$1,214
4415-0317	3" Right Rear Discharge Elkhart Manual Valve Location: [#LOC]	$1,866
4415-0318	1.5" Right Rear Discharge Elkhart Electric Valve Location: [#LOC]	$2,179
4415-0319	2.5" Right Rear Discharge Elkhart Electric Valve Location: [#LOC]	$2,539
4415-0320	3" Right Rear Dicharge Elkhart Electric Valve Location: [#LOC]	$3,169
4415-0322	Second Left Front Hosebed Discharge 1.5" w/2" Akron Manual Valve	$922
4415-0323	Second left front hose bed discharge 2.5" Akron manual valve.	$1,334
4415-0324	Second Left Front Hosebed Discharge 2.5" Hale Manual Valve	$1,559
4415-0325	Second Left Front Hose Bed Discharge 3" Akron Manual Valve.	$1,937
4415-0326	Second Left Front Hosebed 1.5" w/2" Akron Electric Valve	$2,641
4415-0327	Second Left Front Hosebed 2.5" Akron Electric Valve	$3,239
4415-0328	Second Left Front Hosebed 3" Akron Electric Valve	$3,909
4415-0329	Second Left Front Hosebed 1.5" w/2" Akron Electric Valve & Navigator 9305	$4,893
4415-0330	Second Left Front Hosebed 2.5" Akron Electric Valve & Navigator 9305	$5,959
4415-0331	Second Left Front Hosebed 3" Akron Electric Valve & Navigator 9305	$6,623
4415-0335	Second Left Front Hosebed Discharge 1.5" Hale Manual Valve	$1,055
4415-0336	Second Left Front Hosebed Discharge 3" Hale Manual Valve	$2,123
4415-0337	Second Left Front Hosebed Discharge 1.5" Hale Electric Valve	$2,424
4415-0338	Second Left Front Hosebed Discharge 2.5" Hale Electric Valve	$3,051
4415-0339	Second Left Front Hosebed Discharge 3" Hale Electricl Valve	$4,172
4415-0340	Second Left Front Hosebed Preconnect 1.5" Elkhart Manual Valve	$995
4415-0341	Second Left Front Hosebed Discharge 2.5" Elkhart Manual Valve	$1,469
4415-0342	Second Left Front Hosebed Discharge 3" Elkhart Manual Valve	$2,138
4415-0343	Second Left Front Hosebed 1.5" w/2" Elkhart Electric Valve	$2,128
4415-0344	Second Left Front Hosebed 2.5" Elkhart Electric Valve	$2,795
4415-0345	Second Left Front Hosebed 3" Elkhart Electric Valve	$3,439
4415-0346	Second Right Front Hose Bed Preconnect 1.5" With 2" Akron Manual Valve.	$922
4415-0347	Second Right Front Hosebed Discharge 2.5" Akron Manual Valve	$1,334
4415-0348	Second Right Front Hosebed Discharge 2.5" Hale Manual Valve	$1,559
4415-0349	Second Right Front Hosebed Discharge 3" Akron Manual Valve	$1,937
4415-0350	Second Right Front Hosebed 1.5" w/2" Akron Electric Valve	$2,641
4415-0351	Second Right Front Hosebed 2.5" Akron Electric Valve	$3,239
4415-0352	Second Right Front Hosebed 3" Akron Electric Valve	$3,909
4415-0353	Second Right Front Hosebed 1.5" w/2" Akron Electric Valve & Navigator 9305	$4,893
4415-0354	Second Right Front Hosebed 2.5" Akron Electric Valve & Navigator 9305	$5,959
4415-0355	Second Right Front Hosebed 3" Akron Electric Valve & Navigator 9305	$6,623
4415-0359	Second Right Front Hosebed 1.5" Discharge Hale Manual Valve	$1,055
4415-0360	Second Right Front Hosebed Discharge 3" Hale Manual Valve	$2,123
4415-0361	Second Right Front Hosebed Discharge 1.5" w/2" Hale Electric Valve	$2,424
4415-0362	Second Right Front Hosebed Discharge 2.5" Hale Electric Valve	$3,051
4415-0363	Second Right Front Hosebed Discharge 3" Hale Electric Valve	$4,172
4415-0364	Second Right Front Hosebed Preconnect 1.5" Elkhart Manual Valve	$995
4415-0365	Second Right Front Hosebed Discharge 2.5" Elkhart Manual Valve	$1,469
4415-0366	Second Right Front Hosebed Discharge 3" Elkhart Unibody Manual Valve and shall terminate with a 3"FNPT X 2.5"MNST adapter.	$2,138
4415-0367	Second Right Front Hosebed 1.5" w/2" Elkhart Electric Valve	$2,128
4415-0368	Second Right Front Hosebed 2.5" Elkhart Electric Valve	$2,795
4415-0369	Second Right Front Hosebed 3" Elkhart Electric Valve	$3,439
4415-0370	Second 1.5" Front Bumper Discharge Akron Manual Valve	$1,423
4415-0371	Second 1.5" Front Bumper Discharge Hale Manual Valve	$1,518
4415-0372	Second 1.5" Front Bumper Discharge Akron Electric Valve	$2,937
4415-0373	Second 2.5" Front Bumper Discharge Akron Electric Valve	$3,080
4415-0374	Second 1.5" Front Bumper Discharge Akron Electric Valve & Navigator 9305	$5,394
4415-0376	Second 2.5" Front Bumper Discharge Akron Electric Valve & Navigator 9305	$6,262
4415-0378	Second 2.5" Front Bumper Discharge Akron Manual Valve	$1,636
4415-0379	Second 2.5" Front Bumper Discharge Hale Manual Valve	$1,685
4415-0380	Second 1.5" Front Bumper Discharge Hale Electric Valve	$2,889
4415-0381	Second 2.5" Front Bumper Discharge Hale Electric Valve	$3,178
4415-0382	Second 1.5" Front Bumper Discharge Elkhart Manual Valve	$1,496
4415-0383	Second 2.5" Front Bumper Discharge Elkhart Manual Valve	$1,773

4415-0384	Second 1.5" Front Bumper Discharge Elkhart Electric Valve	$2,629
4415-0385	Second 2.5" Front Bumper Discharge Elkhart Electric Valve	$3,098
4415-0386	4" Right Rear Discharge 4" Akron Electric Valve.	$4,712
4415-0387	4" Left Rear Discharge Hale Electric Valve	$5,419
4415-0388	4" Left Rear Discharge Elkhart Electric Valve	$4,669
4415-0389	4" Right Rear Discharge Hale Electric Valve	$5,639
4415-0390	4" Right Rear Discharge Elkhart Electric Valve	$4,892
4415-0391	4" Deck Gun Discharge Akron Electric Valve.	$5,028
4415-0392	4" Deck Gun Discharge Hale Electric Valve	$5,956
4415-0393	4" Deck Gun Discharge Elkhart Electric Valve	$5,207
4415-0397	4" Officer side discharge. Foward of steamer and includes 30 degree droop, 4" Akron full flow valve with 4" driver side hand wheel control.	$3,485
4415-0399	1.5" Crosslay w/2" Akron Valve Handwheel Control Location: [#LOC]	$1,827
4415-0400	1.5" Crosslay w/2" Elkhart Valve Handwheel Control Location: [#LOC]	$1,873
4415-0401	2.5" Crosslay w/Akron Valve Handwheel Control. To be located rearward of 1.5" crosslay(s) if applicable. Location: [#LOC]	$2,008
4415-0402	2.5" Crosslay w/Elkhart Valve Handwheel Control. To be located rearward of 1.5" crosslay(s) if applicable. Location: [#LOC]	$2,053
4415-0403	3" Deck Gun Discharge Akron Valve Handwheel Control.	$2,452
4415-0404	3" Deck Gun Discharge Elkhart Valve Handwheel Control	$2,499
4415-0405	1.5" Front Bumper Discharge Akron Valve Handwheel Control	$2,365
4415-0406	1.5" Front Bumper Discharge Elkhart Valve Handwheel Control	$2,410
4415-0407	2.5" Front Bumper Discharge Akron Valve Handwheel Control	$2,577
4415-0408	2.5" Front Bumper Discharge Elkhart Valve Handwheel Control	$2,623
4415-0409	1.5" Left Front Hosebed Preconnect AkronValve Handwheel Control	$1,863
4415-0410	1.5" Left Front Hosebed Preconnect Elkhart Valve Handwheel Control	$1,909
4415-0411	2.5" Left Front Hosebed Discharge Akron Valve Handwheel Control	$2,274
4415-0412	2.5" Left Front Hosebed Discharge Elkhart Valve Handwheel Control	$2,319
4415-0413	3" Left Front Hosebed Discharge Akron Valve Handwheel Control	$2,878
4415-0414	3" Left Front Hosebed Discharge Elkhart Valve Handwheel Control	$2,923
4415-0415	1.5" Right Front Hosebed Preconnect Akron Valve Handwheel Control	$1,863
4415-0416	1.5" Right Front Hosebed Preconnect Elkhart Valve Handwheel Control	$1,909
4415-0417	2.5" Right Front Hosebed Discharge Akron Valve Handwheel Control	$2,274
4415-0418	2.5" Right Front Hosebed Discharge Elkhart Valve Handwheel Control	$2,319
4415-0419	3" Right Front Hosebed Discharge Akron Valve Handwheel Control	$2,878
4415-0420	3" Right Front Hosebed Discharge Elkhart Valve Handwheel Control	$2,923
4415-0421	4" Pump Panel Discharge Akron Valve Handwheel Control. (Waterous pumps noted location to be forward lower port.) Location: [#LOC].	$3,544
4415-0422	4" Pump Panel Discharge Elkhart Valve Handwheel Control. Location [#LOC]	$3,614
4415-0423	5" Right Pump Panel Discharge with 4" Akron Valve Handwheel Control	$4,139
4415-0424	5" Right Pump Panel Discharge with 4" Elkhart Valve Handwheel Control	$4,207
4415-0425	2.5" Right Pump Panel Discharge Akron Valve Handwheel Control. Location: [#LOC]	$1,966
4415-0426	2.5" Right Pump Panel Discharge Elkhart Valve Handwheel Control. Location: [#LOC]	$2,011
4415-0427	2.5" Right Panel Discharge Akron Valve Handwheel Control w/30 Degree Droop Location: [#LOC]	$2,100
4415-0428	2.5" Right Panel Discharge Elkhart Valve Handwheel Control w/30 Degree Droop Location: [#LOC]	$2,147
4415-0429	3" Right Pump Panel Discharge Akron Valve Handwheel Control (Waterous pumps noted location to be forward lower port). Location: [#LOC].	$2,423
4415-0430	3" Right Pump Panel Discharge Elkhart Valve Handwheel Control Location: [#LOC]	$2,468
4415-0431	3" Right Panel Discharge Akron Valve Handwheel Control w/Droop. Location:(Waterous pumps noted location to be forward lower port) [#LOC].	$2,713
4415-0432	4" Right Panel Discharge w/3" Akron Valve Handwheel Control. Location: [#LOC].	$2,685
4415-0433	4" Right Panel Dischargew/3" Elkhart Valve Handwheel Control Location: [#LOC]	$2,731
4415-0434	5" Right Pump Panel Discharge with 3" Akron Valve Handwheel Control Location: [#LOC]	$3,359
4415-0435	5" Right Pump Panel Discharge with 3" Elkhart Valve Handwheel Control Location: [#LOC]	$3,405
4415-0436	1.5" Left Rear Discharge Akron Valve Handwheel Control Location: [#LOC]	$1,914
4415-0437	1.5" Left Rear Discharge Elkhart Valve Handwheel Control Location: [#LOC]	$1,959
4415-0438	2.5" Left Rear Discharge Akron Valve Handwheel Control Location: [#LOC]	$2,019
4415-0439	2.5" Left Rear Discharge Elkhart Valve Handwheel Control Location: [#LOC]	$2,063
4415-0440	3" Left Rear Discharge Akron Valve Handwheel Control Location: [#LOC]	$2,609
4415-0441	3" Left Rear Discharge Elkhart Valve Handwheel Control Location: [#LOC]	$2,653
4415-0442	4" Left Rear Discharge Akron Valve Handwheel Control	$3,798
4415-0443	1.5" Right Rear Discharge Akron Valve Handwheel Control Location: [#LOC]	$1,914
4415-0444	1.5" Right Rear Discharge Elkhart Valve Handwheel Control Location: [#LOC]	$1,959
4415-0445	2.5" Right Rear Discharge Akron Valve Handwheel Control Location: [#LOC]	$2,019
4415-0446	2.5" Right Rear Discharge Elkhart Valve Handwheel Control Location: [#LOC]	$2,063
4415-0447	3" Right Rear Discharge Akron Valve Handwheel Control Location: [#LOC]	$2,609
4415-0448	3" Right Rear Discharge Elkhart Valve Handwheel Control Location: [#LOC]	$2,653
4415-0449	4" Right Rear Discharge Akron Valve Handwheel Control	$4,019

4415-0455	Second 1.5" Front Bumper Discharge Akron Valve Handwheel Control	$2,365
4415-0456	Second 1.5" Front Bumper Discharge Elkhart Valve Handwheel Control	$2,410
4415-0457	Second 2.5" Front Bumper Discharge Akron Valve Handwheel Control	$2,577
4415-0458	Second 2.5" Front Bumper Discharge Elkhart Valve Handwheel Control	$2,623
4415-0459	Second Left Front Hosebed Discharge 1.5" w/2" Akron Valve Handwheel Control	$1,863
4415-0460	Second Left Front Hosebed Discharge 1.5" w/2" Elkhart Valve Handwheel Control	$1,909
4415-0461	Second Left Front Hosebed Discharge 2.5" Akron Valve Handwheel Control	$2,274
4415-0462	Second Left Front Hosebed Discharge 2.5" Elkhart Valve Handwheel Control	$2,319
4415-0463	Second Left Front Hosebed Discharge 3" Akron Valve Handwheel Control	$2,878
4415-0464	Second Left Front Hosebed Discharge 3" Elkhart Valve Handwheel Control	$2,923
4415-0465	Second Right Front Hosebed Preconnect 1.5" Akron Valve Handwheel Control	$1,863
4415-0466	Second Right Front Hosebed Preconnect 1.5" Elkhart Valve Handwheel Control	$1,909
4415-0467	Second Right Front Hosebed Discharge 2.5" Akron Valve Handwheel Control	$2,274
4415-0468	Second Right Front Hosebed Discharge 2.5" Elkhart Valve Handwheel Control	$2,319
4415-0469	Second Right Front Hosebed Discharge 3" Akron Valve Handwheel Control	$2,878
4415-0470	Second Right Front Hosebed Discharge 3" Elkhart Valve Handwheel Control	$2,923
4415-0471	1.5" Left Discharge Akron Valve in Runningboard Hose Tray, [#LOC].	$922
4415-0472	1.5" Left Discharge Hale Valve in Runningboard Hose Tray, [#LOC].	$1,017
4415-0473	1.5" Left Discharge Elkhart Valve in Runningboard Hose Tray, [#LOC].	$995
4415-0474	1.5" Right Discharge Akron Valve in Runningboard Hose Tray, [#LOC].	$922
4415-0475	1.5" Right Discharge Hale Valve in Runningboard Hose Tray, [#LOC].	$1,017
4415-0476	1.5" Right Discharge Elkhart Valve in Runningboard Hose Tray, [#LOC].	$995
4415-0477	4" Left Rear Discharge Elkhart Valve Handwheel Control	$3,867
4415-0478	4" Right Rear Discharge Elkhart Valve Handwheel Control	$4,090
4415-0484	2.5" Quad Speedlay with Akron Manual Valves.	$4,262
4415-0486	Third Left Front Hosebed Discharge 2.5" Akron Manual Valve.	$1,334
4415-0487	2.5" Discharge Package Montreal. Includes (8) discharges- (4) each side with droop.	$12,799
4415-0488	4" officer rear discharge with 3" valve. Includes 4" FNPT x 4" MNST chrome adaptor with cap (ship loose).	$2,899
4415-0491	2.5" Left Panel Discharge Elkhart Manual UnibodyValve w/30 Degree Droop. Location: [#LOC].	$1,268
4415-0492	2.5" Right Panel Discharge Elkhart Manual UnibodyValve w/30 Degree Droop. Location: [#LOC].	$1,292
4415-0493	1.5" Crosslay w/2" Elkhart Unibody Manual Valve. Location: [#LOC].	$936
4415-0494	1.5" Crosslay w/2" Elkhart Unibody Electric Valve UBEC3 Location: [#LOC]	$4,550
4415-0495	2.5" Right Panel Discharge Elkhart Hand Wheel Control UnibodyValve w/30 Degree Droop Location: [#LOC]	$2,079
4415-0496	3" Deck Gun Discharge Elkhart Unibody Valve Handwheel Control	$2,412
4415-0497	4" Pump Discharge Elkhart Electric UBEC3 Valve Location: [#LOC]	$5,937
4415-0498	1.5" Right Rear Discharge Elkhart Electric UBEC3 Valve Location: [#LOC]	$4,413
4415-0499	2.5" Right Rear Discharge Elkhart Electric UBEC3 Valve Location: [#LOC]	$5,129
4415-0500	1.5" Front Bumper Discharge Elkhart Electric UBEC3 Valve	$4,679
4415-0502	1.5" Front Bumper Discharge Akron Manual Valve without Blowout	$1,423
4415-0504	2.5" Right Panel Discharge Elkhart Manual UnibodyValve Location: [#LOC]	$1,183
4415-0505	2.5" Left Panel Discharge Elkhart Manual UnibodyValve Location: [#LOC]	$1,158
4415-0506	2.5" Right Panel Discharge Elkhart Hand Wheel Control UnibodyValve Location: [#LOC]	$1,971
4415-0507	4" Officer side discharge. Foward of steamer and includes 30 degree droop. Hand Wheel Control on operator panel.	$4,160
4415-0508	1.5" preconnect discharge with Akron Electric Valve. For use on rear mounted pumps only. Locate [#LOC].	$2,937
4415-0510	1.5"/2.5" Double Speedlay with Akron Manual Valves Lower 1.75 speedlay and upper 2.5 speedlay.	$2,119
4415-0511	1.5" Right Panel Discharge Akron Valve Hand Wheel Control	$2,051
4415-0512	2.5" preconnect discharge with Akron Electric Valve. For use on rear mounted pumps only. Locate [#LOC].	$3,919
4415-0514	4" Officer side discharge. Foward of steamer and includes 30 degree droop, 4" Elkhart Elect Control full flow valve.	$4,579
4415-0515	Front jumpline swivel to be recess so WYE valve will clear rise lid and tray.	$149
4415-0516	4" Right Panel Discharge w/ 3" Akron Valve Handwheel Control w/Droop Location: [#LOC]	$2,981
4415-0517	4" Right Pump Panel Discharge with 3" Akron Manual Valve w/Droop. Location: [#LOC].	$2,033
4415-0518	4" Right Panel Discharge w/ 3" Akron Valve Electric w/Droop (Waterous pumps noted location to be forward lower port) Location: [#LOC]	$4,005
4415-0519	4" Right Pump Panel Discharge w/3" Akron Electric Valve & Navigator 9305 with 30 Degree Droop Location: [#LOC]	$6,717
4415-0520	4" Right Pump Panel Discharge with 3" Hale Manual Valve with 30 Degree Droop Location: [#LOC]	$2,371
4415-0521	4" Right Pump Panel Discharge with 3" Hale Electric Valve with 30 Degree Droop Location: [#LOC]	$4,420
4415-0523	5" Right Panel Discharge w/4" Elkhart Electric UBEC3 Valve Location: [#LOC]	$6,198
4415-0524	3" Deck Gun Discharge Elkhart Unibody Manual Valve.	$1,705
4415-0525	1.5" Front Bumper Discharge Elkhart Unibody Manual Valve.	$1,496
4415-0526	Triple Speedlay (2) 1.5" and (1) 2.5" with Elkhart Unibody Manual Valves	$4,437

4415-0527	1.5" Crosslay w/2" Elkhart Electric Unibody UBEC1 Valve Location: [#LOC]	$2,583
4415-0528	2.5" Left Pump Panel Discharge Elkhart Unibody Electric Valve. Location: [#LOC]	$2,828
4415-0529	3" Right Pump Panel Discharge Elkhart Unibody Electric Valve Location: [#LOC]	$3,455
4415-0530	4" Pump Panel Discharge Elkhart UBEC1 Electric Valve (Waterous pumps noted location to be forward lower port). Location: [#LOC].	$4,237
4415-0531	4" Pump Panel Discharge Akron Electric Valve with 30 Degree Droop (Waterous pumps noted location to be forward lower port) Location: [#LOC]	$4,511
4415-0536	5" Right Pump Panel Discharge with 4" Akron Valve Handwheel Control. Location: [#LOC].	$3,560
4415-0537	2.5" Crosslay Elkhart Unibody Manual Valve. To be located rearward of 1.5" crosslay(s) if applicable. Location: [#LOC]	$1,257
4415-0538	1.5" Double Speedlay with Elkhart Unibody Manual Valves	$1,782
4415-0540	Triple Speedlay (2) 1.5" and (1) 2.5" with Elkhart Unibody Manual Valves	$3,985
4415-0541	3" Deck Gun Discharge Elkhart Unibody Manual Valve.	$1,608
4415-0542	Second 1.5" Front Bumper Discharge Elkhart Unibody Manual Valve	$1,496
4415-0543	3" Right Pump Panel Discharge Akron Manual Swing Valve (Waterous pumps noted location to be forward lower port) Location: [#LOC]	$1,705
4415-0544	3" Left Pump Panel Discharge Akron Manual Valve (Waterous pumps noted location to be forward lower port) Location: [#LOC]	$1,547
4415-0545	5" Pump Panel Discharge with 4" Elkhart UBEC1 Electric Valve Location: [#LOC]	$5,013
4415-0547	2.5" Front Bumper Discharge Elkhart Unibody Manual Valve	$1,773
4415-0549	1.5" Front Bumper Discharge Elkhart Electric UBEC1 Valve	$3,023
4415-0550	2.5" Double Speedlay with Akron Manual Valves	$2,132
4415-0551	2.5" Right Front Hosebed Discharge Akron Manual Valve. Locate offset 11.5" from officer side hosebed side.	$1,334
4415-0552	1.5" Front Bumper Crosslay Discharge Akron Manual Valve.	$1,998
4415-0553	2.5" Left Front Hosebed Discharge Akron Manual Valve located outlet shall be located 13.625" from inside hosebed wall.	$1,334
4415-0554	1.5" Triple Speedlay with Akron Valve Hand Wheel Control.	$5,993
4415-0555	3" Deck Gun Discharge Akron Manual Valve with no Plumbing from the valve to deck gun channel Dealer to install Extend-A-Gun and Plumbing from the valve to the channel..	$1,404
4415-0557	2.5" Left Rear Discharge Elkhart Unibody Manual Valve Location: [#LOC].	$1,214
4415-0558	2.5" Right Rear Discharge Elkhart Unibody Manual Valve Location: [#LOC].	$1,214
4415-0559	5" Right Pump Panel Discharge with 4" Elkhart Unibody Valve Handwheel Control Location: [#LOC]	$3,793
4415-0561	2.5" Left Panel Discharge Akron Electric Valve w/30 Degree Droop Location: [#LOC]	$3,066
4415-0562	3" Right Pump Panel Discharge Akron Electric Valve w/30degree Droop (Waterous pumps noted location to be forward lower port) Location: [#LOC]	$3,613
4415-0563	2.5" Right Panel Discharge Akron Electric Valve w/30 Degree Droop Location: [#LOC]	$3,066
4415-0564	3" Right Pump Panel Discharge Elkhart Electric Valve w/30degree Droop Location: [#LOC]	$3,613
4415-0566	1.5" crosslay w/2" Akron electric valve. Location: [#LOC].	$2,583
4415-0567	2.5" Crosslay w/Akron Electric Valve. To be located rearward of 1.5" crosslay(s) if applicable. Location: [#LOC].	$2,969
4415-0568	3" deck gun discharge Akron electric valve.	$3,482
4415-0569	4" deck gun discharge Akron electric valve.	$5,028
4415-0570	1.5" Front Bumper Discharge Akron Electric Valve	$2,937
4415-0571	Second 1.5" Front Bumper Discharge Akron Electric Valve	$2,937
4415-0572	2.5" Front Bumper Discharge Akron Electric Valve	$3,080
4415-0573	Second 2.5" Front Bumper Discharge Akron Electric Valve	$3,080
4415-0574	2.5" Left Pump Panel Discharge Akron Electric Valve. Location: [#LOC].	$2,828
4415-0575	2.5" Left Panel Discharge Akron Electric Valve w/30 Degree Droop. Location: [#LOC].	$2,828
4415-0576	4" Pump Panel Discharge Akron Electric Valve. (Waterous pumps noted location to be forward lower port.) Location: [#LOC].	$4,237
4415-0577	5" Pump Panel Discharge with 4" Akron Electric Valve. Location: [#LOC].	$4,830
4415-0578	1.5" Left Rear Discharge Akron Electric Valve Location: [#LOC]	$2,693
4415-0579	2.5" Left Rear Discharge Akron Electric Valve Location: [#LOC]	$2,985
4415-0580	3" Left Rear Discharge Akron Electric Valve. Location: [#LOC].	$3,638
4415-0581	4" Left Rear Discharge Akron Electric Valve.	$4,489
4415-0582	1.5" Right Rear Discharge Akron Electric Valve Location: [#LOC]	$2,693
4415-0583	2.5" Right Rear Discharge Akron Electric Valve Location: [#LOC]	$2,985
4415-0584	3" Right Rear Dicharge Akron Electric Valve Location: [#LOC]	$3,638
4415-0585	4" Right Rear Discharge Akron Electric Valve.	$4,712
4415-0586	2.5" Right Pump Panel Discharge Akron Electric Valve. Location: [#LOC].	$2,828
4415-0587	3" Right Pump Panel Discharge Akron Electric Valve. Location: [#LOC].	$3,455
4415-0588	4" Right Pump Panel Discharge w/3" Akron Electric Valve (Waterous pumps noted location to be forward lower port) Location: [#LOC]	$3,716
4415-0589	5" Right Pump Panel Discharge w/3" Akron Electric Valve. Location: [#LOC].	$4,389
4415-0590	2.5" Right Panel Discharge Akron Electric Valve w/30 Degree Droop. Location: [#LOC].	$3,066

4415-0591	3" Right Panel Discharge Akron Electric Valve w/30 Degree Droop (Waterous pumps noted location to be forward lower port). Location: [#LOC].	$3,742
4415-0592	4" Right Panel Discharge w/ 3" Akron valve electric w/droop (Waterous pumps noted location to be forward lower port). Location: [#LOC].	$4,005
4415-0593	3" Right Pump Panel Discharge Akron Electric Valve w/30degree Droop (Waterous pumps noted location to be forward lower port) Location: [#LOC]	$3,613
4415-0594	2.5" Right Panel Discharge Akron Electric Valve w/30 Degree Droop Location: [#LOC]	$3,066
4415-0595	1.5" Left Front Hosebed w/2" Akron Electric Valve	$2,641
4415-0596	2.5" Left Front Hosebed Akron Electric Valve	$3,239
4415-0597	3" Left Front Hose Bed Akron Electric Valve.	$3,909
4415-0598	Second Left Front Hosebed 1.5" w/2" Akron Electric Valve	$2,641
4415-0599	Second Left Front Hosebed 2.5" Akron Electric Valve	$3,239
4415-0600	Second Left Front Hosebed 3" Akron Electric Valve	$3,909
4415-0601	1.5" Crosslay w/2" Akron Electric Valve Location: [#LOC]	$2,583
4415-0602	1.5" Right Front Hosebed w/2" Akron Electric Valve	$2,641
4415-0603	2.5" Right Front Hosebed Akron Electric Valve	$3,239
4415-0604	3" Right Front Hose Bed Akron Electric Valve.	$3,909
4415-0605	Second Right Front Hosebed 1.5" w/2" Akron Electric Valve	$2,641
4415-0606	Second Right Front Hosebed 2.5" Akron Electric Valve	$3,239
4415-0607	Second Right Front Hosebed 3" Akron Electric Valve	$3,909
4415-0608	Double 1.5" Speedlay w/2" Akron Electric Valves.	$5,178
4415-0609	Triple 1.5" Speedlay w/2" Akron Electric Valves	$7,883
4415-0610	Triple (2) 1.5" & (1) 2.5" Speedlay w/(2) 2" & (1) 2.5" Akron Electric Valves	$9,501
4415-0611	Triple (2) 1.5" & (1) 2.5" Speedlay w/(2) 2" & (1) 2.5" Akron Electric Valves	$9,501
4415-0612	4" waterway discharge with 3" Akron electric valve.	$3,543
4415-0613	4" waterway discharge with 4" Akron electric valve.	$4,238
4415-0614	3" Left Panel Discharge Top Mount Akron Electric Valve Location: [#LOC]	$3,551
4415-0615	3" Left Panel Discharge Top Mount Akron Electric Valve w/30 Degree Droop (Waterous pumps noted location to be forward lower port) Location: [#LOC]	$3,841
4415-0616	Third Right Front Hosebed Discharge 2.5" Akron Manual Valve.	$1,334
4415-0617	2.5" Left Panel Discharge Akron Manual 3" Valve w/30 Degree Droop Location: [#LOC]	$1,482
4415-0618	2.5" Auxillary Deck Gun Discharge Manual Valve. Plumbed from foam manifold and "Y" into Deck Gun pipe downstream from main Deck Gun discharge valve.	$1,038
4415-0619	4" Right Pump Panel Discharge with 3" Akron Manual Valve. The 4" NST threads shall be a integral part of the valve. (Waterous pumps noted location to be forward lower port.) Location: [#LOC].	$1,744
4415-0620	3" Right Rear Discharge Elkhart Unibody Manual Valve Location: [#LOC]	$1,866
4415-0621	3" Left Front Hosebed Discharge Elkhart Unibody Manual Valve	$2,138
4415-0622	3" Right Front Hosebed Discharge Elkhart Unibody Manual Valve	$2,138
4415-0623	3" Left Rear Discharge Elkhart Unibody Manual Valve Location: [#LOC]	$1,866
4415-0624	4" Rear Discharge w/3" Akron Valve Handwheel Control for Rear Mount. The 4" NST Adapter shall be a integral part of the valve.	$3,186
4415-0625	3" Deck Gun Discharge Akron Valve Handwheel Control for Rear Mount located at rear.	$3,423
4415-0626	Triple Speedlay (forward to rearward or bottom to top) (2) 1.5" and (1) 2.5" with Akron Manual Valve. Speedlays are side by side and located inside transverse compartment.	$1,952
4415-0627	3" Deck Gun Discharge Elkhart Electric Unibody UBEC3Valve	$5,331
4415-0628	5" Pump Panel Discharge Elkhart Electric UBEC3 Valve Location; [#LOC]	$5,586
4415-0629	2.5" Right Rear Discharge Elkhart Unibody Manual Valve Location: [#LOC]	$1,214
4415-0630	4" Left Pump Panel Discharge w/3" Akron Electric Valve (Waterous pumps noted location to be forward lower port) Location: [#LOC]	$3,716
4415-0631	4" Rear Discharge w/4" Akron Valve Handwheel Control for Rear Mount. The 4" NST 30 degree Adapter shall be a integral part of the valve.	$3,744
4415-0632	1.5" Left Front Hose Bed Preconnect Elkhart Unibody Manual Valve.	$995
4415-0633	1.5" Right Front Hosebed Preconnect Elkhart Unibody Manual Valve	$995
4415-0634	Second Left Front Hosebed Discharge 2.5" Elkhart Unibody Manual Valve	$1,469
4415-0635	Second Right Front Hosebed Discharge 2.5" Elkhart Unibody Manual Valve	$1,469
4415-0636	4" Right Pump Panel Discharge with 3" Elkhart Unibody Manual Valve. (Waterous pumps noted location to be forward lower port.) Location: [#LOC].	$1,943
4415-0637	Second Left Front Hosebed Discharge 2.5" w/ 3" Elkhart Unibody Manual Valve and shall terminate with a 3"FNPT X 2.5"MNST adapter.	$2,138
4415-0638	Second Right Front Hosebed Discharge 2.5" w/3" Elkhart Unibody Manual Valve and shall terminate with a 3"FNPT X 2.5"MNST adapter.	$2,138
4415-0639	2.5" Left Rear Rearmount Discharge Akron Manual Valve	$1,390
4415-0642	2.5" rear preconnect with crosslay style swivel. For use with rear mount pump application. Includes Akron manual valve with controller located on pump operator panel. Locate: [#LOC].	$1,858
4415-0645	1.5" rear preconnect with crosslay style swivel. For use with rear mount pump application. Includes Akron manual valve with controller located on pump operator panel. Locate: [#LOC].	$1,658

4415-0646	1.5" speedlay preconnect with swivel. For use with rear mount pump application. Includes Akron manual valve with controller located on pump operator panel. Locate [#LOC]	$1,982
4415-0648	2.5" speedlay preconnect with swivel. For use with rear mount pump application. Includes Akron manual valve with controller located on pump operator panel. Locate [#LOC]	$2,194
4415-0653	1.5" double pre-connect. Includes Akron manual 2" valves with controls located in body compartment on pump operator panel.	$1,754
4415-0654	2.5" Discharge with droop. Located at discharge #1 driver side and includes Akron electric valve with controller located on pump operators panel.	$2,264
4415-0655	2.5" Discharge with droop. Located at discharge #2 driver side and includes Akron electric valve with controller located on pump operators panel.	$2,264
4415-0656	3" Discharge with droop. Located at discharge #1 officer side and includes Akron electric valve with controller located on pump operators panel.	$2,907
4415-0657	3" Deck gun. Includes Akron manual valve with controller located in body compartment on pump operators panel.	$1,925
4415-0658	2.5" Driver rear discharge with cap and NFPA retainer. Includes Akron manual valve with controller located in body compartment on pump operator panel.	$1,528
4415-0659	2.5" Left Pump Panel Discharge Elkhart Unibody Electric Valve with Droop. Location: [#LOC]	$2,944
4415-0660	2.5" Right Panel Discharge Elkhart Unibody Electric Valve w/Droop Location: [#LOC]	$2,943
4415-0661	4" Right Pump Panel Discharge w/3" Elkhart Electric Unibody Valve (Waterous pumps noted location to be forward lower port) Location: [#LOC]	$3,336
4415-0662	3" Deck Gun Discharge Elkhart Electric Unibody Valve	$3,482
4415-0665	1.5" Front Bumper Discharge Akron Electric Valve & Navigator 9315	$5,394
4415-0666	Triple (2) 1.5" & (1) 2.5" Speedlays w/(2) 2" & (1) 2.5" Akron Electric Valves & Navigator 9315	$16,498
4415-0667	2.5" Left Panel Dishcarge Akron Electric Valve & Navigator 9315 w/30 Degree Droop Location: [#LOC]	$5,204
4415-0668	2.5" Right Panel Discharge Akron Electric Valve & Navigator 9315 w/30 Degree Droop Location: [#LOC]	$5,204
4415-0669	2.5" Left Rear Discharge Akron Electric Valve & Navigator 9315 Location: [#LOC]	$5,703
4415-0670	3" Right Panel Discharge Akron Electric Valve & Navigator 9315 w/30 Degree Droop (Waterous pumps noted location to be forward lower port) Location: [#LOC]	$6,063
4415-0671	1.5" double speedlays with Akron manual valves.	$1,736
4415-0672	1.5" Triple Speedlay with Akron Manual Valve	$2,726
4415-0673	Triple Speedlay (2) 1.5" and (1) 2.5" with Akron Manual Valve.	$3,890
4415-0674	1.5" Double Speedlay with Elkhart Manual Valves	$1,880
4415-0675	1.5" Triple Speedlay Elkhart Manual Valves	$2,941
4415-0676	Triple Speedlay (2) 1.5" and (1) 2.5" with Elkhart Manual Valves	$4,437
4415-0677	1.5" Front Bumper Discharge Akron Electric Valve. For use with rear mount pump. Includes air blow-out with control on pump operator panel.	$2,240
4415-0678	1.5" front bumper discharge with Akron manual valve. For use with rear mount pump. Includes air blow-out with control on pump operator panel.	$1,371
4415-0679	1.5" front bumper discharge with Elkhart unibody manual valve. For use with rear mount pump. Includes air blow-out with control on pump operator panel.	$1,308
4415-0680	1.5" front bumper discharge with Elkhart unibody electric valve. For use with rear mount pump. Includes air blow-out with control on pump operator panel.	$2,240
4415-0681	2.5" front bumper discharge with Akron manual valve. For use with rear mount pump. Includes air blow-out with control on pump operator panel.	$1,619
4415-0682	2.5" front bumper discharge with Elkhart unibody manual valve. For use with rear mount pump. Includes air blow-out with control on pump operator panel.	$1,619
4415-0683	2.5" Front Bumper Discharge Akron Electric Valve. For use with rear mount pump. Includes air blow-out with control on pump operator panel.	$2,667
4415-0684	2.5" front bumper discharge with Elkhart unibody electric valve. For use with rear mount pump.	$2,667
4415-0687	2.5" rear panel discharge with Akron manual valve. For use with rear mount pump. Location [#LOC].	$1,135
4415-0688	2.5" rear panel discharge with Elkhart unibody manual valve. For use with rear mount pump. Location [#LOC].	$1,135
4415-0689	3" rear panel discharge with Akron manual valve. For use with rear mount pump. Location [#LOC].	$1,368
4415-0690	3" rear panel discharge with Elkhart unibody manual valve. For use with rear mount pump. Location [#LOC].	$1,368
4415-0691	3" rear panel discharge with Elkhart unibody electric valve. For use with rear mount pump. Location [#LOC].	$2,887
4415-0692	3" rear panel discharge with Akron electric valve. For use with rear mount pump. Location [#LOC].	$2,887
4415-0694	4" rear panel discharge with 3" Akron manual valve. For use with rear mount pump. Location [#LOC].	$1,386
4415-0695	4" rear panel discharge with 3" Elkhart unibody electric valve. For use with rear mount pump. Location [#LOC].	$2,531
4415-0696	4" rear panel discharge with 3" Akron electric valve. For use with rear mount pump. Location [#LOC].	$2,531
4415-0697	4" rear panel discharge with 4" Akron electric valve. For use with rear mount pump. Location [#LOC].	$3,411
4415-0698	4" rear panel discharge with 4" Elkhart unibody electric valve. For use with rear mount pump. Location [#LOC].	$3,411
4415-0699	5" rear panel discharge with 4" Akron electric valve. For use with rear mount pump. Location [#LOC].	$4,830

4415-0700	5" rear panel discharge with 4" Elkhart unibody electric valve. For use with rear mount pump. Location [#LOC].	$4,830
4415-0703	1.5" preconnect discharge with Elkhart unibody manual valve. Includes swivel style connection. Location [#LOC].	$1,048
4415-0704	2.5" preconnect discharge with Elkhart unibody manual valve. Includes swivel style connection. Location [#LOC].	$1,251
4415-0705	2.5" preconnect discharge with Akron electricl valve. Includes swivel style connection. Location [#LOC].	$2,385
4415-0706	2.5" preconnect discharge with Elkhart unibody electricl valve. Includes swivel style connection. Location [#LOC].	$2,385
4415-0707	1.5" preconnect discharge with Akron electric valve. Includes swivel style connection. Location [#LOC].	$2,322
4415-0708	1.5" preconnect discharge with Elkhart unibody electric valve. Includes swivel style connection. Location [#LOC].	$2,818
4415-0709	3" Deck gun discharge with Akron manual valve. For use with rear mount pump and for forward body area. Location [#LOC].	$2,065
4415-0710	3" Deck gun discharge with Akron electric valve. For use with rear mount pump and for forward body area. Location [#LOC].	$3,195
4415-0712	3" Deck gun discharge with Elkhart unibody electricl valve. For use with rear mount pump and for forward body area. Location [#LOC].	$3,195
4415-0713	3" Deck gun discharge with Akron manual valve. For use with rear mount pump and for rearward body/pump module area. Location [#LOC].	$1,235
4415-0714	3" Deck gun discharge with Akron electric valve. For use with rear mount pump and for rearward body/pump module area. Location [#LOC].	$2,636
4415-0718	1.5" Single Speedlay with Akron Manual Valves to hold a 100ft of 1.75.	$940
4415-0719	3" Deck Gun Discharge Akron Electric Valve & Navigator 9315	$6,197
4415-0720	4" Right Pump Panel Discharge w/3" Akron Electric Valve & Navigator 9315 (Waterous pumps noted location to be forward lower port) Location: [#LOC]	$6,428
4415-0721	Quad Speedlay (3) 1.5" / (1) 2.5" with Akron Manual Valves. Located inside transverse compartment.	$2,891
4415-0722	3" Deck Gun Discharge Akron Electric Valve with a 9315 valve controller with pressure reading only. [#LOC]	$3,876
4415-0723	4" Pump Panel Discharge Akron Electric Valve & Navigator 9315 (Waterous pumps noted location to be forward lower port). Location: [#LOC].	$7,481
4415-0724	4" Rear Mount Discharge w/3" Akron 9315 Electric Valve to read Flow and Pressure with 30 degree droop (Waterous pumps noted location to be forward lower port) Location: [#LOC]	$6,428
4415-0725	4" Rear Mount Discharge w/3" Akron 9315 Electric Valve to read Pressure (Waterous pumps noted location to be forward lower port) Location: [#LOC]	$3,667
4415-0726	1.5" Front Bumper Discharge Akron Electric Valve & Navigator 9315 with Pressue Reading only.	$3,290
4415-0727	1.5" Crosslay w/2" Akron Electric Valve & Navigator 9315 to Read Pressure only Location: [#LOC]	$3,062
4415-0728	2.5" Rear Mount Discharge Akron Electric Valve & Navigator 9315 to Read Pressure only. Location: [#LOC]	$3,211
4415-0730	2.5" Left Rear Discharge UBEC3 Electric Valve Location: [#LOC]	$5,129
4415-0731	2.5" Left Pump Panel Discharge UBEC3 Electric Valve with 30 degree droop Location: [#LOC]	$5,099
4415-0732	2.5" Right Pump Panel Discharge UBEC3 Electric Valve with 30 degree droop Location: [#LOC]	$5,099
4415-0733	4.5" Right Pump Panel Discharge with 3" Akron Manual Valve w/Droop Location: right side discharge 1 [#LOC]	$2,211
4415-0735	3" Left Hosebed Akron Electric Valve located Driver side rear below hosebed.	$3,909
4415-0736	3" Right Hosebed Akron Electric Valve located Officer side rear below hosebed.	$3,909
4415-0737	2.5" Discharge with droop. Located at discharge #2 officer side and includes Akron electric valve with controller located on pump operators panel.	$2,264
4415-0738	2.5" upper preconnect. Includes Akron manual valve with controller located in body compartment on pump operator panel.	$1,528
4415-0739	3" Right Pump Panel Discharge Elkhart Electric Valve w/30degree Droop to Terminate with 2.5" MNST w/cap Location: [#LOC]	$3,613
4415-0740	2.5" preconnect discharge with Akron manual valve. With swivel style connection. Location: [#LOC].	$1,251
4415-0741	1.5" preconnect discharge with Akron manual valve. With swivel style connection. Location: [#LOC].	$1,048
4415-0742	2.5" rear panel discharge with Akron electric valve. For use with rear mount pump. Location [#LOC].	$2,714
4415-0743	2.5" rear panel discharge with Elkhart unibody electric valve. For use with rear mount pump. Location [#LOC].	$2,714
4415-0744	2.5" Crosslay w/2.5" Akron Electric Valve & Navigator 9315 to Read Pressure only Location: [#LOC]	$3,549
4415-0746	2.5" Right Panel Discharge Akron Electric 9315 Navigator Valve w/30 Degree Droop to Read Pressure only Location: [#LOC]	$3,524
4415-0747	4" Pump Panel Discharge Akron Electric Navigator 9315 Valve (Read Pressure only) Location: [#LOC]	$4,640
4415-0749	4" rear panel discharge with 4" Akron manual valve with handwheel. For use with rear mount pump. Location [#LOC].	$2,902
4415-0751	2.5" Crosslay Elkhart UBEC3 Electric Valve. To be located rearward of 1.5" crosslay(s) if applicable. Location: [#LOC]	$4,983

4415-0753	Second Left Front Hosebed Preconnect 1.5" Elkhart Unibody Manual Valve	$995
4415-0754	Left Front Hose Bed Discharge 2.5" Elkhart Unibody Manual Valve.	$1,469
4415-0755	Right Front Hosebed Discharge 2.5" Elkhart Unibody Manual Valve	$1,469
4415-0756	Second 1.5" Right Front Hosebed Preconnect Elkhart Unibody Manual Valve	$995
4415-0757	1.5" Front Bumper Discharge Elkhart Electric UBEC3 Valve	$4,900
4415-0758	Left Front Hosebed Discharge 2.5" Elkhart Unibody UBEC3 Valve.	$5,063
4415-0759	Right Front Hosebed Discharge 2.5" Elkhart Unibody UBEC3 Valve.	$5,063
4415-0760	2.5" Front Bumper Discharge Akron Manual Valve without Blowout.	$1,636
4415-0761	4" Officer panel discharge w/ 3" Akron electric valve. Location: [#LOC]	$3,334
4415-0762	4" Pump Panel Discharge Akron Electric Valve with 30 Degree Droop. Location: [#LOC].	$4,511
4415-0763	3" Discharge with 4" connection (no droop). Located at discharge #1 officer side and includes Akron electric valve with controller located on pump operators panel.	$3,337
4415-0764	3" Discharge with 4" connection (no droop). Located at discharge #1 driver side and includes Akron electric valve with controller located on pump operators panel.	$3,337
4415-0765	2.5" Discharge with droop. Located at discharge #2 officer side and includes Akron electric valve with controller located on pump operators panel.	$2,264
4415-0766	1.5" double pre-connect. Includes Akron electric 2" valves with controls located in body compartment on pump operator panel.	$4,093
4415-0767	2.5" Right Panel Discharge Akron Manual 3" Valve w/30 Degree Droop Location: [#LOC]	$1,482
4415-0768	2.5" Crosslay w/Akron Electric Valve & Navigator 9315. To be located rearward of 1.5" crosslay(s) if applicable. Location: [#LOC]	$5,616
4415-0769	Double 1.5" Speedlay w/2" Akron Electric Valves & Navigator 9315	$9,599
4415-0770	2.5" Right Front Hosebed Akron Electric Valve & Navigator 9315	$5,959
4415-0771	4" Deck Gun Discharge Akron Electric Valve & Navigator 9315	$6,283
4415-0772	4" Deck Gun Discharge Elkhart Electric Unibody Valve	$5,207
4415-0773	2.5" Right Pump Panel Discharge w/3" Elkhart Electric Unibody Valve and 30degree Droop [#LOC]	$3,613
4415-0774	3" Right Front Hosebed Elkhart Electric Unibody Valve	$3,439
4415-0775	3" Left Front Hosebed Elkhart Electric Unibody Valve	$3,439
4415-0776	2.5" Left Pump Panel Discharge w/3" Elkhart Electric Unibody Valve and 30degree Droop [#LOC]	$3,613
4415-0777	2.5" Left Panel Discharge 3" Akron Electric 9315 Navigator Valve w/30 Degree Droop to Read Pressure and Flow Location: [#LOC]	$5,233
4415-0778	2.5" Crosslay w/Akron 3" Electric Valve & Navigator 9315 include 3" plumbing. To be located rearward of 1.5" crosslay(s) if applicable. Location: [#LOC]	$5,812
4415-0779	2.5" Left Rear Discharge with Akron Navigator 9315 3" Electric Valve and 3" Piping Location: [#LOC]	$6,623
4415-0780	2.5" Right Front Hosebed Include Akron 3" Electric Valve & 9315 NavigatorControler w/3" Plumbing.	$6,623
4415-0781	3" Right Pump Panel Discharge UBEC3 Electric Valve with 30 degree droop Location: [#LOC]	$6,063
4415-0782	2.5" Left Front Hosebed Include Akron 3" Electric Valve & 9315 NavigatorControler w/3" Plumbing. To terminate at the left front of the hosebed.	$6,623
4415-0783	Double 2.5" Speedlay w/Akron Navigator 9315 3" Electric Valve Controller. Include 3" piping and to terminate with a 2.5" brass swivel.	$11,623
4415-0784	1.5" Rear Panel Discharge manual Akron Valve. Locate [#LOC]	$1,423
4415-0805	5" Left Pump Panel Discharge W/4" Akron Electric Navigator 9315 valve and controller. Include valve position display pressure and flow meter. [#LOC]	$7,553
4415-0806	5" Right Pump Panel Discharge W/4" Akron Electric Navigator 9315 valve and controller. Include valve position display pressure and flow meter. [#LOC]	$7,553
4415-0807	Dual Ground Sweep Nozzles 50 GPM. Locate at front (1) left and (1) right sides control at operator panel.	$1,442
4415-0808	2.5" Left Rear Discharge w/3" Akron Manual Valve. Include 3" plumbing to terminate with 2.5" threads.Location: [#LOC]	$1,667
4415-0811	Akron 2.5" foam system discharge with swing handle. For use with Williams Advent or Hot Shot foam systems. Locate to [#LOC].	$1,021
4415-0812	Elkhart 2.5" foam system discharge with swing handle. For use with Williams Advent or Hot Shot foam systems. Locate to [#LOC].	$1,021
4415-0818	2.5" preconnect discharge with Akron manual valve. Location: [#LOC].	$1,251
4415-0820	5" Right Side Discharge 5" Akron Electric Valve. Locate: [#LOC].	$4,871
4415-0830	3" Right Pump Panel Discharge Elkhart Unibody Manual Valve. Location: [#LOC]	$1,567
4415-0831	3" Right Pump Panel Discharge Elkhart Electric Unibody Valve with 30 degre droop elbow. Location: [#LOC]	$3,344
4415-0834	4" Deck Gun Discharge Outlet with 6" Electric Elkhart Valve and plumbing. Require 4" Monitor	$5,530
4415-0835	4" Deck Gun Discharge Outlet with 6" Electric Akron Valve and plumbing. Require 4" Monitor.	$5,530
4415-0842	5" Right Side Discharge 5" Elkhart Electric Valve. Locate: [#LOC]	$4,871
4415-0847	Akron 635 Swivel with turning vane Located on Top of Bumper officer's side of center tray for Front Bumper Discharge	$153
4415-0848	4" Left Pump Panel Discharge with 3" Elkhart Unibody Manual Valve (Waterous pumps noted location to be forward lower port) Location: [#LOC]	$1,943
4415-0849	5" Pump Panel Discharge 4" Akron Electric Valve & Navigator 9315 (Waterous pumps noted location to be forward lower port) Location: [#LOC]	$7,122
4415-0850	1.5" Double Speedlay w/2" Elkhart Unibody Electric Valve UBEC3.	$9,099

4415-0852	6" Right Side Discharge 6" Elkhart Electric Valve with Unibody controller. Locate: [#LOC]	$5,507
4415-0853	6" Left Side Discharge 6" Elkhart Electric Valve with Unibody controller. Locate: [#LOC]	$5,507
4415-0854	3" Left Rear Discharge Elkhart Electric Unibody Valve Location: [#LOC]	$3,134
4415-0855	3" Right Rear Discharge Elkhart Electric Unibody Valve Location: [#LOC]	$3,134
4415-0856	3" Right Side Discharge Elkhart Electric Unibody Valve. Location: [#LOC]	$3,134
4415-0858	Triple speedlay (1) 1.5" and (1) 2.5" at bottom and located side by side (1) 1.5" above the bottom 2.5". All with Akron manual valves.	$3,152
4415-0859	Triple speedlay (1) 1.5" and (1)2.5" at bottom and located side by side (1) 1.5" above the bottom 1.5". All with Elkhart Unibody manual valves.	$3,252
4415-0874	1.75" Front Bumper Crosslay Discharge with 2" Akron Manual Valve. Include 2" plumbing from pump compartment to back of cab. From back of cab to crosslay swivel will be 2" plumbing.	$2,146
4415-0877	2.5" Crosslay Elkhart UBEC1 Electric Valve. To be located rearward of 1.5" crosslay(s) if applicable. Location: [#LOC]	$2,529
4415-0878	2.5" Right Panel Discharge Elkhart Unibody Electric Valve. Location: [#LOC]	$2,844
4415-0880	2.5" Left Panel Discharge Elkhart Unibody Manual 3" Valve w/30 Degree Droop Location: [#LOC]	$1,482
4415-0881	2.5" Right Panel Discharge Elkhart Unibody Manual 3" Valve w/30 Degree Droop Location: [#LOC]	$1,482
4415-0882	2.5" preconnect discharge with Akron 3" manual valve and 3" plumbing reduce to a 2.5" at the swivel. For use on rear mount pump. Includes swivel style connection. Location: driver side under hosebed (outboard).	$1,743
4415-0883	6" Right Side Discharge 6" Akron Electric Valve. Locate: [#LOC].	$5,507
4415-0886	3" Right Pump Panel Discharge Elkhart Manual Unibody Valve with 30 degre droop elbow. Location: [#LOC]	$1,666
4415-0887	Triple speedlay (1) 1.5" and (1) 2.5" at bottom and located side by side (1) 1.5" above the bottom 1.5". All with Akron electric valves.	$8,028
4415-0888	2.5" Left Pump Panel Discharge UBEC3 Electric Valve Location: [#LOC]	$4,633
4415-0889	2.5" Front Bumper Discharge Elkhart Electric UBEC3 Valve.	$5,093
4415-0892	3" Front Bumper Discharge Akron Manual Valve. Location; 3" front bumper discharge piped through the center of the center front bumper tray and to come out thru the front bumper. Piping to have a cover plate in tray.	$3,370
4415-0895	Hose bib discharge 3/4" with valve. Location Officer's side pump panel.	$278
4415-0897	2.5" Right Rear Discharge Elkhart Electric Unibody Valve Location: [#LOC]	$2,538
4415-0898	2.5" Left Rear Discharge Elkhart Unibody Electric Valve Location: [#LOC]	$2,828
4415-0900	5" Right Side Discharge 5" Akron Hydraulic activated Valve. Location: [#LOC]	$4,871
4415-0903	1.5" Front Bumper Crosslay Discharge Akron Manual Valve	$2,093
4415-0904	2" front bumper discharge Elkhart Electric valve. Include Elkhart electric valve, plumbing, and harness from the valve to joystick control located in cab console. Discharge to terminate and capped off just below the center of the bumper for dealer supplied and installed joystick, and bumper turret.	$2,195
4415-0905	Akron 1.5" foam system discharge with swing handle. For use with Williams Advent or Hot Shot foam systems. Locate to [#LOC].	$829
4415-0907	1.5" front bumper discharge plumbing from back of cab to front bumper.	$509
4415-0908	2.5" Rear Mount Discharge Akron Electric Valve & Navigator 9315 to Read Pressure only w/30 Degree Droop. Location: [#LOC]	$3,321
4415-0910	2.5" hose bed discharge Akron manual valve [#LOC].	$1,334
4415-0911	Double 1.5" Speedlay w/2" Akron Electric Valves & Navigator 9315 to read Pressure only.	$6,121
4415-0912	Second Left Front Hosebed 3" Elkhart Unibody manual Valve	$2,137
4415-0915	6" Waterway Discharge with 6" Akron Electric Valve.	$5,514
4415-0916	4" Deck Gun Discharge Akron Valve Handwheel Control.	$4,160
4415-0918	1.5" Front Bumper Crosslay Discharge Elkhart Unibody Manual Valve	$1,998
4415-0919	Deck gun monitor 3" Gemini manual hand wheel model 34700011 and nozzle 2.5" NH Excel model 51471000.	$3,157
4415-0920	Left Front Hosebed Discharge 2.5" Elkhart Unibody UBEC1 Valve.	$2,794
4415-0921	Right Front Hosebed Discharge 2.5" Elkhart Unibody UBEC1 Valve.	$2,794
4415-0923	4" Right Pump Panel Discharge with 3" Akron Manual Valve. Include a 4"FNST swivel x 4"MNST 30 degree droop adapter, and cap. Location: [#LOC].	$2,033
4415-0924	2.5" Single Speedlay with Akron manual valve located at lower storage area offset to rear.	$1,192
4415-0925	All Discharge/Intake caps, and plug to be Kochek brand and Powder coated. Color; White.	$541
4415-0926	1.5"/2.5" Double Speedlay with Akron Manual Valves, upper 1.75" speedlay and lower 2.5" speedlay.	$2,119
4415-0929	2.5" Right Front Hosebed Akron Electric Valve & Pro Navigator 9325 controller with pressue read out.	$3,888
4415-0930	2.5" Left Front Hosebed Akron Electric Valve & Pro Navigator 9325 controller with pressue read out.	$3,888
4415-0931	2.5" Front Bumper Discharge Akron Electric Valve & Navigator Pro Controller 9325 with pressure read out.	$3,734
4415-0932	Double 1.5" Speedlay w/2" Akron Electric Valves & Navigator Pro 9325 with Pressure read out.	$6,509
4415-0933	2.5" Right Panel Discharge Akron Electric Valve & Navigator Pro 9325 controller w/30 Degree Droop to Read Pressure. Location: [#LOC]	$3,720
4415-0934	2.5" Left Panel Discharge Akron Electric Valve & Navigator Pro 9325 controller w/30 Degree Droop to Read Pressure. Location: [#LOC]	$3,486

4415-0935	4" Right Pump Panel Discharge w/3" Akron Electric Valve & Navigator Pro 9325 with Pressure read out. (Waterous pumps noted location to be forward lower port) Location: [#LOC]	$4,635
4415-0936	4" Pump Panel Discharge Akron Electric Valve & Navigator 9325 w/30 degree droop. (Waterous pumps noted location to be forward lower port). Location: [#LOC].	$5,354
4415-0937	3" Deck Gun Discharge Akron Electric Valve & Navigator read flow, and pressure wiht 9325 controller.	$4,775
4415-0938	2.5" Left Pump Panel Discharge Akron Manual Valve. w/Chrome plated valve face. Location: [#LOC].	$1,041
4415-0939	2.5" Right Pump Panel Discharge Akron Manual Valve. w/Chrome plated valve face. Location: [#LOC].	$1,041
4415-0940	3" Right Pump Panel Discharge Akron Manual Valve w/Chrome Plated valve face (Waterous pumps noted location to be forward lower port). Location: [#LOC].	$1,601
4415-0941	4" Right Pump Panel Storz Discharge with 3" Akron Manual Valve. Include 3" FNST X 4" Storz 30 degree elbow adapter with cap. (Waterous pumps noted location to be forward lower port). Location: [#LOC].	$2,222
4415-0942	Left Rear Discharge 2.5" Elkhart Unibody electric valve with UICS-2 CAFS Controller.	$3,962
4415-0943	3" Deck Gun Discharge Akron Electric Valve & Navigator with 9323 controller.	$3,500
4417-0000	Ground Sweep Nozzle	$1,357
4417-0001	Dual Ground Sweep Nozzles 50 GPM	$1,442
4417-0019	Fire Shop Bezel Chrome - Side Discharge/Intake	$86
4417-0020	Deck Gun Remote 18" Extend-A-Gun, electric, 3" plumbing.	$3,644
4417-0021	Deck Gun Remote Ext-a-Gun 4"	$4,157
4417-0026	Automatic drain valve. For: [#LOC].	$72
4417-0030	Monitor Akron 3578 Elec 2000	$9,011
4417-0031	Monitor Akron 3570 Manual 2000	$3,303
4417-0032	Monitor Scorpion wireless RF radio 2000 GPM	$10,113
4417-0034	Deck gun TFT 18" Extend-A-Gun, 3".	$1,818
4417-0038	Elkhart Model 8294-06 Monitor with SM-200E Nozzle. Wireless Remote control	$12,854
4417-0039	Akron DeckMaster 3440 electric 1250 GPM monitor w/stow.	$10,498
4417-0040	Akron 5177 Akromatic 2.5" master stream nozzle for an Akron 3440 DeckMaster monitor.	$1,603
4417-0041	Akron 1577 SaberMaster 2.5" Nozzle for an Akron 3440 DeckMaster monitor.	$3,064
4417-0042	An Akron tether remote control kit with a 30` cable shall be provided for an Akron 3440 monitor. Plug for the remote control to be located: [#LOC].	$1,017
4417-0043	Task Force Hurricane RC electric 1250 GPM monitor.	$11,820
4417-0044	Task Force M-ERP-NJ 2.5" master stream electric nozzle for a Hurricane RC monitor.	$1,773
4417-0045	Elkhart Stinger 8297-25 Manual 800gpm Monitor w/portable base and adapter to mount to deck gun discharge or extend-a-gun	$2,930
4417-0046	Elkhart 8500 Vulcan RF monitor with panel mounted and hand-held remote controls w/adapter to mount to deck gun discharge or extender.	$5,842
4417-0047	Elkhart SM-1250E Select-O-Matic 2.5" electric nozzle.	$2,217
4417-0048	Elkhart 8598 Electrically Actuated Extender.	$2,653
4417-0051	Thread Type: All 1.5" discharges to be NPSH threads. All 2.5" inlets and discharges to be CSA (Ontario) threads as an integral part of the valve.	$580
4417-0052	Extend Specified Hosebed Preconnect up to top of hosebed. Top of preconnect to be below top of hosebed. Location: [#LOC]	$369
4417-0054	Preconnect extension (Each). The front hosebed preconnect to be extended to the rear of the hosebed area. Includes smooth plate cover. Location: [#LOC]	$368
4417-0055	Superior style cable controls for top mount.	$181
4417-0057	Ferrell Compression Fittings for all Discharge and Intake Bleeder Lines	$559
4417-0059	Extend Specified Hosebed Preconnect up to mid-point of hosebed. Center of preconnect to be approximately center of hosebed height. Location: [#LOC]	$278
4417-0062	Class 1 Style Cable Controls for Top Mount Discharges and Intakes.	$119
4417-0063	Class 1 air operated drains (upgrade) for all discharges and intakes. Includes switch on pump panel for each valve.	$113
4417-0067	Monitor 4" TFT Monsoon Manual with TFT Master Stream 2000 gpm manual Nozzle.	$5,893
4417-0068	TFT Tether Kit with 30' Cable for an TFT Monitor Location: [#LOC]	$707
4417-0073	Deck Gun 12" Extend-A-Gun 3"	$1,818
4417-0075	Monitor 4" TFT Monsoon Electric with TFT Master Stream 2000 gpm electric Nozzle. Include panel mount and hand held Remote.	$13,309
4417-0079	9304 Akron Navitgator electric valve control. Location: All electric discharge valves IPOS.	$547
4417-0080	All 1.5" Threads to be IPT threads	$63
4417-0081	Vented caps and plugs for all discharges/intakes.	$531
4417-0082	Deck Gun Remote 12" Extend-A-Gun 3" Plumbing.	$3,644
4417-0083	Elkhart 8297F Stinger RF Monitor with Panel Mounted and Hand-Held Remote Controls w/adapter to mount to deck gun discharge or extender	$8,314
4417-0084	Task Force M-ERP-NJ 2.5" Masterstream Electric Nozzle for a Hurricane RC Monitor	$1,773
4417-0086	Task Force Typhoon RC Electric Monitor with 1500gpm nozzle. Include Radio Remote Control	$12,458
4417-0088	Bleeder drain valve plumbed to: [#LOC].	$105
4417-0090	Additional control for deck gun electric valve locate adjacent to the outlet.	$1,578

4417-0092	Task Force Typhoon RC Electric Monitor without nozzle. Include Radio Remote Control (Require Nozzle)	$9,999
4417-0097	Innovative Controls Push/Pull Valve Control Handles IPOS.	$45
4417-0099	Akron Wireless Deck Gun Remote Monitor Controller.	$1,456
4417-0100	Akron 3600 Wireless Remote Control.	$1,562
4417-0102	Akron DeckMaster 3440 Electric 1250gpm Monitor w/Stow. With 30' Tether controller located in pump panel operator compartment.	$11,044
4417-0119	Task Force Hurricane RC Electric Monitor with a Master Stream 1250gpm nozzle. Include wireless Radio Remote Control.	$11,064
4417-0124	Akron 3406 Electric Riser.	$3,189
4417-0125	Deck gun TFT 18" Extend-A-Gun, 3". (MODEL XG18VL-XL) for crossfire monitor.	$1,818
4417-0127	Chrome discharge elbow 3"FNST x 2.5"MNST 30 Deg [#LOC].	$231
4417-0129	Left side 2.5" pump panel discharges on Waterous pump to be side by side. For use with Side Mount Pump Module.	$738
4417-0130	Task Force Hurricane XFI-PLNJ Manaul Monitor with MST-4NJ-2.5"NH Quad Stack Tips and M-R1000-NJ Automatic Nozzle.	$3,350
4417-0135	Addition Automatic drain valve. For: front bumper discharge. Loction under front bumper at lowest point.	$72
4417-0138	Officer side pump panel shall have polished stainless steel split escutcheon plates mounted in place for each discharge/intake. The escutcheon plates will be fastened in place to allow quick disassembly to permit the hinge to operate.	$220
4417-0140	Crosslay 1 valve control to electric 9313 comtroller.	$1,687
4417-0143	Lever controls to be Innovative Controls T-handle controls for top mount.	$37
4420-0012	Dry Chemical System 500 lbs	$10,535
4420-0035	Dry Chemical System. Includes a (1) 500lbs dry chemical vessel, (1) nitrogen bottle with rack (driver side) rear.	$8,321
4420-0044	Specify Dry Chemical outlets, (2) two dry chem reels, and (1) Hydro-chem deck gun.	$2,459
4430-0008	Advent 30 Foam System for a Single Foam Tank	$18,308
4430-0009	Advent 60 Foam System for a Single Foam Tank	$21,035
4430-0010	Advent 120 Foam System A and B Type	$27,916
4430-0011	1600 Rockwood Around The Pump Foam System	$3,845
4430-0013	Williams 1500 Around-The-Pump foam system.	$6,524
4430-0014	Hale 2.1A FoamLogix foam system.	$6,480
4430-0015	Hale 3.3 FoamLogix foam system.	$13,767
4430-0016	5.0 Hale FoamLogix Foam System.	$15,520
4430-0017	400 Rockwood around the pump foam system.	$2,895
4430-0018	1600 Hypro/FoamPro foam system.	$7,516
4430-0019	2001 Hypro/FoamPro foam system.	$12,209
4430-0020	2002 Hypro/FoamPro foam system.	$15,562
4430-0022	Hot Shot II 150 Foam System	$46,919
4430-0023	Hot Shot II 300 Foam System	$49,925
4430-0028	Pneumax 140-P Compressed Air Foam System	$29,602
4430-0029	Pneumax 140-SP Silver Compressed Air Foam System.	$17,596
4430-0031	Eclipse Compressed Air Foam System 1000 GPM Manifold w/2002 FoamPro.	$72,639
4430-0032	CAFSPRO with 2.1 Foam Logix Compressed Air Foam System with 750gpm Manifold	$43,318
4430-0034	Pneumax 80-P PTO Platinum Compressed Air Foam System	$22,338
4430-0035	Pneumax 80-SP PTO Silver Compressed Air Foam System	$15,580
4430-0037	Pneumax 200-P Platinum Compressed Air Foam System	$34,344
4430-0038	Pneumax 200-SP Silver Compressed Air Foam System.	$19,311
4430-0039	Eclipse Compressed Air Foam System 500 GPM Manifold w/2001 FoamPro	$67,735
4430-0041	WATP 500 A/B Foam System Include 1.5" Foam pick up.	$8,922
4430-0042	Advent 12 Foam System for a Single Foam Tank	$18,119
4430-0043	Advent 12 Dual Foam System for Dual Foam Tanks	$19,892
4430-0045	95 GPM Akron Foam Eductor. Location: [#LOC].	$1,989
4430-0046	125 GPM Elkhart Foam Eductor Location: [#LOC]	$2,480
4430-0047	125 GPM Akron foam eductor. Location: [#LOC].	$2,272
4430-0048	95 GPM Elkhart Foam Eductor Location: [#LOC]	$2,263
4430-0051	Advent 30 Dual Foam System for Dual Foam Tanks	$22,514
4430-0052	CAFSPRO with 3.3 Foam Logix Compressed Air Foam System with 750gpm Manifold	$54,669
4430-0053	CAFSPRO with 5.0 Foam Logix Compressed Air Foam System with 750gpm Manifold	$55,598
4430-0056	125 GPM Elkhart Foam Eductor w/air actuated foam valve Location: [#LOC]	$2,994
4430-0057	125 GPM Akron Foam Eductor w/air actuated foam valve. Location: [#LOC].	$2,664
4430-0058	Hot Shift Clutch - Required with CAFS system	$2,712
4430-0059	Eclipse Compressed Air Foam System 500 GPM Manifold w/2002 FoamPro.	$71,088
4430-0060	CAFSPRO 5.0 Foam Logix Compressed Air Foam System with 1000 gpm manifold	$57,106
4430-0061	FoamPro 3012 foam system, hydraulics PTO driven.	$20,706
4430-0062	Advent 120 Foam System single	$25,583
4430-0063	FoamPro 3040D Foam System with elect/hyd drive.	$35,850

4430-0066	Foam Tank To Pump 1" Air/Act for Dealer install foam system.	$758
4430-0070	125 GPM Akron Simple Apparatus Foam System	$1,444
4430-0071	1500V Williams A/B Around The Pump foam system. Include A/B tanks control.	$8,026
4430-0073	1.5 Feecon Around The Pump Foam System	$3,907
4430-0075	2.0 Feecon Around The Pump Foam System	$4,021
4430-0076	Eclipse Waterous Compressed Air Foam System 1000 GPM Manifold.	$57,079
4430-0077	Waterous Advantus 6.0 Foam System	$17,467
4430-0079	The foam system performance shall be tested and certified in compliance with 2009 NFPA 1901.	$260
4430-0080	The balanced pressure foam system performance shall be tested and certified in compliance with 2009 NFPA 1901.	$520
4430-0081	1500 Williams Around The Pump Foam System Up Graded to 2000gpm at 3%	$2,544
4430-0085	Classic 140 Compressed Air Foam System.	$21,534
4430-0087	Advent 60 Foam System for a dual Foam Tank.	$21,905
4430-0089	The main pump manifold to have water loop for dealer installed foam system (Class A Foam System) to noted preconnects/discharges	$673
4430-0090	Hot Shot II 160-348 High Pressure Foam System.	$53,461
4430-0093	Venom 5.0 Hypro/Foam Pro Foam System.	$15,956
4430-0094	Advent 12 Elecrict (230) Dual Foam System for Dual Foam Tanks	$22,629
4430-0107	WATP 500 B Foam System. Includes 1.5" Foam pick-up.	$7,505
4430-0108	FRC MFA200 Class A around the pump foam system.	$2,381
4430-0109	Waterous Advantus 3.0 foam system.	$12,700
4430-0112	125 GPM Arkon Foam Eductor w/akron manual panel mount 1/4 turn foam valves (1) for A tank, and (1) for B tank. Location: [#LOC]	$2,945
4430-0113	The foam system shall be factory tested at, minimum, maximum, and midrange.	$260
4430-0114	Eclipse Compressed Air Foam System 3" Manifold w/Advantus 6.0 Foam system.	$67,139
4430-0115	125 GPM Akron foam eductor system with air actuation for both foam eductor and foam supply valve. Location: [#LOC].	$3,345
4430-0116	FoamPro 3040 Foam System hyd drive. (FoamPro Low Flow 130gpm at 3%)	$35,517
4430-0117	1500V Williams A/B Around The Pump Foam System with Single Tank and Aux Pickup to be use for Class A or Class B foam inlet.	$8,525
4430-0118	FoamPro AccuMax 3040 Foam System hyd drive with Multi-Piont Injection, and low flow option.	$35,517
4430-0119	FoamPro AccuMax 3040 Foam System hyd drive with Multi-Piont Injection, and low flow option.	$35,869
4432-0001	Akron 5178 Electric 2000 GPM Nozzle	$2,091
4432-0002	Akron 5070 Manual 2000 GPM Nozzle	$1,608
4432-0003	Elkhart SM2000 Electric Nozzle	$2,079
4432-0009	Hot Shot Ratio Controller 2" Discharge. Plumbed to: [#LOC].	$1,916
4432-0010	Hot Shot Ratio Controller 2.5" Discharge. Plumbed to: [#LOC].	$1,971
4432-0011	Hot Shot Ratio Controller 3" Discharge. Plumbed to: [#LOC].	$2,035
4432-0012	Advent Ratio Controller 2" Discharge. Plumbed to: [#LOC]	$1,568
4432-0013	Advent Ratio Controller 2.5" Discharge. Plumbed to: [#LOC]	$1,571
4432-0014	Advent Ratio Controller 3" Discharge. Plumbed to: [#LOC]	$1,594
4432-0015	Advent Ratio Controller 4" Discharge. Plumbed to: [#LOC]	$1,765
4432-0016	Advent Ratio Controller 5" Discharge. Plumbed to: [#LOC]	$3,221
4432-0019	Foam Pro Remote Start Switch	$635
4432-0020	Eclipse 1.5"/3.0" Compressed Air Foam System Discharge Kit. Location: [#LOC].	$20
4432-0022	1.5" Compressed Air Foam System Discharge Kit Location: [#LOC]	$305
4432-0023	2.0" Compressed Air Foam System Discharge Kit. Location: [#LOC].	$307
4432-0024	2.5" Compressed Air Foam System Discharge Kit. Location: [#LOC].	$310
4432-0025	3.0" Compressed Air Foam System Discharge Kit Location: [#LOC]	$347
4432-0026	3" Deck Gun Discharge Eclipse Compressed Air Foam System	$3,403
4432-0027	3" Deck Gun Compressed Air Foam System	$3,696
4432-0028	Pump, foam transfer, 15 GPM, 12 volt, mounted in vehicle body. Activation switch operated from driver's side pump panel ARFF.	$1,953
4432-0036	A/B Hypro/FoamPro manual foam selector.	$2,053
4432-0037	A/B Class 1 manual foam selector.	$2,964
4432-0045	Hot Shift Clutch	$2,792
4432-0052	Remote foam tank fill, FoamPro's "Power Fill".	$536
4432-0054	Akron Quick Disconnect Foam Pickup Tube on Driver's Side Pump Panel for Eductor. Located on: [#LOC].	$431
4432-0055	Elkhart Quick Disconnect Foam Pickup Tube on Driver's Side Pump Panel for Eductor Located on: [#LOC]	$612
4432-0056	Hale EZ-Fill foam system for a single foam tank. Includes clear hose wand (shipped loose). Controller and connection port located [#LOC].	$2,522
4432-0057	Hale EZ-Fill foam system for dual foam tank. Includes clear hose wand (ship loose). Controller and connection port located [#LOC].	$2,845
4432-0058	Akron quick-disconnect foam pickup tube on officer's side pump panel for eductor. Located on: [#LOC].	$431

4432-0059	Elkhart Quick Disconnect Foam Pickup Tube on Officer's Side Pump Panel for Eductor Located on: [#LOC]	$612
4432-0060	Label for ATP foam systems.	$30
4432-0061	FoamPro foam system refill. Includes clear hose wand (ship loose). Controller and connection port located [#LOC].	$2,850
4432-0063	Hale Foam Logix Air Actuated A/B Selector	$3,353
4432-0064	Hypro Foampro Electric Acutated A/B Selector	$3,147
4432-0065	3" Deck Gun CAFSPRO Compressed Air Foam System	$5,895
4432-0066	Additional 3/4" Foam Tank Valve for 95 Eductor and Dual Foam Cells	$414
4432-0068	Ranger 2.0 Hydro Chem Electric Nozzle	$3,293
4432-0070	Hot Shot Ratio Controller 4" Discharge. Plumbed to: [#LOC]	$2,715
4432-0071	Foam Pickup 2" on Driver's Side Pump Panel for 3040D Foam System with Pickup Tube.(Montreal only)	$997
4432-0072	Foam Tank Fill 1.5" Air Act for a 3040D Foam System.(Montreal only)	$574
4432-0074	.375 Foam Maniflod Drain	$119
4432-0075	FoamPro Advanced Digital Controller	$122
4432-0076	Foam Pickup 2" on Officer's Side Pump Panel for 3040D Foam System with Pickup Tube.(Montreal only)	$997
4432-0077	Foam Pickup 10 feet with 1.0 PVC Clear Spiraflex Hose IPOS	$216
4432-0078	Foam tank drain plumbed to side panel with valve and 3/4" male garden hose connection. To allow filling of remote foam unit and pails from tank.	$778
4432-0079	A/B Class 1 Manual Foam Selector	$2,964
4432-0080	Special CAFS/FOAM Manifold for (4) preconnects, Deck Gun, and 3" Right Rear discharge.	$5,450
4432-0082	Foam Pickup 2" on Side Pump Panel. With Manual valve and Pickup Tube.	$725
4432-0083	Deck Gun Foam Tank To Pump Connection Provide a Manual 1.5" Valve Locate Next to Deck gun outlet.	$727
4432-0089	CAFS Manual Air Valve to be .3/4" Valve in place of standard.	$124
4432-0090	CAFS/Foam System Operation Label "Operate only (2) 1 3/4" Discharges or (1) 2 1/2" at a time"	$165
4432-0091	Special design 5" foam/water manifold with check valves.	$3,469
4432-0092	FoamPro Remote Start/Stop in cab.MultiFlo Interface, and Dual Injection control located on operator panel.	$6,406
4432-0093	Hot Shot Ratio Controller 5" . Plumbed to: [#LOC]	$2,767
4432-0094	Waterous Electric Actuated A/B Selector.	$3,011
4432-0096	Hale Foam Logix Remote Start Switch	$669
4432-0097	.75" Foam Maniflod Drain with 1/4 turn valve.	$414
4432-0098	Eclipse Waterous TC20 T-Case W/Compressed Air Foam System. For a S1OOD Waterous pump.	$48,097
4432-0099	Foam System Plumbed to [#LOC].	$272
4432-0100	2.0" Compressed Air Foam System Discharge Kit with Electric actuated 1/2" valve. Location: [#LOC].	$337
4432-0101	2.5" Compressed Air Foam System Discharge Kit with Electric actuated 3/4" valve. Location: [#LOC].	$341
4432-0104	Hale Manual Single Foam Flush System.	$1,049
4432-0105	A/B Foam Selector locate Driver side walk way recess in box on diamond plate panel at front of module.	$157
4432-0108	Hot Shot Ratio Controller 5" Discharge with adjustable metering valve. Plumbed to: [#LOC]	$2,767
4432-0109	Hot Shot Ratio Controller 3" Discharge with adjustable metering valve. Plumbed to: [#LOC]	$2,035
4432-0110	Hot Shot Ratio Controller 2" Discharge with adjustable metering valve. Plumbed to: [#LOC]	$1,916
4432-0111	Install Foam Percentage Rivets in metering valves Precentage Plate.	$787
4432-0113	Foam Intake Test Port Locate on the intake side of pump between the strainer and the pump, bulkhead fitting is to be on operator pump panel.	$86
4432-0114	Foam testing. The foam system shall be calibrated for 1 X 3 Thunderstrom foam AR-AFFF concentrate. The foam propotioning system shall provide .25%, .5%, 1%, and 3% foam solutions within the allowable concentration ranges required in NFPA #1901. Each percentage shall be tested at a high and low flow and a revit shall be install at mid point..	$1,869
4432-0115	Foam ready Manifold for a Hale Foam Logix or a Foam Pro system with 3" plumbing feeding the manifold so the dealer can install the Hale or FoamPro manifold.	$791
4432-0117	1.5" FNST Hydro- Foam Aux Foam pickup. The 1.5" FNST foam inlet fitting shall be located on officer side pump panel with a electic over air control valve. And be control at the operator panel.	$1,258
4432-0118	Foam Strainer Pump Panel Mount with 1" connection ports and 2.5" NST cap. (IPOS Strainer for foam system)	$963
4432-0119	Foam Strainer Pump Panel Mount with 1" connection ports and 2.5" NST cap. (For Foam Refill)	$963
4432-0121	Foam Tank Supply/Flush 1" valves will be electric control operated through the V-MUX system. The flush valve to be located as close to foam tank supply valve as possible. A manual flush drain .75" valve will be located under the officer's side running board.	$942
4432-0122	A 1.50" x 10' reinforced concentrate hose and stinger shall be provided with NST threads to connect to the foam inlet as (shipped loose) for auxiliary foam operations.	$255
4432-0123	Eclipse 1.5"/3.0" Compressed Air Foam System Discharge Kit Location: [#LOC]	$487
4432-0125	6" Ratio Controller for Hot Shot II System. Include metering valve. Location: [#LOC].	$3,556
4432-0134	Eclipse 1.5"/3.0" Compressed Air Foam System Discharge Kit. Location: [#LOC].	$272

4432-0135	CAFS Audible w/light Low Air Alarm shall be tied into the CAFS air system. If it drop below 90PSI the alarm aviate.	$323
4432-0137	Hot Shot Ratio Controller 6" Discharge with adjustable metering valve. Plumbed to: [#LOC]	$3,835
4432-0138	Hot Shot Ratio Controller 2.5" Discharge with adjustable metering valve. Plumbed to: [#LOC]	$2,759
4432-0146	Monitor/Noz 1x4 Hydro Foam 1-3%. Paint Monitor: [#COL]	$67,357
4432-0151	FoamPro aux foam fill kit. Include check valve, level sensor, placard and camlok connection.	$665
4432-0152	1.5" Foam Tank to pump Electric/Air Actuated. With a guard switch cover adjacent to the foam control display.	$925
4432-0153	CAFS system water drain shall be extended out to pump panel.	$210
4432-0159	CAFs system drains shall be extended to the officer's side pump panel area.	$317
4432-0160	3" Compressed Air Foam System Discharge Kit with Electric actuated 3/4" valve. Location: [#LOC]	$394
4432-0161	1.5" Compressed Air Foam System Discharge Kit with Electric actuated 1/2" valve. Location: [#LOC]	$337
4432-0162	6" High Flow Ratio Controller for Hot Shot II System. Include metering valve. Location: [#LOC].	$3,555
4432-0163	1.5" Foam Tank to pump Air Actuated. With a guard switch cover adjacent to the foam control display.	$924
4432-0164	Waterous Electric Acutated A/B Selector. A to be plumb to the foam tank, and B to be plumb to the left pump panel for a Aux foam pick up.	$3,011
4432-0165	Special design foam/water manifold to allow dealer supplied foam system to be plumbed to crosslay 1, crosslay 2 and rear discharge so they are foam ready.	$3,469
4432-0166	Special design 4" foam manifold with check valve to prevent foam from back flowing into the water pump. Include 4" Check valve with 4" plumbing, and drain.	$1,520
4432-0167	FoamPro 1/2" Line Controller plumbed to [#LOC].	$6,501
4435-0001	Class 1 Intelli-Tank water tank level gauge.	$442
4435-0002	Class 1 Intelli-Tank foam tank level gauge.	$458
4435-0003	Class 1 Intelli-Tank/Whelen 500 LED water tank level gauge package. Location of Whelen 500 tank level lights: [#LOC].	$3,587
4435-0004	Sight Tube Water Tank Level Gauge. Located driver's side front of body.	$456
4435-0005	Innovative Controls 5 Water Tank Level Gauge	$415
4435-0006	Innovated Contols 5 Foam Tank Level Gauge	$650
4435-0007	Class 1 Water Bar graph style Tank Level Gauge.	$697
4435-0008	Class 1 foam Bar graph style Tank Level Gauge.	$922
4435-0009	Fire Research TankVision model WL2600 Class A foam tank level gauge.	$856
4435-0010	Fire Research TankVision model WL2000 water tank level gauge.	$745
4435-0011	Fire Research TankVision model WL2700 B foam tank level gauge.	$855
4435-0012	Pump overheat indicator.	$329
4435-0013	4.5" Class 1 compound pressure gauge (30-0-600 PSI).	$175
4435-0014	Dual Read 4.5" Pressure Gauge (30-0-600 psi/100-0-4140 KPA).	$261
4435-0015	2.5" Class 1 compound pressure gauge (30-0-600). Discharge(s): [#LOC].	$125
4435-0016	Dual Read 2.5" Pressure Gauge (30-0-600 psi/100-0-4140 KPA). Discharge: [#LOC].	$177
4435-0018	Dual Read 3.5" Pressure Gauge (30-0-600 psi/100-0-4140 KPA). Discharge: [#LOC]	$240
4435-0019	3.5" Class 1 compound pressure gauge (30-0-600). Discharge: [#LOC].	$149
4435-0020	MC Products gauge heater line controls and strips for 4 gauges.	$674
4435-0021	Gauge heater strips, additional (EA).	$128
4435-0022	6" NoShok pressure gauge (30-0-600).	$612
4435-0023	4" NoShok master pressure gauges (30-0-600).	$185
4435-0024	6" Class 1 compound pressure gauge (30-0-600).	$602
4435-0025	Flowminder Super System. Discharge: [#LOC].	$2,491
4435-0026	Flowminder System with Totalizer. Discharge: [#LOC].	$1,610
4435-0027	Flow Meter Value System. Discharge: [#LOC].	$1,478
4435-0030	Transmission temperature gauge.	$227
4435-0031	Pump hourmeter on pump operator's panel.	$141
4435-0033	Ammeter Gauge on Pump Operator's Panel	$258
4435-0034	Fuel level gauge on pump operator's panel.	$312
4435-0035	Enfo III System on Pump Operator's Panel	$943
4435-0036	Engine gauge package at the pump operator's panel.	$653
4435-0038	Class 1 Engine Status Center on Pump Operator's Panel	$1,549
4435-0040	FRC Tachplus engine monitoring display.	$1,270
4435-0047	Class 1 Tank Level Intel Water Gauge, Additional. Location: [#LOC].	$509
4435-0049	Class 1 tank level water LED graph gauge, additional. Location: [#LOC].	$697
4435-0050	FRC Tank Level Water TankVision Gauge, Additional. Location: [#LOC].	$474
4435-0051	Innovated Controls 5 Light Tank Level Water Gauge Additional Location: [#LOC]	$621
4435-0052	Class 1 Tank Level Water Mini Gauge Additional. Location: [#LOC].	$465
4435-0053	FRC Tank Level Water TankVision model WLA205-A00 Mini Gauge. Location: [#LOC].	$353
4435-0054	Innovative Controls 5 Light Tank Level Water Mini Gauge. Location: [#LOC].	$485
4435-0055	Class 1 Tank Level Intelli Foam Gauge Additional. Location: [#LOC].	$509
4435-0056	Class 1 Tank Level Foam Mini Gauge Additional Location: [#LOC]	$465
4435-0057	FRC Tank Level A Foam Tank Vision model WLA205-A00 Mini Gauge, Additional. Location: [#LOC].	$424
4435-0058	FRC Tank Level B Foam Tank Vision model WLA205-A00 Mini Gauge Location: [#LOC]	$424

4435-0059	Innovated Controls Tank Level Foam Mini Gauge Additional Location: [#LOC]	$485
4435-0063	Duplex Master Gauge for CAFS or Industrial Foam Systems.	$470
4435-0064	FRC Insight Ultimate model FPA400 combination pressure/flow gauge. Location: [#LOC].	$1,877
4435-0065	2.5" NoShok pressure gauge (30-0-600). For: [#LOC].	$135
4435-0066	IC5/Whelen 500 Water Tank Level Gauge Package Location of Whelen 500 Tank Level Lights: [#LOC]	$3,561
4435-0067	Class 1/Whelen PSTank Water Tank Level Gauge Package. Location of Whelen PSTank Strip-Lights: [#LOC].	$1,689
4435-0068	IC5/Whelen PSTank Water Tank Level Gauge Package Location of Whelen PSTank Strip-Lights: [#LOC]	$1,663
4435-0069	Class 1 ENFO IV system on pump operator's panel.	$845
4435-0070	Fire Research TankVision model WL2600 Class A and WL2700 Class B foam tank level gauges.	$1,708
4435-0071	FRC Tank Vision model WLA205-A00 Tank Level A and B Foam Gauges Location: [#LOC]	$845
4435-0072	Fire Research Tank Vision Water Tank Level Gauge with Automatic Tank Filling System model ATA400 Location: [#LOC]	$2,612
4435-0074	FRC Water Tank Level Gauge with Driver for Spartan Chassis only.	$992
4435-0075	Ashcroft 6" dry master intake and discharge gauges.	$523
4435-0076	Ashcroft 3.5" dry discharge gauges. Provide for each discharge.	$1,321
4435-0081	Audible and visual indicators on driver side pump panel. (1) audible/visual indicator for high engine temp and low oil pressure and (1) audible/visual for high trans temp.	$259
4435-0083	Innovative Controls 10 LED SL series water tank level gauge.	$453
4435-0084	Innovative Controls 10 LED series foam tank level gauge.	$650
4435-0085	Innovative Controls 10 LED SL series tank level water gauge, additional. Location: [#LOC].	$621
4435-0086	Innovative Controls 10 LED series Tank Level Water Mini Gauge. Location: [#LOC].	$485
4435-0087	Innovative Controls IC 10 LED SL series Tank Level Foam Mini Gauge Additional. Location: [#LOC].	$485
4435-0088	IC 10 LED SL series/Whelen 500 water tank level gauge package. Location of Whelen 500 tank level lights: [#LOC].	$3,561
4435-0089	IC 10 LED SL series/Whelen PSTank water tank level gauge package. Location of Whelen PSTank Strip Lights: [#LOC].	$1,663
4435-0090	Additional PSTank Level Strip-Light. Located: [#LOC].	$404
4435-0092	2.5" Class 1 compound pressure gauge (30-0-400). Discharge: [#LOC].	$125
4435-0093	3.5" Class 1 pressure gauge (30-0-400). Discharge: [#LOC].	$149
4435-0094	Class 1 4-1/2" compound pressure gauge (30-0-400 PSI).	$175
4435-0095	2.5" Pressure Gauge (30-0-400). Discharge: [#LOC]. Color: [#COL].	$217
4435-0096	3.5" LED compound pressure gauge (30-0-400). Discharge: [#LOC]. Color: [#COL].	$224
4435-0097	4.5" compound pressure gauge (30-0-400). Color: [#COL].	$230
4435-0099	Flow Meter Value System. Discharge: right side discharge 4	$1,478
4435-0100	Flow Meter Value System. Discharge: left side discharge 4	$1,478
4435-0101	2.5" Span Pressure Gauge (30-0-600). Discharge: [#LOC].	$118
4435-0102	3.5" Span Pressure Gauge (30-0-600). Discharge: [#LOC].	$146
4435-0103	4.5" Span Pressure Gauge (30-0-600 PSI).	$169
4435-0104	MC Series 2000 4 Light Water Tank Level Gauge	$587
4435-0105	MC Series 2000 4 Light Series Foam Tank Level Gauge	$736
4435-0106	Dual Scale 3.5" Pressure Gauge 0-400 PSI / 100-2758 KPA. Replaces Standard	$291
4435-0107	Primer motor master disconnect cut-off switch. Locate on pump panel.	$194
4435-0108	Digital Pressure Gauge IPO Duplex Gauge	$749
4435-0109	2.5" Class 1 Pressure Gauge (30-0-600). IPO Duplex	$125
4435-0110	Pump Overheat Gauge Indicator with Audible Alarm	$420
4435-0111	MC Series 500 4 LED Series Water Tank Level Gauge	$696
4435-0112	Class 1 Pressure 4.5" Gauge (30-0-300 PSI)	$175
4435-0113	FRC TankVision/Whelen PSTank water tank level gauge package. Location of Whelen PSTank Strip-Lights: [#LOC].	$2,242
4435-0114	Digital CAFS CFM Flow Meter	$1,904
4435-0115	2.5" NoShok Pressure Gauge (-30-0-600 PSI/100-0-4140KPA). For: [#LOC].	$150
4435-0116	4" NoShock Dual Read Pressure Gauge 30-0-600PSI/100-0-4140KPA	$196
4435-0117	FRC Tank Level Foam Tank Vision Gauge Additional Location: [#LOC]	$538
4435-0118	4" NoShock Dual Read Pressure Gauge 30-0-400PSI/100-0-2750KPA	$196
4435-0119	2.5" NoShok Pressure Gauge (0-400 PSI/-0-2700KPA) For: [#LOC]	$150
4435-0120	Duplex Master Gauge (0-400 PSI) for CAFS or Industrial Foam Systems.	$470
4435-0122	Fire Research Tank Vision model WL2000 Water Tank Level Gauge w/an audible alarm low level buzzer shall be installed. The buzzer shall sound when the tank volume indicator drops to 1/4 tank.	$889
4435-0123	FRC Insight model FPA410 Ultimate Pressure Gauge LPM/KPA Location: [#LOC]	$1,877
4435-0124	6" Class 1 Compound Pressure Gauge (30-0-400 PSI).	$589
4435-0125	Class Digital Pressure Gauge Discharge: [#LOC]	$749
4435-0126	Digital Master Pressure Gauge	$714
4435-0127	3.5" Span Pressure Gauge (0-400). Discharge: [#LOC]	$152
4435-0128	Dual Read 2.5" Span Pressure Gauge (0-300 psi/0-2050KPA). Discharge: [#LOC]	$167
4435-0129	Dual Read 6.0" Span Pressure Gauge (30-0-400 psi/100-0-2750 KPA)	$343

4435-0130	FRC Insight model FPA400 Ultimate Master Flow Gauge	$1,448
4435-0131	2.5" Class 1 Pressure Gauge (0-300). Discharge: [#LOC]	$133
4435-0133	FRC/Whelen 500 Water Tank Level Gauge Package Location of Whelen 500 Tank Level Lights: [#LOC]	$3,528
4435-0134	FRC Foam Tank Level Gauge "Class B Foam" with Driver for Spartan Chassis only.	$1,119
4435-0135	Class 1 Intelli/Whelen PSTank Water Tank Level Gauge Package Location of Whelen PSTank Strip-Lights: [#LOC]	$2,125
4435-0139	Span Pressure 4" Gauge (0-400 PSI)	$175
4435-0140	Span Master Intake/Pressure 4" 50/50 Gauge (30-0-300)	$293
4435-0147	Innovative Controls 14 LED SL series Water Tank Level Gauge	$459
4435-0148	Innovative Controls 14 LED SL series Foam Tank Level Gauge	$505
4435-0149	IC 14 LED SL series/Whelen 500 Water Tank Level Gauge Package Location of Whelen 500 Tank Level Lights: [#LOC]	$3,590
4435-0151	4.5" Class 1 Pressure Gauge (30-0-600) Black Face w/White letters.	$185
4435-0152	2.5" Class 1 Pressure Gauge (30-0-600). Discharge with Black Face and White Letters: [#LOC]	$133
4435-0154	Class 1 Flowminder System with digital totalizer readout. Discharge: [#LOC]	$1,359
4435-0155	Dual Read 4.5" Span Pressure Gauge (30-0-600 psi/100-0-4140 KPA)	$261
4435-0156	Class 1 Intelli-40 Tank Water Tank Level Gauge with Blue LED's.	$662
4435-0157	Class 1 Intelli-40 Tank Foam Tank Level Gauge with Red LED's.	$633
4435-0158	6" Span Pressure Gauge (30-0-600)	$606
4435-0159	Dual Read 2.5" Pressure Gauge (30-0-400 psi/100-0-2750 KPA). Discharge: [#LOC]	$177
4435-0160	Transmission Temperature Gauge with light and a buzzer alarm for audible warning.	$325
4435-0161	Dual Read 4.5" Pressure Gauge (30-0-400 psi/100-0-2758 KPA)	$261
4435-0162	IC10/Whelen M6 LED Water Tank Level Gauge Package Location of Whelen M6 LED Tank Level Lights: [#LOC]	$3,688
4435-0174	Sight Tube Water Tank Level Gauge. Located inside pump compartment on driver's side as high/low as possible.	$456
4435-0175	Duplex Master Gauge (0-600 PSI) for CAFS or Industrial Foam Systems.	$539
4435-0177	Innovated Controls 14 LED SL series Tank Level Water Gauge Additional Location: [#LOC]	$644
4435-0178	Engine gauge package at the pump operator's panel.	$752
4435-0179	Deluxe engine gauge package with fuel, and transmission temp. gauge built into the tach gauge display at the pump operator's panel.	$859
4435-0180	2.5" Pressure Gauge Dual Read (0-400 PSI/-0-2700KPA) . Discharge: [#LOC]. Color: [#COL].	$221
4435-0181	4.5" Pressure Gauge (30-0-400 psi/100-0-2758 KPA). Color: [#COL].	$280
4435-0182	FRC Insight model FPA412 Ultimate Pressure Gauge LPM/KPA with back lighting Location: [#LOC]	$2,024
4435-0183	Sight Tube Water Tank Level Gauge with Indicator. Located inside pump compartment on driver's side as high/low as possible.	$456
4435-0184	2.5" NoShok pressure gauge (0-400). For: [#LOC].	$135
4435-0185	4" NoShok master pressure gauges 30-0-400PSI.	$228
4435-0186	Class 1 Tank Level Intelli 40 Water Gauge Additional Location: [#LOC]	$730
4435-0187	Class 1 Intelli-40 Tank Water Tank Level Gauge with Red LED's.	$679
4435-0190	IC10 Water with (1) Whelen PSTank Water Tank Level Gauge. Location of Whelen PSTank Strip-Lights: Officer side rear of front cab door.	$1,260
4435-0191	Dual Scale 3.5" Pressure Gauge 0-400 PSI / 100-2758 KPA.. Discharge: [#LOC].	$244
4435-0193	2.5" Class 1 compound pressure gauge (0-400). Discharge: [#LOC].	$125
4435-0196	2.5" Waterway Pressure Gauge Dual Read (30-0-600 psi/100-0-4140 KPA). Discharge: [#LOC]. Color: [#COL].	$178
4435-0198	3.5" Class 1 pressure gauge (0-400). Discharge: [#LOC].	$152
4435-0199	Class 1 Intelli-40M Tank Water Tank Level Gauge.	$679
4435-0200	2.5" Class 1 pressure gauge (0-600). Discharge: [#LOC].	$121
4435-0201	Digital Master Pressure Gauge Located in cab.	$714
4435-0202	4.5" Class 1 Discharge pressure gauge (0-600 PSI).	$125
4435-0203	Additional Whelen 500 Tank Level Lights. Located: officer rear.	$807
4435-0205	3.5" LED Class 1 compound pressure gauge (30-0-400). Discharge: [#LOC]. Color: [#COL].	$223
4435-0206	4.5" compound pressure gauge (30-0-400). Color: [#COL].	$224
4435-0209	2.5" LED Class 1 compound pressure gauge (30-0-400). Discharge: [#LOC]. Color: [#COL].	$220
4435-0210	PSTank Level Strip-Light Pair Located: [#LOC] (Chassis only option require sale codes for gauge and driver)	$809
4435-0211	2.5" NoShok pressure gauge (30-0-600). Non-liquid filled. For: [#LOC].	$135
4435-0212	Generator hourmeter on officer side rear compartment.	$141
4435-0213	Class 1 3-1/2" compound pressure gauge (30-0-400 PSI). Master intake and discharge gauges.	$305
4435-0214	IC10 Water with (1) Whelen PSTank Water Tank Level Gauge. Location of IC10 LED tank level gauge is driver side pump panel. Location of Whelen PSTank Strip-Lights: Officer side rear of body facing rearward.	$1,260
4440-0004	2.5" side suction top mount control handle Akron manual valve. Location: [#LOC].	$1,332
4440-0005	2.5" Left Intake Akron Manual Valve.	$1,004
4440-0006	2.5" right intake Akron manual valve.	$1,004
4440-0007	2.5" Left Rear Intake Akron Manual Valve. (With rear discahrge location to be outside or below).	$1,620
4440-0008	2.5" Right Rear Intake Akron Manual Valve	$1,176

4440-0010	3" Left Intake Akron Manual Valve	$1,648
4440-0011	3" Right Intake Akron Manual Valve.	$1,685
4440-0012	3" right rear intake Akron manual valve. (With rear discharge location to be outside or below.)	$1,934
4440-0014	5" front intake without valve.	$3,195
4440-0015	5" Front Intake w/5" Air Actuated Valve and Relief.	$5,040
4440-0016	5" right rear intake, no valve.	$2,438
4440-0017	5" Right Rear Intake w/5" Air Actuated Valve and Relief.	$4,058
4440-0018	2.5" Rear Intake for Rear Mount	$854
4440-0019	4" Rear Intake Akron Electric Valve for Rear Mount	$3,342
4440-0025	5" front intake with no valve plumbed through front bumper.	$3,572
4440-0026	5" Front Intake w/5" Air Actuated Valve and Relief Plumbed Through Front Bumper.	$5,418
4440-0027	2.5" Left Intake Hale Manual Valve	$1,024
4440-0028	2.5" Right Intake Hale Manual Valve	$1,203
4440-0029	3" Right Intake Hale Manual Valve	$2,131
4440-0030	2.5" Side Suction Top Mount Control Handle Hale Manual Valve Location: [#LOC]	$1,527
4440-0031	3" Left Intake Hale Manual Valve	$1,672
4440-0033	2.5" Left Rear Intake Hale Manual Valve. (With rear discahrge location to be outside or below).	$1,760
4440-0034	2.5" Right Rear Intake Hale Manual Valve	$1,315
4440-0035	3" Right Rear Intake Hale Manual Valve	$2,119
4440-0036	2.5" left intake Elkhart manual valve.	$1,141
4440-0037	3" Left Intake Elkhart Manual Valve	$1,847
4440-0038	2.5" Left Rear Intake Elkhart Manual Valve. (With rear discahrge location to be outside or below).	$1,756
4440-0039	2.5" Side Suction Top Mount Control Handle Elkhart Manual Valve. Location: [#LOC].	$1,466
4440-0040	2.5" Right Intake Elkhart Manual Valve	$1,141
4440-0041	3" Right Intake Elkhart Manual Valve	$1,886
4440-0042	2.5" Right Rear Intake Elkhart Manual Valve	$1,309
4440-0043	3" Right Rear Intake Elkhart Manual Valve. (With rear discahrge location to be outside or below).	$2,132
4440-0044	5" Left Rear Intake w/5" Air Actuated Valve and Relief. Requires air actuated tank to pump with side mount pump module configuration.	$4,410
4440-0045	4" Left Rear Intake Akron Electric Valve w/Intake Relief Valve	$4,727
4440-0046	4" Right Rear Intake Akron Electric Valve w/Intake Relief Valve	$4,727
4440-0047	4" Left Rear Intake Elkhart Electric Valve w/Intake Relief Valve	$5,087
4440-0048	4" Right Rear Intake Elkhart Electric Valve w/Intake Relief Valve	$5,087
4440-0049	3" Left Rear Intake Akron Manual Valve. (With rear discahrge location to be outside or below).	$2,255
4440-0050	3" Left Rear Intake Hale Manual Valve. (With rear discahrge location to be outside or below).	$2,434
4440-0051	3" Left Rear Intake Elkhart Manual Valve. (With rear discahrge location to be outside or below).	$2,450
4440-0053	4" Left Rear Intake Hale Electric Valve w/Intake Relief Valve	$5,653
4440-0054	4" Right Rear Intake Hale Electric Valve w/Intake Relief Valve	$5,653
4440-0055	3" Side Suction Top Mount Control Handle Akron Manual Valve. Location: [#LOC].	$1,916
4440-0056	3" Side Suction Top Mount Control Handle Hale Manual Valve Location: [#LOC]	$2,096
4440-0057	3" Side Suction Top Mount Control Handle Elkhart Manual Valve Location: [#LOC]	$2,110
4440-0058	5" Right Rear Intake w/5" Electric Actuated Valve and Relief.	$5,663
4440-0059	5" Left Rear Intake w/5" Electric Actuated Valve and Relief.	$5,663
4440-0061	5" front intake w/5" Akron electric actuated valve and relief.	$6,310
4440-0062	5" Front Intake w/5" Elkhart Electric Actuated Valve and Relief	$6,313
4440-0063	Intake 6" Elkhart Elk-O-Lite 9786 Piston Valve. Ship Loose.	$1,890
4440-0064	2.5" Left Intake w/3" Akron Manual Valve	$1,535
4440-0065	2.5" Left Intake w/3" Hale Manual Valve	$1,715
4440-0066	2.5" Left Intake w/3" Elkhart Manual Valve	$1,729
4440-0067	2.5" Right Intake w/3" Akron Manual Valve	$1,535
4440-0068	2.5" Right Intake w/3" Hale Manual Valve	$1,715
4440-0069	2.5" Right Intake w/3" Elkhart Manual Valve	$1,729
4440-0070	2.5" Side Suction Top Mount Control Handle w/3" Akron Manual Valve Location: [#LOC]	$1,862
4440-0071	2.5" Side Suction Top Mount Control Handle w/3" Hale Manual Valve Location: [#LOC]	$2,043
4440-0072	2.5" Side Suction Top Mount Control Handle w/3" Elkhart Manual Valve Location: [#LOC]	$2,055
4440-0073	The driver and officer side aux. intakes. Includes 3" valve and 2.5" connection on panel.	$2,307
4440-0074	5" Front Intake without Valve Low "S" in Tray	$3,113
4440-0075	5" Front Intake w/5" Air Actuated Valve and Relief Low "S" in Bumper Tray	$4,957
4440-0076	4" Front intake w/4" Akron electric valve and relief.	$5,627
4440-0077	2.5" Side Intake Operator Control Akron Elec Valve Drivers side.	$2,670
4440-0078	2.5" Left Intake Elkhart Unibody TM Control Manual Valve	$1,244
4440-0079	3" Side Suction Top Mount Control Handle Elkhart Manual Unibody Valve Location: [#LOC]	$1,921
4440-0080	Front Intake, Left and Right Pump 6" Inlet and 2.5 Left Direct Tank Fill Shall be "T" together with spring check valves and plumb into the FRC auto tank fill.	$3,080
4440-0081	2.5" side suction air control Akron valve Drivers side.	$1,027
4440-0082	2.5" Left Intake Akron Manual Valve With Integral 30 Degree Droop	$1,069
4440-0083	2.5" Right Intake Akron Manual Valve With Integral 30 Degree Droop	$1,069
4440-0084	5" Front Intake w/5" Manual Gear Actuated Valve and Relief	$5,912

4440-0086	2.5" Side Intake Operator Control Akron Elec Valve Officer side.	$2,670
4440-0087	2.5" Intake with Akron electric valve. Controller to be located at pump operator panel. Locate intake [#LOC].	$2,681
4440-0088	2.5" Intake with Hale electric valve. Controller to be located at pump operator panel. Locate intake [#LOC].	$2,681
4440-0089	5" Front Intake w/5" Electric Actuated Valve and Relief Low "S" in Bumper Tray	$6,228
4440-0090	2.5" Side Suction Air Act Akron Valve Locate Rear of Steamer.	$1,468
4440-0091	2.5" Side Suction Top Mount Control Handle w/3" Elkhart Unibody Manual Valve Location: [#LOC]	$1,950
4440-0092	3" Left Intake Elkhart Unibody Manual Valve	$1,648
4440-0093	3" Right Intake Elkhart Unibody Manual Valve	$1,685
4440-0094	2.5" Left Intake Elkhart Unibody Manual Valve	$1,004
4440-0095	2.5" Right Intake Elkhart Unibody Manual Valve	$1,004
4440-0096	5" Front Intake w/4" Hale Electric Actuated Valve and Relief Low "S" in Bumper Tray	$6,207
4440-0097	2.5" Right Intake Elkhart Unibody Manual Valve	$1,004
4440-0098	5" Front Intake w/5" Akron Electric Actuated Valve and Relief	$6,310
4440-0099	2.5" Intake with Akron electric valve. Controller to be located at pump operator panel. Locate intake [#LOC].	$2,681
4440-0100	5" Right Rear Intake w/5" Electric Actuated Valve and Relief.	$5,663
4440-0101	3.0" Side Intake Operator Control Akron Elec Valve Officer side.	$3,078
4440-0102	3" Left Rear Intake Akron Electric Valve w/Intake Relief Valve	$3,176
4440-0103	5" Front Intake w/5" Elect Actuated Valve and Relief Plumbed Thru Front Bumper	$6,310
4440-0104	3.0" Side Intake Operator Control Akron Elec Valve Driver side.	$3,078
4440-0105	2.5" Intake Akron Manual Valve for Rear Mount Location: [#LOC]	$1,185
4440-0106	2.5" Intake Akron Electric Valve for Rear Mount Location: [#LOC]	$2,867
4440-0107	2.5" Side Suction Top Mount Control Handle Elkhart Manual Unibody Valve Location: [#LOC]	$1,319
4440-0108	5" Front Intake for use with rear mounted pump. Positioned to run under the officer side of the body to the officer side front bumper. Includes a 5" Akron electric valve and relief(s).	$8,030
4440-0109	2.5" Aux suction and located driver side pump module. Includes Akron electric valve with controller located at pump operator panel.	$2,516
4440-0111	Officer side 5" rear intake (No Valve). Intake to run under officer side of tank and then angle into B1. In B1 the intake needs to angle downward to above floor mounted reel. Support brackets will be provided as required and to engineering requirements. To include any additional primer valves as required.	$3,914
4440-0112	2.5" Intake with Elkhart Unibody electric valve. Controller to be located at pump operator panel. Locate intake [#LOC].	$2,681
4440-0113	2.5" Intake Elkhart Unibody Manual Valve for Rear Mount Location: [#LOC]	$1,185
4440-0115	2.5" Aux suction and located officer side pump module. Includes Akron electric valve with controller located at pump operator panel.	$2,516
4440-0116	2.5" Left Intake w/3" Elkhart Unibody Manual Valve	$1,493
4440-0117	2.5" Right Intake w/3" Elkhart Unibody Manual Valve	$1,493
4440-0126	Akron 2.5" foam system intake with swing handle. For use with Williams Advent or Hot Shot 150 foam system. Locate to [#LOC].	$1,004
4440-0127	Elkhart 2.5" foam system intake with swing handle. For use with Williams Advent or Hot Shot foam systems. Locate to [#LOC].	$1,004
4440-0128	Akron 3" foam system intake with swing handle. For use with Hot Shot 300 foam system. Locate to [#LOC].	$1,703
4440-0129	Elkhart 3" foam system intake with swing handle. For use with Hot Shot 300 foam system. Locate to [#LOC].	$1,703
4440-0130	2.5" Right Intake w/3" Akron Manual Valve. Location: (REAR OF STREAM)	$1,535
4440-0131	2.5" Right Side intake Akron manual valve. Locate valve down low and the handle to be horizontally.	$1,156
4440-0133	3" Intake with Akron electric valve. Controller to be located at pump operator panel. Locate intake [#LOC].	$3,078
4440-0134	3" Intake with Elkhart Unibody electric valve. Controller to be located at pump operator panel. Locate intake [#LOC].	$3,078
4440-0137	2.5" side suction top mount control handle Akron manual valve with chrome plated end. Location: [#LOC].	$1,376
4440-0138	2.5" right intake Akron manual valve with chrome plated end.	$1,048
4440-0139	2.5" Intake Akron Manual Valve for Rear Mount Location: officer side rear intake with Integral 30 Degree Droop	$1,238
4440-0140	2.5" right intake Akron manual valve, located rear of steamer IPO standard location.	$1,004
4440-0141	5" Front Intake w/5" Air Actuated Valve and Relief. A three position air control switch will be located adjacent to the front suction on top of gravel shield inboard of front suction swivel.	$5,040
4440-0142	5" Left Rear Intake w/5" Air Actuated Valve and Relief. Does not include cap. Requires air actuated with side mount pump module configuration.	$4,276
4440-0143	2.5" Intake with Akron Electric Valve & Navigator Pro 9323 Controller. Controller locates on pump operator panel. Locate intake [#LOC].	$2,613
4445-0004	Front intake swivel 5" polished chrome.	$1,899
4445-0005	Front intake swivel 6" polished chrome.	$1,974

4445-0006	Intake Adapter 5" FNPT x 4.5" MNST for Front Intake	$385
4445-0007	Intake adapter 5" FNPT x 6" MNST for front intake.	$476
4445-0008	Intake Relief Valve - Elkhart.	$569
4445-0009	Intake relief valve, Akron.	$416
4445-0011	Valve Relief Intake - Ross 2.5"	$1,721
4445-0013	2.5" Check Valve for [#LOC] intake.	$359
4445-0014	3" Check Valve for [#LOC] Intake	$615
4445-0015	6" Check Valve for [#LOC] Steamer	$598
4445-0016	Intake relief valve, Hale 2.5".	$573
4445-0018	Intake relief valve outlet to be extended to the side of the truck under the running board. Includes tag that reads "Intake Pressure Relief Outlet - Do Not Cap".	$258
4445-0019	Intake Adapter 5" FNST x 4.5" MNST for Front Intake	$385
4445-0020	Intake Adapter 5" FNST x 6" MNST for Front Intake	$476
4445-0021	Intake Adapter 5" FNPT x 4.5" MNST for Rear Intake	$385
4445-0022	Intake adapter 5" FNPT x 6" MNST for rear intake.	$476
4445-0023	Recessed front suction intake swivel in bumper, 3" in tray.	$874
4445-0024	Intake adapter 5" FNPT x 5" MNST for front intake.	$353
4445-0025	Intake Adapter 5" FNPT x 5" MNST for Rear Intake.	$353
4445-0026	Front Intake Swivel 4" Polished Chrome	$1,138
4445-0027	Intake Adapter 4" FNPT x 4" MNST for Rear Intake	$340
4445-0028	Intake bleeder/drain valve to be extended to the side of the truck.	$52
4445-0030	Intake Adapter 5" FNST x 4" MNST for Front, Rear, or Side Intake.	$385
4445-0037	Auto Tank Fill Valve Plumbing "T" into Right MIV'S/Rear Intake with check valves.	$594
4445-0038	Waterous Intake Pressure Relief Valve.	$1,314
4445-0039	Intake Adapter 2-1/2"MNST X 3" FNST Swivels with plug.	$218
4445-0041	Front/Rear Intake Drain Valves to be located inside of the heat pan. Valves to be a 3/4" bleeder valve with 1/4 turn control located under officer side running board.	$146
4445-0042	Storz Connector 4"FNPT x 4" Storz 30Deg Elbow with Tethered Cap For rear intake.	$309
4445-0046	Storz Connector 5"FNPT x 6" Storz with Tethered Cap For rear intake.	$330
4445-0048	Intake pressure relief valve, Task Force Tips.	$402
4445-0049	Intake relief valve outlet to be extended to the side of the truck under the front body compartment. Includes tag that reads "Intake Pressure Relief Outlet - Do Not Cap".	$258
4445-0050	Intake adapter 5" FNPT x 6" MNST for rear intake.	$476
4445-0052	Recessed front suction intake swivel in bumper, 3" in tray using aluminum smooth plate with black Scorpion coating (IPOS diamond plate).	$947
4450-0007	1" Tank Fill Akron Manual Valve	$365
4450-0008	1.5" tank fill Akron manual valve.	$830
4450-0009	1.5" Tank Fill Hale Manual Valve	$962
4450-0010	2" tank fill Akron manual valve.	$997
4450-0011	2.5" tank fill Akron manual valve.	$1,068
4450-0012	1.5" tank drain Akron manual valve.	$728
4450-0014	Direct 2.5" water tank fill with Akron valve. Location: [#LOC].	$1,210
4450-0020	2.5" rear direct tank fill. Location: [#LOC].	$1,207
4450-0021	3" Dual Tank to Pump Akron Manual Valves - Side Panel Controlled	$1,421
4450-0022	3" tank to pump Akron manual valve.	$1,051
4450-0023	3" Tank to Pump Akron Air Actuated Valve	$1,471
4450-0025	4" Tank to Pump Akron Electric Valve for Rear Mount	$3,823
4450-0026	5" Rear Jet Dump No Valve. Include 1-1/2" inline valve and high pressure hydraulic hose connected to the 1-1/2" internal tank piping which runs to the rear of the booster tank.	$2,019
4450-0027	5" Rear Jet Dump w/5" Manual Butterfly Valve	$3,141
4450-0028	Newton Dump with Manually Operated Valve.	$1,805
4450-0029	Newton Dump Extension. For use with a manually operated Newton Dump.	$893
4450-0030	Newton Directional Chute. Includes chute support bracket and support bolts mounted each side on trailing edge of body/beavertails.	$1,451
4450-0031	Electric actuated dump valve includes 18" electric telescopic extension and switch.	$4,884
4450-0032	2" Tank Fill Akron Electric Valve	$2,458
4450-0034	2.5" Tank Fill "AutoFill" Automatic Tank Fill Valve. Location: [#LOC].	$7,079
4450-0035	2.5" Direct Tank Fill Location: [#LOC]	$1,109
4450-0037	4" Tank To Pump Akron Air Valve for Rear Mount	$3,298
4450-0038	4" Air Tank to Pump for Cafspro Foam System	$3,980
4450-0054	2.5" Tank Fill Hale Manual Valve	$1,404
4450-0055	Hale 4" Manual Tank-to-pump	$3,003
4450-0056	3" Air Tank to Pump for Cafspro Foam System with4" plumbing.	$2,059
4450-0057	3" Tank to Pump Hale Manual Valve	$1,198
4450-0058	2.0" Tank Fill Hale Manual Valve	$1,142
4450-0059	1.5" Tank Fill Elkhart Manual Valve	$902
4450-0060	2" Tank Fill Elkhart Manual Valve	$1,070
4450-0061	2.5" Tank Fill Elkhart Manual Valve	$1,203

4450-0062	3" Tank to Pump Elkhart Manual Valve	$1,252
4450-0063	Direct 2.5" Water Tank Fill with Hale Valve. Location: [#LOC]	$1,349
4450-0064	Direct 2.5" Water Tank Fill with Elkhart Valve. Location: [#LOC]	$1,344
4450-0065	Direct 3" Water Tank Fill. Location: [#LOC].	$1,417
4450-0066	Tank-to-pump 4" Akron Air Valve.	$3,203
4450-0067	Tank-to-pump 4" Akron electric valve.	$3,275
4450-0068	3" Tank to Pump w/3.5" Waterous Valve	$1,606
4450-0070	2.5" Tank Fill Hale Electric Valve	$2,516
4450-0071	Tank-to-pump 4" Hale Electric Valve	$4,128
4450-0072	2.5" Direct Fill Line into the tank, Akron electric valve. Location: [#LOC].	$2,918
4450-0073	3" Tank to Pump w/3.5" Waterous Electric Valve	$3,104
4450-0074	2" Tank Fill Akron Valve Handwheel Control	$1,938
4450-0075	2" Tank Fill Elkhart Valve Handwheel	$1,984
4450-0076	2.5" Tank Fill Akron Valve Handwheel Control	$2,008
4450-0077	2.5" Tank Fill Elkhart Valve Handwheel Control	$2,053
4450-0078	3" Dual Tank to Pump Akron Air Valves.	$2,340
4450-0080	3" Tank to Pump Akron Manual Valve two (2) independent Top mount controls	$1,421
4450-0082	1.5" Tank Drain Hale Manual Valve	$820
4450-0083	1.5" Tank Drain Elkhart Manual Valve	$799
4450-0084	Auto Tank Fill Valve Plumbing "T" into Left and Right Fill Thieft with check valves.	$1,298
4450-0085	3" Tank to Pump Elkhart Unibody Manual Valve	$1,331
4450-0086	2" Tank Fill Elkhart Unibody Manual Valve	$1,073
4450-0087	2.5" Tank Fill "AutoFill" Automatic Tank Fill Valve. Location: [#LOC].	$7,129
4450-0088	2" Tank Fill Elkhart Unibody Electric Valve	$2,272
4450-0089	Tank-to-pump 3" Elkhart Electric Valve	$2,730
4450-0090	1.5" Direct Tank Fill Elkhart Unibody Manual Valve Left Side Panel	$996
4450-0091	2.5" Direct Tank Fill "AutoFill" Automatic Tank Fill Valve. Location: [#LOC].	$4,005
4450-0092	3" Tank to Pump Akron Valve Hand Wheel Control.	$2,169
4450-0093	Tank-to-pump 3" Akron Electric Valve	$3,057
4450-0094	Driver side lower pump panel mounted 2.5" direct tank fill.	$1,917
4450-0095	2" Tank Fill Hale Electric Valve	$2,458
4450-0096	Electric 3" Akron tank to pump. Controller located on pump control panel.	$2,949
4450-0097	Electric 3" Hale tank to pump. Controller located on pump control panel.	$2,949
4450-0098	2.5" Tank Fill Akron Electric Valve	$2,602
4450-0099	3" Tank to Pump Elkhart Unibody Air Actuated Valve	$1,481
4450-0100	Direct Rear 2.5" Water Tank Fill [#LOC] with 2.5"Check Stainless steel Technocheck Valve.	$992
4450-0101	Newton Dump with electrically actuated valve and manually actuated chute. Electric dump valve control to be located to the driver side rear within reach from the ground.	$4,421
4450-0102	Direct 1.0" Water Tank Fill Plumb to the fill Tower and Terminate with .75 Female Hose Bib. Location: driver side pump panel	$467
4450-0103	Direct Rear 2.5" Water Tank Fill with 2.5"Check Stainless steel Technocheck Valve. Location: [#LOC]	$992
4450-0104	6" Rear Gravity Dump No Valve	$2,331
4450-0105	3" Tank Fill Akron Manual Valve	$1,404
4450-0106	6" Rear Jet Dump w/6" Electric/Air Butterfly Valve with Control Switchs in Cab and Pump operator panel side Rear.	$3,338
4450-0107	Direct 2.5" water tank fill with 3" Elkhart manual valve. Location: [#LOC].	$1,549
4450-0108	2" tank fill Akron electric valve.	$2,458
4450-0109	2.5" Tank Fill Direct Akron Electric Valve Location: [#LOC]	$2,918
4450-0110	Tank-to-pump 4" Akron Electric Valve	$3,275
4450-0111	4" Tank to Pump Akron Electric Valve for Rear Mount	$3,823
4450-0112	Electric 3" Akron tank to pump. Controller located on pump control panel.	$2,949
4450-0113	5" Rear Jet Dump (No valve). For use with a center slam strip rear end.	$1,823
4450-0114	3" Tank to Pump Electric Over Air Actuated Valve. (For Pump&Roll Operation)	$1,559
4450-0115	Newton Dump with Electric Operated Valve.	$3,463
4450-0116	2.5" Tank Fill Elkhart Unibody Manual Valve	$1,203
4450-0117	Tank-to-pump 4" Elkhart Unibody Electric Valve	$3,275
4450-0118	Direct 2.5" Water Tank Fill with Elkhart Unibody Valve. Location: [#LOC]	$1,344
4450-0119	3" tank to pump Akron manual valve w/4" plumbing.	$1,071
4450-0120	2.5" Rear Tank Inlet. Includes Water Level Gauge Located in B1 Compartment	$1,294
4450-0121	3" Tank To Pump Akron Air Actuated Valve w/4" Plumbing.	$1,471
4450-0122	3" Tank To Pump Akron Electric Actuated Valve w/4" Plumbing	$3,022
4450-0123	Direct 3" Tank Fill Akron Electric Valve with control at pump operator panel valve Location: [#LOC]	$2,949
4450-0124	3" Tank To Pump Elkhart Unibody Manual Valve w/4" Plumbing.	$1,123
4450-0125	3" Tank To Pump Elkhart Unibody Air Actuated Valve w/4" Plumbing	$1,556
4450-0126	Newton Dump with Manually Operated Valve. Model 1060 with 6" Extendable Handle.	$1,810
4450-0127	2.5" Tank Fill "AutoFill" Automatic Tank Fill Valve with IntelliTank level gauge located behind officer side pump panel. Location: [#LOC].	$7,079

4450-0129	3" Tank to Pump. Includes Akron manual valve with controller located in body compartment on pump operator panel.	$1,295
4450-0130	2" tank fill. Includes Akron manual valve with controller located in body compartment on pump operator panel.	$894
4450-0131	2.5" Tank Fill Elkhart Unibody Electric Valve	$2,714
4450-0132	3" Tank To Pump Elkhart Unibody Electric Actuated Valve w/4" Plumbing	$3,036
4450-0133	3" Tank To Pump Akron Air Actuated Valve w/4" Plumbing	$1,471
4450-0134	3" Tank To Pump Akron Manual Valve Hand Wheel Control w/4" Plumbing	$2,640
4450-0135	4" tank to pump with Akron air actuated valve. For use with rear mount pump.	$2,539
4450-0136	4" tank to pump with Elkhart air actuated unibody valve. For use with rear mount pump.	$2,539
4450-0137	4" tank to pump with Akron electric valve. For use with rear mount pump.	$2,906
4450-0138	4" tank to pump with Elkhart unibody electric valve. For use with rear mount pump.	$2,906
4450-0139	2" tank fill with Akron manual valve. For use with rear mount pump.	$942
4450-0140	2" tank fill with Akron electric valve. For use with rear mount pump.	$2,269
4450-0141	2" tank fill with Elkhart unibody manual valve. For use with rear mount pump.	$942
4450-0142	2" tank fill with Elkhart unibody electricl valve.	$2,269
4450-0145	Direct 2.5" Tank Fill Elkhart Unibody Electric Valve w/30 degree droop adapter with swivel/plug and control at pump operator panel. Location: driver side rear B1 compartment.	$2,918
4450-0146	Tank-to-pump 3" Elkhart Unibody Electric Valve	$2,730
4450-0148	4" rear direct tank fill. Includes handwheel control, swivel with droop with cap and retainer. Located to [#LOC] of the rear body.	$2,297
4450-0149	2.5" rear direct tank fill. Includes swing handle control, swivel with droop and cap with retainer. Located to [#LOC] of the rear body.	$1,114
4450-0156	3.0" Tank Drain Akron Air Actuated Valve.	$1,471
4450-0158	Rear tank dump. Includes stainless finish steel assembly with electrically actuated valve. For use with slip on extension and chute. Includes Slip-on stainless steel dump extension and chute with beavertail mounted removable support arm bracket and tailboard mounted storage tray (officer side) with retaining straps.	$4,884
4450-0160	Bush Pack 1" Fill with 1" Cam-Lock fitting located on pump operator pump panel. Include a 3' length of 1" clear hose.	$369
4450-0161	Direct .75" Water Tank Fill Plumbing to Terminate with .75 Female Hose Bib.Location: [#LOC]	$467
4450-0162	Direct 2.5" water tank fill with Akron valve. Location: Driver side rear of steamer Top Mount Control.	$1,338
4450-0163	Direct 3" water tank fill. Location: Driver side pump panel.	$1,417
4450-0164	Direct 2.5" Tank Fill Akron Electric Valve with Dual Control (1) control at the valve and (1) at the pump operator panel. Valve location officer side rear.	$3,517
4450-0166	Additional 3" Tank To Pump Akron Manual Valve w/4" plumbing. Shall include internal plumbing to the rear of the tank into the rear sump on officer side.	$1,935
4450-0169	4" rear direct tank fill. Includes handwheel control, with 5" Swivel Storz elbow and cap. Located to [#LOC] off rear of body	$2,709
4450-0170	Rear tank dump. Includes stainless finish steel assembly with electrically actuated valve. For use with slip on extension and chute. Includes beavertail mounted removable support arm bracket. Slip-on stainless steel dump extension with tailboard mounted storage tray (officer side) with retaining straps and chute mounted in B1 compartment above the dump.	$4,884
4450-0171	2.5" rear direct tank fill. The 2.5" direct water tank fill connection shall include an inlet strainer, a 2.5" FNST chrome inlet swivel, w/double male nst adapter and a chrome cap with cable. [#LOC] of the rear body.	$1,114
4450-0172	4" Direct Tank Inlet/Outlet w/4" Elect Valve. Include 4" plumbing, strainer and terminate with 4"FNST X 5" storz adapter w/cap. Location at left side pump panel.	$3,823
4450-0174	2.5" Direct Tank Fill Akron Electric Valve with Dual Control (1) control at the valve and (1) at the pump operator panel. Valve location officer side rear.	$3,733
4450-0175	4" rear direct tank fill. Includes electric dual control (1)operator panel (1) at valve, with 4" Swivel Storz elbow and cap. Located to (1) left and (1) right side off the rear body	$3,471
4450-0176	3" Tank to Pump Electric Over Air Actuated Valve w/4" Plumbing.. Include (1) control in cab, and (1) control pump operator panel).	$1,559
4450-0181	Hose bib female direct tank inlet 3/4" with valve. Location Officer side pump panel.	$277
4450-0182	Rear tank dump. Includes stainless finish steel assembly with air actuated valve on top of dump assembly. Includes integral swivel chute with manual extension.	$5,489
4450-0183	4" rear direct tank fill. Includes handwheel control, with cap and retainer. Valve to be Located on rear tailboard officer side. Include stainless steel plumbing from the top of the tank to tailboard. A 2.5" Direct inlet shall be"T" into the 4" piping up high.	$3,899
4450-0184	Hose bib female direct tank inlet 3/4" with valve. Location Driver side pump panel.	$277
4450-0185	3" Tank to Pump Electric Over Air Actuated Valve. (For Pump&Roll Operation)	$1,559
4450-0186	2.5" Tank Fill "AutoFill" Automatic Tank Fill Valve. Location: [#LOC].	$7,261
4450-0188	Rear tank dump. Includes painted steel assembly with manually actuated valve on top of dump assembly. Includes integral 6001 swivel chute with manual telescopic extension and two locks one each side.	$3,417

4450-0189	Rear tank dump. Includes stainless steel assembly with manually actuated valve on top of dump assembly. Includes integral 6001 swivel chute with manual telescopic extension and two locks one each side.	$4,704
4450-0190	Rear tank dump. Includes painted steel assembly with electric actuated valve on top of dump assembly. Includes integral 6001 swivel chute with manual telescopic extension and two locks one each side.	$4,813
4450-0191	Rear tank dump. Includes painted steel assembly with electric actuated valve and integral manual extension chute.	$2,326
4450-0192	Rear tank dump. Includes stainless steel assembly with electrically actuated 1070 dump valve. Includes integral swivel chute with manual extension.	$6,236
4450-0193	Driver and officer side tank dumps. Includes stainless steel assembly with electrically actuated valve. For use with flip chute.	$4,442
4450-0195	Rear tank dump. Includes stainless steel assembly with manually actuated valve on top of dump assembly with quick release pin to allow for folding down handle. Includes integral swivel chute with manual extension.	$4,458
4450-0196	Slip-on stainless steel dump extension chute.	$770
4450-0197	6" Rear Jet Dump 36" Extension Chute w/6" Female Cam Lock.	$815
4450-0199	Reverse push/pull handle on 3" tank to pump Akron manual valve. The "in" position will be open and the "out" position will be closed.	$49
4450-0201	4" Rear Direct tank fill. Includes Fireman Friend 4" valve with 5" Storz elbow adapter and cap. Located to [#LOC] of the rear body	$2,487
4450-0202	Rear tank dumps. Includes stainless steel assembly with electrically actuated valve with flip chute.	$3,430
4450-0203	Rear tank dump. Includes stainless steel assembly with electrically actuated valve. For use with slip on extension and chute.	$2,222
4450-0205	Direct 4" Tank Fill Akron Electric Valve with Dual Control (1) control at the valve and (1) at the pump operator panel. Valve location [#LOC].	$4,107
4450-0206	4" rear direct tank fill. Includes handwheel control, swivel with droop with cap and retainer. Include 3/4" bleeder. Located to [#LOC] of the rear body.	$2,360
4450-0207	3" Tank to Pump Electric Over Air Actuated Valve. (For Pump&Roll Operation)	$1,106
4450-0208	Rear Tank Inlet 3". Includes Water Level Gauge Located in B1 Compartment.	$1,624
4450-0210	2" tank fill Akron electric valve & Navigator Pro 9323 Controller.	$2,396
4450-0211	2.5" Direct Tank Fill "AutoFill" Automatic Tank Fill Valve. Waterous (Auto Fill) shall be "T" into both side 6" intake, front, and rear 5" intake with a special manifold and check valves.	$4,945
4455-0004	Gasket Material around all Discharges, Intakes and Handle Slots on Pump Panel to hold in heat of Module Plumbing	$883
4460-0000	Air outlet w/snubber valve. Location: [#LOC].	$242
4460-0001	Air blow-out for: [#LOC].	$227
4460-0002	Hose reel blow-out, primary.	$231
4460-0004	Tags mechanically fastened with screws.	$376
4460-0005	Fire Shop Bezel Chrome - Standard 2.5" Gauge	$35
4460-0006	Radiator Fill Valve on Pump Panel.	$267
4460-0007	Air outlet with snubber valve and 25' hose. Location: [#LOC].	$272
4460-0008	Air Outlet Valve to operate off of CAFS System Compressor. Location: [#LOC].	$334
4460-0009	Pump panel tags, special color. (Must specify.)	$287
4460-0010	Pump panel tags - Special label. (Must specify.)	$244
4460-0011	OK To Pump Light - Pump Panel Mounted - Green .75" Light. Located near pressure governor.	$63
4460-0013	Air Outlet Valve. Plumbed from the reservoir tank. Includes quarter turn valve. Location: [#LOC].	$286
4460-0014	Check Engine and Stop Engine light mounted on pump panel. Wire lights to pump module mounted alarm.	$245
4460-0017	Class 1 Color Coded Bezel Chrome - 2.5" Gauge.	$23
4460-0018	Class 1 color coded bezel, chrome - 3.5" gauge.	$25
4460-0021	Diagramatic Vinyl Side Mount Pump Panel Label of the discharges & preconnects specified color coding for handles and gauges.	$1,746
4460-0022	Stainless steel plates for all discharges and intakes behind the pump panel access doors, each side. Stainless steel plates to be mounted on the valve with rubber gasket to seal opening.	$1,018
4460-0023	Span Color Coded Bezel - 2.5" Gauge	$8
4460-0024	Span Color Coded Bezel - 3.5" Gauge	$8
4460-0025	Cut-out on officer side pump panel with expended metal. Cut-out to be approx. 14" wide x 6" high to provide sight to cord reel in pump house. Cut-out to be located above cord reel rollers on pump panel.	$138
4460-0026	CAFS Air Outlet Valve Recess Driver side Pump Panel with door.	$337
4460-0027	Diagramtic vinyl rear mount pump panel labeling of discharges and/or preconnects. Includes rear panel (with hosebed deck gun) and front discharge layouts (two (2) views- No top view).	$1,746
4460-0028	Tags Mechanically Fastened with Screws with exception of the tags on the push/pull rods.	$376
4460-0029	Vision Mark Tags Shall Be Install IPOS Plastic Tag.	$635
4460-0030	L1 forward body compartment pump panel mount. Includes structural build out for panel mount.	$1,553
4460-0031	Attach Escutchion Plates with Thunb Latch on Officer Side.	$166

4460-0032	Push/Pull Rod Extrusion at pump panel to be thru bolted with nuts IPOS nut cert.	$85
4460-0033	CAFS Air outlet .75 valve with Handle and Quick Disconnect. Location: [#LOC]	$376
4460-0034	Cab jack access door. Located on officer side pump panel in upper rearward area. Includes twist and turn latch.	$232
4460-0035	Diagramtic Vinyl Overlay Rear Mount Pump Panel. All Foam controls and Foam Discharges Yellow, Intakes Blue, Water Discharges Red, and Pump and Engine Gray.	$1,746
4460-0037	Fire Shopp NPFA Color Coded "T" handles with color coded tags.	$44
4460-0038	Diagramtic Vinyl Overlay Pump Operator Panel. All controls and Discharges, and Intakes.	$1,746
4460-0039	Innovative Control Color Coded Bezel Chrome - 2.5" Gauge	$96
4460-0040	Discharge Escutcheon Plates NFPA Color Coded to match photos in file with vinyl overlay shall be around each discharge outlet on driver and officer pump panel.	$459
4460-0042	Diagramtic Top Mount Pump Panel Label of the discharges & preconnects specified color coding for handles and gauges..	$4,426
4460-0043	Pump panel tags mechanically fastened with screws.	$376
4460-0045	Innovative Controls Tags, all plumbing, and body 1x3 tags shall be Innovative Controls.	$647
4460-0046	Innovative Control Noshok 4" Master Gauge Bezel.	$104
4460-0048	Innovative Control 7.75" Dia Pump Intake Color Code Bezel Trim Ring.	$111
4460-0049	Innovative Control 4" Dia Pump Intake/Discharge Color Code Bezel Trim Ring.	$102
4460-0050	Innovative Controls Foam Discharge Identifing label shall be installed in recessed areas on each foam discharge gauge bezel.	$7
4460-0051	Speaker cut out with "E-ONE" stainless steel grille. Located pump operator panel. For dealer install speaker.	$119
4460-0059	Class 1 color coded bezel gauge trim ring - 2.5" Gauge	$17
4460-0060	Color coded trim rings around all inlets and outlets for both driver and officer side. The side discharge outlets shall be color coded and labeled to correspond with the discharge identification tag.	$1,181
4460-0061	Air outlet with 3/8" valve 1/4 turn, and 25' hose. Location:driver side	$321
4460-0062	Air outlet w/3/8" valve. Location: Officer side pump panel.	$266
4460-0063	Innovative Control 5.5" Dia Pump Intake/Discharge Color Code Bezel Trim Ring.	$102
4460-0066	Diagramtic Vinyl Pump Panel Label of the discharges & preconnects outlets. Location; On forward wall of L1 compartment adjacent to pump operator panel. Specified color coding.	$1,746
4460-0067	Officer side pump panel shall include an access door to provide access to the cab tilt switch and manual jack as mounted.	$177
4460-0069	Class 1 color coded bezel gauge trim ring - 3.5" gauge.	$19
4465-0001	Fire Commander pressure governor. Includes engine gauges. Detroit S60 only.	$4,211
4465-0003	FRC In-Control pressure governor. Includes engine and master pump gauges.	$4,988
4465-0005	Class 1 Captain pressure governor.	$2,640
4465-0007	Class1 Command Master pressure governor. Includes pump intake pressure and discharge pressure, throttle, relief, tank level(s), water, oil, volt and tachometer.	$4,833
4465-0008	FRC PumpBoss Pressure Governor. Includes engine gauges.	$2,452
4465-0009	FRC Pro-S Pressure Governor	$2,589
4465-0010	FRC In-Control pressure governor TGA200. Includes engine transmission and master pump gauges.	$5,042
4465-0011	Class 1 TPG pressure governor. Includes, water, oil, volt and tachometer.	$2,034
4465-0012	Fire Commander II pressure governor. Includes engine gauges, Pump Ditigal Master Gauges. Detroit engines only.	$4,825
4465-0013	FRC In-Control pressure governor. Includes engine and master pump gauges.The discharge pressure display shall show pressures from 0 to 4000 kPa. The intake pressure display shall show pressures from -100 to 4000 kPa.	$4,988
4465-0015	FRC In-Control pressure governor TGA300. Includes engine, transmission, and master pump gauges.	$3,672
4465-0017	FRC PumpBoss pressure governor PBA400. Includes engine monitor gauges.	$2,452
4465-0018	FRC In-Control pressure governor TGA400. Includes engine, transmission, and master pump gauges.	$3,672
4465-0020	Class 1 TPG Plus pressure governor. Includes master intake and discharge gauges, water, oil, volt and tachometer.	$2,717
4465-0021	FRC In-Control pressure governor TGA400-A10. Includes engine, transmission, and master pump gauges.	$3,672
4465-0022	Class 1 Sun Guard Pressure governor cover. Durable steel construction in black matte finish. Flips up to read controls; lays flat when not in use.	$206
4475-0000	Pump certification 750-2250 GPM	$2,340
4475-0002	UL Testing - the unit will be third party tested and certified by Underwriters Laboratories Inc. (UL). UL will issue a Certificate of Automotive Fire Apparatus Examination and Test stating the unit's compliance with the required pump sections of NFPA.	$2,654
4475-0003	Pump certification 750-2250 GPM. To be performed by UL (Underwriter's Laboratories). Stainless steel product only.	$2,340
4475-0004	Pump certification 250-500 GPM	$1,678
4475-0007	Factory pump test only, not thrid party.	$1,678
4475-0008	Pump Certification 3000 GPM.	$2,496
5000	**Electrical**	

5010-0002	Multiplex electrical system for pumper / tanker / rescue.	$3,160
5010-0003	Multiplex modem kit. Includes cable, modem, and adapter harness.	$827
5010-0004	Multiplex data logger.	$587
5010-0010	Multiplex cab/non-multiplex body electrical system for pumper / tanker / rescue.	$3,160
5010-0013	Vehicle data recorder - 2009 NFPA compliant. Includes occupant detection with display. Display location: [#LOC].	$2,327
5010-0015	Additional CrewGuard display for use with VDR. Location: [#LOC].	$447
5010-0016	Multiplex electrical system for rear mount pumper.	$3,820
5010-0024	Modem for use with the E-ONE multiplex electrical system.	$577
5010-0036	V-MUX Electrical system for pumper / tanker / rescue.	$3,160
5010-0037	Multi-color touch screen display for multiplexed based electrical system. Location: [#LOC].	$1,711
5010-0049	Vehicle data recorder - 2009 NFPA compliant. Includes occupant detection shown in multiplex display. E-ONE chassis only.	$2,008
5010-0051	HVAC Controlled through V-MUX display(s).	$1,056
5010-0052	Vista IV touch screen display for V-MUX electrical system. Location: [#LOC].	$1,933
5010-0057	GPS Module for V-MUX electrical system. Includes antenna. Requires Vista display.	$1,485
5010-0059	VFD Text display for V-MUX electrical system. Location: [#LOC].	$717
5010-0060	D-TEK Transmitter for V-MUX electrical system.	$1,360
5010-0061	D-TEK Receiver for V-MUX electrical system. (Shipped loose)	$529
5010-0065	Pump and roll screen for multiplex display. Reference specification for details.	$1,376
5050-0000	Vanner Bravo 1800 watt inverter. For use with (2) quartz lights. Includes on/off switch in cab. Inverter to be mounted in a body compartment as close to the chassis batteries as practical (20' max cable length).	$2,573
5050-0001	Vanner 2600 watt inverter. For use with quartz lights. Includes on/off switch in cab. Inverter to be mounted in cab below rear wall bench seat.	$3,973
5050-0002	Vanner 2600 watt inverter. For use with (2) quartz lights. Includes on/off switch in L1 compartment, next to breaker box. Inverter to be mounted in a L1 up high (20' max cable length).	$3,973
5050-0003	Vanner 2600 watt inverter. For use with (2) quartz lights. Includes on/off switch in driver overhead console. Inverter to be mounted in L3 up high forward (20' max cable length).	$3,973
5050-0015	Vanner 2600 watt inverter, (NFPA rating at 1400 watts). Includes on/off switch in L1 compartment. Inverter to be mounted in a L1, forward wall up high (20' max cable length).	$3,973
5050-0016	Vanner 2600 watt inverter, (NFPA rating at 1400 watts). Inverter to be mounted in a L1, on permanent shelf (20' max cable length).	$3,973
5100-0000	Foot switch to control air horns located [#LOC].	$106
5100-0001	Switch circuit three way. Includes (1) additional switch. An additional switch required for more than two locations. Location: [#LOC].	$149
5100-0002	Momentary switch with 6' pendant for cab tilt. Yellow weatherproof push button at end of coiled cord. Location of switch plug-in: [#LOC]	$336
5100-0006	Foot switch to control Q2B located [#LOC].	$106
5100-0007	Foot switch to control electronic siren located [#LOC].	$106
5100-0009	Audible door ajar alarm wired through door ajar light.	$55
5100-0010	Additional push button hose reel switch. Location: [#LOC].	$166
5100-0011	Switch 12V for 120-240V (EA). Location: [#LOC].	$385
5100-0014	Air horns to be interlocked through the master warning switch.	$89
5100-0015	Back-up alarm override momentary switch located at the cab dash. The switch will allow for overriding the back-up alarm and reset after transmission is shifted again.	$52
5100-0017	Wire rear amber through ignition switch.	$71
5100-0018	Primary Warning switch to activate all warning lights and siren controls to be located driver's side overhead console.	$159
5100-0019	Additional amber warning light override momentary switch located at the cab warning light switch panel. The switch will allow for overriding the rear additional amber warning lights and reset after ignition is turned off.	$290
5100-0020	Switch additional 12 volt/15 amp toggle. Location and function: Under driver side cab dash for master battery override.	$180
5100-0021	Opticom switch wired through upper level warning switch.	$68
5100-0022	Push-button hose reel switch. Location: [#LOC].	$166
5100-0023	Provide a single switch on the cab dash (within reach of the driver and officer) for locking and unlocking of all roll-up doors. The switch is to be red. Label RUD Lock.	$278
5100-0029	Stirrup style hose reel switch. Location: [#LOC].	$166
5100-0030	Additional stirrup stlye hose reel switch. Location: [#LOC]	$166
5100-0036	Additional programming instructions: [#LOC].	$111
5100-0038	Hose Reel rewind switch located in rubrail.	$85
5100-0039	Foot switch(es) mounted on a 45 degree bracket.	$72
5100-0040	Micro switch with 2.75'' lever upgrade. Location: (2) hosebed cover, (1) ladder rack.	$71
5100-0042	Ramsey control with 3' cord for cab tilt in addition to standard toggle. Red/Black weatherproof push buttons at end of cord. Location of switch plug-in: [#LOC].	$336
5100-0044	Rear cab heater switch. Function and location: [#LOC].	$180
5100-0045	Thermostatic controls for pump compt heaters. Thermostat set at freezing temp.	$227

5100-0046	Cut-off switch for Q2B main power. Switch to be accessible from driver's seat.	$245
5100-0047	Switch household 110V w/ weaterproof cover. Location and function: cab mounted next to air compressor for 120V air compressor	$180
5100-0048	Magnetic door ajar switches IPO std for all body compt doors.	$654
5100-0049	Ramsey control with 8' cord for cab tilt in addition to standard toggle. Red/Black weatherproof push buttons at end of cord. Location of switch plug-in: [#LOC].	$336
5100-0050	Push button testswitch for tank level gauge, push button wired "hot" to batteries to allow checking tank level in fire station without having to power up truck electrical system. Located on operator pump panel.	$314
5100-0052	Household toggle switch for 110V. Switch plate will be a Crouse Hinds TP7256. Switch will be wire to top plug of duplex recept on rear, and be located next to recept. One switch for each top duplex.	$396
5100-0056	Hose deployment switch in front bumper tray. Includes hinged plate on bottom of bumper tray with switch on floor and indicator light on pump panel. Requires tray without slats. Location: [#LOC].	$531
5100-0058	Master battery disconnect switch. Location: driver seat riser ipo riser door. Includes overlay plate.	$432
5100-0059	Back-up alarm / rear back up lights override momentary switch located at the cab dash. The switch will allow for overriding the back-up alarm & back-up lights and reset after transmission is shifted again.	$52
5100-0060	Switch for 12V quartz lights to be located on officer side overhead console IPOS.	$111
5100-0061	Door ajar alarm override momentary switch located at the cab dash. The switch will allow for overriding the door ajar alarm and reset after transmission is shifted again.	$180
5100-0063	Ramsey control with 10' cord for cab tilt. Red/Black weatherproof push buttons at end of cord. Location of switch plug-in: next to manual cab tilt pump	$336
5100-0065	Switch pump compt light(s). Includes door switches on pump module access doors to activate light(s). Location: top mount pump panel.	$305
5100-0066	Solid state dimmer switch. Location and function: [#LOC].	$116
5100-0069	Additional panel mounted Go-Light spot control. Location: officer side cab switch panel.	$178
5100-0072	Locate Q2B brake in officer side overhead console IPO standard location of driver side overhead console.	$50
5100-0073	Additional programming instructions: wire officer rear quartz light ajar switch through ladder rack controls.	$111
5100-0086	Additional programming instructions: clear warning lights to remain on in bloking mode in accordance with Maryland Code Allowance.	$111
5100-0087	Ramsey control plug-in for cab tilt in addition to standard toggle. Does not include tether controller. Location: [#LOC].	$188
5100-0088	Linemaster Twin 491-S foot switch to control air horns and Q2B located [#LOC].	$342
5100-0089	Foot switch to control electric fire bell located [#LOC].	$106
5100-0090	Foot switch to control Scream Eagle siren located [#LOC].	$106
5100-0091	Switch 12V for 110-240V (EA). Location: cab switch panel for rear body quartz light(s).	$385
5100-0093	Master battery disconnect switch. Location: driver seat riser facing outward, behind access door.	$471
5100-0094	Ramsey control with 15' cord for cab tilt in addition to standard toggle. Red/Black weatherproof push buttons at end of cord. Location of switch plug-in: [#LOC].	$336
5100-0095	Switching controlled through the Multiplex display for 120-240V devices (EA). The 120-240V Multiplex switching utility shall be used for: [#LOC].	$385
5100-0098	Switch additional rocker lock-out safety style. Location and function: [#LOC].	$180
5100-0099	Momentary rocker switch for the Federal Rumbler (secondary siren) located on the driver and officer side overhead panels. The switches will allow for overriding the Federal Signal Rumbler siren and reset after ignition is turned off.	$290
5100-0100	Switch additional (2) position shall be installed and properly labeled to enable operator to activate the OEM traffic horn or air horn. The switch shall be located: rear of body driver side approximately 65" above ground level.	$180
5100-0101	Switch, additional 12 volt/15 amp. Location and function: driver side pump panel for radio speaker as mounted on or near pump panel.	$180
5110-0003	High impact orange ABS plastic handheld spotlight SL-45 Location: [#LOC].	$199
5110-0004	Alternating flasher for headlights.	$307
5110-0005	Pre-wire for trailer hitch. Includes stop, left turn, right turn, marker and ground wires. Does not include connector.	$217
5110-0007	Audible indicator in cab with rear button. The rear button will be located on the driver's side at the rear behind the hand rail (if equipped).	$315
5110-0008	Audible indicator in cab with rear buttons. The rear buttons will be located, one each side at the rear, behind the hand rail (if equipped).	$347
5110-0009	Clock Digital 12/24 Waterproof mounted in cab officer's overhead dash.	$572
5110-0010	Receptacle 12V 175A portable winch. Located at rear near trailer hitch.	$321
5110-0011	Vehicle Information Control Center for E-One Multiplexed trucks located on Driver's Side.	$5,438
5110-0012	Vehicle Information Control Center for E-One Multiplexed trucks located on Officer's Side.	$5,438
5110-0013	Vehicle Information Control Center for E-One Multiplexed trucks located on Driver's Side. Display Only, No computer.	$2,310

5110-0014	Vehicle Information Control Center for E-One Multiplexed trucks located on Officer's Side. Display Only, No computer.	$2,310
5110-0015	Vehicle Information Control Center for E-One Multiplexed trucks located at center of engine cover mounted on swivel bracket.	$5,779
5110-0017	Back-up alarm 97 dB.	$92
5110-0018	12 volt 12 gauge constant hot lead (24" long) with ground wire. Location: [#LOC].	$72
5110-0024	Back up alarm Grote 107 dB(A).	$240
5110-0025	Back up horn system. Includes 12v independent horn (NAPA 730-1047) below officer's side dash, 12v independent horn (NAPA 730-1047) at rear of body and Ramsey control switch with 25' tether at rear of body.	$754
5110-0026	12 volt 12 gauge wired through ignition lead (24" long) with ground wire. Location: [#LOC].	$72
5110-0027	Powered equipment rack alarm. To activate while rack is in motion.	$62
5110-0028	Code3 model 700 flasher for alternating headlights.	$301
5110-0030	Flasher alternating for headlights Whelen model UHF2150A.	$321
5110-0031	12 volt 12 gauge wired to chassis reverse (24" long) with ground wire. Location: back wall of rear bench seat riser.	$72
5110-0032	Clock digital 12/24 waterproof mounted in [#LOC].	$572
5110-0034	4 Pin trailer wiring flat connector. Includes matching plug. Requires trailer wiring pre-wire option.	$85
5110-0037	Additional wiring instructions: [#LOC].	$332
5110-0039	Clock Digital 12/24 Waterproof mounted in cab officer's switch panel.	$572
5110-0040	Indicator light. Color: [#COL]. Location and function: [#LOC].	$104
5110-0041	7 pin trailer wiring connector. Requires trailer wiring pre-wire option.	$113
5110-0042	Trailer wiring and connector for 2009 NFPA 1901 Type I, Type II or Type III trailer. Includes model 12-907 connector on body. Stop/turn/tail circuits shall be connected, remaining wires to be coiled up for future use. Trailer end 12-906 shipped loose.	$419
5110-0043	Back-up alarm Federal Reactor model 210350 self-adjusting.	$163
5110-0044	ABS cover for multiplex PDMs' located in the pump module.	$86
5110-0046	4 Pin trailer wiring heavy duty round connector. Includes matching plug. Requires trailer wiring pre-wire option.	$93
5110-0052	12V power distribution module. Includes (6) battery hot and (6) switched hot circuits. 100 amps max (IATS). Location: [#LOC].	$278
5110-0060	12 volt 4 gauge constant hot lead (24" long) with ground wire. Location: [#LOC].	$219
5110-0065	Lighted bumper guide (PR). Bores model 848211 located (1) each side of front bumper extension.	$370
5110-0066	Switches in cab (2) for controlling (2) TNT DT 4.0 diesel engine hydraulic power units. Switches to be kill/run/start with indicator light. Run wiring into dunnage area with extra length for dealer installation.	$958
5110-0067	Back up alarm Preco 97 dB(A) warble tone.	$243
5110-0068	Handheld flashlight, orange Streamlight Litebox flashlight with vehicle mount system. Location: [#LOC].	$172
5110-0069	Back up alarm ECCO model 410 97 dB(A) grommet mount.	$187
5110-0070	Vehicle Information Control Center for E-One Multiplexed trucks swivel pedestal mount located at center between driver and officer. Mid engine cabs only.	$5,779
5110-0079	Back up alarm Ecco model SA917 87-112dB.	$213
5110-0080	EMI/RFI Testing and Certification	$4,917
5110-0082	Receptacle 12V 175A portable winch. There will be a total of four, locate one at each of the receiver.	$1,284
5110-0083	Receptacle 12V 175A portable winch. There will be a total of three, locate one at each of the side and rear receivers.	$963
5110-0087	Tekonsha model Prodigy 2 trailer brake controls wired to connector. Control located in cab accessible to driver. Requires 9-pin connector.	$802
5110-0088	Lighted bumper guide (PR) with angled support brackets. Bores model 848211 located (1) each side of front bumper extension.	$480
5110-0089	Back-up alarm Ecco model 575 107dB.	$157
5110-0090	Breaker box grounding cable. 10' 2Ga cable attached to ground side of breaker box. Includes clamp on end of cable for use with aerial ground pad.	$210
5110-0109	Indicator light, Weldon 9186-2300. Color: [#COL]. Location and function: [#LOC].	$104
5110-0110	Receptacle 12V 175A portable winch. Located at front near receiver.	$321
5110-0112	Back up alarm Preco model 1040.	$162
5110-0113	Indicator light. Color: Red. Location and function: pump operator panel for foam pump on.	$104
5110-0114	Powered equipment rack alarm; Preco 97dB(A) warble tone. To activate while rack is in motion and through park brake.	$243
5110-0119	CAT V cable run. This will include CAT V wire, non-plenum. Run cable from microphone box on pump panel to center overhead in cab.	$129
5110-0120	Receptacle 12V 175A portable winch. There will be a total of three, locate one at each of the side and front receivers.	$963
5110-0124	Audible indicator in cab with rear buttons. The rear buttons will be located [#LOC].	$347
5110-0125	Receptacle 12V 175A portable winch. There will be a total of (2), locate one (1) on each side near under body receivers.	$643

5110-0132	Indicator light. Color: Green. Location and function: driver side overhead for jake brake "on".	$104
5130-0000	Cord reel 150 feet of 12/3 black cord installed on the [#LOC] with an electric rewind.	$1,654
5130-0001	Cord reel electric with 200' of 10/3 black cable. Locate [#LOC].	$1,954
5130-0002	Cord reel electric with 200' of 10/3 yellow cable. Location(s): [#LOC].	$2,206
5130-0003	Cord reel electric with 200' of 10/4 black cable. Location: [#LOC].	$2,201
5130-0004	Cord reel electric with 200' of 10/4 yellow cable. Location [#LOC].	$2,855
5130-0006	Cord reel rollers mounted on reel in [#LOC].	$319
5130-0007	Cord connector. Daniel Woodhead 3 wire NEMA 5-15 straight blade female located on cord for reel in [#LOC].	$73
5130-0008	Cord connector. Daniel Woodhead 3 wire NEMA L5-15 twist lock female located on cord for reel in [#LOC]	$75
5130-0009	Cord connector. Daniel Woodhead 3 wire NEMA L5-20 twist lock female located on cord for reel in [#LOC].	$103
5130-0010	Cord connector. Daniel Woodhead 4 wire NEMA L14-20 twist lock female located on cord for reel in [#LOC].	$103
5130-0011	Cord connector. Daniel Woodhead 3 wire NEMA L6-20 twist lock female located on cord for reel in [#LOC]	$103
5130-0012	Junction box Circle-D with four (4) 3-wire NEMA L5-15 110 volt 15 amp twist lock receptacles. Located on cord for reel in [#LOC].	$673
5130-0013	Junction box Circle-D with four (4) 3-wire NEMA L5-20 110 volt 20 amp twist lock receptacles. Located on cord for reel in [#LOC].	$673
5130-0014	Circle D wall/floor mounting box. Locate box for use with reel in or on [#LOC].	$132
5130-0015	Junction box Circle-D with two (2) 15 amp straight blade and two (2) 20 amp twist lock receptacles. Located on cord for reel in [#LOC].	$850
5130-0016	Junction box Circle-D with all twist lock, 2-120V and 2-240V outlets. Located on cord for reel in [#LOC].	$833
5130-0017	Junction box Woodhead with four (4) NEMA L5-15 110 Volt 15 Amp twist lock receptacles. Located on cord for reel in [#LOC].	$1,339
5130-0018	Junction box, Daniel Woodhead, with four (4) NEMA L5-20 110 volt 20 amp twist lock receptacles. Located on cord for reel in [#LOC].	$1,070
5130-0019	Cord reel 150 feet of 12/3 yellow cord installed on the [#LOC] with an electric rewind.	$1,716
5130-0022	Cord reel rollers mounted through panel. Location(s): [#LOC].	$319
5130-0024	Electric cord reel rewind switch. Switch located [#LOC].	$106
5130-0026	Cord connector. Fire Power 3 wire 20A/110V female located on cord for reel in [#LOC].	$539
5130-0027	Cord connector. Duraline 4 wire 20A/220V female located on cord for reel in [#LOC].	$141
5130-0028	Cord reel rollers mounted on reel.	$319
5130-0030	Junction box Circle-D with one (1) straight blade and three (3) twist lock receptacles. Located on cord for reel in [#LOC].	$850
5130-0031	Cord reel electric/manual back-up with 200' of 10/3 black cable. Crank handle mounted next to reel. Locate [#LOC]	$2,348
5130-0032	Cord reel electric with 150' of 10/4 yellow cable. Location [#LOC]	$2,855
5130-0033	Junction box Circle D with four (4) 3-wire NEMA 5-15 110 Volt 15 amp straight blade receptacles. Located on cord for reel in [#LOC].	$673
5130-0034	Cord reel Akron electric with 200' of 10/3 yellow cable. Location(s): [#LOC].	$2,107
5130-0035	Junction box Circle-D with (3) L5-15 and (1) L5-20 110Volt twist lock receptacles. Located on cord for reel in [#LOC].	$673
5130-0036	Diamond plate cord reel cover over reel. Use rollers provided with reel on cover IPO E-One supplied if applicable. Location: [#LOC]	$556
5130-0037	Cord reel Akron electric with 200' of 10/4 yellow cable. Location(s): [#LOC]	$2,757
5130-0038	Junction box Circle-D with (2) L5-20 twist lock and (2) 5-20 110Volt straight blade duplex receptacles. Located on cord for reel in [#LOC].	$673
5130-0039	Roller support bracket up high at compt opening for reel in [#LOC].	$241
5130-0040	Hannay PWM (Pulse Width Modulator) control for reel. Mounted next to switch for cord reel in [#LOC].	$599
5130-0041	Cord reel rollers bracket mounted on top of [#LOC].	$319
5130-0042	Junction box Circle-D with four (4) 3-wire Nema 5-20 110Volt 20 Amp duplex receptacles. Located on cord for reel in [#LOC].	$745
5130-0044	Junction box Akron with (2) 5-20 125v 20 Amp duplex recepts and (2) L5-20 125v 20 Amp twist lock recepts. Located on cord for reel in [#LOC].	$529
5130-0045	Akron model EJB-VMT-TP mounting box. Locate box for use with reel in or on [#LOC].	$258
5130-0046	Junction box Circle-D with one (1) 5-20 straight blade and three (3) L5-20 twist lock receptacles. Box wired as 240v with individual circuit breakers on box. Located on cord for reel in [#LOC].	$850
5130-0048	Junction box Circle-D with (2) NEMA 5-20 120V GFCI duplex and (2) NEMA L6-20 220V twist lock receptacles. Located on cord for reel in [#LOC].	$850
5130-0049	Cord reel electric for 200' of 10/3 cable. Cable not included. Location(s): [#LOC]	$1,974
5130-0054	Cord reel electric with 200' of 8/3 black cable. Locate [#LOC]	$3,348
5130-0055	Cord reel rollers mounted on support bracket. Location(s): [#LOC]	$319

5130-0056	Junction box Woodhead with (3) NEMA L5-15 110 Volt 15 Amp twist lock receptacles and (1) NEMA 5-20 110 Volt 20 Amp household receptacle. Located on cord for reel in [#LOC].	$1,339
5130-0057	Mounting box for Woodhead junction box. Locate box for use with reel in or on [#LOC].	$241
5130-0058	Junction box Akron with four (4) 3-wire NEMA L5-20 110 volt 20 amp twist lock receptacles. Located [#LOC].	$529
5130-0059	Junction box Circle-D with four (4) FirePower FP11 110Volt 20 Amp receptacles. Located on cord for reel in [#LOC].	$1,098
5130-0061	Cord reel electric with 250' of 10/3 black cable. Locate [#LOC].	$2,307
5130-0062	Junction box Circle-D with (2) 5-20 straight blade and (2) twist lock receptacles; (1) L5-20 and (1) L5-15. Located on cord for reel in [#LOC].	$850
5130-0063	Cord reel electric with 200' of 12/3 black cable. Locate [#LOC].	$2,307
5130-0067	Junction box Akron with (4) 5-20-GFCI 125v 20 Amp duplex recepts. Includes 12" pigtail with L14-20 connector and rubber feet. Located on cord for reel in [#LOC].	$529
5130-0068	Cord reel electric with 200' of 10/3 yellow cable. Location(s): [#LOC].	$2,206
5130-0069	Cord reel electric with 250' of 10/3 yellow cable. Locate [#LOC].	$2,622
5130-0070	Cord connector. Hubbell 4 wire NEMA L14-20 twist lock female located on cord for reel in [#LOC]	$103
5130-0073	Cord reel electric low profile with 200' of 10/3 yellow cable. Location(s): [#LOC].	$2,797
5130-0074	Cord connector. Daniel Woodhead 3 wire NEMA 5-20 straight blade female located on cord for reel in pump module storage pan officer side.	$73
5130-0079	Cord reel electric with 150' of 10/3 yellow cable. Location(s): [#LOC].	$2,026
5130-0080	Junction box Circle-D with four (4) 3-wire NEMA L5-20 110 volt 20 amp GFCI twist lock receptacles. Located on cord for reel in [#LOC].	$850
5130-0081	Cord reel electric model ECR 1620-17-18 with 200' of 10/4 yellow cable. Location [#LOC].	$2,855
5130-0082	Cord connector. Daniel Woodhead 3 wire NEMA L5-30 twist lock female located on cord for reel in [#LOC].	$146
5130-0083	Slideout cord reel roller assembly. For cord reel located in [#LOC].	$885
5130-0084	Junction box Circle-D with one (1) 15 amp straight blade and three (3) 15 amp twist lock receptacles. Located on cord for reel in [#LOC].	$850
5130-0087	Cord connector. Daniel Woodhead 4 wire NEMA L14-30 twist lock female located on cord for reel in [#LOC].	$146
5130-0088	Junction box Woodhead with two (2) NEMA L5-20 110V 20A twist lock and two (2) NEMA 5-20 110V 20A duplex receptacles. Located on cord for reel in [#LOC].	$1,214
5130-0090	Junction box Akron with (4) 5-15 120v 15 Amp duplex recepts. Located on cord for reel in [#LOC].	$529
5130-0091	Roller support bracket for reel. Rollers and bracket shall be mounted: [#LOC].	$241
5130-0093	Cord reel electric. Chrome / stainless with 200' of 10/3 yellow cable. Location(s): [#LOC].	$2,355
5130-0094	Cord reel electric with 200' of 10/3 black cable model ELFCR1622-14-16. Locate [#LOC].	$1,954
5130-0096	Cord reel electric model ECR 1624-14-15 with 200' of 10/4 yellow cable. Location [#LOC].	$2,855
5130-0101	Cord reel electric with 150' of 10/4 yellow cable. Reel to include strap (Comet) brake to provide drag pressure to reel axle. Location [#LOC]	$2,926
5130-0102	Junction box Circle-D with four (4) 3-wire 120Volt 20 Amp Hubbel model HBL7310B twist lock receptacles. Located on cord for reel in [#LOC].	$850
5130-0103	Junction box Circle-D with four (4) 3-wire NEMA L5-20 110 volt 20 amp GFCI twist lock receptacles with 220V feed. Located on cord for reel in [#LOC].	$850
5150-0003	Weldon auxiliary turn signal model 9186-8560 (PR). Location: [#LOC]	$187
5150-0007	Whelen 600 series LED vertical mount tail lights. Includes LED stop/tail, arrow turn and halogen back-up lights with vertical Cast 3 housing and weatherproof connectors.	$1,196
5150-0008	Whelen 600 series LED vertical mount tail lights. Includes LED stop/tail, arrow turn and halogen back-up lights with vertical Cast 4 housing and weatherproof connectors.	$1,464
5150-0010	Whelen 600 series LED horizontal mount tail lights. Includes LED stop/tail, turn and halogen back-up lights. Available on G067, L193 and Q100/114 only. With weatherproof connectors.	$1,315
5150-0011	Whelen 600 series LED vertical mount tail lights. Includes LED stop, tail, turn and halogen back-up lights with vertical Cast 3 housing and weatherproof connectors.	$1,288
5150-0012	Whelen 600 series LED vertical mount tail lights. Includes LED stop/tail, turn and halogen back-up lights with vertical Cast 4 housing and weatherproof connectors.	$1,373
5150-0015	Whelen 600 series vertical mount taillights. Includes incandescent stop/tail, arrow turn and halogen backup lights with vertical Cast 4 housing and weatherproof connectors.	$665
5150-0017	License plate light LED with chrome housing located at the rear of the body.	$123
5150-0018	Marker lights additional amber LED Trucklite Model 21 (PR). Location: [#LOC]	$159
5150-0019	Marker lights addtional red LED Trucklite Model 21 (PR). Location: [#LOC]	$159
5150-0020	Weldon Model 1010 LED / incandescent taillights. Includes red LED stop/tail/turn and clear incandescent backup.	$344
5150-0022	Marker light LED body package. Commercial pumper bodies only.	$729
5150-0023	Weldon Model 1010 LED / incandescent tail lights. Includes red LED stop/tail, amber LED turn and clear incandescent back-up.	$501
5150-0025	Marker light LED body/cab package. E-One custom cab and pumper or tanker body only.	$1,223
5150-0032	Bracket license plate at rear of body.	$36
5150-0036	Truck-Lite LED tail lights. Includes 4" red LED stop/tail, amber LED turn and clear LED back-up.	$771
5150-0037	Zico backing light (PR) with white pained housing model #ZQL-RV-H7614. Location: [#LOC].	$362

5150-0039	Marker lights Britax amber/red rubber housed mounted on the rear body corners angled down.	$271
5150-0042	Federal Signal LED tail lights. Includes 4" diameter red LED stop/tail, amber turn and LED clear back-up.	$525
5150-0050	Zico backing lights (PR) with polished stainless steel housing model #ZQL-SS-H7614. Location: [#LOC].	$557
5150-0052	Code 3 65STK4 vertical mount taillights. Includes red LED stop/tail, amber LED turn and white LED backup lights.	$1,864
5150-0053	Code 3 65PKG vertical mount tail lights. Includes red LED stop/tail, amber arrow LED turn and white LED back-up lights.	$1,517
5150-0054	Whelen 600 series LED vertical mount taillights. Includes LED stop/tail, turn and backup lights with vertical Cast 4 housing and weatherproof connectors.	$1,757
5150-0056	Whelen 600 series LED vertical mount tail lights. Includes LED stop/tail, arrow turn and back-up lights with vertical Cast 3 housing and weatherproof connectors.	$1,908
5150-0057	Whelen 600 series LED vertical mount tail lights. Includes LED stop/tail, arrow turn and back-up lights with vertical Cast 4 housing and weatherproof connectors.	$2,176
5150-0058	Federal Signal QuadraFlare LED vertical mount tail lights. Includes LED stop/tail, arrow turn and back-up lights with vertical Cast 4 housing and weatherproof connectors.	$1,193
5150-0059	Federal Signal QuadraFlare LED vertical mount tail lights. Includes LED stop/tail, arrow turn and back-up lights with vertical Cast 3 housing and weatherproof connectors.	$1,042
5150-0060	Federal Signal QuadraFlare LED vertical mount tail lights. Includes LED stop/tail, turn and back-up lights with vertical Cast 3 housing and weatherproof connectors.	$1,139
5150-0063	Double chrome trim ring for Weldon 1010 tail lights (PR).	$252
5150-0064	Whelen PSR00XRR series LED red third brake light. Light mounted above recessed traffic advisor.	$303
5150-0066	Marker light LED body/cab package. E-One custom cab and pumper or tanker body only. Model 10 front marker lights mounted on top of cab.	$1,442
5150-0068	Marker lights Britax LED amber/red rubber housed mounted on the rear body corners angled down.	$369
5150-0069	Federal Signal QuadraFlare LED vertical mount taillights. Includes LED stop/tail, arrow turn and backup lights with weatherproof connectors.	$1,213
5150-0071	Light Whelen model PSR00XRR LED (EA) red 3rd brake light. Location: [#LOC].	$179
5150-0072	Marker light LED body/cab package. E-One custom cab and pumper or tanker body only. Includes: Trucklite Model 10 front marker lights mounted on top of cab, Trucklite rear upper body and Whelen lower cab/body marker lights.	$1,872
5150-0073	Marker lights additional red LED Whelen Model 50R00MRR (PR). Location: [#LOC]	$229
5150-0074	Marker lights additional amber LED Whelen Model 50A00MAR (PR). Location: [#LOC]	$229
5150-0075	Whelen 600 series LED vertical mount taillights. Includes LED stop/tail, arrow turn and backup lights with individual chrome flanges and weatherproof connectors.	$2,580
5150-0076	Whelen 700 LED auxiliary chevron turn signal (PR) with 15 degree castings. Location: [#LOC]	$674
5150-0077	Whelen 900 series LED tail lights. Includes LED stop/tail, arrow turn and back-up lights with weatherproof connectors.	$4,654
5150-0078	Truck-Lite model #35720 guards for front LED clearance lights on cab.	$85
5150-0079	Spring mounted plate for rear DOT lighting. Locate centered below rear of body.	$338
5150-0080	Weldon auxiliary turn signal model 9186-8580 LED (PR). Location: [#LOC].	$257
5150-0081	Light Whelen 500 model 5SR00XRR red LED 3rd brake light (ea). Location: [#LOC].	$201
5150-0082	Whelen 600 series LED vertical mount taillights. Includes LED stop/tail, arrow turn in vertical Cast 3 housing with 900 series halogen backup lights down low and weatherproof connectors.	$1,589
5150-0084	Weldon LED vertical mount taillights. Includes LED stop, tail, sequential turn and halogen backup lights with vertical 3 housing and weatherproof connectors.	$1,079
5150-0087	Weldon LED vertical mount taillights. Includes LED stop, tail, sequential turn and halogen backup lights with vertical 4 housing and weatherproof connectors.	$1,079
5150-0091	Whelen M6 series LED vertical mount tail lights. Includes LED stop/tail, arrow turn and back-up lights with vertical 4 light housing and weatherproof connectors.	$1,513
5150-0093	Marker light LED body/cab package. E-One custom cab and stainless steel body only.	$1,223
5150-0098	Truck-Lite auxiliary turn signal model 60117Y LED (PR) with model 60719 stainless steel cover. Location: [#LOC].	$245
5150-0099	LED marker light cab and body package. E-ONE custom cab and SS body vehicles.	$1,223
5150-0100	Marker light LED body package. Commercial chassis with SS body vehicles.	$729
5150-0101	Whelen M9 series LED taillights. Includes LED stop/tail, arrow turn and backup lights with weatherproof connectors.	$3,178
5150-0107	Whelen arrow turn signals, front and rear as applicable, to be set to sequential flash pattern.	$22
5150-0120	Whelen 600 LED auxiliary arrow turn signal (PR) with 15 degree castings. Location: [#LOC].	$615
5150-0121	Trucklite model MDL60 chrome bezels for front cab corner marker/turn lights.	$49
5150-0122	Marker lights addtional red LED Trucklite Model 15 (PR). Location: [#LOC].	$93
5150-0123	Marker lights addtional amber LED Trucklite Model 15 (PR). Location: [#LOC].	$93
5150-0126	Marker light LED cab package. E-One custom cab only.	$701
5150-0127	Whelen M6 series LED vertical mount tail lights. Includes LED stop/tail, arrow turn lights with vertical 3 light housing (PR) with M9LZC Super LED scene lights (PR), with chrome flanges and weatherproof connectors.	$2,375
5150-0130	License plate light LED with chrome housing located at the rear of the body driver side down low.	$123

5150-0133	License plate light LED with chrome housing located at the rear of the body below B1 entry door.	$123
5150-0134	License plate light incandescent with chrome housing located at the rear of the body.	$123
5200-0000	Breaker box 8 place single phase. Includes main breaker. Note: Main breaker occupies 2 places leaving 6 available. Locate [#LOC].	$782
5200-0001	Breaker box 12 place single phase. Includes main breaker. Note: If gen is 6KW or less, main will occupy 2 places leaving 10 available. Locate [#LOC].	$818
5200-0002	Breaker Box 20 Place Single Phase. Includes main breaker. Locate [#LOC].	$833
5200-0003	Breaker box 2 place single phase (70A 110/220V). Location [#LOC].	$348
5200-0007	Breaker box 30 place single phase. Includes main breaker. Maximum generator size 48 KW. Location: [#LOC].	$1,291
5200-0008	Breaker box 16 place single phase. Includes main breaker. Locate [#LOC].	$822
5200-0009	Breaker box 8 place single phase; no main breaker. For use with multiple options wired through shoreline power with 30A or larger inlet recept. Locate adjacent to main breaker box.	$610
5250-0003	Generator Onan 6KW diesel. Requires fuel pick up option in chassis and 3rd party testing. Generator location: [#LOC].	$14,030
5250-0004	Generator Onan 10KW diesel. Requires fuel pick up option in chassis and 3rd party testing. Generator location: [#LOC].	$17,913
5250-0005	Generator Onan 6KW hydraulic. Includes generator control / PTO engage switch and a gauge panel located adjacent to breaker box. Generator location: [#LOC].	$12,000
5250-0006	Generator Onan 8KW hydraulic. Includes generator control/PTO engage switch and a gauge panel located adjacent to circuit breaker box. Generator location: [#LOC].	$13,506
5250-0007	Generator Onan 10KW hydraulic. Includes generator control / PTO engage switch and a gauge panel located adjacent to breaker box. Generator location: [#LOC].	$14,024
5250-0008	Generator Harrison 15KW MPC hydraulic. Includes generator control / PTO engage switch and a gauge panel located adjacent to breaker box. Generator location: [#LOC].	$23,250
5250-0009	Generator Harrison 20KW MPC hydraulic. Includes generator control / PTO engage switch and a gauge panel located adjacent to breaker box. Generator location: [#LOC].	$25,119
5250-0012	Generator Onan 15KW hydraulic. Includes generator control/PTO engage switch and a gauge panel located adjacent to circuit breaker box. Generator location: [#LOC].	$20,255
5250-0013	Generator Onan 20KW hydraulic. Includes generator control / PTO engage switch and a gauge panel located adjacent to breaker box. N/A on units with a water pump due to frequency fluctuations. Generator location: [#LOC].	$33,211
5250-0017	Generator Honda EM5000SXK with 4.5KW continuous output. Generator location: [#LOC].	$5,680
5250-0026	Generator Smart Power 10KW hydraulic model ER110. Includes generator control / PTO engage switch and a gauge panel located adjacent to breaker box. Generator location: [#LOC].	$15,998
5250-0036	Generator Smart Power 6KW hydraulic model HR-6 (with top mount cooler). Includes generator control / PTO engage switch and a gauge panel located adjacent to breaker box. Generator location: [#LOC].	$12,741
5250-0037	Generator Smart Power 8KW hydraulic model HR-8 (with top mount cooler). Includes generator control/PTO engagement switch and a gauge panel located adjacent to the circuit breaker box. Generator location: [#LOC].	$14,560
5250-0038	Generator Smart Power 10KW hydraulic model HR-110 (with top mount cooler). Includes generator control / PTO engage switch and a gauge panel located adjacent to breaker box. Generator location: [#LOC].	$15,998
5250-0039	Generator Harrison 10KW MCR hydraulic. Includes generator control/PTO engage switch and a gauge panel located adjacent to breaker box. Generator location: [#LOC].	$15,138
5250-0040	Generator Harrison 6KW MCR hydraulic. Includes generator control / PTO engage switch and a gauge panel located adjacent to breaker box. Generator location: [#LOC].	$11,790
5250-0043	Dealer installed generator. Option includes space only. Dealer responsible for NFPA required 3rd party generator testing.	$275
5250-0045	Generator Harrison 30KW MPC hydraulic. Includes generator control / PTO engage switch and a gauge panel located adjacent to breaker box. Generator location: [#LOC].	$30,788
5250-0047	Generator Smart Power 15KW hydraulic model HR-15 (with top mount cooler). Includes generator control / PTO engage switch and a gauge panel located adjacent to breaker box. Generator location: [#LOC].	$21,282
5250-0050	Generator Smart Power 20KW hydraulic model HR-20 (with top mount cooler). Includes generator control / PTO engage switch and a gauge panel located adjacent to breaker box. Generator location: [#LOC].	$23,398
5250-0051	Locate generator gauge panel on pump operators panel ipo next to breaker box.	$111
5250-0054	Generator Onan 7.5KW diesel. Requires fuel pick up option in chassis and 3rd party testing. Generator location: [#LOC].	$12,574
5250-0055	Generator Smart Power 8KW hydraulic model ER8. Includes generator control / PTO engage switch and a gauge panel located adjacent to breaker box. Generator location: [#LOC]	$17,241
5250-0056	PTO engage switch to be wired as follows: switch in the down position (PTO off) and switch in the up position (PTO engage).	$106
5250-0060	Dealer installed Onan 6KW diesel generator located [#LOC]. Option includes space only. Dealer responsible for NFPA required 3rd party generator testing.	$275

5250-0061	Dealer installed Onan 6KW hydraulic generator located [#LOC]. Option includes space only. Dealer responsible for NFPA required 3rd party generator testing.	$275
5250-0062	Dealer installed Onan 8KW hydraulic generator located [#LOC]. Option includes space only. Dealer responsible for NFPA required 3rd party generator testing.	$275
5250-0063	Dealer installed Onan 10KW hydraulic generator located [#LOC]. Option includes space only. Dealer responsible for NFPA required 3rd party generator testing.	$275
5250-0064	Dealer installed Onan 15KW hydraulic generator located [#LOC]. Option includes space only. Dealer responsible for NFPA required 3rd party generator testing.	$275
5250-0065	Dealer installed Onan 20KW hydraulic generator located [#LOC]. Option includes space only. Dealer responsible for NFPA required 3rd party generator testing.	$275
5250-0066	Dealer installed Smart Power 10KW hydraulic model ER110 generator located [#LOC]. Option includes space only. Dealer responsible for NFPA required 3rd party generator testing.	$275
5250-0067	Dealer installed Smart Power 10KW hydraulic model HR110 generator located [#LOC]. Option includes space only. Dealer responsible for NFPA required 3rd party generator testing.	$275
5250-0068	Dealer installed Smart Power 6KW hydraulic model HR-6 (with top mount cooler) generator located [#LOC]. Option includes space only. Dealer responsible for NFPA required 3rd party generator testing.	$275
5250-0069	Dealer installed Smart Power 8KW hydraulic model HR-8 (with top mount cooler) generator located [#LOC]. Option includes space only. Dealer responsible for NFPA required 3rd party generator testing.	$275
5250-0070	Dealer installed Smart Power 15KW hydraulic model HR-15 (with top mount cooler) generator located [#LOC]. Option includes space only. Dealer responsible for NFPA required 3rd party generator testing.	$275
5250-0071	Dealer installed Smart Power 20KW hydraulic model HR-20 (with top mount cooler) generator located [#LOC]. Option includes space only. Dealer responsible for NFPA required 3rd party generator testing.	$275
5250-0072	Dealer installed Harrison 6KW MCR hydraulic generator located [#LOC]. Option includes space only. Dealer responsible for NFPA required 3rd party generator testing.	$275
5250-0073	Dealer installed Harrison 10KW MCR hydraulic generator located [#LOC]. Option includes space only. Dealer responsible for NFPA required 3rd party generator testing.	$275
5250-0074	Dealer installed Harrison 30KW MPC hydraulic generator located [#LOC]. Option includes space only. Dealer responsible for NFPA required 3rd party generator testing.	$275
5250-0075	Guarded generator PTO engage toggle switch. Located driver side cab switch panel. For use on Typhoon X and CIIX cabs only.	$180
5250-0076	Guarded PTO engage rocker switch. Located driver side cab switch panel. For use on Quest, CIIX LTH aerial and commercial cabs.	$180
5250-0077	Generator Harrison 8KW MCR hydraulic. Includes generator control / PTO engage switch and a gauge panel located adjacent to breaker box. Generator location: [#LOC].	$14,972
5250-0078	Generator Smart Power 10KW hydraulic Liberator model Li15 (with top mount cooler and XRT hyd tool pump). Includes generator control / PTO engage switch and a gauge panel located adjacent to breaker box. Generator location: [#LOC].	$24,727
5250-0080	Dealer installed 5KW gas generator located [#LOC]. Option includes space only. Dealer responsible for NFPA required 3rd party generator testing.	$275
5250-0082	Dealer installed Westerbeke 10KW diesel generator located [#LOC]. Option includes space only. Dealer responsible for NFPA required 3rd party generator testing.	$275
5250-0092	Generator Honda EM5000SXK with 4.5KW continuous output. NFPA rated at 3.3KW. Generator location: [#LOC].	$5,146
5250-0093	Generator Smart Power 20KW hydraulic model HR-20 (with top mount cooler). Includes generator control / PTO engage switch and a gauge panel located on pump panel. Generator location: [#LOC]	$23,398
5250-0094	Harrison gas powered 5.5KW generator. Includes alternator duct and attached fuel tank. Locate in compartment [#LOC].	$3,905
5250-0095	Harrison gas powered generator. Includes remote start at pump operator panel, alternator duct and attached fuel tank. Locate in: [#LOC].	$4,301
5250-0106	Westerbeke 10KW BTDAR diesel single phase generator and XRT Hydraulic tool system with 3 tool capability. 10,500 PSI system. Includes selector valve for each reel, hyd res / filter and remote cooler. Requires fuel pick up option in chassis and 3rd party testing. Locate in dunnage pan offset to officer side. Route (4) lead lines to B1 compt.	$42,989
5250-0111	Westerbeke 10KW BTDAR diesel single phase generator and XRT Hydraulic tool system with 2 tool capability. 10,500 PSI system. Includes selector valve for each reel, hyd res / filter. Requires fuel pick up option in chassis and 3rd party testing. Locate in [#LOC]. Route (4) lead lines to B1 compt.	$42,989
5250-0115	Generator Harrison 15KW MPC hydraulic w/IHT. Includes tool circuit manifold, aux heat exchanger, generator control / PTO engage switch and a gauge panel located adjacent to breaker box. [#LOC]	$31,206
5250-0116	Dealer installed Powertech 8KW diesel generator located [#LOC]. Option includes space only. Dealer responsible for NFPA required 3rd party generator testing.	$275
5250-0117	Generator Harrison 8KW MAS hydraulic. Includes generator control/PTO engage switch and a gauge panel located adjacent to breaker box. Generator location: [#LOC].	$14,972

5250-0118	Generator Harrison 8KW LPG hydraulic. Includes generator control switch to engage the PTO and start the generator and a gauge panel located adjacent to breaker box. Generator location: [#LOC].	$14,692
5250-0123	Generator Honda EM4000 with 3.5KW continuous output. NFPA rated at 3.3KW. Generator location: [#LOC].	$5,146
5250-0124	Generator Smart Power 6KW hydraulic model LR-6 Light Rescue Series (FORD 250, 350, 450, 550 Chassis). Includes generator control / PTO engage switch and a gauge panel located adjacent to breaker box. Generator location:[#LOC].	$13,480
5250-0125	Generator Harrison 10KW LPG hydraulic. Includes generator control/PTO engage switch and a gauge panel located adjacent to breaker box. Generator location: [#LOC].	$15,138
5250-0128	Generator Smart Power 15KW hydraulic Liberator model Li20 (with top mount cooler and XRT hyd tool pump). Includes generator control switch and a gauge panel located adjacent to breaker box. Generator location: [#LOC].	$28,859
5250-0129	Generator Harrison 8KW MDS hydraulic. Includes generator control/PTO engage switch, gauge panel located adjacent to breaker box and 80cc hyd pump (requires driver side port on EVS3000 trans). Generator location: [#LOC].	$18,692
5250-0130	Generator Harrison 6KW MDS hydraulic w/IHT for continuous accessory. Includes aux hyd system manifold, integral aux heat exchanger, generator control / PTO switch, aux system / PTO switch, (both switches accessible by driver) and a generator gauge panel located adjacent to breaker box. Generator location: [#LOC].	$23,508
5250-0131	Generator toggle switch (IPOS keyed switch). Located: [#LOC].	$180
5250-0132	Generator Harrison 8KW MDS hydraulic w/IHT for continuous accessory. Includes aux hyd system manifold, integral aux heat exchanger, generator control / PTO switch, aux system / PTO switch (both switches accessible by driver), and a generator gauge panel located adjacent to breaker box. Generator location: [#LOC].	$25,290
5250-0133	Generator Harrison 10KW MDS hydraulic w/IHT for continuous accessory. Includes aux hyd system manifold, integral aux heat exchanger, generator control / PTO switch, aux system / PTO switch (both switches accessible by driver), and a generator gauge panel located adjacent to breaker box. Generator location: [#LOC].	$26,286
5250-0134	Generator Harrison 6KW LPG hydraulic with remote mounted reservoir. Includes generator control / PTO engage switch and a gauge panel located adjacent to breaker box. Generator location: [#LOC].	$15,467
5250-0135	Generator Harrison 10KW MCR hydraulic w/IHT for continuous accessory. Includes aux hyd system manifold, aux heat exchanger, generator control / PTO switch, aux system / PTO switch, (both switches accessible by driver) and a generator gauge panel located adjacent to breaker box. Generator location: [#LOC].	$23,783
5255-0001	3rd party generator test with pump.	$83
5260-0000	Generator air deflector for Onan hydraulic. When generator is compartment mounted or mounted in a pan on an aerial body, engineering is to specify updraft or downdraft.	$409
5260-0001	Remote start for diesel generator. Location: [#LOC].	$385
5260-0002	Remote control starting kit for Honda EM3800SX, EM4000, EM5000SX and EM6500SX generators. Locate [#LOC].	$666
5260-0004	Generator prewire for dealer supplied and installed 5 KW portable generator. Includes 12 volt wiring and cable between breaker box. Prewire to [#LOC].	$250
5260-0006	Compartment door(s) of compartment mounted generator to have interlock.	$186
5260-0008	Generator prewire for dealer supplied and installed 6.5KW portable generator. Includes 12volt wiring and cable between breaker box. Prewire to [#LOC].	$306
5260-0009	Generator oil drain valve with tube extending below driver side pump panel.	$195
5260-0010	Remote start switches for Honda EM3800SX portable generator. Honda remote start kit with E-ONE supplied switches on pump panel. This option may void factory generator warranty from Honda.	$937
5260-0011	Extend exhaust pipe from dunnage pan mounted portable generator into pump compartment using stainless steel flexible pipe.	$87
5260-0013	Locate generator gauge panel to the outboard side of the breaker box.	$111
5260-0014	Oil drain valve with tube extending below officer side pump panel.	$195
5260-0015	Generator prewire for dealer supplied and installed 2.5 KW portable generator. Includes 12volt wiring and cable between breaker box with #66W47 posi-lock Woodhead recpt. Prewire to R1 forward wall up high.	$413
5260-0016	Extend exhaust pipe from dunnage pan mounted portable generator in line with main exhaust system using stainless steel flexible pipe.	$87
5260-0017	Compartment door(s) of compartment mounted compressor to have interlock.	$186
5260-0019	The exhaust of the gas generator to be routed downward and to the exit to below the unit to the officer side of the unit.	$248
5260-0020	Compartment door(s) of compartment mounted electric dump valve to have interlock.	$186
5260-0021	Oil drain valve with tube extending below driver side pump panel.	$195
5260-0023	Generator platform to raise the generator up 8" in the storage pan. Generator raised due to heat from generator exhaust.	$369
5260-0024	Locate generator gauge panel on the pump operators panel in lieu of standard location adjacent to breaker box.	$111
5260-0025	Generator prewire for dealer supplied and installed 3.5 KW portable generator (Honda or other with equivalent dimensions). Includes 12 volt wiring and A/C cabling to breaker box. Prewire to [#LOC].	$250

5260-0027	Locate generator gauge panel above breaker box on a formed bracket. See photos on file with sales.	$111
5260-0032	Bolt-on diamond plate cover on top of generator. See photos on file.	$242
5260-0033	Diamond plate guard to protect the generator's wiring and harnesses in the dunnage pan. The guard will go full height of the dunnage pan, forward to rear, separating the generator and breaker box from the other side (driver's side) of the dunnage pan.	$310
5260-0034	Veritcal exhaust for Harrison MCR and MPC generators 6KW - 20KW.	$474
5300-0000	Light bar Code 3 model XL5100 (PR) 22" Long. All red lens. Location: [#LOC]	$1,139
5300-0003	Light bar Code 3 model 556A3 56" long with all red lenses. Location: Centered on the front cab roof	$1,568
5300-0004	Light bar Code 3 model 718A1 (PR) 18" Long. Red Upper / Clear Lower lens. Location: [#LOC].	$1,284
5300-0011	Light bar Federal Signal ViewPoint. Two (2) 20" light bars LED 3 pod. Lenses shall be all red. Location: [#LOC]	$2,424
5300-0012	Light bar Federal Signal ViewPoint. Two (2) 20" light bars LED 3 pod. Lenses shall be Red/White/Red - Red/White/Red. Location: [#LOC].	$2,687
5300-0013	Light bar Federal Signal ViewPoint. Two (2) 26.5" 4 pod LED light bars. Lenses to be all red. Location: [#LOC].	$2,875
5300-0014	Light bar Federal Signal ViewPoint. Two (2) 26.5" 4 pod LED light bars. Lenses to be R/R/W/R R/W/R/R. Location: [#LOC].	$3,200
5300-0015	Light bars Federal Signal ADX2201 LED (PR) with red lenses. Location: [#LOC].	$2,841
5300-0017	Light bar Federal Signal Jet Stream 48" LED with R/W/R lenses, red diodes and single traffic clearing light. Location: Centered on the front cab roof	$2,329
5300-0020	Light bar Federal Signal JetStream JLX54HH-00011 54" LED. Red Solaris reflectors with red domes each side and (2) center clear TCL lights. Location: Centered on the front cab roof.	$2,591
5300-0021	Light bar Federal Signal JetSolaris 60" LED. Red Solaris reflectors with clear domes. NFPA compliant. Does not require 2 addl side facing bars. Location: Centered on the front cab roof.	$2,463
5300-0023	Light bars Federal Signal 22I (PR). Location: [#LOC].	$1,028
5300-0024	Light bar Federal Signal Aerodynic 25RQL-Fast 52" with red/clear lens. Location: Centered on the front cab roof.	$1,428
5300-0026	Light bar Federal Signal Aerodynic ADL5202 52" with red/clear/red lens. Location: Centered on the front cab roof.	$1,350
5300-0028	Light bar Federal Signal Aerodynic ADX5271 52" with 10 red Solaris LED reflectors. Location: Centered on the front cab roof	$2,735
5300-0029	Light bar Federal Signal AeroDynic ADX7201 72" with 8 red Solaris LED reflectors. Location: Centered on the front cab roof.	$2,865
5300-0030	Light bar Federal Signal Aerodynic AH1LC 72" with red/clear lens. Location: Centered on the front cab roof.	$1,721
5300-0031	Light bar Federal Signal Aerodynic AH2LC 72" with red/clear lens. Location: Centered on the front cab roof	$1,790
5300-0035	Light bar Federal Signal Viewpoint. Two (2) 20" 3 pod light bars. Location: [#LOC]	$1,397
5300-0036	Light bar Federal Signal Viewpoint. Two (2) 26.5" 4-pod light bars. Location: [#LOC]	$1,747
5300-0044	Light bar Federal Signal Vector VC6001. Location: Centered on the front cab roof	$2,019
5300-0047	Light bar Whelen model 9M380NQ66 w/MKEZ7 mounts. Location: Centered on the front cab roof.	$2,603
5300-0048	Light bar Whelen Centurion model C300700N 72". Location: Centered on the front cab roof	$1,589
5300-0049	Light bar Whelen Edge model 9M380NV 66" with MKEZ7 mounts. Location: Centered on the front cab roof	$2,978
5300-0050	Light bar Whelen Edge model 9M387NQ 72" with MKEZ7 mounts without rear facing strobes. N/A on INTL Chassis. Location: Centered on the front cab roof	$2,738
5300-0051	Light bar Whelen model 9M387NV 72" all strobe with MKEZ7 mounts. N/A with Vista roof with front facing windows. N/A on INTL Chassis. Location: Centered on the front cab roof	$2,738
5300-0053	Light bar Whelen Freedom model FN66QLED 66" with MKEZ7 mounts. All LED light bar without rear facing LEDs. Location: Centered on the front cab roof.	$3,527
5300-0055	Light bar Whelen Freedom model FN72QLED 72" LED with MKEZ7 mounts and clear lenses. Location: Centered on the front cab roof.	$3,617
5300-0056	Light bar Whelen Freedom model FN72VLED 72" LED with MKEZ7 mounts. N/A INTL Chassis or Vista roofs with front facing windows. Location: Centered on the front cab roof.	$3,617
5300-0059	Light bar Whelen model 9MINNFPA 28 1/4" strobe with MKEZ7 mounts (PR). Location: [#LOC]	$2,773
5300-0060	Light bar Code 3 model 574NFPA1 74" with all red lenses. Location: Centered on the front cab roof.	$1,813
5300-0065	Light bar Federal Signal ADX2202 LED (PR) with red lenses. Located side facing only. Not NFPA compliant forward facing. Location: [#LOC].	$1,761
5300-0070	Light bar Federal Signal JetStream JLX5401 LED 54". Red Solaris reflectors with red domes. Location: Centered on the front cab roof	$2,108
5300-0074	Whelen Mini-Freedom LED light bars (PR) model FNMINI 24" with low profile MK9 mounts. Location: [#LOC].	$4,091
5300-0082	Whelen Mini-Freedom LED side facing light bars (PR) model FT8RRRRF 24" with MKEZ7 mounts. Location: [#LOC]. Lens color: Clear.	$3,919
5300-0084	Whelen Mini-Freedom LED light bars (PR) model FNMINI 24" with red/clear lenses and MKEZ7 mounts. Location: [#LOC].	$4,091
5300-0085	Federal Vector SL LED Lightbar Model 545NFPA60L2 60". Includes (12) six LED red Solaris reflectors and (4) six LED white Solaris LED reflectors.	$3,625

5300-0086	Light bar Code 3 MX model 758A1. Upper deck contains (4) rotators (2 ea side) with red lenses and (2) clear oscilasers. Lower deck contains (2) frt red halogen flashers outboard, intersection sweeps and clear lenses. Loc: Centered on the frt cab roof.	$1,749
5300-0087	Light bar Code 3 model XL5100 22" Long. All red lens. Location: Centered on the front cab roof.	$572
5300-0088	Light bar Whelen Freedom model FN55VLED 55" LED with MKEZ7 mounts. N/A with Vista roofs with front facing windows. Location: Centered on the front cab roof.	$3,195
5300-0089	Light bar Code 3 MX model 769A1. Upper deck contains 9 rotators w/ red lenses. Lower deck contains intersection sweeps w/clear lenses. Location: Centered on the front cab roof.	$1,811
5300-0091	Light bar Code 3 Excalibur model X58A. Upper deck contains (4) rotators (two ea side) with red lenses and (2) white oscilasers with clear lenses. Lower deck contains (4) takedown lights and two alley lights. Location: Centered on the front cab roof.	$1,987
5300-0092	Light bar Whelen Freedom model FN55QLED 55" LED with takedown lights and MKEZ7 mounts. Location: Centered on the front cab roof.	$3,462
5300-0093	Light bar Whelen Freedom model FN72VLED 72" LED with Opticom and MKEZ7 mounts. N/A INTL Chassis or Vista roofs with front facing windows. Location: Centered on the front cab roof.	$6,054
5300-0094	Light bar Federal Signal 22I (ADL2201Y) with 175 FPM rotators (PR). Location: [#LOC]	$1,028
5300-0095	Light bar Code 3 MX model 769 with R/C/C/C/B lenses. Upper deck contains 9 rotators. Lower deck contains intersection sweeps w/clear lenses. Location: Centered on the front cab roof.	$1,811
5300-0096	Light bar Code 3 Javelin LED model JX67A. Location: Centered on the front cab roof.	$6,084
5300-0097	Light bars Federal Signal Vector/ViewPoint. One (1) center 21" 3 pod and two (2) side 26.5" 4 pod LED light bars. Lenses to be R/R/W/R R/R/R R/W/R/R. Location: "V" centered on the front cab roof.	$4,110
5300-0098	Light bar Federal Signal Vector VC4801. Location: Centered on the front cab roof.	$1,712
5300-0099	Light bar Federal Signal JLX21 LED (PR). Located side facing only. Location: [#LOC].	$1,726
5300-0100	Light bar Whelen Freedom model FN72QLED 72" LED with clear lenses and MKEZ7 mounts. Includes (8) red LED and (2) white LED. N/A INTL Chassis. Location: Centered on the front cab roof.	$4,020
5300-0101	Light bar Federal Signal Aerodynic ADL5202 52" with blue lenses. Location: Centered on the front cab roof.	$1,350
5300-0102	Whelen Mini-Freedom LED side facing light bars (PR) model FT8RCRCF 24" with MKEZ7 mounts. Location: [#LOC]. Lense colors: Clear.	$3,889
5300-0105	Light bar Code 3 model 718A1 (PR) 18" Long. Red upper/clear lower lens driver side and blue upper/clear lower officer side. Location: [#LOC]	$1,111
5300-0106	Light bar Code 3 MX model 769 with B/B/C/R/R upper lenses clear lower lenses. Upper deck contains (8) rotators; (4) each side and alley lights. Lower deck contains intersection sweeps, (4) LED warning; (2) blue driver and (2) red officer. Includes pre-wire for opticom in the center of the upper deck. Location: Centered on the front cab roof. Requires 5300-0105.	$3,252
5300-0107	Light bar Code 3 MX7400-ALRC-777 58" long. Location: Centered on the front cab roof. Includes (1) steady burn red light for California DOT.	$4,708
5300-0108	Light bar Code 3 model MX7100-ALRC-724 (PR) 18" Long. Location: At angle behind main light bar with front corners of bars even with outside edge of main bar.	$1,141
5300-0110	Light bar Whelen Freedom model FN72QLED 72" LED with MK8H high mounts. Includes (12) red LED and (2) white LED. N/A INTL Chassis. Location: Centered on the front cab roof.	$5,080
5300-0111	Whelen Mini-Freedom LED side facing light bars (PR) model FT8RRRRF 24" with MK8H high mounts. Location: [#LOC]. Lens colors: Clear.	$4,102
5300-0113	Light bar Whelen Freedom model FL2RRRRF 72" LED with MKEZ7 mounts. Includes (10) red LEDs and (4) blue LEDs. N/A INTL Chassis. Location: Centered on the front cab roof.	$4,826
5300-0114	Light bars Federal Signal Vector/ViewPoint. One (1) center 21" 3 pod and two (2) side 26.5" 4 pod light bars. Lenses to be R/R/W/R-R/W/R-R/W/R/R. Location: "V" centered on the front cab roof.	$2,645
5300-0117	Light bar Code 3 model 729A (PR) 29" long. Red upper / clear lower lens. Location: [#LOC]	$3,258
5300-0118	Light bar Code 3 MX model 769A with R/W/W/W/R upper lenses and clear lower lenses. Upper deck contains (6) rotators and 3-M Opticom. Lower deck contains intersection sweeps, (6) red LED warning and (4) white LED warning. Location: Centered on the front cab roof.	$6,746
5300-0121	Light bars Federal Signal Vector/ViewPoint. One (1) center 21'' 3 pod with 3M 792 Opticom and two (2) side 26.5'' 4 pod light bars. Lenses to be R/R/W/R-W/W/W-R/W/R/R. Location: ''V'' centered on the front cab roof.	$4,798
5300-0124	Light bar Federal Signal ViewPoint. Two (2) 26.5" 4 pod LED light bars configured for use w/vista roof that has front windows. Lenses to be R/R/W/R R/W/R/R. Location: [#LOC]	$3,016
5300-0125	Light bar Whelen Freedom model FN82QLED 82" LED with MKEZ7 mounts and clear lenses. Includes (12) red, (2) white LEDs and pre-wire for Opticom. N/A commercial Chassis. Location: Centered on the front cab roof	$4,671
5300-0126	Light bar Whelen Freedom model FN72VLED 72" LED with 795H Opticom, (12) red LEDs, (2) clear LEDs and MKEZ7 mounts. N/A INTL Chassis or Vista roofs with front facing windows. Location: Centered on the front cab roof.	$7,407
5300-0128	Federal ADX7250 LED Light bar 72". Includes (12) Solaris 6-LED red reflectors, (4) Solaris 9-LED red reflectors, and (12) Solaris 6-LED white reflectors. Includes (2) flashers, (1) for red LEDs and (1) for white LEDs.	$4,484
5300-0129	Light bar Federal Signal ADX2205 LED (PR). Location: [#LOC]	$4,891
5300-0130	Light bar Whelen Freedom model FN82VLED 82" LED with 3M Opticom and MKEZ7 mounts. N/A INTL Chassis or Vista roofs with front facing windows. Location: Centered on the front cab roof	$5,782

5300-0131	Light bar Whelen model FFX2068 19" LED. Location: Centered front of cab below windshield	$1,551
5300-0132	Light bar Federal Signal ViewPoint. Two (2) 26.5" 4 pod LED light bars. Lenses to be R/R/W/R R/W/G/R. Location: [#LOC]	$3,348
5300-0137	Light bar Whelen Freedom model FN72VLED 72" LED with Opticom and MKEZ7 mounts. Includes (10) red LED and (2) white LED. N/A INTL Chassis. Location: Centered on the front cab roof.	$6,862
5300-0138	Light bar package, Federal Signal Escape LED (5) bar package. Includes: (1) 40'' LED front bar w/ Opticom, (2) diagonal 26'' LED bars and (2) 28'' side LED bars.	$10,758
5300-0139	Light bars Federal Signal Vector/ViewPoint. One (1) center 21" 3 pod and two (2) side 26.5" 4 pod LED light bars configured for use w/vista roof that has front windows. Lenses to be R/R/W/R R/R/R R/W/R/R. Location: "V" centered on the front cab roof.	$3,928
5300-0140	Light bar Whelen Freedom model FN72QLED 72" LED with MK8 high mounts. Includes (10) red LED and (4) white LED. N/A INTL Chassis. Location: Centered on the front cab roof.	$5,084
5300-0142	Light bar Federal Signal JetStream 60" LED. Red/White Solaris reflectors with clear domes. NFPA Compliant, does not require 2 addl side facing bars. Location: Centered on the front cab roof.	$2,609
5300-0143	Mounting brackets for Federal Signal Vector or Viewpoint lightbars. Height from top of cab to bottom of lightbar to be approx. 4".	$141
5300-0144	Light bar Whelen Edge model 9M387NQ 72" with MKEZ7 mounts, pre-wire for Opticom and without rear facing strobes. N/A on INTL Chassis. Location: Centered on the front cab roof	$2,993
5300-0145	Federal ADX7204 LED Lightbar 72". Includes (12) Solaris 9-LED red reflectors and Opticom. Location: Centered on the front cab roof.	$5,432
5300-0148	Light bar Whelen model 9MMEDFFD 28 1/4" strobe with MK9 mounts (PR). Lense colors to be RRCR (front to rear). Location: [#LOC]	$2,541
5300-0149	Light bar Federal Signal ViewPoint with 3M Opticom. Two (2) 26.5" 4 pod LED light bars model 535NFPA8P20. Lenses to be Red\Blue\Red\White Opticom\Red\Blue\Red. Location: [#LOC]	$5,134
5300-0150	Light bar Federal Signal ViewPoint. Two (2) 26.5" 4 pod LED light bars. Lenses to be R/B/R/B B/R/B/R. Location: [#LOC]	$2,875
5300-0151	Light bar Whelen Freedom model FN66VLED 66" with MKEZ7 mounts. All LED light bar. Location: Centered on the front cab roof	$3,527
5300-0154	Light bar Federal Signal JetStream 60'' LED. Red Solaris reflectors and red domes with clear center and 3M 792 Opticom. NFPA Compliant, does not require 2 addl side facing bars. Location: Centered on the front cab roof	$6,307
5300-0155	Federal ADX5283 LED Lightbar 52" with clear domes. Includes (16) Solaris 6-LED red reflectors, (4) Solaris 6-LED white reflectors, TCL and Opticom. Includes (2) flashers, (1) for red LEDs and (1) for white LEDs.	$5,839
5300-0156	Light bar Federal Signal AeroDynic ADX7202 72" with (6) red and (2) white Solaris LED reflectors. Location: Centered on the front cab roof.	$3,017
5300-0157	Whelen Mini-Freedom LED light bars (PR) model FNMINI 24" with clear lenses and MKEZ7 mounts. Location: [#LOC].	$4,091
5300-0158	Light bar Whelen Freedom model FN72QLED 72" LED with 3M Opticom, clear lenses and MKEZ7 mounts. N/A INTL Chassis. Location: Centered on the front cab roof.	$5,850
5300-0159	Light bar Federal Signal ADX7202 72" with (6) red, (2) white Solaris LED reflectors and 3M Opticom. Location: Centered on the front cab roof	$4,943
5300-0160	Light bar Federal Signal JetSolaris 60" LED. Red Solaris reflectors with center traffic clearing light. NFPA compliant, does not require 2 addl side facing bars. Location: Centered on the front cab roof.	$2,538
5300-0161	Light bar Whelen Freedom model FN72VLED 72" LED with Opticom and MKEZ7 mounts. Includes (10) red LED, (2) white LED and (2) green LED. N/A INTL Chassis. Location: Centered on the front cab roof.	$7,609
5300-0162	Whelen Mini-Freedom LED side facing light bars (PR) model FT8RARRF driver and FT8RRARF officer 24" with MKEZ7 mounts. Location: [#LOC]. Lense colors: Clear.	$3,919
5300-0163	Light bar Whelen Freedom model FN72VLED 72" LED with offset Opticom and MKEZ7 mounts. N/A INTL Chassis or Vista roofs with front facing windows. Location: Centered on the front cab roof.	$6,054
5300-0164	Light bar package, Federal Signal Escape LED (5) bar package. Includes: (1) 40'' LED front bar (RRWRR), (2) diagonal 26'' LED bars (RWR) and (2) 28'' side LED bars (RRR).	$8,286
5300-0166	Light bar Whelen Freedom model FN60VLED 60" LED with MKEZ7 mounts. N/A on Vista roofs with front facing windows. Location: Centered on the front cab roof	$4,540
5300-0167	Whelen Mini-Freedom LED side facing light bars (PR) model FT8RRRRF 28.25" with MKEZ7 mounts. Location: [#LOC]. Lense colors: Clear.	$4,949
5300-0168	Whelen Mini-Freedom LED side facing light bars (PR) model FT8RRRRF 24" with MKEZ7 mounts. Location: [#LOC]. Lense colors: Red.	$3,919
5300-0169	Light bar Whelen Freedom model FN72QLED 72" LED with red lenses and MKEZ7 mounts. Includes (8) red LED and (2) white LED. N/A INTL Chassis. Location: Centered on the front cab roof.	$4,020
5300-0170	Light bar Federal Signal ViewPoint. Two (2) 26.5" 4 pod LED light bars. Lenses to be R/Opticom/W/R R/W/G/R. Location: Front cab corners	$5,500
5300-0171	Light bar Federal Signal Aerodynic ADL5202 52" with driver red and officer blue lenses. Location: Centered on the front cab roof.	$1,350
5300-0173	Light bar Whelen Freedom model FN72VLED 72" LED with MK8 high mounts. Includes (12) red LED, (2) amber LED and (4) white LED. N/A INTL Chassis or Vista roofs with front facing windows. Location: Centered on the front cab roof.	$5,866

5300-0174	Light bar Whelen Freedom model FN82VLED 82" LED with MKEZ7 mounts and red lenses. Includes (1) driver forward facing steady burn to meet California law. N/A INTL Chassis or Vista roofs with front facing windows. Location: Centered on the front cab roof	$4,271
5300-0176	Light bar Whelen Freedom model FN72QLED 72" LED with MK8 high mounts. N/A INTL Chassis. Location: Centered on the front cab roof.	$3,617
5300-0177	Light bars Federal Signal Vector/ViewPoint. One (1) center 21'' 3 pod with 3M 792 Opticom and two (2) side 26.5'' 4 pod light bars configured for use w/vista roof that has front windows. Lenses to be R/R/W/R-R/Opticom/R-R/W/G/R. Location: ''V'' centered on the front cab roof.	$6,412
5300-0178	Light bar Federal Signal ViewPoint. Two (2) 20" light bars LED 3 pod. Lenses shall be blue/red/blue. Side facing only. Location: [#LOC].	$2,424
5300-0179	Light bar Federal Signal JLX21 LED red/blue(PR). Locate blue forward if side facing. Location: [#LOC]	$2,232
5300-0184	Whelen Mini-Freedom LED side facing light bars (PR) model FT8RCCRF 28.25" with R/C/C/R lenses and MKEZ7 mounts. Location: [#LOC]	$3,889
5300-0185	Light bar Whelen Freedom model FN72QLED 72" LED with clear lenses, MKEZ7 mounts and pre-wire for 3M opticom. Includes (8) red LED and (2) white LED. N/A INTL Chassis. Location: Centered on the front cab roof	$4,093
5300-0187	Light bar Whelen Freedom model FN72QLED 72" LED with clear lenses and MKH8 high mounts. Includes (8) red LED and (2) white LED. N/A INTL Chassis. Location: Centered on the front cab roof	$4,060
5300-0188	Light bar Whelen Freedom model FN72VLED 72" LED with Opticom and MK8 high mounts. N/A INTL Chassis or Vista roofs with front facing windows. Location: Centered on the front cab roof.	$6,096
5300-0190	Light bar Whelen Freedom model FN72QLED 72" LED with Opticom and MK8 high mounts. Includes (6) red LED, (4) Blue LED and (2) white LED. N/A INTL Chassis. Location: Centered on the front cab roof.	$6,874
5300-0191	Install customer purchased E-ONE overstock lightbar. P/N: 681939. Includes disable of rear corner facing LED lights.	$308
5300-0192	Light bar Code 3 Model XP9588NFPA1 88" LED. All red with clear lenses. Not available on commercial cabs. Location: Centered on the front cab roof.	$4,479
5300-0193	Code3 model XP9501NFPA1 (PR) red LED with clear domes. Location: [#LOC].	$1,903
5300-0195	Light bar Federal Signal JetStream 60" LED. Red driver/Blue officer Solaris reflectors. Location: Centered on the front cab roof	$2,160
5300-0197	Light bar Whelen Freedom model FN72QLED 72" LED with GTT Opticom, red lenses and MKH8 high mounts. N/A INTL Chassis. Location: Centered on the front cab roof.	$5,897
5300-0198	Light bar Federal Signal ADX2215-SMV LED side facing (PR) with driver blue forward/red rearward and officer red forward/blue rearward facing lenses. Location: [#LOC].	$4,008
5300-0199	Light bar Whelen Freedom model FL2RRRR 72" LED with Opticom and MKEZ7 mounts. Includes (12) red LED. N/A INTL Chassis. Location: Centered on the front cab roof.	$6,838
5300-0200	Light bar Federal Signal AeroDynic ADX72RB 72" with (16) red and (16) blue Solaris LED reflectors. Lens and LED colors to be B/B/R/R/R/R/B/B/R/R/R/R/B/B. Location: Centered on the front cab roof.	$5,036
5300-0201	Light bar Federal Signal AeroDynic ADX22RB LED (PR) 22" with (4) red and (4) blue Solaris LED reflectors. Lens and LED colors to be B/R/R/B. Located side facing only. Not NFPA compliant forward facing. Location: [#LOC].	$3,060
5300-0202	Light bar Weldon Aero Maxx II 59" LED. NFPA Compliant, does not require 2 addl side facing bars. Location: Centered on the front cab roof	$2,807
5300-0203	Light bar Whelen Freedom model FN72QLED 72" LED with 3M 795H Opticom, (10) red LEDs, (2) clear LEDs and MK8 high mounts. For use with front vista windows. Location: Centered on the front cab roof.	$6,839
5300-0204	Federal ADX7262 LED Lightbar 72" with clear lenses. Includes (12) Solaris 6-LED red reflectors, (8) Solaris 6-LED blue reflectors, (4) Solaris 9-LED red reflectors, and a 3M Opticom. Includes (2) flashers, (1) for red LEDs and (1) for blue LEDs.	$5,463
5300-0205	Whelen Mini-Freedom LED side facing light bars (PR) model FT8CRRCF 28.25" with CRRC lenses and MKEZ7 mounts. Location: [#LOC].	$3,889
5300-0206	Light bar package, Whelen 4500 LED (5) bar package. Includes: (1) 40'' LED front bar w/ Opticom, (2) diagonal 24'' LED bars and (2) 28'' side LED bars.	$12,127
5300-0207	Federal ADX7250 LED Lightbar 72". Includes (12) Solaris 6-LED red reflectors, (4) Solaris 9-LED red reflectors, and (10) Solaris 6-LED white reflectors and Opticom. Includes (2) flashers, (1) for red LEDs and (1) for white LEDs.	$6,789
5300-0209	Federal ADX7265 LED Lightbar 72". Includes (10) Solaris 6-LED red reflectors, (10) Solaris 6-LED blue reflectors, (4) Solaris 9-LED red reflectors, and a 3M Opticom. Includes (2) flashers, (1) for red LEDs and (1) for blue LEDs.	$5,463
5300-0211	Light bar Whelen Freedom model FN60QLED 60" LED with MKEZ7 mounts. Includes (8) red, (2) white and (2) amber modules. Location: Centered on the front cab roof	$4,627
5300-0212	Light bar Whelen Freedom model FN72VLED 72" LED with MKEZ7 mounts. Includes (10) red LED and (4) white LED. N/A INTL Chassis. Location: Centered on the front cab roof.	$4,704
5300-0213	Light bar Code 3 MX model 769NFPA1 with Opticom. Upper deck contains 5 rotators w/ red lenses. Lower deck contains 795H Opticom and intersection sweeps w/clear lenses. Location: Centered on the front cab roof.	$3,040
5300-0214	Light bar Whelen Freedom model FN72QLED 72" LED with GTT Opticom, clear lenses and MKH8 high mounts. N/A INTL Chassis. Location: Centered on the front cab roof	$5,897

5300-0215	Light bar Whelen Freedom model FL2RRRRF 72" LED with MK8H high mounts. Includes (10) red LEDs and (4) blue LEDs. N/A INTL Chassis. Location: Centered on the front cab roof.	$4,873
5300-0216	Light bar Whelen Freedom 72" LED with (8) red LEDs, (2) white LEDs, side facing LR11 alley lights, 3M Opticom, clear lenses and MKEZ7 mounts. N/A INTL Chassis. Location: Centered on the front cab roof	$6,153
5300-0217	Light bar Federal Signal AeroDynic ADX7205 72" with 12 red Solaris LED reflectors and 2 traffic clearing lts. Location: Centered on the front cab roof.	$3,313
5300-0219	Light bar Whelen Freedom model FL2RRRR 72" LED with MKEZ7 mounts and clear lenses. Includes (12) red LEDs, (2) clear LEDs and GTT Opticom. N/A INTL Chassis and vista cabs. Location: Centered on the front cab roof.	$6,020
5300-0220	Light bar Whelen Freedom 82" LED with MKEZ7 mounts and clear lenses. Includes (14) red LEDs and (2) LR11Takedown lights . N/A commercial Chassis. Location: Centered on the front cab roof	$5,101
5300-0232	Light bar Code 3 Excalibur model X69A. Upper deck contains (8) OPX-6 red LED modules and (1) LEDX modules in the center. Lower deck contains (10) OPX-6 red LED modules with a center mounted N-3 emitter. Lens color: Clear. Location: Centered on the front cab roof.	$5,345
5300-0233	Light bar Code 3 Excalibur 36". Upper contains (6) OPX-6 red LED modules. Lower contains (6) OPX-6 red LED modules. Lens color clear. Location: [#LOC].	$7,317
5300-0237	Light bar Whelen Freedom model FN66QLED 66" with 3M 9592 Opticom (switched on dash panel) and MKEZ7 mounts. All LED light bar without rear facing LEDs. Driver side red lights and officer side to be blue (standard white center) Location: Centered on the front cab roof.	$5,225
5300-0243	Light bar Whelen Freedom model FN82QLED 82" LED with clear lenses, Opticom and MKEZ7 mounts. Includes (7) red LED and (7) blue LED. N/A INTL Chassis. Location: Centered on the front cab roof.	$5,927
5300-0244	Whelen Mini-Freedom LED side facing light bars (PR) model FT8RRRRF driver and FT8BBBBF officer 28.25" with MKEZ7 mounts. Location: [#LOC]. Lense colors: Clear.	$3,919
5300-0246	Whelen Mini-Freedom LED light bars (PR) model FT8RCRCF 28.25" with clear lenses and MKEZ7 mounts. Location: [#LOC].	$4,091
5300-0250	Light bar package, Whelen 4500 red/blue LED (5) bar package. Includes: (1) 40'' LED front bar w/ Opticom, (2) diagonal 24'' LED bars and (2) 28'' side LED bars.	$12,127
5300-0251	Light bar Whelen Freedom model FN72QLED 72" LED with clear lenses, Opticom and MKEZ7 mounts. Includes (7) red LED, (3) blue LED and (2) white LED. N/A INTL Chassis. Location: Centered on the front cab roof.	$6,249
5300-0252	Light bar Whelen Freedom model FN72QLED 72" LED red/blue with MKEZ7 mounts. N/A INTL Chassis. Location: Centered on the front cab roof	$3,617
5300-0253	Whelen Mini-Freedom LED side facing light bars (PR) model FT8RRBBF driver and FT8BBRRF officer 28.25" with MKEZ7 mounts. Location: [#LOC]. Lense colors: Clear.	$3,919
5300-0254	Light bar Federal Signal ViewPoint. Two (2) 20" light bars LED 3 pod. Lenses shall be all clear. Includes red corner mounted LED modules and amber rear facing LED modules. Location: [#LOC].	$2,424
5300-0255	Light bar Federal Signal JLX2133-CNFPA LED (PR) with clear lenses. Location: [#LOC].	$2,053
5300-0257	Light bar Whelen Freedom model FN72QLED 72" LED with MKEZ7 mounts. Includes (1) driver forward facing steady burn to meet California law. N/A INTL Chassis. Location: Centered on the front cab roof.	$3,617
5300-0258	Light bar Federal Signal ViewPoint. Two (2) 20" light bars LED 3 pod. Lenses shall be driver Red/blue/Red - officer Blue/Red/Blue. Location: [#LOC].	$2,424
5300-0260	Light bar Whelen Freedom 66" LED with 3M Opticom, red lenses and MKEZ7 mounts. Includes (10) red LED and (2) LR11 dual alley lights. Location: Centered on the front cab roof.	$5,710
5300-0261	Light bar Federal Signal Legend. (2) 24" light bars LED side facing only. Lenses color: clear. Location: [#LOC].	$3,298
5300-0262	Light bars Federal Signal Vector/ViewPoint. One (1) center 21'' 3 pod with 3M 792 Opticom and two (2) side 26.5'' 4 pod light bars. Lenses to be R/R/W/R-R/Opticom/R-R/W/R/R. Location: ''V'' centered on the front cab roof.	$6,412
5300-0263	Light bar Federal Signal Legend 61" LED with alley lights, clear lenses and red diodes. Location: Centered on the front cab roof	$2,940
5300-0264	Whelen Mini-Freedom LED side facing light bars (PR) model FT8RCRRF driver and FT8BCBBF officer 24" with MKEZ7 mounts. Location: each side over rear cab doors. Lense colors: Clear.	$3,889
5300-0265	Whelen Mini-Freedom LED side facing light bars (PR) model FT8RCRRF driver and FT8BCBBF officer 24" with MKEZ7 mounts. Location: front cab corners. Lense colors: Clear.	$3,889
5300-0267	Light bar Whelen Justice model JE2NFPA 56" LED with clear lenses and MKEZ7 mounts. N/A on Vista roofs with front facing windows. Includes (4) red corner facing LIN6 LED lights, (6) forward facing CON3 Linear LED lights; (4) red, (2) white. Location: Centered on the front cab roof.	$2,158
5300-0268	Light bar Federal Signal ViewPoint. Two (2) 20" blue light bars LED 3 pod. Lenses shall be all clear. Location: front cab corners.	$2,424
5300-0269	Light bar Whelen Freedom model FN60VLED 60" LED with clear lenses and MKEZ7 mounts. Includes (6) red, (2) white, (4) blue modules and GTT Opticom. Location: Centered on the front cab roof.	$5,529
5300-0270	Light bar Whelen model 45B38 38" LED with Opticom. Location: Centered front of cab below windshield	$2,642
5300-0271	Light bar Whelen Freedom model FN72QLED 72" LED red/blue with MK8 high mounts. N/A INTL Chassis. Location: Centered on the front cab roof	$3,665
5300-0277	Light bar Whelen Freedom model FN72VLED 72" LED with MK8 mounts. N/A INTL Chassis or Vista roofs with front facing windows. Location: Centered on the front cab roof.	$3,664

5300-0278	Light bar Whelen 4500 LED red/clear (PR) side facing. Includes: (2) 28'' side LED bars. Location: [#LOC].	$4,546
5300-0279	Light bar Whelen 4500 LED red/clear (PR). Includes: (2) 24'' LED bars. Location: [#LOC].	$4,342
5300-0284	Light bar Whelen Freedom model FN82VLED 82" LED with MKEZ7 mounts and clear lenses. Includes (12) red, (4) white LEDs. N/A commercial Chassis. Location: Centered on the front cab roof	$5,406
5300-0285	Whelen Mini-Freedom LED side facing light bars (PR) model FT8RRRRF 24" with MK8H high mounts. Location: [#LOC]. Lense colors: Red.	$4,102
5300-0286	Light bar Whelen Freedom model FN72QLED 72" LED with MK8 high mounts. Includes (14) red LED with red lenses. N/A INTL Chassis. Location: Centered on the front cab roof.	$5,084
5300-0287	Light bar Whelen Freedom model FN82VLED 82" LED with MKEZ7 mounts and clear lenses. Includes (14) red, (4) white LEDs. N/A commercial Chassis. Location: Centered on the front cab roof	$5,719
5300-0288	Light bar Federal Signal JetStream 60" LED. Red/Blue Solaris reflectors with clear domes. NFPA Compliant, does not require 2 addl side facing bars. Location: Centered on the front cab roof	$2,609
5300-0290	Whelen Mini-Freedom LED light bars (PR) model FT8 28.25" with clear lenses and MKEZ7 mounts. Includes: (4) corner mounted red LED, (2) split red/white forward facing LED flashing in X pattern and (1) end mounted red LED Location: [#LOC].	$4,993
5300-0291	Whelen Mini-Freedom LED light bars (PR) model FT8 28.25" with clear lenses and MK8H high mounts. Includes: (4)corner mounted red LED, (2) split red/white forward facing LED flashing in X pattern and (1) end mounted red LED Location: [#LOC].	$5,038
5300-0292	Light bar Whelen Freedom model FN72QLED 72" LED with MK8 high mounts. Includes (8) red LED, (2) split red/white and (4) white LED. N/A INTL Chassis. Location: Centered on the front cab roof.	$5,324
5300-0293	Light bar Federal Signal Legend 61" LED with clear lenses and red diodes. Location: Centered on the front cab roof	$3,549
5300-0294	Light bar Whelen Freedom model FN72QLED 72" LED with MK8H mounts. Centered on the front cab roof.	$3,568
5300-0295	Light bar Whelen Freedom model FN72QLED 72" LED with 3M Opticom, clear lenses and MKH8 mounts. N/A INTL Chassis. Location: Centered on the front cab roof.	$5,850
5300-0297	Light bar Whelen Freedom model FN66QLED 66" with MKEZ7 mounts. All LED light bar without rear facing LEDs. Driver side red LED, officer blue LED. Location: Centered on the front cab roof.	$3,527
5300-0298	Light bar Whelen Freedom model FN72QLED 72" LED with MKEZ7 mounts. Location: Centered on the front cab roof.	$3,617
5300-0299	Light bar Whelen 4500 Series 20" LED (model 45B20). Location: Centered front of cab below windshield.	$1,609
5300-0300	Light bar Whelen Freedom model FN72QLED 72" LED with 3M Opticom, clear lenses and MKEZ7 mounts. N/A INTL Chassis. Location: Centered on the front cab roof.	$5,850
5300-0301	Light bar Whelen Freedom model FN72QLED 72" LED with Opticom and MK8 high mounts. Includes (8) red LED and (4) white LED with red/clear lenses. N/A INTL Chassis. Location: Centered on the front cab roof.	$5,678
5300-0302	Light bar Federal Signal Split Vision VSLR8-NFPA1. Two (2) 26.5" 4-pod light bars w/ (3) red and (1) multi-color pods on each bar with red/clear lenses. Location: [#LOC].	$3,741
5300-0303	Light bar Whelen Freedom model FN66QLED 66" with MKEZ7 mounts. Includes (10) red LED with red lenses and (2) white LED with clear lenses. Location: Centered on the front cab roof.	$4,209
5300-0304	Light bar Whelen Freedom model FN72QLED 72" LED with MK8 high mounts. Includes (5) red LED, (5) blue and (4) white LED . N/A INTL Chassis. Location: Centered on the front cab roof.	$5,084
5300-0305	Light bar Whelen Freedom model FN55QLED 55" LED with driver red/officer blue LEDS, takedown lights and MKEZ7 mounts. Location: Centered on the front cab roof.	$3,462
5300-0306	Light bar Federal Signal JetSolaris 60" LED. Red and blue Solaris reflectors with center traffic clearing light. NFPA Compliant, does not require 2 addl side facing bars. Location: Centered on the front body, mounted to the roof with no upper body or mounted on a bracket in front of the body with 13" upper body.	$2,538
5300-0307	Light bar Whelen Freedom model FN72QLED 72" LED with clear lenses, Opticom and MKEZ7 mounts. Includes (10) red LED and (2) white LED. N/A INTL Chassis. Location: Centered on the front cab roof.	$6,249
5300-0310	Light bar Whelen Freedom model FN72VLED 72" LED with Opticom and MK8H high mounts. Includes (10) red LED, (2) white LED and (2) blue LED. N/A INTL Chassis. Location: Centered on the front cab roof.	$6,192
5300-0312	Light bar Federal Signal ViewPoint. Two (2) 26.5" 4 pod LED light bars. Lenses to be R/B/B/R C/R/R/R. Location: front cab corners	$3,200
5300-0313	Light bar Federal Signal ADX2205 LED (PR) red/clear. State of Maryland only. Location: [#LOC].	$4,891
5300-0314	Light bar Federal Signal Legend. (2) 24" light bars LED. Lenses color: clear. (1) Model number LGD24Z-00019 and (1) model number LGD24Z-00020. Location: [#LOC].	$1,925
5300-0315	Whelen Mini-Freedom LED side facing light bars (PR) model FT8BRBRF driver and FT8RBRBF officer 28.25" with MKEZ7 mounts. Location: [#LOC]. Lense colors: Clear.	$3,919
5300-0317	Light bar Whelen Freedom model FN55QLED 55" with GTT 795H Opticom and MKEZ7 mounts. All LED light bar without rear facing LEDs. Location:[#LOC].	$4,568
5300-0318	Light bar risers (PR) for the light bars installed on the top of the cab to insure 360 degree visibility. The riser shall raise the as mounted light bar(s) approximately 4" to prevent interference with the brow lighting (if so equipped) and ensure 360 degree visibility is maintained.	$178

5300-0319	Light bar Whelen Freedom model FN60VLED 60" LED with MK8H mounts. N/A on Vista roofs with front facing windows. Location: Centered on the front cab roof	$4,599
5300-0322	Light bar made from (2) PowerArc model M90FK-RC light heads. Each light head houses (12) red LEDs (24 total) with clear lenses and a polished stainless steel flange. Includes oscillating technology. Both light heads when mounted together to make light bar are approximately 20" in length. Location: centered front of cab below windshield.	$1,540
5300-0325	Light bar Whelen Freedom model FN72VLED 72" LED with 795H Opticom, (12) red LEDs, (2) clear LEDs and MK8H mounts. N/A INTL Chassis or Vista roofs with front facing windows. Location: Centered on the front cab roof.	$7,448
5300-0326	Light bar Whelen Freedom model FN72QLED 72" LED with GTT Opticom, clear lenses and MK8H mounts. Includes (3) red LED, (3) blue LED and (2) white LED. N/A INTL Chassis. Location: Centered on the front cab roof.	$5,895
5300-0327	Light bar Whelen Freedom model FN82QLED 82" LED with MKEZ7 mounts and clear lenses. Includes (12) red, (2) white LEDs. N/A commercial Chassis. Location: Centered on the front cab roof	$4,470
5300-0328	Light bar Whelen Freedom model FN72QLED 72" LED with MK8 high mounts. Includes (8) red LED, (2) blue LED and (4) white LED. N/A INTL Chassis. Location: Centered on the front cab roof.	$5,084
5300-0329	Light bar Whelen Freedom model FN55QLED 55" LED with driver red/officer blue LEDS, takedown lights and MKEZ7 mounts. Location: Centered on the front cab roof.	$3,462
5300-0330	Light bar Whelen Freedom model FN72QLED 72" LED with MKE7 mounts. Includes (10) red LED and (4) white LED. N/A INTL Chassis. Location: Centered on the front cab roof.	$5,084
5300-0331	Light bar Federal Signal JetSolaris 60" LED. Clear/white Solaris reflectors with red domes. NFPA compliant. Does not require 2 addl side facing bars. Location: Centered on the front cab roof.	$2,463
5300-0333	Whelen Mini-Freedom LED side facing light bars (PR) model FT8RBRP 24" with MKEZ7 mounts. Location: [#LOC]. Lens color: Red/Blue.	$3,919
5300-0334	Light bar Whelen Freedom model FN72QLED 72" LED GTT Opticom and clear lenses, MKEZ7 mounts. Includes (8) red LED and (2) white LED. N/A INTL Chassis. Location: Centered on the front cab roof	$5,164
5300-0335	Federal ADX7204 LED lightbar 72". Includes (12) Solaris 9-LED red reflectors with clear lenses and Opticom. Location: Centered on the front cab roof.	$5,432
5300-0336	Federal ADX7204 LED lightbar 72". Includes (12) Solaris 9-LED red reflectors with lens arrangement of R/C/R/C/R/C/C/C/C/R/C/R/C/R and Opticom (with switch accessible to driver). Location: Centered on the front cab roof.	$5,432
5300-0337	Light bar Whelen Freedom model FN72QLED 72" LED with MK8H high mounts. Includes (8) red LED and (6) white LED. N/A INTL Chassis. Location: Centered on the front cab roof.	$4,769
5300-0338	Light bar Federal Signal ViewPoint. Two (2) 20" light bars LED 3 pod. All lenses shall be clear. LED modules shall be Red/White/Red - Red/White/Red. Location: [#LOC].	$2,687
5300-0339	Light bar Federal Signal JetSolaris 72" LED. Red and White Solaris reflectors with clear domes. NFPA compliant. Does not require 2 addl side facing bars. Location: Centered on the front cab roof.	$2,342
5300-0343	Light bar Whelen Freedom model FN72QLED 72" LED with clear lenses, MKEZ7 mounts and pre-wire for 3M opticom. Includes (3) red LED, (3) blue LED and (2) white LED. N/A INTL Chassis. Location: Centered on the front cab roof	$3,456
5300-0344	Light bar Whelen Justice model JE0NFPA 62" LED with clear lenses and MKEZ7 mounts. N/A on Vista roofs with front facing windows. Includes (4) red corner facing LIN6 LED lights, (6) forward facing CON3 Linear LED lights; (4) red, (2) white. Location: Centered on the front cab roof.	$2,268
5300-0345	Light bar Federal Signal Legend 70" LED with clear lenses and red diodes. Location: Centered on the front cab roof.	$3,173
5300-0346	Whelen Mini-Freedom LED light bars (PR) model FNMINI 24" with clear lenses and MKEZ7 mounts. Includes red/clear/blue driver and blue/clear/red officer. Location: [#LOC].	$4,091
5300-0347	Light bars Federal Signal One (1) center 3 pod Vision SLR model VSLR3S-NFPA1 LED light bar on 4" tall channel riser. One (1) Vision SLR model VSLR85-NFPA1 side light bars containing two (2) 4 pod LED light bars. Lenses to be R/R/W/R R/W/R R/W/R/R. Location: "V" centered on the front cab roof with the center pod mounted on 4" tall channel risers to accommodate an Opticom below (not included).	$5,553
5310-0000	Light bar Federal Signal, Signal Master SML6. Location: installed at the rear of the apparatus.	$815
5310-0001	Light bar Federal Signal Signal Master SML8.	$896
5310-0002	Light bar Federal Signal Signal Master SMLED6.	$1,391
5310-0003	Light bar Federal Signal Signal Master SMLED8.	$1,468
5310-0005	Whelen Traffic Advisor Model TA837A - 43.25" long.	$1,014
5310-0006	Whelen Traffic Advisor Model TA870A - 62" long.	$1,590
5310-0010	Light bar Federal Signal Signal Master SML430, 19.5" long (PR). Mounted each side rear of body.	$942
5310-0011	Light bar CODE 3 model AS10S Arrowstik, 47" long. Mounted center rear body.	$1,173
5310-0012	Diamond plate shield over rear directional light.	$291
5310-0014	Light bar CODE 3 model AS839 Arrowstik, 39" long. Lenses to be amber with red on the ends. Mounted center rear body.	$958
5310-0015	Light bar CODE 3 model NASL839 LEDX Narrowstik, 40.5" long. Lights heads are amber with red on the ends. Mounted center rear body.	$1,707
5310-0017	Whelen Traffic Advisor model TAL65 LED - 36" long.	$1,258
5310-0018	Whelen Traffic Advisor Model TAM65 LED - 36" long.	$1,626

5310-0019	Light bar Code 3 model NASL847 LED Narrowstik, 47" long. Mounted on rear of body.	$1,704
5310-0021	Light bar CODE 3 model NASL839 LEDX Narrowstik, 40.5 inches long. Mounted center rear body.	$1,707
5310-0023	Light bar CODE 3 model NASL630 LEDX Narrowstik, 30.5 inches long.	$1,531
5310-0024	Whelen Traffic Advisor Model TA870L LED- 56" long.	$2,413
5310-0025	Directional light circuit wiring through upper level warning.	$71
5310-0027	Whelen Traffic Advisor Model TAM85 LED - 47" long.	$2,275
5310-0028	Whelen Traffic Advisor Model TAM83 LED - 31" long.	$1,667
5310-0029	Smooth plate shield painted job color over rear directional light.	$504
5310-0030	Whelen Traffic Advisor Model TA870L LED- 62" long.	$3,263
5310-0031	Whelen Traffic Advisor model TA-4437L LED, split (2) 22.75" long. Locate one each side on rear panel of body.	$1,905
5310-0034	Whelen Traffic Advisor Model TA870L SPL 48" long (PR) with (6) 700 series Super LED amber modules. Location: (1) each side facing on forward compartment tops. Control located officers side of center overhead.	$5,230
5310-0035	Whelen Traffic Advisor Model TAL85 LED - 47" long.	$1,583
5310-0042	Whelen Traffic Advisor Model TAZ86 LED - 31" long.	$2,092
5310-0043	Whelen Traffic Advisor Model TANF65 LED - 34" long.	$1,601
5310-0044	Light bar Federal Signal Signal Master Viper EXT LED 42" with 8 lights.	$1,665
5310-0045	Light bar Federal Signal Signal Master Viper EXT LED 31" with 6 lights.	$1,469
5310-0046	Whelen Traffic Advisor Model TANF85 LED - 45" long.	$1,977
5350-0000	Camera backup Intec with monochrome monitor.	$4,204
5350-0001	Camera back-up Safety Vision LCD model SV-CLCD70BA-625B with audio. For use with up to 2 cameras.	$1,897
5350-0025	Back up camera for Vehicle Information Control Center. Video displays automatically when transmission is in reverse.	$639
5350-0026	Side facing camera mtd up high on officer side of the cab centrally located (above canopy window if applicable) interlocked with right turn signal. Displays video on vehicle information control center.	$639
5350-0027	Side facing camera mtd up high on driver side of the cab centrally located (above canopy window if applicable) interlocked with left turn signal. Displays video on vehicle information control center.	$639
5350-0028	Forward facing camera mounted (approximately) center of cab.	$639
5350-0048	Setcom intercom system with (6) cab jacks and (1) pump panel jack. Custom cabs only. Headsets to be shipped loose.	$8,316
5350-0054	Safety Vision officer's side camera. Requires Safety Vision back-up camera option. SV-620 Kit w/ SV-523. Camera to be located on officer's side mirror.	$829
5350-0060	Diamond plate camera shield.	$194
5350-0061	Safety Vision driver's side camera. Requires Safety Vision back-up camera option. SV-620 Kit w/ SV-523. Camera to be located on driver's side mirror.	$829
5350-0070	Voyager back-up camera. Video displays automatically when transmission is in reverse. Camera only - does not include monitor.	$645
5350-0071	Voyager side mtd rear facing camera positioned up high on officer side of the cab centrally located (above canopy window if applicable) interlocked with right turn signal. Camera only - does not include monitor.	$627
5350-0072	Voyager side mtd rear facing camera positioned up high on driver side of the cab centrally located (above canopy window if applicable) interlocked with left turn signal. Camera only - does not include monitor.	$627
5350-0073	Voyager forward facing camera mounted upper center area of cab.	$589
5350-0074	Sigtronics US-45S intercom system with (4) cab jacks, (1) pump panel jack, four headsets / hooks, PTT switches for driver / ppnl. Does not include radio interface cable. Custom cabs only. Headsets to be shipped loose.	$3,961
5350-0076	David Clark model 3800 intercom system with (5) cab head sets. Headsets to be shipped loose.	$6,503
5350-0078	Smooth plate camera shield painted job color (match the "two tone" sale code color, if two tone applies).	$299
5350-0079	Sigtronics US-45D intercom system with (3) cab jacks, (1) pump panel jack, three headsets / hooks, PTT switches for driver/officer/ppnl. Does not include radio interface cable. Custom cabs only. Headsets to be shipped loose.	$3,739
5350-0080	Camera back-up Safety Vision LCD model SV-CLCD70A-625B with split screen capable monitor and audio. For use with up to 4 cameras.	$2,223
5350-0081	Backup Camera to be located in recess direction lightbar box offset to officer side.	$194
5350-0083	See instructions on file with sales for locations of headset plug-ins.	$90
5350-0084	David Clark model 3800 intercom system with (6) cab head sets. Headsets to be shipped loose.	$7,355
5350-0085	Safety Vision officer's side camera SV-622RS w/ SV-512 cable. Requires Safety Vision back-up camera option. Camera to be located up high on officer side of the cab centrally located (above canopy window if applicable) interlocked with right turn signal. Camera only - does not include monitor.	$858
5350-0086	Safety Vision driver's side camera SV-622LS w/ SV-512 cable. Requires Safety Vision back-up camera option. Camera to be located up high on driver side of the cab centrally located (above canopy window if applicable) interlocked with left turn signal. Camera only - does not include monitor.	$858
5350-0109	Safety Vision DVR with SV-620A camera on front of cab roof offset to driver side of center marker light. Quest cab only. No monitor.	$2,540

5350-0110	Camera backup Zone Defense LCD model SYS-323-1-4Q with split screen capable monitor.	$1,831
5350-0111	Camera backup Zone Defense LCD model SYS-323-1-4.	$1,233
5350-0112	Sigtronics US-67S intercom system with (6) cab jacks, six headsets / hooks, PTT switches for driver / officer. Does not include radio interface cable. Custom cabs only. Headsets to be shipped loose.	$5,169
5350-0114	Sigtronics US-67D intercom system with (6) cab jacks, six headsets / hooks, PTT switches for driver / officer. Does not include radio interface cable. Custom cabs only. Headsets to be shipped loose.	$5,270
5350-0116	Federal Signal back-up/DVR camera system. Includes front view, rear view camera, side view cameras, split screen monitor and DVR.	$3,643
5350-0118	Camera backup Federal Signal LCD model CAMSET70-NTSC-4.	$1,109
5350-0121	Install supplied ICA110-05 Radio as required by Customer. Antenna installed at manufacturers discretion. Programming to be done by Customer. Wire to Master switch to toggle radio on and off with master power.	$820
5350-0123	Sigtronics US-12S intercom system with (7) cab jacks, (1) pump panel jack, seven headsets / hooks, PTT switches for driver / officer / ppnl. Does not include radio interface cable. Custom cabs only. Headsets to be shipped loose.	$5,930
5350-0126	Custom radio installation quote for West Metro, Mn. See file for details.	$11,430
5350-0127	Flashback 2 digital video system. System includes (2) forward facing cameras and color monitor.	$12,510
5350-0130	David Clark model 3800 intercom system with (6) cab head sets and (1) pump panel jack. Custom cabs only. Headsets to be shipped loose.	$9,220
5350-0132	David Clark model 3800 intercom system with four (4) cab head sets and one (1) pump panel jack. Radio interfaced to three (3) positions, driver , turret operator and pump panel. Headsets to be shipped loose.	$9,549
5350-0134	Voyager back-up camera wire through multiplex display. Video displays automatically when transmission is in reverse.	$645
5350-0136	Sigtronics US-67D intercom system with (5) cab jacks, (1) pump panel jack, (1) driver rear body jack, five headsets / hooks, PTT switches for driver / officer / ppnl / rear body. Does not include radio interface cable. Custom cabs only. Headsets to be shipped loose.	$4,906
5350-0137	Sigtronics US-45S intercom system with (4) cab jacks, four headsets / hooks, PTT switches for driver / officer. Does not include radio interface cable. Custom cabs only. Headsets to be shipped loose.	$3,855
5350-0140	Safety Vision officer's side camera SV-622RS w/ SV-512 cable. Requires Safety Vision back-up camera option. Camera to be located on officer's side gravel shield offset to the rear.	$829
5350-0141	Safety Vision driver's side camera SV-622LS w/ SV-512 cable. Requires Safety Vision back-up camera option. Camera to be located on driver's side gravel shield offset to the rear.	$829
5350-0142	Safety Vision officer's side camera. Requires Safety Vision back-up camera option. SV-620 Kit w/ SV-523. Camera to be located on officer's side of cab above tank level lights.	$829
5350-0144	Safety Vision officer's side camera. Requires Safety Vision back-up camera option. SV-620 Kit w/ SV-523. Camera to be located on officer's side of cab above scene light.	$829
5350-0158	Camera back-up Safety Vision LCD model SV-CLCD70B-625B with audio. Located in cab dash on bracket (see photos).	$1,897
5350-0169	Camera back-up Safety Vision LCD model SV-CLCD-64-810 with lens shutter that opens when the unit is put in reverse.	$1,962
5350-0173	Safety Vision driver's side camera SV-622LS w/ SV-512 cable. Requires Safety Vision back-up camera option. Camera to be located on driver's side above forward tandem of rear axle.	$829
5350-0174	Safety Vision officer's side camera SV-622RS w/ SV-512 cable. Requires Safety Vision back-up camera option. Camera to be located on officer's side above forward tandem of rear axle.	$829
5350-0175	David Clark model 3800 intercom system with (4) cab head sets. Headsets to be shipped loose.	$5,651
5350-0176	David Clark model 3800 intercom system with (5) cab head sets and (1) pump panel jack. Custom cabs only. Headsets to be shipped loose.	$8,413
5350-0177	FireCom (4) position wireless 5yr extended warranty. Includes 5-day repair time with 2-day shipping.	$1,639
5350-0180	Safety Vision officer's side camera SV-622RS w/ SV-512 cable. Requires Safety Vision back-up camera option. Camera to be located up high on officer side of the cab centrally located (above canopy window if applicable) interlocked with left turn signal. Camera only - does not include monitor.	$858
5350-0181	Camera back-up Safety Vision LCD model SV-CLCD70BA-620A with audio. For use with up to 2 cameras.	$2,036
5350-0182	Safety Vision officer's side camera SV-622RS w/ SV-512 cable. Requires Safety Vision back-up camera option. Camera to be located on front cab corner (approx 31" bottom of camera to bottom of cab) interlocked with right turn signal. Camera only - does not include monitor.	$858
5350-0183	Safety Vision driver's side camera SV-622LS w/ SV-512 cable. Requires Safety Vision back-up camera option. Camera to be located on front cab corner (approx 31" bottom of camera to bottom of cab) interlocked with left turn signal. Camera only - does not include monitor.	$858
5350-0186	Back-up camera speaker. For use with VMUX electrical system. Located in cab accessible to driver.	$196
5350-0188	Federal Signal (Sony) back-up camera wire through multiplex display. Video displays automatically when transmission is in reverse.	$623
5350-0189	Zone Defense PathFindIR FLIR camera. Located centered below windshield. For use with Safety Zone Defense split screen back-up camera system only. Includes guarded switch on driver side lower dash area.	$5,704

5350-0190	Zone Defense side camera. Requires Zone Defense back-up camera option. Camera to be located on driver's and officer's side mirror.	$437
5350-0192	Safety Vision back-up camera wired through multiplex display. Video displays automatically when transmission is in reverse. Camera only - does not include monitor.	$829
5350-0193	Voyager rear facing camera positioned on officer's side front cab corner (approx 31" bottom of camera to bottom of cab) interlocked with right turn signal. Camera only - does not include monitor.	$627
5350-0194	Voyager rear facing camera positioned on driver's side front cab corner (approx 31" bottom of camera to bottom of cab) interlocked with left turn signal. Camera only - does not include monitor.	$627
5350-0196	Sigtronics US-67D intercom system with (5) cab jacks, (1) pump panel jack, five headsets / hooks, PTT switches for driver / officer / ppnl. Does not include radio interface cable. Custom cabs only. Headsets to be shipped loose.	$4,619
5350-0197	Safety Vision officer's side camera SV-622RS w/ SV-512 cable. Requires Safety Vision back-up camera option. Camera to be located on front fender interlocked with right turn signal. Camera only - does not include monitor.	$858
5350-0198	Voyager rear facing camera positioned on officer's side front fender interlocked with right turn signal. Camera only - does not include monitor.	$627
5350-0199	FireCom intercom kit to include a digital intercom model 5100D, four (4) plug in modules and headset hooks shall be installed within the cab. Headsets are not included and ordered separately (misc loose equip).	$2,431
5350-0200	FireCom intercom kit to include a digital intercom model 5100D, four (4) plug in modules and headset hooks shall be installed within the cab and one (1) exterior pump panel plug in module. Headsets are not included and ordered separately (misc loose equip).	$2,640
5350-0201	FireCom intercom kit to include a digital intercom model 5100D, six (6) plug in modules and headset hooks shall be installed within the cab. Headsets are not included and ordered separately (misc loose equip).	$2,754
5350-0202	FireCom intercom kit to include a digital intercom model 5100D, six (6) plug in modules and headset hooks shall be installed within the cab and one (1) exterior pump panel plug in module. Headsets are not included and ordered separately (misc loose equip).	$3,000
5350-0203	FireCom intercom kit to include a digital intercom model 5100D, five (5) plug in modules and headset hooks shall be installed within the cab. Headsets are not included and ordered separately (misc loose equip).	$2,611
5350-0204	FireCom intercom kit to include a digital intercom model 5100D, five (5) plug in modules and headset hooks shall be installed within the cab and one (1) exterior pump panel plug in module. Headsets are not included and ordered separately (misc loose equip).	$2,820
5350-0205	FireCom wireless intercom kit to include a digital intercom model 5100D, two (2) base transmit units with radio transmission, one (1) base transmit unit for intercom only (no radios) and four (4) headset hooks shall be installed within the cab. Headsets are not included and ordered separately (misc loose equip).	$3,756
5350-0206	FireCom wireless intercom kit to include a digital intercom model 5100D, two (2) base transmit units with radio transmission, one (1) base transmit unit for intercom only (no radios) and five (5) headset hooks shall be installed within the cab. Headsets are not included and ordered separately (misc loose equip).	$3,787
5350-0207	FireCom wireless intercom kit to include a digital intercom model 5100D, two (2) base transmit units with radio transmission, one (1) base transmit unit for intercom only (no radios) and six (6) headset hooks shall be installed within the cab. Headsets are not included and ordered separately (misc loose equip).	$3,817
5350-0208	FireCom intercom kit to include a dual radio digital intercom model 5200D, four (4) plug in modules and headset hooks shall be installed within the cab. Headsets are not included and ordered separately (misc loose equip).	$2,851
5350-0209	FireCom intercom kit to include a dual radio digital intercom model 5200D, four (4) plug in modules and headset hooks shall be installed within the cab and one (1) exterior pump panel plug in module. Headsets are not included and ordered separately (misc loose equip).	$3,061
5350-0210	FireCom intercom kit to include a dual radio digital intercom model 5200D, six (6) plug in modules and headset hooks shall be installed within the cab. Headsets are not included and ordered separately (misc loose equip).	$3,174
5350-0211	FireCom intercom kit to include a dual radio digital intercom model 5200D, six (6) plug in modules and headset hooks shall be installed within the cab and one (1) exterior pump panel plug in module. Headsets are not included and ordered separately (misc loose equip).	$3,421
5350-0212	FireCom intercom kit to include a dual radio digital intercom model 5200D, five (5) plug in modules and headset hooks shall be installed within the cab. Headsets are not included and ordered separately (misc loose equip).	$3,032
5350-0213	FireCom intercom kit to include a dual radio digital intercom model 5200D, five (5) plug in modules and headset hooks shall be installed within the cab and one (1) exterior pump panel plug in module. Headsets are not included and ordered separately (misc loose equip).	$3,241

5350-0214	FireCom wireless intercom kit to include a dual radio digital intercom model 5200D, two (2) base transmit units with radio transmission, one (1) base transmit unit for intercom only (no radios) and four (4) headset hooks shall be installed within the cab. Headsets are not included and ordered separately (misc loose equip).	$4,147
5350-0215	FireCom wireless intercom kit to include a dual radio digital intercom model 5200D, two (2) base transmit units with radio transmission, one (1) base transmit unit for intercom only (no radios) and five (5) headset hooks shall be installed within the cab. Headsets are not included and ordered separately (misc loose equip).	$4,177
5350-0216	FireCom wireless intercom kit to include a dual radio digital intercom model 5200D, two (2) base transmit units with radio transmission, one (1) base transmit unit for intercom only (no radios) and six (6) headset hooks shall be installed within the cab. Headsets are not included and ordered separately (misc loose equip).	$4,207
5350-0219	Safety Vision officer's side camera SV-622RS w/ SV-512 cable. Requires Safety Vision back-up camera option. Camera to be located on the officer side cab, up high behind front door, below the scene light interlocked with right turn signal. Camera only - does not include monitor.	$858
5350-0221	Setcom intercom kit to include a intercom model IM-900 and four (4) plug in modules shall be installed within the cab. Headsets are not included and ordered separately (misc loose equip).	$1,187
5350-0222	Setcom dual radio intercom kit to include a intercom model IM-900 and four (4) plug in modules shall be installed within the cab. Headsets are not included and ordered separately (misc loose equip).	$1,610
5350-0223	Setcom intercom kit to include a intercom model IM-900, four (4) plug in modules shall be installed within the cab and (1) pump panel plug in module. Headsets are not included and ordered separately (misc loose equip).	$1,510
5350-0224	Setcom dual radio intercom kit to include a intercom model IM-900, four (4) plug in modules shall be installed within the cab and (1) pump panel plug in module. Headsets are not included and ordered separately (misc loose equip).	$1,933
5350-0225	Setcom intercom kit to include a intercom model IM-900 and five (5) plug in modules shall be installed within the cab. Headsets are not included and ordered separately (misc loose equip).	$1,469
5350-0226	Setcom dual radio intercom kit to include a intercom model IM-900 and five (5) plug in modules shall be installed within the cab. Headsets are not included and ordered separately (misc loose equip).	$1,892
5350-0227	Setcom intercom kit to include a intercom model IM-900, five (5) plug in modules shall be installed within the cab and (1) pump panel plug in module. Headsets are not included and ordered separately (misc loose equip).	$1,793
5350-0228	Setcom dual radio intercom kit to include a intercom model IM-900, five (5) plug in modules shall be installed within the cab and (1) pump panel plug in module. Headsets are not included and ordered separately (misc loose equip).	$2,214
5350-0229	Setcom intercom kit to include a intercom model IM-900 and six (6) plug in modules shall be installed within the cab. Headsets are not included and ordered separately (misc loose equip).	$1,469
5350-0230	Setcom dual radio intercom kit to include a intercom model IM-900 and six (6) plug in modules shall be installed within the cab. Headsets are not included and ordered separately (misc loose equip).	$1,892
5350-0231	Setcom intercom kit to include a intercom model IM-900, six (6) plug in modules shall be installed within the cab and (1) pump panel plug in module. Headsets are not included and ordered separately (misc loose equip).	$1,793
5350-0232	Setcom dual radio intercom kit to include a intercom model IM-900, six (6) plug in modules shall be installed within the cab and (1) pump panel plug in module. Headsets are not included and ordered separately (misc loose equip).	$2,214
5350-0233	Setcom wireless intercom kit to include a intercom model IM-900 and four (4) wireless adapters shall be installed within the cab. Headsets are not included and ordered separately (misc loose equip).	$1,725
5350-0234	Setcom wireless dual radio intercom kit to include a intercom model IM-900 and four (4) wireless adapters shall be installed within the cab. Headsets are not included and ordered separately (misc loose equip).	$2,147
5350-0235	Setcom wireless intercom kit to include a intercom model IM-900 and five (5) wireless adapters shall be installed within the cab. Headsets are not included and ordered separately (misc loose equip).	$2,120
5350-0236	Setcom wireless dual radio intercom kit to include a intercom model IM-900 and five (5) wireless adapters shall be installed within the cab. Headsets are not included and ordered separately (misc loose equip).	$2,543
5350-0237	Setcom wireless intercom kit to include a intercom model IM-900 and six (6) wireless adapters shall be installed within the cab. Headsets are not included and ordered separately (misc loose equip).	$2,234
5350-0238	Setcom wireless dual radio intercom kit to include a intercom model IM-900 and six (6) wireless adapters shall be installed within the cab. Headsets are not included and ordered separately (misc loose equip).	$2,657
5350-0239	David Clark model 3800 intercom system with (4) cab head sets and (1) pump panel jack. Custom cabs only. Headsets to be shipped loose.	$7,606

5350-0241	Zone Defense side camera. Requires Zone Defense back-up camera option. Camera to be located on officer's side mirror.	$234
5350-0242	FireCom (8) position, (1) which is wireless. Intercom kit to include a digital quad radio monitor intercom model 5400D, one (1) base transmit unit with radio transmission (for wireless), seven (7) plug in modules and eight (8) headset hooks shall be installed within the cab. Headsets are not included and ordered separately (misc loose equip).	$5,194
5350-0243	FireCom intercom kit to include a digital intercom model 5100D, eight (8) plug in modules and headset hooks shall be installed within the cab. Headsets are not included and ordered separately (misc loose equip).	$3,150
5350-0245	FireCom (2) wireless (2) plug in intercom kit to include a digital intercom model 5100D, two (2) base transmit units with radio transmission for forward poisitions, (2) plug in modules for rear positions and four (4) headset hooks shall be installed within the cab. Headsets are not included and ordered separately (misc loose equip).	$3,424
5350-0246	Voyager rear facing camera positioned on officer's side front cab mirror (approx 31" bottom of camera to bottom of cab) interlocked with right turn signal. Camera only - does not include monitor.	$627
5350-0247	Remote 5100D head for Firecom intercom. Location: [#LOC].	$539
5350-0248	Remote 5200D head for Firecom intercom. Location: [#LOC].	$611
5380-0004	Compartment light incandescent additional (EA). Locate opposite of standard (if applicable) in compartment [#LOC]	$69
5380-0005	Compartment light Truck-Lite LED additional (EA). Locate opposite of standard in compartment [#LOC].	$179
5380-0006	Compartment light incandescent additional (EA). Door(s) mounted. Compartment [#LOC].	$107
5380-0007	Compartment light Truck-Lite LED additional (EA). Door(s) mounted. Compartment [#LOC].	$244
5380-0008	Compartment light package incandescent for small bodies.	$462
5380-0009	Compartment light package incandescent for medium bodies.	$689
5380-0011	Compartment light package LED for small bodies.	$1,646
5380-0012	Compartment light package Truck-Lite LED for medium bodies.	$2,752
5380-0014	Compartment light package ROM for small bodies. Includes one light per compartment (two if transverse). (OBSOLETE FROM VENDOR)	$1,791
5380-0015	Compartment light package ROM for medium bodies. Includes one light per compartment (two if transverse). (OBSOLETE FROM VENDOR)	$2,859
5380-0017	Compartment light package POK LED for small bodies. Includes one light per compartment (two if transverse).	$2,119
5380-0018	Compartment light package POK LED for medium bodies. Includes one light per compartment (two if transverse).	$3,463
5380-0020	Compartment light ROM 14-48" long additional (EA). Locate [#LOC]. (OBSOLETE FROM VENDOR)	$283
5380-0021	Compartment light ROM 49-84" long additional (EA). Locate [#LOC]. (OBSOLETE FROM VENDOR)	$419
5380-0022	Compartment light POK LED additional (EA). Locate [#LOC].	$305
5380-0023	Compartment light POK LED additional (EA). Locate [#LOC].	$524
5380-0027	Ground light package for cab and body - small.	$429
5380-0029	Ground light package for cab and body - large.	$643
5380-0030	Ground light package LED - small.	$1,401
5380-0032	Ground light package LED - large.	$2,097
5380-0033	Step light package body - small.	$400
5380-0035	Step light package body - large.	$599
5380-0036	Step light package body LED - small.	$1,371
5380-0038	Step light package body LED - large.	$2,055
5380-0042	Light recessed step Truck-Lite incandescent (additional). Locate [#LOC].	$110
5380-0045	Light recessed step Truck-Lite LED (additional). Locate [#LOC].	$167
5380-0053	Lights under rear intermediate step LED (2). 4" grommet mounted lights. Lights operated with switch on rear of body. Locate switch below driver side intermediate step.	$497
5380-0055	Cab and body ground lights to be wired through chassis reverse.	$71
5380-0056	Compartment lights to be wired to automatically activate when park brake is set (IPO cab mtd compartment light switch).	$71
5380-0059	Additional incandescent ground lights. Locate below L1/R1 and L3/R3.	$482
5380-0060	Additional LED ground light (EA). Location: Below [#LOC].	$188
5380-0061	LED hosebed walkway light package. Includes lighting located to the outboard side of the walkway and (1) at the rear of the walkway facing forward. Lights to be switched with work light switch in cab.	$646
5380-0062	Compartment light Federal Signal LED additional (EA). Locate opposite of standard in compartment [#LOC].	$125
5380-0063	Compartment light Federal Signal LED additional (EA). Door(s) mounted. Compartment [#LOC].	$188
5380-0064	Compartment light package Federal Signal LED for small bodies.	$1,316
5380-0065	Compartment light package Federal Signal LED for medium bodies.	$2,237
5380-0067	Ground light package Federal Signal LED - small.	$1,401
5380-0068	Ground light package Federal Signal LED - large.	$2,098
5380-0069	Step light package body Federal Signal LED - small.	$1,053
5380-0070	Step light package body Federal Signal LED - large.	$1,581
5380-0071	Light Federal Signal recessed step LED (additional). Locate [#LOC].	$134

5380-0072	Additional Federal Signal LED ground light (EA). Location: Below [#LOC]	$177
5380-0075	Compartment light incandescent additional (EA). Locate on ceiling of [#LOC].	$69
5380-0076	Compartment light deluxe package Whelen PSC0CDCR LED for medium bodies. Light to be stacked vertically on both sides of compartment.	$7,196
5380-0077	Compartment light package Amdor Luma-Bar LED for medium bodies. Includes one light per compartment (two if transverse).	$2,258
5380-0078	Compartment light Amdor Luma-Bar LED 26-42" long additional (EA). Locate [#LOC].	$218
5380-0079	Compartment light Amdor Luma-Bar LED 48-74" long additional (EA). Locate [#LOC].	$332
5380-0081	Compartment light package Whelen LED for medium bodies.	$4,285
5380-0082	Ground light package Whelen LED - large.	$2,836
5380-0083	Step light package Whelen LED - large.	$2,836
5380-0085	Compartment light package incandescent for small bodies.	$462
5380-0087	Compartment light package Weldon LED for medium bodies.	$1,840
5380-0088	Ground light package Weldon LED - small.	$1,262
5380-0089	Step light package body Weldon LED - small.	$918
5380-0090	Compartment light LED (EA). Location: [#LOC].	$179
5380-0098	Compartment light package Whelen PSC0CDCR LED for medium bodies. Light to be stacked vertically on one side of compartment.	$3,598
5380-0111	Compartment light Amdor LED for medical cabinet (EA).	$218
5380-0116	Ground light package Amdor Luma-Bar H2O LED - large.	$1,625
5380-0121	(2) Incandescent 4" round lights for use with preconnect module. Locate (1) each side on front compartment face down low.	$152
5380-0122	(2) Weldon LED 4" round lights for use with preconnect module. Locate (1) each side on front compartment face down low.	$224
5380-0123	Incandescent ground light package for cab, body and transverse/preconnect modules. Includes (1) light under each cab crew door (Lights under the driver and crew area exits to activate automatically with door is opened), (1) light under each side of the extended front bumper gravel shield (when applicable), (1) light centered each side below the transverse/preconnect module, (2) lights below rear tailboard area and (1) light centered below the pump operator compartment.	$526
5380-0124	Weldon LED ground light package for cab, body and transverse/preconnect modules. Includes (1) light under each cab crew door (Lights under the driver and crew area exits to activate automatically with door is opened), (1) light under each side of the extended front bumper gravel shield (when applicable), (1) light centered each side below the transverse/preconnect module, (2) lights below rear tailboard area and (1) light centered below the pump operator compartment.	$540
5380-0125	Incandescent body compartment light package for body and preconnect module. Lights locate (1) each preconnect tool compartment, (2) each for L1/R1, (1) each for L2/R2 and (2) each for L3/R3 (pump operator compartment to have the lights in the lower area only)	$689
5380-0126	Incandescent body compartment light package for body and transverse module. Lights locate (4) transverse module- (2) each on forward wall of each opening, (2) each for L1/R1, (1) each for L2/L3 and (2) each for L3/R3 (pump operator compartment to have the lights in the lower area only)	$618
5380-0127	LED body compartment light package for body and preconnect module. Lights locate (1) each preconnect tool compartment, (2) each for L1/R1, (1) each for L2/R2 and (2) each for L3/R3 (pump operator compartment to have the lights in the lower area only)	$982
5380-0128	LED body compartment light package for body and transverse module. Lights locate (4) transverse module- (2) each on forward wall of each opening, (2) each for L1/R1, (1) each for L2/R2 and (2) each for L3/R3 (pump operator compartment to have the lights in the lower area only)	$1,084
5380-0129	ROM LED body compartment light package and LED preconnect module. Lights (4" LED) locate (1) each side preconnect tool compartment, ROM LED strip (1) each for L1/R1, (1) each for L2/R2 and (1) each for L3/R3.	$1,741
5380-0130	ROM LED body and transverse compartment lighting package. Includes ROM strip lights located (4) lights for the transverse - (1) each side of the compartment opening, (1) each for L1/R1, (1) each for L2/R2 and (1) each for L3/R3.	$2,648
5380-0132	Compartment light Weldon LED additional (EA). Locate opposite of standard in compartment [#LOC].	$103
5380-0133	Light recessed step Weldon LED (additional). Locate [#LOC]	$113
5380-0138	Compartment light ROM V3 LED 24-36" long additional (EA). Locate [#LOC].	$242
5380-0139	Compartment light ROM V3 LED 42-72" long additional (EA). Locate [#LOC].	$405
5380-0140	Compartment light ROM V3 LED for medical cabinet (EA).	$297
5380-0141	Compartment light package ROM V3 LED for medium bodies. Includes one light per compartment (two if transverse).	$2,697
5380-0142	Compartment light package ROM V3 LED for medium bodies. Includes two lights per compartment (four if transverse).	$5,394
5380-0143	Compartment light ROM V3 LED additional (EA) ceiling mounted as close to door opening as practical. Location: [#LOC].	$297
5380-0144	Compartment light package Amdor Luma-Bar LED for medium bodies. Includes two lights per compartment (four if transverse).	$4,515
5380-0146	Compartment light Amdor LED additional (EA) ceiling mounted as close to door opening as practical. Location: [#LOC].	$218

5380-0150	ROM V3 LED strip lights for NFPA hose bed lighting. The lights to be mounted inside hose bed cover thru cover plate on outer skin. Light will illuminate the hose bed area thru slots in the inner skin.	$1,524
5380-0161	Light recessed step Truck-Lite incandescent. Locate one each side of top mount walkway.	$219
5380-0162	Light recessed step Truck-Lite LED. Locate one each side of top mount walkway.	$333
5380-0163	Light recessed step Federal Signal LED. Locate one each side of top mount walkway.	$269
5380-0166	Compartment light Trucklite LED additional (EA). Locate in [#LOC].	$179
5380-0167	Rear body TecNiq model Eon step light package.	$532
5380-0182	Ground light package EON LED - large.	$1,175
5380-0183	TM Walkway lighting Tecniq EON LED. Includes (3) lights with S/S housings low on front of module to illuminate top mount walkway. eMAX only	$214
5380-0187	Compartment light package ROM V3 LED for small bodies. Includes one light per compartment (two if transverse).	$1,659
5380-0188	Compartment light package ROM V3 LED for small bodies. Includes two lights per compartment (four if transverse).	$3,317
5380-0189	Compartment light package Amdor Luma-Bar LED for small bodies. Includes one light per compartment (two if transverse).	$1,408
5380-0190	Compartment light package Amdor Luma-Bar LED for small bodies. Includes two lights per compartment (four if transverse).	$2,815
5380-0202	Step light package body EON LED - large.	$1,100
5380-0203	Step light package body EON LED - small.	$870
5380-0207	Intermediate pump panel step lights (PR). EON LED lights.	$110
5380-0209	Compartment light Amdor LED for medical cabinet (PR).	$436
5380-0210	Compartment light ROM V3 LED for medical cabinet (PR).	$594
5380-0212	Lights (PR) Tecniq EON LED lights, 1 each side (driver and officer side) of the speedlay storage compartment.	$217
5380-0214	Compartment light Truck-Lite LED additional (EA). Locate on ceiling of [#LOC].	$179
5380-0215	Six (6) 30" Amdor LED strip lights for NFPA hose bed lighting. The perimeter of the hose bed shall be framed on the top surface of the front, left and right side walls. The aluminum perimeter framing shall be used to mount the strip lights (2) each side and (2) in front to provide illumination of the hose bed area. This perimeter framing shall also be used to secure the vinyl hose bed cover and protect the lighting during stow and deploy hose bed operations.	$2,142
5380-0216	Ground light package LED for chassis. Includes (6) Trucklite LED lts.	$1,205
5380-0217	Compartment light Whelen Fluorent Plus for medical cabinet (PR).	$617
5380-0218	Step light package Whelen LED - small.	$1,569
5380-0220	Compartment light package, Whelen Fluorent Plus, for medium bodies. Includes two lights per compartment (four if transverse).	$6,702
5380-0221	LED body compartment light package for body. Lights locate (2) each for L1/R1, (1) each for L2/R2, (2) each for L3/R3 and (2) each for L4/R4 (pump operator compartment to have the lights in the lower area only)	$1,084
5380-0223	Amdor V3 LED strip lights for NFPA hose bed lighting. The lights to be mounted inside hose bed cover thru cover plate on outer skin. Light will illuminate the hose bed area thru slots in the inner skin.	$2,142
5380-0226	Compartment light Amdor integral white lumbar. Location: [#LOC].	$193
5380-0228	Stainless steel bolt on light guard to protect hose bed lightring fixture(s) from damage.	$103
5390-0000	Deck light - Unity 12 volt (PR). Location: [#LOC].	$338
5390-0001	Hose bed light Unity. Locate at front area of hose bed. Switched with work light switch in cab.	$164
5390-0002	Hose bed light Federal Signal GH Scene. Locate at the front area of hose bed. Switched with work light switch in cab.	$212
5390-0003	Hose bed light Truck-Lite. Locate at the front area of the hose bed. Switched with work light switch in cab.	$98
5390-0004	Crosslay lights Weldon. Locate on each side at rear of crosslay (SM) or forward of crosslay (TM) approx. 16" from side of body.	$301
5390-0005	Crosslay light deck Unity. Locate to rear of crosslay (SM) or forward of crosslay (TM).	$160
5390-0006	Deck lights, Collins FX-12R (PR). Location: [#LOC].	$965
5390-0007	Deck/scene light circuit wiring through chassis reverse. Requires rear deck or scene light.	$71
5390-0008	Federal Signal GH scene lights (PR). Switch in cab (driver and officer side facing lights switched separately). Locate [#LOC].	$399
5390-0018	Whelen 600 series 26 degree scenelights (PR) with weatherproof connectors. Switch in cab (driver and officer side facing lights switched separately). Locate [#LOC].	$315
5390-0019	Whelen 700 series 8-32 degree scenelights (PR) with weatherproof connectors. Switch in cab (driver and officer side facing lights switched separately). Locate [#LOC].	$309
5390-0020	Whelen 900 series Gradient Opti-Scenelight (PR) with weatherproof connectors. Switched in cab (driver and officer side facing lights switched separately). Locate [#LOC].	$315
5390-0022	Crosslay light Truck-Lite. Locate to rear of crosslay (SM) and forward of crosslay (TM as applicable). Switched with work light switch in cab.	$98
5390-0023	Tomar 46H13-C 13 degree scene lights (PR) with weatherproof connectors. Switch in cab (driver and officer side lights switched separately). Locate [#LOC].	$350
5390-0024	Deck Light - Truck-Lite (PR). Location: [#LOC].	$293

5390-0025	Cab scene lights are to be switched with cab doors in addition to standard.	$71
5390-0026	Federal Signal GH Scene cornering lights (PR) wired to turn signals, reverse and work lights. Location: [#LOC]	$763
5390-0027	Hosebed light Whelen 600 series 26 degree scene light with Cast Products LH46501 housing. Locate at the front area of hosebed. Switched with worklight switch in cab.	$196
5390-0029	Crosslay light Whelen 600 series 26 degree scene light with Cast Products LH46501 housing. Locate to rear of crosslay (SM) and forward of crosslay (TM as applicable). Switched with worklight switch in cab.	$196
5390-0030	Deck Lts-Collins FX-6 (PR) Location: [#LOC]	$965
5390-0031	Crosslay light Federal GH Scene light with Cast Products LH90603 housings (PR). Locate on back of cab 1" below roof between vista windows.	$571
5390-0032	(PR) Collins FX-12 w/Internal Poles. Locate (1) each side in deck gun channel. Lights to serve as hosebed/crosslay lighting when applicable.	$1,682
5390-0034	Whelen 600 series 26 degree scene lights (PR) with weatherproof connectors. To be used as cornering lights wired to turn signals and four way flashers. Interlock through park brake. Location: [#LOC].	$315
5390-0035	Federal Signal GH Scene Light (PR). Locate (1) at the front area of hosebed and (1) rearward of the crosslays. Switched with worklight switch in cab. Includes diamond plate mounting box.	$724
5390-0036	Hose bed light circuit wiring through chassis reverse. Requires hose bed light.	$71
5390-0038	4" LED light (black groument) with diamond plate box mount (PR). Locate (1) at front of hosebed and (1) at the crosslay area. Switch with work light switch.	$656
5390-0039	Federal Signal GH Scene lights (PR). Switch in cab (driver and officer side facing lights switched together). Locate [#LOC]	$399
5390-0040	Weldon 4 x 6 HID scene lights (PR) with weatherproof connectors. Switch in cab (driver and officer side lights switched separately). Locate [#LOC].	$1,120
5390-0041	Whelen 900 series Gradient Opti-Scene lights (PR) with diamond plate mounting box. Switch in cab (driver and officer side facing lights switched separately). Locate [#LOC].	$475
5390-0042	Whelen 900 series model 90C0ENZR Super LED Opti-Scene light (PR) with weatherproof connectors. Switch in cab (driver and officer side lights switched separately). Locate [#LOC].	$1,523
5390-0043	Crosslay light Trucklite. Locate forward of crosslay. Switched with work light switch in cab.	$98
5390-0044	4" LED light (black groument) with diamond plate box mount at front of hosebed. Switch with work light switch.	$319
5390-0046	Federal Signal GH Scene Light (PR). Locate (1) forward facing for preconnect storage lighting and (1) rearward facing for hosebed storage lighting. Both lights mounted in (1) formed box mounted off forward area of body. Box may shift side to side for best lighting application. both lights switched with worklight switch.	$724
5390-0047	Federal Signal GH scene Light. Locate rearward facing for hose bed storage lighting. Mounted in (1) formed box mounted off forward area of body. Box may shift side to side for best lighting application. Light switched with worklight switch.	$363
5390-0048	Whelen 600 series gradient Super LED scene lights (PR) with weatherproof connectors. Switch in cab (driver and officer side lights switched separately). Locate [#LOC].	$922
5390-0049	Whelen 600 series 26 degree scene lights (PR) with LH46001 castings. Switch in cab (side facing lights switched separately). Locate [#LOC].	$403
5390-0050	Whelen 500 series LED scene lights (PR) with weatherproof connectors. To be used as cornering lights wired to turn signals and four way flashers. Interlocked with park brake. Location: [#LOC]	$774
5390-0051	Whelen 600 series gradient Super LED scene lights (PR) with weatherproof connectors. To be used as cornering lights wired to turn signals and four way flashers. Location: [#LOC].	$922
5390-0052	Federal Signal GH Scene lights (PR) with diamond plate mounting box. Switch in cab (driver and officer side facing lights switched separately). Locate [#LOC].	$724
5390-0054	Hosebed light Trucklite. Locate (1) each side front of hosebed. Switched with work light switch in cab.	$196
5390-0055	Light Federal Signal GH Scene. Locate at the front area of hosebed. Switched with worklight switch in cab. Includes diamond plate mounting box.	$363
5390-0056	Crosslay light Weldon. Locate to rear of crosslay (SM) or forward of crosslay (TM). Switched with work light switch in cab.	$152
5390-0057	Hosebed light Weldon. Locate at front area of hosebed. Switched with work light switch in cab.	$152
5390-0058	Deck Light - Truck-Lite LED model 81380 (PR). Location: [#LOC].	$369
5390-0059	Whelen 600 series 26 degree scene lights (PR) with diamond plate mounting box. Switch in cab (side facing lights switched separately). Locate [#LOC].	$502
5390-0066	Whelen 600 series gradient Super LED scene lights (PR) with weatherproof connectors and diamond plate mounting boxes. Switch in cab (driver and officer side lights switched separately). Locate [#LOC].	$1,011
5390-0068	Havis Shield 12V HID scene lights model KR-4035X-D (PR). Location(s): [#LOC]. Includes switch in cab for side facing lights.	$1,462
5390-0069	Whelen M9 Linear Super LED scene lights (PR). Switched in cab (lights mtd on the sides of apparatus to be switched separately). Locate [#LOC].	$1,506
5390-0070	Crosslay light Collins FX-12. Locate to rear of crosslay (SM) and forward of crosslay (TM as applicable).	$484

5390-0071	Hosebed light Collins FX-12. Located center front of hosebed. Switched with work light switch in cab	$484
5390-0072	Speedlay Light Federal Signal GH Scene. Locate on front of upper pump module facing downward to illuminate speedlays. Switched with worklight switch in cab.	$212
5390-0073	Deck Light - Whelen LED model PFBP12C (PR). Location: [#LOC].	$978
5390-0075	Speedlay light Trucklite. Locate forward area of pump module. Switched with work light switch in cab.	$98
5390-0076	Hose bed light Truck-Lite LED model 81380. Locate at front of hose bed. Switched with work light switch in cab.	$185
5390-0077	Deck Lt-Collins FX-12R (EA) model KR-SB-312 with lift/push up pole. Due to body mount location a position indicator will not be required. Location(s): [#LOC].	$814
5390-0081	Deck Light - Grote LED model 63581 (PR) Location: [#LOC].	$1,538
5390-0082	Whelen 600 series 26 degree scene 24VDC lights (PR) with weatherproof connectors. Switch in cab (driver and officer side facing lights switched separately). Locate [#LOC].	$338
5390-0083	Federal Signal GH Scene light (EA). Switched with work light switch in cab. Locate up high driver rear of body.	$200
5390-0085	Speedlay light package. Includes (4) Kaper2 LED lights mounted (1) each side at speedlay openings to rear of extrusion. Switched with work light switch in cab.	$418
5390-0087	Whelen M6 Linear Super LED scene lights (PR). Switched in cab (lights mtd on the sides of apparatus to be switched separately). Locate [#LOC].	$1,082
5390-0088	Crosslay light Whelen PFBP12C LED. Locate to rear of crosslay (SM) and forward of crosslay (TM as applicable). Switched with work light switch in cab.	$489
5390-0089	Hose bed light Whelen PFBP12C LED. Locate center front of hose bed. Switched with work light switch in cab.	$489
5390-0090	Hosebed light Whelen 600 series Super LED scene light with diamond plate box. Locate at the front area of hosebed. Switched with worklight switch in cab.	$507
5390-0091	Crosslay light Whelen 600 series 26 degree Super LED scene light with diamond plate box. Locate to rear of crosslay (SM) and forward of crosslay (TM as applicable). Switched with worklight switch in cab.	$507
5390-0094	Federal Signal GH Scene light (EA). Switched with work light switch in cab. Locate up high center rear of body.	$200
5390-0095	FRC LED900 Scene light (PR). Switch in cab (driver and officer side lights switched separately). Locate [#LOC].	$1,514
5390-0096	Hosebed light Trucklite LED. Locate (1) in each outer hosebed upper front wall and (2) upper front wall of center hosebed . Switched with work light switch in cab.	$794
5390-0102	Crosslay light Truck-Lite LED model 81380. Locate to rear of crosslay (SM) and forward of crosslay (TM as applicable). Switched with work light switch in cab.	$185
5390-0103	Whelen 700 series gradient Super LED scene lights (PR) with weatherproof connectors. Switch in cab (driver and officer side lights switched separately). Locate [#LOC].	$895
5390-0104	Light Whelen Pioneer Plus model PFP1 with recess mount. Wired through work light switch in cab. Location(s): [#LOC].	$1,240
5390-0110	Hosebed light Grote LED model 63581. Locate center front of hosebed. Switched with work light switch in cab.	$770
5390-0111	Crosslay light Grote LED model 63581. Locate to rear of crosslay (SM) and forward of crosslay (TM as applicable). Switched with work light switch in cab.	$770
5390-0114	Whelen M6 Linear Super LED hosebed lights (PR) with weatherproof connectors and diamond plate mounting boxes. Locate equally spaced each side at the front area of hosebed. Switched with worklight switch in cab.	$1,244
5390-0117	Whelen 700 series gradient Super LED scene lights (PR). To be used as cornering lights wired to turn signals reverse and work lights. Location: [#LOC].	$922
5390-0118	Grote 63581 LED scene lights (6). Switch in cab (driver and officer side lights switched separately). Lights located (2) each side of body up high (offset forward and rearward) and (2) at rear of body up high. Wetside only.	$3,696
5390-0119	Light Whelen Pioneer Plus model PFP1 with ROM KR-SB-600-W4 pedestal side mount. Switched with work light switch in cab. Location(s): [#LOC].	$2,480
5390-0120	Whelen 900 series model 90C0ENZR Super LED Opti-Scene light (PR) with diamond plate mounting box. Switch in cab (driver and officer side lights switched separately). Locate [#LOC].	$1,684
5390-0122	Whelen 900 series model 90C0ENZR Super LED Opti-Scene light (PR) with cast products mounting box. Switch in cab (driver and officer side lights switched separately). Locate [#LOC].	$1,684
5390-0123	Federal Signal model QL97LEDSCENE LED scene light (PR) with weatherproof connectors. Includes switch accessible to driver (driver and officer side lights switched separately). Locate [#LOC].	$901
5390-0124	Whelen 600 series gradient Super LED scene lights (3) with weatherproof connectors. Wire through work light switch in cab. Locate back of cab evenly spaced up high.	$1,383
5390-0126	Whelen M6 Linear Super LED hosebed light with weatherproof connector and diamond plate mounting box. Locate at the front area of hosebed. Switched with work light switch in cab.	$622
5390-0127	Light Whelen 600 series 26 degree Super LED scene light. Locate to rear of body, driver side, centered vertically between tail light and upper rear warning. Switched with work-light switch in cab.	$507
5390-0129	Hose bed light FRC LED900 with diamond plate mounting box. Locate [#LOC]. Switched with worklight switch in cab.	$838

5390-0130	Deck light Whelen PAR-36, model PFBP12C LED (PR). Switched with work light switch in cab. Location: [#LOC].	$978
5390-0131	Crosslay light deck Unity. Locate light on the drivers side rearward of the crosslay door mounted on the Hot Shot II pan cover lid.	$160
5390-0132	Warning light Federal Signal QL64-BACKUP (PR) white with clear lens. Surface mounted with bezel. Location: [#LOC]	$561
5390-0133	Deck light - Unity 12 volt LED (PR). Location: [#LOC].	$925
5390-0136	Whelen M9LZC Linear Super LED scene lights (PR), includes flange. Switched in cab (lights mounted on the sides of apparatus to be switched separately). Locate [#LOC].	$1,396
5390-0137	Whelen M9 Linear Super LED scene lights (PR) with weatherproof connectors and diamond plate mounting boxes. Switch in cab (driver and officer side lights switched separately). Locate [#LOC]..	$1,666
5390-0139	Crosslay light Whelen PFBP12C LED (PR). Locate on each side at rear of crosslay (SM) or forward of crosslay (TM). Location: [#LOC]. Switched with work light switch in cab.	$978
5390-0140	Whelen 700 series gradient Super LED scene light (EA) with weatherproof connector(s). Switch in cab (driver and officer side lights if applicable switched separately). Locate [#LOC].	$439
5390-0141	Hosebed light Trucklite LED. Locate (1) in driver outer hosebed upper front wall and (2) upper front wall of center hosebed . Switched with work light switch in cab.	$595
5390-0143	Crosslay light deck Unity. Locate to driver side rear of crosslay.	$160
5390-0144	Unity deck light with model TP-1-I internal pull-up pole. Includes switch on lighthead and driver side overhead console. Location: [#LOC].	$543
5390-0145	EA (1) Collins FX-12 w/Internal Pole. Locate (1) Drivers side in deck gun channel. Light to serve as hosebed/crosslay lighting when applicable.	$841
5390-0146	Whelen M6 series gradient Super LED scene lights (PR) with weatherproof connectors. To be used as cornering lights wired to turn signals and four way flashers. Location: (1) each side offset rearward of rear most axle.	$1,348
5390-0149	Whelen 900 series model 90C0ENZR Super LED Opti-Scene light (EA) with diamond plate mounting box. Switch in cab (driver and officer side lights switched separately). Locate [#LOC].	$842
5390-0150	Whelen 900 series model 90C0ENZR Super LED Opti-Scene light (EA) with cast products mounting box. Switch in cab (driver and officer side light(s) switched separately). Locate [#LOC].	$842
5390-0151	Whelen M6 Linear Super LED scene lights (PR) with weatherproof connectors and diamond plate mounting boxes. Location: [#LOC]. Switched with worklight switch in cab.	$1,244
5390-0152	Whelen 600 series gradient Super LED suface mounted scene lights (PR) with weatherproof connectors. Switch in cab (driver and officer side lights switched separately). Locate [#LOC].	$922
5400-0003	Engine compartment light (EA).	$115
5400-0004	Incandescent pump panel light - additional (EA). Location: [#LOC].	$86
5400-0005	Pump panel LED light package with (2) Whelen strip lights per side pump panel. Not available on panels over 45" wide. Side mount only.	$729
5400-0006	Pump panel LED light package with (3) lights per side pump panel. Pump panels over 45" may require additional lights. Side mount only.	$1,047
5400-0007	LED pump panel light - additional (EA). Location: [#LOC].	$179
5400-0008	(1) pump panel light over the pump control area to be wired to come on when pump shift is placed in pump. (Side mount forward light noted, Top Mount is center light.)	$37
5400-0009	Pump panel LED light package - top mount. Includes (2) lights per side pump panel and (3) lights for top mount panel. Side pump panels over 45" wide may require additional lights. Top mount only.	$1,225
5400-0010	Incandescent pump compartment light (EA).	$124
5400-0011	LED pump compartment light (EA).	$336
5400-0020	Federal NightFighter light with internal pole. Locate [#LOC]. Switched on light head.	$1,167
5400-0021	Federal NightFighter Light with External Pole. Locate [#LOC]. Switched on light head.	$2,019
5400-0030	Fog Lights, Quartz Halogen (PR) [#COL] and located [#LOC].	$254
5400-0031	Pair of Cab Dome Large Lights mounted driver and officer side front. N/A on E-One Chassis. Required on Comm Chassis.	$69
5400-0032	Pair of Cab Dome Large Lights mounted driver and officer side Rear. N/A on E-One Chassis or two door commercial chassis. Required on Comm Chassis.	$69
5400-0033	Cab Dome Lts Red/White 4" incandescent. White light wired through door and light assembly mounted rocker switch. Red light through light assembly mounted rocker switch.	$523
5400-0034	Dome Lts Red 4" (Ea) [#LOC]. Includes assembly mounted rocker switch.	$124
5400-0035	Dome Lts White 4" incandescent. Includes assembly mounted rocker switch. Requires one for each cab door.	$141
5400-0037	Dome Lts Red/White Incandescent. Package includes two lights mounted in the front and two mounted in the rear of the cab. White light wire through door and light assembly mounted switch. Red light through light assembly mounted switch.	$502
5400-0038	Spotlights, 6" Unity (PR) cab post mount.	$411
5400-0039	Spotlight Specialty 2150 hand held located on officer's side of cab dash - hardwired.	$352
5400-0041	Spotlight, Federal Visibeam II Remote. If one is selected it will be located centered on cab roof mounted on a bracket. If two are selected, they will be located one each side of cab roof to rear of light bar.	$620
5400-0042	Map light, Sunnex [#LOC].	$300
5400-0043	Maplight-Little Lt 18" Flex [#LOC]. Includes on/off switch.	$203

5400-0047	Pump panel light package with (3) lights per side pump panel. Pump panels over 45" may require additional lights. Side mount only.	$588
5400-0048	Pump panel light package - top mount. Includes (2) lights per side pump panel and (3) lights for top mount panel. Top mount only.	$683
5400-0054	Spotlight Specialty 2150 hand held located on officer's side of cab dash w/12V receptacle.	$352
5400-0057	Dome lts red/white 4" LED (4). Lights to be located two front and two rear. White light wired through door and light assembly mounted rocker switch. Red light through light assembly mounted rocker switch.	$1,355
5400-0059	Optronics model QH-3000 handheld 12v spotlight. To be hardwired on officer's side of cab dash.	$136
5400-0060	Spotlight Specialty 2150 hand held located on driver's side 3 x 3 post - hardwired.	$352
5400-0061	Golight model 2049 remote control spotlight with black housing. If one is selected it will be located centered on cab roof on a pedestal to rear of light bar. If two are selected, they will be located one each side of cab roof to rear of light bar.	$776
5400-0062	Code 3 model GLB3200 remote control spotlight with black housing. If one is selected it will be located centered on cab roof on a pedistal to rear of lightbar. If two are selected, they will be located one each side of cab roof to rear of lightbar.	$1,108
5400-0064	Dome Lts Red/White 4" LED (5). Lights to be located two front and three rear. White light wired through door and light assembly mounted rocker switch. Red light through light assembly mounted rocker switch.	$1,692
5400-0065	Map light, Littlite 18" flexible LED. Location: [#LOC].	$232
5400-0068	Pump panel LED light package with (3) Whelen 500 lights per side pump panel. Center light on each side to be wired through pump engage. Side mount only.	$1,135
5400-0069	Map light Sunnex HS 761-20 with frosted lens. Location: Officer overhead console inboard of AC vent.	$262
5400-0070	Whelen 700 Series cornering lights (PR) located on ends of bumper gravel shield ahead of warning lights. Lights to have 8-32 degree internal optics and chrome flange. Includes cornering light relay circuits.	$673
5400-0071	Spotlight, Collins CL-12-M hand held located on officer's side of cab dash, hardwired. Includes Handlelok 1004 bracket.	$424
5400-0074	Pump panel LED light package. Includes (2) Whln LED strip lights driver side above upper panel, (2) Whln LED strip lights officer side mid-way up on upper hinged panel, (2) 4" grommet mount lights on driver side front compt face, (1) in line with side discharges and (1) at upper pump panel split, and (1) 4" grommet mount light on officer side front compt face down low.	$1,841
5400-0075	Dome Lts Red/White LED/Incandescent. Package includes two red/white incandescent lts mtd in the frt of the cab and two 4'' red/white LED lts mtd in the rear of the cab. White lt wired through door and lt assy mounted switch. Red lt wired through lt assy mounted switch.	$929
5400-0076	Golight model 2020 permanent spotlight. Location: Centered top of lightbar.	$615
5400-0080	FRC Night Master light with external push-up pole. Locate [#LOC]. Switched on light head.	$1,117
5400-0081	Golight model 2067 remote control spot light with white housing. If one is selected it will be located centered on cab roof on a pedestal to rear of light bar. If two are selected, they will be located one each side of cab roof to rear of light bar.	$776
5400-0082	Maplight-Little Lt 18" Flex [#LOC]. Includes dimmer switch.	$203
5400-0083	Map light Sunnex HS 761-20 with red lens and dimmer switch. Location: Officer overhead console inboard of AC vent.	$262
5400-0084	SpotLt-Fed VisibeamII Remote. If one is select it will be located center on forward vista roof. If two are selected, they will be located one each side front corners of vista cab roof.	$620
5400-0085	Enclose pump panel LED light package with (3) lights per side pump panel. Side mount only.	$1,396
5400-0086	Spotlight Specialty 2150 hand held located on font of map box - hardwired.	$352
5400-0087	Map light Sunnex model HS741-27 with red lens. Location: [#LOC].	$280
5400-0088	LED Amdor Luma-Bar pump panel lighting. (1) each side.	$1,110
5400-0089	Federal Signal Ultrastar Green LED w/ clear lens. Locate on L1 on compt top. Includes switch on pump panel labeled "Hydrant".	$615
5400-0090	Spotlight Specialty 2150 hand held located on officer's side 3 x 3 post - hardwired.	$352
5400-0091	Zico cornering light (PR) with polished stainless steel housing model #ZQL-SS-H7614 wired through turn signals. Includes cornering light relay. Lights to be directed downward. Location: (1) each side of gravel shield (forward).	$922
5400-0092	Weldon pump panel LED light package with (3) lights per side pump panel. Pump panels over 45" may require additional lights. Side mount only.	$853
5400-0093	Golight model 2049 remote control spotlight with black housing (PR) located one each side of cab roof to rear of lightbar. Driver light control located on driver dash switch panel. Officer light control located on officer dash switch panel. (Quest cab only)	$1,551
5400-0096	Pump panel light package - top mount. Includes (2) lights per side pump panel and (2) lights for top mount panel.	$547
5400-0097	Maplight-Havis Shield 12" Flex LED. Location: [#LOC].	$226
5400-0098	Pump panel LED light package with (3) Whelen 4"round lights per side pump panel. Pump panels over 45" may require additional lights. Side mount only.	$1,047
5400-0099	SM Pump module panel light package. Includes (2) incandescent lights per side of the module (main panel in body compartmetn will have lighting provided seperately).	$392

5400-0100	Weldon side mount pump panel light package. Includes (2) LED lights per side of the module (main panel in body compartment will have lighting provided seperately).	$426
5400-0104	Spotlight Specialty 2150 hand held located on officer's side, side facing engine cover offset forward below cab dash - hardwired.	$352
5400-0105	Weldon pump panel LED lighting package with (3) lights for pump operator panel (with shield) and (3) lights for rear pump panel. Rear Mount only.	$421
5400-0106	Pump panel incandescent lighting package with (3) lights for pump operator panel (with shield) and (3) lights for rear pump panel. Rear Mount only.	$588
5400-0107	Weldon pump panel LED light package - top mount. Includes (2) lights per side pump panel and (3) lights for top mount panel. Side pump panels over 45" wide may require additional lights. Top mount only.	$963
5400-0108	Cab Dome Large Lights mounted centered over front seat. N/A on E-0ne Chassis. Required on Comm Chassis.	$35
5400-0109	Weldon LED pump panel light - additional (EA). Location: [#LOC].	$133
5400-0111	Whelen 600 series Super LED blue. Locate driver side rear compartment face below upper level warning. Includes switch on pump panel labeled "HYDRANT".	$466
5400-0112	Innovative Lighting backing light (PR) with polished housing model #580-0200-1. Location: [#LOC].	$329
5400-0119	Whelen green LIN6 green battery indicator light. Location: driver side behind cab grille. Light will be interlocked through park brake.	$276
5400-0125	SpotLt-Fed VisibeamII Remote. Officer side of cab roof to rear of lightbar mounted on a bracket.	$620
5400-0127	Top mount pump module LED lighting. Includes (3) lights located along the upper top mount control panel, (2) side pump panel lights - (1) driver side and (1) officer side and (2) top mount walkway lights.	$776
5400-0128	Weldon crosslay LED light package with (3) lights. Located on forward wall of light tower shield.	$427
5400-0129	Spotlight Collins CL-12-M hand held located on officer's side of cab dash - hardwired. Includes Handlelok 1004 bracket, shipped loose.	$424
5400-0130	Spotlight Optronics Blue Eye model KB4000 hand held located on officer's side of cab dash - hardwired.	$210
5400-0131	Pump panel LED light package Amdor Luma Bar H2O. Includes (1) light per side pump panel (2 driver if split panel). Side mount only.	$854
5400-0132	Incandescent pump panel and runningboard lighting package. Includes (3) lights shield mounted on the driver side and (1) 4" recessed light mounted on the officer side compartment face.	$588
5400-0133	Golight model 2067 remote control spotlight with white housing. Locate (1) each side cab corner outboard of forward facing lightbar without pedestal. Requires additional side facing warning lights to meet NFPA.	$776
5400-0137	Pump panel LED light package for side mount eMAX. Includes (6) Tecniq EON lights with S/S housings, located (3) each side above lower side intake / discharge panels. Includes S/S light shields. SM eMAX only.	$348
5400-0139	Pump panel LED light package for top mount eMAX. Includes (12) Tecniq EON lights with S/S housings, (6) for TM panel and (3) each side for lower side intake / discharge panels. Includes S/S light shields for side panels. TM eMAX only.	$621
5400-0145	Pair of Cab Dome Large Lights mounted driver (clear) and officer (red) side front. N/A on E-One Chassis. Required on Comm Chassis.	$69
5400-0148	Maplight-Little Lt 12" Flex LED. Location: [#LOC].	$232
5400-0149	Pump panel Amdor H2O LED light package with (3) lights per side pump panel. Pump panels over 45" may require additional lights. Side mount only.	$861
5400-0151	Pump compartment light EON LED. Wired to work light.	$200
5400-0154	Spotlight Specialty 2150 hand held located on center of cab dash with plug-in connector.	$352
5400-0155	Cab Dome Large Light (PR). (1) mounted centered centered in the front and rear headliners. N/A on E-0ne Chassis. Required on Comm Chassis.	$69
5400-0156	Spotlight Collins CL-12-M handheld. Light to be hardwired and bracket (Handlelok 1004) to be mounted to the rear of the center console.	$424
5400-0157	Spotlight Whelen PAR46 Super LED hand held located on officer's side of cab dash - hardwired.	$577
5400-0158	Spotlights, 6" Unity LED (EA) cab post mount. Location: Officer side cab A post.	$479
5400-0159	Optronics model QH-100 handheld 12v spotlight. To be hardwired on officer's side of cab dash.	$136
5400-0164	Spotlights, 6" Unity LED (PR) cab post mount.	$959
5400-0165	Pump compartment light EON LED. Light shall be switched from the cab dash with the work light switch.	$200
5400-0166	Fog lights (PR) Perlux 500 series model 05001-5 clear fog Light located [#LOC].	$551
5400-0167	(1) pump panel light over the pump control area to be wired to come on when pump shift is placed in pump. (Rearward light.)	$37
5400-0168	Whelen LED pump compartment light (EA).	$255
5400-0171	Compartment light EON LED IPOS. Location of light(s): [#LOC].	$131
5400-0172	Pump panel LED light package for side mount. Includes (3) Tecniq EON lights with S/S housings. Includes S/S light shield. Rear mount only.	$277
5400-0173	Spotlight Whelen PAR46 Super LED hand held located on officer's side of cab dash with plug-in connector.	$577
5450-0003	Quartz light KwikRaze 500W/110V model KR-905-I with internal telepole. Location(s): [#LOC]	$627

5450-0004	Quartz light KwikRaze 500W/110V model KR-SB-505-W/2-I with external telepole. Location(s): [#LOC]	$986
5450-0005	Quartz light Kwik Raze 500W/110V portable. Location(s): [#LOC].	$400
5450-0006	Quartz light KwikRaze 500W/110V model KR-SB-805-TM-I with external mount tripod telepole. Requires 110V receptacle. Location(s): [#LOC]	$1,465
5450-0007	Quartz light Kwik Raze 500W/110V with recess mount. Location(s): [#LOC].	$911
5450-0008	Quartz light Fire Research Focus 750W/110V model FCA510E-S75-SW with internal pull-up pole. Location(s): [#LOC].	$1,391
5450-0009	Quartz light Fire Research Focus 750W/110V model FCA530-S75-SR-SW with side mount push-up pole. Location(s): [#LOC].	$1,469
5450-0010	Quartz light Fire Research Focus 1000W/240V model FCA200-M12 with recess mount. Location(s): [#LOC].	$780
5450-0011	Quartz light Fire Research Optimum 900W/240V model OPA200-R90 with recess mount. Location(s): [#LOC].	$1,022
5450-0012	Quartz light Fire Research Focus 750W/110V model FCA570-S75 without pole. Location(s): [#LOC].	$1,085
5450-0015	Quartz light Fire Research Focus 750W/110V model FCA600-S75-ON-FC603 with 40" telescopic tripod pole. Location(s): [#LOC].	$1,488
5450-0016	Quartz light Fire Research Focus 750W/110V model FCA540-S75-SW with side mount pull up pole. Location(s): [#LOC].	$1,444
5450-0019	Quartz light Fire Research Focus 750W/110V model FCA802-S75-01 with brow mount (EA). Location(s): [#LOC].	$841
5450-0020	Quartz light Fire Research Focus 1500W/240V model FCA600-M15-ON-FC603 with telescopic tripod pole. Location(s): [#LOC].	$1,568
5450-0021	Quartz light Fire Research Optimum 750W/110V model OPA570-S75 without pole. Location(s): [#LOC].	$1,149
5450-0022	Quartz light Fire Research Optimum 150W/12V model OPA802-HD15-01 with brow mount (EA). Includes switch accessible to driver. Location(s): [#LOC].	$1,418
5450-0023	Quartz light Fire Research Optimum 150W/12V model OPA510E-HD15-SW with internal pole. Includes switch accessible to driver. Location(s): [#LOC].	$1,698
5450-0024	Quartz light Fire Research Optimum 750W/110V model OPA510E-S75-SW with internal pull up pole. Location(s): [#LOC].	$1,434
5450-0028	Quartz light Fire Research Optimum 750W/110V model OPA530-S75-SR-SW with side mount external pole. Location(s): [#LOC].	$1,512
5450-0030	Quartz light Fire Research Optimum 750W/110V model OPA600-S75-ON-OP603 with 40" telescopic tripod pole. Location(s): [#LOC].	$1,503
5450-0031	Quartz light Fire Research Optimum 750W/110V model OPA802-S75-01 with brow mount (EA). Location(s): [#LOC].	$899
5450-0032	Quartz light Fire Research Optimum 900W/240V model OPA600-R90-ON-OP603 with telescopic tripod pole. Location(s): [#LOC]	$1,598
5450-0033	Quartz light Fire Research Optimum 150W/12V model OPA530-HD15-SR-SW with side mount external pole. Includes switch accessible to driver. Location(s): [#LOC].	$1,896
5450-0034	Quartz light MagnaFire 900W/240V model KR-739-HD with portable base. Requires 220V receptacle. Location(s): [#LOC]	$587
5450-0035	Quartz light MagnaFire 900W/240V model KR-1939 with recess mount. Location(s): [#LOC].	$808
5450-0036	Quartz light MagnaFire 900W/240V model KR-SB-639 without pole. Location(s): [#LOC].	$939
5450-0037	Quartz light MagnaFire 900W/240V model KR-939-I with internal pole. Location(s): [#LOC].	$892
5450-0038	Quartz light MagnaFire 900W/240V model KR-SB-539-W/2-I with external pole. Location(s): [#LOC].	$1,168
5450-0039	Quartz light MagnaFire 900W/240V model KR-SB-839-TM-I with external mount tripod telepole. Requires 220 volt receptacle. Location(s): [#LOC].	$1,270
5450-0040	Quartz light MagnaFire 900W/240V model KR-1339 with low profile mount. Location(s): [#LOC]	$927
5450-0041	Quartz light MagnaFire 900W/240V model KR-1539 with cab brow mount (EA). Not available in front center due to DOT lights. Location(s): [#LOC].	$823
5450-0045	Quartz light MagnaFire 750W/120V model KR-736-HD with portable base. Requires 110V receptacle. Location(s): [#LOC]	$541
5450-0046	Quartz light MagnaFire 750W/120V model KR-1936 with recess mount. Location(s): [#LOC].	$840
5450-0047	Quartz light MagnaFire 750W/120V model KR-SB-636 without pole. Location(s): [#LOC].	$971
5450-0048	Quartz light MagnaFire 750W/120V model KR-936-I with internal pole. Location(s): [#LOC].	$963
5450-0049	Quartz light MagnaFire 750W/120V model KR-SB-536-W/2-I with external pole. Location(s): [#LOC].	$1,224
5450-0050	Quartz light MagnaFire 750W/120V model KR-SB-836-TM-I with external mount tripod telepole. Requires 110V receptacle. Location(s): [#LOC].	$1,410
5450-0051	Quartz light MagnaFire 750W/120V model KR-1336 with low profile mount. Location(s): [#LOC]	$865
5450-0052	Quartz light MagnaFire 750W/120V model KR-1536 with cab brow mount (EA). Location(s): [#LOC].	$763
5450-0054	Quartz light KwikRaze 1500W/220V model KR-SB-9S15-NCW-I with internal telepole. Location(s): [#LOC].	$713
5450-0055	Quartz light KwikRaze 1500W/220V model KR-SB-515-W/2-I with external telepole. Location(s): [#LOC]	$1,069
5450-0056	Quartz light KwikRaze 1500W/220V model KR-SB-815-TM-I with external mount tripod telepole. Requires 220V receptacle. Location(s): [#LOC]	$1,516
5450-0058	Quartz light Fire Research Optimum 1500W/240V model OPA510E-M15-SW with internal pull-up pole. Location(s): [#LOC].	$1,531

5450-0059	Quartz light Fire Research Optimum 750W/110V portable model OPA700-S75-OP703. Location(s): [#LOC].	$765
5450-0060	Quartz light Fire Research Focus 750W/120V model FCA300U-S75 with brow mount. Location: Center of cab brow.	$841
5450-0063	Quartz light Fire Research Optimum 900W/240V model OPA530-R90-SR-SW with bottom raise pole. Location(s): [#LOC].	$1,512
5450-0064	Quartz light Fire Research Focus 500W/120V model FCA200-S50 with recess mount. Location(s): [#LOC].	$855
5450-0065	Quartz light Fire Research Optimum 1000W/240V model OPA656-M12-ON-OP603 with telescopic tripod pole. Location(s): [#LOC]	$1,598
5450-0066	Quartz light Fire Research Optimum 1500W/240V model OPA512-M15-SW with internal thru roof push up pole. Location(s): [#LOC]	$1,596
5450-0067	Quartz light Fire Research Focus 500W/110V model FCA802-S50-01 with brow mount (EA). Light head and mount to be powder coated black. Location(s): [#LOC]	$819
5450-0068	Quartz light MagnaFire 750W/120V model KR-SB-436-I-XL with through ceiling push up pole (PR). Outer pole to be 12", inner pole to be 48". Both lights to be on one breaker. Includes support tubes on interior of cab and switch each side on rear cab wall to control lights. Location: One each side rear corner of cab roof.	$2,890
5450-0069	Quartz light MagnaFire 5000 500W/120V model KR-2555 with cab brow mount (EA). Location(s): [#LOC]. Not available in front center due to DOT lights.	$675
5450-0070	Quartz light MagnaFire 5000 500W/120V model KR-SB-555-W/2-I with external pole. Location(s): [#LOC].	$1,060
5450-0071	Quartz light Fire Research Optimum 750W/110V model OPA200-S75 with recess mount. Location(s): [#LOC].	$915
5450-0072	Quartz light Fire Research Optimum 1500W/240V model OPA100 with internal pole. Location(s): [#LOC].	$1,407
5450-0073	Quartz light Fire Research Focus 750W/120V model FCA300U-S75 with brow mount. Light head and mount to be powder coated black. Location: Center of cab brow.	$884
5450-0074	Quartz light timer (ea).	$127
5450-0075	Quartz light Fire Research Optimum 900W/240V model OPA510E-R90-SW with top raise pole. Location(s): [#LOC].	$1,512
5450-0076	Quartz light MagnaFire 5000 750W/120V model KR-3556 with front cab brow mount (EA). Quest cabs only. Location(s): [#LOC].	$763
5450-0077	Quartz light MagnaFire 5000 750W/120V model KR-3656 with side cab brow mount (EA). Quest cabs only. Location(s): [#LOC]	$763
5450-0078	Quartz light Fire Research Focus 750W/110V model FCA802-S75-01 with brow mount (EA). Light head and mount to be powder coated black. Location(s): [#LOC]	$884
5450-0079	Quartz light MagnaFire 750W/120V model KR-1536 with cab brow mount (EA). Light head and mount to be powder coated black. Location(s): [#LOC].	$807
5450-0080	Quartz light Fire Research Focus 750W/110V model FCA830-S75 with brow mount (EA). Quest and CII LTH aerial cabs only. Location(s): [#LOC].	$841
5450-0081	Quartz light Fire Research Optimum 750W/110V model OPA656-S75-ON-OP603 with 28" telescopic tripod pole. Location(s): [#LOC]	$1,503
5450-0082	Quartz light Fire Research Focus 750W/110V model FCA656-S75-ON-FC603 with 28" telescopic tripod pole. Location(s): [#LOC].	$1,488
5450-0083	Quartz light Fire Research Focus 1500W/240V model FCA530-M15-SR-SW with side mount push up pole. Location(s): [#LOC].	$1,475
5450-0084	Quartz light Fire Research Focus 150W/12V model FCA510E-D15-SW with internal pole. Includes switch accessible to driver. Location(s): [#LOC].	$1,057
5450-0089	Quartz light MagnaFire 900W/240V model KR-SB-539-W/2-I with external pole. Light head to be powder coated black. Location(s): [#LOC].	$1,211
5450-0091	Quartz light Fire Research Optimum 900W/240V model OPA200-R90 with recess mount. Location(s): [#LOC]. Includes plate stand-off box to allow lights to recess without intruding into hosebed area.	$1,126
5450-0092	Quartz light Fire Research Focus 750W/110V model FCA530-S75-SR-SW with side mount push-up pole. Light head and mounts to be powder coated black. Location(s): [#LOC].	$1,513
5450-0094	Quartz light Extenda-Lite 750W/110V model E-4750-EX-TL-UI-EX. Location(s): [#LOC].	$800
5450-0095	Quartz light Fire Research Focus 150W/12V model FCA300U-D15 with brow mount. Includes switch accessible to driver. Location: center of cab brow.	$969
5450-0096	Quartz light Fire Research Optimum 1000W/110V portable model OPA700-M10-OP703. Location(s): [#LOC].	$873
5450-0098	Quartz light Fire Research Optimum 1500W/240V model OPA600-M15-ON-OP603 with telescopic tripod pole. Location(s): [#LOC]	$1,661
5450-0099	Quartz light Fire Research Optimum 1500W/240V model OPA200-M15 with recess mount. Location(s):[#LOC].	$932
5450-0102	Quartz light Fire Research Focus 1000W/120V model FCA530-M10-SR-SW-ON with external push up pole. Location(s): [#LOC].	$1,568
5450-0114	Quartz light Fire Research Focus 1000W/120V model FCA200-M10 with recess mount. Location(s): [#LOC].	$780

5450-0115	Light Whelen 12 volt Pioneer Plus model PFP1 with brow mount (EA). Includes switch in cab (driver and officer side facing lights switched separately). Location(s): [#LOC].	$1,446
5450-0116	Quartz light Fire Research Focus 500W/110V model FCA600-S50-ON-FC603 with 40" telescopic tripod pole. Location(s): [#LOC].	$1,488
5450-0117	Light Whelen Pioneer Plus model PFP2 12V with brow mount and PFLASH (EA). Includes switch in cab (driver and officer side facing lights switched separately). Location(s): [#LOC].	$2,210
5450-0118	Quartz light Fire Research Focus 1000W/240V model FCA802-M12-01 with brow mount (EA). Location(s): [#LOC].	$892
5450-0121	Quartz light Fire Research Focus 1500W/240V model FCA530-M15-SR-SW-ON with external push up pole. Location(s): [#LOC].	$1,490
5450-0122	Light Whelen Pioneer Plus model PFP2 12V with brow mount (EA). Includes switch in cab accessible to driver (driver and officer side facing lights switched separately). Location(s): [#LOC].	$2,101
5450-0123	Light Whelen Pioneer Plus LED model PFP2 12V with PBAPEDD pedestal mount. Includes switch in cab (side facing lights switched separately). Location(s): [#LOC].	$2,079
5450-0124	Light Whelen Pioneer model PFA2 with brow mount (EA). Includes switch in cab (driver and officer side facing lights switched separately). Location(s): [#LOC].	$1,688
5450-0125	Quartz light MagnaFire 5000 750W/120V model KR-2556 with cab brow mount (EA). Location(s): [#LOC].	$763
5450-0126	Quartz light Fire Research Focus 750W/110V model FCA642-S75-ON-FC6F3 with 16.625" telescopic tripod pole. Location(s): [#LOC].	$1,488
5450-0127	Quartz light Fire Research Focus 150W/12V model FCA802-H15-01 with brow mount (EA). Includes switch accessible to driver. Location(s): [#LOC]	$1,372
5450-0128	FRC quartz light head and bracket (brow mount only) to be powdered coated job color (EA). Requires paint spray out sent to FRC for color matching.	$170
5450-0130	Quartz light MagnaFire 750W/120V model KR-2556 with cab brow mount (EA). Location(s): [#LOC]. Not available in front center due to DOT lights.	$763
5450-0131	Light Whelen Pioneer Plus model PFP2 12V with internal top raise pole mount (ROM model KR-9PFP2-S). Includes switch on light head. Location: [#LOC].	$1,872
5450-0134	Light Whelen Pioneer Plus model PFP2 12V with brow mount powder coated black (EA). Includes switch in cab (driver and officer side facing lights switched separately). Location(s): [#LOC].	$2,101
5450-0135	Quartz light Fire Research Focus 150W/12V model FCA802-H15-01 with brow mount (EA). Light head and mount to be powder coated black. Includes switch accessible to driver. Location(s): [#LOC].	$1,412
5450-0136	Light Whelen Pioneer Plus model PCP2 flood/spot with brow mount (EA). Includes switch in cab (driver and officer side facing lights switched separately). Location(s): [#LOC].	$2,119
5450-0137	Floodlight Whelen/ROM model KR-SB-8PFP2AC-SL-I-TM with external mount tripod telepole. Requires 110V receptacle. Location(s): [#LOC].	$2,587
5450-0138	Light Whelen Pioneer Plus model PFP2AC with Quest brow mount (EA). Location(s): [#LOC].	$2,057
5450-0139	Light Whelen Pioneer Plus model PFP1AC 120V with recess mount. Location(s): [#LOC].	$1,284
5450-0140	Light Whelen Pioneer model PFA1 with pedistal mount. Includes switch in cab (driver and officer side facing lights switched separately). Location(s): [#LOC].	$1,386
5450-0141	Quartz light Fire Research Optimum 150W/12V model OPA230-H15 with recess mount. Includes switch in cab console. Location(s): [#LOC].	$1,446
5450-0142	Light Whelen Pioneer model PCP2 with external bottom raise pole mount (Havis KR-SB-5PCP2-W/2-S-I). Includes switch on light head. Location(s): [#LOC].	$2,180
5450-0143	Light Whelen 12V Pioneer model PFP2 with PBA203 recess mount. Includes switch accessible to driver (side facing lights switched separately). Location: [#LOC].	$1,998
5450-0144	Fire Research Evolution 12V LED scene light model FCA530-V15-SW-H with external push-up pole. Includes switch in cab accessible to driver. Location: [#LOC].	$2,130
5450-0145	Light Whelen Pioneer Plus model PFP1 with recess mount. Includes switch accessible to driver (side facing lights switched separately). Location(s): [#LOC].	$1,240
5450-0151	Light Whelen Pioneer model PFP2 12V with external bottom raise pole mount (ROM model KR-SB-5PFP2-W/2-S-I). Includes switch on light head. Location(s): [#LOC].	$2,180
5450-0153	Light Whelen Pioneer Plus model PFP1 with bail mount. Includes switch in cab accessible to driver (side facing lights switched seperately). Location(s): [#LOC].	$1,240
5450-0154	Fire Research Evolution 12V LED scene light model FCA510E-V15-SW with internal pull-up pole. Includes switch accessible to driver. Location: [#LOC].	$2,130
5450-0155	Fire Research Evolution 12V LED scene light model FCA802-V15 with brow mount (EA). Includes switch accessible to driver (driver and officer side facing lights switched separately). Location: [#LOC].	$1,833
5450-0156	Quartz light Fire Research Evolution 12V LED model FCA300U-V15 with brow mount. Includes switch accessible to driver. Location: center of cab brow.	$1,767
5450-0158	Light Whelen Pioneer model PFP2AC 120V with external bottom raise pole mount (ROM model KR-SB-5PFP2AC-W/2-I). Location(s): driver and officer side back of cab.	$2,157
5450-0161	Light Whelen 12V Pioneer model PCP2 with internal push-up pole mount (Havis KR-SB-4PCP2-S-I). Includes switch on light head. Location(s): [#LOC].	$2,152
5450-0162	Light Whelen Pioneer Plus model PFP2AC 120V with brow mount (EA). Location(s): [#LOC].	$2,057
5450-0163	Light Whelen Pioneer model PFP2AC 120V with internal top raise pole mount (ROM model KR-9PFP2AC-I). Location: [#LOC].	$1,872

5450-0164	Light Whelen Pioneer Plus model PFP2AC 120 volts with permanent mount (ROM model KR-SB-6PFP2AC). Location(s): [#LOC].	$1,923
5450-0165	Light Whelen Pioneer model PFP2AC 120V with external bottom raise pole mount (ROM model KR-SB-5PFP2AC-W/2-I). Location(s): [#LOC].	$2,157
5450-0166	Light Whelen Pioneer Plus model PFP2AC 120V with recess mount. Location(s): [#LOC].	$2,385
5450-0167	Light Whelen Pioneer Plus model PFP2 with Quest brow mount (EA). Includes switch in cab accessible to driver (driver and officer side facing lights switched separately). Location(s): [#LOC].	$2,101
5450-0168	Floodlight Whelen/ROM model KR-SB-8PFP2-SL-I-TM with external mount tripod telepole. Location(s): [#LOC].	$2,587
5450-0169	Quartz light MagnaFire 750W/120V model KR-SB-836-TM-SL-I with external mount tripod telepole. Requires 110V receptacle. Location(s): [#LOC].	$1,410
5450-0170	Fire Research Evolution 12V LED model FCA210-V12 with recess mount. Includes switch in cab accessible to driver. Location(s): [#LOC].	$1,689
5450-0171	Light Whelen Pioneer model PFA1 with PBA103 recess mount. Includes switch accessible to driver. Location: [#LOC].	$1,240
5450-0172	Light Whelen Pioneer Plus model PFP1 12V with vertical bail mount. Includes switch in cab accessible to driver (side facing lights switched seperately). Location(s): [#LOC].	$1,240
5450-0173	Light Whelen Pioneer model PFP1 12V with internal top raise pole mount (ROM model KR-9PFP1-I). Includes switch accessible to driver. Location: [#LOC].	$1,364
5450-0174	Light Whelen Pioneer Plus model PFP1AC 120V with recess mount. Location(s): [#LOC].	$1,284
5450-0175	Light Whelen Pioneer Plus model PFP2AC 120V with brow mount powder coated black (EA). Location(s): [#LOC].	$2,057
5450-0176	Light Whelen Pioneer Plus LED model PFP2 12V with pedestal mount powder coated black. Includes switch in cab (side facing lights switched separately). Location(s): [#LOC].	$2,079
5450-0179	Light Whelen Pioneer model PFA2 with brow mount powder coated FLNA3225E-1 (EA). Includes switch in cab (driver and officer side facing lights switched separately). Location(s): [#LOC].	$1,745
5450-0181	Light Fire Research Spectra 12V LED model SPA510E-Q20-SW with internal pull-up pole. Includes switch accessible to driver. Location(s): [#LOC].	$2,548
5450-0183	Fire Research Spectra 12V LED scene light model SPA530E-Q20-SW-H with external push-up pole. Includes switch in cab accessible to driver. Location: [#LOC].	$2,546
5450-0184	Light Whelen Pioneer model PFP2AC 120V powder coated FLNA3225E-1 with external bottom raise pole mount painted FLNA3225E-1 (ROM model KR-SB-5PFP2AC-W/2-I). Location(s): [#LOC].	$2,250
5450-0185	Light Whelen Pioneer model PFA1 with brow mount (EA). Includes switch in cab (driver and officer side facing lights switched separately). Location(s): [#LOC].	$1,098
5450-0186	Light Whelen Pioneer model PFA1 with vertical bail mount. Includes switch in cab (driver and officer side facing lights switched separately). Location(s): [#LOC].	$1,022
5450-0188	Quartz light MagnaFire 5000 500W/120V model KR-SB-555-W/2-I-SL with (special length) external pole. Location(s): [#LOC].	$1,060
5450-0189	Light Whelen Pioneer Plus model PFP1AC 120V with brow mount (EA). Location(s): [#LOC].	$1,465
5450-0190	Fire Research Spectra 12V LED model SPA260-Q15 with surface mount. Includes switch accessible to driver. Location: [#LOC].	$1,716
5450-0191	Light Fire Research Spectra 120V LED model SPA600-K20-ON-SPA603 with 40" telescopic tripod pole. Location(s): :[#LOC].	$2,938
5450-0192	Light Fire Research Spectra 120V LED model SPA830-K20 with universal brow mount (EA). Location: [#LOC].	$2,225
5450-0193	Light Fire Research Spectra LED 110V model SPA510-K20 with internal pull-up pole. Location(s): [#LOC].	$2,274
5450-0195	Whelen Micro Pioneer Series Super LED Work/Scene Light Model MPR15W with 15 degree recess mount. Includes switch accessible to driver (side facing lights switched seperately). Location: [#LOC].	$673
5450-0196	Brow light brackets (not housing) shall be painted FLNA 10219. This shall include forward, rear and side facing if so equipped.	$160
5450-0197	Light Whelen Pioneer model PFP2 12V powder coated FLNA3225E-1 red with internal top raise pole mount (ROM model KR-9PFP2-S). Includes switch on light head. Location: [#LOC].	$1,963
5450-0198	Light Whelen Pioneer Plus model PFP2 12V with brow mount powder coated FLNA3225E-1 red (EA). Includes switch in cab accessible to driver (driver and officer side facing lights switched separately). Location(s): [#LOC].	$2,191
5450-0199	Light Whelen Pioneer Plus model PFP1 12V with vertical bail mount powder coated FLNA3225E-1 red. Includes switch in cab accessible to driver (side facing lights switched seperately). Location(s): [#LOC].	$1,330
5450-0200	Fire Research Spectra 120V LED scene light model SPA530-K20-SW-H with external push-up pole. Location: [#LOC].	$2,546
5450-0201	Light Fire Research Spectra LED 12V model SPA570-Q20 without pole. Includes switch accessible to driver (driver and officer side facing lights switched seperately). Location(s): [#LOC].	$2,355
5450-0202	Quartz light Fire Research Spectra 120V LED model SPA260-K15 with surface mount. Includes switch accessible to driver (driver and officer side facing lights switched separately). Location: [#LOC].	$2,074
5450-0205	Floodlight Whelen/ROM model KR-SB-8PFP2AC-SL-I-TM with external mount tripod telepole powder coated black. Requires 110V receptacle. Location(s): [#LOC].	$2,587

5450-0206	Light Whelen 150W/120V model KR-7PFPAC2-HD with portable base. Requires 110V receptacle. Location(s): [#LOC].	$2,041
5450-0207	Light Whelen Pioneer Plus LED model PFP2 120V with pedestal mount powder coated black. Location(s): [#LOC].	$2,235
5450-0208	Quartz light Fire Research Spectra 12V LED model SPA802-Q20-02 with brow mount (EA). Includes switch accessible to driver. Location: [#LOC].	$2,225
5450-0209	Quartz light Fire Research Spectra 12V LED model SPA802-Q20-02 powder coated black with brow mount (EA). Includes switch accessible to driver. Location: [#LOC].	$2,271
5450-0210	Light Fire Research Spectra LED 240V model SPA570-J20 without pole. Location(s): [#LOC].	$2,355
5450-0211	Light Fire Research Spectra 240V LED model SPA512-J20-SW with internal thru roof push up pole. Includes switch accessible to driver. Location(s): [#LOC].	$2,712
5450-0212	Quartz light Fire Research Focus 1500W/240V model FCA570-M15 without pole. Location(s): [#LOC].	$1,183
5450-0214	Light Whelen Pioneer Plus model PFP1 12V powder coated black with vertical bail mount. Includes switch in cab accessible to driver (side facing lights switched seperately). Location(s): driver and officer side rear of body up high.	$1,240
5450-0215	Light Whelen 12V Pioneer model PFP2 powder coated black with PBA203 recess mount. Includes switch accessible to driver (side facing lights switched separately). Location: driver and officer side centrally located in center area recessed into roof top compartment raise.	$1,998
5450-0216	Quartz light Fire Research Spectra 120V LED model SPA802-K20-02 with brow mount (EA). Location: [#LOC].	$2,225
5450-0218	Fire Research Evolution 12V LED model FCA210-V12 with recess mount powder coated black. Includes switch in cab accessible to driver. Location(s):[#LOC].	$1,729
5450-0220	Quartz light MagnaFire 750W/120V model KR-1936 with recess mount in diamond plate mounting box. Location(s): [#LOC].	$996
5450-0221	Quartz light MagnaFire 5000 750W/120V model KR-2556 with cab brow mount (EA). Light head to be powder coated black. Location(s): [#LOC].	$836
5450-0222	Quartz light MagnaFire 750W/120V model KR-1336 with low profile mount. Light head to be powder coated black. Location(s): [#LOC]	$946
5450-0223	Quartz light MagnaFire 750W/120V model KR-SB-536-W/2-I with external pole. Light head to be powder coated black. Location(s): [#LOC].	$1,271
5450-0224	Quartz light Fire Research Focus 1000W/120V model FCA600-M10-ON-6F3 with telescopic tripod pole. Location(s): [#LOC].	$1,609
5450-0225	Light Whelen Pioneer model PFP2-P 12V with external bottom raise pole mount (ROM model KR-SB-5PFP2-W/2-S-I). Includes switch accessible to driver (includes a switch on light head). Location(s): [#LOC].	$2,180
5450-0226	Light Whelen Pioneer Plus model PFP1AC 120V with vertical bail mount. Location(s): [#LOC].	$1,409
5450-0227	Light Whelen Pioneer Plus LED model PFP1 12V with PBAPEDD pedestal mount. Includes switch in cab (side facing lights switched separately). Location(s): [#LOC].	$1,481
5450-0228	Light Whelen Pioneer model PFP1 12V with external bottom raise pole mount (Havis KR-SB-5PFP1-W/2-S-I). Includes switch on light head. Location(s): [#LOC].	$1,419
5450-0229	Floodlight Whelen/ROM model KR-SB-8PFP2AC-I-TM with external mount tripod telepole powder coated black. Pole length required shall be determined upon mounted location. Requires 110V receptacle. Location(s): [#LOC].	$2,587
5450-0230	Floodlight Whelen/ROM model KR-SB-8PFP2AC-I-TM with external mount tripod telepole. Pole length required shall be determined upon mounted location. Requires 110V receptacle. Location(s): [#LOC].	$2,587
5450-0231	Light Whelen Pioneer Plus LED model PFP2 12V with PBAPEDD pedestal mount powder coated black housing, mounting brackets applicable shall also be black. Includes switch in cab (side facing lights switched separately). Location(s): [#LOC].	$2,122
5450-0232	Light Whelen Pioneer Plus model PCP2AFSB 120VAC flood/spot with brow mount powder coated black (EA). Location(s): [#LOC].	$2,119
5450-0233	Light Whelen Pioneer Plus model PCP2ASFB 120VAC spot/flood with brow mount powder coated black (EA). Location(s): [#LOC].	$2,119
5450-0234	Light Whelen Pioneer Plus model PCP2AFSB 120VAC flood/spot with pedestal mount powder coated black. Location(s): [#LOC].	$2,115
5450-0235	Light Whelen Pioneer Plus model PCP2ASFB 120VAC spot/flood with pedestal mount powder coated black. Location(s): [#LOC].	$2,115
5450-0236	Light Whelen 150W/120V model KR-7PFPAC2-HD with portable base, powder coated black and Fire Power FP11 male pigtail. Requires 110V receptacle. Location(s): [#LOC].	$2,719
5450-0237	Light Whelen Pioneer Plus 12V model PCP2 flood/spot with pedestal mount. Includes switch in cab (driver and officer side facing lights switched separately). Location(s): [#LOC].	$2,115
5450-0238	Light Whelen Pioneer model PFP2 12V powder coated black with external bottom raise pole mount (ROM model KR-SB-5PFP2-W/2-S-I). Includes switch on light head. Location(s): [#LOC].	$2,180
5450-0239	Light Whelen Pioneer Plus model PCP2 flood/spot with pedestal mount (EA). Includes switch in cab (driver and officer side facing lights switched separately). Location(s): [#LOC].	$2,115
5450-0240	Light Whelen Pioneer Plus model PFP2 with Quest brow mount (EA) powder coated black. Includes switch in cab accessible to driver (driver and officer side facing lights switched separately). Location(s): [#LOC].	$2,101

5460-0000	Light tower Night Scan Powerlite NS3.0-3000M with four 750 watt 115 volt MagnaFire quartz light heads. Requires air brakes or air system and auxiliary air tank. Tower to be located [#LOC].	$20,347
5460-0001	Night Scan Powerlite NS3.0-4500M light tower with six 750 watt 115 volt MagnaFire quartz light heads. Control to be located next to the breaker box. Requires air brakes or air system and auxiliary air tank. Tower to be located [#LOC].	$22,175
5460-0002	Night Scan Powerlite NS4.5-3000M light tower with four 750 watt 115 volt MagnaFire quartz light heads. Control to be located next to the breaker box. Requires air brakes or air system and auxiliary air tank. Tower to be located [#LOC].	$20,917
5460-0003	Night Scan Powerlite NS4.5-4500M light tower with six 750 watt 115 volt MagnaFire quartz light heads. Control to be located next to the breaker box. Requires air brakes or air system and auxiliary air tank. Tower to be located [#LOC].	$22,530
5460-0004	Night Scan Powerlite NS4.5-6000A light tower with four 1500 watt 220 volt quartz light heads. Control to be located next to the breaker box. Requires air brakes or air system and auxiliary air tank. Tower to be located [#LOC].	$19,728
5460-0005	Night Scan Powerlite NS4.5-6000OPT light tower with four 1500 watt 230 volt Optimum quartz light heads. Control to be located next to the breaker box. Requires air brakes or air system and auxiliary air tank. Tower to be located [#LOC].	$19,463
5460-0006	Night Scan Powerlite NS4.5-9000OPT light tower with six 1500 watt 230 volt Optimum quartz light heads. Control to be located next to the breaker box. Requires air brakes or air system and auxiliary air tank. Tower to be located [#LOC].	$24,361
5460-0010	Will-Burt Night Scan extension harness. Required when tower is installed on custom cab roof or more than 20' from controller location.	$1,042
5460-0011	Night Scan Chief NS1.8-3000A light tower with two 1500 watt 230 volt quartz light heads. Control to be located next to the breaker box. Tower to be located [#LOC].	$11,994
5460-0013	Command Light light tower model CL 605. Includes (6) 500 watt quartz halogen lights and a green strobe. Location: [#LOC].	$19,042
5460-0014	Command Light light tower model CL 610. Includes (6) 650 watt quartz halogen lights and a green strobe. Location: [#LOC].	$17,059
5460-0019	Command Light light tower model CL 611. Includes (6) 1000 watt quartz halogen lights and a green strobe. Location: [#LOC].	$18,386
5460-0020	Night Scan Powerlite NS3.0-4500 Profiler light tower with three (3) 1500 watt, 230 volt Optimum Fire Research quartz light heads. Control to be located next to the breaker box. Requires air brakes or air system and an auxiliary air tank. Location: [#LOC].	$18,943
5460-0021	Command Light light tower model CL 615. Includes (6) 1500 watt quartz halogen lights and a green strobe. Location: [#LOC].	$18,386
5460-0022	Command Light Knight tower model KL450. Includes (6) 500 watt quartz halogen lights and a green strobe. Location: [#LOC].	$12,541
5460-0024	Command Light light tower model SL429-RT. Includes (2) 1500 watt quartz halogen lights. Control to be located next to the breaker box. Location: [#LOC].	$8,088
5460-0025	Night Scan Powerlite NS4.5-5400M light tower with six 900 watt 230 volt MagnaFire quartz light heads. Control to be located next to the breaker box. Requires air brakes or air system and auxiliary air tank. Tower to be located [#LOC].	$21,153
5460-0026	Night Scan Chief NS1.8-3000A light tower with two 1500 watt 230 volt quartz light heads. Control to be located next to the breaker box. Tower to be located [#LOC].	$11,994
5460-0027	Command Light tower option, back lighting.	$1,879
5460-0030	Command Light light tower model KL475HS. Includes (6) 750 watt Magnafire quartz halogen lights and a green strobe. Location: [#LOC].	$20,694
5460-0031	Night Scan Chief NS1.8-3000M light tower with four 750 watt 115 volt MagnaFire quartz light heads. Control to be located next to the breaker box. Tower to be located [#LOC].	$13,182
5460-0032	Command Light light tower model KL475HS. Includes (6) 750 watt Magnafire quartz halogen lights and a red strobe. Location: [#LOC].	$20,694
5460-0033	Night Scan Powerlite NS4.5-3600M light tower with four 900 watt 230 volt MagnaFire quartz light heads. Control to be located next to the breaker box. Requires air brakes or air system and auxiliary air tank. Tower to be located [#LOC].	$18,681
5460-0034	Command Light light tower model CL 615. Includes (4) 1500 watt quartz halogen lights, (2) 1000 watt Metal Halide light heads, and a green strobe. Locate [#LOC].	$19,446
5460-0036	Night Scan Chief NS2.3-3000M light tower with four 750 watt 115 volt MagnaFire quartz light heads. Control to be located next to the breaker box. Tower to be located [#LOC].	$12,393
5460-0038	Command Light light tower model CL 615. Includes (6) 1000 watt quartz halogen lights and a green strobe. Location: [#LOC].	$18,386
5460-0039	Will-Burt 5.4-17IWM Vertical Light Mast. Includes (4) 1500W Optimum light heads. Locate ceneterd (as applicable) in the forward dunnage pan area over LT/RT. Mast will run into transverse area. Controller to be in L3 forward area for use by the pump operator.	$19,760
5460-0040	Night Scan Powerlite NS4.5-6000OPT light tower with four 1500 watt 230 volt Optimum quartz light heads. Light heads and base covers painted job color. Control to be located next to the breaker box. Requires air brakes or air system and auxiliary air tank. Tower to be located [#LOC].	$22,352

5460-0042	Will-Burt 5.4-17 Vertical Light Mast. Includes (6) 1500W Optimum light heads. Locate ceneterd (as applicable) in the forward dunnage pan area over [#LOC]. Mast will run into transverse area. Controls will be located next to breaker box.	$19,760
5460-0043	Night Scan Powerlite NS3.0-6000OPT light tower with four 1500 watt 230 volt Optimum quartz light heads. Control to be located next to the breaker box. Requires air brakes or air system and auxiliary air tank. Tower to be located [#LOC].	$22,175
5460-0045	Night Scan Powerlite NS4.5-3000M light tower with four 750 watt 115 volt MagnaFire quartz light heads. Control to be located next to the breaker box. Requires air brakes or air system and auxiliary air tank. Tower to be located [#LOC].	$20,562
5460-0046	Command Light light tower model KL450. Includes black powder coat finish with (6) 500 watt quartz halogen lights and a green strobe. Location: [#LOC].	$13,714
5460-0047	Night Scan Chief NS2.3-6000OPT light tower with four 1500 watt 230 volt FRC Optimum quartz light heads. Control to be located next to the breaker box. Requires air brakes or air system and auxiliary air tank. Tower to be located [#LOC].	$12,402
5460-0048	Command Light light tower model CL 615 with FRC Optimum lightheads. Includes (6) 1500 watt quartz halogen lights and a amber strobe. Location: [#LOC].	$22,875
5460-0049	Wireless remote control for Command Light tower. Includes splitter box for use with standard controller. Wireless control located at final inspection.	$4,228
5460-0050	Night Scan Powerlite NS 3.0-3600M light tower with four 900 watt 230 volt MagnaFire quartz light heads. Control to be located next to the breaker box. Requires air brakes or air system and auxiliary air tank. Tower to be located [#LOC].	$18,213
5460-0053	Command Light light tower model CL602A with Whelen PFP2AC lightheads. Includes (6) 150 watt LED lights and a amber strobe. Location: [#LOC].	$30,297
5460-0059	Command Light Knight tower model KL465. Includes (6) 650 watt quartz halogen lights. Location: [#LOC].	$12,541
5460-0060	Night Scan Powerlite NS3.0-4000OPT light tower with four 1000 watt 230 volt Optimum quartz light heads and D-TECH II safety system. Control to be located next to the breaker box. Requires air brakes or air system and auxiliary air tank. Tower to be located [#LOC].	$26,109
5460-0062	Light tower disconnect. Provided junction box for 110V wiring and weather proof connector for control wires.	$332
5460-0064	Night Scan Chief NS1.8-6000OPT light tower with four 1500 watt 230 volt FRC Optimum quartz light heads. Control to be located next to the breaker box. Requires air brakes or air system and auxiliary air tank. Tower to be located [#LOC].	$12,886
5460-0065	Night Scan Chief 1.8-3600M light tower with four 900 watt 230 volt quartz light heads. Control to be located next to the breaker box. Tower to be located [#LOC].	$14,428
5460-0066	Command Light light tower model CL602D with Whelen PFP2 12V lightheads. Includes (4) 150 watt LED lights and a amber strobe. Location: [#LOC].	$25,121
5460-0067	Night Scan Chief NS2.3-600LED Whelen light tower with (4) 150 watt 12V Whelen Pioneer PFP2 LED light heads. Control to be located next to the breaker box if equipped or the forward wall of L1 if unit has no breaker box. Tower to be located [#LOC].	$15,848
5460-0069	Command Light Knight tower model KL450. Includes (6) 500 watt quartz halogen lights and a amber strobe. Location: [#LOC].	$12,541
5460-0070	Night Scan Chief NS1.8-3000-4-MGN-110v light tower with four 750 watt 115 volt MagnaFire quartz light heads. Control to be located next to the breaker box. Tower to be located [#LOC].	$10,214
5460-0071	Night Scan Powerlite NS3.0-600WHL light tower with (4) 150 watt 120 volt Whelen Pioneer PFP2AC LED light heads. Control to be located next to the breaker box. Requires air brakes or air system and auxiliary air tank. Ahead of vista location requires riser. Tower to be located [#LOC].	$27,854
5460-0072	Night Scan Powerlite NS3.0-900WHL light tower with (6) 150 watt 120 volt Whelen Pioneer PFP2AC LED light heads. Control to be located next to the breaker box. Requires air brakes or air system and auxiliary air tank. Ahead of vista location requires riser. Tower to be located [#LOC].	$32,948
5460-0073	Night Scan Chief NS1.8-600WHL 120V Whelen light tower with (4) 150 watt 120 volt Whelen Pioneer PFP2AC LED light heads. Control to be located next to the breaker box. Tower to be located [#LOC].	$23,365
5460-0074	Night Scan Chief NS1.8-600 Whelen light tower with (4) 150 watt 12V Whelen Pioneer PFP2 LED light heads. Control to be located next to the breaker box. Tower to be located [#LOC].	$15,982
5460-0075	Night Scan Powerlite NS4.5-900WHL light tower with (6) 150 watt 120 volt Whelen Pioneer PFP2AC LED light heads. Control to be located next to the breaker box. Requires air brakes or air system and auxiliary air tank. Ahead of vista location requires riser. Tower to be located [#LOC].	$33,719
5460-0076	Night Scan Powerlite NS4.5-600WHL light tower with (4) 150 watt 120 volt Whelen Pioneer PFP2AC LED light heads. Control to be located next to the breaker box. Requires air brakes or air system and auxiliary air tank. Ahead of vista location requires riser. Tower to be located [#LOC].	$28,546
5460-0077	Night Scan Chief NS2.3-600LED Whelen light tower with (4) 150 watt 110V Whelen Pioneer PFP2AC LED light heads. Control to be located next to the breaker box. Tower to be located [#LOC].	$23,597
5460-0078	Night Scan Chief NS1.8-920SPA 120V FRC light tower with (4) 230 watt 120 volt FRC Spectra LED light heads. Control to be located next to the breaker box. Tower to be located [#LOC].	$21,111
5460-0079	Night Scan Chief NS1.8-920SPA 12V FRC light tower with (4) 230 watt 12 volt FRC Spectra LED light heads. Control to be located next to the breaker box. Tower to be located [#LOC].	$21,111
5460-0080	Night Scan Chief NS2.3-920SPA 12V FRC light tower with (4) 230 watt 12 volt FRC Spectra LED light heads. Control to be located next to the breaker box. Tower to be located [#LOC].	$21,264

5460-0081	Night Scan Chief NS2.3-920SPA 120V FRC light tower with (4) 230 watt 120 volt FRC Spectra LED light heads. Control to be located next to the breaker box. Tower to be located [#LOC].	$21,264
5460-0082	Night Scan Powerlite NS3.0-920SPA light tower with (4) 230 watt 120 volt FRC Spectra LED light heads. Control to be located next to the breaker box. Requires air brakes or air system and auxiliary air tank. Ahead of vista location requires riser. Tower to be located [#LOC].	$33,076
5460-0083	Night Scan Powerlite NS3.0-1380SPA light tower with (6) 230 watt 120 volt FRC Spectra LED light heads. Control to be located next to the breaker box. Requires air brakes or air system and auxiliary air tank. Ahead of vista location requires riser. Tower to be located [#LOC].	$38,000
5460-0085	Night Scan Powerlite NS4.5-1380SPA light tower with (6) 230 watt 120 volt FRC Spectra LED light heads. Control to be located next to the breaker box. Requires air brakes or air system and auxiliary air tank. Ahead of vista location requires riser. Tower to be located [#LOC].	$38,257
5460-0086	Command Light light tower model CL 607. Includes (6) 750 watt ROM Magnafire quartz halogen lights and a green strobe. Location: [#LOC].	$23,021
5460-0087	Command Light light tower model CL 607. Includes (6) 750 watt FRC Optimum quartz halogen lights and a green strobe. Location: [#LOC].	$23,021
5460-0088	Command Light light tower model CL602A with Whelen PFP2AC lightheads. Includes (4) 150 watt LED lights. Location: [#LOC].	$29,255
5460-0089	Command Light light tower model CL602A with FRC 120V Spectra lightheads. Includes (4) 220 watt LED lights. Location: [#LOC].	$29,255
5460-0090	Command Light light tower model CL602A with FRC 120V Spectra lightheads. Includes (6) 220 watt LED lights. Location: [#LOC].	$30,297
5460-0091	Command Light light tower model CL602D with FRC Spectra 12V lightheads. Includes (4) 220 watt LED lights. Location: [#LOC].	$25,121
5460-0092	Command Light light tower model KL475OPT. Includes (6) 750 watt FRC Optimum quartz halogen lights. Location: [#LOC].	$20,707
5460-0093	Command Light light tower model KL415A. Includes (6) 220 watt 120V FRC Spectra LED lights. Control to be located adjacent to breaker box. Location: [#LOC].	$28,161
5460-0094	Command Light light tower model KL415A. Includes (6) 150 watt 120V Whelen Pioneer PFP2 LED lights. Control to be located adjacent to breaker box. Location: [#LOC].	$28,161
5460-0095	Command Light light tower model KL415A. Includes (4) 220 watt 120V FRC Spectra LED lights. Control to be located adjacent to breaker box. Location: [#LOC].	$23,022
5460-0096	Command Light light tower model KL415A. Includes (4) 150 watt 120V Whelen Pioneer PFP2 LED lights. Control to be located adjacent to breaker box. Location: [#LOC].	$23,022
5460-0097	Command Light light tower model KL415D. Includes (4) 220 watt 12V FRC Spectra LED lights. Control to be located adjacent to breaker box. Location: [#LOC].	$21,737
5460-0098	Command Light light tower model KL415D. Includes (4) 150 watt 12V Whelen Pioneer PFP2 LED lights. Control to be located adjacent to breaker box (unless otherwise specified). Location: [#LOC].	$21,737
5460-0100	Command Light light tower model SL422D. Includes (2) 150 watt Whelen 12V Pioneer lights. Control to be located next to the breaker box. Location: [#LOC].	$11,195
5460-0101	Command Light light tower model CL602A-2MH. Includes (4) 110V 220 watt FRC Spectra LED lights, (2) 230V 1000W metal halide lights and a green strobe. Location: [#LOC].	$31,825
5460-0102	Night Scan Chief NS1.8-3000OPT light tower with four 750 watt FRC Optimum quartz light heads. Control to be located next to the breaker box. Tower to be located on [#LOC].	$12,675
5460-0103	Night Scan Powerlite NS3.0-900WHL light tower with (6) 150 watt 120 volt Whelen Pioneer PFP2AC LED light heads. Control to be located next to the breaker box. Requires air brakes or air system and auxiliary air tank. Tower to be located rearward on flat roof (non vista) and mounted side to side and hinged to driver. Placement to allow 45 degree shield to be placed in normal vista rise locations to allow cab to appear to have vista roof.	$32,948
5460-0106	Strobe light for Command Light tower. Color: [#COL].	$322
5470-0000	Receptacle twist lock 15A/110V 3 wire NEMA L5-15 with cover plate. Location: [#LOC].	$283
5470-0001	Receptacle twist lock 20A/110V 3 wire NEMA L5-20 with cover plate. Location: [#LOC].	$295
5470-0002	Receptacle twist lock 30A/110V 3 wire NEMA L5-30 with cover plate. Location: [#LOC].	$319
5470-0003	Receptacle household 15A/110V duplex 3-prong NEMA 5-15 with cover plate. Location: [#LOC].	$258
5470-0004	Receptacle household 20A/110V duplex 3-prong NEMA 5-20 with cover plate interior mounted wired to inlet receptacle. Location: [#LOC].	$278
5470-0005	Receptacle household 15A/110V Daniel Woodhead duplex 3 wire NEMA 5-15 w/Daniel Woodhead cover plate. Location: [#LOC]	$514
5470-0006	Receptacle twist lock 15A/110V Daniel Woodhead 3 wire NEMA L5-15 w/Daniel Woodhead cover plate. Location: [#LOC]	$462
5470-0007	Receptacle twist lock 15A/220V Daniel Woodhead 3 wire NEMA L6-15 w/Daniel Woodhead cover plate. Location: [#LOC]	$585
5470-0008	Receptacle twist lock 20A/110V Daniel Woodhead 3 wire NEMA L5-20 w/Daniel Woodhead cover plate. Location: [#LOC].	$477
5470-0009	Receptacle twist lock 20A/220V Daniel Woodhead 3 wire NEMA L6-20 w/Daniel Woodhead cover plate. Location: [#LOC]	$630
5470-0010	Receptacle twist lock 20A 110V/220V Daniel Woodhead 4 wire NEMA L14-20 w/Daniel Woodhead cover plate. Location: [#LOC]	$653
5470-0011	Receptacle twist lock 15A/220V 3 wire NEMA L6-15 with cover plate. Location: [#LOC]	$412

5470-0012	Receptacle twist lock 20A/220V 3 wire NEMA L6-20 with cover plate. Location: [#LOC].	$412
5470-0013	Receptacle twist lock 20A 110V/220V 4 wire NEMA L14-20 with cover plate. Location: [#LOC].	$560
5470-0014	Receptacle twist lock 30A/220V 3 wire NEMA L6-30 with cover plate. Location: [#LOC].	$560
5470-0015	Receptacle twist lock 30A 110V/220V 4 wire NEMA L14-30 with cover plate. Location: [#LOC]	$556
5470-0016	Receptacle shoreline 30A/110V with auto transfer switch. The receptacle shall be located [#LOC].	$950
5470-0017	Receptacle household 20A/110V duplex 3-prong NEMA 5-20 with cover plate. Location: [#LOC].	$269
5470-0018	Receptacle shoreline 50A/220V with auto transfer switch. The receptacle shall be located [#LOC].	$959
5470-0019	Receptacle FirePower 20A/110V model FP-11 with cover plate. Location: [#LOC].	$326
5470-0020	Receptacle 12V military with A pin Positive, B pin Negative, C pin Blank. Location: [#LOC]	$223
5470-0021	12 volt power point wired battery hot. Location [#LOC]	$54
5470-0023	Fuse 15A in B1 compt for 12V power point receptacle.	$85
5470-0024	Receptacle 15A/110V duplex with (1) 3-prong NEMA 5-15 and (1) twist lock NEMA L5-15 with cover plate. Location: [#LOC].	$301
5470-0025	Receptacle household 30A/110V 3-prong NEMA 5-30 with cover plate. Location: [#LOC]	$307
5470-0026	Receptacle household 15A/110V duplex 3-prong NEMA 5-15 with cover plate interior mounted wired to inlet receptacle. Location: [#LOC].	$258
5470-0027	Household switch with weaterproof cover located near receptacle at [#LOC]. Switch to operate single leg of this duplex receptacle.	$465
5470-0028	Receptacle household 20A/110V Daniel Woodhead duplex 3 wire NEMA 5-20 w/Daniel Woodhead cover plate. Location: [#LOC].	$528
5470-0029	Receptacle Hubbell twist lock 20A 110V/250V 3 wire NON-NEMA with cover plate. Location: [#LOC].	$352
5470-0030	Receptacle twist lock 15A/110V 3 wire NEMA L5-15 with yellow Daniel Woodhead cover plate. Location: [#LOC].	$345
5470-0031	Receptacle twist lock 15A/110V duplex 3 wire NEMA L5-15 with yellow Daniel Woodhead cover plate. Location: [#LOC]. Top duplex will be hooked to toogle switch next to it.	$585
5470-0032	Receptacle 12V Marinco model 2018BR with model 2018MB cover wired battery hot. Includes model 2018BP male connector. Location: [#LOC].	$390
5470-0034	Receptacle shoreline 50A/220V. The receptacle shall be located [#LOC]. No additional breaker box is included in this code.	$257
5470-0036	9 outlet Stanley model 31610 household 15A/110V power strip wired to inlet receptacle. Location: [#LOC].	$167
5470-0039	Receptacle NON-NEMA locking 20A 120V/250V Daniel Woodhead model 67W08 w/Daniel Woodhead cover plate. Location: [#LOC].	$653
5470-0040	Receptacle twist lock 50A/220V 3 wire NEMA L6-50 with cover plate. Location: [#LOC].	$682
5470-0041	Receptacle household 15A/110V duplex 3-prong NEMA 5-15 with cover plate interior mounted wired to inlet receptacle. Location: R1 forward wall 24" up.	$258
5470-0042	Auto-Eject receptacle inlet 30 amp 120 volt with auto transfer switch. The receptacle shall be located [#LOC] and with a [#COL] cover.	$1,382
5470-0047	6 outlet household 15A/110V power strip wired to inlet receptacle. Location: [#LOC].	$193
5470-0048	Service 30A/220V 4 wire with junction box. Location: [#LOC].	$434
5470-0051	6 outlet household 20A/110V power strip wired to inlet receptacle. Location: [#LOC].	$193
5470-0053	Receptacle inlet 110 VAC, L5-30 Amp twist lock with a [#COL] cover. Location: [#LOC].	$259
5470-0054	Receptacle household 15A/110V duplex 3-prong NEMA 5-15 with cover plate interior mounted wired to generator (not wired to inlet/shoreline). Location: [#LOC].	$258
5470-0055	Receptacle household 15A/110V duplex 3-prong NEMA 5-15 with cover plate. This receptacle shall be GFCI protected and have a push button reset on the receptacle. Location: [#LOC].	$280
5470-0057	Receptacle household 20A/110V duplex 3-prong NEMA 5-20 with cover plate interior mounted wired to generator (not wired to inlet/shoreline). Location: [#LOC].	$269
5500-0004	Code3 V-Con #3692 siren recessed mounted.	$684
5500-0005	Federal Signal electronic EQ2B-EF siren. Includes 200 watt speaker with square "E-ONE" grille. Speaker location: [#LOC].	$3,449
5500-0006	Federal electronic e-Q2B siren. Includes "Q" grille. Speaker location: [#LOC].	$3,910
5500-0007	Federal MS4000 siren recessed mounted.	$777
5500-0009	Federal PA300 electronic siren recessed mounted.	$642
5500-0010	Federal Q2B siren - flush mounted in bumper. Location: [#LOC].	$2,749
5500-0011	Federal Q2B siren - Pedestal mounted on bumper. Location: [#LOC].	$2,475
5500-0012	Prewire for Federal Q2B mechanincal siren.	$256
5500-0015	Whelen model 295SLSA1 siren with microphone (replaced 295HFSA1).	$852
5500-0016	Code 3 V-Con #3672 siren recessed mounted.	$684
5500-0017	Whelen model 295HFSM1 siren with mechanical siren tone and microphone. N/A in California.	$937
5500-0019	Code 3 #3997 siren. Requires (1) 200 watt or (2) 100 watt speakers.	$1,574
5500-0020	Federal PA4000 siren recessed mounted.	$686
5500-0022	Federal PA300 siren mounted on electrical access panel between the driver and officer front seats.	$642
5500-0023	Unitrol model UTM1 siren with option to disable Hi/Low feature (UOP09). Route radio re-broadcast cable to officer side overhead for OCFA radio installation.	$685
5500-0027	Signal Vehicle Products model SS741MG siren recessed mounted.	$541
5500-0028	Integrated Siren System with dual control heads, separate PA controls with remote mircrophone and volume switch.	$786

5500-0030	Code 3 #3997R siren. Requires (1) 200 watt or (2) 100 watt speakers.	$1,574
5500-0031	Whelen model 295HFSA7 siren with microphone.	$1,333
5500-0032	Federal / Unitrol #U480K-4 siren.	$1,413
5500-0034	Federal Rumbler secondary siren. Includes amp, timer, and two speakers mounted under vehicle. Requires control switch.	$1,124
5500-0036	Whelen model 295HFSC9 siren with microphone. N/A in California.	$1,071
5500-0037	Federal PA300 siren recessed mounted. Microphone to be removed and a plug is to be installed in the wiring hole.	$642
5500-0038	Federal / Unitrol #UTM4 siren.	$1,429
5500-0040	Powercall DX5200 siren control. For use with (1) 200 watt speaker or up to (2) 100W speakers.	$856
5500-0041	Federal electronic Q2B-EF siren. Includes two ES100 speakers with square "E-ONE" grills. Speaker location: [#LOC].	$3,569
5500-0044	Whelen model 295HFSA7 siren with microphone. Microphone to be removed (shipped loose) and a plug is to be installed in the wiring hole.	$1,333
5500-0045	Whelen model 295SLSC1 siren with plug-in microphone. N/A in California.	$852
5500-0048	Federal PA300 100W siren recessed mounted.	$602
5500-0049	Whelen Howler secondary siren. Includes amp, timer, and two speakers mounted under vehicle.	$1,137
5500-0050	Integrated Siren System with dual control heads. No microphone or volume control.	$786
5500-0051	Federal PA300R siren with single control. PA control and volume switch located on electrical access panel.	$772
5500-0052	Federal PA640 electronic siren recessed mounted.	$642
5500-0054	Federal / Unitrol #UTM1 siren.	$1,031
5500-0059	Whelen model 295SL100 siren with microphone (replaced 295HF100).	$805
5500-0060	Whelen Howler secondary siren. Includes amp, timer, and two speakers mounted under gravelshield.	$1,137
5500-0062	Screaming Eagle flange mount siren in bumper. Location: [#LOC].	$2,766
5500-0063	Federal electronic Q2B-EF siren. Includes two ES100 speakers. Speaker location: [#LOC].	$3,569
5500-0066	Whelen model 295SLSA1 siren without microphone.	$852
5500-0067	Whelen model 295SLSC1 siren without microphone. N/A in California.	$852
5510-0002	Speaker Federal BP200 mounted through bumper. Location: [#LOC].	$1,075
5510-0003	Speaker Federal CP100S pedestal mounted. Location: [#LOC].	$702
5510-0006	Speaker Federal ES100-MSBMT. Location: [#LOC].	$416
5510-0007	Speaker Cast Products SA2401 100W thru bumper. Location: [#LOC].	$469
5510-0008	Speaker Cast Products SA3501 100W through bumper. Location: [#LOC].	$519
5510-0009	Federal TS100-N speaker mounted on pump panel.	$424
5510-0012	Speaker Federal TS100 through bumper. Location: [#LOC].	$498
5510-0013	Speaker Federal Dynamax MS100-EF thru bumper. Location: [#LOC].	$498
5510-0016	Code 3 PB100C electronic siren speaker recessed in front bumper. Location: [#LOC].	$488
5510-0017	Speaker Cast Products SA2403 100W thru bumper. Location: [#LOC].	$469
5510-0018	Whelen SA122FMP electronic siren speaker recessed in front bumper. Location: [#LOC].	$515
5510-0019	University Sound speaker model MIS8C with seperate on / off switch. Locate on driver side upper module area with wire terminating in the center overhead console.	$314
5510-0021	Speaker Federal TS100-N mounted on driver side front compartment face.	$424
5510-0023	Speaker Atkinson Dynamics (Federal) mounted on pump panel.	$572
5510-0026	Code 3 FM100C electronic siren speaker recessed in front bumper. Location: [#LOC].	$562
5510-0027	Speaker volume control on pump panel for pump panel mtd speaker. Locate next to speaker. Includes 16-18 gauge audio cable run from volume control to center overhead area, leave a 30" coil of wire.	$404
5510-0029	Speaker, Federal Signal Dynamax ES100 with "E-ONE" grille through bumper. Location: [#LOC].	$498
5510-0031	Whelen SA314P electronic siren speaker recessed in front bumper with polished trim ring. Location: [#LOC].	$695
5510-0038	Speaker Federal Dynamax ES100 with "E-ONE" grille. Located Driver side recess behind pump panel.	$541
5510-0041	Speaker, Federal Signal Dynamax ES100. Location: [#LOC].	$498
5510-0042	Speaker Atkinson Dynamics (Federal) model AD-SF-25 flush mounted with volume controls. Location: [#LOC].	$631
5510-0045	Speaker, Federal Signal Dynamax ES100 with "E-ONE" grille. Location: [#LOC].	$498
5550-0006	Whelen LED 6/2/2 lower level warning light package. Includes (6) 600 series (2) 400 series and (2) 500 series light heads w/weatherproof connectors. Locate side facing lights: [#LOC].	$2,957
5550-0007	Whelen LED 8/2 lower level warning light package. Includes (8) 600 series and (2) 500 series light heads w/weatherproof connectors. Locate side facing lights: [#LOC].	$3,186
5550-0008	Whelen strobe/LED 6/2/2 lower level warning light package. Includes (6) 600 series strobes, (2) 400 series strobes and (2) 500 series LED light heads w/weatherproof connectors and required power supplies. Locate side facing lights: [#LOC].	$2,854
5550-0010	Whelen 600 series LED lower level warning light package. Includes (10) LED light heads w/weatherproof connectors. Locate side facing lights: [#LOC].	$3,504
5550-0011	Whelen 600 series strobe lower level warning light package. Includes (8) strobe lights w/weatherproof connectors and required power supplies. Locate per NFPA 1901.	$2,477

5550-0012	Whelen 600 series strobe lower level warning light package. Includes (10) strobe lights w/weatherproof connectors and required power supplies. Locate side facing lights: [#LOC].	$3,298
5550-0013	Federal Signal strobe/halogen lower level warning light package. Includes (8) strobe, (2) GH1F halogen lts and required power supplies. Locate side facing lights: [#LOC].	$2,782
5550-0014	Federal Signal GS5 strobe lower level warning light package. Includes (10) Lights and required power supplies. Locate side facing lights: [#LOC].	$3,175
5550-0021	Federal Signal GL5 LED lower level warning light package. Includes Ten (10) GL5-R lights. Locate side facing lights: [#LOC].	$2,541
5550-0028	Code3 strobe/halogen 6/4 lower level warning light package. Includes (6) 40 series strobe lights and (4) OL135 halogen lights and required power supplies. Locate side facing lights: [#LOC].	$4,298
5550-0029	Code3 halogen 4/6 lower level warning light package. Includes Includes (6) 41 series and (4) OL135 halogen lights. Locate side facing lights: [#LOC].	$2,159
5550-0030	Code3 model 65 red LED lower level warning light package. Includes (10) LED lights. Locate side facing lights: [#LOC].	$3,703
5550-0049	Code3 LED 6/2/2 lower level warning light package. Includes (8) model 65 red LED and (2) LXEX1F-R LED lights. Includes chrome bezels where applicable. Locate side facing lights: [#LOC].	$2,930
5550-0052	Flash rate for Federal LED lower level warning lights to be set at pattern 2, alternating triple flash (102 TFPM).	$82
5550-0053	Flash rate for Federal LED lower level warning lights to be set at pattern 8, alternating single flash (150 FPM).	$82
5550-0054	Whelen 600 series Super LED lower level warning light package. Includes (10) red LED light heads w/chrome flanges. Locate side facing lights: [#LOC].	$2,781
5550-0055	Federal Signal QuadraFlare LED lower level warning light package. Includes (10) QL64XF-R LED light heads with bezels. Locate side facing lights: [#LOC].	$2,326
5550-0059	Whelen Super LED lower level warning light package. Includes (8) red 600 LED light heads and (2) red 500 LED light heads w/chrome flanges. Locate side facing lights: [#LOC].	$2,628
5550-0060	Code3 LED 6/2/2 lower level warning light package. Includes (4) 65BZR, (2) 65FR, (2) 85BZR low on rear and (2) LXEX1F-R. Locate side facing lights: [#LOC]	$3,244
5550-0066	Tomar lower level warning light package. Includes RECT-46 LED in front quad bezels (to alternate flash, drv side blue, ofc side red), RECT-79SS on ends of bumper gravel shield (clear frt, red rear) in angled forward bezel, RECT-37SS on side of cab down low just ahead of rear cab doors and in rear ww offset forward (red frt/ blue rear), RECT-25 LED (red) in rubrail side facing at rear of body, RECT-46 LED (drv side blue / ofc side red) rear facing down low, three 780-1228-WP power supplies, 930DM-LED-LB flasher for frt lts, and chrome flanges on applicable lts.	$6,939
5550-0067	Flash rate for Federal QuadraFlare LED lower level warning lights to be set at pattern 4, alternating quad flash (75 QFPM).	$82
5550-0069	Flash rate for Federal QuadraFlare LED lower level warning lights to be set at pattern 5, alternating double flash (150 DFPM).	$82
5550-0070	Whelen LED lower level NFPA warning light package (includes upper rear compartment face mounted lights that are wired into lower level switching). Includes (14) lights (8/6).	$4,594
5550-0072	Whelen 600 series Super LED lower level warning light package. Includes (8) red/amber and (2) red LED light heads w/chrome flanges. Locate side facing lights: [#LOC].	$3,136
5550-0073	Whelen Super LED lower level warning light package. Includes (8) 600 Super LED light heads and (2) 900 Super LED light heads w/chrome flanges where applicable. Locate side facing lights: [#LOC].	$3,061
5550-0074	Whelen Super LED 4/2/2/2 lower level warning light package. Includes (4) 600, (2) 900 split, (2)700 split and (2) 500 LED light heads w/weatherproof connectors. Locate side facing lights: at forward most position (900), centered in rear wheelwell (700), and in rubrail (500) side facing at rear of body.	$4,047
5550-0077	Federal Signal QuadraFlare LED upper level side warning light package. Includes (4) QL64XF red LED light heads with bezels. Located 2 side facing on Driver and Officer side upper rear corners.	$1,120
5550-0083	Federal Signal QuadraFlare LED upper level rear warning light package. Includes (2) QL64XF red LED light heads with bezels. Located (1) driver and (1) officer upper rear corners.	$561
5550-0086	Whelen 900 series Super LED upper level side warning light package. Includes (2) red Whelen 900 Super LED model 90RR5FRR lights. Includes weatherproof connectors. Located (1) on the driver and (1) on the officer side upper rear side corners.	$1,026
5550-0088	Whelen 900 series Super LED upper level rear panel warning light package. Includes (2) red Whelen 900 Super LEDs lights, model 90RR5FRR. Includes weatherproof connectors. Located (1) driver and (1) officer upper rear corners.	$1,026
5550-0091	Whelen strobe/LED 6/2/2 lower level warning light package. Includes (6) 600 series strobes, (2) 700 series strobes and (2) 500 series LED light heads w/weatherproof connectors and required power supplies. Locate side facing lights: [#LOC].	$2,917
5550-0092	Whelen strobe/LED 6/2/2 lower level warning light package. Includes (6) 600 series super LED, (2) 700 series split lens strobes and (2) 500 series super LED light heads w/weatherproof connectors and required power supplies. Locate side facing lights: [#LOC]	$3,327
5550-0093	Whelen Super LED lower level warning light package. Includes (6) 600 LED red light heads, (2) 400 LED red light heads and (2) 500 red LED light heads w/chrome flanges. Locate side facing lights: [#LOC]	$2,507
5550-0094	Federal Signal strobe lower level warning light package. Includes (8) GS5 strobes and (2) GS2 strobes lts. All lenses to be blue except mid-body which are red. Locate side facing lights: [#LOC]	$3,175

5550-0095	Whelen Super LED lower level warning light package. Includes (7) 600 red LED light heads, and (3) 600 blue LED light head w/chrome flanges. Locate side facing lights: [#LOC]	$2,781
5550-0096	Weldon Diamondback V46 LED lower level warning light package. Includes (10) red LED light heads w/chrome flanges. Locate side facing lights: [#LOC].	$2,824
5550-0097	Whelen 400 series linear Super LED lower level warning light package. Includes (10) red LED light heads w/chrome flanges. Locate side facing lights: [#LOC].	$4,254
5550-0099	Whelen Super LED lower level warning light package. Includes (4) red 600 LED light heads, (4) red/clear 600 split LED light heads and (2) red 500 LED light heads w/chrome flanges. Locate side facing lights: [#LOC].	$3,493
5550-0100	Whelen Super LED lower level warning light package. Includes (6) red 600 LED light heads and (4) red 500 LED light heads w/chrome flanges. Locate side facing lights: [#LOC].	$2,628
5550-0101	Whelen Super LED lower level warning light package. Includes (6) 600 red LED light heads, (2) 900 red LED light heads and (2) 500 red LED light heads w/chrome flanges. Locate side facing lights: [#LOC].	$2,762
5550-0102	Whelen Super LED lower level warning light package. Includes (6) 600 LED light heads, (2) 900 LED light heads and (2) 500 LED light heads w/chrome flanges. Locate side facing lights: [#LOC].	$2,762
5550-0103	Whelen Super LED lower level warning light package. Includes (8) 600 Super LED light heads and (4) 500 Super LED light heads w/chrome flanges where applicable. Locate side facing lights: [#LOC].	$3,625
5550-0104	Whelen 600 series Super LED lower level warning light package. Includes (8) red and (2) red/white LED light heads w/chrome flanges. Locate side facing lights: [#LOC].	$3,245
5550-0106	Whelen Super LED lower level warning light package. Includes (6) 600 red LED light heads, (2) 400 amber LED light heads and (2) 500 red LED light heads w/chrome flanges. Locate side facing lights: [#LOC].	$2,507
5550-0107	Whelen Super LED lower level warning light package. Includes (8) red 600 LED light heads and (2) red 500 LED light heads w/chrome flanges. Locate side facing lights: [#LOC].	$2,628
5550-0109	Federal Signal QuadraFlare LED lower level warning light package. Includes (5) QL64XF-R LED light heads with bezels and (5) QL64XF-B LED light heads with bezels. Lights to alternate red/blue around unit; see specificaton. Locate side facing lights: [#LOC].	$2,326
5550-0110	Whelen Super LED lower level warning light package. Includes (4) red 600 LED light heads, (4) blue 600 LED light heads, (1) red 500 LED light head and (1) blue 500 LED light head. LIghts to alternate red/blue around unit; see specification. Locate side facing lights: [#LOC].	$2,628
5550-0112	Federal Signal QuadraFlare LED upper level side warning light package. Includes (2) QL97XF red LED light heads with bezels. Located (1) side facing on Driver and Officer side upper rear corners.	$808
5550-0113	Federal Signal QuadraFlare LED upper level rear warning light package. Includes (2) QL97XF red LED light heads with bezels. Located (1) Driver and (1) Officer upper rear corners.	$808
5550-0114	Weldon Diamondback V46 LED lower level warning light package. Includes (10) red LED light heads w/clear lenses and chrome flanges. Locate side facing lights: [#LOC].	$2,824
5550-0117	Whelen Super LED lower level warning light package. Includes (6) 600 Super LED light heads (2 red forward/2 red rearward/2 amber rearward) and (6) side facing 500 Super LED red light heads w/chrome flanges where applicable. Requires additional side facing lights midship to meet blocking mode. Locate side facing lights: [#LOC].	$3,585
5550-0123	Whelen M6 Super LED lower level warning light package. Includes (8) red M6R LED light heads and (2) red 500 Super LED light heads w/chrome flanges. Locate side facing lights: [#LOC].	$2,928
5550-0125	Whelen M6RC Super LED lower level warning light package. Includes (8) red M6RC LED light heads and (2) red 500 Super LED light heads w/chrome flanges and clear lenses. Locate side facing lights: [#LOC].	$2,928
5550-0127	Federal Signal QuadraFlare LED lower level warning light package. Includes (10) QL64XFC-R LED light heads with clear lenses and bezels. Locate side facing lights: [#LOC].	$2,326
5550-0129	Whelen 600 series Super LED lower level warning light package. Includes (5) red LED light heads w/chrome flanges and (5) blue LED light heads w/chrome flanges. LIghts to alternate red/blue around unit; see specification. Locate side facing lights: [#LOC].	$2,781
5550-0130	Weldon Diamondback V46W-C/V26W-C LED lower level warning light package. Includes (8) red V46 LED light heads w/clear lenses and (2) red V26 LED light heads w/clear lenses. Locate side facing lights: [#LOC].	$2,728
5550-0131	Whelen Super LED lower level warning light package. Includes (8) 600 LED light heads (7 red,1 blue rear facing officer side) and (2) red 500 LED light heads w/chrome flanges. Locate side facing lights: [#LOC].	$2,628
5550-0132	Whelen Super LED lower level warning light package. Includes (8) red 600 LED light heads and (2) red TIR3 LED light heads grommet mounted. Locate side facing lights: [#LOC].	$2,502
5550-0135	Whelen Super LED lower level warning light package with clear lenses. Includes (6) red 600 LED light heads, (2) red/clear 600 split LED light heads (side facing forward position) and (2) red 500 LED light heads w/chrome flanges. Locate side facing lights: [#LOC].	$3,229
5550-0147	Whelen Super LED lower level warning light package with clear lenses. Includes (4) 600 LED light heads (2-red, 2-blue), (4) 900 LED light heads (2-red, 2-blue) and (2) 500 TIR6 LED light heads (1-red, 1-blue) w/chrome flanges. Locate side facing lights: [#LOC].	$3,346
5550-0148	Whelen M6 Super LED lower level warning light package. Includes (6) red M6RC LED light heads with clear lenses and chrome flanges, (4) split red/clear M6D light heads with clear lenses and chrome flanges. See specifications for locations of split lights. Locate side facing lights: [#LOC].	$3,344

5550-0149	Whelen M6 Super LED lower level warning light package. Includes (10) red M6R LED light heads w/chrome flanges. Locate side facing lights: [#LOC].	$3,298
5550-0152	Federal Signal QuadraFlare LED lower level warning light package. Includes (8) QL64XF-R red LED light heads with bezels and (2) forward facing QL64SFC-RC split red/clear LED light heads with bezels. Locate side facing lights: [#LOC].	$2,413
5550-0153	Whelen M series Super LED lower level warning light package with clear lenses. Includes (4) M6 LED light heads (2-red, 2-blue), (4) M9 LED light heads (2-red, 2-blue) and (2) 500 TIR6 LED light heads (1-red, 1-blue) w/chrome flanges. Locate side facing lights: [#LOC].	$3,607
5550-0154	Whelen M6 Super LED lower level warning light package. Includes (1) red M6RC LED light head with clear lens and chrome flange, (1) blue M6BC with clear lens and chrome flange and (8) split red/clear M6D light heads with clear lenses and chrome flanges. Locate side facing lights: [#LOC].	$3,580
5550-0155	Whelen Super LED lower level warning light package with clear lenses. Includes (8) 600 LED light heads (6 red,2 blue; (1) forward and (1) rearward facing officer side) and (2) red 500 LED light heads w/chrome flanges. Locate side facing lights: [#LOC].	$2,628
5550-0159	Whelen M6 Super LED lower level warning light package. Includes (6) M6RC red LED light heads with clear lenses, (2) M9RC red LED light heads with clear lenses and (2) red 500 Super LED light heads w/chrome flanges and clear lenses. Locate side facing lights: [#LOC].	$3,762
5550-0163	Whelen M6 Super LED lower level warning light package. Includes (8) red/blue M6J LED light heads and (2) red/blue 500 Super LED light heads w/chrome flanges and clear lenses. Locate side facing lights: at forward most position, in rear wheelwell offset to front, and side facing at rear of body in rubrail if equipped.	$3,256
5550-0164	Whelen 600 series Super LED lower level warning light package. Includes (10) red LED light heads w/clear lenses and chrome flanges. Locate side facing lights: [#LOC].	$2,781
5550-0169	Federal Signal QuadraFlare LED lower level warning light package. Includes (10) QL64XF-B blue LED light heads with bezels. Locate side facing lights: [#LOC].	$2,326
5550-0170	Whelen Super LED lower level warning light package. Includes (8) 600 Series (4) red & (4) blue, (2) 400 Series (1) red & (1) blue and chrome flanges alternating in colors. Locate side facing lights: at forward most position, in rear wheelwell offset to front, and on tailboard mounted light box above rear tailboard. Lights will alternate color from light to light. All lights will have clear lenses with colored LEDs.	$2,781
5550-0171	Whelen Super LED lower level warning light package. Includes (4) red 600 LED light heads, (4) blue 600 LED light heads, (1) red 500 LED light head and (1) blue 500 LED light head. Lights to be driver side red, officer side blue; see specification. Locate side facing lights: [#LOC].	$2,628
5550-0173	Whelen M6 Super LED lower level warning light package. Includes (8) red M6R LED light heads and (2) red M2R LED light heads. Locate side facing lights: [#LOC].	$2,928
5550-0178	Whelen Super LED lower level warning light package with clear lenses. Includes (8) red 600 LED light heads and (2) red 500 LED light heads w/chrome flanges. Locate side facing lights: [#LOC].	$2,628
5550-0180	Whelen M6 Super LED lower level warning light package. Includes (10) red M6 LED light heads w/clear lenses and chrome flanges. Locate side facing lights: [#LOC].	$3,298
5550-0181	Whelen Super LED lower level warning light package with clear lenses. Includes (8) red/clear M6 split LED light heads and (2) split red/clear M2 LED light heads w/chrome flanges. State of Maryland only. Locate side facing lights: [#LOC].	$3,611
5550-0183	Whelen M6 Super LED lower level warning light package. Includes (8) red M6R LED light heads and (2) red TIR3 LED light heads. Locate side facing lights: [#LOC].	$2,928
5550-0188	Whelen M6 Super LED lower level warning light package. Includes (6) red M6R and (4) blue M6B LED light heads w/chrome flanges. See specifications for color locations. Locate side facing lights: [#LOC].	$3,298
5550-0189	Whelen Super LED lower level warning light package. Includes (7) red 600 LED light heads, (1) blue 600 LED light heads and (2) red 500 LED light heads. Locate side facing lights: [#LOC].	$2,628
5550-0190	Federal Signal QuadraFlare LED lower level warning light package. Includes (5) QL64XF-R LED light heads with bezels and (5) QL64XF-B LED light heads with bezels. Lights to alternate red/blue around unit; see specificaton. Locate side facing lights: [#LOC].	$2,326
5550-0191	Weldon Diamondback V46/V79 LED lower level warning light package. Includes (8) red V46 LED light heads w/clear lenses and (2) red V79 LED light heads w/clear lenses. Locate side facing lights: [#LOC].	$3,315
5550-0192	Federal Signal QuadraFlare LED lower level warning light package. Includes (8) QL64XF-R LED light heads with bezels and (2) IMPAXX LED model IPX302-4 light heads. Locate side facing lights: [#LOC].	$2,085
5550-0194	Federal Signal QuadraFlare LED lower level warning light package. Includes (4) QL64XF-R LED light heads, (4) QL64XF-B LED light heads, (1) IMPAXX LED model IPX302-3 light head and (1) IMPAXX LED model IPX302-4 light head. Lights to alternate red/blue around unit; see specification. Locate side facing lights: [#LOC].	$2,123
5550-0197	Weldon Diamondback LED lower level warning light package. Includes (4) red V46 LED light heads w/clear lenses, (4) red V79 LED light heads w/clear lenses and (2) red V26 LED light heads w/clear lenses. Locate side facing lights: [#LOC].	$3,711
5550-0208	Federal Signal QuadraFlare LED lower level warning light package. Includes (4) QL64XF-R LED light heads with bezels (chrome) and (8) IMPAXX LED model IPX302-4 light heads with bezels (chrome). Locate side facing lights: [#LOC].	$2,264

5550-0210	Federal Signal QuadraFlare LED lower level warning light package. Includes (8) Quadraflare light heads, (7) QL64XF-R (red) LED lights and (1) QL64XF-B (blue) LED light with bezels and (2) IMPAXX LED model IPX302-4 light heads. Locate side facing lights: [#LOC].	$2,085
5550-0211	Whelen Super LED lower level warning light package with clear lenses. Includes (8) 600 LED light heads (4 red driver's side, 4 blue officer's side) and (2) 500 LED light heads (1 red driver's side, 1 blue officer's side)w/chrome flanges. Locate side facing lights: [#LOC].	$2,628
5550-0212	Whelen 900 series Super LED upper level rear panel warning light package. Includes (2) Whelen 900 Super LED lights with clear lens. (1) red model 90RRF5CR driver's side and (1) blue model 90BBF5CR officer's side. Includes weatherproof connectors. Located upper rear corners.	$1,026
5550-0214	Whelen Super LED lower level warning light package with clear lens. Includes (7) red 600 LED light heads, (1) blue 600 LED light heads and (2) red 500 LED light heads. Locate side facing lights: [#LOC].	$2,628
5550-0215	Whelen 900 series Super LED upper level side warning light package with clear lens. Includes (2) red Whelen 900 Super LED lights. Includes weatherproof connectors. Located (1) on the driver and (1) on the officer side upper rear body panels.	$1,026
5550-0216	Whelen 900 series Super LED upper level rear panel warning light package with clear lens. Includes (1) red, (1) blue Whelen 900 Super LEDs lights. Includes weatherproof connectors. Located (1) red on driver and (1) blue on officer upper rear corners.	$1,026
5550-0223	Whelen 900 series Super LED upper level side warning light package. Includes (2) red Whelen 900 Super LED model 90RRF5RR lights. Includes weatherproof connectors. Located (1) on the driver and (1) on the officer side upper forward side corners.	$1,026
5550-0225	Whelen M6 Super LED lower level warning light package. Includes (8) red M6RC LED light heads with clear lens and (2) red M2RC LED light heads with clear lens. Locate side facing lights: [#LOC].	$2,928
5550-0227	Whelen M6/M7/600/IONWR Super LED lower level warning light package. Includes (2) red M6R LED light heads, (4) split red/clear M7D light heads, (2) 600 Series Super LED light heads, Red with clear lenses and (2) red IONWR LED light heads. See specification for location of split lights. Locate side facing lights: [#LOC].	$3,452
5550-0234	Whelen M6RC Super LED lower level warning light package. Includes (8) red M6RC LED light heads and (2) red 500 Super LED light heads w/chrome flanges and clear lenses. Locate side facing lights: [#LOC].	$2,928
5550-0236	Whelen M6 Super LED lower level warning light package. Includes (6) red M6R LED light heads, (2) blue M6B LED light heads (1 officer front and 1 officer rear facing) and (2) red M2R LED light heads. Locate side facing lights: [#LOC].	$2,928
5550-0238	Federal Signal QuadraFlare LED lower level warning light package. Includes (3) QL64XF-R LED light heads, (3) QL64XF-B LED light heads, (2) IMPAXX LED model IPX302-3 light head and (2) IMPAXX LED model IPX302-4 light head. Lights to alternate red/blue around unit; see specification. Locate side facing lights: [#LOC].	$2,123
5550-0240	Whelen Super LED lower level warning light package. Includes (8) red 600 LED light heads and (2) red 500 LED light heads w/chrome flanges. Locate side facing lights: [#LOC].	$2,628
5550-0241	Whelen M6 Super LED lower level warning light package. Includes (6) M6R red LED light heads, (2) M9R red LED light heads and (2) red M2R red Super LED light heads. Locate side facing lights: [#LOC].	$3,762
5550-0242	Whelen Super LED lower level warning light package. Includes (8) 600 LED light heads (6) Red/Blue (2) Red /White with clear lenses and (2) red 500 LED light heads with clear lenses and chrome flanges. Locate side facing lights: [#LOC].	$2,970
5550-0244	Whelen M6 Super LED lower level warning light package. Includes (8) split red/clear M6D LED light heads and (2) red TIR3 LED light heads. Locate side facing lights: [#LOC].	$3,099
5550-0245	Whelen Super LED lower level warning light package. Includes (4) red 600 LED light heads, (4) blue 600 LED light heads, (1) red 500 LED light head and (1) blue 500 LED light head all with clear lenses. Lights to be driver side blue, officer side red; see specification. Locate side facing lights: [#LOC].	$2,628
5550-0248	Federal Signal QuadraFlare LED lower level warning light package with clear lenses. Includes (8) QL64XFC-R LED light heads with bezels and (2) IMPAXX LED model IPX300-4 light heads. Locate side facing lights: [#LOC].	$2,085
5550-0249	Whelen M6 Super LED lower level warning light package. Includes (5) red M6R LED light heads, (2) M6J split red/blue LED light heads, (1) blue M6B LED light head (officer front) and (2) red M2R LED light heads. Locate side facing lights: [#LOC].	$3,316
5550-0251	Whelen 600 series Super LED lower level warning light package. Includes (10) LED light heads w/chrome flanges. (5) Red, (5) blue alternating. Locate side facing lights: [#LOC].	$2,781
5550-0252	Whelen 600 series Super LED lower level warning light package. Includes (8) red LED light heads with clear lenses and (2) split red/blue LED light heads with clear lenses. Locate side facing lights: [#LOC].	$2,829
5600-0002	Warning light Whelen 600 series strobe (PR) [#COL]. Requires power pack or option with spare power pack outlets. Includes weatherproof connectors. Requires engineering approval for NFPA applications. Location(s): [#LOC]	$413
5600-0005	Warning light Whelen 700 series strobe (PR) [#COL]. Requires power pack or option with spare power pack outlets. Includes weatherproof connectors. Requires engineering approval for NFPA applications. Location(s): [#LOC]	$409

5600-0008	Warning light Whelen 900 series strobe (PR) [#COL]. Requires power pack or option with spare power pack outlets. Includes weatherproof connectors. Requires engineering approval for NFPA applications. Location(s): [#LOC]	$413
5600-0011	Whelen power supply model UPS64LX 4Place 75Watt strobe.	$533
5600-0012	Whelen power supply model ISP148 eight (8) place 140watt strobe.	$1,251
5600-0013	Whelen power supply model ISP188 eight (8) place 180watt strobe.	$1,339
5600-0016	Warning light Whelen 500 series LED (PR) amber. Location: [#LOC] Surface mounted with weatherproof connector. Requires engineering approval for NFPA applications.	$405
5600-0017	Warning light Whelen 500 series LED (PR) red. Surface mounted with weatherproof connector. Location: [#LOC]	$405
5600-0018	Warning light Whelen 500 series LED (PR) blue. Location: [#LOC] Surface mounted with weatherproof connector. Requires engineering approval for NFPA applications.	$697
5600-0020	Warning light Whelen 600 series LED (PR) amber. Location: [#LOC] Surface mounted with weatherproof connector. Requires engineering approval for NFPA applications.	$723
5600-0021	Warning light Whelen 600 series LED (PR) red. Surface mounted with weatherproof connector. Location: [#LOC]	$723
5600-0022	Warning light Whelen 700 series LED (PR) red. Surface mounted with weatherproof connector. Location: [#LOC]	$632
5600-0023	Warning light Whelen 900 series LED (PR) amber. Location: [#LOC] Surface mounted with weatherproof connector. Requires engineering approval for NFPA applications.	$1,308
5600-0024	Warning light Whelen 900 series LED (PR) red. Surface mounted with weatherproof connector. Location: [#LOC]	$1,308
5600-0025	Warning light Whelen 600 series halogen (PR) [#COL]. Includes weatherproof connectors. Requires engineering approval for NFPA applications. Location(s): [#LOC]	$334
5600-0029	Code3 Model 550 rotating (PR) with [#COL] domes. Location: [#LOC].	$357
5600-0030	Code3 Model #550/#41. Includes (2) #550's with red domes and (2) #41 lights with [#COL] lenses. Total four (4) lights at rear upper. Location of Model 550 lights: [#LOC].	$920
5600-0031	Code 3 / PSE Oscilaser warning light (PR). Lights are to be located on front of cab in the inboard position of the quad bezel.	$555
5600-0032	Code3 model #85BZR red LED warning light with chrome bezel (PR). Location: [#LOC]	$1,390
5600-0033	Whelen beacon with halogen rotator and 700 series strobe (PR) Model B6R with red domes and [#COL] strobes. Location [#LOC]. Requires power pack.	$791
5600-0034	Federal model SY12FS Sentry (PR) with [#COL] domes. Location: [#LOC].	$358
5600-0036	Federal model IVP100 Vector pod (PR) with [#COL] domes. Location: [#LOC].	$427
5600-0037	Hazard (door ajar) light Federal Signal model FB3 Comp R. Location: [#LOC].	$222
5600-0038	Federal Model IVP200F Vector pod warning light (PR) with [#COL] filters. Location: [#LOC].	$464
5600-0040	Whelen beacon Model RB6PAP (PR) with amber lenses. Located one (1) each side at rear. Location: [#LOC]	$436
5600-0041	Warning light Federal Signal GS2 strobe (PR) [#COL]. Requires power pack or option w/spare power pack outlets. Requires engineering approval for NFPA applications. Location(s): [#LOC].	$399
5600-0046	Warning light Federal Signal GH1F halogen (PR) [#COL]. Location(s): [#LOC]	$298
5600-0048	Warning light Federal Signal GL5 LED (PR) red. Location: [#LOC]	$590
5600-0049	Warning light Federal Signal GS5 strobe (PR) [#COL]. Requires power pack or option w/spare power pack outlets. Requires engineering approval for NFPA applications. Location(s): [#LOC]	$365
5600-0051	Warning light Federal Signal GL5 LED (PR) amber. Location: [#LOC].	$610
5600-0052	Federal Signal SPS4-NFPA (4) place 90 watt strobe power supply. Required when using Federal Signal strobes.	$528
5600-0053	Federal Signal SPS8-NFPA (8) place 192 watt strobe power supply. Required when using Federal Signal strobes.	$942
5600-0061	Mars 888 pedestal mounted traffic clearing light on front of cab above grille.	$876
5600-0062	Warning light Roto Ray 200 with red lenses. N/A on commercial chassis. Locate on front of cab center above grille.	$1,512
5600-0063	Warning light Roto Ray 200 with (2) red and (1) clear lenses. N/A on commercial chassis. Locate on front of cab center above grille.	$1,512
5600-0067	Federal Signal Model #100 beacon (PR) with [#COL] domes. Location: [#LOC].	$457
5600-0074	Opticom Emitter 3M #792H. Emitter and control only. Wire through parking brake. Location: [#LOC].	$2,800
5600-0075	Opticom Emitter 3M #592 Chrome. Emitter and dash control only. Wire through parking brake. Location: [#LOC].	$3,328
5600-0078	Whelen Super LED beacon (PR) model L31H with [#COL] domes. Location [#LOC].	$1,730
5600-0079	Whelen beacon with halogen rotator and 700 series LED (PR) Model B6TM with red domes and [#COL] LEDs. Location [#LOC].	$1,309
5600-0080	Whelen beacon with LED upper beacon and 700 series Super LED (PR) model B6LED with red domes and [#COL] LEDs. Location: [#LOC].	$2,650
5600-0081	Code 3 / PSE Oscilaser warning light (PR). Lights are to be located on front of cab above quad bezels.	$582
5600-0083	Warning light Code3 LXEX1F-R LED (PR). Surfaced mounted with clear lens. Location: [#LOC]	$659
5600-0085	Tomar strobe preemption emitter with chrome housing. Includes pedistal mount and switch on dash. Wire through parking brake. Location: [#LOC].	$1,367

5600-0086	Whelen beacon model RB6T (PR) with [#COL] domes. Location: [#LOC].	$370
5600-0087	Warning light Code 3 65BZA LED (PR) amber. Surface mounted with bezel. Location: [#LOC]	$531
5600-0088	Warning light Code 3 65BZR LED (PR) Red. Surface mounted with bezel. Location: [#LOC]	$531
5600-0089	Warning Light Code3 model #65BZRW split red/clear LED with chrome bezel (PR). Location: [#LOC].	$697
5600-0090	Warning light Federal Signal QuadraFlare QL64XF LED (PR) red. Surface mounted with bezel. Location: [#LOC].	$561
5600-0092	Opticom Emitter 3M #792HF. Emitter with filter and control only. Wire through parking brake. Location: [#LOC].	$2,800
5600-0093	Whelen beacon with halogen rotator and 700 series scene (PR) Model B6TH*Z1P. Dome color: [#COL]. Location [#LOC].	$1,104
5600-0094	Warning light Federal Signal QL64XF LED (PR) amber. Surface mounted with bezel. Location: [#LOC].	$561
5600-0098	Warning light Whelen 600 series Super LED (PR) amber. Location: [#LOC].	$558
5600-0099	Warning light Whelen 600 series Super LED (PR) red. Location: [#LOC].	$558
5600-0100	Warning light Whelen 600 series Super LED (PR) blue with clear lens. Location: [#LOC].	$558
5600-0101	Whelen beacon with halogen rotator and 700 series LED (PR) Model B6TM with amber dome on driver side, red dome officer side and [#COL] LEDs. Location [#LOC].	$1,309
5600-0105	Hazard (door ajar) light 2" LED. Location: [#LOC].	$32
5600-0106	Warning light Roto Ray LED with (2) red and (1) clear lights. Locate on front of cab center above grille.	$2,570
5600-0107	Warning light Roto-Ray LED with red lenses. Locate on front of cab center above grille.	$2,570
5600-0108	Light Code 3 model 2118-NFPA-2 (PR). Located one each side on rear upper of body.	$1,692
5600-0109	Warning light Whelen 500 series LED (4) red. Surface mounted with weatherproof connector. Flashing lights wired through door ajar. Location: One on each of the interior cab doors (outboard position).	$807
5600-0111	Warning light Whelen 600 series Super LED (PR) white with clear lens. Location: [#LOC]	$633
5600-0112	Warning light Whelen 600 series LED (PR) blue. Surface mounted. Location: [#LOC]	$830
5600-0113	Code 3 Optix 3 LED lights. Locate (1) each side at rear mounted to upper rear warning light brackets. Lights to be amber and switched with the upper rear warning lights.	$587
5600-0114	Tomar RECT-79S (4) two red, two blue and one 780-1228-WP power supply. Includes RECT-79-SMFP chrome bezels. Lights to be located one each side at rear above tail lights (drv side blue, ofc side red) and one each side at rear up high (drv side red, ofc side blue). Lights to flash in an "X" pattern.	$1,983
5600-0115	Tomar RECT-46 LED (PR) one red, one blue. Includes Tomar 930DM-LED-LB flasher and RECT-46LBZ chrome bezels. Locate up high on rear of body just below compartment top (drv side red, ofc side blue). Lights to flash in an "X" pattern with the lower level warning lights.	$920
5600-0117	Whelen Ultra Freedom Micro Edge LED (PR) model MCFLED25 clear lens with red LEDs. Location [#LOC].	$1,798
5600-0118	Warning light Whelen 500 series TIR6 Super LED (PR) red. Surface mounted 5TSMAC bezel with weatherproof connector. Location: [#LOC].	$472
5600-0122	Light Code 3 model 2122NFPA1 (PR) 22.5" long. Red LED with clear lens. Location: one each side on rear body compartment top.	$3,581
5600-0123	Warning light Code 3 LXEX2F-AA LED (PR) amber. Surface mounted with bezel. Location: (1) each side rear compartment face up high	$716
5600-0124	Warning light Code 3 LXEX1F-R LED (PR) red. Surface mounted with bezel. Location: [#LOC]	$650
5600-0125	Code3 model 780 LED flasher. Flasher will control lower level warning lights ipo multiplexing	$1,524
5600-0126	Body Whelen strobe power supply located in R1 on rear wall just below offset.	$111
5600-0127	Federal Model HighLighter LED Mini-lightbar (PR) with [#COL] lenses. Location: [#LOC].	$1,656
5600-0128	Warning light Whelen 600 series split Super LED (PR) red/amber. Location: [#LOC]	$725
5600-0129	Warning light Whelen 600 series split Super LED (PR) red/clear. Location: [#LOC].	$779
5600-0130	Whelen model UFM8 LED flasher (PR). Flashers will control lower level warning lights ipo internal flashers. Locate (1) in cab and (1) in body.	$1,030
5600-0131	Light Whelen model PSR00FRR LED (PR) red. Location: [#LOC].	$355
5600-0132	Warning light Federal Signal QL64XF LED (PR). (1) red and (1) green. Location: Red driver and green officer in front quad inboard of NFPA warning light	$749
5600-0133	Warning light Whelen 900 series Super LED model 90RR5FRR (PR) red. Location: [#LOC].	$1,100
5600-0134	Warning light Whelen 600 series LED red/clear. Surface mounted with weatherproof connector(PR). Location: [#LOC]	$727
5600-0136	Federal MicroEscape LED beacon (PR) with [#COL] lenses. Location: [#LOC]. Requires additional upper level warning or Signal Master.	$1,878
5600-0137	Warning light Whelen 700 series Super LED (PR) red/clear. Surface mounted with weatherproof connector. Location: [#LOC]	$734
5600-0138	Warning light Whelen LIN3 series Super LED (PR) red with clear lens. Surface mounted RFLANGCD bezel with weatherproof connector. Location: [#LOC]	$352
5600-0139	Whelen beacon with LED upper beacon and 700 series Super LED (PR) model B6LED with red LEDs/clear domes and [#COL] LEDs/clear lenses. Location: [#LOC].	$2,650
5600-0140	Warning light circuit wiring through chassis reverse. All warning lights.	$71
5600-0142	Warning light Whelen 900 series Super LED model 90RA5FCR (PR) split red (bottom) / amber (top) with clear lenses. Location: [#LOC]	$1,100

5600-0143	Warning lights Whelen 600 series Super LED (PR) red w/clear lens. Location: [#LOC].	$558
5600-0144	Warning light Whelen 500 series TIR6 Super LED (PR) blue. Surface mounted 5TSMAC bezel with weatherproof connector. Location: [#LOC]	$472
5600-0147	Warning light Whelen 600 series LED (PR). Red driver, blue officer surface mounted with weatherproof connector. Location: [#LOC]	$776
5600-0151	Whelen Ultra Freedom Micro Edge LED (PR) (1) driver Model MCFLED25 clear lense with red LEDs and (1) officer MCFLED22 clear lense with blue LEDs. Requires addtional upper level warning lights to meet NFPA. Location: [#LOC].	$1,927
5600-0152	Warning light Whelen 500 series LED (PR) green. Includes switch on pump panel labeled "Ready for Water" Location: (1) centered between grille and windshield on slope, (1) driver side (inside of beavertail if so equipped) up high below hosebed opposite officer discharge.	$721
5600-0153	Warning light Whelen 600 series split Super LED (PR) red/blue driver, red/amber officer. Location: [#LOC].	$725
5600-0154	Warning light Whelen 600 series Super LED (PR). Red driver, blue officer surface mounted with weatherproof connector. Location: [#LOC].	$558
5600-0156	Warning light Federal Signal QL64XF LED (PR) green. Surface mounted with bezel. Location: [#LOC].	$619
5600-0157	Federal Model SY12FS Sentry with green dome. Includes switch on driver overhead. Location: pole mounted center rear cab roof.	$363
5600-0160	Warning light Federal Signal QL97XF LED (PR) red. Surface mounted with bezel (if applicable). Location: [#LOC].	$808
5600-0161	Warning light Federal Signal QL97XF LED (PR) amber. Surface mounted with bezel (if applicable). Location: [#LOC]	$808
5600-0162	Warning light Federal Signal QL64XF LED (PR) blue. Surface mounted with bezel. Location: [#LOC].	$561
5600-0164	Warning light Federal Signal QL64XF LED (PR) white. Surface mounted with bezel. Location: [#LOC].	$650
5600-0165	Warning light Whelen 500 series Super Linear LED (PR) green. Location: [#LOC].	$498
5600-0166	Warning light Whelen 600 series Super LED (PR) green. Location: [#LOC].	$736
5600-0168	Fed QuadraFlare QL97SC-RA Red/Amber split color LED lights located on rear of body up high. Red on top on left side and bottom on right side to simulate "X" pattern. Includes external flasher.	$1,011
5600-0169	Warning light Whelen 900 series Super LED driver side amber / officer side red model 90AA5FAR / 90RR5FRR. Location: [#LOC].	$1,100
5600-0172	Warning light Whelen 900 series Super LED model 90AA5FAR (PR) amber. Location: [#LOC].	$1,100
5600-0173	Federal MicroEscape NFPA compliant LED beacons (PR) clear lenses with [#COL] LED reflectors. Location: [#LOC].	$1,402
5600-0174	Warning light Whelen 900 series Super LED model 90RR5FRR (2) (PR) red. Location: (1) each side rear compartment face up high and (1) each side mounted to the side body towards rear. All wired as part of upper rear warning lights.	$2,262
5600-0176	Mars 888 pedestal mounted traffic clearing lights with clear lenses located one each side of cab above outer quad bezel.	$1,750
5600-0177	Whelen model UFM8 LED flasher (3). Flashers will control warning lights ipo internal flashers. Locate (1) in cab and (2) in body.	$1,545
5600-0181	Warning light Federal Signal Model 360501 LED w/ bezel (PR). Surfaced mounted with blue driver and red officer lenses. Location: [#LOC].	$519
5600-0182	Whelen beacon with LED upper beacon and 700 series Super LED (PR) Model B6LED with amber domes and [#COL] LEDs. Location [#LOC]	$2,650
5600-0183	Warning light Whelen 600 series Super LED (PR). blue driver, green officer surface mounted with weatherproof connector. Location: [#LOC].	$649
5600-0184	Warning light Federal Signal QL64XF LED (PR). (1) red driver, (1) blue officer. Surface mounted with bezel. Location: [#LOC]	$561
5600-0185	Federal Model IVP100 Vector pod (PR) located at the rear cab corners. Driver side to be amber with switch on driver's switch panel and automatically turn off when warning lts are on. Officer side to be blue with switch on driver's switch panel.	$713
5600-0187	Warning light Federal Signal QL97XF LED (PR). (1) red driver, (1) blue officer. Surface mounted with bezel (if applicable). Location: [#LOC].	$808
5600-0189	Federal Intelli model 650205 LED flasher (PR). Flashers will control lower level warning lights ipo internal flashers. Locate (1) in cab and (1) in body.	$817
5600-0190	Warning light Whelen 600 series Super LED (PR). Blue driver, amber officer surface mounted with weatherproof connector. Location: [#LOC].	$558
5600-0191	Whelen beacon with LED upper beacon and 700 series Super LED (PR) Model B6LED with amber driver and red officer domes and [#COL] LEDs. Location [#LOC].	$2,650
5600-0193	Warning light Weldon Diamondback V46W-C00R LED (PR) red w/ clear lenses. Location: [#LOC].	$529
5600-0194	Whelen Super LED beacon Model L11H with amber dome. Includes switch in cab accessible to the driver. Location: center of rear cab roof.	$765
5600-0195	Code3 model XP9501NFPA1 (PR) red LED with clear domes. Location: [#LOC].	$1,903
5600-0196	Fed QuadraFlare QL64SC-RC Red/White split color LED lights in ptd smooth plt alum box above the grille. Red on top on left side and bottom on right side to simulate "X" pattern. Wired to lower zone lighting and switched off with parking brake. Includes ext flasher.	$1,496

5600-0197	Warning light Whelen 600 series Super LED (PR). red driver, green officer surface mounted with weatherproof connector. Location: [#LOC].	$649
5600-0198	Whelen PE215 emitter. Emitter and control only. Wire through parking brake. Location: [#LOC].	$805
5600-0199	Whelen beacon with LED upper beacon and 700 series Super LED (PR) Model B6LED with red driver and blue officer domes and [#COL] LEDs. Location [#LOC].	$2,650
5600-0200	Whelen beacon with LED upper beacon and 700 series Super LED (PR) Model B6LED with red driver and amber officer domes and [#COL] LEDs. Location [#LOC].	$2,650
5600-0201	Warning light Whelen 900 series Super LED model 90RB5FCR (PR) split red / blue with clear lense. Location: [#LOC].	$1,100
5600-0202	Warning light Weldon Diamondback V46W-C00R LED (PR) red w/ clear lenses. Includes diamond plate mounting box. Location: [#LOC].	$854
5600-0205	Warning light Federal Signal GL1F-B LED (PR) blue. Location: [#LOC].	$531
5600-0206	Whelen Micro 400 Super LED (PR) model MC40ED3. Driver side red with red lenses, officer side red side facing with red lenses side and forward; amber rear facing with amber lens. Location [#LOC].	$2,300
5600-0213	Whelen beacon with halogen rotator and 700 series LED (PR) Model B6TM with red dome on driver side, amber dome officer side and [#COL] LEDs. Location [#LOC].	$1,309
5600-0215	Power Arc (PR) Model LED210 yellow with clear lenses. Location: [#LOC].	$1,160
5600-0216	Warning light Whelen M9 series Super LED (PR) red. Location: [#LOC].	$1,266
5600-0217	Power Arc (PR) Model LED210 red with clear lenses. Location: [#LOC].	$1,160
5600-0222	Whelen Super LED beacon Model L31H pole mounted with green dome. Includes switch in officer overhead labeled "Command". Location: center of cab roof to rear of lightbar.	$860
5600-0223	Warning light Code 3 378ABZ LED (PR) amber. Surface mounted with bezel. Location: [#LOC].	$633
5600-0226	Warning light Federal Signal Model 360501-04 LED w/ bezel (PR). Surfaced mounted with red lens. Location: [#LOC].	$370
5600-0227	Warning light Whelen 600 series Super LED (PR). Red driver, blue officer surface mounted with clear lenses and weatherproof connector. Location: [#LOC].	$558
5600-0228	Warning light Whelen 900 series Super LED (PR) with clear lenses. (1) model 90RR5FCR red driver and (1) model 90BB5FCR blue officer. Each light shall have a clear lense w/ colored LEDs. Location: [#LOC].	$1,100
5600-0229	Warning light Whelen 500 series TIR6 Super LED (PR) red driver, blue officer with clear lenses. Surface mounted 5TSMAC bezel with weatherproof connector. Location: [#LOC]	$472
5600-0230	Warning light Whelen 600 series Super LED (PR) blue with blue lens. Location: [#LOC].	$558
5600-0231	Warning light Whelen 600 series Super LED (EA) red. Location: below scene light on driver rear compt face.	$280
5600-0234	Warning light Whelen Dominator series LED model D844000 red driver/blue officer with clear lenses. Location: [#LOC]. Wire through lower level warning.	$842
5600-0235	Hazard (Occupant Detection System) light. Whelen M4 Super LED. Center in overhead console.	$237
5600-0236	Whelen beacon with LED upper beacon and 700 series Super LED (PR) model B6LED with blue driver and red officer domes and [#COL] LEDs. Location: [#LOC].	$2,650
5600-0238	Warning light Whelen 600 series Super LED (PR). (1) red steady burn front driver side below windshield and (1) flashing amber driver side above tail lights to meet California DOT requirements.	$558
5600-0240	Warning light Whelen M4R LED (4) red. Surface mounted with weatherproof connector. Flashing lights wired through door ajar. Location: One on each of the interior cab doors (outboard position).	$1,107
5600-0241	Warning light Whelen M6R series Linear Super LED (PR) red. Location: [#LOC].	$639
5600-0242	Warning light Whelen M6 series Linear Super LED (PR) split red/amber with clear lens. Location: [#LOC].	$700
5600-0243	Warning light Whelen 500 series split TIR6 Super LED (PR) red/amber. Surface mounted 5TSMAC bezel with weatherproof connector. Location: [#LOC].	$541
5600-0244	Whelen Micro 400 Super LED (PR) model MC40ED3. Driver side red with clear lenses, officer side red side facing with clear lenses side and forward; amber rear facing with clear lens. Location [#LOC].	$2,300
5600-0245	Warning light Federal Signal QL64XF LED (PR) red with clear lens. Surface mounted with bezel. Location: [#LOC]	$561
5600-0248	Warning light Whelen M9 series Super LED (PR) red driver, blue officer with clear lenses. Location: [#LOC].	$1,266
5600-0249	Warning light Whelen M6 series Linear Super LED (PR) red driver, blue officer with clear lenses. Location: [#LOC].	$639
5600-0250	Whelen beacon with LED upper beacon and 700 series Super LED (PR) Model B6LED with red LED/clear dome driver and blue LED/clear dome officer and [#COL] LEDs/clear lenses. Location: [#LOC].	$2,650
5600-0251	3m Opticom GPS vehicle system kit. Includes antenna, radio and control unit. Wired through park brake.	$7,713
5600-0252	Hazard (door ajar) light Federal Signal Fire Bolt strobe. Location: [#LOC].	$223
5600-0253	Warning light Federal Signal QL97XF LED (PR). (1) red driver, (1) amber officer. Surface mounted with bezel (if applicable). Location: [#LOC]	$808
5600-0254	Warning light Federal Signal QL97XF LED (PR). (1) amber driver, (1) red officer. Surface mounted with bezel (if applicable). Location: [#LOC]	$808

5600-0255	Warning light Whelen 900 series Super LED driver side red model (90RR5FRR) / officer side amber (90AA5FAR). Location: [#LOC]	$1,100
5600-0256	Warning light Whelen M-Series Super LED model M9J (PR) red/blue. Surface mounted with weatherproof connector. Location: [#LOC].	$1,266
5600-0257	Warning light Whelen M6 series Linear Super LED (PR) split red/blue with clear lens. Location: [#LOC].	$700
5600-0258	Warning light Whelen M9RC series Super LED (PR) red with clear lens. Location: [#LOC].	$1,074
5600-0259	Warning light Whelen M6BC series Linear Super LED (PR) blue with clear lens. Location: [#LOC].	$639
5600-0260	Warning light Weldon Diamondback V46W-C00A LED (PR) amber w/ clear lenses. Location: [#LOC].	$529
5600-0263	Whelen Super LED beacon Model L31H with green dome. Includes switch on pump operator panel labeled "Command". Location: centered rear cab roof.	$860
5600-0264	Whelen beacon with LED upper beacon and 700 series Super LED (PR) Model B6LED with blue LED/clear dome driver and red LED/clear dome officer and [#COL] LEDs/clear lenses. Location: [#LOC].	$2,650
5600-0265	Hazard light, 2.5" incandescent additional amber. Location and function: center overhead for light tower. Wired through audible alarm if equipped.	$32
5600-0266	Whelen Super LED beacon (PR) model L31H with red driver, blue officer LED and clear domes. Location rear upper body on aerial style brackets.	$1,730
5600-0267	Warning light Whelen Dominator series LED with red driver/blue officer with clear lenses. Location: [#LOC]. Wire through lower level warning.	$855
5600-0268	Mars 888 pedestal mounted traffic clearing light located one each side of cab outboard above the outer quad bezel on contoured pedestal bracket. Lens color(s): driver red, officer clear.	$2,087
5600-0269	Whelen Super LED beacon (PR) model L31H with red driver, amber officer LED and clear domes. Location [#LOC].	$1,730
5600-0272	Hazard (door ajar) light Federal Signal 2.5" LED model 607120-04. Location: [#LOC].	$54
5600-0273	Warning light Whelen 900 series Super LED (PR). (1) model 90RR5FCR red driver and (1) model 90BB5FCR blue officer. Each light shall have a clear lense w/ colored LEDs. Location: side facing (1) each side upper front body panels and side facing (1) each side upper rear body panels.	$1,100
5600-0274	Warning light Whelen 900 series Super LED (PR). (1) model 90RR5FCR red driver and (1) model 90BB5FCR blue officer. Each light shall have a clear lense w/ colored LEDs. Location: Rear facing up high on the rear one above each other.	$1,100
5600-0275	Warning light Whelen M6AC series Linear Super LED (PR) amber with clear lens. Location: [#LOC].	$639
5600-0276	Whelen Ultra Freedom Micro Edge LED (PR) model MCFLED clear lens with amber driver / red officer LEDs. Location [#LOC].	$1,798
5600-0277	Warning light Whelen M6C series Linear Super LED (PR) white. Location: [#LOC].	$639
5600-0279	Hazard (door ajar) light Whelen model L53RP red. Location: [#LOC].	$222
5600-0284	Whelen Super LED beacon (PR) model L31H with blue driver, red officer LED and clear domes. Location [#LOC].	$1,730
5600-0285	Warning light Roto-Ray LED with (1) red, (1) blue and (1) clear lenses. Locate on front of cab center above grille.	$2,570
5600-0286	Warning light Whelen M6RC series Super LED (PR) red with clear lens. Location: [#LOC].	$611
5600-0287	Warning light Whelen Dominator Plus model DP880000 with (8) red LINZ6 LEDs. Location: [#LOC]. Wire through lower level warning.	$1,407
5600-0288	Whelen red TIR3 LED light heads (2). Locate in rubrail below L1 and R1.	$266
5600-0289	Warning light Whelen 900 series Super LED model 90BB5FBR (PR) blue. Location: [#LOC].	$1,100
5600-0290	Warning light Whelen 600 series Super LED (PR) red with diamond plate mounting boxes. Location: [#LOC].	$719
5600-0291	Warning light Roto Ray LED with (1) red, (1) green and (1) white lights. Locate on front of cab center above grille.	$2,570
5600-0292	Warning light Whelen 900 series Super LED model 90RR5FRC (PR) red w/ clear lens. Location: [#LOC].	$1,100
5600-0293	Light Whelen model PSC00FCR LED (PR) white. Lights are wired to reverse and respective turn signal. Location: (1) each side below L1/R1 just ahead of rear wheels in rubrail (if equipped).	$818
5600-0294	Warning light Federal Signal IMPAXX model IPX600-R red LED w/ bezel (PR). Surfaced mounted with clear lens. Location: [#LOC].	$432
5600-0295	Warning lights Weldon Diamondback V79W-C10A LED amber w/ clear lenses (PR). Location: [#LOC].	$752
5600-0296	Warning light Weldon Diamondback V46W-C LED (PR) red driver, amber officer w/ clear lenses. Location: [#LOC].	$529
5600-0297	Warning light Whelen Dominator series LED model D860020 red/white. Includes R/W/R/R/R/R/W/R LEDs with clear lenses. Location: [#LOC]. Wire through lower level warning.	$845
5600-0298	Warning light Power Arc model M90FK-W LED (PR). Color: White. Location: [#LOC].	$925
5600-0299	Warning light Federal Signal IMPAXX LED model IPX302-4 w/ bezel (PR). Surfaced mounted with red lens. Location: [#LOC].	$296
5600-0300	Warning lights Weldon Diamondback V79W-C00R LED red w/ clear lenses (PR). Location: [#LOC].	$752
5600-0301	Warning light Whelen M2 Super LED warning lights. Includes (2) red M2R LED light heads, (red LEDs, red lens) w/chrome flanges (if applicable). Location: [#LOC].	$509
5600-0302	Warning light Whelen M2 Super LED warning lights. Includes (2) red M2R LED light heads, (red LEDs, clear lens) w/chrome flanges (if applicable). Location: [#LOC].	$509
5600-0303	Whelen Super LED beacon (PR) model L31H with [#COL] domes. Location [#LOC].	$1,730

5600-0305	Warning light Whelen M6 series Linear Super LED (PR) amber driver, red officer with clear lenses. Location: [#LOC].	$639
5600-0306	Opticom Emitter 3M 794H. LED emitter and control only. Location and activation: [#LOC].	$2,155
5600-0307	Warning light Whelen 600 series LED (PR) with clear lens. Red driver, blue officer surface mounted with weatherproof connector. Location: [#LOC]	$776
5600-0309	Warning light Whelen Vertex Super LED warning lights. Includes (2) red model VTX609R LED light heads with clear lens, w/chrome flanges model VTXFC. Location: [#LOC].	$477
5600-0310	Warning light Whelen M6 series Linear Super LED (PR) split red/clear with clear lens. Location: [#LOC].	$700
5600-0311	Warning light Whelen 900 series Super LED model 90AA5FCR (PR) amber with clear lenses. Location: [#LOC].	$1,100
5600-0312	Light Whelen model PSA00FAR LED (PR) amber. Location: [#LOC].	$355
5600-0313	Warning light Whelen 900 series Super LED with clear lens model 90BB5FCR (PR) blue. Location: [#LOC].	$1,100
5600-0314	Federal Signal Vision LED rotating beacons model VSLR-IPX-R1R21 with rear facing IPX6 red LED warning light (Requires additional rear facing warning lights for NFPA compliance). Location: [#LOC].	$2,164
5600-0315	Whelen Micro Liberty LED (PR) (1) driver Model MCSLED2R clear lense with red LEDs and (1) officer MCSLED2B clear lense with blue LEDs. Location: [#LOC].	$1,514
5600-0316	Warning light Whelen M4AC Super-LED lights (PR) amber with clear lenses. Location: [#LOC].	$820
5600-0317	Whelen Super LED beacon (PR) model L31H with red driver, blue officer LED and clear domes. Location: [#LOC].	$1,730
5600-0318	Whelen Ultra Freedom Micro Edge LED (PR) (1) officer Model MCFLED25 clear lense with red LEDs and (1) driver MCFLED22 clear lense with blue LEDs. Requires addtional upper level warning lights to meet NFPA. Location: [#LOC].	$1,927
5600-0320	Warning light Whelen ION series Super LED (2) red and (1) white with clear lens. Location: [#LOC].	$847
5600-0321	Mars 888 pedestal mounted traffic clearing light located one each side of cab outboard above the outer quad bezel on contoured pedestal brkt. Lens color: clear.	$2,087
5600-0322	Warning light Whelen M7D series Linear Super LED (PR) split red/clear with clear lens. Location: [#LOC].	$709
5600-0326	Whelen red TIR3 LED light heads (2). Locate in rear tailboard, one (1) each side below the tail lights.	$266
5600-0327	Warning light Whelen Dominator series LED model D880000 red with clear lenses. Location: [#LOC]. Wire through lower level warning.	$842
5600-0328	Warning light Whelen M7 series Linear Super LED (PR) white light with clear lens. Location: [#LOC].	$620
5600-0330	Warning light Federal Signal IMPAXX model IPX602-R red LED w/ bezel (PR). Surfaced mounted with red lens. Location: [#LOC].	$432
5600-0331	Federal Signal Vision LED rotating beacons model VSLR-R with red LED warning light(s) and red lenses (Requires additional rear facing warning lights for NFPA compliance). Location: [#LOC].	$1,617
5600-0332	Mars 888 pedestal mounted traffic clearing light located (1) each side of cab outboard above the outer quad bezel on contoured pedestal bracket. Driver side red, officer side clear.	$2,087
5600-0333	Warning light Whelen M9 series Super LED (PR) red driver, amber officer. Location: [#LOC].	$1,266
5600-0334	Warning light Whelen IONWR series Super LED red in color. Location: [#LOC].	$582
5600-0336	Warning light Roto Ray LED with (1) red, (1) amber and (1) clear lights. Locate on front of cab center above grille.	$2,570
5600-0338	Warning light Whelen M9 series Super LED (PR) red officer, amber driver. Location: [#LOC].	$1,266
5600-0339	Warning light Whelen 600 series Super LED (PR). Red officer, blue driver surface mounted with weatherproof connector. Location: [#LOC].	$558
5600-0340	Warning light Whelen M6 series Linear Super LED (PR) red driver, blue officer. Location: [#LOC].	$639
5600-0341	Warning light Whelen 600 series split Super LED (PR) red/blue with clear lens. Location: [#LOC].	$725
5600-0342	Whelen beacon with LED upper beacon and 700 series Super LED (PR) Model B6LED with blue driver and amber officer domes and [#COL] LEDs. Location [#LOC].	$2,650
5600-0343	Whelen red TIR3 LED light heads (2). Locate in rubrail below pump module offset forward.	$266
5600-0345	Warning light Federal Signal IMPAXX LED model IPX300-4 w/ bezel (PR). Surfaced mounted red LEDs with clear lens. Location: [#LOC].	$296
5600-0347	Warning light Whelen 900 series Super LED blue driver, amber officer. Location: [#LOC].	$1,100
5600-0350	Hazard (door ajar) light Whelen Vertex red LED model VTX609R w/chrome bezel. Location: [#LOC].	$239
6100-0015	Aerial boom 50' Mid-Mount. Includes monitor, rescue ladder, split steps at tip and jack leg flood lights.	$131,348
6100-0022	Mounting - 65' Snozzle torque box and aerial. Includes PTO, hyd pump, pump brkt, pump shaft, hyd hoses, water tank pass-thoughs for boom suport, and boom support for Snozzle supplied boom support bracket.	$8,663
6000	**Aerial Device**	
6150-0001	Aerial hydraulic filter isolation kit.	$344
6150-0003	Gauge aerial hydraulic oil level. Electronic display to be located [#LOC].	$529
6350-0003	Waterway drain for RLP/HDT/Snozzle.	$458
6350-0005	Rear 4" NST waterway inlet for rear mounted aerials. Includes chrome cap.	$927
6350-0006	2.5" Waterway Class 1 pressure gauge 30-0-600. Locate next to waterway inlet.	$179
6350-0007	3.5" Waterway Class 1 pressure gauge. Locate next to waterway inlet.	$202

6350-0009	Right side 4" NST waterway inlet for Mid-Mount Boom or Platform. Includes chrome cap.	$1,352
6350-0010	Flowminder with single readout and totalizer for the aerial waterway to be located at the aerial control station.	$2,260
6350-0022	Relief valve Akron model 59 for Snozzle waterway.	$595
6350-0050	2.5" Pressure Gauge Dual Read (30-0-600 psi/100-0-4140 KPA). Locate next to waterway inlet Color: [#COL].	$178
6350-0057	Rear 5" NST waterway inlet for rear mounted high flow aerials. Piping to run on top of torque box and "Y" into waterway pipe below swivel. Includes chrome cap.	$1,420
6350-0058	Rear 5" NST waterway inlet for rear mounted aerials. Includes chrome cap. Requires TB with 5" wway pipe.	$1,420
6350-0060	3.5" Waterway Class 1 pressure gauge. Locate next to waterway inlet. Color: [#COL].	$218
6500-0019	Axe bracket mounted on aerial. For use with a 6 lb. axe only. Location: [#LOC].	$400
6500-0035	Piercing nozzle for Snozzle - Snozzle supplied.	$8,864
6500-0045	Handrails 50' boom - folding. Lowers travel height approx 7.5". Includes switch and wiring to hazard light in cab.	$5,978
6500-0074	Axe bracket mounted on aerial. For use with a 8 lb axe only. Location: [#LOC].	$519
6550-0004	Whelen strobe lights at ladder tip (PR) with [#COL] lenses. Switched with aerial master.	$961
6550-0020	Whelen 500 Series TIR6 Super-LED lights at ladder tip (PR) with red lenses. Switched with aerial master.	$754
6550-0021	Outrigger warning lights (PR) Trucklite model 21 LED in rubrail.	$142
6550-0024	Outrigger warning lights (PR) Trucklite model 21 LED in rubrail.	$142
6550-0030	Whelen M6J Super LED red/blue warning lights (4) with clear lenses. Located down low across front of platform wired to upper level lights.	$1,465
6550-0031	Whelen M6J Super LED split red/blue warning lights on platform (PR) with clear lenses. The lights shall be switched with aerial master and located one each on platform.	$700
6550-0042	Warning light Whelen Dominator Plus model DP4ARAR with (4) LINZ6 LEDs Amber, Red, Amber, Red. Location: [#LOC]. The light shall be switched with emergency lighting.	$1,058
6550-0048	Whelen VTC6R Vertex Super-LED lights at ladder tip (PR). Red with clear lenses and chrome bezels. Switched with aerial master.	$502
6550-0050	Whelen 500 Series TIR6 Super-LED lights at ladder tip (PR) red with clear lenses. Switched with aerial master.	$754
6560-0002	Spot light 12V located [#LOC].	$397
6560-0003	Flood light 12V located [#LOC].	$397
6560-0004	Collins light FX-12 located [#LOC].	$512
6560-0005	Flood lights Unity at base (PR).	$464
6560-0006	Collins light FX-12 at base (PR).	$1,121
6560-0012	Quartz light 750W Magnafire model KR636-S. Requires 110-volt receptacle at tip option. The light shall be located [#LOC].	$1,011
6560-0018	Quartz light Fire Research Focus 750W/110V model FCA570-S75-ON without pole. The light shall be located [#LOC].	$1,112
6560-0019	Quartz light Fire Research Optimum 750W/110V model OPA570-S75-ON without pole. The light shall be located [#LOC].	$1,177
6560-0062	Fire Research Evolution 12V LED model FCA570-V15-ON without pole. The light shall be located [#LOC].	$1,905
6560-0063	Light Whelen Pioneer Plus model PFP2AC with permanent mount (ROM model KR-SB-6PFP2AC). Requires 110-volt receptacle at tip option. Location(s): [#LOC].	$1,923
6560-0064	Light Whelen Pioneer Plus PFP1AC. Model KR-SB-6PFP1AC-S. Requires 110 volt twist lock receptacle at tip option. Location(s): [#LOC].	$1,402
6560-0092	Wire guard for FRC Evolution light(s) on aerial. Location: [#LOC].	$136
6560-0093	Light Whelen Pioneer Plus model PFP2AC powder coated black with permanent mount (ROM model KR-SB-6PFP2AC) powder coated black. Requires 110-volt receptacle at tip option. Location(s): [#LOC].	$1,923
6570-0003	110V/15A twist lock receptacle at tip.	$2,562
6570-0008	Intercom aerial 2-way. Atkinson Dynamics (Federal). Speaker to be located to rear of platform on Bronto units.	$1,431
6570-0015	110V/20A twist lock receptacle at tip.	$2,562
6570-0025	DVD 2-Channel recorder for Snozzle cameras. Location: [#LOC].	$4,907
6570-0040	110V/30A twist lock receptacle at tip.	$2,659
6570-0042	120V/250V 20A Daniel Woodhead Non-NEMA model 67W08 receptacle at tip.	$2,919
6750-0000	Aerial sign plates 10 x 144 (PR). Available on Booms, HP75 and HP100 only. Does not include lettering. Color: [#COL].	$1,391
6750-0005	Aerial sign plate 9 x 266 - Snozzle supplied. Right side of booms only. Does not include lettering. Color: [#COL]	$879
6850-0002	Pump panel control station. HP75 / HP78 and 50' rear mount boom.	$3,288
6900-0000	Aerial flow test - 3rd party.	$413
6900-0002	Aerial 2009 NFPA Certification.	$3,325
6900-0005	Aerial flow test - 3rd party.	$413
6900-0006	Aerial flow test - 3rd party.	$413

7000	Loose Equipment	
7600-0005	Pike Pole Fiberglass 6'.	$127
7600-0006	Pike Pole Fiberglass 8'.	$84
7600-0007	Pike Pole Fiberglass 10'.	$161
7600-0009	Pike Pole Mounting Tube Style (Each)	$203
7600-0016	Wheel chocks 44" NFPA complaint, pair (PR) of Zico SAC-44. Up to 44" diameter tires. Includes mounting brackets.	$480
7700-0004	Hard suction hose 6" with Pyrolite couplings.	$967
7700-0006	Booster hose 100' long, 1" 800 PSI.	$630
7700-0012	Hard suction hose 5" with Pyrolite couplings.	$709
7700-0019	Booster Hose 50' Length 75" 800PSI	$367
7700-0020	Booster hose, 100' length of 3/4", 800 PSI.	$528
7700-0021	Booster Hose 50' Length 1" 800 PSI.	$410
7700-0022	Booster Hose 50' x 1" Reeltex (Each) Niedner Reeltex fabric booster hose with couplings.	$410
7700-0023	Booster Hose 100' x 1" Reeltex (Each) Niedner Reeltex fabric booster hose with couplings.	$630
7800-0000	8' Folding Ladder	$282
7800-0002	Alco-Lite FL-10, 10' folding ladder without shoes.	$235
7800-0003	10' folding Duo-Safety 585-A ladder.	$368
7800-0004	Aluminum Cast Bracket for Duo Safety Folding Ladder - For 8' or 10'	$391
7800-0006	Alco-Lite PRL-12 Roof Ladder	$376
7800-0007	Alco-Lite PRL-14' roof ladder.	$401
7800-0008	14' roof ladder, Duo-Safety 775-A.	$555
7800-0009	Duo-Safety 16' 875-A roof ladder.	$429
7800-0010	Alco-Lite PRL-16' roof ladder.	$481
7800-0013	Alco-Lite AEL-12 Attic Extension Ladder	$500
7800-0014	Alco-Lite PEL-16 Extension Ladder	$651
7800-0016	Alco-Lite PEL-24' 2-section extension ladder.	$821
7800-0017	Alco-Lite PEL3-24 Extension Ladder	$1,183
7800-0018	Extension ladder, Duo-Safety 900-A, 24' 2-section.	$881
7800-0019	Vertical Ladder Bracket	$416
7800-0021	Alco-Lite PEL-28' extension ladder.	$1,065
7800-0022	Alco-Lite PEL-30 Extension Ladder	$1,146
7800-0023	Alco-Lite PEL3-35' 3-section extension ladder.	$1,449
7800-0024	Alco-Lite PEL-35' extension ladder.	$1,323
7800-0025	Duo-Safety 1225-A 35' 3-section extension ladder.	$1,468
7800-0027	Little Giant model 17 ladder.	$673
7800-0028	Alco-Lite PEL-14 14' 2-Section Extension Ladder.	$630
7800-0031	Little Giant Model 22 ladder.	$637
7800-0032	Alco-Lite FL-10, 10' folding ladder w/safety shoes.	$235
7800-0033	Duo-Safety 20' 2-section extension ladder 900-A.	$896
7800-0037	Ladder Extension Duo-Safety 3-Section 35 Foot Model 1225-A with a Wellington Puritan #G5732S0600K02 Halyard.	$1,417
7800-0039	Duo-Safety 1225-A 30' 3 Section Extension Ladder	$1,348
7800-0040	Alco-Lite PEL3-28 Extension Ladder	$1,249
7800-0041	Duo-Safety 1200-A, 28' 2-section extension ladder.	$1,082
7800-0043	Duo-Safety 12' 775-A Roof Ladder	$368
7800-0044	Alco-Lite PEL-12 Extension Ladder	$552
7800-0045	Duo-Safety 1200-A 35' 2 Section Extension Ladder	$1,359
7800-0047	Duo-Safety 925-A 26' 3 Section Extension Ladder	$979
7800-0053	Alco-Lite AEL-14 Attic Extension Ladder	$563
7800-0062	Alco-Lite PRL-10 Roof Ladder.	$350
7800-0065	Duo-Safety 24' 2-Section YGE-2 Fiberglass Extension Ladder	$1,260
7800-0066	Duo-Safety 14' YGR Fiberglass Roof Ladder.	$649
7800-0069	Alco-Lite PEL3-35P Extension Ladder w/Stay Poles.	$1,533
7800-0076	Duo-Safety 1200-A 35' 2 Section Extension Ladder. Special custom length ladder 1" shorter than standard in closed position.	$1,359
7800-0077	Duo-Safety 925-A 22' 3 Section Extension Ladder	$960
7800-0078	Alco-Lite FL-10, 10' folding ladder without shoes and handles.	$235
7800-0080	Aluminum Cast Bracket for Alcolite Folding Ladder - For 8' or 10'	$391
7900-0010	Chrome Barrel Strainer 6" NST.	$315
7900-0011	Strainer Bracket 6"	$97
7900-0014	DOT Required Drive Away Kit - Kit includes three (3) triangular warning reflectors with carrying case. This kit is for the end user and is to remain with the truck.	$26
7900-0046	Goodyear front spare tire assembly with aluminum wheel to match front tire / wheel specification.	$1,865
7900-0047	Goodyear rear spare tire assembly with aluminum wheel to match rear tire / wheel specification.	$1,613
7900-0048	Michelin front spare tire assembly with aluminum wheel to match front tire / wheel specification.	$1,691
7900-0049	Michelin rear spare tire assembly with aluminum wheel to match rear tire / wheel specification.	$1,512

7900-0050	Goodyear front spare tire assembly with steel wheel to match front tire specification.	$1,351
7900-0051	Goodyear rear spare tire assembly with steel wheel to match rear tire specification.	$1,090
7900-0052	Michelin front spare tire assembly with steel wheel to match front tire specification.	$1,276
7900-0053	Michelin rear spare tire assembly with steel wheel to match rear tire specification.	$977
7900-0100	A 9000 lb Warn multi-mount (portable) electric reversible winch with 125' of 5/16'' galvanized aircraft type cable and a replaceable clevis hook shall be installed and shall be controlled with a 12' remote control switch.	$1,653
7900-0101	Medical glove box. Shipped loose. Includes slotted top for dispensing gloves without opening hinged lid. Box to be same color as interior of cab. Secure lid in closed position with small butterfly latch.	$232
7900-0156	Multiplex adapter kit. Includes 6' harness with 9 pin plug/Deutsch ends and a USB to CAN interface module.	$273
7900-0181	Removable Speedlay Tray(s). The floor of the tray(s) to be slotted to prevent the accumulation of water and allow for ventilation of wet hose. This is in addition to the standard speedlay trays and are to be shipped loose.	$544
7900-0182	Removable Poly Speedlay Tray(s). The floor of the tray(s) to be slotted to prevent the accumulation of water and allow for ventilation of wet hose. This is in addition to the standard speedlay trays and are to be shipped loose.	$498
8000	**Painting, Striping, Lettering**	
8100-0065	Paint chassis frame rails, springs, cross-members, fire pump, drivelines, fuel and air tanks, axles, front bumper extensions with brackets and front suction piping (if applicable) shall be painted: [#COL].	$1,729
8100-0070	Paint valve ends job color.	$440
8100-0071	Undercoating E-ONE.	$269
8100-0072	Touch up paint, (1) pint. Dupont paint job color.	$85
8100-0084	All applicable pump/pre-connect application modules are to have a job color finish. Includes upper and lower pump modules, crosswalk module and/or speedlay/pre-connect module (as applicable). Rear mounted body/pump module to be painted job color.	$561
8100-0088	Painted trim stripe on chassis wheels (per axle). Color to be: [#COL].	$163
8100-0091	Paint entire front of body job color. Stainless steel bodies only.	$2,014
8100-0092	Paint entire rear of body job color. Stainless steel bodies only.	$2,014
8100-0096	Paint rear tow eye assemblies job color IPO black.	$255
8100-0097	Paint the pump job color.	$537
8100-0100	Special paint break. See sketch / drawing / photo in sales file.	$177
8100-0102	Chassis axle ends to be painted job color.	$281
8100-0108	Front wheels to be painted on the inboard side (same color as outboard side).	$290
8100-0109	Rear wheels (4) to be painted on the inboard side (same color as outboard side). Includes outboard side of the inboard wheels.	$577
8100-0115	Paint valve ends 767681EG Black.	$440
8100-0117	Paint cab/body with approved metallic paint color.	$2,543
8100-0166	Painted stripe - 12" wide and straight on front, sides and rear of cab and body. Color: [#COL]. Location: [#LOC].	$4,141
8100-0168	All rearward facing access door(s) and pump//bleeder panel(s) to be painted job color.	$858
8100-0170	Painted Stripe - 6" wide with "Z". Stripe straight on front, sides and rear of cab and body. "Z" location to be specified by customer. Color: [#COL]. Location: [#LOC].	$4,141
8100-0172	Paint body two tone color. Paint break will be just above door drip rail. DuPont paint. Color: [#COL].	$1,784
8100-0173	Paint mid-mount boom body module job color.	$882
8100-0176	Paint E-ONE chassis cab - Sikkens paint. Color: [#COL].	$5,148
8100-0177	Paint cab Sikkens two-tone. Upper area of cab to be painted [#COL].	$1,159
8100-0181	Paint body two-tone color - Sikkens paint: Color: [#COL].	$1,784
8100-0182	Paint Body - Small - For Pumpers, Rear Mounts, S/A Tankers/Wetsides and Rescues. Sikkens paint. Color: [#COL].	$1,584
8100-0183	Paint Body - Large - For Aerials, T/A Tankers/Wetsides, Rear Mounts and Rescues. Sikkens paint. Color: [#COL].	$3,924
8100-0184	Paint body stainless steel -Small. Sikkens paint. Color: [#COL].	$4,819
8100-0188	Durabak coating for all cab and body handrails.	$1,318
8100-0222	Paint all roll up door header plate(s) job color.	$728
8100-0223	The pump/ladder/hardsuction access door and recessed box for directional lightbar to be painted job color.	$284
8100-0225	Paint the pump. Color: [#COL].	$537
8100-0226	Medical cabinet exterior roll-up door two-tone paint adjustment (EA). Includes dis-assembly/re-assembly of existing two-tone roll-up door to match cab paint break.	$428
8100-0227	Standard paint process for the exterior of stainless steel bodies. Sikkens paint. Color: [#COL].	$1,584
8100-0228	FRP painted exterior panels IPO standard paint process for stainless steel bodies. Available only on stainless steel pumper bodies that have roll-up doors. Provides a credit versus the standard painting process. Sikkens paint. Color: [#COL].	-$3,413
8100-0231	Undercoating E-One chassis only.	$200

8100-0233	FRP painted exterior panels IPO standard paint process for stainless steel bodies. Available only on stainless steel rescue pumper bodies that have roll-up doors. Provides a credit versus the standard painting process. Sikkens paint. Color: [#COL].	-$3,413
8100-0361	Rear body surface to have a painted job color finish. Includes hinged doors that do not have discrete sales codes and removable panels.	$800
8100-0362	Paint body two tone color. Paint break will be just above the body compartment top. Sikkens paint. Color: [#COL].	$1,784
8100-0372	Paint cab two-tone with approved metallic flake paint color.	$635
8100-0373	Front cab grille mesh painted FLNA4001 white with [#COL] painted letters. Sales to provide detail of letters to provide.	$554
8100-0376	Side facing extrusions of pump module to have swirled finished.	$160
8100-0382	Interior of front bumper trays and running board suction trays to be painted with black Durabak. Includes driver side, officer side and center front bumper trays. Driver side and officer side running board suction trays.	$554
8100-0383	Paint Newton Dump job color.	$478
8100-0385	Outline for painted letter on cab grille (EA) - 18". CIIX cabs only. Color: [#COL].	$118
8100-0388	Chassis fuel tank to have undercoating applied prior to installation on frame.	$187
8100-0394	Paint body two-tone color. Paint break will be just above the body compartment opening. Sikkens paint. Color: [#COL].	$1,784
8100-0398	Paint swivel chute job color.	$593
8100-0401	Paint front and rear axle hubs primary job color.	$1,218
8100-0403	Black Durabak coating on fuel tank.	$381
8100-0406	Paint foam discharge and intake valves [#COL].	$440
8100-0410	Black Durabak coating on pump master drain bracket.	$43
8100-0412	Zolatone finish gray in color for the upper pump module on the officer side where the E-ONE logo is mounted.	$171
8100-0416	Front cab grille mesh painted with the waving United States flag.	$1,418
8100-0421	Paint air conditioning condenser color: [#COL].	$726
8100-0424	Front cab grille mesh painted with the waving Maryland flag.	$1,418
8100-0426	The driver and officer side roof top compartment interiors shall be painted Scorpion Black (smooth finish).	$536
8100-0428	FRP painted upper side sheet exterior panels IPO standard paint process for stainless steel bodies. Available only on stainless steel tanker bodies that have lower hinged doors and painted body. Provides a credit versus the standard painting process. Sikkens paint. Color: [#COL].	-$1,222
8150-0012	The interior of the backboard storage compartment to be painted OTO gray. Includes inside surfaces of backboard doors and upper cover plate.	$561
8150-0021	The interior of the backboard storage compartment to be painted Zolatone gray. Includes inside surfaces of backboard doors and upper cover plate.	$561
8200-0000	Scotchlite Letter (Each) - 3". Color [#COL].	$8
8200-0001	Scotchlite Letter (Each) - 6". Color [#COL].	$9
8200-0002	Scotchlite Letter (Each) - 9". Color [#COL].	$10
8200-0003	Scotchlite Letter (Each) - 12". Color [#COL].	$10
8200-0004	Scotchlite Letter (Each) - 15". Color [#COL].	$12
8200-0005	Scotchlite Letter (Each) - 18". Color [#COL].	$14
8200-0006	Maltese cross 12" (Pair).	$1,039
8200-0007	Sign Gold Letter (Each) - 3"	$11
8200-0008	Sign Gold Letter (Each) - 6"	$17
8200-0009	Sign Gold Letter (Each) - 9"	$26
8200-0010	Sign Gold Letter (Each) - 12"	$26
8200-0011	Scotchlite Letters (60) - 3". Color [#COL].	$700
8200-0012	Sign Gold Letters (60) - 3".	$1,019
8200-0013	Shade for lettering.	$3
8200-0014	Sign "Stay Back 500FT" with black reflective lettering. Locate below rear of body.	$122
8200-0015	White reflective tape on (2) outriggers.	$200
8200-0018	Scotchlite Letters (90) - 3". Color [#COL].	$874
8200-0019	Scotchlite Letters (120) - 3". Color [#COL].	$1,047
8200-0020	Sign Gold Letters (90) - 3".	$1,355
8200-0021	Sign Gold Letters (120) - 3".	$1,689
8200-0022	Shade and outline for lettering.	$4
8200-0024	Reflexite Letter (Each) - 18". [#COL] Reflexite letter(s) stitched to vinyl hosebed cover end flap.	$60
8200-0025	Reflexite Letter (Each) - 6". [#COL] Reflexite letter(s) stitched to vinyl hosebed cover end flap.	$34
8200-0026	Die cut letter in stripe (EA).	$23
8200-0027	Scotchlite Letter (Each) - 5". Color [#COL].	$9
8200-0028	Sign Gold Letter (Each) - 5"	$17
8200-0029	Scotchlite Letter (Each) - 10". Color [#COL].	$11
8200-0030	Sign Gold Letter (Each) - 10"	$26
8200-0031	Scotchlite Letter (Each) - 30". Color [#COL].	$18

8200-0032	Scotchlite letter each 24" [#COL].	$16
8200-0033	Scotchlite letter (each) - 8". Color [#COL].	$11
8200-0036	Scotchlite Letter (Each) - 4". Color [#COL].	$8
8200-0038	Reflexite Letter (Each) - 12". [#COL] Reflexite letter(s) stitched to vinyl hose bed cover end flap.	$47
8200-0039	Maltese Cross SignGold up to 18'' dia (PR) with new layout.	$937
8200-0040	Gold leaf letters (90) - 3".	$3,384
8200-0042	Gold leaf lettering and corner scroll package. Package contains (112) 3" gold leaf letters and (4) E-One style golf leaf corner scrolls. Corners scrolls located on forward upper corners of L3/R3 doors and rearward upper corners of L5/R5 doors.	$4,217
8200-0044	Reflexite Letter (Each) - 8". [#COL] Reflexite letter(s) stitched to vinyl hosebed cover end flap.	$39
8200-0045	Gold leaf letters (120) - 3".	$3,939
8200-0046	Scotchlite Letter (Each) - 27". Color [#COL].	$17
8200-0047	Sign Gold Letter (Each) - 4"	$13
8200-0048	Sign Gold Letters (120) - 4".	$2,078
8200-0052	Sign Gold Letter (Each) - 8"	$26
8200-0056	Reflexite Letter (Each) - 8". White Reflexite letter(s) stitched to vinyl hosebed cover end flap and top of hosebed cover. Lettering Instructions: NMFD E-2	$39
8200-0061	Scotchlite Letter (Each) - 2". Color [#COL].	$6
8200-0068	Painted letter on cab grille (EA) - 18". CIIX cabs only. Color: [#COL].	$118
8200-0070	Scotchlite Letter (Each) - 1.25". Color Black. To read: VIST OUR WEB SITE AT: WWW.PALMHARBORFD.COM	$5
8200-0072	Reflexite Letter (Each) - (6) 12" and (1) 14". Yellow Reflexite letter(s) stitched to vinyl hosebed cover end flap. The 12" letters to read "ENGINE" with 14" letter "1" split between "ENG" and "INE".	$48
8200-0073	Sign Gold Letter (Each) - 3". Sign Gold to be small turn style.	$14
8200-0074	Maltese Cross SignGold up to 15" dia (PR) with new layout.	$754
8200-0075	Reflexite Letter (Each) - 10". [#COL] Reflexite letter(s) stitched to vinyl hose bed cover end flap.	$43
8200-0079	Reflexite Letter (Each) - 4". White Reflexite letter(s) stitched to vinyl hosebed cover end flap. Lettering Instructions: ANCRAM 79-1	$29
8200-0081	Etched Vinyl Letter (Each) - 5"	$17
8200-0084	Scotchlite Letter (Each) - 1". Color [#COL].	$6
8200-0086	Sign Gold Letter (Each) - 16".	$32
8200-0088	Gold leaf letter (Each) - 4".	$62
8200-0089	Gold leaf letters (EA) - 3".	$38
8300-0002	NFPA Scotchlite Stripe - 4" wide and straight on front/sides of cab and sides/rear of body. Color: [#COL]. Location: [#LOC].	$668
8300-0003	NFPA Scotchlite Stripe - 6" wide and straight on front/sides of cab and sides/rear of body. Color: [#COL]. Location: [#LOC].	$676
8300-0006	NFPA Scotchlite Stripe - 6" wide with "Z". Stripe straight on front, sides and rear of cab and body. "Z" location to be specified by customer. Color: [#COL]. Location: [#LOC].	$1,070
8300-0008	NFPA Scotchlite Stripe - 5" wide with "S". Stripe straight on front, sides and rear of cab and body. "S" location to be specified by customer. Color: [#COL]. Location: [#LOC].	$1,194
8300-0009	NFPA Scotchlite Stripe - 5" wide with double "S". Stripe straight on front, sides and rear of cab and body. Double "S" locations to be specified by customer. Color: [#COL]. Location: [#LOC].	$1,462
8300-0011	Scotchlite stripe (PR) 1/2" located 1/2" above and below existing stripe. Color: [#COL].	$498
8300-0012	Scotchlite stripes (4) 1/2" located (2) above and (2) below existing stripe. Stripes to be spaced 1/2" apart. Color: [#COL].	$990
8300-0013	NFPA Scotchlite Stripe - 2" and 4" wide with "Z". Stripe straight on front, sides and rear of cab and body. "Z" location to be specified by customer. 2" above 4" with 1" gap between stripes. Color: [#COL]. Location: [#LOC].	$1,512
8300-0016	Paint Break Sign Gold Chassis Stripe - 3/4" Wide - Black, Gold, Black. To be located above existing paint break.	$348
8300-0018	Sign gold scroll for body door with shade (Ea). Location: [#LOC]	$164
8300-0019	Sign gold scroll for body door (Ea). Location: [#LOC]	$53
8300-0024	Red/White rubrail scotchlite insert.	$193
8300-0025	1/4" Pin stripe above and below existing Scotchlite stripe. Color: [#COL].	$798
8300-0026	Scotchlite stripe 1" located 1" above and below existing stripe. Color: [#COL].	$596
8300-0027	NFPA Scotchlite 4" wide hockey stripe, straight across front and may contour as it transitions from cab to body on each side. Color: [#COL]. Location: [#LOC].	$804
8300-0028	NFPA Scotchlite 6" wide hockey stripe, straight across front and may contour as it transitions from Cab to Body on each side. Color: [#COL]. Location: [#LOC].	$811
8300-0030	NFPA Scotchlite 10" wide hockey stripe, straight across front and may contour as it transitions from Cab to Body on each side. Color: [#COL]. Location: [#LOC].	$1,085
8300-0032	Chevron "A" style 4" Scotchlite striping on rear of body. Includes rear facing extrusions, panels and doors inboard/outboard of the beavertails(if applicable). Colors to be [#COL].	$3,161
8300-0033	NFPA Scotchlite Stripe - 8" wide and straight on front/sides of cab and sides/rear of body. Color: [#COL]. Location: [#LOC].	$836
8300-0034	Scotchlite stripe 2" located 1" above existing stripe. Color: [#COL].	$378

8300-0036	NFPA Scotchlite Stripe - 8" wide with "S". Stripe straight on front, sides and rear of cab and body. "S" location to be specified by customer. Color: [#COL]. Location: [#LOC].	$1,357
8300-0037	Chevron "V" style 4" Scotchlite striping on rear of body. Includes rear facing extrusions, panels and doors inboard/outboard of the beavertails(if applicable). Colors to be [#COL].	$3,161
8300-0038	Scotchlite stripe 2" located 1" above and below existing stripe. Color: [#COL].	$756
8300-0039	Scotchlite stripe 1" located .5" above and below existing stripe. Color: [#COL].	$630
8300-0040	Signgold border .5" for logo.	$406
8300-0041	Sign gold scroll (14) for body doors with connecting .5" sign gold stripe.	$2,313
8300-0043	NFPA Scotchlite double 2" wide hockey with 1" between stripes, straight across front and may contour as it transitions from Cab to Body on each side. Color: [#COL]. Location: [#LOC].	$2,171
8300-0044	Scotchlite stripe 1" located 1" above existing stripe. Color: [#COL].	$315
8300-0045	1/4" pinstripe. Color: [#COL]. Location: At cab paint break	$175
8300-0046	Scotchlite stripe (PR) 1/2" located directly above and below existing stripe. Color: [#COL].	$625
8300-0048	Paint break Scotchlite chassis stripe - 3/4" Wide - Black, [#COL], Black. To be located above existing paint break.	$608
8300-0049	Signgold body scroll package. (1) each upper corner L1, L3, R1, R3 and (1) each lower corner L2, R2 with connecting 3/4" signgold stripe. See photos on file with sales.	$2,291
8300-0050	Scotchlite stripe (PR) 1" located directly above and below existing stripe on satin roll-up doors only. Color: [#COL].	$498
8300-0051	Scotchlite hockey stripe. Striping from bottom to top with no spacing between as follows: 1" white, 1/4" blue, 5.75" white, 1/4" black, 1/8" gold, 1/4" black, 1.375" white fading to blue at front cab corners, 1/2" black, 1/2" white. Location: bottom of stripes even with top of gravel shield; hockey at L1/R1.	$4,742
8300-0052	Chevron "V" style Scotchlite striping on rear of body outboard of beavertails (if equipped). Colors to be [#COL].	$937
8300-0053	Signgold body scroll package. (1) front lower corner L2 and (1) rear lower corner L5 with connecting 3/4" signgold stripe. (4) R1 (each corner) with connecting 3/4" signgold stripe. (1) R2 lower front corner and (1) R5 lower rear corner with connecting 3/4" signgold stripe.	$1,421
8300-0056	Chevron "A" style 4" individual Scotchlite striping on front bumper. Colors to be [#COL].	$1,306
8300-0057	Arched stripe 6"/2" on front cab door and blend into a straight body stripe. Includes stripe on front bumper. Color: [#COL]	$2,171
8300-0058	Chevron "V" style 4" Scotchlite striping on rear B1 compt door, (3) stripes. Colors to be red/white/black pinstripe.	$819
8300-0059	NFPA Scotchlite Stripe - 10" wide and straight on front, sides and rear of cab and body. Color: [#COL]. Location: [#LOC].	$1,101
8300-0060	Scotchlite Stripe - 5" wide straight on front front of cab below windshield end at radius corners. Color: [#COL].	$222
8300-0061	Chevron "A" style 6" individual Scotchlite striping on rear of body. Includes rear facing extrusions, panels and doors inboard/outboard of the beavertails(if applicable). Colors to be [#COL].	$1,668
8300-0062	Chevron "A" style Scotchlite striping on rear of body outboard of beavertails (if equipped). Colors to be [#COL].	$937
8300-0063	Scotchlite Stripe - Quest Demo. Includes large "Quest" letters that are arched to match cab window line with triple stripe along body. Includes straight stripe on front and rear of apparatus for NFPA compliance. Color: [#COL].	$2,267
8300-0066	NFPA Scotchlite Stripe - 4" wide with "Z". Stripe straight on front, sides and rear of cab and body. "Z" location to be specified by customer. Color: [#COL]. Location: [#LOC].	$1,061
8300-0067	Chevron "A" style 4" Scotchlite striping on rear of body outside of beavertails. Colors to be [#COL].	$1,306
8300-0068	NFPA Scotchlite Stripe - 10" wide with "S". Stripe straight on front, sides and rear of cab and body. "S" location to be specified by customer. Color: [#COL]. Location: [#LOC].	$3,471
8300-0070	Chevron "A" style 4" Scotchlite striping on rear of body between beavertails. Colors to be [#COL].	$1,798
8300-0071	Paint break Scotchlite chassis stripe - 3/4" Wide - [#COL]. To be located above existing paint break.	$608
8300-0072	NFPA Scotchlite Stripe - 10" wide with "Z". Stripe straight on front, sides and rear of cab and body. "Z" location to be specified by customer. Color: [#COL]. Location: [#LOC].	$1,828
8300-0075	Sign gold scroll (4 ea side) for body with connecting .75" sign gold body stripe.	$1,998
8300-0076	Chevron "A" style 4" Scotchlite striping on rear of body between beavertails; body panels and extrusions only (No doors). Colors to be [#COL].	$1,006
8300-0077	Chevron "A" style Scotchlite striping on rear B1 compt door. Colors to be [#COL].	$1,582
8300-0078	Chevron "A" style 4" 3M "Diamond Grade" striping on rear of body. Includes rear facing extrusions, panels and doors inboard/outboard of the beavertails(if applicable). Colors to be [#COL].	$3,952
8300-0079	Chevron "A" style 4" 3M "Diamond Grade" striping on rear pump panel/bleeder panel(s). Colors to be [#COL].	$660
8300-0080	Chevron "A" style 4" 3M "Diamond Grade" striping on front bumper. Colors to be [#COL].	$1,632
8300-0081	Chevron "A" style 3M "Diamond Grade" striping on rear of body outboard of beavertails (if equipped). Colors to be [#COL].	$1,172
8300-0084	Chevron "A" style 6" printed sheet Scotchlite striping on rear of body. Includes rear facing extrusions, panels and doors inboard/outboard of the beavertails (if applicable). Colors to be [#COL].	$1,301
8300-0085	Scotchlite stripe 1" located directly above and below existing stripe. Color: [#COL].	$596

8300-0088	NFPA Scotchlite Stripe - 4" wide and straight on sides and rear of body only. Color: [#COL]. Location: [#LOC].	$736
8300-0089	Gold leaf scroll and stripe package. Includes 3/4" stripes w/outline vertically on forward L1/R1 and rearward on L3/R3 body doors with connecting horizontal stripe on upper doors. Stripes to end with spear above scotchlite stripe. Custom scrolls over L2/R2 d-rings and front cab doors. 3/4" chassis stripe w/outline, custom scrolls rearward and spear forward. See photos on file with sales.	$4,786
8300-0090	Scotchlite stripe 1.5" located directly above and below existing stripe. Color: [#COL].	$632
8300-0091	1/4" Scotchlite pinstripe above and below existing stripe. Color: [#COL].	$911
8300-0093	Chevron "A" style 6" printed sheet Scotchlite striping on front bumper. Colors to be [#COL].	$536
8300-0094	Chevron "A" style 4" Scotchlite striping on rear body panels only, no extrusions. Colors to be [#COL].	$2,372
8300-0095	Sign Gold cab and body stripe - 3/4" wide - Black, Gold, Black. To be located at lower cab and body sides and contour over wheel wells (if applicable). See addtional photos on file.	$890
8300-0099	Chevron "A" style 6" printed sheet Scotchlite striping on rear of body between beavertails. Colors to be [#COL].	$1,024
8300-0101	Black rubrail scotchlite insert.	$193
8300-0102	Gold leaf scroll and stripe package. Includes 1/2" stripes around perimeter of driver and officer side assemblies with (4) corner scrolls each side in the corners. See sketch on file.	$5,314
8300-0103	Chevron "A" style 6" Scotchlite striping on rear B1 compt door. Colors to be [#COL].	$1,582
8300-0104	Chevron "V" style 3" Scotchlite striping on rear of body. Colors to be Red/White/Blue.	$3,161
8300-0109	Chevron "A" style 6" 3M "Diamond Grade" striping on rear of body. Includes rear facing extrusions, panels and doors inboard/outboard of the beavertails(if applicable). Colors to be [#COL].	$3,952
8300-0111	Chevron "A" style 6" individual Scotchlite striping on rear of body except for the pump/ladder tunnel access door. Colors to be [#COL].	$3,161
8300-0112	Chevron "A" style 6" Scotchlite striping on rear facing side of the slide out room. Colors to be [#COL].	$1,582
8300-0114	Chevron "A" style 6" individual Scotchlite striping on rear of body. Includes rear facing compartment face, extrusions, panels and doors outboard of the center pump panel/pump access. Colors to be [#COL].	$1,668
8300-0115	Chevron "A" style 6" printed pattern Scotchlite striping on rear of body. Includes rear facing compartment face (as applicable), extrusions, panels and doors outboard of the center pump panel/pump access. Colors to be [#COL].	$1,301
8300-0116	Chevron "A" style 6" printed pattern Scotchlite striping on the upper center pump/storage access. Colors to be [#COL].	$406
8300-0117	Chevron "A" style 6" individual Scotchlite striping on the upper center pump/storage access. Colors to be [#COL].	$557
8300-0120	Chevron "A" style 6" 3M "Diamond Grade" striping on front bumper. Colors to be [#COL].	$1,632
8300-0123	Chevron "A" style 6" printed pattern NFPA Scotchlite striping. Provided to driver and officer rear compartment face, smooth plate panels and/or doors outboard and above the center rear compartment opening and the vertical hosebed extrusions (terminate just above the upper handrail stanchion). The vertical and horizontal extrusions inboard of the vertical hosebed extrusions shall remain visible with a sanded finish. Colors to be [#COL].	$511
8300-0125	Reflective [#COL] striping positioned in the "A" formation located in the lower door panel (EA). Location: [#LOC].	$65
8300-0126	Red/White scotchlite. Locate on front of roll-out tray(s), front lip of adjustable/fixed shelves and tool board(s) on outer vertical edge on both sides.	$389
8300-0142	Chevron "A" style 6" individual Scotchlite striping on front bumper. Colors to be [#COL].	$669
8300-0143	NFPA Scotchlite Stripe - three stripes 3" wide with "Z" with 1" gap between stripes. Stripe straight on front, sides and rear of cab and body. "Z" location to be specified by customer. Color: top stripe - Yellow, middle stripe - White, bottom stripe - Black. Location: top of bottom stripe flush with top of bumper and straight back.	$3,111
8300-0144	Chevron "A" style 6" 3M "Diamond Grade" striping on rear of body (does not include the B1 door). Includes rear facing extrusions, panels and doors inboard/outboard of the beavertails(if applicable). Colors to be [#COL].	$1,661
8300-0145	Chevron "A" style 6" 3M "Diamond Grade" striping on front bumper. Colors to be [#COL].	$793
8300-0146	Chevron "A" style 6" 3M "Diamond Grade" striping on rear of body. Includes rear facing extrusions, panels and doors inboard/outboard of the beavertails (if applicable). Colors to be [#COL].	$2,191
8300-0147	Sign Gold Stripe - 3/4" Wide - Black, Gold, Black. To be located above and below scotchlite stripe.	$1,779
8300-0148	Sign gold scroll (4 ea side) for body with connecting .75" sign gold body stripe and white painted pin stripe.	$2,785
8300-0150	Chevron "A" style 6" printed sheet Scotchlite striping on rear of body. Includes rear facing extrusions, panels and doors inboard/outboard of the beavertails (if applicable). Colors to be [#COL].	$1,132
8300-0152	Chevron "A" style 6" 3M "Diamond Grade" Scotchlite striping on rear of body. Includes rear facing compartment face, extrusions, panels and doors outboard of the center pump panel/pump access. Colors to be [#COL].	$2,191
8300-0153	Chevron "A" style 6" 3M "Diamond Grade" Scotchlite striping on the upper center pump/storage access. Colors to be [#COL].	$692

8300-0154	Chevron "A" style 6" 3M "Diamond Grade" striping on rear of body. Includes rear facing extrusions, panels and doors inboard of the beavertails(if applicable). Colors to be [#COL].	$1,916
8300-0155	NFPA Scotchlite Stripe - 4" wide with ribbon style "Z". Stripe straight on front, sides and rear of cab and body. "Z" location to be specified by customer. Color: [#COL]. Location: [#LOC].	$1,070
8300-0159	Red/Yellow scotchlite. Locate on front of roll-out tray(s), front lip of adjustable/fixed shelves and tool board(s) on outer vertical edge on both sides.	$389
8300-0160	Chevron "A" style 6" printed sheet Scotchlite striping on front and rear faces of overhead ladder rack. Colors to be [#COL].	$379
8300-0161	NFPA Scotchlite stripe. Pasco County double half "S" stripe with 1" black, 1/2" white, 4" red, 1/2" white. See photos on file with sales.	$1,959
8300-0162	Scotchlite stripe 1" located 1" below existing stripe. Color: [#COL].	$315
8300-0165	Chevron "A" style 6" printed sheet Scotchlite striping on outer panel of beavertails. Colors to be [#COL].	$402
8300-0167	White Diamond Grade Scotchlite. Locate on front of roll-out tray(s), front lip of adjustable/fixed shelves and tool board(s) on outer vertical edge on both sides.	$389
8300-0169	NFPA Scotchlite Stripe - 6" wide with "Z". Stripe straight on front, sides and rear of cab and body. "Z" location to be specified by customer. Color: White on cab and body / Ruby Red on body doors. Location: bottom of stripe flush with top of bumper and straight back.	$1,070
8300-0179	Chevron "A" style 6" printed sheet Scotchlite striping on rear of body. Includes rear facing extrusions, panels, inboard/outboard of the beavertails (if applicable). Does not include the rear door(s). Colors to be Yellow/Red.	$1,074
8300-0181	Paint Break Sign Gold Chassis Stripe - 3/4" Wide - Black, Gold, Black. Sign Gold to be small turn style. To be located above existing paint break.	$469
8300-0183	NFPA Scotchlite Stripe - 1"/1"/.25"/4"/.25"/1"/1" wide with "Z". Stripe straight on front, sides and rear of cab and body. "Z" location to be specified by customer. Lower portion of stripes will continue rearward after "Z". There will be a 1/4" gap between stripes. Color: Blue/White/Blue/White/Blue/White/Blue. Location: bottom of stripe flush with top of bumper and straight back.	$3,032
8300-0186	NFPA Scotchlite Stripe - 2" and 6" wide with "Z". Stripe straight on front, sides and rear of cab and body. "Z" location to be specified by customer. 2" above 6" with 1" gap between stripes. 6" stripe to have a .25" outline above and below. Color: [#COL]. Location: [#LOC].	$1,512
8300-0189	Scotchlite striping on front bumper 6". Color to be [#COL].	$669
8300-0190	Chevron "A" style 6" 3M "Diamond Grade" striping on rear of body (does not include the B1 door). Includes rear facing extrusions, panels and doors inboard/outboard of the beavertails(if applicable). Colors to be [#COL].	$1,661
8300-0191	Paint break Scotchlite chassis stripe - 1/4" Wide - [#COL]. To be located above existing paint break.	$435
8300-0192	NFPA Scotchlite Stripe - 8" and 3" wide with "Z". Stripe straight on front, sides and rear of cab and body. "Z" location to be specified by customer. 8" above 3" with 1.5" gap between stripes. Color: White. Location: center of stripe centered with headlight bezel and straight back.	$1,986
8300-0193	Chevron "A" style 3M "Diamond Grade" Dots in 6" striping pattern on rear of body (does not include the B1 door). Includes rear facing extrusions, panels and doors inboard of the beavertails (if applicable). Colors to be [#COL].	$2,475
8300-0194	Install dealer supplied Scotchlite pinstripe above and below existing stripe. Color: Blue.	$488
8300-0195	Sign gold .75" stripe and scroll package. Total of (5) scrolls for body (1) in each upper forward corner of L1,R1,L3 and upper rearward corner of L2,R2 with connecting stripes, side dump panels to have rearward vertical stripe, the cab to have stripe contouring the wheel wells and around front of cab. All stripes to have red scotchlite pin stripe.	$3,267
8300-0197	Scotchlite stripe 1" located 1" down from top of stripe and 1" up from bottom of stripe (1"stripes on existing stripe). Color: [#COL].	$630
8300-0198	NFPA Scotchlite Stripe - 8" wide with "Z". Stripe straight on front, sides and rear of cab and body. "Z" location to be specified by customer. Color: [#COL]. Location: [#LOC].	$1,986
8300-0199	Sign Gold Body Stripe - 1" Wide - Black, Gold, Black, located .5" above and below existing stripe.	$1,181
8300-0200	Scotchlite stripe 2" located 2" below existing stripe. Color: [#COL].	$744
8300-0201	Chevron "A" style 6" 3M "Diamond Grade" striping on ladder rack lowering arms. The Chevron shall be applied to the rear and forward arm surfaces only. Colors to be [#COL].	$311
8300-0202	Sign Gold Stripe - 1" Wide - Black, Gold, Black. To be located above and below scotchlite stripe.	$1,668
8300-0205	NFPA Scotchlite Stripe - 4" wide with double ribbon. Double ribbon locations to be specified by customer. Color: [#COL]. Location: [#LOC].	$1,462
8300-0206	Red rubrail scotchlite insert.	$193
8300-0209	NFPA Scotchlite Stripe - 10" wide with pin striping above and below. Pin striping thickness and spacing shall be as specified in shop order and straight on front, sides and rear of cab and body. Color: [#COL]. Location: [#LOC].	$1,391
8300-0210	There will be reflective tape added to the front and both sides of all roll-out trays to aid in visibility. Tape will be [#COL] in color.	$995
8300-0214	Chevron "A" style 6" printed sheet Scotchlite striping stitched to vinyl hosebed cover end flap. Colors to be [#COL].	$402

8300-0216	Scotchlite 3" wide hockey stripe, straight across front and may contour as it transitions from cab to body on each side. Color: [#COL]. Location: [#LOC].	$804
8300-0217	NFPA Scotchlite Stripe - 1" and 6" wide with "Z". Stripe straight on front, sides and rear of cab and body. "Z" location to be specified by customer. 1" above 6" with 1" gap between stripes. 6" stripe to have a .25" outline above and below. Color: [#COL]. Location: [#LOC].	$1,512
8300-0218	Two-tone vinyl custom scroll (4 ea side) for body. See photos on file with sales.	$687
8300-0219	Sign Gold Body Stripe - 3/4" Wide - Gold with single Black pin stripe. Located above and below existing stripe. Top to bottom black pin stripe, sign gold, existing stripe, sign gold, black pin stripe.	$1,054
8300-0220	Paint Break Sign Gold Chassis Stripe - 1" Wide - Black pin stripe, Sign Gold, Black pin stripe. To be located above existing paint break if so equipped or at the same approximate position (when there is not a paint break).	$625
8300-0221	Sign gold scroll (Ea). Scroll detail/definition shall be defined by sales administration and or shop order file. Location: [#LOC]	$53
8300-0222	NFPA Scotchlite Stripe - 1", 4" and 1" wide with "Z". Stripe straight on front, sides and rear of cab and body. "Z" location to be specified by customer. 1" above and below 4" with 1" gap between stripes. Color: [#COL]. Location: [#LOC].	$1,512
8300-0223	NFPA Scotchlite Stripe - 6" wide with double pin stripe top and bottom. "Z" Stripe straight on front, sides and rear of cab and body. "Z" location to be specified by customer. Stripe shall be a printed sheet laid out from top to bottom as 1/4" pin stripe, 1/8" gap (wide stripe color), 1/8" pin stripe, 6" wide stripe, 1/8" pin stripe, 1/8" gap (wide stripe color), 1/4" pin stripe. Color: [#COL]. Location: [#LOC].	$1,512
8300-0224	Paint break Scotchlite chassis stripe - 1/2" Wide - [#COL]. To be located above existing paint break.	$498
8300-0225	Paint break Scotchlite body stripe - 1/2" Wide - [#COL]. To be located above existing paint break.	$709
8300-0226	Sign Gold Stripe - 3/4" Wide aerial sign plate - Gold with red pin stripe outline. The striping shall create a border around sign plate lettering.	$1,054
8300-0227	Diamond Grade reflective tape on (2) outriggers. Striping to alternate in an "A" pattern when viewed from the front or rear of the truck. Colors to be: [#COL].	$554
8300-0228	Printed reflective striping on (2) outriggers. Striping to alternate in an "A" pattern when viewed from the front or rear of the truck. Colors to be: [#COL].	$286
8300-0229	Scotchlite stripe 3" located 2" below existing stripe. Color: [#COL].	$787
8300-0230	Paint break painted on chassis stripe - 1/8" Wide - [#COL].To be located above existing paint break if so equipped or at the same approximate position (when there is not a paint break).	$1,060
8300-0232	NFPA Scotchlite Stripe - 2" and 4" wide with interlocking "Z". Stripe straight on front, sides and rear of cab and body. "Z" location to be specified by customer. 2" above 4" with 1" gap between stripes. Color: [#COL]. Location: [#LOC].	$1,512
8300-0233	NFPA Scotchlite Stripe - 1", 4" and 1" wide with triple interlocking "Z". Stripe straight on front, sides and rear of cab and body. "Z" location to be specified by customer. 2" above 4" with 1" gap between stripes. Color: [#COL]. Location: [#LOC].	$2,211
8300-0234	NFPA Scotchlite Stripe - 2" wide with "Heartbeat". Stripe straight on front, sides and rear of cab and body. "heartbeat" location to be specified by customer. Color: [#COL]. Location: [#LOC].	$1,061
8300-0239	Individual reflective tape on (2) outriggers. Striping to alternate in an "A" pattern when viewed from the front or rear of the truck. Colors to be: [#COL].	$552
8400-0000	Vision flags on canopy windows (PR).	$503
8400-0004	Install customer supplied logos on front cab doors.	$182
8400-0005	A pair of customer logos for cab supplied to E-One in a digital format.	$820
8400-0006	A pair of customer logos for body supplied to E-ONE in a digital format.	$1,637
8400-0007	Install customer supplied logos/striping. Location: Logos on front cab doors, officer side medical cabinet roll-up door and 911 logos on L4/R4. Install customer supplied 3/8" striping above and below 6" stripe and chassis stripe at paint break.	$297
8400-0008	Star of life logo 12". Location: [#LOC].	$91
8400-0009	American Flag (EA). Approx size: 7"H x 14"W. Location: [#LOC]	$104
8400-0010	Install customer logo from an existing E-ONE design (EA). Location: [#LOC]	$112
8400-0011	Vision flag on officer canopy window.	$253
8400-0012	Star of life logo 22.5". Location: [#LOC]	$181
8400-0013	Signgold Fleur de Lis 5" logo (PR) with black outline. Location: [#LOC].	$181
8400-0015	Install customer supplied logos on rear cab doors.	$182
8400-0016	A pair of Customer Logos supplied to E-One in a digital format. Location: [#LOC].	$820
8400-0017	A customer logo supplied to E-One in a digital format. Location: [#LOC].	$277
8400-0018	Star of life logo 20". Location: (1) each side centered on capony window.	$305
8400-0021	Label "NO SMOKING" with universal symbol 2"x6"; white background with red letters. Location: [#LOC].	$35
8400-0023	Install customer supplied logo. Location: [#LOC].	$63
8400-0024	Install up to 12" SignGold customer logo from an existing E-ONE design (EA). Location: [#LOC].	$167
8400-0025	A customer SignGold logo (up to 12") supplied to E-One in a digital format. Location: [#LOC].	$353
8400-0029	Reflective American Flag (PR) - wavy. Approx size: 12"H x 18"W. Location: [#LOC].	$208
8400-0032	Install dealer/customer supplied Leo's gold-Smart Silver #1: lettering, logos and body stripes/scolls.	$1,951
8400-0034	Vision flags (Canadian ribbon style) on canopy windows (PR).	$503

8400-0035	911 Tribute Vision flags on upper windows of rear cab doors (PR).	$503
8400-0036	Star of life logo 20" (PR). Location: (1) each side centered between cab doors.	$305
8400-0037	Vision flags (state of Texas ribbon style) on canopy windows (PR).	$503
9000	**Delivery, Warranty, Service**	
9100-0046	10 Year Non Prorated Paint and Perforation Warranty - For Sikkens Paint.	$4,917
9300-0000	Vehicle familiarization aerial (Domestic).	$4,332
9300-0003	Compressed air foam system training, Pneumax.	$3,022
9300-0007	Vehicle Familiar - Domestic.	$4,267
9300-0009	Manuals, Operator and Service CD-ROM.	$311
9300-0012	Pump panel approval drawings.	$361
9300-0013	Approval Drawings Revised	$180
9300-0017	Manuals Printed (Set).	$813
9300-0018	Manuals, Operator and Service CD-ROM (additional set).	$45
9300-0031	Dash panel layout approval drawings	$469
9300-0033	As built electrical and plumbing drawings.	$2,727
9300-0035	Customer late change order.	$275
9300-0040	As built electrical drawings.	$2,183
9300-0041	As built plumbing drawings.	$2,727
9300-0303	Approval Drawings - Top View of body and pump module section of the vehicle.	$246
9300-0304	Manuals printed (1).	$465
9300-0305	Advent/Hot Shot Foam System Training.	$3,854
9300-0306	Approval Drawings-Additional views. Top view of body and pump module areas. Detailed top view of the interior cab view layout.	$493

Notes:

1) Availability of options are limited by other options selected, and not all options are available in every chassis/apparatus configuration. Selection of an option may require several of the above parts/items to complete the option package.

2) Certain options, alone or in combination with other options, may require heavier axle/suspension packages, longer frames, or reinforced frames at additional cost per the above price list.

3) To configure options, the E-One State Term Schedule authorized dealer will use quote configuration software to select the components necessary to effect the option, feature, or configuration requested and quote the total option price.

Fire Apparatus Quotation for:
STATE OF OHIO TERM SCHEDULE

Quotation Number: 57490 Rev: 21

Unit Description: AERM-TYPH-075L

Quote Description: Aerial Rear Mount, Typhoon, HP75 Ladder

Salescode	Extended Description	Qty
TESTING COMPLIANCE STANDARD		
1001-0015	The E-ONE supplied components of the vehicle shall meet the requirements of NFPA 1901, 2009 edition.	1
BUMPERS		
1160-0000	Bumper 10" stainless steel.	1
1160-0011	4" Front Bumper Extension.	1
FRAME ASSEMBLY		
1250-0003	Frame 10.25 x 3.5 x .375 chassis.	1
1250-0006	Frame liner 9.375 x 3.125 x .375.	1
AXLE OPTIONS		
1025-0005	Meritor FL941 front axle 18,700 lb.	1
1025-0018	Meritor RS-30-185 single rear axle 31,000 lb. capacity.	1
1025-0028	Koni shock absorbers for front axle - adjustable.	1
SUSPENSIONS		
1070-0012	Reyco rear suspension springs rated equal to the capacity of the axle.	1
WHEEL OPTIONS		
1050-0000	Steel wheels for front axle (2).	1
1050-0002	Steel wheels for rear axle (4).	1
1050-0007	Front axle wheel trim kit. Includes stainless steel lug nut covers (chrome plated plastic if applicable) and center cap with E-ONE logo. Note: Center cap will have an inspection port IPO a logo if equipped with Stemco oil seals.	1
1050-0008	Rear axle (single) wheel trim kit. Includes stainless steel lug nut covers (chrome plated plastic if applicable) and center cap with E-ONE logo. E-ONE custom chassis w/steel wheels will have chrome plated plastic lug covers.	1
TIRE OPTIONS		

1060-0017	Four Michelin 315 rear tires with XDN2 mud and snow tread.	1
1060-0047	Two Michelin 385 tires model XFE for front axle.	1
1060-0050	Tire pressure monitoring valve stem caps.	1
BRAKE SYSTEMS		
1100-0000	16-1/2" x 6" S-cam brakes with ArvinMeritor automatic slack adjusters for front axle.	1
1100-0002	ArvinMeritor 16-1/2" x 7" S-cam brakes with cast brake drums for a single rear axle.	1
1100-0005	Brake system air 4X2/4X4.	1
1100-0006	Parking brake release mounted on the driver's side lower dash.	1
AIR SYSTEM OPTIONS		
1110-0000-001	Inlet for air system. Location: driver door jamb.	1
1110-0002	Air dryer Bendix AD-9.	1
1110-0006	Air lines nylon.	1
1110-0041	Air horns Grover recessed in bumper (PR).	1
ENGINES & TRANSMISSIONS		
1200-0017	Push-button transmission shift selector.	1
1200-0020	TransSynd synthetic transmission fluid for EVS3000.	1
1200-0097	Electronically limited speed to 68 MPH maximum. Note: Max speed may be set at 65 MPH due to tire rating.	1
1200-0235	Eng/Trans Cummins ISL 400HP/EVS3000 2013 EPA compliant engine.	1
SECONDARY BRAKING		
1125-0002	Jacobs engine compression brake.	1
COOLING PACKAGE		
1800-0013	Cooling system for use with Cyclone II X, Typhoon X, and Quest chassis. For use with 2010/2013 EPA engines. Includes coolant recovery system.	1
FUEL SYSTEMS		
1350-0003	Fuel system 50 gallon.	1
1350-0011	Fuel pump electric w/re-prime.	1
1350-0022	Fuel line hose rubber.	1
ALTERNATOR		
1700-0005	Alternator Leece Neville 320 amp. 320 amp SAE/275 amp NFPA.	1
BATTERIES		
1400-0002	Battery four group 31 1000 CCA.	1
CHASSIS OPTIONS		

1680-0005	Thermatic fan clutch.	1
1680-0006	Drivelines 1710.	1
1680-0012	Tow eyes rear frame painted.	1
1680-0042	Tow hooks front painted in the down position.	1
1680-0051	Aerial hydraulic activation system.	1
1680-0250-M58	Diesel Exhaust Fluid (DEF) 5 gallon tank for 2013 EPA engines. Location: left side below rear of cab.	1
CAB MODEL		
1520-0013	Typhoon X medium cab with 58" CA	1
CAB ROOF TYPE		
1615-0010	Cab roof to be "flat" (non-vista).	1
CAB BADGE PACKAGE		
1610-0000	Cab and body to have applicable E-ONE logos.	1
GRILLE		
1620-0004	ABS chrome plated grille.	1
CAB DOOR OPTIONS		
1550-0003	Rear crew cab doors in the medium position.	1
1550-0005	Driver and officer cab door windows. Include forward vent windows.	1
1550-0011	Rear crew cab door windows. Includes manual roll-down actuation. Not available with paddle style door latching.	1
1550-0016	Cab door panels ABS.	1
1550-0025	All cab doors shall have "L" style exterior latches.	1
1550-0027	Front cab door windows to manually roll down.	1
1550-0037-659	(4) Incandescent cab step area lighting. Locate each light in on each cab door in the inboard position. Lights to be switched with door ajar.	1
1550-0044	All cab door kick plates to be made from diamond plate aluminum.	1
1550-0059-000-72	Reflective Yellow/Red printed striping positioned in the "A" formation located in the lower cab door panels.	1
1550-0077	Interior cab door locks - manual. Will be individually actuated from each respective door. Includes barrel style key lock on each exterior cab door.	1
1550-0084	All cab exterior access doors to have 1250 keyed locks.	1
MIRRORS		
1670-0003	Velvac 2010 mirrors. Door mounted west coast style with remote control and heat.	1
MISC EXTERIOR CAB OPTIONS		
1550-0020	Windows cab side fixed driver's side.	1
1550-0033	Windows cab side fixed officer's side.	1

1675-0022	Pair of 18" handrails located just behind driver and officer front door one each side.	1
1675-0023	Pair of 18" handrails located just behind driver and officer rear door (ALS doors if equipped) one each side.	1
1675-0030	Mud flaps, front, black with E-ONE logo.	1
1675-0047	Rear cab wall to be 3/16" aluminum diamond plate.	1
HVAC		
1515-0017	Air conditioning for the Typhoon X, CII X and Quest with Cummins ISC/ISL engine, radiator mounted condenser.	1
1685-0057	Heaters rear with covers (PR), and front heater with heat to the feet for the driver and officer.	1
SEATS		
1510-0003	Seats, Inc. brand 911 cab seats.	1
1510-0007	Seat cover material vinyl.	1
1510-0008	Seat color gray.	1
1510-0035-147	Universal air pack bottle bracket (EA). Location: officer's seat.	1
1510-0035-148	Universal air pack bottle bracket (EA). Location: rear facing driver's side.	1
1510-0035-215	Universal air pack bottle bracket (EA). Location: rear facing officer's side.	1
1510-0038	Driver seat 911 air ride.	1
1510-0042	Officer seat to be 911 fixed SCBA.	1
1510-0050	Rear facing 911 seat with SCBA driver's side.	1
1510-0053	Rear facing 911 seat with SCBA officer's side.	1
1685-0031	Seating capacity tag of four occupants.	1
MISC INTERIOR CAB OPTIONS		
1685-0000	Cab interior gray. Does not include engine cover or seat color.	1
1685-0005	Lexan sun visors, driver and officer's side overhead.	1
1685-0168	ABS Dash package. Includes center and officer side dash, lower kick panels and "A" post covers.	1
1685-0187	Severe duty engine cover, molded polyurethane.	1
CAB ELECTRICAL OPTIONS		
1750-0013-172	Turn signal Whelen 600 LED amber arrow pair located upper headlight bezel.	1
1750-0029	Switch horn button two position DOT/air horn.	1
1750-0046-195	Cab Headlights. Position: lower.	1
1750-0059-179-04	Receptacle inlet 20 amp with a Yellow cover. Location: outside driver's door next to handrail.	1
1750-0072-593	12 VDC (or 24VDC) electrical outlet in the cab wired battery hot. Location: officer side dash.	2
1750-0075	English dominant main cab gauge cluster.	1
1750-0188	DPF regeneration override switch.	1

1750-0198-A31	Battery charger to be located behind driver's seat.	1
1750-0343	Battery charger E-ONE LPC 20. 120 volt inlet, 20 amp output.	1
5400-0037	Dome Lts Red/White Incandescent. Package includes two lights mounted in the front and two mounted in the rear of the cab. White light wire through door and light assembly mounted switch. Red light through light assembly mounted switch.	1
BODY MODEL		
3080-0010	Body aerial HP75 / HP78 SideStacker Quest / CII / Typhoon with pump. Single axle. Includes pocket style drop down step at left rear staircase. The rear access doors to match the rear body finish.	1
BODY COMPT REAR		
3110-0058	Rear of body to have flush un-painted smooth plate body panels to facilitate rear body striping.	1
AERIAL BODY OPTIONS		
3310-0017	Auxiliary jack pad 24X24 (PR) with side mounted handle. Includes mounting brackets.	1
3310-0033	Pike pole/ladder storage. Available on HP75 SideStacker only. The access door to match the rear body finish.	1
3310-0050	Crosslay triple 5.5" wide single stack to hold up to 200' of 2.0" DJ (each) or 150'-200' 2.5" DJ (each). Includes storage pan to rear of crosslays	1
3310-0090	Hose bed depth 18" HP75 / HP78 SideStacker. Will hold up to 1200' of 5" LDH. Capacity will be reduced with diamond plate covers.	1
DOORS		
3300-0017-004	Door roll up short (up to 45") with satin finish ROM. Location(s): L2.	1
3300-0017-005	Door roll up short (up to 45") with satin finish ROM. Location(s): L3.	1
3300-0019-003	Door roll up tall (greater than 45") with satin finish ROM. Location(s): L1.	1
3300-0019-006	Door roll up tall (greater than 45") with satin finish ROM. Location(s): L4.	1
3300-0164-015	Door double vertically hinged w/rotary latches - painted . Location(s): R1	1
3300-0164-016	Door double vertically hinged w/rotary latches - painted . Location(s): R2	1
COVERS		
3305-0007-000-02	Vinyl Red hose bed cover with attached rear flap(s).	1
3305-0008-000-02	Vinyl Red crosslay cover with attached side flaps.	1
PUMP MODULE		
3130-0076	Pump panel opening is 47" wide.	1
PUMP PANELS		
3134-0012	Officer side upper pump access panel to be horizontally hinged with diamond plate door. Includes (2) push button latches and (2) hold open devices.	1
3134-0016	Stainless steel driver and officer side pump panels.	1
3134-0064	The gauge panel(s) on the driver side of the Side Mount module to be hinged	1

	upward. Panel(s) to include (2) mechanical/pneumatic (as applicable to panel size) hold opens and latches.	
MISC PUMP PANEL OPTIONS		
4460-0003	Pump panel tags color coded per NFPA compliance.	1
WATER TANK		
4010-0198	500 gallon "T" water tank. UPF Poly III blue fill tower.	1
TANK PLUMBING		
4450-0010	2" tank fill Akron manual valve.	1
4450-0022	3" tank to pump Akron manual valve.	1
LADDER STORAGE / RACKS		
3365-0014-610	Dual ladder tunnel for HP75 / HP78 SideStacker. Ladder rack to hold: PEL3-35, PEL-24 and (2) PRL-16. Requires roof ladder option on base section of aerial to meet 115' NFPA requirement..	1
HANDRAILS / STEPS		
3330-0001	Slide-out platform, integral driver side running board (includes hand rail as applicable).	1
3330-0105-060	Dual lighted LED folding step. Location: officer side front compartment face. Each location requires a minimum of (1) handrail per NFPA.	3
3330-0105-062	Dual lighted LED folding step. Location: driver side front compartment face. Each location requires a minimum of (1) handrail per NFPA.	3
MISC BODY OPTIONS		
3090-0001	Hose bed capacity aerial. Provide standard size hose bed.	1
3090-0002	The unit has no overall height restrictions.	1
3090-0004	The unit has no overall length restrictions.	1
3340-0015	Diamond plate single axle wheel well. Includes bolt-on composite wheel well liners and aluminum trim fenderettes.	1
3340-0093	Mud flaps, rear, black with E-ONE logo.	1
3340-0270	The painted aerial body side panels shall be smooth / flush. Applies to SideStacker HB side, panels next to water tank on MM, and upper body sides on RLP.	1
SCBA BOTTLE STORAGE		
3320-0020	SCBA Bottle Storage. (4) Fire Shopp SCBA bottle storage with hinged doors with push button latches. (2) officer side and (2) driver side in wheel well area.	1
PUMPS		
4005-0013	Hale QFLO 750-1250 GPM pump, single stage.	1
4005-0030	Rating 1250 GPM	1
PUMP CERTIFICATION		
4475-0000	Pump certification 750-2250 GPM	1

PUMP OPTIONS		
4015-0007	Pump cooler, 1/4" valve with 3/8" tubing.	1
4015-0053-198	Steamers to be Flush + 1". Location: driver's side.	1
4015-0053-199	Steamers to be Flush + 1". Location: officer's side.	1
4015-0073	Manual operated master pump drain. The master drain shall be clearly marked and placed in accessible location rearward below running board on driver side or L1 compartment.	1
INTAKES		
4440-0005	2.5" Left Intake Akron Manual Valve.	1
INTAKE OPTIONS		
4445-0009	Intake relief valve, Akron.	1
DISCHARGES AND PRECONNECTS		
4415-0012-654	1.5" crosslay with Akron manual valve. Location: crosslay 1 & 2.	2
4415-0051	4" Waterway Discharge with 3" Akron Manual Valve.	1
4415-0058-655	2.5" Crosslay Akron Manual Valve. Location: crosslay 3.	1
4415-0161-581	2.5" Left Panel Discharge Akron Manual Valve w/30 Degree Droop. Location: left side discharge 1.	1
4415-0161-582	2.5" Left Panel Discharge Akron Manual Valve w/30 Degree Droop. Location: left side discharge 2.	1
4415-0164-583	2.5" Right Panel Discharge Akron Manual Valve w/30 Degree Droop. Location: right side discharge 1.	1
DISCHARGE OPTIONS		
4417-0058-359	Bleeder drain valve plumbed to: waterway discharge.	1
4417-0058-573	Bleeder drain valve plumbed to: crosslay preconnect.	3
4417-0058-575	Bleeder drain valve plumbed to: left discharge.	2
4417-0058-576	Bleeder drain valve plumbed to: right discharge.	1
PRESSURE GOVERNORS		
4465-0011	Class 1 TPG pressure governor. Includes, water, oil, volt and tachometer.	1
GAUGES		
4435-0001	Class 1 Intelli-Tank water tank level gauge.	1
4435-0013	4.5" Class 1 compound pressure gauge (30-0-600 PSI).	2
4435-0015-352	2.5" Class 1 compound pressure gauge (30-0-600). Discharge(s): 1.5 in. crosslay preconnect.	2
4435-0015-353	2.5" Class 1 compound pressure gauge (30-0-600). Discharge(s): 2.5 in. crosslay preconnect.	1
4435-0015-359	2.5" Class 1 compound pressure gauge (30-0-600). Discharge(s): waterway discharge.	1

4435-0015-581	2.5" Class 1 compound pressure gauge (30-0-600). Discharge(s): left side discharge 1.	1
4435-0015-582	2.5" Class 1 compound pressure gauge (30-0-600). Discharge(s): left side discharge 2.	1
4435-0015-583	2.5" Class 1 compound pressure gauge (30-0-600). Discharge(s): right side discharge 1.	1
ELECTRICAL SYSTEMS		
5010-0013-E91	Vehicle data recorder - 2009 NFPA compliant. Includes occupant detection with display. Display location: Driver side of center dash electrical cover.	1
5010-0039	V-MUX Electrical system for aerials.	1
5010-0059-339	VFD Text display for V-MUX electrical system. Location: center of dash.	1
LIGHT BARS		
5300-0084-035	Whelen Mini-Freedom LED light bars (PR) model FNMINI 24" with red/clear lenses and MKEZ7 mounts. Location: front cab corners at 20 degree angle.	1
WARNING LIGHT PACKAGES		
5550-0054-537	Whelen 600 series Super LED lower level warning light package. Includes (10) red LED light heads w/chrome flanges. Locate side facing lights: at forward most position, on side of cab down low just ahead of rear door, and on rear fixed outrigger cover.	1
WARNING LIGHTS		
5600-0078-268-06	Whelen Super LED beacon (PR) model L31H with Red domes. Location each side of pump module offset to the rear.	1
5600-0078-479-06	Whelen Super LED beacon (PR) model L31H with Red domes. Location rear upper body on aerial style brackets.	1
5600-0149-170	Hazard (door ajar) light, 2.5" incandescent. Location: center overhead.	1
SIRENS		
5500-0015	Whelen model 295SLSA1 siren with microphone (replaced 295HFSA1).	1
5500-0024-170	The electronic siren control is to be located on the center overhead.	1
SPEAKERS		
5510-0018-209	Whelen SA122FMP electronic siren speaker recessed in front bumper. Location: driver side front bumper.	1
DOT LIGHTING		
5150-0006	Whelen 600 series LED horizontal mount tail lights. Includes LED stop/tail, arrow turn and halogen back-up lights with horizontal Cast 3 housing and weatherproof connectors.	1
5150-0017	License plate light LED with chrome housing located at the rear of the body.	1
5150-0026	Marker light LED body/cab package. E-ONE custom cab with aerial ladder, Mid-Mount platform or Bronto bodies only.	1
LIGHTS - COMPARTMENT, STEP & GROUND		

5380-0009	Compartment light package incandescent for medium bodies.	1
5380-0027	Ground light package for cab and body - small.	1
5380-0033	Step light package body - small.	1
LIGHTS - DECK AND SCENE		
5390-0003	Hose bed light Truck-Lite. Locate at the front area of the hose bed. Switched with work light switch in cab.	1
5390-0007	Deck/scene light circuit wiring through chassis reverse. Requires rear deck or scene light.	1
5390-0022	Crosslay light Truck-Lite. Locate to rear of crosslay (SM) and forward of crosslay (TM as applicable). Switched with work light switch in cab.	1
5390-0048-445	Whelen 600 series gradient Super LED scene lights (PR) with weatherproof connectors. Switch in cab (driver and officer side lights switched separately). Locate up high on rear access door.	1
LIGHTS - NON-WARNING		
5400-0003	Engine compartment light (EA).	1
5400-0010	Incandescent pump compartment light (EA).	1
5400-0039	Spotlight Specialty 2150 hand held located on officer's side of cab dash - hardwired.	1
5400-0047	Pump panel light package with (3) lights per side pump panel. Pump panels over 45" may require additional lights. Side mount only.	1
CONTROLS / SWITCHES		
5100-0000-199	Foot switch to control air horns located officer's side.	1
5100-0007-198	Foot switch to control electronic siren located driver's side.	1
CAMERAS / INTERCOM		
6570-0008	Intercom aerial 2-way. Atkinson Dynamics (Federal). Speaker to be located to rear of platform on Bronto units.	1
MISC ELECTRICAL		
1750-0082-762	12V power distribution module. Includes (6) battery hot and (6) switched hot circuits. 100 amps max (IATS). Location: behind officer's seat.	1
5110-0017	Back-up alarm 97 dB.	1
AERIAL MODEL		
6100-0005	Ladder HP75 with waterway. Includes left side console with cover, split steps at tip and jack leg flood lights.	1
AERIAL HYDRAULIC SYSTEM OPTIONS		
6150-0003-216	Gauge aerial hydraulic oil level. Electronic display to be located on pump operator's panel.	1
MONITORS		
6300-0002	Monitor Akron electric 1000 GPM for ladder. Includes tip and base controls.	1

6300-0017	Monitor painted silver from OEM.	1
AERIAL WARNING LIGHTS		
6550-0011	Outrigger warning lights (PR). Weldon Model 1010.	1
AERIAL LIGHTING		
6560-0002-231	Spot light 12V located left side tip.	1
6560-0003-232	Flood light 12V located right side tip.	1
6560-0005	Flood lights Unity at base (PR).	1
WATERWAY OPTIONS		
6350-0005	Rear 4" NST waterway inlet for rear mounted aerials. Includes chrome cap.	1
6350-0006	2.5" Waterway Class 1 pressure gauge 30-0-600. Locate next to waterway inlet.	1
6350-0010	Flowminder with single readout and totalizer for the aerial waterway to be located at the aerial control station.	1
SIGN PLATES		
6750-0000-000-39	Aerial sign plates 10 x 144 (PR). Available on Booms, HP75 and HP100 only. Does not include lettering. Color: Job Color.	1
AERIAL TESTING		
6900-0000	Aerial flow test - 3rd party.	1
6900-0002	Aerial 2009 NFPA Certification.	1
HAND TOOLS		
7600-0005	Pike Pole Fiberglass 6'.	2
7600-0006	Pike Pole Fiberglass 8'.	2
7600-0008	Pike Pole Fiberglass 12'	2
GROUND LADDERS		
7800-0010	Alco-Lite PRL-16' roof ladder.	2
7800-0016	Alco-Lite PEL-24' 2-section extension ladder.	1
7800-0023	Alco-Lite PEL3-35' 3-section extension ladder.	1
7800-0032	Alco-Lite FL-10, 10' folding ladder w/safety shoes.	1
MISC LOOSE EQUIPMENT		
7600-0016	Wheel chocks 44" NFPA complaint, pair (PR) of Zico SAC-44. Up to 44" diameter tires. Includes mounting brackets.	4
7900-0014	DOT Required Drive Away Kit - Kit includes three (3) triangular warning reflectors with carrying case. This kit is for the end user and is to remain with the truck.	1
EXTERIOR PAINT		
8100-0089	All applicable pump/pre-connect application modules are to have a sanded finish (not painted job color). Includes upper and lower pump modules, crosswalk module and/or speedlay/pre-connect module (as applicable). Rear mounted body/pump	1

	module to be painted job color.		
8100-0116	Rear body surface to have a sanded finish (not painted job color). Includes hinged doors that do not have discrete sales codes and removable panels.	1	
8100-0176-000-17	Paint E-ONE chassis cab - Sikkens paint. Color: FLNA3225E-1 Red.	1	
8100-0183-000-17	Paint Body - Large - For Aerials, T/A Tankers/Wetsides, Rear Mounts and Rescues. Sikkens paint. Color: FLNA3225E-1 Red.	1	
8100-0186-000-39	Paint exterior surface of outer steel wheels. Sikkens paint. Color: Job Color.	1	
8100-0356	Paint lift cylinders, extension cylinders and upper turntable steelwork FLNA4006 white (does not apply to TT deck).	1	
INTERIOR PAINT			
8150-0011	The interior of the cab to be painted Zolatone gray.	1	
STRIPING			
8200-0015	White reflective tape on (2) outriggers.	1	
8300-0002-334-12	NFPA Scotchlite Stripe - 4" wide and straight on front/sides of cab and sides/rear of body. Color: White. Location: bottom of stripe flush with top of bumper and straight back.	1	
8300-0042	White rubrail scotchlite insert.	1	
8300-0084-000-72	Chevron "A" style 6" printed sheet Scotchlite striping on rear of body. Includes rear facing extrusions, panels and doors inboard/outboard of the beavertails (if applicable). Colors to be Yellow/Red.	1	
GRAPHICS			
8400-0022	Logo E-ONE (PR) on aerial lift cylinder. Logo to be black and white reflective material approx 14" long located midway along outward surface of cylinder.	1	
WARRANTY / STANDARD & EXTENDED			
9100-0000	Standard 1 Year Warranty.	1	
9100-0003	Lifetime Frame Warranty.	1	
9100-0004	10 Year/100,000 Mile Structural Warranty - Statement of Warranty.	1	
9100-0005	10 Year Stainless Steel Plumbing Warranty - Statement of Warranty.	1	
9100-0007	20 Year Aerial Device Structural Warranty - Integrity Limited Warranty.	1	
9100-0019	10 Year Limited Paint and Perforation Warranty - For Sikkens Paint.	1	
SUPPORT, DELIVERY, INSPECTIONS AND MANUALS			
9300-0000	Vehicle familiarization aerial (Domestic).	1	
9300-0016	Approval Drawings-Standard.	1	
9300-0038	Manuals, operator, service and exploded view parts CD-ROM.	1	
PRICE	2013 E-ONE TRADITION HP78 AERIAL QUINT - TYPHOON CUSTOM CHASSIS		$550,784.

STATE OF OHIO TERM SCHEDULE

4200 SURFACE RD
COLUMBUS, OH 43228

Quote No: 57490

3/12/2013

Quote Rev:21 Drawing Rev:5

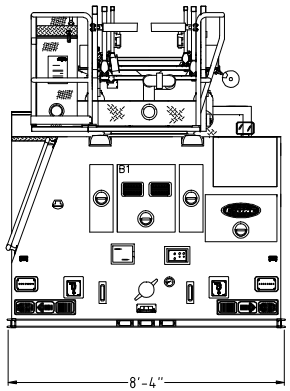

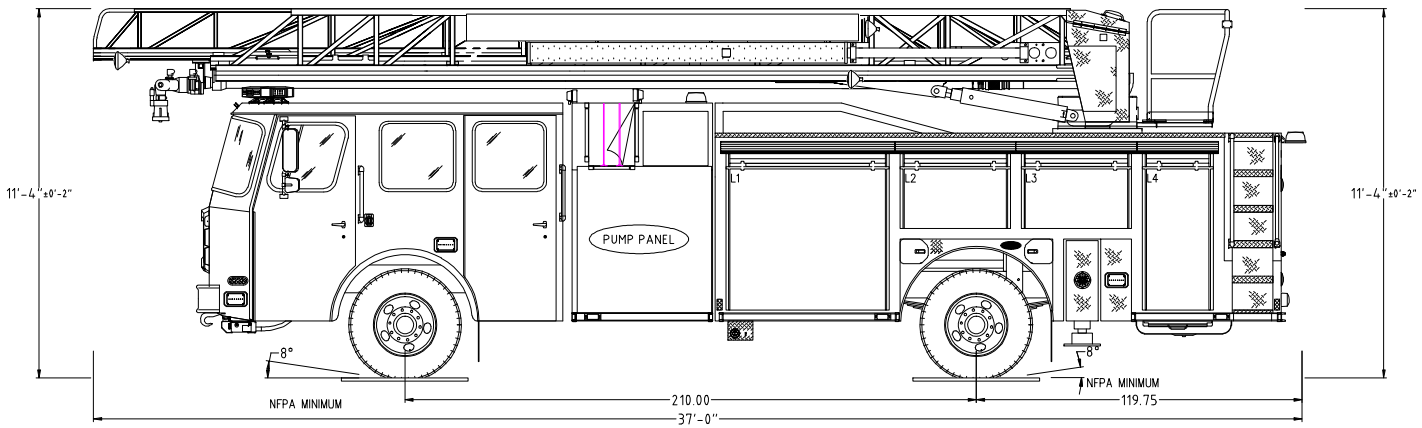

POWERED BY EZDRAW

Notice: This drawing provides a GENERAL REPRESENTATION of the vehicle configuration and should be used for evaluation purposes. The respective dimensions shown,including overall height and length, are estimates and may vary due to manufacturing processes. All other items such as lighting and fixtures, plumbing, compartmentation, and other generally assembled details are shown for REFERENCE ONLY and may not be a direct reflection of the final truck configuration. In ALL situations where this drawing may conflict with the specifications, THE SPECIFICATIONS, AS REFLECTED IN THE APPROVED SHOP ORDER, SHALL PREVAIL. Unless otherwise specified, the proposed apparatus will be manufactured to the latest NFPA recommendations as well as other applicable federally regulated safety regulations. E-One reserves the right to engineer and incorporate design improvements and changes without notice, while adhering to the intent of the specification.

1250 GPM HALE QFLOPUMP 0 TOTAL VOLUME 0 TOTAL FOAM	HOSE LOADS :

	OPENING		INTERIOR DIMENSIONS				
COMPT.	WIDTH	HEIGHT	WIDTH	LOWER HEIGHT	LOWER DEPTH	UPPER HEIGHT	UPPER DEPTH
L1	58	53	60	61	26	53	24
L2	38.5	23	40.5	N/A	N/A	23	24
L3	38.5	23	40.5	N/A	N/A	23	24
L4	24	53	26	61	26	53	24
R1	60	26	60	30	26	N/A	N/A
R2	47	26	47	30	26	N/A	N/A

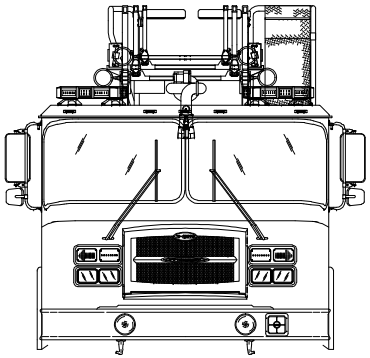

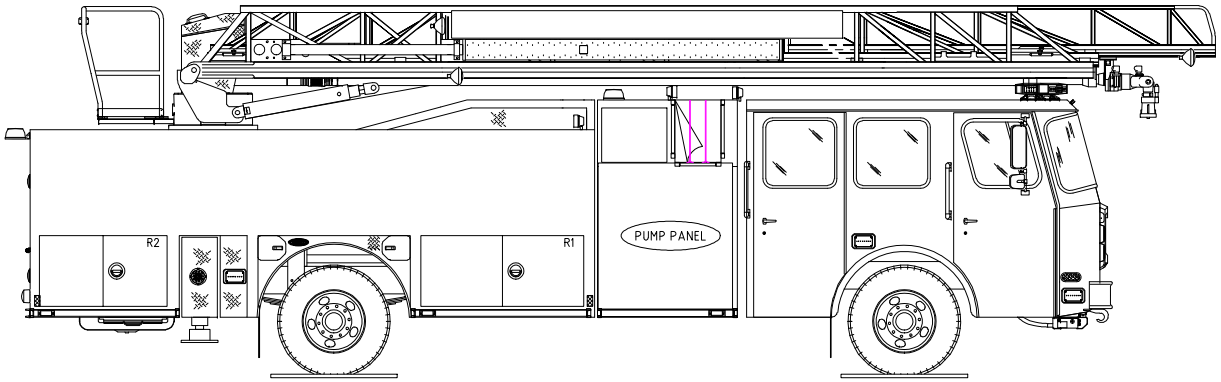

POWERED BY EZDRAW

E-ONE OHIO STATE TERM SCHEDULE 2013 OPTIONS PRICE BOOK

TRADITION AERIAL - CUSTOM CHASSIS

1000	Chassis	
1025-0004	Meritor FL941 front axle 18,000 lb.	$10,303
1025-0005	Meritor FL941 front axle 18,700 lb.	$15,452
1025-0018	Meritor RS-30-185 single rear axle 31,000 lb. capacity.	$12,877
1025-0027	Driver controlled rear differential.	$734
1025-0028	Koni shock absorbers for front axle - adjustable.	$319
1025-0029	Front shock absorbers.	$171
1025-0120	Driver controlled rear differential. Includes guarded toggle switch located on driver side diagnostic panel.	$734
1025-0127	Meritor FL941 front axle 18,000 lb with multi-leaf front springs.	$10,676
1025-0132	Koni shock absorbers for front axle - non-adjustable. For use with IFS front axle only.	$319
1050-0000	Steel wheels for front axle (2).	$301
1050-0002	Steel wheels for rear axle (4).	$598
1050-0007	Front axle wheel trim kit. Includes stainless steel lug nut covers (chrome plated plastic if applicable) and center cap with E-ONE logo. Note: Center cap will have an inspection port IPO a logo if equipped with Stemco oil seals.	$217
1050-0008	Rear axle (single) wheel trim kit. Includes stainless steel lug nut covers (chrome plated plastic if applicable) and center cap with E-ONE logo. E-ONE custom chassis w/steel wheels will have chrome plated plastic lug covers.	$268
1050-0031	Front axle wheel simulator kit. Includes stainless steel wheel simulator and center cap with E-ONE logo. Note: Center cap will have an inspection port IPO a logo if equipped with Stemco oil seals.	$523
1050-0032	Rear axle (single) wheel simulator kit. Includes full stainless steel wheel simulators with integrated lug nut covers and E-ONE logo.	$763
1050-0044	Accuride aluminum wheels for front axle (2).	$1,581
1050-0045	Accuride aluminum wheels for rear axle (4).	$3,156
1060-0001	Two Michelin 315 tires model XZA-1 for front axle.	$1,315
1060-0006	Four Michelin 315 tires model XZA-1 for rear axle	$2,513
1060-0017	Four Michelin 315 rear tires with XDN2 mud and snow tread.	$2,958
1060-0047	Two Michelin 385 tires model XFE for front axle.	$1,359
1060-0050	Tire pressure monitoring valve stem caps.	$150
1070-0012	Reyco rear suspension springs rated equal to the capacity of the axle.	$1,234
1100-0000	16-1/2" x 6" S-cam brakes with ArvinMeritor automatic slack adjusters for front axle.	$282
1100-0001	Meritor EX225H 17" disc brakes for front axle.	$1,101
1100-0002	ArvinMeritor 16-1/2" x 7" S-cam brakes with cast brake drums for a single rear axle.	$282
1100-0005	Brake system air 4X2/4X4.	$7,449
1100-0011	Roll Stability Control, Includes ATC. Not available on commercial chassis, tiller or tandem axle custom chassis.	$1,782
1100-0024	G4 Electronic Stability Control (4x2), Includes RSC and ATC. Not available on 4x4, commercial chassis or tiller.	$3,135
1110-0000	Inlet for air system. Location: [#LOC].	$333
1110-0002	Air dryer Bendix AD-9.	$434
1110-0005	Automatic moisture ejectors, heated.	$378
1110-0011	Air intake restriction gauge.	$232
1110-0026	Air horns recessed in bumper (PR).	$741
1110-0027	Isolated air tank. Includes pressure protection valve.	$503
1110-0041	Air horns Grover recessed in bumper (PR).	$903
1110-0095	Automatic moisture ejector, heated. Wet tank only.	$162
1110-0097	Automatic moisture ejector, non-heated (EA).	$124
1110-0106	Air horns Grover recessed behind bumper (PR). Includes E-ONE grilles on bumper.	$1,095
1125-0002	Jacobs engine compression brake.	$1,570
1125-0018	Compression brake for MAXXFORCE engines.	$1,570
1150-0055	Hinged diamond plate lid for center bumper tray. Includes 1/4 turn latch and gas shock hold open.	$267
1150-0061	Red vinyl lid with velcro fasteners for bumper tray center.	$158
1150-0120	Bumper tray center of bumper with slats 12 inches deep (approx 11 inches to slats).	$400
1150-0139	Nylon black strap with aluminum quick release buckle for front bumper hose tray. Strap to attach to front and rear walls of tray down low as applicable. Location: [#LOC].	$100
1150-0163	Tray officer side bumper next to front intake. Half moon style for 25' of 5" rolled hose.	$579
1150-0178	Hinged diamond plate lid for center bumper tray. Includes push button latch and gas shock hold open.	$267

1150-0180	Yellow vinyl lid with velcro fasteners for bumper tray center.	$158
1150-0185	Hinged diamond plate lid for center bumper tray. Includes push button latch and moon spring hold open.	$267
1150-0196	Tray officer side bumper next to front intake. Half moon style for 20' of 6" rolled hose.	$579
1150-0197	Nylon black strap with aluminium quick release buckle. Location: driver, officer and center top of front bumper gravel shield.	$298
1150-0206	Hinged diamond plate lid for center bumper tray. Includes push button latch chrome grab handle and gas shock hold open.	$310
1150-0207	Hinged diamond plate lid for center bumper tray. Includes 1/4 turn latch and moon spring hold open.	$267
1150-0210	Tray driver side bumper next to frame. Half moon style for 25' of 5" rolled hose.	$579
1150-0214	Traffic cone storage on front bumper extension. Cones to be oriented downard through a 7 3/4" hole in the gravelshield. Includes nylon strap with aluminum buckle. Location: [#LOC].	$332
1150-0215	Hinged diamond plate lid for center bumper tray. Includes 1/4 turn latch and two (2) gas shock hold open.	$291
1150-0218	Bumper tray center of bumper with slats 12 inches deep (approx 11 inches to slats). Mount tray 1" above gravel shield.	$480
1150-0219	Additional gas shock on front bumper tray lid. Location: [#LOC].	$137
1150-0231	Nylon black strap with aluminum quick release buckle for front bumper hose tray. Strap to attach to front and rear walls of tray as high as possible. Location: [#LOC].	$100
1160-0000	Bumper 10" stainless steel.	$1,126
1160-0014	20" Front Bumper Gravel Shield Extension.	$430
1200-0020	TransSynd synthetic transmission fluid for EVS3000.	$168
1200-0234	Eng/Trans Cummins ISL 350HP/EVS3000 2013 EPA compliant engine.	$71,357
1200-0235	Eng/Trans Cummins ISL 400HP/EVS3000 2013 EPA compliant engine.	$83,052
1200-0236	Eng/Trans Cummins ISL 450HP/EVS3000 2013 EPA compliant engine.	$83,770
1225-0033	Exhaust diverter. Diverts exhaust from officer side to driver side. Includes well labeled switch accessible to driver.	$1,157
1250-0003	Frame 10.25 x 3.5 x .375 chassis.	$4,892
1250-0006	Frame liner 9.375 x 3.125 x .375.	$2,694
1250-0061	Frame liner "L" 8.875 x 3.125 x .375.	$2,500
1350-0003	Fuel system 50 gallon.	$1,338
1350-0011	Fuel pump electric w/re-prime.	$370
1350-0012	Fuel shut-off valve. Location: [#LOC].	$94
1350-0013	Racor fuel/water separator to be a bottom drop out style. Shall include indicator light and audible alarm.	$645
1350-0014	Thermal control in-line fuel heater.	$429
1350-0043	Fuel system w/50 gallon stainless steel tank.	$2,281
1400-0002	Battery four group 31 1000 CCA.	$886
1400-0032	Battery five group 31 1000 CCA (two left / three right). For use with below cab DEF tank only.	$1,107
1500	**Cab**	
1510-0000	Seat cavity covers.	$154
1510-0035	Universal air pack bottle bracket (EA). Location: [#LOC].	$134
1510-0038	Driver seat 911 air ride.	$826
1510-0040	Officer seat to be 911 air ride	$826
1510-0041	Officer seat 911 air ride SCBA.	$983
1510-0042	Officer seat to be 911 fixed SCBA.	$803
1510-0043	Driver seat to be Bostrom air ride.	$915
1510-0046	Officer seat to be Bostrom air ride SCBA.	$1,062
1510-0047	Officer seat to be Bostrom fixed SCBA.	$888
1510-0050	Rear facing 911 seat with SCBA driver's side.	$690
1510-0053	Rear facing 911 seat with SCBA officer's side.	$690
1510-0054	Rear facing Bostrom seat with SCBA driver's side.	$665
1510-0057	Rear facing Bostrom seat with SCBA officer's side.	$665
1510-0062	Two man bench centered on rear wall with 911 SCBA backs.	$1,177
1510-0063	Two man bench centered on rear wall with Bostrom SCBA.	$1,451
1510-0082	Zico Quic-Hold mechanical air pack bottle bracket for 5" bottle (ea). Model MWAB with adjustable footplate and pull release strap. Location: [#LOC].	$487
1510-0091	Zico Quic-Hold mechanical air pack bottle bracket (EA). Model QLM-U-OPR with adjustable footplate and pull release. Location: [#LOC].	$589
1510-0116	Fold-down seat located [#LOC].	$369
1510-0117	Bostrom SecureAll mechanical air pack bottle bracket (EA). Location: [#LOC].	$468
1510-0118	Flip-up 911 SCBA seat located [#LOC].	$843
1510-0119	Flip up Bostrom SCBA seat located [#LOC].	$869
1510-0122	Fold down seat with 911 SCBA back located [#LOC].	$821

1510-0123	Fold down seat with Bostrom SCBA back located [#LOC].	$834
1510-0126	CrewGuard occupant seating detection system. Display location: [#LOC].	$3,040
1510-0127	Additional CrewGuard display. Location: [#LOC].	$242
1510-0131	Bostrom SecureAll mechanical air pack bottle bracket (EA) for bench / fold-down seat. Location: [#LOC].	$574
1510-0203	Bracket SCBA Lifeguard SmartDock Gen2 restraint system. Location: [#LOC].	$435
1510-0253	Bostrom SecureAll mechanical air pack bottle bracket (EA). SecureAll factory adjusted to accommodate carbon fiber bottle(s) in mounted location(s) as specified. Location: [#LOC].	$468
1510-0254	Bostrom SecureAll mechanical air pack bottle bracket (EA) for bench / fold-down seat. SecureAll factory adjusted to accommodate carbon fiber bottle(s) in mounted location(s) as specified. Location: [#LOC].	$574
1515-0017	Air conditioning for the Typhoon X, CII X and Quest with Cummins ISC/ISL engine, radiator mounted condenser.	$5,847
1520-0012	Typhoon X long cab with 67.5" CA	$31,263
1520-0013	Typhoon X medium cab with 58" CA	$29,026
1535-0002	Driver side cab wheel well medical cabinet approximately 42 x 22 (25 Quest) x 28. Includes external locking roll-up door and interior hinged door with locking push-button latch. Cabinet includes (2) adjustable shelves.	$1,804
1535-0003	Officer side cab wheel well medical cabinet approximately 42 x 22 (25 Quest) x 28. Includes external locking roll-up door and interior hinged door with locking push-button latch. Cabinet includes (2) adjustable shelves.	$1,804
1535-0005	Medical cabinet mounted on rear wall of cab 48 x 40 x 20 with locking roll up door. Lower door opening raised to provide hand clearance.	$3,515
1535-0032	All medical cabinet RUD in the cab to be locking with 1250 key	$121
1535-0057	Driver side cab wheel well medical cabinet approximately 42 x 22 (25 Quest) x 28. Includes external locking pan door painted job color and interior hinged full height door with locking push-button latch. Cabinet includes (2) adjustable shelves.	$2,164
1535-0130	Driver side cab wheel well medical cabinet approximately 42 x 22 (25 Quest) x 28. Includes external locking roll-up door and interior hinged door with locking push-button latch; hinged outboard. Cabinet includes (2) adjustable shelves.	$1,804
1535-0131	Driver side cab wheel well medical cabinet approximately 42 x 24 (27 Quest) x 28. Includes external locking roll-up door and interior hinged door with locking push-button latch. Cabinet includes (2) adjustable shelves.	$1,804
1535-0132	Officer side cab wheel well medical cabinet approximately 42 x 24 (27 Quest) x 28. Includes external locking roll-up door and interior hinged door with locking push-button latch. Cabinet includes (2) adjustable shelves.	$1,804
1535-0133	Cab medical/storage cabinet(s) interior finish to be Zolatone gray.	$321
1535-0148	All medical cabinet RUD in the cab to be locking with GEM key lock	$121
1535-0156	Medical cabinet rear engine cover, bolted to forward facing map box approximately 34Wx25Hx18D. To include one (1) adjustable shelf. Two (2) vertically hinged swing out doors shall allow access (to the rear), the doors shall be raised 6" up from the cabinet's base. The cabinet shall include push-button latching, (2) each door (1) top and (1) bottom.	$1,254
1535-0176	Medical cabinet mounted on rear wall of cab approximately 48 x 38 x 20 with locking roll up door. Lower door opening raised to provide hand clearance. Required with rear outboard fold down seat(s).	$3,515
1535-0186	Medical cabinet mounted on rear wall of cab 48 x 40 x 17 with locking roll up door. Lower door opening raised to provide hand clearance.	$3,515
1535-0187	Driver side cab wheel well medical cabinet approximately 42 x 24 (25 Quest) x 28. Includes external locking roll-up door and interior hinged door with locking push-button latch. Cabinet includes (2) adjustable shelves.	$1,804
1535-0188	Officer side cab wheel well medical cabinet approximately 42 x 24 (25 Quest) x 28. Includes external locking roll-up door and interior hinged door with locking push-button latch. Cabinet includes (2) adjustable shelves.	$1,804
1535-0190	All shelves within the medical cabinet(s) shall have the a full perimeter lip IPOS.	$55
1540-0006	Map box suspended with drop-down doors.	$506
1550-0009	Fixed rear cab wall narrow windows (pr).	$104
1550-0011	Rear crew cab door windows. Includes manual roll-down actuation. Not available with paddle style door latching.	$972
1550-0017	Cab door panels stainless steel.	$1,201
1550-0018	Scuff plates stainless steel (Set). Not available with paddle latches.	$95
1550-0024	All cab doors shall have exterior paddle latches.	$561
1550-0037	(4) Incandescent cab step area lighting. Locate each light in [#LOC]. Lights to be switched with door ajar.	$141
1550-0038	(4) LED cab step area lighting. Locate each light [#LOC]. Lights to be switched with door ajar.	$557
1550-0054	All cab exterior access doors to have 1250 keyed locks.	$520

1550-0099	Scuff plates stainless steel (Set). Approx. 7"x7" to encompass door handle and lock. Not available with paddle latches.	$206
1550-0103	Rear crew cab door windows with rear fixed panel. Includes manual roll-down actuation. For use with paddle style door latching.	$1,135
1550-0117	Scuff plates stainless steel (PR) door lock. For use with paddle latches.	$48
1550-0128	(4) Whelen LED cab step area lighting. Locate each light [#LOC]. Lights to be switched with door ajar.	$723
1550-0134	Polished stainless steel trim on bottom edge of the over wheel cab compartment opening (ea).	$31
1550-0135	Stainless steel trim on the vertical edge of the over wheel cab compartment opening (ea).	$43
1550-0136	Polished stainless steel trim on the vertical edge of the over wheel cab compartment opening (ea).	$56
1620-0002	Stainless steel grille for Typhoon X.	$795
1670-0001	Ramco 6001FFR mirrors. Remote controlled with top CAS750 convex. Location: [#LOC].	$1,365
1670-0002	Ramco 6001MCR mirrors. Remote controlled with bottom convex. Location: [#LOC].	$1,084
1670-0003	Velvac 2010 mirrors. Door mounted west coast style with remote control and heat.	$581
1670-0013	Both cab mirrors to be heated.	$265
1670-0038	Lang Mekra mirrors w/LED marker lights and turn signals. Door mounted west coast style with convex, remote control and heat.	$1,178
1670-0052	Ramco 6000-PCHR mirrors. The mirrors shall incorporate heated and remote for both flat and convex using (2) Ramco model ELE-310 switches. Location: [#LOC].	$1,580
1675-0022	Pair of 18" handrails located just behind driver and officer front door one each side.	$326
1675-0023	Pair of 18" handrails located just behind driver and officer rear door (ALS doors if equipped) one each side.	$326
1675-0030	Mud flaps, front, black with E-ONE logo.	$137
1675-0113	Pair of handrails (36" driver exterior and 18" officer interior) located just behind driver and indside officer rear door. ALS cab with multiple height exterior access only.	$355
1675-0116	Brushed stainless steel scuff plates for cab handrails (PR).	$178
1675-0144	Pair of 24" handrails located just behind driver and officer front door one each side.	$341
1675-0149	The battery charger receptacle mounting plate shall be fabricated using 3/16" aluminum smooth plate. It shall be painted to match cab two tone job colors and align with the paint break as mounted.	$122
1680-0001	Block heater 1000 watt.	$449
1680-0005	Thermatic fan clutch.	$1,246
1680-0006	Drivelines 1710.	$927
1680-0008	Tow eyes front painted below bumper/cab (PR).	$233
1680-0012	Tow eyes rear frame painted.	$479
1680-0021	Exhaust end for Plymovent. For exhaust extraction system.	$238
1680-0042	Tow hooks front painted in the down position.	$242
1680-0051	Aerial hydraulic activation system.	$1,117
1680-0116	Oil pan heater. Fleetguard 22MM 150W/120V wired to shoreline.	$426
1680-0187	On-Spot tire chain installation. Requires pre-wire option located in Cab Electrical.	$2,462
1680-0217	Driveline guard (EA).	$267
1680-0227	Tow eyes front painted with 3" holes below bumper/cab (PR).	$587
1680-0231	Insta-chain tire chain installation. Requires pre-wire option located in Cab Electrical.	$2,462
1680-0239	Tow eyes rear frame painted mounted low just above tailboard.	$479
1680-0242	Cold weather pkg for cab. Includes additional insulation on the front wall and insulation on rear cab heater hose lines (if equipped).	$2,931
1680-0249	Driveline guards (as applicable).	$798
1680-0250	Diesel Exhaust Fluid (DEF) 5 gallon tank for 2013 EPA engines. Location: [#LOC].	$1,518
1680-0251	Diesel Exhaust Fluid (DEF) 10 gallon tank for 2013 EPA engines. Location: [#LOC].	$1,587
1685-0057	Heaters rear with covers (PR), and front heater with heat to the feet for the driver and officer.	$1,432
1685-0094	Storage below rear bench seat. (1) horizontally hinged door on the front of the rear bench seat.	$387
1685-0161	Severe duty dash package. Includes smooth plate alum center and officer side dash painted to match cab interior and lower dia plt kick panels.	$829
1685-0164	Severe duty engine cover. Includes floor type matting on sides, top forward and top rearward engine covers with smooth aluminum trim painted to match cab interior.	$1,056
1685-0180	On Scene Solutions Talon helmet holder (EA). Location: [#LOC].	$352
1685-0272	Cup holder (PR) with shallow tray located at front center of engine cover. Polyurethane construction for use with severe duty engine cover only.	$105
1685-0275	Cup holder (PR). Polyurethane construction for use in Typhoon and CII with severe duty engine cover only. Location: [#LOC].	$127
1685-0279	Chrome grab handle. Locate (1) on the engine cover centered between latches.	$99
1700-0005	Alternator Leece Neville 320 amp. 320 amp SAE/275 amp NFPA.	$2,853
1750-0009	Radio AM/FM CD with weather band located [#LOC].	$703
1750-0010	Radio speakers additional pair. Locate each side rear cab ceiling.	$237

1750-0013	Turn signal Whelen 600 LED amber arrow pair located [#LOC].	$558
1750-0024	Auto-Eject receptacle inlet 20 amp located [#LOC] with a [#COL] cover.	$497
1750-0029	Switch horn button two position DOT/air horn.	$86
1750-0030	Switch horn button two position DOT/electronic siren.	$86
1750-0031	Switch horn button two position DOT/Q2B.	$86
1750-0034	Switch, additional 12 volt/15 amp. Location and function: [#LOC].	$175
1750-0047	The chassis shall be pre-wired for installation of tire chains.	$369
1750-0059	Receptacle inlet 20 amp with a [#COL] cover. Location: [#LOC].	$250
1750-0066	Halogen front turn signal amber (PR). Locate: [#LOC].	$238
1750-0071	Mount customer supplied antenna on cab roof. Location: [#LOC].	$151
1750-0072	12 VDC (or 24VDC) electrical outlet in the cab wired battery hot. Location: [#LOC].	$52
1750-0075	English dominant main cab gauge cluster.	$1,765
1750-0076	Metric dominant main cab gauge cluster.	$1,869
1750-0082	12V power distribution module. Includes (6) battery hot and (6) switched hot circuits. 100 amps max (IATS). Location: [#LOC].	$269
1750-0083	Turn signal Federal Signal QuadraFlare QL64Z-ARROW LED amber pair located [#LOC].	$238
1750-0125	Block heater receptacle 15 amp with a [#COL] cover. Location [#LOC].	$250
1750-0166	ATC override switch.	$175
1750-0188	DPF regeneration override switch.	$175
1750-0260	Battery charger, Super Smart, 20 amp with 120V Kussmaul HP air compressor.	$1,445
1750-0343	Battery charger E-ONE LPC 20. 120 volt inlet, 20 amp output.	$523
1750-0344	Battery charger E-ONE LPC 40. 120 volt inlet, 40 amp output.	$796
1750-0355	Each 110 volt cab receptacle shall have a dedicated breaker within the breaker box. This is to provide each cab mounted receptacle (single outlet, duplex, etc. as applicable) with its own isolated circuit.	$230
1750-0356	Radio speaker (1). Locate center rear ceiling. Wiring to terminate in center overhead console for customer supplied radio.	$119
1750-0369	On-Spot activation switch shall have a red flip up safety guard. The switch shall de located on the driver side overhead panel offset to the officer side as far as possible.	$44
1800-0013	Cooling system for use with Cyclone II X, Typhoon X, and Quest chassis. For use with 2010/2013 EPA engines. Includes coolant recovery system.	$6,238
3000	**Body**	
3080-0010	Body aerial HP75 / HP78 SideStacker Quest / CII / Typhoon with pump. Single axle. Includes pocket style drop down step at left rear staircase. The rear access doors to match the rear body finish.	$42,219
3080-0198	Body aerial HP75 / HP78 SideStacker Quest / CII / Typhoon with pump. Single axle. Includes 3/16" diamond plate floors for all compartments, pocket style drop down step at left rear staircase. The rear access doors to match the rear body finish.	$42,405
3110-0072	Rear of body to have flush painted smooth plate body panels.	$1,395
3134-0006	The single gauge panel on the driver's side of the side mount module is to be hinged downward. Includes two (2) cable hold opens, and latches.	$117
3134-0064	The gauge panel(s) on the driver side of the Side Mount module to be hinged upward. Panel(s) to include (2) mechanical/pneumatic (as applicable to panel size) hold opens and latches.	$117
3134-0113	Officer side upper pump access panel to be horizontally hinged with aluminum smooth plate door painted Zolatone black both sides. Includes (2) push button latches and (2) hold open devices.	$220
3136-0004	The lower area of the pump compartment to have a four (4) sided heat pan with two (2) removable (side to side) bottoms. Bottoms to be secured in the closed position with mechanical fasteners.	$879
3136-0006	Two (2) pump compartment heaters are to be mounted in the pump area. Locate as low as possible.	$1,429
3136-0011	P-Rubber in flex joint(s) between pump module and/or body modules.	$523
3136-0081	A pump compartment heater with 110V blower to be mounted in the pump area.	$1,113
3136-0114	The running board(s) to be notched for Pistion Intake Valve. Location(s): [#LOC].	$407
3136-0117	P-Rubber in flex joint(s) between pump module and/or body modules. Horizontal across tops and along sides at flex joint(s).	$523
3200-0054	Heater rear walk-in area. Locate under bench seat in the body interior.	$1,432
3300-0007	Door single vertically hinged painted. Location(s): [#LOC]	$649
3300-0008	Door double vertically hinged painted. Location(s): [#LOC].	$722
3300-0011	Door single horizontally hinged lift-up painted. Location(s): [#LOC]	$631
3300-0017	Door roll up short (up to 45") with satin finish ROM. Location(s): [#LOC].	$728
3300-0019	Door roll up tall (greater than 45") with satin finish ROM. Location(s): [#LOC].	$1,038
3300-0021	Door roll up short (up to 45") with painted finish ROM. Location(s): [#LOC].	$1,234
3300-0022	Door roll up tall (greater than 45") with painted finish ROM. Location(s): [#LOC].	$1,544
3300-0030	Door double 3-point vertically hinged painted. Location(s): [#LOC]	$1,441

3300-0066	Drip pan for a ROM roll-up door (EA). Location(s): [#LOC].	$146
3300-0164	Door double vertically hinged w/rotary latches - painted . Location(s): [#LOC]	$722
3300-0167	Door double 3-point vertically hinged w/rotary latches - painted. Location(s): [#LOC]	$1,441
3300-0196	Door double vertically hinged painted, includes (2) gas shock-style hold-open device IPOS. Location(s): [#LOC].	$778
3300-0206	Additional roll up door stop latches shall be mounted for B1 at a raised location aligned with the bottom of the ladder tunnel. The raised latches/hooks shall not be included as part the door ajar circuit.	$63
3305-0001	Cover aluminum (2) piece with recessed handles, SideStacker. Note: This option effects hose bed capacity.	$1,647
3305-0003	Single diamond plate cover for the crosslay area. Includes applicable grab handle(s) and (2) hold downs. Non-aerial applications to be tagged as a non-stepping surface.	$519
3305-0007	Vinyl [#COL] hose bed cover with attached rear flap(s).	$747
3305-0008	Vinyl [#COL] crosslay cover with attached side flaps.	$262
3305-0022	Vinyl rear cover for diamond plate hose bed cover. Color: [#COL].	$231
3305-0024	Vinyl [#COL] side covers for diamond plate crosslay cover.	$164
3305-0064	Nylon black strap with aluminum quick-release buckle for hose tray. Strap to attach to side walls of tray down low as applicable. Location: [#LOC].	$100
3305-0066	Vinyl cover for front headboard opening. Cover to be black with twist locks in the corners and snaps on the sides.	$222
3305-0166	Nylon black strap with aluminum quick-release buckle for hose tray. Strap to attach to side walls of tray down low as applicable. For use with rolled hose. Location: [#LOC].	$109
3305-0174	Single diamond plate cover for the crosslay area. Includes applicable grab handle(s) and (2) hold downs. Cover to be embossed diamond plate.	$571
3305-0175	Vinyl fire retardent [#COL] hose bed cover with attached rear flap(s).	$934
3305-0176	Vinyl fire retardent [#COL] side covers for diamond plate crosslay cover.	$205
3305-0183	Vinyl [#COL] crosslay cover with attached side flaps with bungee cord.	$327
3305-0184	Vinyl [#COL] side covers for diamond plate crosslay cover. Includes large pull tabs to ease securing end flaps while wearing gloves.	$164
3305-0189	The rear flap(s) of the hosebed cover shall be upgraded to add weight to the bottom of the rear vertical flap(s).	$464
3305-0191	Vinyl rear cover for diamond plate hose bed cover using California Type 3 straps IPOS. Color: [#COL].	$354
3305-0200	Vinyl [#COL] end covers for upper outboard hose storage of the hosebed.	$164
3305-0203	Nylon black strap with aluminum quick-release buckle for tailboard hose tray(s). Strap to attach to side walls of tray down low as applicable.	$100
3305-0207	Vinyl [#COL] hose bed cover with side bungee cords for main hose bed storage area. Seperate cover w/snaps and attached rear flap for hose chute(s). Aerial application only.	$1,040
3305-0212	Vinyl fire retardent [#COL] hosebed cover with twist locks fasteners and bungee cord attached rear flap(s). Cover to be partial hosebed cover leaving hosebed walkway area uncovered. To extend full length of the hosebed from roof top compartment on the side to divider against walkway in the middle and to hosebed storage pan rearward mounting flange at the front.	$1,207
3310-0017	Auxiliary jack pad 24X24 (PR) with side mounted handle. Includes mounting brackets.	$1,014
3310-0024	Tailboard 12" bolt on-G067. Includes handrail below hosebed and (1) underbody ground light on the officer's side.	$625
3310-0033	Pike pole/ladder storage. Available on HP75 SideStacker only. The access door to match the rear body finish.	$558
3310-0050	Crosslay triple 5.5" wide single stack to hold up to 200' of 2.0" DJ (each) or 150'-200' 2.5" DJ (each). Includes storage pan to rear of crosslays	$3,165
3310-0053	Crosslay double to hold up to 400' of 2.0" DJ (each). Includes storage pan to rear of crosslays.	$2,734
3310-0169	Pikepole/Ladder storage. Holds (2)6' APH6, (2)8' APH8, (2)12' APH12 Fire Hooks Unlimited Inc. pike poles and (1) FL-10 attic ladder. Available on HP75 SideStacker only. The access door to match the rear body finish.	$558
3310-0190	Auxiliary jack pad 24X24 (PR) with side mounted handle and 2x2 aluminum angles welded to form u-shaped channel for jack foot. Includes mounting brackets. Note: Truck is not to be driven with pads on jack feet.	$1,109
3310-0220	Crosslay single (1) 10.5" wide double stack to hold up to 300-400' of 2.5" DJ. Includes storage pan to rear of crosslays.	$1,278
3320-0010	SCBA Bottle Storage. (4) Cast Product SCBA bottle storage doors. (2) each side in rear wheel well area. Each tube to include a ribbed rubber insert mounted to rear of tube.	$581
3320-0020	SCBA Bottle Storage. (4) Fire Shopp SCBA bottle storage with hinged doors with push button latches. (2) officer side and (2) driver side in wheel well area.	$1,098
3320-0053	SCBA Bottle Storage. (4) E-ONE SCBA bottle storage with hinged doors (doors to match wheel well material) with push button latches. (2) officer side and (2) driver side in wheel well area.	$619

3320-0061	SCBA Bottle Storage. (4) Cast Product SCBA bottle storage doors. (2) each side in rear wheel well area.	$581
3330-0001	Slide-out platform, integral driver side running board (includes hand rail as applicable).	$1,220
3330-0004	Slideout platform-recessed rear. Located below hosebed. Includes a handrail below hosebed. Requires extended hosebed on HP100, CR100, and 92 Pltfrm SideStacker bodies.	$798
3330-0007	Folding Step. Location [#LOC]. Each location requires a minimum of (1) handrail per NFPA.	$113
3330-0029	Intermediate pump panel step officer side with forward tapered corner. Includes (1) lower and (1) upper folding step with (1) handrail and (1) recessed step light located above the intermediate step. Step light to be switched thru work light in cab.	$825
3330-0105	Dual lighted LED folding step. Location: [#LOC]. Each location requires a minimum of (1) handrail per NFPA.	$107
3330-0114	Intermediate pump panel step officer side with forward tapered corner. Includes (1) lower and (1) upper dual LED lighted CPI folding step and a minimum of (1) handrail as req to meet NFPA. Step lights to be switched thru work light in cab.	$821
3330-0150	Intermediate pump panel step officer side without taper. Includes (1) lower and (1) upper dual LED lighted CPI folding step and a minimum of (1) handrail as req to meet NFPA. Step lights to be switched thru work light in cab.	$821
3340-0015	Diamond plate single axle wheel well. Includes bolt-on composite wheel well liners and aluminum trim fenderettes.	$1,000
3340-0035	Divider Long. To run full length of hose bed (front to rear).	$441
3340-0077	Body compartment Interiors to have Zolatone gray finish. To include pan of hinged doors (as applicable). Does not include floors if they are dia plt.	$4,713
3340-0093	Mud flaps, rear, black with E-ONE logo.	$145
3340-0111	Horizontal ladder bracket. Location and type of ladder: [#LOC].	$230
3340-0152	Dri-Dek brand [#COL] floor matting covering all applicable compartment floors, shelves, and rollout trays.	$2,037
3340-0405	Sign, "STAY BACK 500 FEET" with black reflective lettering. Locate below rear of body.	$118
3340-0488	Divider long for use with hosebed preconnect. Divider to be set back and/or notched at forward area of hosebed for access to preconnect line connection.	$441
3340-0636	Fill Tower support bracket to be held 1/4" back from fill tower and attached to front hosebed wall.	$105
3365-0014	Dual ladder tunnel for HP75 / HP78 SideStacker. Ladder rack to hold: [#LOC].	$4,616
3365-0321	Horizontal ladder bracket, Includes .187" smooth aluminum boot painted black durabak with ladder hold down. Location and type of ladder: [#LOC].	$276
3365-0334	Ladder Storage Box. Located in the officer side hosebed. The top shall be enclosed using the hosebed cover, the rear access shall be included in the vinyl rear flap as part of the hose bed cover (hinged door not included), The hosebed cover and rear flap shall be sold separately. Box to hold (1) Alcolite PEL 24' 3-section, (1) Alcolite PRL 12' roof, (1) Alcolite FL 10' attic ladder, (2) backboards and (2) pike poles.	$2,444
3370-0025	Permanent shelf. Locate in [#LOC].	$86
3370-0031	Storage system for compartment L1. Includes vertical partition 24" from right side wall, (2) adj. HD tool boards to rear of partition, roll-out tray w/24" 500 lb. slides on floor ahead of partition & fixed shelf at the top of the rear wall offset ahead of partition. HP75 / HP78 SideStacker.	$2,411
3370-0052	Adjustable shelf. For non-transverse compartments that are 16" or greater in depth. Location: [#LOC].	$215
3370-0054	Tracks for adjustable shelf and/or adjustable tray in compartments 16" or greater in depth. Location: [#LOC].	$167
3370-0144	Permanent shelf, bolt in, suspended from ceiling and forward in compartment. Locate in [#LOC].	$263
3380-0019	Running board suction tray. Includes removable slats in bottom of tray. Location(s): [#LOC]	$460
3380-0055	Floor mounted roll-out/tilt down tray with aluminum frame. Mount on [#LOC] floor.	$959
3380-0056	Adjustable mounted roll-out/tilt down tray with aluminum frame. Location(s): [#LOC]. For use in single depth or rescue style compartments.	$1,216
3380-0076	Floor mounted roll-out tray, with gas spring. 500 lbs. capacity. Location: [#LOC].	$588
3380-0077	Adjustable roll-out tray with 500 lbs. capacity. Location(s): [#LOC].	$844
3380-0079	Adjustable heavy duty tool board. Includes return style reinforcing bends on vertical front and rear edges of tool board, upper and lower adjustable track and gas shock actuated. Tool board sized to compartment height and depth as applicable. Location(s): [#LOC].	$774
3380-0081	Roll-out generator tray. Includes tray interlock. Locate [#LOC].	$700
3380-0197	Floor mounted roll-out/tilt down tray with aluminum frame. Mount on [#LOC] floor. Tray(s) to have 2" high sides all around IPO standard.	$959
3380-0198	Adjustable mounted roll-out/tilt down tray with aluminum frame. Location(s): [#LOC]. For use in single depth or rescue style compartments.	$1,216
3390-0150	Storage system for compartment L1. Includes vertical partition 24" from right side wall, (2) adj. HD tool boards to rear of partition and a roll-out tray w/24" 500# slides on floor ahead of partition. HP75 / HP78 SideStacker.	$2,324

3390-0223	Storage system for compartment L1. Includes vertical partition 24" from right side wall, (2) adj. HD tool boards to rear of partition, roll-out tray w/24" 500# slides on floor ahead of partition & adj. shelf ahead of partition (upper). HP75 / HP78 SideStacker	$2,705
3390-0263	Storage system for compartment L1. Includes vertical partition 24" from right side wall, (2) adj. HD tool boards to rear of partition & fixed shelf at the top of the rear wall offset ahead of partition. HP75 / HP78 SideStacker.	$1,824
3390-0269	Storage system for compartment L1. Includes vertical partition centered from side to side, (1) adj. HD tool board to rear of partition, adj. shelf ahead of partition in lower with fixed shelf above at offset. HP75 / HP78 SideStacker.	$1,562
4000	**Pumps/Tanks**	
4005-0013	Hale QFLO 750-1250 GPM pump, single stage.	$20,480
4005-0016	Hale QMAX 1000-2250 GPM single stage pump.	$24,632
4005-0019	Waterous CS 750-1250 single stage pump.	$21,502
4005-0021	Waterous CSU 1500-2250 GPM single stage pump.	$24,391
4005-0054	Hale Qflo-23L 1250 pump. Tradition.	$17,122
4005-0122	Waterous CSU 1500-2250 GPM single stage Pump. Shall include the Endurance CSC20 Waterous, C20 transmission.	$34,138
4005-0130	Hale QFLO-PLUS 750-1250 GPM Pump single stage	$20,268
4005-0135	Hale Qflo-23X 1250 pump. Tradition.	$17,122
4005-0154	Hale QMAX-XS 1250-2250 GPM single stage pump.	$25,485
4010-0198	500 gallon "T" water tank. UPF Poly III blue fill tower.	$6,276
4015-0002	Mechanical speed counter for Hale pumps.	$279
4015-0007	Pump cooler, 1/4" valve with 3/8" tubing.	$146
4015-0008	Zinc anodes for Hale pump (PR), (1) discharge side and (1) intake side.	$282
4015-0018	Valve Inlet MIV-E - Hale. Location: [#LOC].	$3,006
4015-0026	Electronic speed counter for Waterous pumps.	$276
4015-0039	Pump seal mechanical for Waterous pump.	$624
4015-0041	Valve Monarch Electric - Waterous. Location: [#LOC].	$4,899
4015-0044	Anodes for Waterous pump - (Pair) (1) discharge side and (1) intake side.	$341
4015-0066	Trident Pump Primer W/3 Barrel Push Button Control.	$945
4015-0075	Pump Seal Mechanical - Hale. For use with Tradition Hale pumps.	$2,059
4015-0131	Hale AnodePro Kit (3) Anodes with Flange. One on each suction tube and one anode on the discharge located as close to the center of the pump as possible.	$993
4015-0159	Valve Inlet MIV-E - Hale. Location: [#LOC].	$3,006
4015-0166	Pump cooler, automatic with 3/8" tubing. Include a check valve that is install between the pump discharge and tank that will automatically close when drafting.	$126
4015-0175	Additional control and air bleeder for the MIV-E to provide controls at: [#LOC].	$483
4100-0033	30 gallon integral foam tank for [#LOC]. UPF Poly III [#COL] fill tower. Foam tank capacity will reduce the water tank capacity.	$986
4100-0035	20 gallon integral foam tank for [#LOC]. UPF Poly III [#COL] fill tower. Foam tank capacity will reduce the water tank capacity.	$910
4100-0036	40 gallon integral foam tank for [#LOC]. UPF Poly III [#COL] fill tower. Foam tank capacity will reduce the water tank capacity.	$1,075
4405-0100	Booster cord reel rewind switch. Switch located [#LOC].	$103
4415-0008	1.5" front bumper discharge Akron manual valve.	$1,378
4415-0012	1.5" crosslay with Akron manual valve. Location: [#LOC].	$857
4415-0041	3" Deck Gun Discharge, Akron manual valve.	$1,464
4415-0051	4" Waterway Discharge with 3" Akron Manual Valve.	$1,989
4415-0058	2.5" Crosslay Akron Manual Valve. Location: [#LOC].	$1,034
4415-0161	2.5" Left Panel Discharge Akron Manual Valve w/30 Degree Droop. Location: [#LOC].	$1,122
4415-0164	2.5" Right Panel Discharge Akron Manual Valve w/30 Degree Droop. Location: [#LOC].	$1,122
4415-0165	3" Right Panel Discharge Akron Manual Valve w/30 Degree Droop. (Waterous pumps noted if location is forward of steamer use lower discharge port.) Location: [#LOC].	$1,714
4415-0613	4" waterway discharge with 4" Akron electric valve.	$4,102
4415-0619	4" Right Pump Panel Discharge with 3" Akron Manual Valve. The 4" NST threads shall be a integral part of the valve. (Waterous pumps noted location to be forward lower port.) Location: [#LOC].	$1,688
4415-0762	4" Pump Panel Discharge Akron Electric Valve with 30 Degree Droop. Location: [#LOC].	$4,367
4415-0858	Triple speedlay (1) 1.5" and (1) 2.5" at bottom and located side by side (1) 1.5" above the bottom 2.5". All with Akron manual valves.	$3,051
4415-0887	Triple speedlay (1) 1.5" and (1) 2.5" at bottom and located side by side (1) 1.5" above the bottom 1.5". All with Akron electric valves.	$7,771

4415-0904	2" front bumper discharge Elkhart Electric valve. Include Elkhart electric valve, plumbing, and harness from the valve to joystick control located in cab console. Discharge to terminate and capped off just below the center of the bumper for dealer supplied and installed joystick, and bumper turret.	$2,125
4430-0014	Hale 2.1A FoamLogix foam system.	$6,274
4430-0015	Hale 3.3 FoamLogix foam system.	$13,328
4430-0079	The foam system performance shall be tested and certified in compliance with 2009 NFPA 1901.	$252
4432-0165	Special design foam/water manifold to allow dealer supplied foam system to be plumbed to crosslay 1, crosslay 2 and rear discharge so they are foam ready.	$3,358
4435-0001	Class 1 Intelli-Tank water tank level gauge.	$428
4435-0002	Class 1 Intelli-Tank foam tank level gauge.	$443
4435-0013	4.5" Class 1 compound pressure gauge (30-0-600 PSI).	$169
4435-0014	Dual Read 4.5" Pressure Gauge (30-0-600 psi/100-0-4140 KPA).	$253
4435-0015	2.5" Class 1 compound pressure gauge (30-0-600). Discharge(s): [#LOC].	$121
4435-0016	Dual Read 2.5" Pressure Gauge (30-0-600 psi/100-0-4140 KPA). Discharge: [#LOC].	$171
4435-0069	Class 1 Enfo IV system on pump operator's panel.	$818
4435-0155	Dual Read 4.5" Span Pressure Gauge (30-0-600 psi/100-0-4140 KPA)	$253
4435-0156	Class 1 Intelli-40 Tank Water Tank Level Gauge with Blue LED's.	$641
4435-0157	Class 1 Intelli-40 Tank Foam Tank Level Gauge with Red LED's.	$612
4435-0161	Dual Read 4.5" Pressure Gauge (30-0-400 psi/100-0-2758 KPA)	$253
4435-0187	Class 1 Intelli-40 Tank Water Tank Level Gauge with Red LED's.	$657
4440-0005	2.5" Left Intake Akron Manual Valve.	$972
4440-0006	2.5" right intake Akron manual valve.	$972
4440-0014	5" front intake without valve.	$3,093
4440-0130	2.5" Right Intake w/3" Akron Manual Valve. Location: (REAR OF STREAM)	$1,486
4440-0131	2.5" Right Side intake Akron manual valve. Locate valve down low and the handle to be horizontally.	$1,119
4440-0138	2.5" right intake Akron manual valve with chrome plated end.	$1,015
4440-0140	2.5" right intake Akron manual valve, located rear of steamer IPO standard location.	$972
4445-0004	Front intake swivel 5" polished chrome.	$1,838
4445-0005	Front intake swivel 6" polished chrome.	$1,911
4445-0009	Intake relief valve, Akron.	$403
4445-0016	Intake relief valve, Hale 2.5".	$555
4445-0024	Intake adapter 5" FNPT x 5" MNST for front intake.	$342
4445-0048	Intake pressure relief valve, Task Force Tips.	$389
4450-0010	2" tank fill Akron manual valve.	$966
4450-0022	3" tank to pump Akron manual valve.	$1,017
4460-0034	Cab jack access door. Located on officer side pump panel in upper rearward area. Includes twist and turn latch.	$225
4460-0044	Cab jack access door. Located on officer side pump panel in forward area. Includes twist and turn latch.	$225
4460-0067	Officer side pump panel shall include an access door to provide access to the cab tilt switch and manual jack as mounted.	$171
4465-0005	Class 1 Captain pressure governor.	$2,555
4475-0000	Pump certification 750-2250 GPM	$2,265
5000	**Electrical**	
5010-0013	Vehicle data recorder - 2009 NFPA compliant. Includes occupant detection with display. Display location: [#LOC].	$2,252
5010-0015	Additional CrewGuard display for use with VDR. Location: [#LOC].	$433
5010-0024	Modem for use with the E-ONE multiplex electrical system.	$559
5010-0039	V-MUX Electrical system for aerials.	$5,085
5010-0059	VFD Text display for V-MUX electrical system. Location: [#LOC].	$694
5050-0017	Body 110 volt outlets shall have a dedicated breaker within the breaker box for no more than every (2) body mounted receptacles (single outlet, duplex, etc. as applicable). This is to provide multiple isolated circuits as required that carry no more than (2) receptacles located throughout the body.	$460
5100-0000	Foot switch to control air horns located [#LOC].	$103
5100-0001	Switch circuit three way. Includes (1) additional switch. An additional switch required for more than two locations. Location: [#LOC].	$145
5100-0006	Foot switch to control Q2B located [#LOC].	$103
5100-0007	Foot switch to control electronic siren located [#LOC].	$103
5100-0011	Switch 12V for 120-240V (EA). Location: [#LOC].	$373
5100-0095	Switching controlled through the Multiplex display for 120-240V devices (EA). The 120-240V Multiplex switching utility shall be used for: [#LOC].	$373
5100-0098	Switch additional rocker lock-out safety style. Location and function: [#LOC].	$175

5110-0017	Back-up alarm 97 dB.	$89
5110-0073	12V Outlet on officer side in cab.	$150
5130-0001	Cord reel electric with 200' of 10/3 black cable. Locate [#LOC].	$1,892
5130-0007	Cord connector. Daniel Woodhead 3 wire NEMA 5-15 straight blade female located on cord for reel in [#LOC].	$71
5130-0008	Cord connector. Daniel Woodhead 3 wire NEMA L5-15 twist lock female located on cord for reel in [#LOC]	$73
5130-0009	Cord connector. Daniel Woodhead 3 wire NEMA L5-20 twist lock female located on cord for reel in [#LOC].	$100
5130-0014	Circle D wall/floor mounting box. Locate box for use with reel in or on [#LOC].	$127
5130-0022	Cord reel rollers mounted through panel. Location(s): [#LOC].	$308
5130-0024	Electric cord reel rewind switch. Switch located [#LOC].	$103
5130-0028	Cord reel rollers mounted on reel.	$308
5130-0033	Junction box Circle D with four (4) 3-wire NEMA 5-15 110 Volt 15 amp straight blade receptacles. Located on cord for reel in [#LOC].	$652
5130-0094	Cord reel electric with 200' of 10/3 black cable model ELFCR1622-14-16. Locate [#LOC].	$1,892
5150-0006	Whelen 600 series LED horizontal mount tail lights. Includes LED stop/tail, arrow turn and halogen back-up lights with horizontal Cast 3 housing and weatherproof connectors.	$1,185
5150-0017	License plate light LED with chrome housing located at the rear of the body.	$119
5150-0023	Weldon Model 1010 LED / incandescent tail lights. Includes red LED stop/tail, amber LED turn and clear incandescent back-up.	$485
5150-0026	Marker light LED body/cab package. E-ONE custom cab with aerial ladder, Mid-Mount platform or Bronto bodies only.	$1,263
5150-0062	Federal Signal QuadraFlare LED horizontal mount taillights. Includes LED stop/tail, arrow turn and backup lights with horizontal Cast 3 housing and weatherproof connectors.	$1,174
5150-0107	Whelen arrow turn signals, front and rear as applicable, to be set to sequential flash pattern.	$21
5150-0124	The amber LED marker light on each side front of body just in front of rear wheels shall be upgraded to an amber Trucklite LED clearance/auxiliary turn light IPOS (clearance only no turn).	$160
5150-0134	License plate light incandescent with chrome housing located at the rear of the body.	$119
5200-0001	Breaker box 12 place single phase. Includes main breaker. Note: If gen is 6KW or less, main will occupy 2 places leaving 10 available. Locate [#LOC].	$792
5250-0037	Generator Smart Power 8KW hydraulic model HR-8 (with top mount cooler). Includes generator control/PTO engagement switch and a gauge panel located adjacent to the circuit breaker box. Generator location: [#LOC].	$14,095
5250-0038	Generator Smart Power 10KW hydraulic model HR-110 (with top mount cooler). Includes generator control / PTO engage switch and a gauge panel located adjacent to breaker box. Generator location: [#LOC].	$15,487
5250-0069	Dealer installed Smart Power 8KW hydraulic model HR-8 (with top mount cooler) generator located [#LOC]. Option includes space only. Dealer responsible for NFPA required 3rd party generator testing.	$267
5255-0001	3rd party generator test with pump.	$80
5300-0015	Light bars Federal Signal ADX2201 LED (PR) with red lenses. Location: [#LOC].	$2,750
5300-0023	Light bars Federal Signal 22I (PR). Location: [#LOC].	$996
5300-0084	Whelen Mini-Freedom LED light bars (PR) model FNMINI 24" with red/clear lenses and MKEZ7 mounts. Location: [#LOC].	$3,960
5300-0157	Whelen Mini-Freedom LED light bars (PR) model FNMINI 24" with clear lenses and MKEZ7 mounts. Location: [#LOC].	$3,960
5310-0000	Light bar Federal Signal, Signal Master SML6. Location: installed at the rear of the apparatus.	$789
5310-0012	Diamond plate shield over rear directional light.	$282
5310-0025	Directional light circuit wiring through upper level warning.	$68
5310-0045	Light bar Federal Signal Signal Master Viper EXT LED 31" with 6 lights.	$1,422
5350-0240	Intercom aerial 3-way. Atkinson Dynamics (Federal). The intercom system shall be installed to provide communications between the turntable control station, the driver side front compartment face (pump panel area) and the aerial tip.	$2,776
5380-0009	Compartment light package incandescent for medium bodies.	$667
5380-0012	Compartment light package Truck-Lite LED for medium bodies.	$2,664
5380-0027	Ground light package for cab and body - small.	$415
5380-0029	Ground light package for cab and body - large.	$622
5380-0032	Ground light package LED - large.	$2,030
5380-0035	Step light package body - large.	$580
5380-0036	Step light package body LED - small.	$1,328
5380-0140	Compartment light ROM V3 LED for medical cabinet (EA).	$288
5380-0202	Step light package body EON LED - large.	$1,065
5380-0203	Step light package body EON LED - small.	$842
5380-0210	Compartment light ROM V3 LED for medical cabinet (PR).	$575

5380-0218	Step light package Whelen LED - small.	$1,519
5380-0220	Compartment light package, Whelen Fluorent Plus, for medium bodies. Includes two lights per compartment (four if transverse).	$6,488
5390-0002	Hose bed light Federal Signal GH Scene. Locate at the front area of hose bed. Switched with work light switch in cab.	$206
5390-0005	Crosslay light deck Unity. Locate to rear of crosslay (SM) or forward of crosslay (TM).	$155
5390-0007	Deck/scene light circuit wiring through chassis reverse. Requires rear deck or scene light.	$68
5390-0008	Federal Signal GH scene lights (PR). Switch in cab (driver and officer side facing lights switched separately). Locate [#LOC].	$386
5390-0025	Cab scene lights are to be switched with cab doors in addition to standard.	$68
5390-0048	Whelen 600 series gradient Super LED scene lights (PR) with weatherproof connectors. Switch in cab (driver and officer side lights switched separately). Locate [#LOC].	$893
5390-0076	Hose bed light Truck-Lite LED model 81380. Locate at front of hose bed. Switched with work light switch in cab.	$179
5390-0102	Crosslay light Truck-Lite LED model 81380. Locate to rear of crosslay (SM) and forward of crosslay (TM as applicable). Switched with work light switch in cab.	$179
5390-0129	Hose bed light FRC LED900 with diamond plate mounting box. Locate [#LOC]. Switched with worklight switch in cab.	$812
5390-0131	Crosslay light deck Unity. Locate light on the drivers side rearward of the crosslay door mounted on the Hot Shot II pan cover lid.	$155
5390-0132	Warning light Federal Signal QL64-BACKUP (PR) white with clear lens. Surface mounted with bezel. Location: [#LOC]	$543
5390-0143	Crosslay light deck Unity. Locate to driver side rear of crosslay.	$155
5400-0003	Engine compartment light (EA).	$111
5400-0010	Incandescent pump compartment light (EA).	$120
5400-0011	LED pump compartment light (EA).	$325
5400-0037	Dome Lts Red/White Incandescent. Package includes two lights mounted in the front and two mounted in the rear of the cab. White light wire through door and light assembly mounted switch. Red light through light assembly mounted switch.	$486
5400-0038	Spotlights, 6" Unity (PR) cab post mount.	$398
5400-0039	Spotlight Specialty 2150 hand held located on officer's side of cab dash - hardwired.	$340
5400-0042	Map light, Sunnex [#LOC].	$290
5400-0047	Pump panel light package with (3) lights per side pump panel. Pump panels over 45" may require additional lights. Side mount only.	$569
5400-0065	Map light, Littlite 18" flexible LED. Location: [#LOC].	$225
5400-0092	Weldon pump panel LED light package with (3) lights per side pump panel. Pump panels over 45" may require additional lights. Side mount only.	$825
5400-0130	Spotlight Optronics Blue Eye model KB4000 hand held located on officer's side of cab dash - hardwired.	$203
5400-0148	Maplight-Little Lt 12" Flex LED. Location: [#LOC].	$225
5400-0151	Pump compartment light EON LED. Wired to work light.	$194
5400-0158	Spotlights, 6" Unity LED (EA) cab post mount. Location: Officer side cab A post.	$464
5400-0164	Spotlights, 6" Unity LED (PR) cab post mount.	$928
5400-0165	Pump compartment light EON LED. Light shall be switched from the cab dash with the work light switch.	$194
5400-0168	Whelen LED pump compartment light (EA).	$247
5450-0004	Quartz light KwikRaze 500W/110V model KR-SB-505-W/2-I with external telepole. Location(s): [#LOC]	$955
5450-0049	Quartz light MagnaFire 750W/120V model KR-SB-536-W/2-I with external pole. Location(s): [#LOC].	$1,185
5450-0052	Quartz light MagnaFire 750W/120V model KR-1536 with cab brow mount. Location(s): [#LOC].	$739
5450-0144	Fire Research Evolution 12V LED scene light model FCA530-V15-SW-H with external push-up pole. Includes switch in cab accessible to driver. Location: [#LOC].	$2,062
5450-0154	Fire Research Evolution 12V LED scene light model FCA510E-V15-SW with internal pull-up pole. Includes switch accessible to driver. Location: [#LOC].	$2,062
5450-0155	Fire Research Evolution 12V LED scene light model FCA802-V15 with brow mount. Includes switch accessible to driver (driver and officer side facing lights switched separately). Location: [#LOC].	$1,775
5450-0156	Quartz light Fire Research Evolution 12V LED model FCA300U-V15 with brow mount. Includes switch accessible to driver. Location: center of cab brow.	$1,711
5450-0161	Light Whelen 12V Pioneer model PCP2 with internal push-up pole mount (Havis KR-SB-4PCP2-S-I). Includes switch on light head. Location(s): [#LOC].	$2,083
5450-0190	Fire Research Spectra 12V LED model SPA260-Q15 with surface mount. Includes switch accessible to driver. Location: [#LOC].	$1,661

5450-0191	Light Fire Research Spectra 120V LED model SPA600-K20-ON-SPA603 with 40" telescopic tripod pole. Location(s): :[#LOC].	$2,844
5450-0201	Light Fire Research Spectra LED 12V model SPA570-Q20 without pole. Includes switch accessible to driver (driver and officer side facing lights switched seperately). Location(s): [#LOC].	$2,280
5450-0202	Quartz light Fire Research Spectra 120V LED model SPA260-K15 with surface mount. Includes switch accessible to driver (driver and officer side facing lights switched separately). Location: [#LOC].	$2,007
5450-0209	Quartz light Fire Research Spectra 12V LED model SPA802-Q20-02 powder coated black with brow mount. Includes switch accessible to driver. Location: [#LOC].	$2,199
5450-0223	Quartz light MagnaFire 750W/120V model KR-SB-536-W/2-I with external pole. Light head to be powder coated black. Location(s): [#LOC].	$1,230
5470-0000	Receptacle twist lock 15A/110V 3 wire NEMA L5-15 with cover plate. Location: [#LOC].	$274
5470-0001	Receptacle twist lock 20A/110V 3 wire NEMA L5-20 with cover plate. Location: [#LOC].	$286
5470-0004	Receptacle household 20A/110V duplex 3-prong NEMA 5-20 with cover plate interior mounted wired to inlet receptacle. Location: [#LOC].	$269
5470-0017	Receptacle household 20A/110V duplex 3-prong NEMA 5-20 with cover plate. Location: [#LOC].	$260
5470-0051	6 outlet household 20A/110V power strip wired to inlet receptacle. Location: [#LOC].	$187
5470-0053	Receptacle inlet 110 VAC, 20 Amp twist lock with a [#COL] cover. Location: [#LOC].	$250
5470-0057	Receptacle household 20A/110V duplex 3-prong NEMA 5-20 with cover plate interior mounted wired to generator (not wired to inlet/shoreline). Location: [#LOC].	$260
5500-0009	Federal PA300 electronic siren recessed mounted.	$622
5500-0011	Federal Q2B siren - Pedestal mounted on bumper. Location: [#LOC].	$2,396
5500-0015	Whelen model 295SLSA1 siren with microphone (replaced 295HFSA1).	$824
5500-0048	Federal PA300 100W siren recessed mounted.	$582
5500-0051	Federal PA300R siren with single control. PA control and volume switch located on electrical access panel.	$747
5500-0052	Federal PA640 electronic siren recessed mounted.	$622
5500-0066	Whelen model 295SLSA1 siren without microphone.	$824
5510-0018	Whelen SA122FMP electronic siren speaker recessed in front bumper. Location: [#LOC].	$499
5510-0029	Speaker, Federal Signal Dynamax ES100 with "E-ONE" grille through bumper. Location: [#LOC].	$482
5510-0041	Speaker, Federal Signal Dynamax ES100. Location: [#LOC].	$482
5510-0045	Speaker, Federal Signal Dynamax ES100 with "E-ONE" grille. Location: [#LOC].	$482
5550-0054	Whelen 600 series Super LED lower level warning light package. Includes (10) red LED light heads w/chrome flanges. Locate side facing lights: [#LOC].	$2,693
5550-0055	Federal Signal QuadraFlare LED lower level warning light package. Includes (10) QL64XF-R LED light heads with bezels. Locate side facing lights: [#LOC].	$2,251
5550-0067	Flash rate for Federal QuadraFlare LED lower level warning lights to be set at pattern 4, alternating quad flash (75 QFPM).	$79
5550-0251	Whelen 600 series Super LED lower level warning light package. Includes (10) LED light heads w/chrome flanges. (5) Red, (5) blue alternating. Locate side facing lights: [#LOC].	$2,693
5550-0252	Whelen 600 series Super LED lower level warning light package. Includes (8) red LED light heads with clear lenses and (2) split red/blue LED light heads with clear lenses. Locate side facing lights: [#LOC].	$2,739
5600-0034	Federal model SY12FS Sentry (PR) with [#COL] domes. Location: [#LOC].	$347
5600-0078	Whelen Super LED beacon (PR) model L31H with [#COL] domes. Location [#LOC].	$1,674
5600-0080	Whelen beacon with LED upper beacon and 700 series Super LED (PR) model B6LED with red domes and [#COL] LEDs. Location: [#LOC].	$2,565
5600-0177	Whelen model UFM8 LED flasher (3). Flashers will control warning lights ipo internal flashers. Locate (1) in cab and (2) in body.	$1,496
5600-0284	Whelen Super LED beacon (PR) model L31H with blue driver, red officer LED and clear domes. Location [#LOC].	$1,674
5600-0303	Whelen Super LED beacon (PR) model L31H with [#COL] domes. Location [#LOC].	$1,674
6000	**Aerial**	
6100-0005	Ladder HP75 with waterway. Includes left side console with cover, split steps at tip and jack leg flood lights.	$169,524
6150-0003	Gauge aerial hydraulic oil level. Electronic display to be located [#LOC].	$512
6300-0002	Monitor Akron electric 1000 GPM for ladder. Includes tip and base controls.	$10,083
6300-0042	Monitor Akron electric 1500GPM for ladder. Includes tip and base controls. Side sweep limited to 45 degrees.	$10,561
6300-0053	Monitor Akron electric 1250GPM for ladder. Includes tip and base controls. Side sweep limited to 45 degrees.	$10,083
6350-0000	Pinned waterway - upgrade. Waterway pins to section 2 or 3 on HP75 / HP78 and pins to section 3 or 4 on HM100 and CR100.	$6,511
6350-0001	Nozzle Guard.	$679

6350-0005	Rear 4" NST waterway inlet for rear mounted aerials. Includes chrome cap.	$897
6350-0006	2.5" Waterway Class 1 pressure gauge 30-0-600. Locate next to waterway inlet.	$173
6350-0010	Flowminder with single readout and totalizer for the aerial waterway to be located at the aerial control station.	$2,188
6350-0042	Dual read 3.5" Waterway Class 1 pressure gauge (30-0-400 psi/100-0-2758 KPA). Locate next to waterway Inlet.	$232
6350-0044	3.5" Waterway Span pressure gauge 30 to 600. Locate next to waterway inlet.	$197
6350-0048	Waterway shut-off valve 4" Akron elect model 9313. Mounted to allow waterway inlet to be used as a discharge. Master control to be located adjacent to the auxiliary waterway inlet, slave control located on turntable console.	$4,262
6350-0050	2.5" Pressure Gauge Dual Read (30-0-600 psi/100-0-4140 KPA). Locate next to waterway inlet Color: [#COL].	$172
6500-0011	Pike pole tube for 6' pole on ladder. Location: [#LOC].	$231
6500-0012	Pike pole tube for 8' pole on ladder. Location: [#LOC].	$231
6500-0019	Axe bracket mounted on aerial. For use with a 6 lb. axe only. Location: [#LOC].	$387
6500-0074	Axe bracket mounted on aerial. For use with a 8 lb axe only. Location: [#LOC].	$502
6550-0001	Outrigger warning lights (PR) LED. Truck-Lite model 91R.	$290
6550-0011	Outrigger warning lights (PR). Weldon Model 1010.	$99
6560-0001	Ladder climbing lights. Lens colors shall be [#COL].	$2,322
6560-0002	Spot light 12V located [#LOC].	$384
6560-0005	Flood lights Unity at base (PR).	$450
6560-0009	Quartz light 500W at tip. Hardwired. Requires 110V twist lock at tip option. The light shall be located [#LOC].	$315
6560-0012	Quartz light 750W Magnafire model KR636-S. Requires 110-volt receptacle at tip option. The light shall be located [#LOC].	$979
6560-0028	Grille guard for Magnafire light(s) on aerial.	$136
6560-0029	Ladder climbing lights Truck-lite LED. Lens colors shall be [#COL].	$2,608
6560-0049	Collins light FX-HID at base (PR).	$1,223
6560-0062	Fire Research Evolution 12V LED model FCA570-V15-ON without pole. The light shall be located [#LOC].	$1,845
6560-0063	Light Whelen Pioneer Plus model PFP2AC with permanent mount (ROM model KR-SB-6PFP2AC). Requires 110-volt receptacle at tip option. Location(s): [#LOC].	$1,862
6560-0064	Light Whelen Pioneer Plus PFP1AC. Model KR-SB-6PFP1AC-S. Requires 110 volt twist lock receptacle at tip option. Location(s): [#LOC].	$1,358
6560-0092	Wire guard for FRC Evolution light(s) on aerial. Location: [#LOC].	$132
6560-0093	Light Whelen Pioneer Plus model PFP2AC powder coated black with permanent mount (ROM model KR-SB-6PFP2AC) powder coated black. Requires 110-volt receptacle at tip option. Location(s): [#LOC].	$1,862
6570-0003	110V/15A twist lock receptacle at tip.	$2,480
6570-0008	Intercom aerial 2-way. Atkinson Dynamics (Federal). Speaker to be located to rear of platform on Bronto units.	$1,385
6570-0009	Intercom aerial 3-way. Atkinson Dynamics (Federal). Speaker to be located to rear of platform on Bronto units.	$2,776
6570-0015	110V/20A twist lock receptacle at tip.	$2,480
6570-0034	Additional 110V/20A twist lock receptacle at tip. Requires 110v to tip option. Location: opposite standard at tip.	$286
6570-0035	110V/15A twist lock receptacle at tip. Wiring from breaker box to tip to be 220V.	$2,574
6570-0039	110V/20A twist lock receptacle at tip. Wiring from breaker box to tip to be 220V.	$2,574
6570-0040	110V/30A twist lock receptacle at tip.	$2,574
6570-0042	120V/250V 20A Daniel Woodhead Non-NEMA model 67W08 receptacle at tip.	$2,826
6570-0043	110V/20A twist lock receptacle at tip. Receptacle power is provided via inlet receptacle (not generator/breaker box). Includes a [#COL] cover. Location: [#LOC].	$2,574
6600-0002	Roof ladder bracket J style mount. Locate outside base section for a [#LOC]. Available on HP75/78, HP100, and HP95.	$1,640
6750-0000	Aerial sign plates 10 x 144 (PR). Available on Booms, HP75 and HP100 only. Does not include lettering. Color: [#COL].	$1,347
6850-0002	Pump panel control station. HP75 / HP78 and 50' rear mount boom.	$3,183
6850-0004	Short Jack System HP75 / HP78.	$7,457
6900-0000	Aerial flow test - 3rd party.	$399
6900-0002	Aerial 2009 NFPA Certification.	$3,219
7000	**Loose Equipment**	
7600-0005	Pike Pole Fiberglass 6'.	$123
7600-0006	Pike Pole Fiberglass 8'.	$81
7600-0007	Pike Pole Fiberglass 10'.	$156
7600-0008	Pike Pole Fiberglass 12'	$165

7600-0015	Wheel Chocks 32" NFPA Compliant - Pair of Zico AC-32. Up to 32" diameter Tires. Includes mounting bracket.	$413
7600-0016	Wheel chocks 44" NFPA complaint, pair (PR) of Zico SAC-44. Up to 44" diameter tires. Includes mounting brackets.	$465
7600-0111	Pike Pole 12 Ft. Akron PP-12 with USA standard hook.	$153
7600-0112	Pike Pole 8 Ft. Akron PP-8 with USA standard hook.	$128
7600-0113	Pike Pole 6 Ft. Akron PP-6 with USA standard hook.	$116
7800-0002	Alco-Lite FL-10, 10' folding ladder without shoes.	$228
7800-0003	10' folding Duo-Safety 585-A ladder.	$356
7800-0007	Alco-Lite PRL-14' roof ladder.	$389
7800-0010	Alco-Lite PRL-16' roof ladder.	$466
7800-0014	Alco-Lite PEL-16 Extension Ladder	$631
7800-0016	Alco-Lite PEL-24' 2-section extension ladder.	$794
7800-0021	Alco-Lite PEL-28' extension ladder.	$1,031
7800-0023	Alco-Lite PEL3-35' 3-section extension ladder.	$1,403
7800-0024	Alco-Lite PEL-35' extension ladder.	$1,280
7800-0027	Little Giant model 17 ladder.	$652
7800-0031	Little Giant Model 22 ladder.	$617
7800-0032	Alco-Lite FL-10, 10' folding ladder w/safety shoes.	$228
7800-0044	Alco-Lite PEL-12 Extension Ladder	$534
7800-0047	Duo-Safety 925-A 26' 3 Section Extension Ladder	$948
7800-0056	Alco-Lite TEL-35 Extension Ladder	$1,704
7800-0069	Alco-Lite PEL3-35P Extension Ladder w/Stay Poles.	$1,484
7800-0070	Alco-Lite PEL3-30 3 Section Extension Ladder	$1,188
7800-0077	Duo-Safety 925-A 22' 3 Section Extension Ladder	$929
7800-0078	Alco-Lite FL-10, 10' folding ladder without shoes and handles.	$228
7900-0014	DOT Required Drive Away Kit - Kit includes three (3) triangular warning reflectors with carrying case. This kit is for the end user and is to remain with the truck.	$25
7900-0120	HeartStart OnSite Automated External Defibrillator. Unmounted.	$1,841
7900-0155	Junkin model JSA-300PCW stokes basket. Ship loose.	$687
7900-0156	Multiplex adapter kit. Includes 6' harness with 9 pin plug/Deutsch ends and a USB to CAN interface module.	$264
7900-0217	Wheel Chocks 32" NFPA Compliant - Pair of Zico AC-32. Up to 32" diameter tires.	$252
7900-0218	Wheel chocks 44" NFPA complaint, pair (PR) of Zico SAC-44. Up to 44" diameter tires.	$534
7900-0228	V-MUX Electrical system diagnostic kit.	$763
8000	**Paint & Lettering**	
8100-0071	Undercoating E-ONE.	$260
8100-0088	Painted trim stripe on chassis wheels (per axle). Color to be: [#COL].	$157
8100-0176	Paint E-ONE chassis cab - Sikkens paint. Color: [#COL].	$4,984
8100-0177	Paint cab Sikkens two-tone. Upper area of cab to be painted [#COL].	$1,122
8100-0183	Paint Body - Large - For Aerials, T/A Tankers/Wetsides, Rear Mounts and Rescues. Sikkens paint. Color: [#COL].	$3,798
8100-0232	Paint aerial monitor / nozzle guard high visibility orange.	$238
8100-0388	Chassis fuel tank to have undercoating applied prior to installation on frame.	$181
8200-0000	Scotchlite Letter (Each) - 3". Color [#COL].	$7
8200-0001	Scotchlite Letter (Each) - 6". Color [#COL].	$9
8200-0002	Scotchlite Letter (Each) - 9". Color [#COL].	$10
8200-0003	Scotchlite Letter (Each) - 12". Color [#COL].	$10
8200-0006	Maltese cross 12" (Pair).	$1,006
8200-0007	Sign Gold Letter (Each) - 3"	$11
8200-0008	Sign Gold Letter (Each) - 6"	$16
8200-0009	Sign Gold Letter (Each) - 9"	$25
8200-0010	Sign Gold Letter (Each) - 12"	$25
8200-0011	Scotchlite Letters (60) - 3". Color [#COL].	$678
8200-0012	Sign Gold Letters (60) - 3".	$986
8200-0013	Shade for lettering.	$3
8200-0015	White reflective tape on (2) outriggers.	$194
8200-0020	Sign Gold Letters (90) - 3".	$1,312
8200-0022	Shade and outline for lettering.	$4
8200-0029	Scotchlite Letter (Each) - 10". Color [#COL].	$11
8200-0033	Scotchlite letter (each) - 8". Color [#COL].	$11
8200-0049	3" Scotchlite Letters (60).	$918
8200-0073	Sign Gold Letter (Each) - 3". Sign Gold to be small turn style.	$14
8200-0086	Sign Gold Letter (Each) - 16".	$31

8300-0002	NFPA Scotchlite Stripe - 4" wide and straight on front/sides of cab and sides/rear of body. Color: [#COL]. Location: [#LOC].	$647
8300-0003	NFPA Scotchlite Stripe - 6" wide and straight on front/sides of cab and sides/rear of body. Color: [#COL]. Location: [#LOC].	$654
8300-0006	NFPA Scotchlite Stripe - 6" wide with "Z". Stripe straight on front, sides and rear of cab and body. "Z" location to be specified by customer. Color: [#COL]. Location: [#LOC].	$1,036
8300-0011	Scotchlite stripe (PR) 1/2" located 1/2" above and below existing stripe. Color: [#COL].	$482
8300-0012	Scotchlite stripes (4) 1/2" located (2) above and (2) below existing stripe. Stripes to be spaced 1/2" apart. Color: [#COL].	$958
8300-0013	NFPA Scotchlite Stripe - 2" and 4" wide with "Z". Stripe straight on front, sides and rear of cab and body. "Z" location to be specified by customer. 2" above 4" with 1" gap between stripes. Color: [#COL]. Location: [#LOC].	$1,463
8300-0016	Paint Break Sign Gold Chassis Stripe - 3/4" Wide - Black, Gold, Black. To be located above existing paint break.	$337
8300-0025	1/4" Pin stripe above and below existing Scotchlite stripe. Color: [#COL].	$773
8300-0026	Scotchlite stripe 1" located 1" above and below existing stripe. Color: [#COL].	$577
8300-0027	NFPA Scotchlite 4" wide hockey stripe, straight across front and may contour as it transitions from cab to body on each side. Color: [#COL]. Location: [#LOC].	$778
8300-0028	NFPA Scotchlite 6" wide hockey stripe, straight across front and may contour as it transitions from Cab to Body on each side. Color: [#COL]. Location: [#LOC].	$785
8300-0033	NFPA Scotchlite Stripe - 8" wide and straight on front/sides of cab and sides/rear of body. Color: [#COL]. Location: [#LOC].	$809
8300-0039	Scotchlite stripe 1" located .5" above and below existing stripe. Color: [#COL].	$610
8300-0044	Scotchlite stripe 1" located 1" above existing stripe. Color: [#COL].	$305
8300-0048	Paint break Scotchlite chassis stripe - 3/4" Wide - Black, [#COL], Black. To be located above existing paint break.	$589
8300-0071	Paint break Scotchlite chassis stripe - 3/4" Wide - [#COL]. To be located above existing paint break.	$589
8300-0084	Chevron "A" style 6" printed sheet Scotchlite striping on rear of body. Includes rear facing extrusions, panels and doors inboard/outboard of the beavertails (if applicable). Colors to be [#COL].	$1,259
8300-0093	Chevron "A" style 6" printed sheet Scotchlite striping on front bumper. Colors to be [#COL].	$519
8300-0123	Chevron "A" style 6" printed pattern NFPA Scotchlite striping. Provided to driver and officer rear compartment face, smooth plate panels and/or doors outboard and above the center rear compartment opening and the vertical hosebed extrusions (terminate just above the upper handrail stanchion). The vertical and horizontal extrusions inboard of the vertical hosebed extrusions shall remain visible with a sanded finish. Colors to be [#COL].	$495
8300-0179	Chevron "A" style 6" printed sheet Scotchlite striping on rear of body. Includes rear facing extrusions, panels, inboard/outboard of the beavertails (if applicable). Does not include the rear door(s). Colors to be Yellow/Red.	$1,040
8300-0181	Paint Break Sign Gold Chassis Stripe - 3/4" Wide - Black, Gold, Black. Sign Gold to be small turn style. To be located above existing paint break.	$454
8300-0186	NFPA Scotchlite Stripe - 2" and 6" wide with "Z". Stripe straight on front, sides and rear of cab and body. "Z" location to be specified by customer. 2" above 6" with 1" gap between stripes. 6" stripe to have a .25" outline above and below. Color: [#COL]. Location: [#LOC].	$1,463
8300-0191	Paint break Scotchlite chassis stripe - 1/4" Wide - [#COL]. To be located above existing paint break.	$421
8300-0192	NFPA Scotchlite Stripe - 8" and 3" wide with "Z". Stripe straight on front, sides and rear of cab and body. "Z" location to be specified by customer. 8" above 3" with 1.5" gap between stripes. Color: White. Location: center of stripe centered with headlight bezel and straight back.	$1,923
8300-0197	Scotchlite stripe 1" located 1" down from top of stripe and 1" up from bottom of stripe (1"stripes on existing stripe). Color: [#COL].	$610
8300-0198	NFPA Scotchlite Stripe - 8" wide with "Z". Stripe straight on front, sides and rear of cab and body. "Z" location to be specified by customer. Color: [#COL]. Location: [#LOC].	$1,923
8300-0217	NFPA Scotchlite Stripe - 1" and 6" wide with "Z". Stripe straight on front, sides and rear of cab and body. "Z" location to be specified by customer. 1" above 6" with 1" gap between stripes. 6" stripe to have a .25" outline above and below. Color: [#COL]. Location: [#LOC].	$1,463
8300-0220	Paint Break Sign Gold Chassis Stripe - 1" Wide - Black pin stripe, Sign Gold, Black pin stripe. To be located above existing paint break if so equipped or at the same approximate position (when there is not a paint break).	$605
8300-0222	NFPA Scotchlite Stripe - 1", 4" and 1" wide with "Z". Stripe straight on front, sides and rear of cab and body. "Z" location to be specified by customer. 1" above and below 4" with 1" gap between stripes. Color: [#COL]. Location: [#LOC].	$1,463

8300-0223	NFPA Scotchlite Stripe - 6" wide with double pin stripe top and bottom. "Z" Stripe straight on front, sides and rear of cab and body. "Z" location to be specified by customer. Stripe shall be a printed sheet laid out from top to bottom as 1/4" pin stripe, 1/8" gap (wide stripe color), 1/8" pin stripe, 6" wide stripe, 1/8" pin stripe, 1/8" gap (wide stripe color), 1/4" pin stripe. Color: [#COL]. Location: [#LOC].	$1,463
8300-0224	Paint break Scotchlite chassis stripe - 1/2" Wide - [#COL]. To be located above existing paint break.	$482
8300-0225	Paint break Scotchlite body stripe - 1/2" Wide - [#COL]. To be located above existing paint break.	$686
8300-0226	Sign Gold Stripe - 3/4" Wide aerial sign plate - Gold with red pin stripe outline. The striping shall create a border around sign plate lettering.	$1,020
8300-0230	Paint break painted on chassis stripe - 1/8" Wide - [#COL].To be located above existing paint break if so equipped or at the same approximate position (when there is not a paint break).	$1,026
8300-0232	NFPA Scotchlite Stripe - 2" and 4" wide with interlocking "Z". Stripe straight on front, sides and rear of cab and body. "Z" location to be specified by customer. 2" above 4" with 1" gap between stripes. Color: [#COL]. Location: [#LOC].	$1,463
8300-0233	NFPA Scotchlite Stripe - 1", 4" and 1" wide with triple interlocking "Z". Stripe straight on front, sides and rear of cab and body. "Z" location to be specified by customer. 2" above 4" with 1" gap between stripes. Color: [#COL]. Location: [#LOC].	$2,140
8400-0010	Install customer logo from an existing E-ONE design (EA). Location: [#LOC]	$108
8400-0023	Install customer supplied logo. Location: [#LOC].	$61
8400-0025	A customer SignGold logo (up to 12") supplied to E-One in a digital format. Location: [#LOC].	$342
8400-0033	Logo E-ONE (PR) on aerial lift cylinder. Logo to be sign gold material approx 14" long located midway along outward surface of cylinder.	$73
9000	**Delivery / Warranty / Service**	
9300-0018	Manuals, Operator and Service CD-ROM (additional set).	$44
9300-0035	Customer late change order.	$267
9300-0038	Manuals, operator, service and exploded view parts CD-ROM.	$301
9300-0039	Manuals printed (set) with exploded view parts.	$787

Notes:

1) Availability of options are limited by other options selected, and not all options are available in every chassis/apparatus configuration. Selection of an option may require several of the above parts/items to complete the option package.

2) Certain options, alone or in combination with other options, may require heavier axle/suspension packages, longer frames, or reinforced frames at additional cost per the above price list.

3) To configure options, the E-One State Term Schedule authorized dealer will use quote configuration software to select the components necessary to effect the option, feature, or configuration requested and quote the total option price.

Fire Apparatus Quotation for:
STATE OF OHIO TERM SCHEDULE

Quotation Number: 57491 Rev: 13

Unit Description: AERM-TYPH-078L

Quote Description: Aerial Rear Mount Quint, Typhoon, HP78 Ladder

Salescode	Extended Description	Qty
TESTING COMPLIANCE STANDARD		
1001-0015	The E-ONE supplied components of the vehicle shall meet the requirements of NFPA 1901, 2009 edition.	1
BUMPERS		
1160-0000	Bumper 10" stainless steel.	1
1160-0010	1/8" Front Bumper Gravel Shield.	1
1160-0013	16" Front Bumper Gravel Shield Extension.	1
FRAME ASSEMBLY		
1250-0025	Frame 12 x 3.5 x .375 chassis.	1
1250-0026	Frame liner 11.125 x 3.125 x .375.	1
AXLE OPTIONS		
1025-0005	Meritor FL941 front axle 18,700 lb.	1
1025-0028	Koni shock absorbers for front axle - adjustable.	1
1025-0097	Meritor RS-30-185 single rear axle 33,000 lb. capacity. Requires 16.5" x 8.625" cast shoe brakes and 33K suspension.	1
SUSPENSIONS		
1070-0017	Reyco rear spring suspension w/aux 33K rating.	1
WHEEL OPTIONS		
1050-0007	Front axle wheel trim kit. Includes stainless steel lug nut covers (chrome plated plastic if applicable) and center cap with E-ONE logo. Note: Center cap will have an inspection port IPO a logo if equipped with Stemco oil seals.	1
1050-0008	Rear axle (single) wheel trim kit. Includes stainless steel lug nut covers (chrome plated plastic if applicable) and center cap with E-ONE logo. E-ONE custom chassis w/steel wheels will have chrome plated plastic lug covers.	1
1050-0044	Accuride aluminum wheels for front axle (2).	1
1050-0045	Accuride aluminum wheels for rear axle (4).	1

TIRE OPTIONS		
1060-0017	Four Michelin 315 rear tires with XDN2 mud and snow tread.	1
1060-0047	Two Michelin 385 tires model XFE for front axle.	1
1060-0050	Tire pressure monitoring valve stem caps.	1
BRAKE SYSTEMS		
1100-0001	Meritor EX225H 17" disc brakes for front axle.	1
1100-0005	Brake system air 4X2/4X4.	1
1100-0006	Parking brake release mounted on the driver's side lower dash.	1
1100-0036	16.5" x 8.625" P-Cast S-cam brakes for 27,000 - 33,000 Meritor axle.	1
AIR SYSTEM OPTIONS		
1110-0000-001	Inlet for air system. Location: driver door jamb.	1
1110-0002	Air dryer Bendix AD-9.	1
1110-0006	Air lines nylon.	1
1110-0026	Air horns recessed in bumper (PR).	1
1110-0027	Isolated air tank. Includes pressure protection valve.	1
1110-0043	Auxiliary air tank to be plumbed to the following optional accessories (if equipped): Chassis air horns, brake system air outlet, air reel, light tower and or customer/dealer supplied pneumatic add-on(s).	1
ENGINES & TRANSMISSIONS		
1200-0017	Push-button transmission shift selector.	1
1200-0020	TransSynd synthetic transmission fluid for EVS3000.	1
1200-0096	Electronically limited speed to 60 MPH.	1
1200-0235	Eng/Trans Cummins ISL 400HP/EVS3000 2013 EPA compliant engine.	1
SECONDARY BRAKING		
1125-0002	Jacobs engine compression brake.	1
COOLING PACKAGE		
1800-0013	Cooling system for use with Cyclone II X, Typhoon X, and Quest chassis. For use with 2010/2013 EPA engines. Includes coolant recovery system.	1
FUEL SYSTEMS		
1350-0003	Fuel system 50 gallon.	1
1350-0011	Fuel pump electric w/re-prime.	1
1350-0022	Fuel line hose rubber.	1
ALTERNATOR		
1700-0005	Alternator Leece Neville 320 amp. 320 amp SAE/275 amp NFPA.	1
BATTERIES		

1400-0002	Battery four group 31 1000 CCA.	1
CHASSIS OPTIONS		
1680-0005	Thermatic fan clutch.	1
1680-0006	Drivelines 1710.	1
1680-0012	Tow eyes rear frame painted.	1
1680-0042	Tow hooks front painted in the down position.	1
1680-0051	Aerial hydraulic activation system.	1
1680-0250-M58	Diesel Exhaust Fluid (DEF) 5 gallon tank for 2013 EPA engines. Location: left side below rear of cab.	1
CAB MODEL		
1520-0013	Typhoon X medium cab with 58" CA	1
CAB ROOF TYPE		
1615-0010	Cab roof to be "flat" (non-vista).	1
CAB BADGE PACKAGE		
1610-0000	Cab and body to have applicable E-ONE logos.	1
GRILLE		
1620-0004	ABS chrome plated grille.	1
CAB DOOR OPTIONS		
1550-0003	Rear crew cab doors in the medium position.	1
1550-0005	Driver and officer cab door windows. Include forward vent windows.	1
1550-0011	Rear crew cab door windows. Includes manual roll-down actuation. Not available with paddle style door latching.	1
1550-0016	Cab door panels ABS.	1
1550-0025	All cab doors shall have "L" style exterior latches.	1
1550-0027	Front cab door windows to manually roll down.	1
1550-0037-659	(4) Incandescent cab step area lighting. Locate each light in on each cab door in the inboard position. Lights to be switched with door ajar.	1
1550-0044	All cab door kick plates to be made from diamond plate aluminum.	1
1550-0059-000-72	Reflective Yellow/Red printed striping positioned in the "A" formation located in the lower cab door panels.	1
1550-0077	Interior cab door locks - manual. Will be individually actuated from each respective door. Includes barrel style key lock on each exterior cab door.	1
1550-0084	All cab exterior access doors to have 1250 keyed locks.	1
CAB STEP OPTIONS		
1640-0000-158	Step below cab door. Located driver's front door. Steps under front cab doors shall not interfere with approach angle.	1
1640-0000-159	Step below cab door. Located officer's front door. Steps under front cab doors shall	1

	not interfere with approach angle.	
1640-0000-160	Step below cab door. Located driver's rear door. Steps under front cab doors shall not interfere with approach angle.	1
1640-0000-161	Step below cab door. Located officer's rear door. Steps under front cab doors shall not interfere with approach angle.	1
MIRRORS		
1670-0003	Velvac 2010 mirrors. Door mounted west coast style with remote control and heat.	1
MISC EXTERIOR CAB OPTIONS		
1550-0020	Windows cab side fixed driver's side.	1
1550-0033	Windows cab side fixed officer's side.	1
1675-0022	Pair of 18" handrails located just behind driver and officer front door one each side.	1
1675-0023	Pair of 18" handrails located just behind driver and officer rear door (ALS doors if equipped) one each side.	1
1675-0030	Mud flaps, front, black with E-ONE logo.	1
1675-0047	Rear cab wall to be 3/16" aluminum diamond plate.	1
HVAC		
1515-0017	Air conditioning for the Typhoon X, CII X and Quest with Cummins ISC/ISL engine, radiator mounted condenser.	1
1685-0057	Heaters rear with covers (PR), and front heater with heat to the feet for the driver	1
HVAC		
	and officer.	
SEATS		
1510-0003	Seats, Inc. brand 911 cab seats.	1
1510-0007	Seat cover material vinyl.	1
1510-0008	Seat color gray.	1
1510-0035-147	Universal air pack bottle bracket (EA). Location: officer's seat.	1
1510-0035-148	Universal air pack bottle bracket (EA). Location: rear facing driver's side.	1
1510-0035-151	Universal air pack bottle bracket (EA). Location: inboard driver's side rear wall.	1
1510-0035-152	Universal air pack bottle bracket (EA). Location: inboard officer's side rear wall.	1
1510-0035-215	Universal air pack bottle bracket (EA). Location: rear facing officer's side.	1
1510-0038	Driver seat 911 air ride.	1
1510-0042	Officer seat to be 911 fixed SCBA.	1
1510-0050	Rear facing 911 seat with SCBA driver's side.	1
1510-0053	Rear facing 911 seat with SCBA officer's side.	1
1510-0062	Two man bench centered on rear wall with 911 SCBA backs.	1
1685-0033	Seating capacity tag of six occupants.	1

MISC INTERIOR CAB OPTIONS		
1685-0000	Cab interior gray. Does not include engine cover or seat color.	1
1685-0005	Lexan sun visors, driver and officer's side overhead.	1
1685-0168	ABS Dash package. Includes center and officer side dash, lower kick panels and "A" post covers.	1
1685-0187	Severe duty engine cover, molded polyurethane.	1
CAB ELECTRICAL OPTIONS		
1750-0013-172	Turn signal Whelen 600 LED amber arrow pair located upper headlight bezel.	1
1750-0029	Switch horn button two position DOT/air horn.	1
1750-0046-195	Cab Headlights. Position: lower.	1
1750-0059-179-04	Receptacle inlet 20 amp with a Yellow cover. Location: outside driver's door next to handrail.	1
1750-0072-593	12 VDC (or 24VDC) electrical outlet in the cab wired battery hot. Location: officer side dash.	2
1750-0075	English dominant main cab gauge cluster.	1
1750-0188	DPF regeneration override switch.	1
1750-0198-A31	Battery charger to be located behind driver's seat.	1
1750-0343	Battery charger E-ONE LPC 20. 120 volt inlet, 20 amp output.	1
5400-0037	Dome Lts Red/White Incandescent. Package includes two lights mounted in the front and two mounted in the rear of the cab. White light wire through door and light assembly mounted switch. Red light through light assembly mounted switch.	1
BODY MODEL		
3080-0064	Body aerial HP75 / HP78 SideStacker Quest / CII / Typhoon with pump. Single axle. Includes extended R1 compt and pocket style drop down step at left rear staircase. The rear access doors to match the rear body finish.	1
BODY COMPT REAR		
3110-0058	Rear of body to have flush un-painted smooth plate body panels to facilitate rear body striping.	1
AERIAL BODY OPTIONS		
3310-0017	Auxiliary jack pad 24X24 (PR) with side mounted handle. Includes mounting brackets.	1
3310-0050	Crosslay triple 5.5" wide single stack to hold up to 200' of 2.0" DJ (each) or 150'-200' 2.5" DJ (each). Includes storage pan to rear of crosslays	1
3310-0097	Hose bed depth 26" HP75 / HP78 SideStacker with tall R1. Will hold up to 800' of 5" LDH and up to 300-400' of 2.5 or 3" DJ. Capacity will be reduced with optional diamond plate covers.	1
3310-0128	Pike pole/Ladder storage. Available on HP75/78 SideStacker with tall R1 & HM100/110 SideStacker only. The access door to match the rear body finish.	1
DOORS		

3300-0017-004	Door roll up short (up to 45") with satin finish ROM. Location(s): L2.	1
3300-0017-005	Door roll up short (up to 45") with satin finish ROM. Location(s): L3.	1
3300-0019-003	Door roll up tall (greater than 45") with satin finish ROM. Location(s): L1.	1
3300-0019-006	Door roll up tall (greater than 45") with satin finish ROM. Location(s): L4.	1
3300-0019-015	Door roll up tall (greater than 45") with satin finish ROM. Location(s): R1.	1
3300-0164-016	Door double vertically hinged w/rotary latches - painted . Location(s): R2	1
COVERS		
3305-0007-000-02	Vinyl Red hose bed cover with attached rear flap(s).	1
3305-0008-000-02	Vinyl Red crosslay cover with attached side flaps.	1
PUMP MODULE		
3130-0080	Pump panel opening is 57" wide.	1
PUMP PANELS		
3134-0012	Officer side upper pump access panel to be horizontally hinged with diamond plate door. Includes (2) push button latches and (2) hold open devices.	1
3134-0016	Stainless steel driver and officer side pump panels.	1
3134-0064	The gauge panel(s) on the driver side of the Side Mount module to be hinged upward. Panel(s) to include (2) mechanical/pneumatic (as applicable to panel size) hold opens and latches.	1
MISC PUMP PANEL OPTIONS		
4460-0003	Pump panel tags color coded per NFPA compliance.	1
WATER TANK		
4010-0198	500 gallon "T" water tank. UPF Poly III blue fill tower.	1
TANK PLUMBING		
4450-0010	2" tank fill Akron manual valve.	1
4450-0022	3" tank to pump Akron manual valve.	1
LADDER STORAGE / RACKS		
3365-0167-C85	Dual ladder tunnel for HP75 / HP78 SideStacker with tall R1 compartment. Ladder rack to hold: PEL3-35, PEL-28 and PRL-16.	1
HANDRAILS / STEPS		
3330-0002-050	Slide-out platform, rollerless. Includes chrome grab handle centered on the front face of the platform (includes hand rail as applicable). Located below driver side pump panel.	1
3330-0100-M20	Step below body. Located below rear of officer side pump panel. Each location requires a minimum of (1) handrail / handhold per NFPA.	1
3330-0105-060	Dual lighted LED folding step. Location: officer side front compartment face. Each location requires a minimum of (1) handrail per NFPA.	3
3330-0105-062	Dual lighted LED folding step. Location: driver side front compartment face. Each	3

	location requires a minimum of (1) handrail per NFPA.	
MISC BODY OPTIONS		
3090-0001	Hose bed capacity aerial. Provide standard size hose bed.	1
3090-0002	The unit has no overall height restrictions.	1
3090-0004	The unit has no overall length restrictions.	1
3340-0015	Diamond plate single axle wheel well. Includes bolt-on composite wheel well liners and aluminum trim fenderettes.	1
3340-0093	Mud flaps, rear, black with E-ONE logo.	1
3340-0270	The painted aerial body side panels shall be smooth / flush. Applies to SideStacker HB side, panels next to water tank on MM, and upper body sides on RLP.	1
SCBA BOTTLE STORAGE		
3320-0020	SCBA Bottle Storage. (4) Fire Shopp SCBA bottle storage with hinged doors with push button latches. (2) officer side and (2) driver side in wheel well area.	1
PUMPS		
4005-0016	Hale QMAX 1000-2250 GPM single stage pump.	1
4005-0031	Rating 1500 GPM.	1
PUMP CERTIFICATION		
4475-0000	Pump certification 750-2250 GPM	1
PUMP OPTIONS		
4015-0007	Pump cooler, 1/4" valve with 3/8" tubing.	1
4015-0008	Zinc anodes for Hale pump (PR), (1) discharge side and (1) intake side.	1
4015-0022	Mechanical pump seal - Hale.	1
4015-0052-198	Steamers to be Flush. Location: driver's side.	1
4015-0052-199	Steamers to be Flush. Location: officer's side.	1
4015-0073	Manual operated master pump drain. The master drain shall be clearly marked and placed in accessible location rearward below running board on driver side or L1 compartment.	1
INTAKES		
4440-0005	2.5" Left Intake Akron Manual Valve.	1
INTAKE OPTIONS		
4445-0009	Intake relief valve, Akron.	1
DISCHARGES AND PRECONNECTS		
4415-0012-654	1.5" crosslay with Akron manual valve. Location: crosslay 1 & 2.	2
4415-0034-583	3" Right Pump Panel Discharge Akron Manual Valve (Waterous pumps noted location to be forward lower port). Location: right side discharge 1.	1
4415-0051	4" Waterway Discharge with 3" Akron Manual Valve.	1

4415-0058-655	2.5" Crosslay Akron Manual Valve. Location: crosslay 3.	1
4415-0161-581	2.5" Left Panel Discharge Akron Manual Valve w/30 Degree Droop. Location: left side discharge 1.	1
4415-0161-582	2.5" Left Panel Discharge Akron Manual Valve w/30 Degree Droop. Location: left side discharge 2.	1
4415-0164-584	2.5" Right Panel Discharge Akron Manual Valve w/30 Degree Droop. Location: right side discharge 2.	1
DISCHARGE OPTIONS		
4417-0058-359	Bleeder drain valve plumbed to: waterway discharge.	1
4417-0058-573	Bleeder drain valve plumbed to: crosslay preconnect.	3
4417-0058-575	Bleeder drain valve plumbed to: left discharge.	2
4417-0058-576	Bleeder drain valve plumbed to: right discharge.	2
PRESSURE GOVERNORS		
4465-0011	Class 1 TPG pressure governor. Includes, water, oil, volt and tachometer.	1
GAUGES		
4435-0001	Class 1 Intelli-Tank water tank level gauge.	1
4435-0013	4.5" Class 1 compound pressure gauge (30-0-600 PSI).	2
4435-0015-352	2.5" Class 1 compound pressure gauge (30-0-600). Discharge(s): 1.5 in. crosslay preconnect.	2
4435-0015-353	2.5" Class 1 compound pressure gauge (30-0-600). Discharge(s): 2.5 in. crosslay preconnect.	1
4435-0015-359	2.5" Class 1 compound pressure gauge (30-0-600). Discharge(s): waterway discharge.	1
4435-0015-581	2.5" Class 1 compound pressure gauge (30-0-600). Discharge(s): left side discharge 1.	1
4435-0015-582	2.5" Class 1 compound pressure gauge (30-0-600). Discharge(s): left side discharge 2.	1
4435-0015-583	2.5" Class 1 compound pressure gauge (30-0-600). Discharge(s): right side discharge 1.	1
4435-0015-584	2.5" Class 1 compound pressure gauge (30-0-600). Discharge(s): right side discharge 2.	1
ELECTRICAL SYSTEMS		
5010-0013-E91	Vehicle data recorder - 2009 NFPA compliant. Includes occupant detection with display. Display location: Driver side of center dash electrical cover.	1
5010-0039	V-MUX Electrical system for aerials.	1
5010-0059-339	VFD Text display for V-MUX electrical system. Location: center of dash.	1
LIGHT BARS		
5300-0084-034	Whelen Mini-Freedom LED light bars (PR) model FNMINI 24" with red/clear lenses and MKEZ7 mounts. Location: front cab corners.	1

WARNING LIGHT PACKAGES		
5550-0054-537	Whelen 600 series Super LED lower level warning light package. Includes (10) red LED light heads w/chrome flanges. Locate side facing lights: at forward most position, on side of cab down low just ahead of rear door, and on rear fixed outrigger cover.	1
WARNING LIGHTS		
5600-0078-268-06	Whelen Super LED beacon (PR) model L31H with Red domes. Location each side of pump module offset to the rear.	1
5600-0078-479-06	Whelen Super LED beacon (PR) model L31H with Red domes. Location rear upper body on aerial style brackets.	1
5600-0149-170	Hazard (door ajar) light, 2.5" incandescent. Location: center overhead.	1
SIRENS		
5500-0015	Whelen model 295SLSA1 siren with microphone (replaced 295HFSA1).	1
5500-0024-170	The electronic siren control is to be located on the center overhead.	1
SPEAKERS		
5510-0018-209	Whelen SA122FMP electronic siren speaker recessed in front bumper. Location: driver side front bumper.	1
DOT LIGHTING		
5150-0006	Whelen 600 series LED horizontal mount tail lights. Includes LED stop/tail, arrow turn and halogen back-up lights with horizontal Cast 3 housing and weatherproof connectors.	1
5150-0017	License plate light LED with chrome housing located at the rear of the body.	1
5150-0026	Marker light LED body/cab package. E-ONE custom cab with aerial ladder,	1
DOT LIGHTING		
	Mid-Mount platform or Bronto bodies only.	
LIGHTS - COMPARTMENT, STEP & GROUND		
5380-0029	Ground light package for cab and body - large.	1
5380-0033	Step light package body - small.	1
5380-0077	Compartment light package Amdor Luma-Bar LED for medium bodies. Includes one light per compartment (two if transverse).	1
LIGHTS - DECK AND SCENE		
5390-0003	Hose bed light Truck-Lite. Locate at the front area of the hose bed. Switched with work light switch in cab.	1
5390-0007	Deck/scene light circuit wiring through chassis reverse. Requires rear deck or scene light.	1
5390-0022	Crosslay light Truck-Lite. Locate to rear of crosslay (SM) and forward of crosslay (TM as applicable). Switched with work light switch in cab.	1
5390-0048-445	Whelen 600 series gradient Super LED scene lights (PR) with weatherproof	1

	connectors. Switch in cab (driver and officer side lights switched separately). Locate up high on rear access door.	
LIGHTS - NON-WARNING		
5400-0003	Engine compartment light (EA).	1
5400-0008	(1) pump panel light over the pump control area to be wired to come on when pump shift is placed in pump. (Side mount forward light noted, Top Mount is center light.)	1
5400-0010	Incandescent pump compartment light (EA).	1
5400-0039	Spotlight Specialty 2150 hand held located on officer's side of cab dash - hardwired.	1
5400-0047	Pump panel light package with (3) lights per side pump panel. Pump panels over 45" may require additional lights. Side mount only.	1
CONTROLS / SWITCHES		
5100-0000-199	Foot switch to control air horns located officer's side.	1
5100-0007-198	Foot switch to control electronic siren located driver's side.	1
CAMERAS / INTERCOM		
6570-0008	Intercom aerial 2-way. Atkinson Dynamics (Federal). Speaker to be located to rear of platform on Bronto units.	1
MISC ELECTRICAL		
1750-0082-762	12V power distribution module. Includes (6) battery hot and (6) switched hot circuits. 100 amps max (IATS). Location: behind officer's seat.	1
5110-0017	Back-up alarm 97 dB.	1
AERIAL MODEL		
6100-0028	Ladder HP78 750 lb tip load with waterway. Includes left side console with cover, split steps at tip and jack leg flood lights.	1
AERIAL HYDRAULIC SYSTEM OPTIONS		
6150-0003-216	Gauge aerial hydraulic oil level. Electronic display to be located on pump operator's panel.	1
MONITORS		
6300-0002	Monitor Akron electric 1000 GPM for ladder. Includes tip and base controls.	1
6300-0017	Monitor painted silver from OEM.	1
AERIAL WARNING LIGHTS		
6550-0001	Outrigger warning lights (PR) LED. Truck-Lite model 91R.	1
AERIAL LIGHTING		
6560-0002-231	Spot light 12V located left side tip.	1
6560-0002-232	Spot light 12V located right side tip.	1
6560-0005	Flood lights Unity at base (PR).	1

WATERWAY OPTIONS		
6350-0005	Rear 4" NST waterway inlet for rear mounted aerials. Includes chrome cap.	1
6350-0006	2.5" Waterway Class 1 pressure gauge 30-0-600. Locate next to waterway inlet.	1
6350-0010	Flowminder with single readout and totalizer for the aerial waterway to be located at the aerial control station.	1
AERIAL EQUIPMENT		
6500-0011-139	Pike pole tube for 6' pole on ladder. Location: right side fly section.	1
AERIAL LADDER BRACKETS		
6600-0002-250	Roof ladder bracket J style mount. Locate outside base section for a PRL-16 on left side of base section. Available on HP75/78, HP100, and HP95.	1
SIGN PLATES		
6750-0004-000-39	Aerial sign plates 12 x 144 (PR). Available on HP78, HP100 and HP100 platform only. Does not include lettering. Color: Job Color.	1
AERIAL TESTING		
6900-0000	Aerial flow test - 3rd party.	1
6900-0002	Aerial 2009 NFPA Certification.	1
HAND TOOLS		
7600-0005	Pike Pole Fiberglass 6'.	2
7600-0006	Pike Pole Fiberglass 8'.	2
7600-0008	Pike Pole Fiberglass 12'	2
GROUND LADDERS		
7800-0010	Alco-Lite PRL-16' roof ladder.	2
7800-0021	Alco-Lite PEL-28' extension ladder.	1
7800-0023	Alco-Lite PEL3-35' 3-section extension ladder.	1
7800-0032	Alco-Lite FL-10, 10' folding ladder w/safety shoes.	1
MISC LOOSE EQUIPMENT		
7600-0016	Wheel chocks 44" NFPA complaint, pair (PR) of Zico SAC-44. Up to 44" diameter tires. Includes mounting brackets.	4
7900-0014	DOT Required Drive Away Kit - Kit includes three (3) triangular warning reflectors with carrying case. This kit is for the end user and is to remain with the truck.	1
EXTERIOR PAINT		
8100-0089	All applicable pump/pre-connect application modules are to have a sanded finish (not painted job color). Includes upper and lower pump modules, crosswalk module and/or speedlay/pre-connect module (as applicable). Rear mounted body/pump module to be painted job color.	1
8100-0116	Rear body surface to have a sanded finish (not painted job color). Includes hinged doors that do not have discrete sales codes and removable panels.	1

8100-0176-000-17	Paint E-ONE chassis cab - Sikkens paint. Color: FLNA3225E-1 Red.	1	
8100-0183-000-17	Paint Body - Large - For Aerials, T/A Tankers/Wetsides, Rear Mounts and Rescues. Sikkens paint. Color: FLNA3225E-1 Red.	1	
8100-0356	Paint lift cylinders, extension cylinders and upper turntable steelwork FLNA4006 white (does not apply to TT deck).	1	
INTERIOR PAINT			
8150-0011	The interior of the cab to be painted Zolatone gray.	1	
STRIPING			
8200-0015	White reflective tape on (2) outriggers.	1	
8300-0002-334-12	NFPA Scotchlite Stripe - 4" wide and straight on front/sides of cab and sides/rear of body. Color: White. Location: bottom of stripe flush with top of bumper and straight back.	1	
8300-0042	White rubrail scotchlite insert.	1	
8300-0084-000-72	Chevron "A" style 6" printed sheet Scotchlite striping on rear of body. Includes rear facing extrusions, panels and doors inboard/outboard of the beavertails (if applicable). Colors to be Yellow/Red.	1	
GRAPHICS			
8400-0022	Logo E-ONE (PR) on aerial lift cylinder. Logo to be black and white reflective material approx 14" long located midway along outward surface of cylinder.	1	
WARRANTY / STANDARD & EXTENDED			
9100-0000	Standard 1 Year Warranty.	1	
9100-0003	Lifetime Frame Warranty.	1	
9100-0004	10 Year/100,000 Mile Structural Warranty - Statement of Warranty.	1	
9100-0005	10 Year Stainless Steel Plumbing Warranty - Statement of Warranty.	1	
9100-0007	20 Year Aerial Device Structural Warranty - Integrity Limited Warranty.	1	
9100-0019	10 Year Limited Paint and Perforation Warranty - For Sikkens Paint.	1	
SUPPORT, DELIVERY, INSPECTIONS AND MANUALS			
9300-0000	Vehicle familiarization aerial (Domestic).	1	
9300-0016	Approval Drawings-Standard.	1	
9300-0038	Manuals, operator, service and exploded view parts CD-ROM.	1	
PRICE	2013 E-ONE HP78 AERIAL QUINT, TYPHOON CUSTOM CHASSIS		$585,204.

STATE OF OHIO TERM SCHEDULE

4200 SURFACE RD
COLUMBUS, OH 43228

Quote No: 57491

3/11/2013

Quote Rev:13 Drawing Rev:3

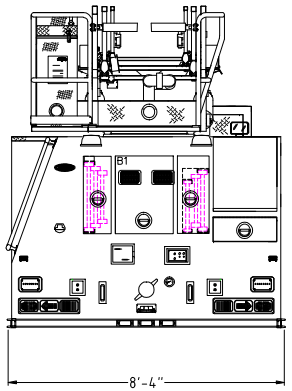

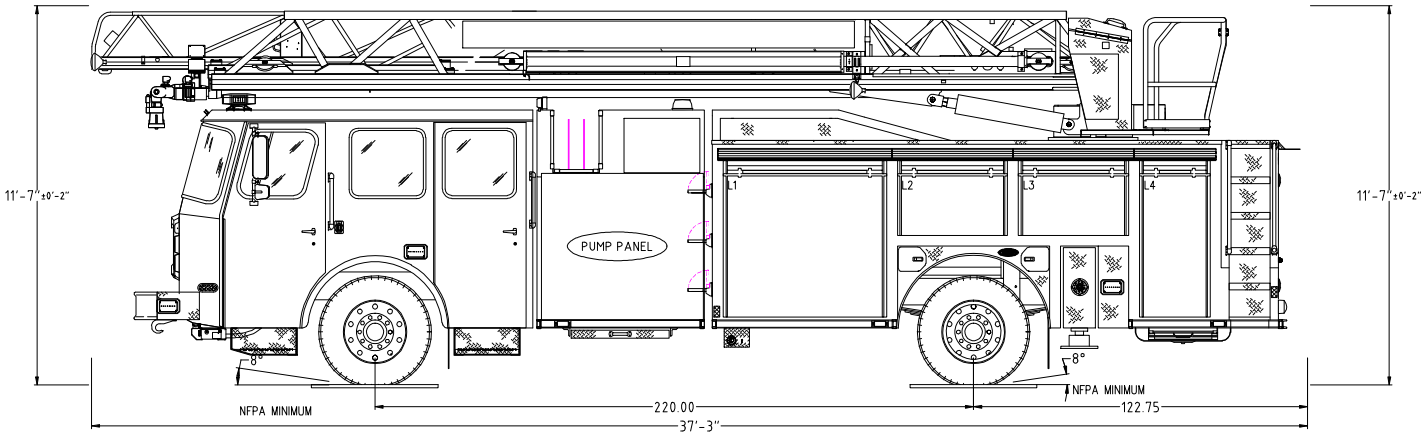

POWERED BY EZDRAW

Notice: This drawing provides a GENERAL REPRESENTATION of the vehicle configuration and should be used for evaluation purposes. The respective dimensions shown,including overall height and length, are estimates and may vary due to manufacturing processes. All other items such as lighting and fixtures, plumbing, compartmentation, and other generally assembled details are shown for REFERENCE ONLY and may not be a direct reflection of the final truck configuration. In ALL situations where this drawing may conflict with the specifications, THE SPECIFICATIONS, AS REFLECTED IN THE APPROVED SHOP ORDER, SHALL PREVAIL. Unless otherwise specified, the proposed apparatus will be manufactured to the latest NFPA recommendations as well as other applicable federally regulated safety regulations. E-One reserves the right to engineer and incorporate design improvements and changes without notice, while adhering to the intent of the specification.

	HOSE LOADS :
1500 GPM HALE QMAXPUMP 0 TOTAL VOLUME 0 TOTAL FOAM	

	OPENING		INTERIOR DIMENSIONS				
COMPT.	WIDTH	HEIGHT	WIDTH	LOWER HEIGHT	LOWER DEPTH	UPPER HEIGHT	UPPER DEPTH
L1	58	53	60	61	26	53	24
L2	38.5	23	40.5	N/A	N/A	23	24
L3	38.5	23	40.5	N/A	N/A	23	24
L4	24	53	26	61	26	53	24
R1	58	53	60	61	26	53	23
R2	47	26	47	30	26	N/A	N/A

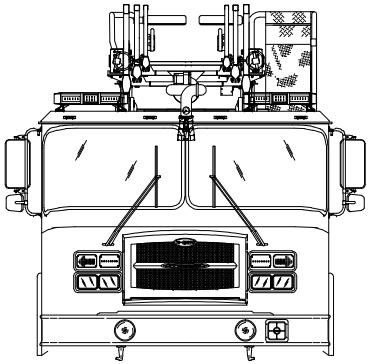

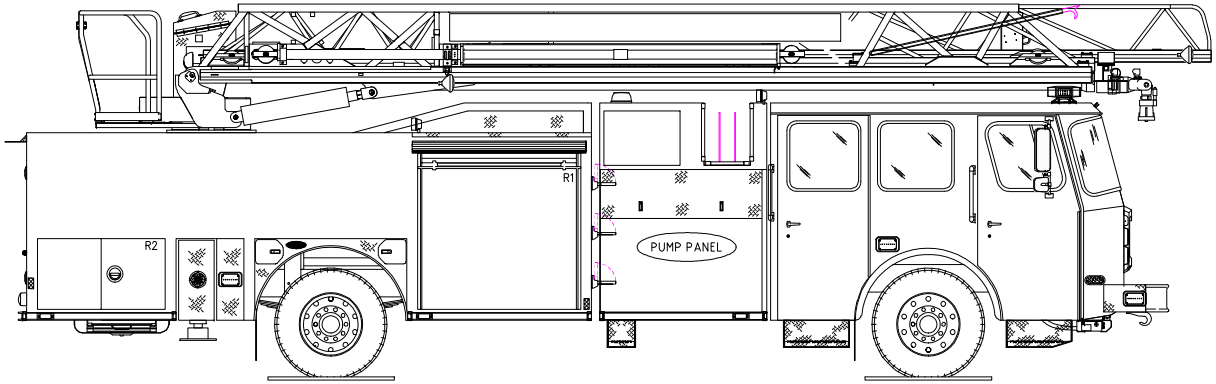

POWERED BY EZDRAW

Fire Apparatus Quotation for:
STATE OF OHIO TERM SCHEDULE

Quotation Number: 57492 Rev: 10

Unit Description: AERM-CYC2-100L

Quote Description: Aerial Rear Mount, Cyclone II, 100 Foot Ladder

Salescode	Extended Description	Qty
TESTING COMPLIANCE STANDARD		
1001-0015	The E-ONE supplied components of the vehicle shall meet the requirements of NFPA 1901, 2009 edition.	1
BUMPERS		
1160-0000	Bumper 10" stainless steel.	1
1160-0010	1/8" Front Bumper Gravel Shield.	1
1160-0013	16" Front Bumper Gravel Shield Extension.	1
FRAME ASSEMBLY		
1250-0005	Frame - Torque box for tandem axle RM aerial.	1
AXLE OPTIONS		
1025-0012	Meritor FL-943 front axle 21,000 lb.	1
1025-0021	Meritor RT-46-160 rear tandem axle 48,000 lb. capacity.	1
1025-0028	Koni shock absorbers for front axle - adjustable.	1
SUSPENSIONS		
1070-0002	Rear suspension springs rated equal to the capacity of the axles.	1
WHEEL OPTIONS		
1050-0007	Front axle wheel trim kit. Includes stainless steel lug nut covers (chrome plated plastic if applicable) and center cap with E-ONE logo. Note: Center cap will have an inspection port IPO a logo if equipped with Stemco oil seals.	1
1050-0009	Rear axle (tandem) wheel trim kit. Includes stainless steel lug nut covers (chrome plated plastic if applicable) and center caps with E-ONE logo. E-ONE custom chassis w/steel wheels will have chrome plated plastic lug covers.	1
1050-0044	Accuride aluminum wheels for front axle (2).	1
1050-0046	Accuride aluminum wheels for rear axles (8).	1
TIRE OPTIONS		

1060-0022	Eight Michelin 12R rear tires with XDN2 mud and snow tread.	1
1060-0046	Two Michelin 425 tires model XFE for front axle.	1
1060-0050	Tire pressure monitoring valve stem caps.	1
BRAKE SYSTEMS		
1100-0001	Meritor EX225H 17" disc brakes for front axle.	1
1100-0006	Parking brake release mounted on the driver's side lower dash.	1
1100-0008	Brake system air 6X4.	1
1100-0014	ArvinMeritor 16-1/2" x 7" S-cam brakes with cast brake drums for a tandem rear axle.	1
AIR SYSTEM OPTIONS		
1110-0000-001	Inlet for air system. Location: driver door jamb.	1
1110-0002	Air dryer Bendix AD-9.	1
1110-0006	Air lines nylon.	1
1110-0026	Air horns recessed in bumper (PR).	1
1110-0027	Isolated air tank. Includes pressure protection valve.	1
1110-0043	Auxiliary air tank to be plumbed to the following optional accessories (if equipped): Chassis air horns, brake system air outlet, air reel, light tower and or customer/dealer supplied pneumatic add-on(s).	1
ENGINES & TRANSMISSIONS		
1200-0017	Push-button transmission shift selector.	1
1200-0021	TransSynd synthetic transmission fluid for EVS 4000.	1
1200-0096	Electronically limited speed to 60 MPH.	1
1200-0238	Eng/Trans Cummins ISX12 450HP with EVS4000 transmission. 2013 EPA Compliant.	1
SECONDARY BRAKING		
1125-0002	Jacobs engine compression brake.	1
COOLING PACKAGE		
1800-0013	Cooling system for use with Cyclone II X, Typhoon X, and Quest chassis. For use with 2010/2013 EPA engines. Includes coolant recovery system.	1
FUEL SYSTEMS		
1350-0003	Fuel system 50 gallon.	1
1350-0011	Fuel pump electric w/re-prime.	1
1350-0022	Fuel line hose rubber.	1
ALTERNATOR		
1700-0005	Alternator Leece Neville 320 amp. 320 amp SAE/275 amp NFPA.	1
BATTERIES		
1400-0002	Battery four group 31 1000 CCA.	1

CHASSIS OPTIONS		
1680-0005	Thermatic fan clutch.	1
1680-0007	Drivelines 1810. Required on 1550 lb/ft torque engines.	1
1680-0008	Tow eyes front painted below bumper/cab (PR).	1
1680-0012	Tow eyes rear frame painted.	1
1680-0051	Aerial hydraulic activation system.	1
1680-0250-M58	Diesel Exhaust Fluid (DEF) 5 gallon tank for 2013 EPA engines. Location: left side below rear of cab.	1
CAB MODEL		
1520-0008	Cyclone II X medium cab with 58" CA	1
CAB ROOF TYPE		
1615-0004	Cab roof to be "flat" with trough for waterway. Required with HM100 (with waterway), HP100 (all), CR100/92 Pltfm (SdStckr and W/O/P) or HP100 Pltfrm (all).	1
CAB BADGE PACKAGE		
1610-0000	Cab and body to have applicable E-ONE logos.	1
CAB DOOR OPTIONS		
1550-0003	Rear crew cab doors in the medium position.	1
1550-0005	Driver and officer cab door windows. Include forward vent windows.	1
1550-0011	Rear crew cab door windows. Includes manual roll-down actuation. Not available with paddle style door latching.	1
1550-0016	Cab door panels ABS.	1
1550-0025	All cab doors shall have "L" style exterior latches.	1
1550-0027	Front cab door windows to manually roll down.	1
1550-0037-659	(4) Incandescent cab step area lighting. Locate each light in on each cab door in the inboard position. Lights to be switched with door ajar.	1
1550-0044	All cab door kick plates to be made from diamond plate aluminum.	1
1550-0059-000-72	Reflective Yellow/Red printed striping positioned in the "A" formation located in the lower cab door panels.	1
1550-0077	Interior cab door locks - manual. Will be individually actuated from each respective door. Includes barrel style key lock on each exterior cab door.	1
1550-0084	All cab exterior access doors to have 1250 keyed locks.	1
MIRRORS		
1670-0003	Velvac 2010 mirrors. Door mounted west coast style with remote control and heat.	1
MISC EXTERIOR CAB OPTIONS		
1550-0020	Windows cab side fixed driver's side.	1
1550-0033	Windows cab side fixed officer's side.	1
1675-0022	Pair of 18" handrails located just behind driver and officer front door one each side.	1

1675-0023	Pair of 18" handrails located just behind driver and officer rear door (ALS doors if equipped) one each side.	1
1675-0030	Mud flaps, front, black with E-ONE logo.	1
1675-0047	Rear cab wall to be 3/16" aluminum diamond plate.	1
HVAC		
1515-0018	Air conditioning for the CII X and Quest with Cummins ISM, ISX or Detroit Diesel Series 60 engine, roof top mounted condenser.	1
1685-0057	Heaters rear with covers (PR), and front heater with heat to the feet for the driver and officer.	1
SEATS		
1510-0003	Seats, Inc. brand 911 cab seats.	1
1510-0007	Seat cover material vinyl.	1
1510-0008	Seat color gray.	1
1510-0035-147	Universal air pack bottle bracket (EA). Location: officer's seat.	1
1510-0035-148	Universal air pack bottle bracket (EA). Location: rear facing driver's side.	1
1510-0035-151	Universal air pack bottle bracket (EA). Location: inboard driver's side rear wall.	1
1510-0035-152	Universal air pack bottle bracket (EA). Location: inboard officer's side rear wall.	1
1510-0035-215	Universal air pack bottle bracket (EA). Location: rear facing officer's side.	1
1510-0038	Driver seat 911 air ride.	1
1510-0042	Officer seat to be 911 fixed SCBA.	1
1510-0050	Rear facing 911 seat with SCBA driver's side.	1
1510-0053	Rear facing 911 seat with SCBA officer's side.	1
1510-0062	Two man bench centered on rear wall with 911 SCBA backs.	1
1685-0033	Seating capacity tag of six occupants.	1
MISC INTERIOR CAB OPTIONS		
1685-0000	Cab interior gray. Does not include engine cover or seat color.	1
1685-0005	Lexan sun visors, driver and officer's side overhead.	1
1685-0168	ABS Dash package. Includes center and officer side dash, lower kick panels and "A" post covers.	1
1685-0187	Severe duty engine cover, molded polyurethane.	1
CAB ELECTRICAL OPTIONS		
1750-0013-172	Turn signal Whelen 600 LED amber arrow pair located upper headlight bezel.	1
1750-0029	Switch horn button two position DOT/air horn.	1
1750-0046-195	Cab Headlights. Position: lower.	1
1750-0059-179-04	Receptacle inlet 20 amp with a Yellow cover. Location: outside driver's door next to handrail.	1
1750-0072-593	12 VDC (or 24VDC) electrical outlet in the cab wired battery hot. Location: officer side dash.	2

1750-0075	English dominant main cab gauge cluster.	1
1750-0188	DPF regeneration override switch.	1
1750-0198-A31	Battery charger to be located behind driver's seat.	1
1750-0343	Battery charger E-ONE LPC 20. 120 volt inlet, 20 amp output.	1
5400-0037	Dome Lts Red/White Incandescent. Package includes two lights mounted in the front and two mounted in the rear of the cab. White light wire through door and light assembly mounted switch. Red light through light assembly mounted switch.	1
BODY SPEC		
3090-0000	Body Specs - SideStacker aerial with tandem axle. Includes left rear staircase with pocket style drop down step.	1
BODY COMPT REAR		
3110-0058	Rear of body to have flush un-painted smooth plate body panels to facilitate rear body striping.	1
AERIAL BODY OPTIONS		
3310-0001	Compartments driver side tandem axle HP SideStacker. Includes rescue style extended height compartments.	1
3310-0008	Compartments officer side tandem axle HP SideStacker. Includes rescue style extended height compartments ahead of wheel well with extended hosebed.	1
3310-0032	Recessed tubes for (6) pike poles. Not available on HP75 SideStacker.	1
3310-0036	Rollup rear ladder compartment door with satin finish for SideStacker aerial. Includes hinged ladder retention plate.	1
3310-0049	Auxiliary jack pad 24X24 (4) with side mounted handles. Includes welded mounting brackets.	1
3310-0050	Crosslay triple 5.5" wide single stack to hold up to 200' of 2.0" DJ (each) or 150'-200' 2.5" DJ (each). Includes storage pan to rear of crosslays	1
3310-0162	Jack leg opening covers diamond plate (4) sets. Includes diamond plate outrigger covers and fixed diamond plate filler panels. HM100/110 requires surface mount warning lights.	1
DOORS		
3300-0007-017	Door single vertically hinged painted. Location(s): R3	1
3300-0011-005	Door single horizontally hinged lift-up painted. Location(s): L3	1
3300-0011-006	Door single horizontally hinged lift-up painted. Location(s): L4	1
3300-0019-003	Door roll up tall (greater than 45") with satin finish ROM. Location(s): L1.	1
3300-0019-004	Door roll up tall (greater than 45") with satin finish ROM. Location(s): L2.	1
3300-0019-007	Door roll up tall (greater than 45") with satin finish ROM. Location(s): L5.	1
3300-0019-008	Door roll up tall (greater than 45") with satin finish ROM. Location(s): L6.	1
3300-0019-015	Door roll up tall (greater than 45") with satin finish ROM. Location(s): R1.	1
3300-0019-016	Door roll up tall (greater than 45") with satin finish ROM. Location(s): R2.	1
3300-0164-018	Door double vertically hinged w/rotary latches - painted . Location(s): R4	1

COVERS			
3305-0007-000-02	Vinyl Red hose bed cover with attached rear flap(s).	1	
3305-0008-000-02	Vinyl Red crosslay cover with attached side flaps.	1	
PUMP PANELS			
3134-0016	Stainless steel driver and officer side pump panels.	1	
3134-0064	The gauge panel(s) on the driver side of the Side Mount module to be hinged upward. Panel(s) to include (2) mechanical/pneumatic (as applicable to panel size) hold opens and latches.	1	
3134-0100	Officer side upper pump access panel to be horizontally hinged with diamond plate door. Includes (2) push button latches and (1) hold open device.	1	
MISC PUMP PANEL OPTIONS			
4460-0003	Pump panel tags color coded per NFPA compliance.	1	
WATER TANK			
4010-0198	500 gallon "T" water tank. UPF Poly III blue fill tower.	1	
TANK PLUMBING			
4450-0010	2" tank fill Akron manual valve.	1	
4450-0022	3" tank to pump Akron manual valve.	1	
LADDER STORAGE / RACKS			
3365-0037-614	Center mounted ladder tunnel. Ladder rack to hold: PEL3-35, PEL-24, PRL-16, PRL-14, AEL-12 and FL-10. Requires roof ladder option on base section of aerial to meet 115' NFPA requirement..	1	
HANDRAILS / STEPS			
3330-0002-050	Slide-out platform, rollerless. Includes chrome grab handle centered on the front face of the platform (includes hand rail as applicable). Located below driver side pump panel.	1	
3330-0105-060	Dual lighted LED folding step. Location: officer side front compartment face. Each location requires a minimum of (1) handrail per NFPA.	3	
3330-0105-062	Dual lighted LED folding step. Location: driver side front compartment face. Each location requires a minimum of (1) handrail per NFPA.	3	
MISC BODY OPTIONS			
3090-0002	The unit has no overall height restrictions.	1	
3090-0004	The unit has no overall length restrictions.	1	
3090-0006	The hose bed is to have the capacity for the following hose (unless otherwise specified on the approval drawing). Hose load shall be listed from driver to officer.	1	Lay 1 - 1000 ft. of 5.00 LDH
3340-0093	Mud flaps, rear, black with E-ONE logo.	1	
3340-0107	Diamond plate tandem axle wheel well. Includes bolt-on composite wheel well liners and fenderettes.	1	
3340-0270	The painted aerial body side panels shall be smooth / flush. Applies to SideStacker	1	

	HB side, panels next to water tank on MM, and upper body sides on RLP.	
SCBA BOTTLE STORAGE		
3320-0009	SCBA Bottle Storage. (8) Cast Product SCBA bottle storage with gasketed doors. (4) each side in rear wheel well area.	1
PUMPS		
4005-0016	Hale QMAX 1000-2250 GPM single stage pump.	1
4005-0031	Rating 1500 GPM.	1
PUMP CERTIFICATION		
4475-0000	Pump certification 750-2250 GPM	1
PUMP OPTIONS		
4015-0007	Pump cooler, 1/4" valve with 3/8" tubing.	1
4015-0008	Zinc anodes for Hale pump (PR), (1) discharge side and (1) intake side.	1
4015-0022	Mechanical pump seal - Hale.	1
4015-0052-198	Steamers to be Flush. Location: driver's side.	1
4015-0052-199	Steamers to be Flush. Location: officer's side.	1
4015-0073	Manual operated master pump drain. The master drain shall be clearly marked and placed in accessible location rearward below running board on driver side or L1 compartment.	1
INTAKES		
4440-0005	2.5" Left Intake Akron Manual Valve.	1
INTAKE OPTIONS		
4445-0009	Intake relief valve, Akron.	1
DISCHARGES AND PRECONNECTS		
4415-0012-654	1.5" crosslay with Akron manual valve. Location: crosslay 1 & 2.	2
4415-0034-583	3" Right Pump Panel Discharge Akron Manual Valve (Waterous pumps noted location to be forward lower port). Location: right side discharge 1.	1
4415-0051	4" Waterway Discharge with 3" Akron Manual Valve.	1
4415-0058-655	2.5" Crosslay Akron Manual Valve. Location: crosslay 3.	1
4415-0161-581	2.5" Left Panel Discharge Akron Manual Valve w/30 Degree Droop. Location: left side discharge 1.	1
4415-0161-582	2.5" Left Panel Discharge Akron Manual Valve w/30 Degree Droop. Location: left side discharge 2.	1
4415-0164-584	2.5" Right Panel Discharge Akron Manual Valve w/30 Degree Droop. Location: right side discharge 2.	1
DISCHARGE OPTIONS		
4417-0089-359	Lift lever quarter turn bleeder valve. Plumbed for use with: waterway discharge.	1
4417-0089-573	Lift lever quarter turn bleeder valve. Plumbed for use with: crosslay preconnect.	3

4417-0089-575	Lift lever quarter turn bleeder valve. Plumbed for use with: left discharge.	2
4417-0089-576	Lift lever quarter turn bleeder valve. Plumbed for use with: right discharge.	2
PRESSURE GOVERNORS		
4465-0011	Class 1 TPG pressure governor. Includes, water, oil, volt and tachometer.	1
GAUGES		
4435-0001	Class 1 Intelli-Tank water tank level gauge.	1
4435-0013	4.5" Class 1 compound pressure gauge (30-0-600 PSI).	2
4435-0015-352	2.5" Class 1 compound pressure gauge (30-0-600). Discharge(s): 1.5 in. crosslay preconnect.	2
4435-0015-353	2.5" Class 1 compound pressure gauge (30-0-600). Discharge(s): 2.5 in. crosslay preconnect.	1
4435-0015-359	2.5" Class 1 compound pressure gauge (30-0-600). Discharge(s): waterway discharge.	1
4435-0015-581	2.5" Class 1 compound pressure gauge (30-0-600). Discharge(s): left side discharge 1.	1
4435-0015-582	2.5" Class 1 compound pressure gauge (30-0-600). Discharge(s): left side discharge 2.	1
4435-0015-583	2.5" Class 1 compound pressure gauge (30-0-600). Discharge(s): right side discharge 1.	1
4435-0015-584	2.5" Class 1 compound pressure gauge (30-0-600). Discharge(s): right side discharge 2.	1
ELECTRICAL SYSTEMS		
5010-0013-E91	Vehicle data recorder - 2009 NFPA compliant. Includes occupant detection with display. Display location: Driver side of center dash electrical cover.	1
5010-0039	V-MUX Electrical system for aerials.	1
5010-0059-339	VFD Text display for V-MUX electrical system. Location: center of dash.	1
LIGHT BARS		
5300-0084-034	Whelen Mini-Freedom LED light bars (PR) model FNMINI 24" with red/clear lenses and MKEZ7 mounts. Location: front cab corners.	1
WARNING LIGHT PACKAGES		
5550-0059-538	Whelen Super LED lower level warning light package. Includes (8) red 600 LED light heads and (2) red 500 LED light heads w/chrome flanges. Locate side facing lights: at forward most position, in rear wheel well offset to front, and side facing at rear of body in rubrail if equipped.	1
WARNING LIGHTS		
5600-0078-290-06	Whelen Super LED beacon (PR) model L31H with Red domes. Location above L2/R2 compartments offset rearward to supplement upper rear warnings.	1
5600-0078-479-06	Whelen Super LED beacon (PR) model L31H with Red domes. Location rear upper body on aerial style brackets.	1
5600-0149-170	Hazard (door ajar) light, 2.5" incandescent. Location: center overhead.	1

SIRENS		
5500-0015	Whelen model 295SLSA1 siren with microphone (replaced 295HFSA1).	1
5500-0024-170	The electronic siren control is to be located on the center overhead.	1
SPEAKERS		
5510-0018-209	Whelen SA122FMP electronic siren speaker recessed in front bumper. Location: driver side front bumper.	1
DOT LIGHTING		
5150-0006	Whelen 600 series LED horizontal mount tail lights. Includes LED stop/tail, arrow turn and halogen back-up lights with horizontal Cast 3 housing and weatherproof connectors.	1
5150-0017	License plate light LED with chrome housing located at the rear of the body.	1
5150-0026	Marker light LED body/cab package. E-ONE custom cab with aerial ladder, Mid-Mount platform or Bronto bodies only.	1
5150-0080-462	Weldon auxiliary turn signal model 9186-8580 LED (PR). Location: (1) each side in center of rear tandem wheel well.	1
LIGHTS - COMPARTMENT, STEP & GROUND		
5380-0029	Ground light package for cab and body - large.	1
5380-0033	Step light package body - small.	1
5380-0136	Compartment light package Amdor Luma-Bar LED for large bodies. Includes one light per compartment (two if transverse).	1
LIGHTS - DECK AND SCENE		
5390-0003	Hose bed light Truck-Lite. Locate at the front area of the hose bed. Switched with work light switch in cab.	1
5390-0007	Deck/scene light circuit wiring through chassis reverse. Requires rear deck or scene light.	1
5390-0022	Crosslay light Truck-Lite. Locate to rear of crosslay (SM) and forward of crosslay (TM as applicable). Switched with work light switch in cab.	1
5390-0048-446	Whelen 600 series gradient Super LED scene lights (PR) with weatherproof connectors. Switch in cab (driver and officer side lights switched separately). Locate (1) each side at rear below pike pole compts.	1
LIGHTS - NON-WARNING		
5400-0003	Engine compartment light (EA).	1
5400-0008	(1) pump panel light over the pump control area to be wired to come on when pump shift is placed in pump. (Side mount forward light noted, Top Mount is center light.)	1
5400-0010	Incandescent pump compartment light (EA).	1
5400-0039	Spotlight Specialty 2150 hand held located on officer's side of cab dash - hardwired.	1
5400-0047	Pump panel light package with (3) lights per side pump panel. Pump panels over 45" may require additional lights. Side mount only.	1

CONTROLS / SWITCHES		
5100-0000-199	Foot switch to control air horns located officer's side.	1
5100-0007-198	Foot switch to control electronic siren located driver's side.	1
CAMERAS / INTERCOM		
6570-0008	Intercom aerial 2-way. Atkinson Dynamics (Federal). Speaker to be located to rear of platform on Bronto units.	1
MISC ELECTRICAL		
1750-0082-762	12V power distribution module. Includes (6) battery hot and (6) switched hot circuits. 100 amps max (IATS). Location: behind officer's seat.	1
5110-0017	Back-up alarm 97 dB.	1
AERIAL MODEL		
6100-0009	Ladder HP100 SideStacker. Includes pinned waterway, left side console with cover, turntable mansaver bars, split steps at tip and jack leg flood lights.	1
AERIAL HYDRAULIC SYSTEM OPTIONS		
6150-0003-216	Gauge aerial hydraulic oil level. Electronic display to be located on pump operator's panel.	1
MONITORS		
6300-0002	Monitor Akron electric 1000 GPM for ladder. Includes tip and base controls.	1
6300-0017	Monitor painted silver from OEM.	1
AERIAL WARNING LIGHTS		
6550-0002	Outrigger warning lights (4) LED. Truck-Lite model 91R.	1
AERIAL LIGHTING		
6560-0002-231	Spot light 12V located left side tip.	1
6560-0002-232	Spot light 12V located right side tip.	1
6560-0005	Flood lights Unity at base (PR).	1
WATERWAY OPTIONS		
6350-0005	Rear 4" NST waterway inlet for rear mounted aerials. Includes chrome cap.	1
6350-0006	2.5" Waterway Class 1 pressure gauge 30-0-600. Locate next to waterway inlet.	1
6350-0010	Flowminder with single readout and totalizer for the aerial waterway to be located at the aerial control station.	1
SIGN PLATES		
6750-0000-000-39	Aerial sign plates 10 x 144 (PR). Available on Booms, HP75 and HP100 only. Does not include lettering. Color: Job Color.	1
AERIAL TESTING		
6900-0000	Aerial flow test - 3rd party.	1
6900-0002	Aerial 2009 NFPA Certification.	1

HAND TOOLS		
7600-0005	Pike Pole Fiberglass 6'.	2
7600-0006	Pike Pole Fiberglass 8'.	2
7600-0008	Pike Pole Fiberglass 12'	2
GROUND LADDERS		
7800-0007	Alco-Lite PRL-14' roof ladder.	1
7800-0010	Alco-Lite PRL-16' roof ladder.	1
7800-0013	Alco-Lite AEL-12 Attic Extension Ladder	1
7800-0016	Alco-Lite PEL-24' 2-section extension ladder.	1
7800-0023	Alco-Lite PEL3-35' 3-section extension ladder.	1
7800-0032	Alco-Lite FL-10, 10' folding ladder w/safety shoes.	1
MISC LOOSE EQUIPMENT		
7600-0016	Wheel chocks 44" NFPA complaint, pair (PR) of Zico SAC-44. Up to 44" diameter tires. Includes mounting brackets.	4
7900-0014	DOT Required Drive Away Kit - Kit includes three (3) triangular warning reflectors with carrying case. This kit is for the end user and is to remain with the truck.	1
EXTERIOR PAINT		
8100-0084	All applicable pump/pre-connect application modules are to have a job color finish. Includes upper and lower pump modules, crosswalk module and/or speedlay/pre-connect module (as applicable). Rear mounted body/pump module to be painted job color.	1
8100-0116	Rear body surface to have a sanded finish (not painted job color). Includes hinged doors that do not have discrete sales codes and removable panels.	1
8100-0176-000-17	Paint E-ONE chassis cab - Sikkens paint. Color: FLNA3225E-1 Red.	1
8100-0183-000-17	Paint Body - Large - For Aerials, T/A Tankers/Wetsides, Rear Mounts and Rescues. Sikkens paint. Color: FLNA3225E-1 Red.	1
8100-0356	Paint lift cylinders, extension cylinders and upper turntable steelwork FLNA4006 white (does not apply to TT deck).	1
INTERIOR PAINT		
8150-0011	The interior of the cab to be painted Zolatone gray.	1
STRIPING		
8200-0016	White reflective tape on (4) outriggers.	1
8300-0002-334-12	NFPA Scotchlite Stripe - 4" wide and straight on front/sides of cab and sides/rear of body. Color: White. Location: bottom of stripe flush with top of bumper and straight back.	1
8300-0042	White rubrail scotchlite insert.	1
8300-0084-000-72	Chevron "A" style 6" printed sheet Scotchlite striping on rear of body. Includes rear facing extrusions, panels and doors inboard/outboard of the beavertails (if applicable). Colors to be Yellow/Red.	1

GRAPHICS			
8400-0022	Logo E-ONE (PR) on aerial lift cylinder. Logo to be black and white reflective material approx 14" long located midway along outward surface of cylinder.	1	
WARRANTY / STANDARD & EXTENDED			
9100-0000	Standard 1 Year Warranty.	1	
9100-0003	Lifetime Frame Warranty.	1	
9100-0004	10 Year/100,000 Mile Structural Warranty - Statement of Warranty.	1	
9100-0005	10 Year Stainless Steel Plumbing Warranty - Statement of Warranty.	1	
9100-0007	20 Year Aerial Device Structural Warranty - Integrity Limited Warranty.	1	
9100-0019	10 Year Limited Paint and Perforation Warranty - For Sikkens Paint.	1	
SUPPORT, DELIVERY, INSPECTIONS AND MANUALS			
9300-0000	Vehicle familiarization aerial (Domestic).	1	
9300-0009	Manuals, Operator and Service CD-ROM.	1	
9300-0016	Approval Drawings-Standard.	1	
PRICE	2013 E-ONE HP100L AERIAL LADDER QUINT - CYCLONE CUSTOM CHASSIS		$788,347.

STATE OF OHIO TERM SCHEDULE

4200 SURFACE RD
COLUMBUS, OH 43228

Quote No: 57492

3/8/2013

Quote Rev:10 Drawing Rev:3

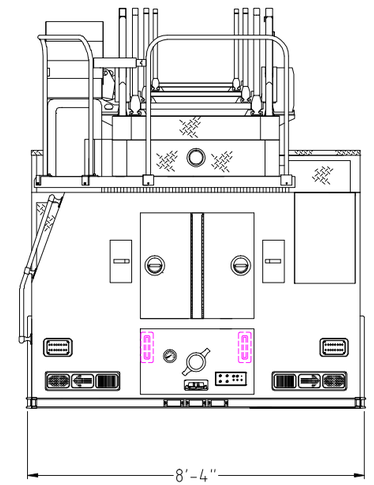

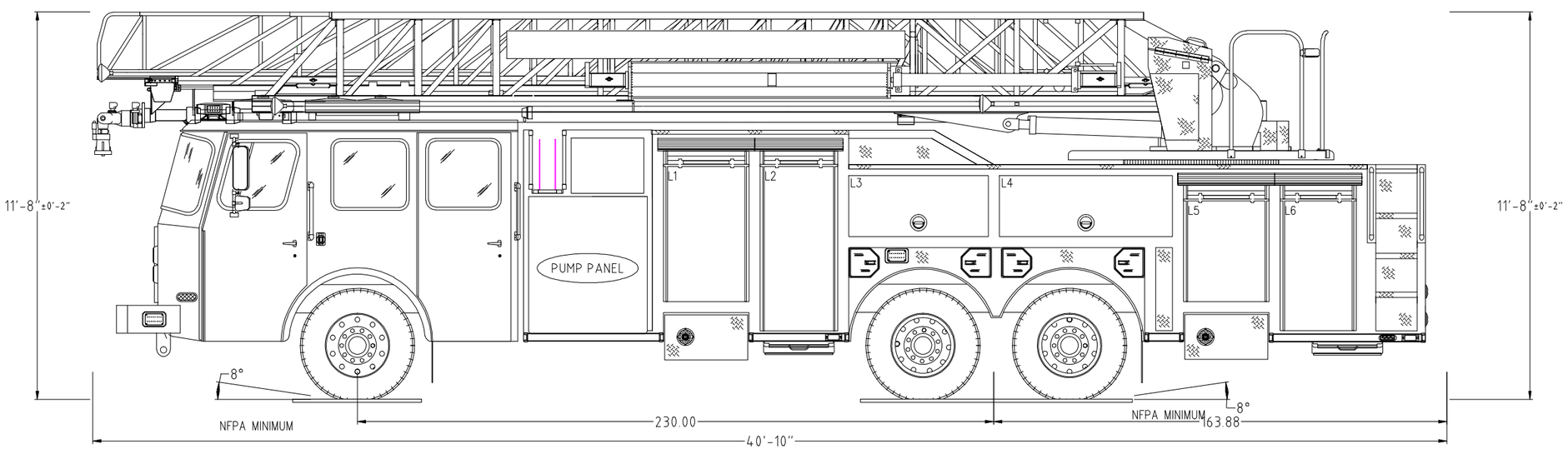

POWERED BY EZDRAW

Notice: This drawing provides a GENERAL REPRESENTATION of the vehicle configuration and should be used for evaluation purposes. The respective dimensions shown,including overall height and length, are estimates and may vary due to manufacturing processes. All other items such as lighting and fixtures, plumbing, compartmentation, and other generally assembled details are shown for REFERENCE ONLY and may not be a direct reflection of the final truck configuration. In ALL situations where this drawing may conflict with the specifications, THE SPECIFICATIONS, AS REFLECTED IN THE APPROVED SHOP ORDER, SHALL PREVAIL. Unless otherwise specified, the proposed apparatus will be manufactured to the latest NFPA recommendations as well as other applicable federally regulated safety regulations. E-One reserves the right to engineer and incorporate design improvements and changes without notice, while adhering to the intent of the specification.

1500 GPM HALE QMAXPUMP 0 TOTAL VOLUME 0 TOTAL FOAM	HOSE LOADS :

	OPENING		INTERIOR DIMENSIONS				
COMPT.	WIDTH	HEIGHT	WIDTH	LOWER HEIGHT	LOWER DEPTH	UPPER HEIGHT	UPPER DEPTH
L1	29	50	31	58	14	50	19
L2	26	60.56	28	68.56	25	60.56	19
L3	50.5	22	50.5	N/A	N/A	22	25
L4	62.5	22	62.5	N/A	N/A	22	20
L5	29	37.5	31	45.5	14	37.5	18
L6	25.5	48	27.5	56	22	48	18
R1	29	50	31	58	14	50	19
R2	26	60.5	28	68.5	25	60.5	19
R3	31	19.5	31	30	14	N/A	N/A
R4	50.5	30	50.5	30	22	N/A	N/A

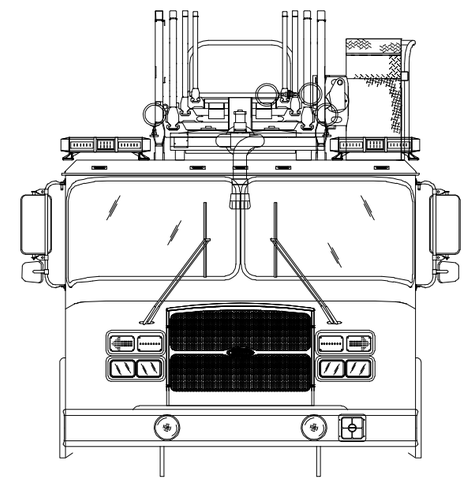

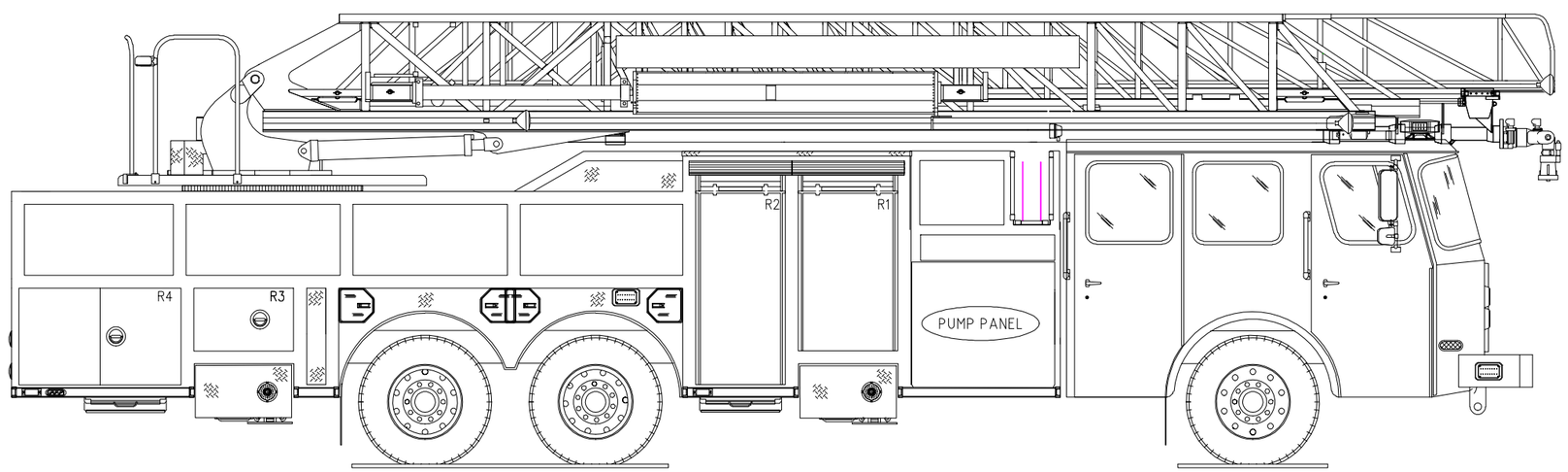

POWERED BY EZDRAW

Fire Apparatus Quotation for:
STATE OF OHIO TERM SCHEDULE

Quotation Number: 57493 Rev: 7

Unit Description: AERM-CYC2-137L

Quote Description: Aerial Rear Mount, Cyclone II, 137 Foot Ladder

Salescode	Extended Description	Qty
TESTING COMPLIANCE STANDARD		
1001-0015	The E-ONE supplied components of the vehicle shall meet the requirements of NFPA 1901, 2009 edition.	1
BUMPERS		
1160-0000	Bumper 10" stainless steel.	1
1160-0010	1/8" Front Bumper Gravel Shield.	1
1160-0013	16" Front Bumper Gravel Shield Extension.	1
FRAME ASSEMBLY		
1250-0005	Frame - Torque box for tandem axle RM aerial.	1
AXLE OPTIONS		
1025-0023	Meritor RT-50-160 rear tandem axle 54,000 lb. capacity.	1
1025-0028	Koni shock absorbers for front axle - adjustable.	1
1025-0060	Meritor FL943 front axle 22,100lb	1
SUSPENSIONS		
1070-0002	Rear suspension springs rated equal to the capacity of the axles.	1
WHEEL OPTIONS		
1050-0007	Front axle wheel trim kit. Includes stainless steel lug nut covers (chrome plated plastic if applicable) and center cap with E-ONE logo. Note: Center cap will have an inspection port IPO a logo if equipped with Stemco oil seals.	1
1050-0009	Rear axle (tandem) wheel trim kit. Includes stainless steel lug nut covers (chrome plated plastic if applicable) and center caps with E-ONE logo. E-ONE custom chassis w/steel wheels will have chrome plated plastic lug covers.	1
1050-0044	Accuride aluminum wheels for front axle (2).	1
1050-0046	Accuride aluminum wheels for rear axles (8).	1
TIRE OPTIONS		

1060-0022	Eight Michelin 12R rear tires with XDN2 mud and snow tread.	1
1060-0046	Two Michelin 425 tires model XFE for front axle.	1
1060-0050	Tire pressure monitoring valve stem caps.	1
BRAKE SYSTEMS		
1100-0001	Meritor EX225H 17" disc brakes for front axle.	1
1100-0006	Parking brake release mounted on the driver's side lower dash.	1
1100-0008	Brake system air 6X4.	1
1100-0014	ArvinMeritor 16-1/2" x 7" S-cam brakes with cast brake drums for a tandem rear axle.	1
1100-0026	G4 Electronic Stability Control (6x4), Includes RSC and ATC. Not available on 6x6 or commercial chassis.	1
AIR SYSTEM OPTIONS		
1110-0000-001	Inlet for air system. Location: driver door jamb.	1
1110-0002	Air dryer Bendix AD-9.	1
1110-0006	Air lines nylon.	1
1110-0026	Air horns recessed in bumper (PR).	1
1110-0027	Isolated air tank. Includes pressure protection valve.	1
1110-0043	Auxiliary air tank to be plumbed to the following optional accessories (if equipped): Chassis air horns, brake system air outlet, air reel, light tower and or customer/dealer supplied pneumatic add-on(s).	1
ENGINES & TRANSMISSIONS		
1200-0017	Push-button transmission shift selector.	1
1200-0021	TransSynd synthetic transmission fluid for EVS 4000.	1
1200-0096	Electronically limited speed to 60 MPH.	1
1200-0239	Eng/Trans Cummins ISX12 500HP with EVS4000 transmission. 2013 EPA Compliant.	1
SECONDARY BRAKING		
1125-0002	Jacobs engine compression brake.	1
COOLING PACKAGE		
1800-0013	Cooling system for use with Cyclone II X, Typhoon X, and Quest chassis. For use with 2010/2013 EPA engines. Includes coolant recovery system.	1
FUEL SYSTEMS		
1350-0004	Fuel system 50 gallon saddle tanks.	1
1350-0011	Fuel pump electric w/re-prime.	1
1350-0022	Fuel line hose rubber.	1
ALTERNATOR		
1700-0005	Alternator Leece Neville 320 amp. 320 amp SAE/275 amp NFPA.	1

BATTERIES		
1400-0002	Battery four group 31 1000 CCA.	1
CHASSIS OPTIONS		
1680-0005	Thermatic fan clutch.	1
1680-0007	Drivelines 1810. Required on 1550 lb/ft torque engines.	1
1680-0008	Tow eyes front painted below bumper/cab (PR).	1
1680-0012	Tow eyes rear frame painted.	1
1680-0017	Hotshift PTO.	1
1680-0188	Aerial hydraulics installed on bottom port of EVS4000 transmission (to allow for flat rear cab floor). For use on aerials without seperate PTO for hyd generator.	1
1680-0250-M58	Diesel Exhaust Fluid (DEF) 5 gallon tank for 2013 EPA engines. Location: left side below rear of cab.	1
CAB MODEL		
1520-0008	Cyclone II X medium cab with 58" CA	1
CAB ROOF TYPE		
1615-0004	Cab roof to be "flat" with trough for waterway. Required with HM100 (with waterway), HP100 (all), CR100/92 Pltfm (SdStckr and W/O/P) or HP100 Pltfrm (all).	1
CAB BADGE PACKAGE		
1610-0000	Cab and body to have applicable E-ONE logos.	1
CAB DOOR OPTIONS		
1550-0003	Rear crew cab doors in the medium position.	1
1550-0005	Driver and officer cab door windows. Include forward vent windows.	1
1550-0011	Rear crew cab door windows. Includes manual roll-down actuation. Not available with paddle style door latching.	1
1550-0016	Cab door panels ABS.	1
1550-0025	All cab doors shall have "L" style exterior latches.	1
1550-0027	Front cab door windows to manually roll down.	1
1550-0037-659	(4) Incandescent cab step area lighting. Locate each light in on each cab door in the inboard position. Lights to be switched with door ajar.	1
1550-0044	All cab door kick plates to be made from diamond plate aluminum.	1
1550-0059-000-72	Reflective Yellow/Red printed striping positioned in the "A" formation located in the lower cab door panels.	1
1550-0077	Interior cab door locks - manual. Will be individually actuated from each respective door. Includes barrel style key lock on each exterior cab door.	1
1550-0084	All cab exterior access doors to have 1250 keyed locks.	1
MIRRORS		
1670-0003	Velvac 2010 mirrors. Door mounted west coast style with remote control and heat.	1

MISC EXTERIOR CAB OPTIONS		
1550-0020	Windows cab side fixed driver's side.	1
1550-0033	Windows cab side fixed officer's side.	1
1675-0022	Pair of 18" handrails located just behind driver and officer front door one each side.	1
1675-0023	Pair of 18" handrails located just behind driver and officer rear door (ALS doors if equipped) one each side.	1
1675-0030	Mud flaps, front, black with E-ONE logo.	1
1675-0047	Rear cab wall to be 3/16" aluminum diamond plate.	1
HVAC		
1515-0018	Air conditioning for the CII X and Quest with Cummins ISM, ISX or Detroit Diesel Series 60 engine, roof top mounted condenser.	1
1685-0057	Heaters rear with covers (PR), and front heater with heat to the feet for the driver and officer.	1
SEATS		
1510-0003	Seats, Inc. brand 911 cab seats.	1
1510-0007	Seat cover material vinyl.	1
1510-0008	Seat color gray.	1
SEATS		
1510-0035-147	Universal air pack bottle bracket (EA). Location: officer's seat.	1
1510-0035-148	Universal air pack bottle bracket (EA). Location: rear facing driver's side.	1
1510-0035-151	Universal air pack bottle bracket (EA). Location: inboard driver's side rear wall.	1
1510-0035-152	Universal air pack bottle bracket (EA). Location: inboard officer's side rear wall.	1
1510-0035-215	Universal air pack bottle bracket (EA). Location: rear facing officer's side.	1
1510-0038	Driver seat 911 air ride.	1
1510-0042	Officer seat to be 911 fixed SCBA.	1
1510-0050	Rear facing 911 seat with SCBA driver's side.	1
1510-0053	Rear facing 911 seat with SCBA officer's side.	1
1510-0062	Two man bench centered on rear wall with 911 SCBA backs.	1
1685-0033	Seating capacity tag of six occupants.	1
MISC INTERIOR CAB OPTIONS		
1685-0000	Cab interior gray. Does not include engine cover or seat color.	1
1685-0005	Lexan sun visors, driver and officer's side overhead.	1
1685-0168	ABS Dash package. Includes center and officer side dash, lower kick panels and "A" post covers.	1
1685-0187	Severe duty engine cover, molded polyurethane.	1
CAB ELECTRICAL OPTIONS		
1750-0013-172	Turn signal Whelen 600 LED amber arrow pair located upper headlight bezel.	1

1750-0029	Switch horn button two position DOT/air horn.	1
1750-0046-195	Cab Headlights. Position: lower.	1
1750-0059-179-04	Receptacle inlet 20 amp with a Yellow cover. Location: outside driver's door next to handrail.	1
1750-0072-593	12 VDC (or 24VDC) electrical outlet in the cab wired battery hot. Location: officer side dash.	2
1750-0075	English dominant main cab gauge cluster.	1
1750-0188	DPF regeneration override switch.	1
1750-0198-A31	Battery charger to be located behind driver's seat.	1
1750-0343	Battery charger E-ONE LPC 20. 120 volt inlet, 20 amp output.	1
5400-0037	Dome Lts Red/White Incandescent. Package includes two lights mounted in the front and two mounted in the rear of the cab. White light wire through door and light assembly mounted switch. Red light through light assembly mounted switch.	1
BODY SPEC		
3090-0000	Body Specs - SideStacker aerial with tandem axle. Includes left rear staircase with pocket style drop down step.	1
BODY COMPT REAR		
3110-0058	Rear of body to have flush un-painted smooth plate body panels to facilitate rear body striping.	1
AERIAL BODY OPTIONS		
3310-0002	Compartments driver side CR100/95 platform SideStacker with 300g tank. Includes rescue style compartments.	1
3310-0014	Compartments officer side CR100/CR137/95 platform SideStacker with 300g tank. Includes rescue style extended height compartments ahead of wheel well with extended hosebed.	1
3310-0032	Recessed tubes for (6) pike poles. Not available on HP75 SideStacker.	1
3310-0049	Auxiliary jack pad 24X24 (4) with side mounted handles. Includes welded mounting brackets.	1
3310-0050	Crosslay triple 5.5" wide single stack to hold up to 200' of 2.0" DJ (each) or 150'-200' 2.5" DJ (each). Includes storage pan to rear of crosslays	1
3310-0069	Rear ladder tunnel doors. Vertically hinged smooth plate to match rear body finish.	1
3310-0162	Jack leg opening covers diamond plate (4) sets. Includes diamond plate outrigger covers and fixed diamond plate filler panels. HM100/110 requires surface mount warning lights.	1
DOORS		
3300-0007-017	Door single vertically hinged painted. Location(s): R3	1
3300-0011-005	Door single horizontally hinged lift-up painted. Location(s): L3	1
3300-0011-006	Door single horizontally hinged lift-up painted. Location(s): L4	1
3300-0017-003	Door roll up short (up to 45") with satin finish ROM. Location(s): L1.	1
3300-0017-007	Door roll up short (up to 45") with satin finish ROM. Location(s): L5.	1

3300-0019-004	Door roll up tall (greater than 45") with satin finish ROM. Location(s): L2.	1
3300-0019-008	Door roll up tall (greater than 45") with satin finish ROM. Location(s): L6.	1
3300-0019-015	Door roll up tall (greater than 45") with satin finish ROM. Location(s): R1.	1
3300-0019-016	Door roll up tall (greater than 45") with satin finish ROM. Location(s): R2.	1
3300-0164-018	Door double vertically hinged w/rotary latches - painted . Location(s): R4	1
COVERS		
3305-0007-000-02	Vinyl Red hose bed cover with attached rear flap(s).	1
3305-0008-000-02	Vinyl Red crosslay cover with attached side flaps.	1
PUMP PANELS		
3134-0016	Stainless steel driver and officer side pump panels.	1
3134-0064	The gauge panel(s) on the driver side of the Side Mount module to be hinged upward. Panel(s) to include (2) mechanical/pneumatic (as applicable to panel size) hold opens and latches.	1
3134-0100	Officer side upper pump access panel to be horizontally hinged with diamond plate door. Includes (2) push button latches and (1) hold open device.	1
MISC PUMP PANEL OPTIONS		
4460-0003	Pump panel tags color coded per NFPA compliance.	1
WATER TANK		
4010-0195	300 gallon "T" water tank. UPF Poly III blue fill tower.	1
TANK PLUMBING		
4450-0010	2" tank fill Akron manual valve.	1
4450-0022	3" tank to pump Akron manual valve.	1
LADDER STORAGE / RACKS		
3365-0013-607	Center mounted ladder tunnel. Ladder rack to hold: (2) PEL-35, PEL-28, PEL-24, PRL-20, PRL-16 and FL-10 (with rubber block feet).	1
HANDRAILS / STEPS		
3330-0002-050	Slide-out platform, rollerless. Includes chrome grab handle centered on the front face of the platform (includes hand rail as applicable). Located below driver side pump panel.	1
3330-0105-060	Dual lighted LED folding step. Location: officer side front compartment face. Each location requires a minimum of (1) handrail per NFPA.	3
3330-0105-062	Dual lighted LED folding step. Location: driver side front compartment face. Each location requires a minimum of (1) handrail per NFPA.	3
MISC BODY OPTIONS		
3090-0001	Hose bed capacity aerial. Provide standard size hose bed.	1
3090-0002	The unit has no overall height restrictions.	1
3090-0004	The unit has no overall length restrictions.	1

3340-0093	Mud flaps, rear, black with E-ONE logo.	1
3340-0107	Diamond plate tandem axle wheel well. Includes bolt-on composite wheel well liners and fenderettes.	1
3340-0270	The painted aerial body side panels shall be smooth / flush. Applies to SideStacker HB side, panels next to water tank on MM, and upper body sides on RLP.	1
SCBA BOTTLE STORAGE		
3320-0009	SCBA Bottle Storage. (8) Cast Product SCBA bottle storage with gasketed doors. (4) each side in rear wheel well area.	1
PUMPS		
4005-0016	Hale QMAX 1000-2250 GPM single stage pump.	1
4005-0031	Rating 1500 GPM.	1
PUMP CERTIFICATION		
4475-0000	Pump certification 750-2250 GPM	1
PUMP OPTIONS		
4015-0007	Pump cooler, 1/4" valve with 3/8" tubing.	1
4015-0008	Zinc anodes for Hale pump (PR), (1) discharge side and (1) intake side.	1
4015-0022	Mechanical pump seal - Hale.	1
4015-0052-198	Steamers to be Flush. Location: driver's side.	1
4015-0052-199	Steamers to be Flush. Location: officer's side.	1
4015-0073	Manual operated master pump drain. The master drain shall be clearly marked and placed in accessible location rearward below running board on driver side or L1 compartment.	1
INTAKES		
4440-0005	2.5" Left Intake Akron Manual Valve.	1
INTAKE OPTIONS		
4445-0009	Intake relief valve, Akron.	1
DISCHARGES AND PRECONNECTS		
4415-0012-654	1.5" crosslay with Akron manual valve. Location: crosslay 1 & 2.	2
4415-0051	4" Waterway Discharge with 3" Akron Manual Valve.	1
4415-0058-655	2.5" Crosslay Akron Manual Valve. Location: crosslay 3.	1
4415-0161-581	2.5" Left Panel Discharge Akron Manual Valve w/30 Degree Droop. Location: left side discharge 1.	1
4415-0161-582	2.5" Left Panel Discharge Akron Manual Valve w/30 Degree Droop. Location: left side discharge 2.	1
4415-0164-584	2.5" Right Panel Discharge Akron Manual Valve w/30 Degree Droop. Location: right side discharge 2.	1
4415-0165-583	3" Right Panel Discharge Akron Manual Valve w/30 Degree Droop. (Waterous pumps noted if location is forward of steamer use lower discharge port.) Location:	1

	right side discharge 1.	
DISCHARGE OPTIONS		
4417-0089-359	Lift lever quarter turn bleeder valve. Plumbed for use with: waterway discharge.	1
4417-0089-573	Lift lever quarter turn bleeder valve. Plumbed for use with: crosslay preconnect.	3
4417-0089-575	Lift lever quarter turn bleeder valve. Plumbed for use with: left discharge.	2
4417-0089-576	Lift lever quarter turn bleeder valve. Plumbed for use with: right discharge.	2
PRESSURE GOVERNORS		
4465-0011	Class 1 TPG pressure governor. Includes, water, oil, volt and tachometer.	1
GAUGES		
4435-0001	Class 1 Intelli-Tank water tank level gauge.	1
4435-0013	4.5" Class 1 compound pressure gauge (30-0-600 PSI).	2
4435-0015-352	2.5" Class 1 compound pressure gauge (30-0-600). Discharge(s): 1.5 in. crosslay preconnect.	2
4435-0015-353	2.5" Class 1 compound pressure gauge (30-0-600). Discharge(s): 2.5 in. crosslay preconnect.	1
4435-0015-359	2.5" Class 1 compound pressure gauge (30-0-600). Discharge(s): waterway discharge.	1
4435-0015-581	2.5" Class 1 compound pressure gauge (30-0-600). Discharge(s): left side discharge 1.	1
4435-0015-582	2.5" Class 1 compound pressure gauge (30-0-600). Discharge(s): left side discharge 2.	1
4435-0015-583	2.5" Class 1 compound pressure gauge (30-0-600). Discharge(s): right side discharge 1.	1
4435-0015-584	2.5" Class 1 compound pressure gauge (30-0-600). Discharge(s): right side discharge 2.	1
ELECTRICAL SYSTEMS		
5010-0013-E91	Vehicle data recorder - 2009 NFPA compliant. Includes occupant detection with display. Display location: Driver side of center dash electrical cover.	1
5010-0039	V-MUX Electrical system for aerials.	1
5010-0059-339	VFD Text display for V-MUX electrical system. Location: center of dash.	1
LIGHT BARS		
5300-0084-034	Whelen Mini-Freedom LED light bars (PR) model FNMINI 24" with red/clear lenses and MKEZ7 mounts. Location: front cab corners.	1
WARNING LIGHT PACKAGES		
5550-0059-538	Whelen Super LED lower level warning light package. Includes (8) red 600 LED light heads and (2) red 500 LED light heads w/chrome flanges. Locate side facing lights: at forward most position, in rear wheel well offset to front, and side facing at rear of body in rubrail if equipped.	1
WARNING LIGHTS		

5600-0078-290-06	Whelen Super LED beacon (PR) model L31H with Red domes. Location above L2/R2 compartments offset rearward to supplement upper rear warnings.	1
5600-0078-479-06	Whelen Super LED beacon (PR) model L31H with Red domes. Location rear upper body on aerial style brackets.	1
5600-0149-170	Hazard (door ajar) light, 2.5" incandescent. Location: center overhead.	1
SIRENS		
5500-0015	Whelen model 295SLSA1 siren with microphone (replaced 295HFSA1).	1
5500-0024-170	The electronic siren control is to be located on the center overhead.	1
SPEAKERS		
5510-0018-209	Whelen SA122FMP electronic siren speaker recessed in front bumper. Location: driver side front bumper.	1
DOT LIGHTING		
5150-0006	Whelen 600 series LED horizontal mount tail lights. Includes LED stop/tail, arrow turn and halogen back-up lights with horizontal Cast 3 housing and weatherproof connectors.	1
5150-0017	License plate light LED with chrome housing located at the rear of the body.	1
5150-0026	Marker light LED body/cab package. E-ONE custom cab with aerial ladder, Mid-Mount platform or Bronto bodies only.	1
LIGHTS - COMPARTMENT, STEP & GROUND		
5380-0029	Ground light package for cab and body - large.	1
5380-0033	Step light package body - small.	1
5380-0136	Compartment light package Amdor Luma-Bar LED for large bodies. Includes one light per compartment (two if transverse).	1
LIGHTS - DECK AND SCENE		
5390-0003	Hose bed light Truck-Lite. Locate at the front area of the hose bed. Switched with work light switch in cab.	1
5390-0005	Crosslay light deck Unity. Locate to rear of crosslay (SM) or forward of crosslay (TM).	1
5390-0007	Deck/scene light circuit wiring through chassis reverse. Requires rear deck or scene light.	1
5390-0048-444	Whelen 600 series gradient Super LED scene lights (PR) with weatherproof connectors. Switch in cab (driver and officer side lights switched separately). Locate (1) each side over rear ladder tunnel.	1
LIGHTS - NON-WARNING		
5400-0003	Engine compartment light (EA).	1
5400-0008	(1) pump panel light over the pump control area to be wired to come on when pump shift is placed in pump. (Side mount forward light noted, Top Mount is center light.)	1
5400-0010	Incandescent pump compartment light (EA).	1
5400-0039	Spotlight Specialty 2150 hand held located on officer's side of cab dash - hardwired.	1

5400-0047	Pump panel light package with (3) lights per side pump panel. Pump panels over 45" may require additional lights. Side mount only.	1
CONTROLS / SWITCHES		
5100-0000-199	Foot switch to control air horns located officer's side.	1
5100-0007-198	Foot switch to control electronic siren located driver's side.	1
CAMERAS / INTERCOM		
6570-0008	Intercom aerial 2-way. Atkinson Dynamics (Federal). Speaker to be located to rear of platform on Bronto units.	1
MISC ELECTRICAL		
1750-0082-762	12V power distribution module. Includes (6) battery hot and (6) switched hot circuits. 100 amps max (IATS). Location: behind officer's seat.	1
5110-0017	Back-up alarm 97 dB.	1
AERIAL MODEL		
6100-0034	Ladder CR137 SideStacker with waterway to 110'. Includes left side console with cover, turntable mansaver bars, split steps at tip and jack leg flood lights.	1
AERIAL HYDRAULIC SYSTEM OPTIONS		
6150-0003-216	Gauge aerial hydraulic oil level. Electronic display to be located on pump operator's panel.	1
MONITORS		
6300-0002	Monitor Akron electric 1000 GPM for ladder. Includes tip and base controls.	1
6300-0017	Monitor painted silver from OEM.	1
AERIAL WARNING LIGHTS		
6550-0002	Outrigger warning lights (4) LED. Truck-Lite model 91R.	1
AERIAL LIGHTING		
6560-0002-231	Spot light 12V located left side tip.	1
6560-0005	Flood lights Unity at base (PR).	1
6560-0032	Locate spot, flood and /or quartz lights on ladder fly section as far back from tip as possible.	1
WATERWAY OPTIONS		
6350-0005	Rear 4" NST waterway inlet for rear mounted aerials. Includes chrome cap.	1
6350-0006	2.5" Waterway Class 1 pressure gauge 30-0-600. Locate next to waterway inlet.	1
6350-0010	Flowminder with single readout and totalizer for the aerial waterway to be located at the aerial control station.	1
AERIAL EQUIPMENT		
6500-0011-139	Pike pole tube for 6' pole on ladder. Location: right side fly section.	1
6500-0019-138	Axe bracket mounted on aerial. For use with a 6 lb. axe only. Location: left side fly	1

	section.	
AERIAL LADDER BRACKETS		
6600-0004-250	Lift out style roof ladder bracket. Locate outside base section for a PRL-16 on left side of base section. Available on 95RM, 110, CR100 and HM100.	1
SIGN PLATES		
6750-0002-000-39	Aerial sign plates 22 x 144 (PR). Available on HM100, HM110, 95, CR100 and CR137 only. Does not include lettering. Color: Job Color.	1
AERIAL TESTING		
6900-0000	Aerial flow test - 3rd party.	1
6900-0002	Aerial 2009 NFPA Certification.	1
HAND TOOLS		
7600-0005	Pike Pole Fiberglass 6'.	3
7600-0007	Pike Pole Fiberglass 10'.	2
7600-0008	Pike Pole Fiberglass 12'	2
GROUND LADDERS		
7800-0010	Alco-Lite PRL-16' roof ladder.	2
7800-0016	Alco-Lite PEL-24' 2-section extension ladder.	1
7800-0021	Alco-Lite PEL-28' extension ladder.	1
7800-0024	Alco-Lite PEL-35' extension ladder.	2
7800-0032	Alco-Lite FL-10, 10' folding ladder w/safety shoes.	1
7800-0038	Alco-Lite PRL-20' roof ladder.	1
MISC LOOSE EQUIPMENT		
7600-0016	Wheel chocks 44" NFPA complaint, pair (PR) of Zico SAC-44. Up to 44" diameter tires. Includes mounting brackets.	4
7900-0014	DOT Required Drive Away Kit - Kit includes three (3) triangular warning reflectors with carrying case. This kit is for the end user and is to remain with the truck.	1
EXTERIOR PAINT		
8100-0084	All applicable pump/pre-connect application modules are to have a job color finish. Includes upper and lower pump modules, crosswalk module and/or speedlay/pre-connect module (as applicable). Rear mounted body/pump module to be painted job color.	1
8100-0116	Rear body surface to have a sanded finish (not painted job color). Includes hinged doors that do not have discrete sales codes and removable panels.	1
8100-0176-000-17	Paint E-ONE chassis cab - Sikkens paint. Color: FLNA3225E-1 Red.	1
8100-0183-000-17	Paint Body - Large - For Aerials, T/A Tankers/Wetsides, Rear Mounts and Rescues. Sikkens paint. Color: FLNA3225E-1 Red.	1
8100-0354	Paint lift cylinders, extension cylinders and upper turntable steelwork primary job color (does not apply to TT deck).	1

INTERIOR PAINT			
8150-0011	The interior of the cab to be painted Zolatone gray.	1	
STRIPING			
8200-0016	White reflective tape on (4) outriggers.	1	
8300-0002-334-12	NFPA Scotchlite Stripe - 4" wide and straight on front/sides of cab and sides/rear of body. Color: White. Location: bottom of stripe flush with top of bumper and straight back.	1	
8300-0042	White rubrail scotchlite insert.	1	
8300-0084-000-72	Chevron "A" style 6" printed sheet Scotchlite striping on rear of body. Includes rear facing extrusions, panels and doors inboard/outboard of the beavertails (if applicable). Colors to be Yellow/Red.	1	
GRAPHICS			
8400-0022	Logo E-ONE (PR) on aerial lift cylinder. Logo to be black and white reflective material approx 14" long located midway along outward surface of cylinder.	1	
WARRANTY / STANDARD & EXTENDED			
9100-0000	Standard 1 Year Warranty.	1	
9100-0003	Lifetime Frame Warranty.	1	
9100-0004	10 Year/100,000 Mile Structural Warranty - Statement of Warranty.	1	
9100-0005	10 Year Stainless Steel Plumbing Warranty - Statement of Warranty.	1	
9100-0007	20 Year Aerial Device Structural Warranty - Integrity Limited Warranty.	1	
9100-0019	10 Year Limited Paint and Perforation Warranty - For Sikkens Paint.	1	
SUPPORT, DELIVERY, INSPECTIONS AND MANUALS			
9300-0000	Vehicle familiarization aerial (Domestic).	1	
9300-0009	Manuals, Operator and Service CD-ROM.	1	
9300-0016	Approval Drawings-Standard.	1	
PRICE	2013 E-ONE HP137L AERIAL LADDER QUINT - CYCLONE CUSTOM CHASSIS		$807,654.

STATE OF OHIO TERM SCHEDULE

4200 SURFACE RD
COLUMBUS, OH 43228

Quote No: 57493

3/8/2013

Quote Rev:7 Drawing Rev:3

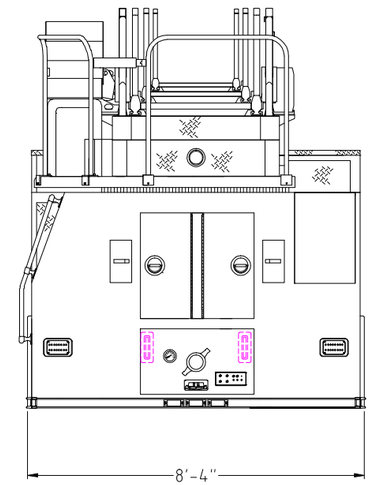

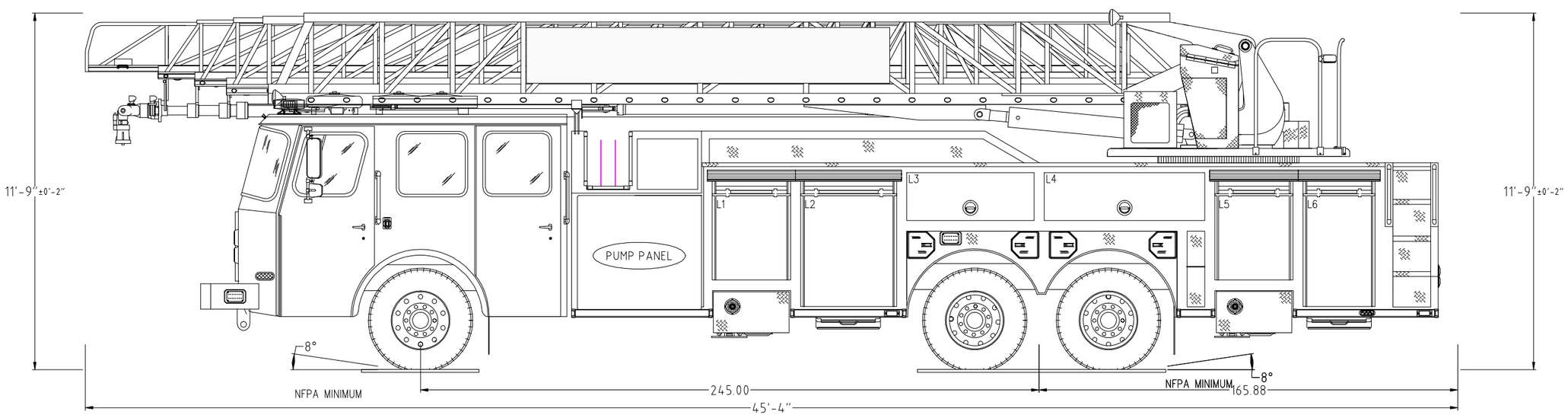

POWERED BY EZDRAW

Notice: This drawing provides a GENERAL REPRESENTATION of the vehicle configuration and should be used for evaluation purposes. The respective dimensions shown,including overall height and length, are estimates and may vary due to manufacturing processes. All other items such as lighting and fixtures, plumbing, compartmentation, and other generally assembled details are shown for REFERENCE ONLY and may not be a direct reflection of the final truck configuration. In ALL situations where this drawing may conflict with the specifications, THE SPECIFICATIONS, AS REFLECTED IN THE APPROVED SHOP ORDER, SHALL PREVAIL. Unless otherwise specified, the proposed apparatus will be manufactured to the latest NFPA recommendations as well as other applicable federally regulated safety regulations. E-One reserves the right to engineer and incorporate design improvements and changes without notice, while adhering to the intent of the specification.

1500 GPM HALE QMAXPUMP
0 TOTAL VOLUME
0 TOTAL FOAM

HOSE LOADS :

	OPENING		INTERIOR DIMENSIONS				
COMPT.	WIDTH	HEIGHT	WIDTH	LOWER HEIGHT	LOWER DEPTH	UPPER HEIGHT	UPPER DEPTH
L1	29	34.5	31	42.5	14	34.5	19
L2	36	45	38	53	26	45	26
L3	50.5	19	50.5	N/A	N/A	19	26
L4	63.5	19	63.5	N/A	N/A	19	20
L5	29	34.5	31	42.5	14	34.5	18
L6	26.5	45	28.5	53	22	45	18
R1	29	47	31	55	14	47	19
R2	36	57.5	38	65.5	26	57.5	19
R3	31	19.5	31	30	14	N/A	N/A
R4	49.5	30	49.5	30	22	N/A	N/A

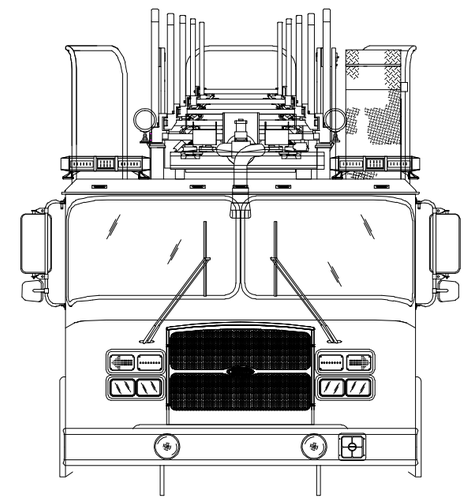

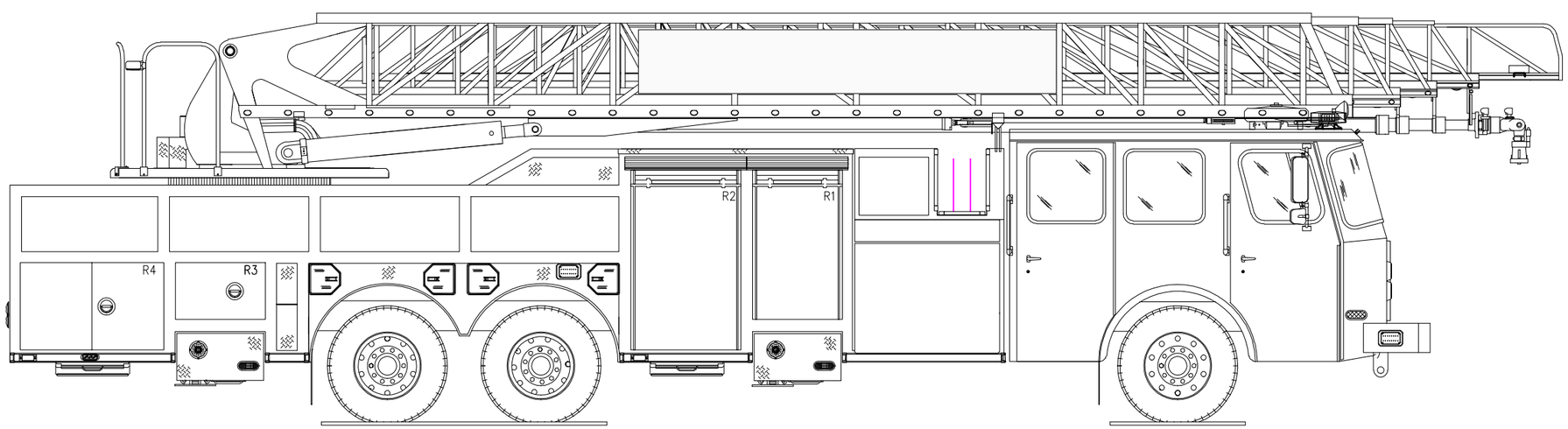

POWERED BY EZDRAW

Fire Apparatus Quotation for:
STATE OF OHIO TERM SCHEDULE

Quotation Number: 57494 Rev: 14

Unit Description: AERM-CYC2-100P

Quote Description: Aerial Rear Mount, Cyclone II, 100 Foot Platform

Salescode	Extended Description	Qty
TESTING COMPLIANCE STANDARD		
1001-0015	The E-ONE supplied components of the vehicle shall meet the requirements of NFPA 1901, 2009 edition.	1
BUMPERS		
1160-0000	Bumper 10" stainless steel.	1
1160-0010	1/8" Front Bumper Gravel Shield.	1
1160-0013	16" Front Bumper Gravel Shield Extension.	1
FRAME ASSEMBLY		
1250-0014	Frame - Torque box for HP100 platform.	1
AXLE OPTIONS		
1025-0002	Dana 22I 22,800lb front axle.	1
1025-0023	Meritor RT-50-160 rear tandem axle 54,000 lb. capacity.	1
1025-0028	Koni shock absorbers for front axle - adjustable.	1
SUSPENSIONS		
1070-0015	Ridewell Dynalastic rear suspension (40-54K) rated equal to the capacity of the axles. Torque box applications only.	1
WHEEL OPTIONS		
1050-0007	Front axle wheel trim kit. Includes stainless steel lug nut covers (chrome plated plastic if applicable) and center cap with E-ONE logo. Note: Center cap will have an inspection port IPO a logo if equipped with Stemco oil seals.	1
1050-0009	Rear axle (tandem) wheel trim kit. Includes stainless steel lug nut covers (chrome plated plastic if applicable) and center caps with E-ONE logo. E-ONE custom chassis w/steel wheels will have chrome plated plastic lug covers.	1
1050-0044	Accuride aluminum wheels for front axle (2).	1
1050-0046	Accuride aluminum wheels for rear axles (8).	1
TIRE OPTIONS		

1060-0022	Eight Michelin 12R rear tires with XDN2 mud and snow tread.	1
1060-0046	Two Michelin 425 tires model XFE for front axle.	1
1060-0050	Tire pressure monitoring valve stem caps.	1
BRAKE SYSTEMS		
1100-0006	Parking brake release mounted on the driver's side lower dash.	1
1100-0008	Brake system air 6X4.	1
1100-0014	ArvinMeritor 16-1/2" x 7" S-cam brakes with cast brake drums for a tandem rear axle.	1
1100-0026	G4 Electronic Stability Control (6x4), Includes RSC and ATC. Not available on 6x6 or commercial chassis.	1
1100-0031	Dana ESD225 17" disc brakes for front axle.	1
AIR SYSTEM OPTIONS		
1110-0000-001	Inlet for air system. Location: driver door jamb.	1
1110-0002	Air dryer Bendix AD-9.	1
1110-0006	Air lines nylon.	1
1110-0026	Air horns recessed in bumper (PR).	1
1110-0027	Isolated air tank. Includes pressure protection valve.	1
1110-0043	Auxiliary air tank to be plumbed to the following optional accessories (if equipped): Chassis air horns, brake system air outlet, air reel, light tower and or customer/dealer supplied pneumatic add-on(s).	1
ENGINES & TRANSMISSIONS		
1200-0017	Push-button transmission shift selector.	1
1200-0021	TransSynd synthetic transmission fluid for EVS 4000.	1
1200-0096	Electronically limited speed to 60 MPH.	1
1200-0239	Eng/Trans Cummins ISX12 500HP with EVS4000 transmission. 2013 EPA Compliant.	1
SECONDARY BRAKING		
1125-0002	Jacobs engine compression brake.	1
COOLING PACKAGE		
1800-0013	Cooling system for use with Cyclone II X, Typhoon X, and Quest chassis. For use with 2010/2013 EPA engines. Includes coolant recovery system.	1
FUEL SYSTEMS		
1350-0005	Fuel system 65 gallons.	1
1350-0011	Fuel pump electric w/re-prime.	1
1350-0022	Fuel line hose rubber.	1
ALTERNATOR		
1700-0005	Alternator Leece Neville 320 amp. 320 amp SAE/275 amp NFPA.	1

BATTERIES		
1400-0002	Battery four group 31 1000 CCA.	1
CHASSIS OPTIONS		
1680-0005	Thermatic fan clutch.	1
1680-0007	Drivelines 1810. Required on 1550 lb/ft torque engines.	1
1680-0008	Tow eyes front painted below bumper/cab (PR).	1
1680-0012	Tow eyes rear frame painted.	1
1680-0017	Hotshift PTO.	1
1680-0250-M58	Diesel Exhaust Fluid (DEF) 5 gallon tank for 2013 EPA engines. Location: left side below rear of cab.	1
CAB MODEL		
1520-0008	Cyclone II X medium cab with 58" CA	1
CAB ROOF TYPE		
1615-0004	Cab roof to be "flat" with trough for waterway. Required with HM100 (with waterway), HP100 (all), CR100/92 Pltfm (SdStckr and W/O/P) or HP100 Pltfrm (all).	1
CAB BADGE PACKAGE		
1610-0000	Cab and body to have applicable E-ONE logos.	1
CAB DOOR OPTIONS		
1550-0003	Rear crew cab doors in the medium position.	1
1550-0005	Driver and officer cab door windows. Include forward vent windows.	1
1550-0011	Rear crew cab door windows. Includes manual roll-down actuation. Not available with paddle style door latching.	1
1550-0016	Cab door panels ABS.	1
1550-0025	All cab doors shall have "L" style exterior latches.	1
1550-0027	Front cab door windows to manually roll down.	1
1550-0037-659	(4) Incandescent cab step area lighting. Locate each light in on each cab door in the inboard position. Lights to be switched with door ajar.	1
1550-0044	All cab door kick plates to be made from diamond plate aluminum.	1
1550-0059-000-72	Reflective Yellow/Red printed striping positioned in the "A" formation located in the lower cab door panels.	1
1550-0077	Interior cab door locks - manual. Will be individually actuated from each respective door. Includes barrel style key lock on each exterior cab door.	1
1550-0084	All cab exterior access doors to have 1250 keyed locks.	1
MIRRORS		
1670-0003	Velvac 2010 mirrors. Door mounted west coast style with remote control and heat.	1
MISC EXTERIOR CAB OPTIONS		
1550-0020	Windows cab side fixed driver's side.	1

1550-0033	Windows cab side fixed officer's side.	1
1675-0022	Pair of 18" handrails located just behind driver and officer front door one each side.	1
1675-0023	Pair of 18" handrails located just behind driver and officer rear door (ALS doors if equipped) one each side.	1
1675-0030	Mud flaps, front, black with E-ONE logo.	1
1675-0047	Rear cab wall to be 3/16" aluminum diamond plate.	1
HVAC		
1515-0018	Air conditioning for the CII X and Quest with Cummins ISM, ISX or Detroit Diesel Series 60 engine, roof top mounted condenser.	1
1685-0057	Heaters rear with covers (PR), and front heater with heat to the feet for the driver and officer.	1
SEATS		
1510-0003	Seats, Inc. brand 911 cab seats.	1
1510-0007	Seat cover material vinyl.	1
1510-0008	Seat color gray.	1
1510-0035-147	Universal air pack bottle bracket (EA). Location: officer's seat.	1
1510-0035-148	Universal air pack bottle bracket (EA). Location: rear facing driver's side.	1
1510-0035-151	Universal air pack bottle bracket (EA). Location: inboard driver's side rear wall.	1
1510-0035-152	Universal air pack bottle bracket (EA). Location: inboard officer's side rear wall.	1
1510-0035-215	Universal air pack bottle bracket (EA). Location: rear facing officer's side.	1
1510-0038	Driver seat 911 air ride.	1
1510-0042	Officer seat to be 911 fixed SCBA.	1
1510-0050	Rear facing 911 seat with SCBA driver's side.	1
1510-0053	Rear facing 911 seat with SCBA officer's side.	1
1510-0062	Two man bench centered on rear wall with 911 SCBA backs.	1
1685-0033	Seating capacity tag of six occupants.	1
MISC INTERIOR CAB OPTIONS		
1685-0000	Cab interior gray. Does not include engine cover or seat color.	1
1685-0005	Lexan sun visors, driver and officer's side overhead.	1
1685-0168	ABS Dash package. Includes center and officer side dash, lower kick panels and "A" post covers.	1
1685-0187	Severe duty engine cover, molded polyurethane.	1
CAB ELECTRICAL OPTIONS		
1750-0013-172	Turn signal Whelen 600 LED amber arrow pair located upper headlight bezel.	1
1750-0029	Switch horn button two position DOT/air horn.	1
1750-0046-195	Cab Headlights. Position: lower.	1
1750-0059-179-04	Receptacle inlet 20 amp with a Yellow cover. Location: outside driver's door next to	1

	handrail.	
1750-0072-593	12 VDC (or 24VDC) electrical outlet in the cab wired battery hot. Location: officer side dash.	2
1750-0075	English dominant main cab gauge cluster.	1
1750-0188	DPF regeneration override switch.	1
1750-0198-A31	Battery charger to be located behind driver's seat.	1
1750-0343	Battery charger E-ONE LPC 20. 120 volt inlet, 20 amp output.	1
5400-0037	Dome Lts Red/White Incandescent. Package includes two lights mounted in the front and two mounted in the rear of the cab. White light wire through door and light assembly mounted switch. Red light through light assembly mounted switch.	1
BODY SPEC		
3090-0000	Body Specs - SideStacker aerial with tandem axle. Includes left rear staircase with pocket style drop down step.	1
BODY COMPT REAR		
3110-0058	Rear of body to have flush un-painted smooth plate body panels to facilitate rear body striping.	1
AERIAL BODY OPTIONS		
3310-0029	Auxiliary jack pad 26X26 (4) with side mounted handle. Includes (2) double mounting brackets.	1
3310-0032	Recessed tubes for (6) pike poles. Not available on HP75 SideStacker.	1
3310-0050	Crosslay triple 5.5" wide single stack to hold up to 200' of 2.0" DJ (each) or 150'-200' 2.5" DJ (each). Includes storage pan to rear of crosslays	1
3310-0069	Rear ladder tunnel doors. Vertically hinged smooth plate to match rear body finish.	1
3310-0072	Compartments driver side HP100 Platform SideStacker with 300g tank. Includes rescue style extended height compartments. The door on small compts next to rear outrigger to match wheelwell.	1
3310-0073	Compartments officer side HP100 Platform SideStacker with 300g tank. Includes rescue style extended height compartments ahead of wheel well with extended hosebed.	1
3310-0075	Upper dunnage area extension 34 x 58 diamond plate.	1
3310-0081	Jack leg opening cover diamond plate (4). Includes diamond plate outrigger cover and diamond plate filler panel.	1
DOORS		
3300-0007-017	Door single vertically hinged painted. Location(s): R3	1
3300-0007-018	Door single vertically hinged painted. Location(s): R4	1
3300-0007-019	Door single vertically hinged painted. Location(s): R5	1
3300-0011-005	Door single horizontally hinged lift-up painted. Location(s): L3	1
3300-0011-006	Door single horizontally hinged lift-up painted. Location(s): L4	1
3300-0017-007	Door roll up short (up to 45") with satin finish ROM. Location(s): L5.	1

3300-0019-003	Door roll up tall (greater than 45") with satin finish ROM. Location(s): L1.	1
3300-0019-004	Door roll up tall (greater than 45") with satin finish ROM. Location(s): L2.	1
3300-0019-015	Door roll up tall (greater than 45") with satin finish ROM. Location(s): R1.	1
3300-0019-016	Door roll up tall (greater than 45") with satin finish ROM. Location(s): R2.	1
COVERS		
3305-0007-000-02	Vinyl Red hose bed cover with attached rear flap(s).	1
3305-0008-000-02	Vinyl Red crosslay cover with attached side flaps.	1
PUMP PANELS		
3134-0016	Stainless steel driver and officer side pump panels.	1
3134-0064	The gauge panel(s) on the driver side of the Side Mount module to be hinged upward. Panel(s) to include (2) mechanical/pneumatic (as applicable to panel size) hold opens and latches.	1
3134-0100	Officer side upper pump access panel to be horizontally hinged with diamond plate door. Includes (2) push button latches and (1) hold open device.	1
MISC PUMP PANEL OPTIONS		
4460-0003	Pump panel tags color coded per NFPA compliance.	1
WATER TANK		
4010-0195	300 gallon "T" water tank. UPF Poly III blue fill tower.	1
TANK PLUMBING		
4450-0010	2" tank fill Akron manual valve.	1
4450-0022	3" tank to pump Akron manual valve.	1
LADDER STORAGE / RACKS		
3365-0076-Q04	Center mounted ladder tunnel. Ladder rack to hold: (2) PEL-35, PEL-28, PEL-24, PRL-20, PRL-16 and FL-10 (with rubber block feet and no handles).	1
HANDRAILS / STEPS		
3330-0002-050	Slide-out platform, rollerless. Includes chrome grab handle centered on the front face of the platform (includes hand rail as applicable). Located below driver side pump panel.	1
3330-0105-060	Dual lighted LED folding step. Location: officer side front compartment face. Each location requires a minimum of (1) handrail per NFPA.	3
3330-0105-062	Dual lighted LED folding step. Location: driver side front compartment face. Each location requires a minimum of (1) handrail per NFPA.	3
MISC BODY OPTIONS		
3090-0001	Hose bed capacity aerial. Provide standard size hose bed.	1
3090-0002	The unit has no overall height restrictions.	1
3090-0004	The unit has no overall length restrictions.	1
3340-0058	Recessed fuel fill driver side wheel well.	1

3340-0093	Mud flaps, rear, black with E-ONE logo.	1
3340-0107	Diamond plate tandem axle wheel well. Includes bolt-on composite wheel well liners and fenderettes.	1
3340-0270	The painted aerial body side panels shall be smooth / flush. Applies to SideStacker HB side, panels next to water tank on MM, and upper body sides on RLP.	1
SCBA BOTTLE STORAGE		
3320-0009	SCBA Bottle Storage. (8) Cast Product SCBA bottle storage with gasketed doors. (4) each side in rear wheel well area.	1
PUMPS		
4005-0016	Hale QMAX 1000-2250 GPM single stage pump.	1
4005-0031	Rating 1500 GPM.	1
PUMP CERTIFICATION		
4475-0000	Pump certification 750-2250 GPM	1
PUMP OPTIONS		
4015-0007	Pump cooler, 1/4" valve with 3/8" tubing.	1
4015-0008	Zinc anodes for Hale pump (PR), (1) discharge side and (1) intake side.	1
4015-0022	Mechanical pump seal - Hale.	1
4015-0052-198	Steamers to be Flush. Location: driver's side.	1
4015-0052-199	Steamers to be Flush. Location: officer's side.	1
4015-0073	Manual operated master pump drain. The master drain shall be clearly marked and placed in accessible location rearward below running board on driver side or L1 compartment.	1
INTAKES		
4440-0005	2.5" Left Intake Akron Manual Valve.	1
INTAKE OPTIONS		
4445-0009	Intake relief valve, Akron.	1
DISCHARGES AND PRECONNECTS		
4415-0012-654	1.5" crosslay with Akron manual valve. Location: crosslay 1 & 2.	2
4415-0034-583	3" Right Pump Panel Discharge Akron Manual Valve (Waterous pumps noted location to be forward lower port). Location: right side discharge 1.	1
4415-0058-655	2.5" Crosslay Akron Manual Valve. Location: crosslay 3.	1
4415-0161-581	2.5" Left Panel Discharge Akron Manual Valve w/30 Degree Droop. Location: left side discharge 1.	1
4415-0161-582	2.5" Left Panel Discharge Akron Manual Valve w/30 Degree Droop. Location: left side discharge 2.	1
4415-0164-584	2.5" Right Panel Discharge Akron Manual Valve w/30 Degree Droop. Location: right side discharge 2.	1
4415-0613	4" waterway discharge with 4" Akron electric valve.	1

DISCHARGE OPTIONS		
4417-0089-359	Lift lever quarter turn bleeder valve. Plumbed for use with: waterway discharge.	1
4417-0089-573	Lift lever quarter turn bleeder valve. Plumbed for use with: crosslay preconnect.	3
4417-0089-575	Lift lever quarter turn bleeder valve. Plumbed for use with: left discharge.	2
4417-0089-576	Lift lever quarter turn bleeder valve. Plumbed for use with: right discharge.	2
PRESSURE GOVERNORS		
4465-0011	Class 1 TPG pressure governor. Includes, water, oil, volt and tachometer.	1
GAUGES		
4435-0001	Class 1 Intelli-Tank water tank level gauge.	1
4435-0013	4.5" Class 1 compound pressure gauge (30-0-600 PSI).	2
4435-0015-352	2.5" Class 1 compound pressure gauge (30-0-600). Discharge(s): 1.5 in. crosslay preconnect.	2
4435-0015-353	2.5" Class 1 compound pressure gauge (30-0-600). Discharge(s): 2.5 in. crosslay preconnect.	1
4435-0015-359	2.5" Class 1 compound pressure gauge (30-0-600). Discharge(s): waterway discharge.	1
4435-0015-581	2.5" Class 1 compound pressure gauge (30-0-600). Discharge(s): left side discharge 1.	1
4435-0015-582	2.5" Class 1 compound pressure gauge (30-0-600). Discharge(s): left side discharge 2.	1
4435-0015-583	2.5" Class 1 compound pressure gauge (30-0-600). Discharge(s): right side discharge 1.	1
4435-0015-584	2.5" Class 1 compound pressure gauge (30-0-600). Discharge(s): right side discharge 2.	1
ELECTRICAL SYSTEMS		
5010-0013-E91	Vehicle data recorder - 2009 NFPA compliant. Includes occupant detection with display. Display location: Driver side of center dash electrical cover.	1
5010-0039	V-MUX Electrical system for aerials.	1
5010-0059-339	VFD Text display for V-MUX electrical system. Location: center of dash.	1
LIGHT BARS		
5300-0172	Whelen Mini-Freedom LED side facing front cab light bars (PR) model FT8RRRRF 24" with MKEZ7 mounts. All red LEDs with red lenses. For use on rear mount platforms with supplemental upper level Zone A warning lights. Locate one each side front cab corners side facing.	1
WARNING LIGHT PACKAGES		
5550-0059-538	Whelen Super LED lower level warning light package. Includes (8) red 600 LED light heads and (2) red 500 LED light heads w/chrome flanges. Locate side facing lights: at forward most position, in rear wheel well offset to front, and side facing at rear of body in rubrail if equipped.	1

WARNING LIGHTS		
5600-0078-290-06	Whelen Super LED beacon (PR) model L31H with Red domes. Location above L2/R2 compartments offset rearward to supplement upper rear warnings.	1
5600-0078-479-06	Whelen Super LED beacon (PR) model L31H with Red domes. Location rear upper body on aerial style brackets.	1
5600-0149-170	Hazard (door ajar) light, 2.5" incandescent. Location: center overhead.	1
SIRENS		
5500-0015	Whelen model 295SLSA1 siren with microphone (replaced 295HFSA1).	1
5500-0024-170	The electronic siren control is to be located on the center overhead.	1
SPEAKERS		
5510-0018-209	Whelen SA122FMP electronic siren speaker recessed in front bumper. Location: driver side front bumper.	1
DOT LIGHTING		
5150-0007	Whelen 600 series LED vertical mount tail lights. Includes LED stop/tail, arrow turn and halogen back-up lights with vertical Cast 3 housing and weatherproof connectors.	1
5150-0017	License plate light LED with chrome housing located at the rear of the body.	1
5150-0028	Marker light LED body/cab package. E-ONE custom cab with rear mount aerial platform bodies only. Includes (3) marker lights on front of platform.	1
DOT LIGHTING		
5150-0080-462	Weldon auxiliary turn signal model 9186-8580 LED (PR). Location: (1) each side in center of rear tandem wheel well.	1
LIGHTS - COMPARTMENT, STEP & GROUND		
5380-0029	Ground light package for cab and body - large.	1
5380-0033	Step light package body - small.	1
5380-0136	Compartment light package Amdor Luma-Bar LED for large bodies. Includes one light per compartment (two if transverse).	1
LIGHTS - DECK AND SCENE		
5390-0003	Hose bed light Truck-Lite. Locate at the front area of the hose bed. Switched with work light switch in cab.	1
5390-0007	Deck/scene light circuit wiring through chassis reverse. Requires rear deck or scene light.	1
5390-0022	Crosslay light Truck-Lite. Locate to rear of crosslay (SM) and forward of crosslay (TM as applicable). Switched with work light switch in cab.	1
5390-0048-446	Whelen 600 series gradient Super LED scene lights (PR) with weatherproof connectors. Switch in cab (driver and officer side lights switched separately). Locate (1) each side at rear below pike pole compts.	1
LIGHTS - NON-WARNING		
5400-0003	Engine compartment light (EA).	1

5400-0008	(1) pump panel light over the pump control area to be wired to come on when pump shift is placed in pump. (Side mount forward light noted, Top Mount is center light.)	1
5400-0010	Incandescent pump compartment light (EA).	1
5400-0039	Spotlight Specialty 2150 hand held located on officer's side of cab dash - hardwired.	1
5400-0047	Pump panel light package with (3) lights per side pump panel. Pump panels over 45" may require additional lights. Side mount only.	1
CONTROLS / SWITCHES		
5100-0000-199	Foot switch to control air horns located officer's side.	1
5100-0007-198	Foot switch to control electronic siren located driver's side.	1
CAMERAS / INTERCOM		
6570-0008	Intercom aerial 2-way. Atkinson Dynamics (Federal). Speaker to be located to rear of platform on Bronto units.	1
MISC ELECTRICAL		
1750-0082-762	12V power distribution module. Includes (6) battery hot and (6) switched hot circuits. 100 amps max (IATS). Location: behind officer's seat.	1
5110-0017	Back-up alarm 97 dB.	1
AERIAL MODEL		
6100-0018	Platform HP100 with SideStacker T/T. Includes left side roll top console, turntable mansaver bars and jack leg flood lights.	1
AERIAL HYDRAULIC SYSTEM OPTIONS		
6150-0003-216	Gauge aerial hydraulic oil level. Electronic display to be located on pump operator's panel.	1
MONITORS		
6300-0007	Monitor Akron electric 1250GPM for platform. Includes tip controls, base controls and butterfly valve.	1
6300-0017	Monitor painted silver from OEM.	1
AERIAL WARNING LIGHTS		
6550-0002	Outrigger warning lights (4) LED. Truck-Lite model 91R.	1
6550-0014	Whelen 600 Super LED red warning lights (4). Located down low across front of platform wired to upper level lights.	1
6550-0017-224-06	Whelen 600 Super LED Red LED warning lights on platform (PR). The lights shall be switched with aerial master and located one each side on the side of ground pad brackets.	1
AERIAL LIGHTING		
6560-0002-235	Spot light 12V located left side front of platform.	1
6560-0002-236	Spot light 12V located right side front of platform.	1

6560-0005	Flood lights Unity at base (PR).	1
WATERWAY OPTIONS		
6350-0005	Rear 4" NST waterway inlet for rear mounted aerials. Includes chrome cap.	1
6350-0006	2.5" Waterway Class 1 pressure gauge 30-0-600. Locate next to waterway inlet.	1
6350-0012-192	Akron 2.5" valve for platform. Valve to be located at the front of platform next to monitor.	1
6350-0014	2.5" chrome elbow with 2.5" x 1.5" reducer and 1.5" cap for platform / ladder discharge valve.	1
MISC AERIAL ELECTRICAL		
6570-0012	Aerial Information System (AIS) for platform.	1
BREATHING AIR		
6400-0003	Breathing air platform with (1) 444CF cylinder. Includes low air alarm.	1
SIGN PLATES		
6750-0004-000-39	Aerial sign plates 12 x 144 (PR). Available on HP78, HP100 and HP100 platform only. Does not include lettering. Color: Job Color.	1
AERIAL TESTING		
6900-0000	Aerial flow test - 3rd party.	1
6900-0002	Aerial 2009 NFPA Certification.	1
HAND TOOLS		
7600-0005	Pike Pole Fiberglass 6'.	2
7600-0006	Pike Pole Fiberglass 8'.	2
7600-0008	Pike Pole Fiberglass 12'	2
GROUND LADDERS		
7800-0002	Alco-Lite FL-10, 10' folding ladder without shoes.	1
7800-0010	Alco-Lite PRL-16' roof ladder.	1
7800-0016	Alco-Lite PEL-24' 2-section extension ladder.	1
7800-0021	Alco-Lite PEL-28' extension ladder.	1
7800-0024	Alco-Lite PEL-35' extension ladder.	2
7800-0038	Alco-Lite PRL-20' roof ladder.	1
MISC LOOSE EQUIPMENT		
7600-0016	Wheel chocks 44" NFPA complaint, pair (PR) of Zico SAC-44. Up to 44" diameter tires. Includes mounting brackets.	4
7900-0014	DOT Required Drive Away Kit - Kit includes three (3) triangular warning reflectors with carrying case. This kit is for the end user and is to remain with the truck.	1
EXTERIOR PAINT		
8100-0084	All applicable pump/pre-connect application modules are to have a job color finish.	1

	Includes upper and lower pump modules, crosswalk module and/or speedlay/pre-connect module (as applicable). Rear mounted body/pump module to be painted job color.		
8100-0116	Rear body surface to have a sanded finish (not painted job color). Includes hinged doors that do not have discrete sales codes and removable panels.	1	
8100-0176-000-17	Paint E-ONE chassis cab - Sikkens paint. Color: FLNA3225E-1 Red.	1	
8100-0183-000-17	Paint Body - Large - For Aerials, T/A Tankers/Wetsides, Rear Mounts and Rescues. Sikkens paint. Color: FLNA3225E-1 Red.	1	
8100-0356	Paint lift cylinders, extension cylinders and upper turntable steelwork FLNA4006 white (does not apply to TT deck).	1	
INTERIOR PAINT			
8150-0011	The interior of the cab to be painted Zolatone gray.	1	
STRIPING			
8200-0016	White reflective tape on (4) outriggers.	1	
8300-0002-334-12	NFPA Scotchlite Stripe - 4" wide and straight on front/sides of cab and sides/rear of body. Color: White. Location: bottom of stripe flush with top of bumper and straight back.	1	
8300-0042	White rubrail scotchlite insert.	1	
8300-0084-000-72	Chevron "A" style 6" printed sheet Scotchlite striping on rear of body. Includes rear facing extrusions, panels and doors inboard/outboard of the beavertails (if applicable). Colors to be Yellow/Red.	1	
GRAPHICS			
8400-0022	Logo E-ONE (PR) on aerial lift cylinder. Logo to be black and white reflective material approx 14" long located midway along outward surface of cylinder.	1	
WARRANTY / STANDARD & EXTENDED			
9100-0000	Standard 1 Year Warranty.	1	
9100-0003	Lifetime Frame Warranty.	1	
9100-0004	10 Year/100,000 Mile Structural Warranty - Statement of Warranty.	1	
9100-0005	10 Year Stainless Steel Plumbing Warranty - Statement of Warranty.	1	
9100-0007	20 Year Aerial Device Structural Warranty - Integrity Limited Warranty.	1	
9100-0019	10 Year Limited Paint and Perforation Warranty - For Sikkens Paint.	1	
SUPPORT, DELIVERY, INSPECTIONS AND MANUALS			
9300-0000	Vehicle familiarization aerial (Domestic).	1	
9300-0016	Approval Drawings-Standard.	1	
9300-0038	Manuals, operator, service and exploded view parts CD-ROM.	1	
PRICE	2013 E-ONE HP100P PLATFORM AERIAL LADDER QUINT - CYCLONE CUSTOM CHASSIS		$904,152.

STATE OF OHIO TERM SCHEDULE

4200 SURFACE RD
COLUMBUS, OH 43228

Quote No: 57494

3/8/2013

Quote Rev:14 Drawing Rev:3

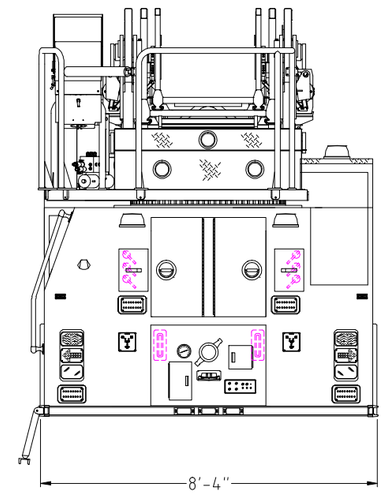

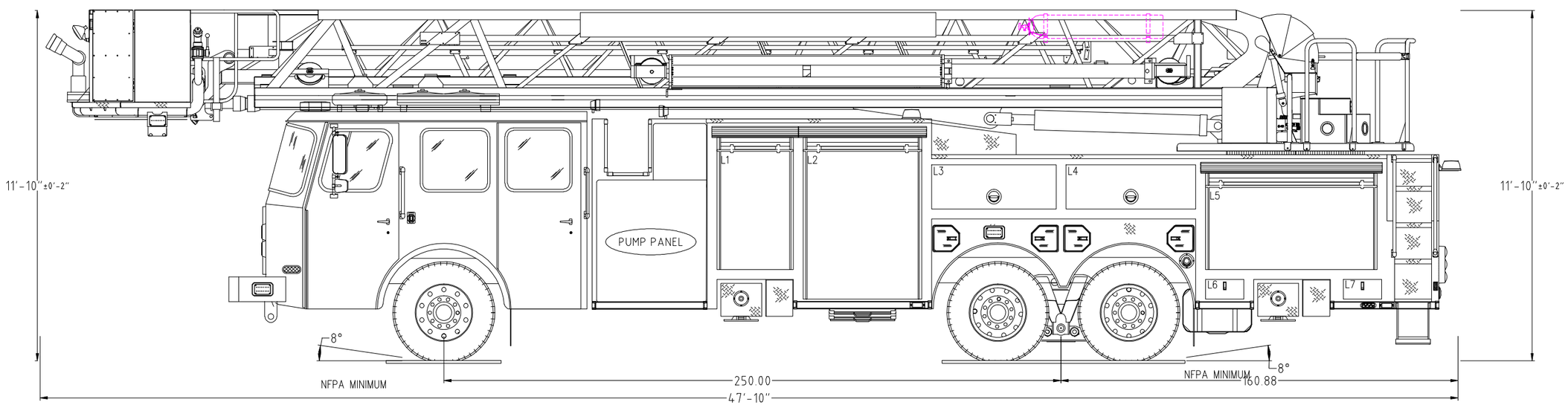

POWERED BY EZDRAW

Notice: This drawing provides a GENERAL REPRESENTATION of the vehicle configuration and should be used for evaluation purposes. The respective dimensions shown,including overall height and length, are estimates and may vary due to manufacturing processes. All other items such as lighting and fixtures, plumbing, compartmentation, and other generally assembled details are shown for REFERENCE ONLY and may not be a direct reflection of the final truck configuration. In ALL situations where this drawing may conflict with the specifications, THE SPECIFICATIONS, AS REFLECTED IN THE APPROVED SHOP ORDER, SHALL PREVAIL. Unless otherwise specified, the proposed apparatus will be manufactured to the latest NFPA recommendations as well as other applicable federally regulated safety regulations. E-One reserves the right to engineer and incorporate design improvements and changes without notice, while adhering to the intent of the specification.

1500 GPM HALE QMAXPUMP
0 TOTAL VOLUME
0 TOTAL FOAM

HOSE LOADS :

	OPENING		INTERIOR DIMENSIONS				
COMPT.	WIDTH	HEIGHT	WIDTH	LOWER HEIGHT	LOWER DEPTH	UPPER HEIGHT	UPPER DEPTH
L1	29	49	31	57	14	49	17
L2	46	61	48	69	25.5	61	17
L3	50.5	18	50.5	N/A	N/A	18	26
L4	52.5	18	52.5	N/A	N/A	18	20
L5	67.5	34.5	69.5	42.5	23	34.5	18
L6	15.5	8	15.5	8	23	N/A	N/A
L7	15	8	15	8	23	N/A	N/A
R1	29	49	31	57	14	49	16
R2	46	61	48	69	26	61	16
R3	15.5	32.5	15.5	30	23	N/A	N/A
R4	31	20.5	31	30	14	N/A	N/A
R5	36	32.5	36	30	23	N/A	N/A

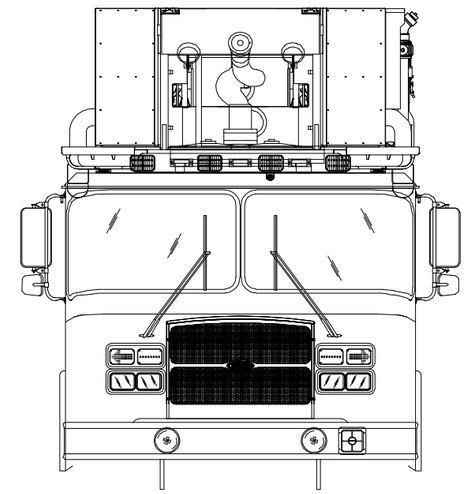

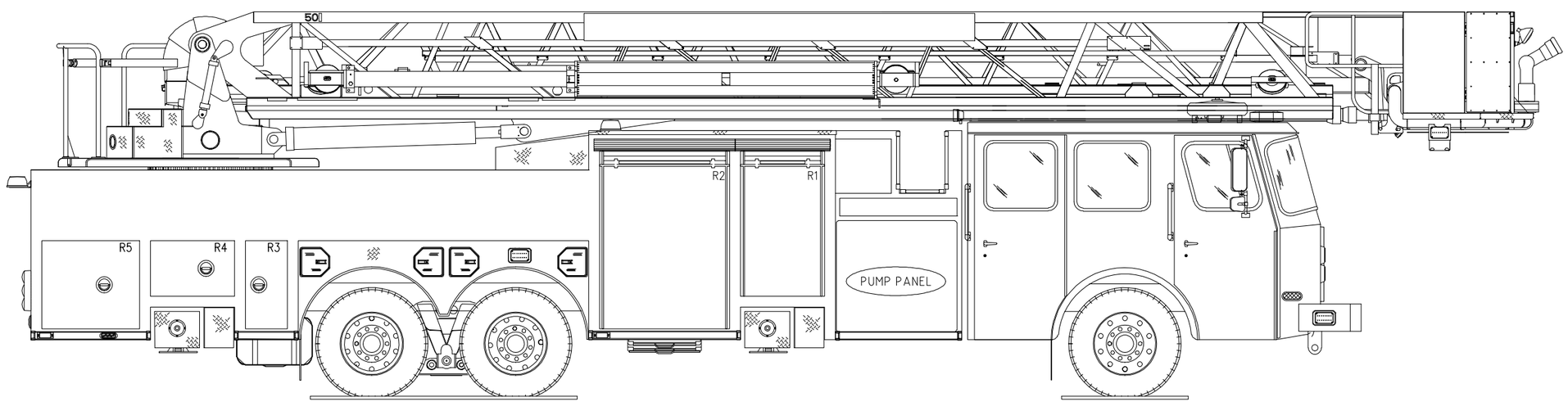

POWERED BY EZDRAW

Fire Apparatus Quotation for:
STATE OF OHIO TERM SCHEDULE

Quotation Number: 57495 Rev: 13

Unit Description: AEMM-CYC2-095P

Quote Description: Aerial Mid Mount, Cyclone II, 95 Platform

Salescode	Extended Description	Qty
TESTING COMPLIANCE STANDARD		
1001-0015	The E-ONE supplied components of the vehicle shall meet the requirements of NFPA 1901, 2009 edition.	1
BUMPERS		
1160-0000	Bumper 10" stainless steel.	1
1160-0010	1/8" Front Bumper Gravel Shield.	1
1160-0013	16" Front Bumper Gravel Shield Extension.	1
FRAME ASSEMBLY		
1250-0004	Frame - Torque box for HP95 Mid-Mount aerial.	1
AXLE OPTIONS		
1025-0024	Meritor RT-58-185 rear tandem axle 60,000 lb. capacity.	1
1025-0028	Koni shock absorbers for front axle - adjustable.	1
1025-0060	Meritor FL943 front axle 22,100lb	1
SUSPENSIONS		
1070-0030	Rear suspension FIREMAAX EX model FMX-622 air ride (60-62K) rated equal to the capacity of the axles. Requires alum wheels. (Raises OAH .5" over Raydan) (N/A on any TB aerial chassis except MM)	1
WHEEL OPTIONS		
1050-0007	Front axle wheel trim kit. Includes stainless steel lug nut covers (chrome plated plastic if applicable) and center cap with E-ONE logo. Note: Center cap will have an inspection port IPO a logo if equipped with Stemco oil seals.	1
1050-0009	Rear axle (tandem) wheel trim kit. Includes stainless steel lug nut covers (chrome plated plastic if applicable) and center caps with E-ONE logo. E-ONE custom chassis w/steel wheels will have chrome plated plastic lug covers.	1
1050-0044	Accuride aluminum wheels for front axle (2).	1
1050-0046	Accuride aluminum wheels for rear axles (8).	1

TIRE OPTIONS		
1060-0023	Eight Michelin 315 rear tires with Mud and Snow tread	1
1060-0046	Two Michelin 425 tires model XFE for front axle.	1
1060-0050	Tire pressure monitoring valve stem caps.	1
BRAKE SYSTEMS		
1100-0001	Meritor EX225H 17" disc brakes for front axle.	1
1100-0006	Parking brake release mounted on the driver's side lower dash.	1
1100-0008	Brake system air 6X4.	1
1100-0014	ArvinMeritor 16-1/2" x 7" S-cam brakes with cast brake drums for a tandem rear axle.	1
AIR SYSTEM OPTIONS		
1110-0000-001	Inlet for air system. Location: driver door jamb.	1
1110-0002	Air dryer Bendix AD-9.	1
1110-0006	Air lines nylon.	1
1110-0026	Air horns recessed in bumper (PR).	1
1110-0027	Isolated air tank. Includes pressure protection valve.	1
1110-0043	Auxiliary air tank to be plumbed to the following optional accessories (if equipped): Chassis air horns, brake system air outlet, air reel, light tower and or customer/dealer supplied pneumatic add-on(s).	1
ENGINES & TRANSMISSIONS		
1200-0017	Push-button transmission shift selector.	1
1200-0021	TransSynd synthetic transmission fluid for EVS 4000.	1
1200-0096	Electronically limited speed to 60 MPH.	1
1200-0239	Eng/Trans Cummins ISX12 500HP with EVS4000 transmission. 2013 EPA Compliant.	1
SECONDARY BRAKING		
1125-0002	Jacobs engine compression brake.	1
COOLING PACKAGE		
1800-0013	Cooling system for use with Cyclone II X, Typhoon X, and Quest chassis. For use with 2010/2013 EPA engines. Includes coolant recovery system.	1
FUEL SYSTEMS		
1350-0001	Dual fuel fill package. Additional fuel fill provided on officer side of unit.	1
1350-0005	Fuel system 65 gallons.	1
1350-0022	Fuel line hose rubber.	1
ALTERNATOR		
1700-0005	Alternator Leece Neville 320 amp. 320 amp SAE/275 amp NFPA.	1

BATTERIES		
1400-0002	Battery four group 31 1000 CCA.	1
CHASSIS OPTIONS		
1680-0005	Thermatic fan clutch.	1
1680-0007	Drivelines 1810. Required on 1550 lb/ft torque engines.	1
1680-0008	Tow eyes front painted below bumper/cab (PR).	1
1680-0012	Tow eyes rear frame painted.	1
1680-0017	Hotshift PTO.	1
1680-0188	Aerial hydraulics installed on bottom port of EVS4000 transmission (to allow for flat rear cab floor). For use on aerials without seperate PTO for hyd generator.	1
1680-0250-M58	Diesel Exhaust Fluid (DEF) 5 gallon tank for 2013 EPA engines. Location: left side below rear of cab.	1
CAB MODEL		
1520-0008	Cyclone II X medium cab with 58" CA	1
CAB ROOF TYPE		
1615-0010	Cab roof to be "flat" (non-vista).	1
CAB BADGE PACKAGE		
1610-0000	Cab and body to have applicable E-ONE logos.	1
CAB DOOR OPTIONS		
1550-0003	Rear crew cab doors in the medium position.	1
1550-0005	Driver and officer cab door windows. Include forward vent windows.	1
1550-0011	Rear crew cab door windows. Includes manual roll-down actuation. Not available with paddle style door latching.	1
1550-0016	Cab door panels ABS.	1
1550-0025	All cab doors shall have "L" style exterior latches.	1
1550-0027	Front cab door windows to manually roll down.	1
1550-0037-659	(4) Incandescent cab step area lighting. Locate each light in on each cab door in the inboard position. Lights to be switched with door ajar.	1
1550-0044	All cab door kick plates to be made from diamond plate aluminum.	1
1550-0059-000-72	Reflective Yellow/Red printed striping positioned in the "A" formation located in the lower cab door panels.	1
1550-0077	Interior cab door locks - manual. Will be individually actuated from each respective door. Includes barrel style key lock on each exterior cab door.	1
1550-0084	All cab exterior access doors to have 1250 keyed locks.	1
MIRRORS		
1670-0003	Velvac 2010 mirrors. Door mounted west coast style with remote control and heat.	1
MISC EXTERIOR CAB OPTIONS		

1550-0020	Windows cab side fixed driver's side.	1
1550-0033	Windows cab side fixed officer's side.	1
1675-0022	Pair of 18" handrails located just behind driver and officer front door one each side.	1
1675-0024	Pair of 36" handrails located just behind driver and officer rear door (ALS doors if equipped) one each side.	1
1675-0030	Mud flaps, front, black with E-ONE logo.	1
1675-0047	Rear cab wall to be 3/16" aluminum diamond plate.	1
HVAC		
1515-0018	Air conditioning for the CII X and Quest with Cummins ISM, ISX or Detroit Diesel Series 60 engine, roof top mounted condenser.	1
1685-0057	Heaters rear with covers (PR), and front heater with heat to the feet for the driver and officer.	1
SEATS		
1510-0003	Seats, Inc. brand 911 cab seats.	1
1510-0007	Seat cover material vinyl.	1
1510-0008	Seat color gray.	1
1510-0035-147	Universal air pack bottle bracket (EA). Location: officer's seat.	1
1510-0035-148	Universal air pack bottle bracket (EA). Location: rear facing driver's side.	1
1510-0035-151	Universal air pack bottle bracket (EA). Location: inboard driver's side rear wall.	1
1510-0035-152	Universal air pack bottle bracket (EA). Location: inboard officer's side rear wall.	1
1510-0035-215	Universal air pack bottle bracket (EA). Location: rear facing officer's side.	1
1510-0038	Driver seat 911 air ride.	1
1510-0042	Officer seat to be 911 fixed SCBA.	1
1510-0050	Rear facing 911 seat with SCBA driver's side.	1
1510-0053	Rear facing 911 seat with SCBA officer's side.	1
1510-0062	Two man bench centered on rear wall with 911 SCBA backs.	1
1685-0033	Seating capacity tag of six occupants.	1
MISC INTERIOR CAB OPTIONS		
1685-0000	Cab interior gray. Does not include engine cover or seat color.	1
1685-0005	Lexan sun visors, driver and officer's side overhead.	1
1685-0168	ABS Dash package. Includes center and officer side dash, lower kick panels and "A" post covers.	1
1685-0187	Severe duty engine cover, molded polyurethane.	1
CAB ELECTRICAL OPTIONS		
1750-0013-172	Turn signal Whelen 600 LED amber arrow pair located upper headlight bezel.	1
1750-0029	Switch horn button two position DOT/air horn.	1
1750-0046-195	Cab Headlights. Position: lower.	1

1750-0059-179-04	Receptacle inlet 20 amp with a Yellow cover. Location: outside driver's door next to handrail.	1
1750-0072-593	12 VDC (or 24VDC) electrical outlet in the cab wired battery hot. Location: officer side dash.	2
1750-0075	English dominant main cab gauge cluster.	1
1750-0188	DPF regeneration override switch.	1
1750-0198-A31	Battery charger to be located behind driver's seat.	1
1750-0343	Battery charger E-ONE LPC 20. 120 volt inlet, 20 amp output.	1
5400-0037	Dome Lts Red/White Incandescent. Package includes two lights mounted in the front and two mounted in the rear of the cab. White light wire through door and light assembly mounted switch. Red light through light assembly mounted switch.	1
BODY MODEL		
3080-0034	HP95 MidMount center body with pump and 300g tank.	1
3080-0041	HP95 MidMount rear body with hosebed.	1
3080-0147	HP95 MidMount front body with pump (for use with DPF / SCR aftertreatment).	1
BODY COMPT REAR		
3110-0058	Rear of body to have flush un-painted smooth plate body panels to facilitate rear body striping.	1
AERIAL BODY OPTIONS		
3310-0018	Auxiliary jack pads 24X24 (4). Includes pads with side mounted handle and mounting brackets to store (2) each side of the body next to front drop down jacks.	1
3310-0032	Recessed tubes for (6) pike poles. Not available on HP75 SideStacker.	1
3310-0037	Rear ladder tunnel doors. Vertically hinged diamond plate.	1
3310-0058	Crosslay triple 5.5" wide single stack to hold up to (2) 200' of 2.0" DJ (each) and up to 200' 2.5" DJ.	1
3310-0161	Jack leg opening covers diamond plate (2) sets. Includes diamond plate outrigger covers and fixed diamond plate filler panels.	1
DOORS		
3300-0007-003	Door single vertically hinged painted. Location(s): L1	1
3300-0007-004	Door single vertically hinged painted. Location(s): L2	1
3300-0007-015	Door single vertically hinged painted. Location(s): R1	1
3300-0007-016	Door single vertically hinged painted. Location(s): R2	1
3300-0007-018	Door single vertically hinged painted. Location(s): R4	1
3300-0011-005	Door single horizontally hinged lift-up painted. Location(s): L3	1
3300-0164-007	Door double vertically hinged w/rotary latches - painted . Location(s): L5	1
3300-0164-017	Door double vertically hinged w/rotary latches - painted . Location(s): R3	1
3300-0164-019	Door double vertically hinged w/rotary latches - painted . Location(s): R5	1
3300-0167-006	Door double 3-point vertically hinged w/rotary latches - painted. Location(s): L4	1

COVERS		
3305-0007-000-02	Vinyl Red hose bed cover with attached rear flap(s).	1
3305-0008-000-02	Vinyl Red crosslay cover with attached side flaps.	1
PUMP PANELS		
3134-0012	Officer side upper pump access panel to be horizontally hinged with diamond plate door. Includes (2) push button latches and (2) hold open devices.	1
3134-0016	Stainless steel driver and officer side pump panels.	1
3134-0039	The gauge panel on the driver side pump panel is to be hinged upward. Includes two spring type hold opens, two trigger latches, and a recessed handle.	1
MISC PUMP PANEL OPTIONS		
4460-0003	Pump panel tags color coded per NFPA compliance.	1
WATER TANK		
4010-0195	300 gallon "T" water tank. UPF Poly III blue fill tower.	1
TANK PLUMBING		
4450-0010	2" tank fill Akron manual valve.	1
4450-0023	3" Tank to Pump Akron Air Actuated Valve	1
LADDER STORAGE / RACKS		
3365-0036-603	Center mounted ladder tunnel. Ladder rack to hold: PEL3-35, PEL-24, (2)PRL-16, PRL-14 and FL-10.	1
HANDRAILS / STEPS		
3330-0002-050	Slide-out platform, rollerless. Includes chrome grab handle centered on the front face of the platform (includes hand rail as applicable). Located below driver side pump panel.	1
MISC BODY OPTIONS		
3090-0001	Hose bed capacity aerial. Provide standard size hose bed.	1
3090-0002	The unit has no overall height restrictions.	1
3090-0004	The unit has no overall length restrictions.	1
3340-0059	Recessed Fuel fills for dual fuel fill application. (1) each side in wheel well.	1
3340-0093	Mud flaps, rear, black with E-ONE logo.	1
3340-0107	Diamond plate tandem axle wheel well. Includes bolt-on composite wheel well liners and fenderettes.	1
3340-0270	The painted aerial body side panels shall be smooth / flush. Applies to SideStacker HB side, panels next to water tank on MM, and upper body sides on RLP.	1
3340-0478	Insulation to protect compartment from exhaust system heat. Locate below center transverse floor, right side transverse floor and lower R1 back wall.	1
SCBA BOTTLE STORAGE		
3320-0009	SCBA Bottle Storage. (8) Cast Product SCBA bottle storage with gasketed doors. (4)	1

	each side in rear wheel well area.	
PUMPS		
4005-0012	Hale 8FGR 1500-2000 GPM Pump single stage	1
4005-0033	Rating 2000 GPM	1
PUMP CERTIFICATION		
4475-0000	Pump certification 750-2250 GPM	1
PUMP OPTIONS		
4015-0007	Pump cooler, 1/4" valve with 3/8" tubing.	1
4015-0008	Zinc anodes for Hale pump (PR), (1) discharge side and (1) intake side.	1
4015-0052-198	Steamers to be Flush. Location: driver's side.	1
4015-0052-199	Steamers to be Flush. Location: officer's side.	1
4015-0073	Manual operated master pump drain. The master drain shall be clearly marked and placed in accessible location rearward below running board on driver side or L1 compartment.	1
INTAKES		
4440-0005	2.5" Left Intake Akron Manual Valve.	1
INTAKE OPTIONS		
4445-0009	Intake relief valve, Akron.	1
DISCHARGES AND PRECONNECTS		
4415-0012-654	1.5" crosslay with Akron manual valve. Location: crosslay 1 & 2.	2
4415-0014-581	2.5" Left Pump Panel Discharge Akron Manual Valve. Location: left side discharge 1.	1
4415-0014-582	2.5" Left Pump Panel Discharge Akron Manual Valve. Location: left side discharge 2.	1
4415-0016-584	2.5" Right Pump Panel Discharge Akron Manual Valve. Location: right side discharge 2.	1
4415-0058-655	2.5" Crosslay Akron Manual Valve. Location: crosslay 3.	1
4415-0587-583	3" Right Pump Panel Discharge Akron Electric Valve. Location: right side discharge 1.	1
4415-0613	4" waterway discharge with 4" Akron electric valve.	1
DISCHARGE OPTIONS		
4417-0089-359	Lift lever quarter turn bleeder valve. Plumbed for use with: waterway discharge.	1
4417-0089-573	Lift lever quarter turn bleeder valve. Plumbed for use with: crosslay preconnect.	3
4417-0089-575	Lift lever quarter turn bleeder valve. Plumbed for use with: left discharge.	2
4417-0089-576	Lift lever quarter turn bleeder valve. Plumbed for use with: right discharge.	2
PRESSURE GOVERNORS		
4465-0011	Class 1 TPG pressure governor. Includes, water, oil, volt and tachometer.	1

GAUGES		
4435-0001	Class 1 Intelli-Tank water tank level gauge.	1
4435-0013	4.5" Class 1 compound pressure gauge (30-0-600 PSI).	2
4435-0015-352	2.5" Class 1 compound pressure gauge (30-0-600). Discharge(s): 1.5 in. crosslay preconnect.	2
4435-0015-353	2.5" Class 1 compound pressure gauge (30-0-600). Discharge(s): 2.5 in. crosslay preconnect.	1
4435-0015-359	2.5" Class 1 compound pressure gauge (30-0-600). Discharge(s): waterway discharge.	1
4435-0015-581	2.5" Class 1 compound pressure gauge (30-0-600). Discharge(s): left side discharge 1.	1
4435-0015-582	2.5" Class 1 compound pressure gauge (30-0-600). Discharge(s): left side discharge 2.	1
4435-0015-583	2.5" Class 1 compound pressure gauge (30-0-600). Discharge(s): right side discharge 1.	1
4435-0015-584	2.5" Class 1 compound pressure gauge (30-0-600). Discharge(s): right side discharge 2.	1
ELECTRICAL SYSTEMS		
5010-0013-E91	Vehicle data recorder - 2009 NFPA compliant. Includes occupant detection with display. Display location: Driver side of center dash electrical cover.	1
5010-0039	V-MUX Electrical system for aerials.	1
5010-0059-339	VFD Text display for V-MUX electrical system. Location: center of dash.	1
LIGHT BARS		
5300-0055	Light bar Whelen Freedom model FN72QLED 72" LED with MKEZ7 mounts and clear lenses. Location: Centered on the front cab roof.	1
WARNING LIGHT PACKAGES		
5550-0059-538	Whelen Super LED lower level warning light package. Includes (8) red 600 LED light heads and (2) red 500 LED light heads w/chrome flanges. Locate side facing lights: at forward most position, in rear wheel well offset to front, and side facing at rear of body in rubrail if equipped.	1
WARNING LIGHTS		
5600-0078-479-06	Whelen Super LED beacon (PR) model L31H with Red domes. Location rear upper body on aerial style brackets.	1
5600-0149-170	Hazard (door ajar) light, 2.5" incandescent. Location: center overhead.	1
SIRENS		
5500-0015	Whelen model 295SLSA1 siren with microphone (replaced 295HFSA1).	1
5500-0024-170	The electronic siren control is to be located on the center overhead.	1
SPEAKERS		
5510-0018-209	Whelen SA122FMP electronic siren speaker recessed in front bumper. Location:	1

	driver side front bumper.	
DOT LIGHTING		
5150-0006	Whelen 600 series LED horizontal mount tail lights. Includes LED stop/tail, arrow turn and halogen back-up lights with horizontal Cast 3 housing and weatherproof connectors.	1
5150-0017	License plate light LED with chrome housing located at the rear of the body.	1
5150-0026	Marker light LED body/cab package. E-ONE custom cab with aerial ladder, Mid-Mount platform or Bronto bodies only.	1
5150-0039	Marker lights Britax amber/red rubber housed mounted on the rear body corners angled down.	1
5150-0080-462	Weldon auxiliary turn signal model 9186-8580 LED (PR). Location: (1) each side in center of rear tandem wheel well.	1
LIGHTS - COMPARTMENT, STEP & GROUND		
5380-0029	Ground light package for cab and body - large.	1
5380-0033	Step light package body - small.	1
5380-0136	Compartment light package Amdor Luma-Bar LED for large bodies. Includes one light per compartment (two if transverse).	1
LIGHTS - DECK AND SCENE		
5390-0000-457	Deck light - Unity 12 volt (PR). Location: (1) on each side up high rear of body.	1
5390-0003	Hose bed light Truck-Lite. Locate at the front area of the hose bed. Switched with work light switch in cab.	1
5390-0004	Crosslay lights Weldon. Locate on each side at rear of crosslay (SM) or forward of crosslay (TM) approx. 16" from side of body.	1
LIGHTS - NON-WARNING		
5400-0003	Engine compartment light (EA).	1
5400-0008	(1) pump panel light over the pump control area to be wired to come on when pump shift is placed in pump. (Side mount forward light noted, Top Mount is center light.)	1
5400-0010	Incandescent pump compartment light (EA).	1
5400-0039	Spotlight Specialty 2150 hand held located on officer's side of cab dash - hardwired.	1
5400-0049	Pump panel light package - RLP/MM. Includes (2) lights per side pump panel and (2) lights for angled upper control panel.	1
CONTROLS / SWITCHES		
5100-0000-199	Foot switch to control air horns located officer's side.	1
5100-0007-198	Foot switch to control electronic siren located driver's side.	1
CAMERAS / INTERCOM		
6570-0008	Intercom aerial 2-way. Atkinson Dynamics (Federal). Speaker to be located to rear of platform on Bronto units.	1

MISC ELECTRICAL		
1750-0082-762	12V power distribution module. Includes (6) battery hot and (6) switched hot circuits. 100 amps max (IATS). Location: behind officer's seat.	1
5110-0017	Back-up alarm 97 dB.	1
AERIAL MODEL		
6100-0008	Platform HP95 Mid-Mount. Includes driver side roll top console, level assist and jack leg flood lights.	1
AERIAL HYDRAULIC SYSTEM OPTIONS		
6150-0003-216	Gauge aerial hydraulic oil level. Electronic display to be located on pump operator's panel.	1
MONITORS		
6300-0007	Monitor Akron electric 1250GPM for platform. Includes tip controls, base controls and butterfly valve.	1
6300-0017	Monitor painted silver from OEM.	1
AERIAL WARNING LIGHTS		
6550-0001	Outrigger warning lights (PR) LED. Truck-Lite model 91R.	1
AERIAL LIGHTING		
6560-0002-237	Spot light 12V located center front of platform.	1
6560-0005	Flood lights Unity at base (PR).	1
WATERWAY OPTIONS		
6350-0006	2.5" Waterway Class 1 pressure gauge 30-0-600. Locate next to waterway inlet.	1
6350-0009	Right side 4" NST waterway inlet for Mid-Mount Boom or Platform. Includes chrome cap.	1
6350-0012-192	Akron 2.5" valve for platform. Valve to be located at the front of platform next to monitor.	1
6350-0014	2.5" chrome elbow with 2.5" x 1.5" reducer and 1.5" cap for platform / ladder discharge valve.	1
MISC AERIAL ELECTRICAL		
6570-0012	Aerial Information System (AIS) for platform.	1
BREATHING AIR		
6400-0003	Breathing air platform with (1) 444CF cylinder. Includes low air alarm.	1
AERIAL EQUIPMENT		
6500-0011-138	Pike pole tube for 6' pole on ladder. Location: left side fly section.	1
6500-0019-266	Axe bracket mounted on aerial. For use with a 6 lb. axe only. Location: right side inside of platform.	1
SIGN PLATES		
6750-0001-000-39	Aerial sign plates 16 x 144 (PR). Available on HP95, HP100L and HP100P only. Does	1

	not include lettering. Color: Job Color	
AERIAL TESTING		
6900-0000	Aerial flow test - 3rd party.	1
6900-0002	Aerial 2009 NFPA Certification.	1
HAND TOOLS		
7600-0005	Pike Pole Fiberglass 6'.	2
7600-0006	Pike Pole Fiberglass 8'.	2
7600-0008	Pike Pole Fiberglass 12'	2
GROUND LADDERS		
7800-0007	Alco-Lite PRL-14' roof ladder.	1
7800-0010	Alco-Lite PRL-16' roof ladder.	2
7800-0016	Alco-Lite PEL-24' 2-section extension ladder.	1
7800-0023	Alco-Lite PEL3-35' 3-section extension ladder.	1
7800-0032	Alco-Lite FL-10, 10' folding ladder w/safety shoes.	1
MISC LOOSE EQUIPMENT		
7600-0016	Wheel chocks 44" NFPA complaint, pair (PR) of Zico SAC-44. Up to 44" diameter tires. Includes mounting brackets.	4
7900-0014	DOT Required Drive Away Kit - Kit includes three (3) triangular warning reflectors with carrying case. This kit is for the end user and is to remain with the truck.	1
EXTERIOR PAINT		
8100-0116	Rear body surface to have a sanded finish (not painted job color). Includes hinged doors that do not have discrete sales codes and removable panels.	1
8100-0176-000-17	Paint E-ONE chassis cab - Sikkens paint. Color: FLNA3225E-1 Red.	1
8100-0183-000-17	Paint Body - Large - For Aerials, T/A Tankers/Wetsides, Rear Mounts and Rescues. Sikkens paint. Color: FLNA3225E-1 Red.	1
8100-0356	Paint lift cylinders, extension cylinders and upper turntable steelwork FLNA4006 white (does not apply to TT deck).	1
INTERIOR PAINT		
8150-0011	The interior of the cab to be painted Zolatone gray.	1
STRIPING		
8200-0015	White reflective tape on (2) outriggers.	1
8300-0002-334-12	NFPA Scotchlite Stripe - 4" wide and straight on front/sides of cab and sides/rear of body. Color: White. Location: bottom of stripe flush with top of bumper and straight back.	1
8300-0042	White rubrail scotchlite insert.	1
8300-0084-000-72	Chevron "A" style 6" printed sheet Scotchlite striping on rear of body. Includes rear facing extrusions, panels and doors inboard/outboard of the beavertails (if applicable). Colors to be Yellow/Red.	1

GRAPHICS		
8400-0022	Logo E-ONE (PR) on aerial lift cylinder. Logo to be black and white reflective material approx 14" long located midway along outward surface of cylinder.	1
WARRANTY / STANDARD & EXTENDED		
9100-0000	Standard 1 Year Warranty.	1
9100-0003	Lifetime Frame Warranty.	1
9100-0004	10 Year/100,000 Mile Structural Warranty - Statement of Warranty.	1
9100-0005	10 Year Stainless Steel Plumbing Warranty - Statement of Warranty.	1
9100-0007	20 Year Aerial Device Structural Warranty - Integrity Limited Warranty.	1
9100-0019	10 Year Limited Paint and Perforation Warranty - For Sikkens Paint.	1
SUPPORT, DELIVERY, INSPECTIONS AND MANUALS		
9300-0000	Vehicle familiarization aerial (Domestic).	1
9300-0009	Manuals, Operator and Service CD-ROM.	1
9300-0016	Approval Drawings-Standard.	1
PRICE	2013 E-ONE MM95P MIDMOUNT PLATFORM AERIAL LADDER QUINT - CYCLONE CUSTOM CHASSIS	$921,857.

STATE OF OHIO TERM SCHEDULE

4200 SURFACE RD
COLUMBUS, OH 43228

Quote No: 57495

3/8/2013

Quote Rev:13 Drawing Rev:3

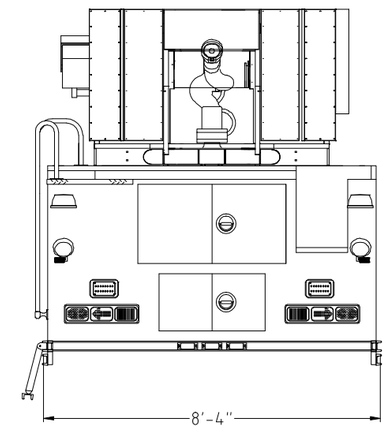

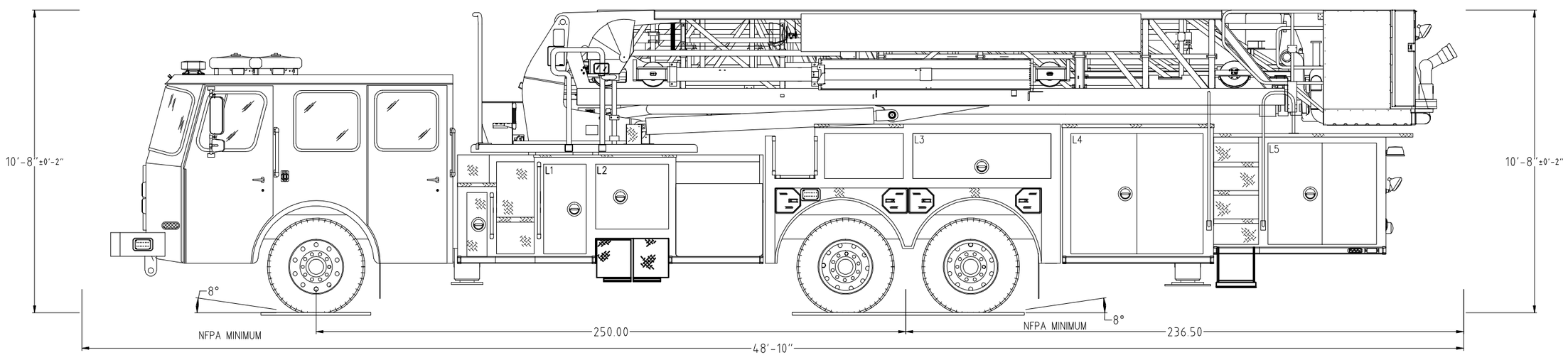

POWERED BY EZDRAW

Notice: This drawing provides a GENERAL REPRESENTATION of the vehicle configuration and should be used for evaluation purposes. The respective dimensions shown,including overall height and length, are estimates and may vary due to manufacturing processes. All other items such as lighting and fixtures, plumbing, compartmentation, and other generally assembled details are shown for REFERENCE ONLY and may not be a direct reflection of the final truck configuration. In ALL situations where this drawing may conflict with the specifications, THE SPECIFICATIONS, AS REFLECTED IN THE APPROVED SHOP ORDER, SHALL PREVAIL. Unless otherwise specified, the proposed apparatus will be manufactured to the latest NFPA recommendations as well as other applicable federally regulated safety regulations. E-One reserves the right to engineer and incorporate design improvements and changes without notice, while adhering to the intent of the specification.

	HOSE LOADS :
2000 GPM PUMP 0 TOTAL VOLUME 0 TOTAL FOAM	

	OPENING		INTERIOR DIMENSIONS				
COMPT.	WIDTH	HEIGHT	WIDTH	LOWER HEIGHT	LOWER DEPTH	UPPER HEIGHT	UPPER DEPTH
L1	18	38	18	N/A	N/A	N/A	N/A
L2	31	27.5	31	N/A	N/A	27.5	3
L3	58.5	19	58.5	N/A	N/A	19	25
L4	56	51	56	30	26	21	22
L5	46	43	46	30	26	13	22
R1	18	38	18	N/A	N/A	38	20
R2	31	27.5	31	N/A	N/A	27.5	3
R3	56	28.13	56	30	26	-1.87	21
R4	19	24	19	30	26	-6	21
R5	46	24	46	30	26	-6	21

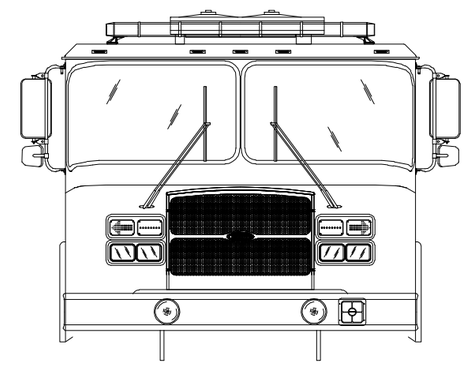

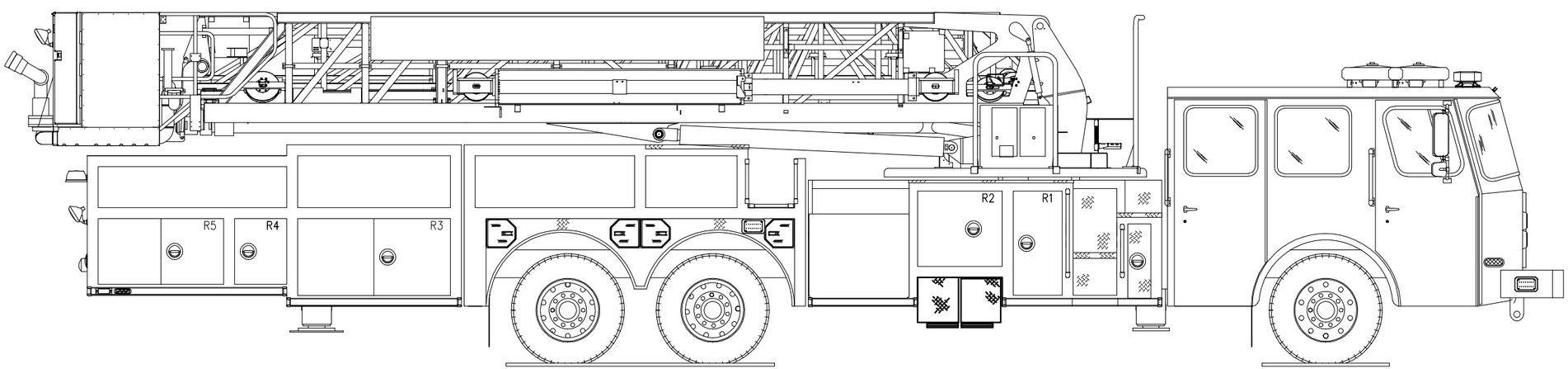

POWERED BY EZDRAW

E-ONE OHIO STATE TERM SCHEDULE 2013 OPTIONS PRICE BOOK

MAINLINE AERIALS - CUSTOM CHASSIS

1000	Chassis	
1025-0002	Dana 22I 22,800lb front axle.	$17,422
1025-0004	Meritor FL941 front axle 18,000 lb.	$10,529
1025-0005	Meritor FL941 front axle 18,700 lb.	$15,791
1025-0006	Meritor FL941 front axle 20,000 lbs.	$16,362
1025-0007	Meritor FL941 front axle 21,000lb	$16,362
1025-0009	Meritor FL943 front axle 18,000 lbs.	$12,816
1025-0010	Meritor FL943 front axle 18,700 lb.	$16,591
1025-0011	Meritor FL943 front axle 20,000 lb.	$17,278
1025-0012	Meritor FL-943 front axle 21,000 lb.	$17,505
1025-0013	Meritor FL943 front axle 21,500 lbs.	$17,849
1025-0018	Meritor RS-30-185 single rear axle 31,000 lb. capacity.	$13,160
1025-0019	Meritor RT-40-145 rear tandem axle 40,000 lb. capacity.	$24,027
1025-0020	Meritor RT-46-160 rear tandem axle 46,000 lb. capacity.	$28,032
1025-0021	Meritor RT-46-160 rear tandem axle 48,000 lb. capacity.	$28,032
1025-0022	Meritor RT-50-160 rear tandem axle 52,000 lb. capacity.	$35,468
1025-0023	Meritor RT-50-160 rear tandem axle 54,000 lb. capacity.	$35,468
1025-0024	Meritor RT-58-185 rear tandem axle 60,000 lb. capacity.	$44,621
1025-0027	Driver controlled rear differential.	$751
1025-0028	Koni shock absorbers for front axle - adjustable.	$326
1025-0029	Front shock absorbers.	$175
1025-0030	Stemco oil seal front axle. Chicago Rawhide seal with Stemco sight glass will be supplied when front disc brakes are selected.	$106
1025-0031	Spiral pins front suspension.	$1,630
1025-0034	Automatic traction control. In addition to standard ABS system.	$563
1025-0035	Koni shock absorbers for rear axle.	$517
1025-0036	Automatic Traction Control System 6x4/6x6	$1,920
1025-0038	Meritor RT-58-185 rear tandem axle 62,000lb capacity.	$52,630
1025-0060	Meritor FL943 front axle 22,100lb	$18,520
1025-0064	Independent front axle/suspension - 18,000 lb.	$40,262
1025-0065	Independent front axle/suspension - 20,000 lb.	$40,262
1025-0066	Independent front axle/suspension - 22,800 lb.	$40,262
1025-0067	Independent front axle/suspension - 24,000 lb.	$40,262
1025-0073	Meritor RS-30-185 single rear axle 31,500 lb. capacity.	$13,160
1025-0074	Independent front axle/suspension rated at 18,700 lb due to tires (Uses 20,000 lb springs).	$40,262
1025-0075	Independent front axle/suspension rated at 21,000 lb due to tires (Uses 22,800 lb springs).	$40,262
1025-0076	Independent front axle/suspension rated at 21,500 lb due to tires (Uses 22,800 lb springs).	$40,262
1025-0078	S-Cam brakes to have Haldex brand slack adjusters (per axle).	$297
1025-0081	Chicago Rawhide oil seal rear axle (per axle). Not available with disc brakes.	$225
1025-0086	Meritor FL941 front axle 18,500lb.	$15,791
1025-0087	Dana S35-590 single rear axle 32,500lb capacity. Requires Bendix rear brakes.	$16,742
1025-0088	Synthetic 75w90 gear oil for rear axle.	$357
1025-0090	Meritor RT-46-160 rear tandem axle rated at 40,000lb capacity.	$28,032
1025-0097	Meritor RS-30-185 single rear axle 33,000 lb. capacity. Requires 16.5" x 8.625" cast shoe brakes and 33K suspension.	$13,160
1025-0107	Synthetic 75w90 gear oil for front axle.	$110
1025-0110	Meritor RT-50-160 rear tandem axle 50,000lb capacity	$35,468
1025-0114	Meritor FL943 front axle 18,700lb with multi-leaf front springs.	$16,981
1025-0119	3 year extended parts and labor warranty (total of 4 year warranty) on Timoney Independant Front Axle. Does not include steering components.	$2,367
1025-0120	Driver controlled rear differential. Includes guarded toggle switch located on driver side diagnostic panel.	$751
1025-0121	2 year extended parts and labor warranty (total of 3 year warranty) on Timoney Independent Suspension Front Axle. Does not include steering components.	$1,579
1025-0124	Meritor FL943 front axle 20,000 lb. Springs to have Berlin style eyes with rubber bushings.	$17,570
1025-0127	Meritor FL941 front axle 18,000 lb with multi-leaf front springs.	$10,911
1025-0132	Koni shock absorbers for front axle - non-adjustable. For use with IFS front axle only.	$326
1025-0133	Meritor FL943 front axle 20,000 lb with multi-leaf front springs.	$17,660
1025-0134	Meritor MT-40-14X rear tandem axle 40,000 lb. capacity.	$24,027
1050-0000	Steel wheels for front axle (2).	$308
1050-0001	Alcoa aluminum wheels for front axle (2).	$1,664
1050-0002	Steel wheels for rear axle (4).	$611
1050-0003	Alcoa aluminum wheels for rear axle (4).	$3,323
1050-0004	Steel wheels for rear axles (8).	$1,220
1050-0005	Alcoa aluminum wheels for rear axles (8).	$6,642

1050-0007	Front axle wheel trim kit. Includes stainless steel lug nut covers (chrome plated plastic if applicable) and center cap with E-ONE logo. Note: Center cap will have an inspection port IPO a logo if equipped with Stemco oil seals.	$222
1050-0008	Rear axle (single) wheel trim kit. Includes stainless steel lug nut covers (chrome plated plastic if applicable) and center cap with E-ONE logo. E-ONE custom chassis w/steel wheels will have chrome plated plastic lug covers.	$273
1050-0009	Rear axle (tandem) wheel trim kit. Includes stainless steel lug nut covers (chrome plated plastic if applicable) and center caps with E-ONE logo. E-ONE custom chassis w/steel wheels will have chrome plated plastic lug covers.	$611
1050-0017	Each inside wheel of the single rear axle shall have valve stem extensions.	$112
1050-0018	Each inside wheel of the tandem rear axles shall have valve stem extensions.	$220
1050-0019	Two steel wheels painted job color on both the inside and outside facing for front axle.	$591
1050-0026	Front axle Wheel Trim kit. Includes stainless steel lug nut covers and center cap (no logo). Note: Center cap will have an inspection port if equipped with Stemco oil seals.	$222
1050-0027	Rear axle (single) wheel trim kit. Includes stainless steel lug nut covers (chrome plated plastic if applicable) and center caps (no logo). E-ONE custom chassis w/ steel wheels will have chrome plated plastic lug covers.	$273
1050-0028	Rear axle (tandem) Wheel Trim kit. Includes stainless steel lug nut covers (chrome plated plastic if applicable) and center cap (No logo). E-ONE custom chassis w/ steel wheels will have chrome plated plastic lug covers.	$611
1050-0031	Front axle wheel simulator kit. Includes stainless steel wheel simulator and center cap with E-ONE logo. Note: Center cap will have an inspection port IPO a logo if equipped with Stemco oil seals.	$535
1050-0032	Rear axle (single) wheel simulator kit. Includes full stainless steel wheel simulators with integrated lug nut covers and E-ONE logo.	$780
1050-0033	Dura-Brite finish on aluminum wheel (EA). Not available on 13" wheel (425 or 445 tires).	$100
1050-0038	Steel wheels for rear axle (4) 24" split rim.	$6,312
1050-0039	Polish inner and outer aluminum wheel (EA).	$82
1050-0040	Tyron wheel safety bands (PR). Location: [#LOC].	$820
1050-0042	Two heavy duty steel wheels for front axle. For use with 21.5K and greater ratings only.	$1,571
1050-0043	Rear axle (tandem) wheel simulator kit. Includes full stainless steel wheel simulators with integrated lug nut covers and E-ONE logo.	$1,560
1050-0044	Accuride aluminum wheels for front axle (2).	$1,615
1050-0045	Accuride aluminum wheels for rear axle (4).	$3,225
1050-0046	Accuride aluminum wheels for rear axles (8).	$6,448
1050-0047	Front axle wheel trim kit. Includes stainless steel "Cover-Up" covers with E-ONE logo. Not available with Stemco oil seals.	$286
1050-0048	Rear axle (single) Wheel Trim kit. Includes stainless steel "Cover-Up" covers with E-ONE logo. Not available with Stemco oil seals.	$366
1050-0049	Rear axle (tandem) Wheel Trim kit. Includes stainless steel "Cover-Up" covers with E-ONE logo.	$733
1050-0068	Each outboard facing wheel of the single axle unit shall have valve stem extensions; front 2", rear appropiately sized. Includes additional set (inside and outside) ship loose.	$219
1050-0070	Accuride aluminum wheels outer and steel inner for rear axles (4).	$1,919
1060-0001	Two Michelin 315 tires model XZA-1 for front axle.	$1,344
1060-0004	Four Michelin 11R tires model XZE2 highway tread for rear axle.	$2,176
1060-0005	Four Michelin 12R tires model XZE highway tread for rear axle.	$2,519
1060-0006	Four Michelin 315 tires model XZA-1 for rear axle	$2,569
1060-0007	Eight Michelin 11R tires model XZE2 for rear axles.	$3,663
1060-0008	Eight Michelin 12R tires model XZE for rear axles	$4,351
1060-0009	Eight Michelin 315 tires model XZA-1 for rear axles	$5,133
1060-0010	Two Goodyear 315 tires for front axle	$1,581
1060-0011	Two Goodyear 385 tires for front axle	$1,747
1060-0012	Two Goodyear 425 tires for front axle	$1,909
1060-0013	Two Goodyear 445 tires for front axle	$2,058
1060-0016	Four Michelin 12R rear tires with XDN2 mud and snow tread.	$2,978
1060-0017	Four Michelin 315 rear tires with XDN2 mud and snow tread.	$3,023
1060-0018	Four Goodyear 11R rear tires with Mud and Snow tread	$2,978
1060-0019	Four Goodyear 12R rear tires with Mud and Snow tread	$3,321
1060-0020	Four Goodyear 315 rear tires with mud and snow tread. Intermittent fire service rating if GAWR is over 29,560.	$3,493
1060-0021	Eight Michelin 11R rear tires with XDN2 mud and snow tread.	$5,267
1060-0022	Eight Michelin 12R rear tires with XDN2 mud and snow tread.	$5,951
1060-0023	Eight Michelin 315 rear tires with Mud and Snow tread	$6,044
1060-0024	Eight Goodyear 11R rear tires with Mud and Snow tread	$5,951
1060-0025	Eight Goodyear 12R rear tires with Mud and Snow tread	$6,638

1060-0026	Eight Goodyear 315 rear tires with Mud and Snow tread. Intermittent fire service rating if GAWR is over 59,120.	$6,982
1060-0030	Four Goodyear 315 rear tires with G291 highway tread.	$3,207
1060-0033	Eight Goodyear 315 rear tires with G291 highway tread.	$6,410
1060-0042	Two Michelin 365 tires model XZA for front axle. Speed rating for up to 75 mph. Requires alum wheels.	$1,322
1060-0043	Two Michelin 425 tires model XZY3 for front axle.	$1,615
1060-0044	Two Michelin 445 tires model XZY3 for front axle.	$1,598
1060-0045	Two Michelin 445 tires model XFE for front axle.	$1,777
1060-0046	Two Michelin 425 tires model XFE for front axle.	$1,507
1060-0047	Two Michelin 385 tires model XFE for front axle.	$1,388
1060-0048	Four Michelin 12.00 x 24 tires model XZY LRH for rear axle. Note: Tires have an operating restriction per Michelin bulletin MSPN29163 (maximum one-way distance of 50-miles with a one (1) hour cool down).	$3,866
1060-0049	Tyron tire pressure monitoring system model TPMS. Includes wireless remote display in cab.	$1,057
1060-0050	Tire pressure monitoring valve stem caps.	$153
1060-0051	Two Michelin 385 tires model XZY3 for front axle.	$1,496
1060-0052	Eight Michelin 275/80R tires model XZE2 for rear axles.	$5,445
1060-0053	PressurePro tire pressure monitoring system for single rear axle units. Includes bail mounted display in cab.	$900
1060-0054	PressurePro tire pressure monitoring system for tandem rear axle units. Includes bail mounted display in cab.	$1,076
1060-0060	Two Michelin 315 tires model XZY3 for front axle.	$1,068
1060-0061	Four Michelin 12R rear tires with Mud and Snow XDS tread	$2,978
1060-0072	Two Goodyear 385 tires for front axle.	$1,747
1060-0073	Two Goodyear 425 tires for front axle.	$1,909
1060-0074	Two Goodyear 445 tires for front axle	$2,058
1060-0075	Four Goodyear 11R rear tires with mud and snow tread.	$2,978
1060-0076	Four Goodyear 12R rear tires with mud and snow tread.	$3,321
1060-0077	Eight Goodyear 11R rear tires with Mud and Snow tread	$5,951
1060-0078	Eight Goodyear 12R rear tires with Mud and Snow tread	$6,638
1060-0079	Four Goodyear 11R rear tires with highway tread	$2,519
1060-0081	PressurePro tire pressure monitoring system for single rear axle units. Includes electrical system integrated display in cab.	$900
1060-0085	Eight Michelin 12R rear tires with Mud and Snow XDS tread	$5,951
1060-0086	Four Goodyear 11R rear tires with G287 MSA highway tread	$2,519
1060-0087	Two Goodyear 315 tires with G287 MSA tread for front axle	$1,581
1060-0092	Eight Michelin 275/80R22.5 rear tires with Mud and Snow tread.	$5,792
1060-0094	Cat's Eye model 6120-AB00 single rear axle tire pressure monitoring system. For use on 120 PSI tires. Includes braided lines.	$752
1060-0095	Eight Goodyear 315 rear tires with G287 MSA highway tread.	$6,653
1060-0096	Tire balancing (EA). Location: front tires.	$60
1060-0098	Two Bridgestone 315 tires model M860 for front axle.	$2,308
1060-0099	Four Bridgestone 12R tires model R250F highway tread for rear axle.	$3,772
1060-0101	Tire pressure monitoring integrated with V-MUX multiplex electrical system. Requires Vista display and D-TEK. For use with single rear axle units.	$594
1060-0102	Tire pressure monitoring integrated with V-MUX multiplex electrical system. Requires Vista display and D-TEK. For use with tandem rear axle units.	$1,026
1060-0103	Cat's Eye model 6130-AB00 single rear axle tire pressure monitoring system. For use on 130 PSI tires. Includes braided lines.	$752
1060-0104	Four Goodyear 12R rear tires with G661 HSA highway tread.	$2,978
1060-0105	Eight Goodyear 12R rear tires with G661 HSA highway tread.	$5,951
1060-0106	Four Goodyear 11R rear tires with G661 HSA highway tread.	$2,519
1070-0001	Rear suspension springs rated equal to the capacity of the axle.	$1,261
1070-0002	Rear suspension springs rated equal to the capacity of the axles.	$3,951
1070-0003	Rear suspension air ride rated equal to the capacity of the axle.	$5,125
1070-0004	Rear suspension air ride (40-46K) rated equal to the capacity of the axles.	$8,935
1070-0005	Air ride cab.	$2,636
1070-0007	Shock absorbers rear single axle. Not available on 31,000 lb.	$175
1070-0012	Reyco rear suspension springs rated equal to the capacity of the axle.	$1,261
1070-0013	Rear suspension air ride (48-54K) rated equal to the capacity of the axles.	$10,468
1070-0014	Rear suspension air ride (60-62K) rated equal to the capacity of the axles.	$12,083
1070-0015	Ridewell Dynalastic rear suspension (40-54K) rated equal to the capacity of the axles. Torque box applications only.	$11,769
1070-0017	Reyco rear spring suspension w/aux 33K rating.	$1,893
1070-0019	Rear suspension springs rated at 27,000 lbs.	$1,471

1070-0021	Rear suspension FIREMAAX EX air ride (50-54K) rated equal to the capacity of the axles. Requires TB modification on 4-jack aerials. (Raises OAH .5" over springs)	$10,423
1070-0022	Rear suspension FIREMAAX EX model FMX-482 air ride rated equal to the capacity of the axles (40-48K). Requires TB modification on 4-jack aerials. (Raises OAH .5" over springs)	$9,579
1070-0024	Lower leaf wrap. Single rear axle only.	$503
1070-0027	Rear suspension FIREMAAX EX model FMX-272 27,000 lb. single axle air ride.	$5,508
1070-0029	Rear suspension FIREMAAX EX model FMX-312 31,000 lb. single axle air ride. Requires aluminum wheels.	$7,214
1070-0030	Rear suspension FIREMAAX EX model FMX-622 air ride (60-62K) rated equal to the capacity of the axles. Requires alum wheels. (Raises OAH .5" over Raydan) (N/A on any TB aerial chassis except MM)	$12,226
1100-0000	16-1/2" x 6" S-cam brakes with ArvinMeritor automatic slack adjusters for front axle.	$288
1100-0001	Meritor EX225H 17" disc brakes for front axle.	$1,125
1100-0002	ArvinMeritor 16-1/2" x 7" S-cam brakes with cast brake drums for a single rear axle.	$288
1100-0003	Meritor EX225H 17" disc brakes for rear axle, maximum capacity 27,000 lbs.	$1,125
1100-0004	Meritor EX225H 17" disc brakes for rear axles, maximum capacity 54,000 lbs.	$1,720
1100-0005	Brake system air 4X2/4X4.	$7,613
1100-0007	Parking brake release mounted center of the engine cover.	$292
1100-0008	Brake system air 6X4.	$7,886
1100-0009	Front axle parking brake.	$481
1100-0010	Brake emergency release for spring.	$875
1100-0011	Roll Stability Control, Includes ATC. Not available on commercial chassis, tiller or tandem axle custom chassis.	$1,821
1100-0014	ArvinMeritor 16-1/2" x 7" S-cam brakes with cast brake drums for a tandem rear axle.	$347
1100-0018	Dust Shields. Front and Rear Axle. CAM Brakes only.	$335
1100-0019	Dust Shields. Rear Axle. CAM Brakes only.	$204
1100-0020	Compression fittings for all air brake system lines. Includes cab interior air lines as applicable.	$1,126
1100-0022	Dust Shields. Front and rear tandem axle. CAM brakes only.	$538
1100-0023	Stainless steel park brake release guard.	$195
1100-0024	G4 Electronic Stability Control (4x2), Includes RSC and ATC. Not available on 4x4, commercial chassis or tiller.	$3,204
1100-0025	ArvinMeritor 16-1/2" x 8.625" Q-Plus S-cam brakes with cast brake drums for a single rear axle. 24K axle only.	$1,186
1100-0026	G4 Electronic Stability Control (6x4), Includes RSC and ATC. Not available on 6x6 or commercial chassis.	$3,820
1100-0027	Knorr-Bremse 17" disc brakes for front axle. IFS only.	$1,125
1100-0028	ArvinMeritor 18" x 7" P-Type S-cam brakes with cast brake drums for a 33K single rear axle.	$2,079
1100-0031	Dana ESD225 17" disc brakes for front axle.	$1,125
1100-0032	Hinged stainless steel park brake release guard.	$260
1100-0033	Bendix 16-1/2" x 7" S-cam brakes for 32,500 Dana axle.	$288
1100-0034	Brake chambers 30-36 for 48K/54K tandem rear axle. N/A with disc brakes.	$997
1100-0036	16.5" x 8.625" P-Cast S-cam brakes for 27,000 - 33,000 Meritor axle.	$737
1100-0040	Gauge air brake application additional. Location: officer side overhead console.	$279
1100-0043	Emergency park brake activation valve mounted on the officer's side dash with stainless steel guard.	$609
1100-0045	2nd parking brake release mounted on the officer's side electrical access cover (side facing) with stainless steel guard. Severe duty interior only.	$817
1100-0046	Brake system air tank to be mounted as high as possible.	$195
1100-0048	Emergency park brake activation valve mounted on the center console offset driver side with stainless steel guard.	$609
1110-0000	Inlet for air system. Location: [#LOC].	$340
1110-0001	Air inlet auto eject. Includes weatherproof gasketed cover. [#LOC].	$438
1110-0002	Air dryer Bendix AD-9.	$444
1110-0003	Air dryer System Saver 1200.	$535
1110-0004	Air tank drains w/pull cords.	$389
1110-0005	Automatic moisture ejectors, heated.	$386
1110-0007	Air lines braided.	$2,074
1110-0008	Gauge air brake application mounted in cab	$279
1110-0011	Air intake restriction gauge.	$237
1110-0012	Air outlet off front ACC tank. It shall be located [#LOC].	$340
1110-0013	Air horns shut-off valve. Located in cab accessible by driver.	$100
1110-0025	Thomas 110 volt air compressor plumbed to air brake system.	$1,068
1110-0026	Air horns recessed in bumper (PR).	$757
1110-0027	Isolated air tank. Includes pressure protection valve.	$514
1110-0029	Diamond plate flip cover for air inlet or outlet with label attached with rivets mounted in driver's door jamb.	$105

1110-0041	Air horns Grover recessed in bumper (PR).	$923
1110-0042	Label on isolated air tank "Air Horns Only".	$29
1110-0044	Air inlet Auto-Eject. Includes [#COL] weatherproof gasketed cover. Location: [#LOC].	$438
1110-0045	Gast air compressor 110v model 3HBB-10-M300AX.	$987
1110-0046	Kussmaul 12V Auto Drain. For use with Kussmaul air compressor.	$428
1110-0049	Air Lines Wrapped in Thermal Loom	$1,679
1110-0050	Air brake lines to have 4 to 6" slack for future service work.	$102
1110-0052	Air horns recessed behind bumper (PR). Includes E-ONE grilles on bumper.	$952
1110-0053	Air horns Grover recessed in front bumper. (1) air horn 21" long, (1) air horn 24.5" long	$965
1110-0054	Relocate air dryer to opposite the exhaust system inside the frame rails.	$246
1110-0055	Air horns will alternate from driver to officer.	$365
1110-0056	Air dryer Bendix ADIP.	$571
1110-0058	Air horns recessed in bumper (PR) with bells behind bumper.	$811
1110-0066	Air horns Grover recessed in front bumper. (1) air horn 21" long, (1) air horn 24.5" long.	$1,133
1110-0077	Recessed air outlet off isolated tank. Location: [#LOC].	$340
1110-0082	Air horns Grover model 2040 rectangular recessed in bumper (PR) with snow caps.	$983
1110-0090	Air horns Grover recessed in bumper (PR) with snow caps.	$1,041
1110-0095	Automatic moisture ejector, heated. Wet tank only.	$166
1110-0097	Automatic moisture ejector, non-heated (EA).	$126
1110-0102	Thomas 220 volt air compressor plumbed to air brake system.	$1,068
1110-0104	Air horns Grover (1510) recessed in bumper (PR). Locate one each side outboard of frame.	$946
1110-0105	Gast air compressor 120V/240V model 4HCC-10-M450X.	$1,146
1110-0106	Air horns Grover recessed behind bumper (PR). Includes E-ONE grilles on bumper.	$1,119
1110-0109	Air hose routed from the compressor to the dryer shall be upgraded to include stainless steel mesh for the full length of hose.	$71
1110-0111	Gast air compressor 110v model 1HAB-10-M100X.	$907
1125-0000	Retarder Telma focal mounted. Not available on tandem axle or four jack aerials	$9,270
1125-0001	Brake Jacob's exhaust	$690
1125-0002	Jacobs engine compression brake.	$1,604
1125-0003	Allison transmission retarder.	$10,985
1125-0006	Driveline Mounted Telma Retarder. Standard switch location is on console, manual lever on engine cover offset to driver's side. Cut off at 5 mph - 25% applied with throttle release & balance with brake application.	$9,270
1125-0007	Tag located at Jacob Brake Controller. To read: Do Not Operate on Wet or Slippery Surfaces.	$72
1125-0012	Driveline Mounted Telma Retarder. All four stages applied with brake application.	$9,270
1125-0013	Lever control for Telma retarder. 5 position lever with low speed cutout.	$268
1125-0014	Dual retarder operation. Engine Jacobs brake and transmission retarders to both be operable at the same time. Requires special approval. Option contingent on receiving formal approval from driveline component suppliers.	$110
1125-0015	Relocate Jake Brake control to driver side of electrical access cover.	$364
1125-0019	Driveline Mounted Telma Retarder. Stage 1 & 2 applied off throttle; stage 3 & 4 applied with brake application.	$9,270
1125-0020	Jacobs engine compression brake. To be controlled only by a single on/off sw.	$1,604
1125-0021	Driveline Mounted Telma Retarder to operate w/ 5 position lever within cab. 5 position lever sold separately.	$9,270
1150-0054	Hinged diamond plate lid for driver side bumper tray. Includes 1/4 turn latch and gas shock hold open.	$248
1150-0055	Hinged diamond plate lid for center bumper tray. Includes 1/4 turn latch and gas shock hold open.	$272
1150-0056	Hinged diamond plate lid for officer side bumper tray. Includes 1/4 turn latch and gas shock hold open.	$248
1150-0059	Red vinyl lid with velcro fasteners for bumper tray driver side.	$162
1150-0060	Red vinyl lid with velcro fasteners for bumper tray officer side.	$162
1150-0061	Red vinyl lid with velcro fasteners for bumper tray center.	$162
1150-0062	Black vinyl lid with velcro fasteners for bumper tray driver side.	$162
1150-0063	Black vinyl lid with velcro fasteners for bumper tray officer side.	$162
1150-0064	Black vinyl lid with velcro fasteners for bumper tray center.	$162
1150-0065	Diamond plate lid for driver, center, and officer hose trays. 5.25" high with dual chrome grab handles, rubber hood latches and gas shocks.	$535
1150-0085	Nylon black strap on officer side front bumper tray (EA).	$70
1150-0086	Nylon black strap on driver side front bumper tray (EA).	$70
1150-0087	Nylon black strap on center front bumper tray (EA).	$70
1150-0094	Hinged diamond plate lid for driver side bumper tray. Includes D-Ring latch and gas shock hold open.	$272
1150-0095	Hinged diamond plate lid for center bumper tray. Includes D-Ring latch and gas shock hold open.	$296

1150-0096	Hinged diamond plate for officer side bumper tray. Includes D-Ring latch and gas shock hold open.	$272
1150-0097	Tray driver side bumper outboard for hydraulic/cord reel.	$622
1150-0098	Tray officer side bumper outboard for hydraulic/cord reel.	$622
1150-0100	Hinged floor of center bumper tray. Hinged to the rear.	$688
1150-0102	Diamond plate lid for driver hosetray. 5.25" high with chrome grab handle, rubber hood latch, gas shock and water stop angle.	$352
1150-0103	Diamond plate lid for center hose tray 5.25" high with chrome grab handle, rubber hood latch, gas shock and water stop angle.	$352
1150-0104	Diamond plate lid for officer hosetray. 5.25" high with chrome grab handle, rubber hood latch, gas shock and water stop angle.	$352
1150-0105	Diamond plate lid for center and driver hosetrays; 2/3 lid. 5.25" high with chrome grab handle, rubber hood latches, gas shocks and water stop angle.	$443
1150-0106	Diamond plate lid for center and officer hosetrays; 2/3 lid. 5.25" high with chrome grab handle, rubber hood latches, gas shocks and water stop angle.	$443
1150-0107	Nylon black strap with clip release on officer side front bumper tray.	$125
1150-0108	Nylon black strap with clip release on driver side front bumper tray.	$125
1150-0109	Nylon black strap with clip release on center front bumper tray. The strap shall be attached to the inboard side of the tray and shall not reduce the overall tray capacity	$125
1150-0111	Additional divider for front bumper hose tray.	$93
1150-0112	Hinged diamond plate lid for center bumper tray. Includes D-Ring latch and moon spring hold open.	$296
1150-0114	Access cover in center bumper tray for center bumper mounted speaker.	$84
1150-0115	Notch bumper tray lid for preconnected hose. Notch location: [#LOC].	$122
1150-0116	Bumper tray driver's side with slats 10 inches deep (approx 9 inches to slats).	$409
1150-0117	Bumper tray driver's side with slats 12 inches deep (approx 11 inches to slats).	$409
1150-0118	Bumper tray driver's side with slats 14 inches deep (approx 13 inches to slats).	$409
1150-0119	Bumper tray center of bumper with slats 10 inches deep (approx 9 inches to slats).	$409
1150-0120	Bumper tray center of bumper with slats 12 inches deep (approx 11 inches to slats).	$409
1150-0121	Bumper tray center of bumper with slats 14 inches deep (approx 13 inches to slats).	$409
1150-0122	Bumper tray officer's side with slats 10 inches deep (approx 9 inches to slats).	$409
1150-0123	Bumper tray officer's side with slats 12 inches deep (approx 11 inches to slats).	$409
1150-0124	Bumper tray officer's side with slats 14 inches deep (approx 13 inches to slats).	$409
1150-0125	Divider center bumper hose tray running front to back with adjustable track (Provides two storage areas, one left and one right of divider).	$215
1150-0126	Divider center bumper hose tray running side to side with adjustable track (Provides two storage areas, one ahead and one behind divider).	$215
1150-0127	Tray center of bumper with slats 34x13x16 with divider running side to side	$622
1150-0128	Notch front bumper tray for speaker/Q2B. Will reduce front hose/equipment load. Center tray only.	$110
1150-0129	Diamond plate lid for center hosetray. Includes chrome grab handle, rubber hood latches and gas shock.	$352
1150-0130	Black nylon cargo net on center front bumper tray.	$268
1150-0131	Extinguisher tube in front bumper extension. Location: [#LOC].	$691
1150-0132	Tray center bumper for hydraulic/cord reel.	$680
1150-0133	Diamond plate raised full lid for extended front bumper. 6" high with dual chrome grab hands, rubber hood latches and gas shocks.	$535
1150-0136	Bumper tray center of bumper with slats 16 inches deep (approx 15 inches to slats). Mount tray 1" above gravel shield.	$490
1150-0137	Diamond plate lid for center hosetray and jumpline next to tray. 5.25" high with chrome grab handle, rubber hood latch, gas shock and water stop angle if applicable.	$405
1150-0138	Bumper pan driver's side without slats 4 inches deep with strap. For use with suction strainer only.	$409
1150-0139	Nylon black strap with aluminum quick release buckle for front bumper hose tray. Strap to attach to front and rear walls of tray down low as applicable. Location: [#LOC].	$102
1150-0140	Bumper tray center of bumper with slats 14 inches deep (approx 13 inches to slats). Mount tray 1" above gravel shield.	$490
1150-0141	Bumper tray officer's side with slats 12 inches deep (approx 11 inches to slats). Mount tray 1" above gravel shield.	$490
1150-0142	Hinged diamond plate lid for center bumper tray. Includes (4) sides, 1/4 turn latch and gas shock hold open. For use with raised compts only.	$351
1150-0143	Hinged diamond plate lid for officer bumper tray. Includes (4) sides, 1/4 turn latch and gas shock hold open. For use with raised compts only.	$351
1150-0144	Diamond plate lid for center hosetray and jumpline next to tray. 8.25" high with chrome grab handle, rubber hood latch, gas shock and water stop angle if applicable.	$459

1150-0145	Single crosslay on top of the front bumper gravel shield. Tray to be "U" shape, 10" wide x 8" high x the width of the gravel shield. Vinyl cover, [#COL], with end flaps to cover crosslay, velcro along front edge, fastened along back. Requires 24" extension.	$754
1150-0146	Water stop angle. Gravel shield mounted. Requires raised lid and/or 28" bumper extension with reel trays.	$175
1150-0147	Diamond plate lid for driver, center, and officer hose trays. 5.25" high with dual chrome grab handles, SS butterfly latches and gas shocks.	$608
1150-0149	Nylon black cargo net on sides for bumper crosslay.	$198
1150-0150	Double crosslay on top of the front bumper gravel shield. Tray to be "U" shape, approx 20" wide x 7.5" high x 90" wide. Holds 200' of 1.75" DJ (each). Includes tri-fold diamond plate cover hinged at the front. Requires seperate side cover option and 28" extension.	$1,293
1150-0152	Hinged diamond plate lid for officer side bumper tray. Includes D-Ring latch and gas shock hold open.	$272
1150-0153	Bumper tray officer's side with slats located between front intake and frame extension. Tray to be approx 9" W (min) x 17" L x 14" D (13" to slats) to hold 25' of 5" LDH.	$409
1150-0154	Bumper tray center of bumper with slats located to rear of Q2B. Tray to be approx 34"W x 9"L x 10" deep (9" to slats).	$595
1150-0160	Hinged smooth plate lid for center bumper tray. Includes D-Ring latch and gas shock hold open. Smooth plate lid will be painted with black Durabak.	$345
1150-0161	Double crosslay on top of the front bumper gravel shield. Tray to be "U" shape to hold 200' of 1.75" DJ (each). Includes bi-fold diamond plate cover hinged at the rear. Requires separate side cover option and 28" extension.	$1,293
1150-0163	Tray officer side bumper next to front intake. Half moon style for 25' of 5" rolled hose.	$591
1150-0177	Notch front bumper tray for speaker/Q2B. Will reduce front hose/equipment load. Driver's side only.	$110
1150-0178	Hinged diamond plate lid for center bumper tray. Includes push button latch and gas shock hold open.	$272
1150-0181	Nylon black strap with aluminum quick release buckle for front bumper hose tray. Strap to attach to side walls of tray down low as applicable. Location: [#LOC].	$102
1150-0184	Vinyl [#COL] side covers for diamond plate bumper crosslay cover.	$167
1150-0185	Hinged diamond plate lid for center bumper tray. Includes push button latch and moon spring hold open.	$272
1150-0187	Nylon yellow strap with aluminium quick release buckle for front bumper hose tray. Strap to attach to front and rear walls of tray down low as applicable. Location: [#LOC].	$102
1150-0196	Tray officer side bumper next to front intake. Half moon style for 20' of 6" rolled hose.	$591
1150-0197	Nylon black strap with aluminium quick release buckle. Location: driver, officer and center top of front bumper gravel shield.	$305
1150-0198	Notch front bumper tray for speaker/Q2B. Will reduce front hose/equipment load. Officer's side only.	$110
1150-0199	Nylon black cargo net with bungee hold downs on sides for bumper crosslay.	$246
1150-0201	Notch front bumper tray for speaker/Q2B. Notch to be sized as close to obstacle as possible to provide more storage space in tray. Will reduce front hose/equipment load. Center only.	$110
1150-0203	Hinged smooth plate lid for center bumper tray. Includes D-Ring latch and gas shock hold open. Smooth plate lid will be painted with black Scorpion coating.	$345
1150-0206	Hinged diamond plate lid for center bumper tray. Includes push button latch chrome grab handle and gas shock hold open.	$317
1150-0207	Hinged diamond plate lid for center bumper tray. Includes 1/4 turn latch and moon spring hold open.	$272
1150-0210	Tray driver side bumper next to frame. Half moon style for 25' of 5" rolled hose.	$591
1150-0212	Nylon black strap with clip release on officer side front bumper tray running front to back.	$125
1150-0213	Bumper tray center of bumper (w/o slats) 10 inches deep.	$409
1150-0214	Traffic cone storage on front bumper extension. Cones to be oriented downard through a 7 3/4" hole in the gravelshield. Includes nylon strap with aluminum buckle. Location: [#LOC].	$339
1150-0215	Hinged diamond plate lid for center bumper tray. Includes 1/4 turn latch and two (2) gas shock hold open.	$298
1150-0219	Additional gas shock on front bumper tray lid. Location: [#LOC].	$140
1150-0225	The rear wall of bumper tray to have louvers for additional ventilation. Location: [#LOC].	$159
1150-0230	Bumper trough full length, mounted on top of gravel shield. Trough shall run side to side 4" high, 7" wide made from 3/16" smooth plate aluminum.	$219
1150-0231	Nylon black strap with aluminum quick release buckle for front bumper hose tray. Strap to attach to front and rear walls of tray as high as possible. Location: [#LOC].	$102
1150-0232	Hinged diamond plate lid for center bumper tray. Includes Tri-Mark latch and gas shock hold open.	$365
1150-0235	Diamond plate lid 3/16 " thick for driver, center, and officer hose trays. 5.25" high with dual chrome grab handles, SS butterfly latches and gas shocks.	$660

1150-0236	Recessed bumper double crosslay to hold of 200' of 1.75" DJ hose in each crosslay. The crosslay floor/bottom shall be slotted to allow drainage (no slats). Includes hinged bi-fold raised lid in center with outboard fixed panels for optional equipment and stainless steel scuff guards at each side of crosslay opening across bottom and sides. Requires 28" extension, side covers, 12" heavy duty bumper and engineering approval.	$3,351
1155-0002	Winch, electric front mounted Ramsey 12,000 lb.	$3,679
1155-0003	Winch Warn Series 8 - 8,000lb with 125' 3/8" plated cable.	$3,158
1155-0005	Winch, Warn Series 12, 12,000 lb. with 125' 3/8" plated cable. Includes access door with quarter turn latch and spring hold open device.	$4,627
1155-0013	Winch, Warn Series 12, 12,000 lb. with 125' 3/8" plated cable. Includes access door that is smooth plate alum (IPO tread) and painted with black Scorpion brand coating inside and outside surfaces (smooth finish). Latch to be D-Ring style (IPO std. 1/4 turn latch). Lid to have 1 gas shock.	$4,742
1160-0000	Bumper 10" stainless steel.	$1,150
1160-0001	Bumper 12" high swept back stainless steel.	$1,302
1160-0002	Bumper reinforcement backing. For use with 10" SS or heavy duty bumpers only.	$407
1160-0008	3/16" Front Bumper Gravel Shield.	$411
1160-0012	12" Front Bumper Gravel Shield Extension.	$129
1160-0013	16" Front Bumper Gravel Shield Extension.	$248
1160-0014	20" Front Bumper Gravel Shield Extension.	$440
1160-0015	24" Front Bumper Gravel Shield Extension.	$583
1160-0016	28" Front Bumper Gravel Shield Extension.	$705
1160-0020	License plate holder mounted center of front bumper.	$35
1160-0021	Number plate, removable size to fit between air horns on front bumper. Spaced out from face of bumper so plate can be removed.	$158
1160-0030	Steel tow bar located below front bumper mounted to chassis extensions for towing purposes only, painted black.	$1,659
1160-0031	Notch front bumper for low "S" type front intake. Includes tray below pipe extending from cab to bumper.	$977
1160-0034	8" Front Bumper Extension.	$129
1160-0041	Heavy duty front bumper 10" high with full wrap around. To be painted job color.	$2,018
1160-0042	Heavy duty front bumper with full wrap around. To be painted 767681 EG black.	$2,018
1160-0049	License plate holder mounted officer side of front bumper.	$35
1160-0050	12" heavy duty front bumper with full wrap around. To be painted L0318EG metallic silver.	$2,018
1160-0051	3/16" Front Bumper Gravel Shield. Smooth plate painted with black Durabak.	$1,210
1160-0052	Recessed winch receiver in front bumper for model QM5000 portable winch. Includes swing down front center section of bumper for winch access, bumper reinforcement, winch enclosure, raised lid, and port winch wiring. For use on E-ONE chassis with 10" high 28'' ext bumper only.	$4,378
1160-0053	14" Front Bumper Gravel Shield Extension.	$189
1160-0054	Overlay front heavy duty bumper with diamond plate panels.	$344
1160-0055	Guard straps for bumper mtd recessed Q2B - polished stainless steel.	$274
1160-0060	Dock bumpers (4) on front bumper equally spaced (as applicable).	$272
1160-0061	10" heavy duty front bumper with full wrap around. To be painted L0318EG metallic silver.	$2,018
1160-0062	Rear bumper steel 8" deep with Gator Grip dia plt overlay. Includes rubrail across rear surface and handrail located below hosebed.	$1,725
1160-0064	Heavy duty front bumper 10" high with full wrap around. To be painted [#COL].	$2,018
1160-0065	Heavy duty front bumper 10" high with full wrap around. Center of bumper to have a 5" deep notch for recessed Q2B. Bumper to be painted job color.	$2,504
1160-0066	License plate holder mounted driver side of front bumper.	$35
1160-0068	1/8" Front Bumper Gravel Shield. Smooth plate painted with black Durabak.	$1,210
1160-0084	Heavy duty 12" front bumper with full wrap around. To be painted job color.	$2,018
1160-0094	18" Front Bumper Gravel Shield Extension.	$345
1160-0095	Heavy duty front bumper with full wrap around. To be painted FLNA 91733 silver.	$2,018
1160-0103	Rear bumper steel 8" deep with Gator Grip dia plt overlay. Includes rubrail across rear surface and handrail located horizontally below turntable access door.	$1,725
1160-0104	Swing down front section of bumper. 10" front bumper only. Requires extended front bumper and bumper reinforcement.	$1,046
1160-0116	Heavy duty front bumper 10" high with full wrap around. Driver side of bumper to have a 5" deep notch for recessed Q2B. Bumper to be painted job color.	$2,504
1160-0117	License plate holder mounted driver side of front bumper.	$35
1200-0018	"T" handle transmission selector.	$1,376
1200-0020	TransSynd synthetic transmission fluid for EVS3000.	$172
1200-0021	TransSynd synthetic transmission fluid for EVS 4000.	$271
1200-0062	The engine oil and transmission dip sticks to have tags. Tags to be attached to each by cable. Use colored tag to match dip stick color.	$137
1200-0063	The engine oil dipstick to have yellow handle and the transmission dipstick to have a red handle.	$194

1200-0083	Transmission re-programming. "D" allows transmission to shift from 1st - 4th gear, and "Mode" allows 5th gear.	$609
1200-0115	Polyurethane engine mounts. Cummins engines only.	$98
1200-0234	Eng/Trans Cummins ISL 350HP/EVS3000 2013 EPA compliant engine.	$72,925
1200-0235	Eng/Trans Cummins ISL 400HP/EVS3000 2013 EPA compliant engine.	$84,877
1200-0236	Eng/Trans Cummins ISL 450HP/EVS3000 2013 EPA compliant engine.	$85,611
1200-0238	Eng/Trans Cummins ISX12 450HP with EVS4000 transmission. 2013 EPA Compliant.	$110,107
1200-0239	Eng/Trans Cummins ISX12 500HP with EVS4000 transmission. 2013 EPA Compliant.	$111,436
1200-0241	Eng/Trans Cummins ISX15 550HP with EVS4000 transmission. 2013 EPA Compliant.	$117,546
1200-0242	Eng/Trans Cummins ISX15 600HP with EVS4000 transmission. 2013 EPA Compliant.	$120,465
1200-0245	Eng/Trans Cummins ISX12 500HP with EVS4500 transmission. 2013 EPA Compliant.	$113,150
1225-0005	Exhaust heat shield. Locate below compartment floor.	$166
1225-0006	Exhaust tip stainless steel for Plymovent. For exhaust extraction system.	$315
1225-0008	Wrap exhaust with heat tape from the turbo down to the flex pipe. Visually inspect after install for tears in material. Wrap outside with wire mesh to keep material from coming off.	$752
1225-0009	Anchor plate for Nederman exhaust system. For use with standard nozzle. Ship Loose.	$233
1225-0012	Ward No Smoke Exhaust System.	$15,687
1225-0013	Tailpipe support. Locate between tailpipe and body approx 10" in from edge of body.	$475
1225-0020	Exhaust tip MagneGrip. For exhaust extraction system. Tip to protrude appox. 2" outside of body (Not rubrail).	$578
1225-0021	Cover exhaust with blanket from the turbo down to the flex pipe. Visually inspect after install for tears in material.	$266
1225-0024	Plymovent Grabber magnetic exhaust end. Bolt-on for exhaust extraction system.	$385
1225-0026	Rain cap vertical exhaust chrome.	$79
1225-0027	Vertical exhaust officer side. This will include the vertical exhaust support. Aerial vertical exhaust to be plumbed through (internal) right rear of pump module. Top of pipe to turn out.	$2,176
1225-0031	Wrap exhaust with heat tape from the turbo down to the muffler. Visually inspect after install for tears in material. Wrap outside with wire mesh to keep material from coming off.	$796
1225-0033	Exhaust diverter. Diverts exhaust from officer side to driver side. Includes well labeled switch accessible to driver.	$1,182
1225-0035	Exhaust end for Plymovent. For exhaust extraction system. Exhaust to be angled rearward to allow for possible deflection if impacted.	$429
1250-0003	Frame 10.25 x 3.5 x .375 chassis.	$5,000
1250-0004	Frame - Torque box for HP95 Mid-Mount aerial.	$18,771
1250-0005	Frame - Torque box for tandem axle RM aerial.	$19,358
1250-0006	Frame liner 9.375 x 3.125 x .375.	$2,753
1250-0014	Frame - Torque box for HP100 platform.	$25,108
1250-0025	Frame 12 x 3.5 x .375 chassis.	$5,000
1250-0026	Frame liner 11.125 x 3.125 x .375.	$3,062
1250-0027	Frame - Torque box for tandem axle RM aerial with no waterway pipe.	$17,626
1250-0029	Torque box modifications to allow for Hendrickson FIREMAAX air ride suspension.	$1,517
1250-0061	Frame liner "L" 8.875 x 3.125 x .375.	$2,555
1250-0062	Frame - Torque box for HP100 platform with 6" w/way pipe. For use with industrial applications only.	$27,206
1250-0063	Frame - Torque box for single axle RM aerial.	$17,764
1250-0064	Frame - Torque box for HP100 platform with 5" w/way pipe. For use with industrial applications only.	$27,128
1350-0001	Dual fuel fill package. Additional fuel fill provided on officer side of unit.	$458
1350-0002	Recessed fuel fill	$117
1350-0003	Fuel system 50 gallon.	$1,367
1350-0004	Fuel system 50 gallon saddle tanks.	$2,352
1350-0005	Fuel system 65 gallons.	$1,444
1350-0008	Fuel water separator Fuel-Pro 382. Filter is top servicable.	$625
1350-0009	Fuel line hose braided.	$266
1350-0010	Fuel pick-up for generator or pump. Includes hoses run to generator compartment.	$123
1350-0011	Fuel pump electric w/re-prime.	$379
1350-0012	Fuel shut-off valve. Location: [#LOC].	$96
1350-0013	Racor fuel/water separator to be a bottom drop out style. Shall include indicator light and audible alarm.	$659
1350-0014	Thermal control in-line fuel heater.	$438
1350-0023	Fuel cooler, to be routed from the discharge side of the pump to the chassis fuel line. Cooler to be functioning when the pump is in operation.	$419
1350-0026	Fuel Lines Wrapped in Thermal Loom	$787
1350-0027	Fitch fuel catalyst drop in style	$751
1350-0037	Fuel system w/65 gallon stainless steel tank.	$2,538
1350-0040	Fuel system 50 gallon stainless steel saddle tanks.	$4,584

1350-0043	Fuel system w/50 gallon stainless steel tank.	$2,332
1350-0046	Fuel water separator Fuel-Pro 382 with light and alarm. Filter is top servicable.	$723
1350-0048	Fuel system 100 gallons. Tank located above framerails to rear of cab.	$2,069
1350-0049	Fuel system 85 gallons. Tank located above framerails to rear of cab.	$2,069
1350-0050	Fuel system 60 gallon saddle tanks.	$2,780
1400-0002	Battery four group 31 1000 CCA.	$906
1400-0003	Battery six group 31 1000 CCA.	$1,354
1400-0010	Battery six Delco 1150 Hi-Cycle 700 CCA.	$1,193
1400-0011	Battery splash cover for ULC compliance.	$272
1400-0019	Special battery jumper stud location. Jumper studs to be located [#LOC].	$320
1400-0020	Relocate custom chassis batteries. Location: [#LOC].	$958
1400-0023	Battery six Delco 1110 Hi-Cycle 750CCA.	$1,193
1400-0024	Jumper studs to be located below driver's side front corner of body (or pump module if equipped). Studs to face down with positive stud outboard.	$193
1400-0027	Additional set of jumper studs. Location: Opposite standard location.	$328
1400-0028	Battery six Optima model D31T 900CCA.	$3,156
1400-0032	Battery five group 31 1000 CCA (two left / three right). For use with below cab DEF tank only.	$1,131
1400-0033	Heater pads for (4) Group 31 battery system. Wire pads to block heater receptacle.	$924
1400-0034	Stainless steel battery trays.	$457
1400-0036	Battery six group 31 1000CCA. Deka model 1231MF.	$1,567
1400-0038	Battery two 8D 1400 CCA.	$1,107
1400-0039	Battery five Optima model D31T 900CCA.	$2,793
1400-0040	Battery set additional two group 31 1000 CCA. Location: [#LOC].	$501
1400-0042	Jumper studs to be located below driver's side front corner of body (or pump module if equipped). Studs to face outboard.	$193
1500	**Cab**	
1510-0000	Seat cavity covers.	$157
1510-0035	Universal air pack bottle bracket (EA). Location: [#LOC].	$137
1510-0038	Driver seat 911 air ride.	$844
1510-0039	Driver seat to be 911 air ride with SCBA back	$1,004
1510-0040	Officer seat to be 911 air ride	$844
1510-0041	Officer seat 911 air ride SCBA.	$1,004
1510-0042	Officer seat to be 911 fixed SCBA.	$820
1510-0043	Driver seat to be Bostrom air ride.	$935
1510-0044	Driver seat to be Bostrom air ride with SCBA back	$1,085
1510-0045	Officer seat to be Bostrom air ride.	$935
1510-0046	Officer seat to be Bostrom air ride SCBA.	$1,085
1510-0047	Officer seat to be Bostrom fixed SCBA.	$908
1510-0048	Driver seat to be 911 electric	$1,261
1510-0049	Driver seat to be Bostrom electric.	$1,348
1510-0050	Rear facing 911 seat with SCBA driver's side.	$705
1510-0051	Engine cover 911 one man bench with SCBA	$924
1510-0052	Engine cover 911 two man bench with SCBA.	$1,561
1510-0053	Rear facing 911 seat with SCBA officer's side.	$705
1510-0054	Rear facing Bostrom seat with SCBA driver's side.	$680
1510-0055	Engine cover Bostrom one man bench with SCBA	$950
1510-0056	Engine cover Bostrom two man bench with SCBA.	$1,582
1510-0057	Rear facing Bostrom seat with SCBA officer's side.	$680
1510-0058	Fold down 911 seat located [#LOC]	$379
1510-0059	Fold down 911SCBA seat located [#LOC].	$837
1510-0060	Fold down Bostrom seat located [#LOC].	$379
1510-0061	Fold down Bostrom SCBA seat located [#LOC].	$787
1510-0062	Two man bench centered on rear wall with 911 SCBA backs.	$1,202
1510-0063	Two man bench centered on rear wall with Bostrom SCBA.	$1,483
1510-0064	Four man bench centered on rear wall with 911 SCBA	$2,834
1510-0065	Four man bench centered on rear wall with Bostrom SCBA.	$2,610
1510-0066	One man bench centered on rear wall with 911 SCBA	$978
1510-0067	One man bench centered on rear wall with Bostrom SCBA	$1,067
1510-0076	Bostrom SCBA seats forward facing center of rear wall (PR). Free standing with individual risers on rear wall.	$1,813
1510-0080	Officer seat to be 911 attendant.	$593
1510-0081	Cab occupant detection seating system. Wired to visual indicator (hazard light). Includes audible alarm. Requires multiplex electrical system.	$4,154
1510-0082	Zico Quic-Hold mechanical air pack bottle bracket for 5" bottle (ea). Model MWAB with adjustable footplate and pull release strap. Location: [#LOC].	$498
1510-0083	911 Attendant seat with individual riser (PR). Locate centered on rear wall.	$2,025

1510-0084	Officer seat to be Bostrom electric	$1,348
1510-0085	Custom logo embroidery (EA). Bostrom seats only. Requires set-up sales code.	$119
1510-0086	Embroidery set-up for Bostrom cab seats.	$614
1510-0087	Center rear wall seats to be mounted approximately 11" apart. Quest only.	$214
1510-0088	911 SCBA seats forward facing center of rear wall (PR). Free standing mtd on a common seat riser.	$1,892
1510-0089	Tailbone pad for jump seat(s). (Reference print #634894)	$44
1510-0091	Zico Quic-Hold mechanical air pack bottle bracket (EA). Model QLM-U-OPR with adjustable footplate and pull release. Location: [#LOC].	$602
1510-0092	Two man bench centered on rear wall with bench seat style back cushion.	$1,161
1510-0093	Custom logo embroidery (EA). Seats Inc. seats only. Requires set-up sales code.	$133
1510-0094	Embroidery set-up for Seats Inc. 911 cab seats.	$815
1510-0095	Driver seat Bostrom electric with integral seat belt.	$1,500
1510-0096	Officer seat Bostrom electric with SCBA back with integral seat belt.	$1,787
1510-0097	Rear facing seat driver side Bostrom with SCBA back and integral seat belt.	$761
1510-0098	Rear facing seat officer side Bostrom with SCBA back and integral seat belt.	$761
1510-0099	Rear wall seat Bostrom flip-up with SCBA back and integral seat belt. Location: [#LOC].	$1,055
1510-0100	Padded headrest for fold down jump seat (EA). Not available with rear wall windows.	$110
1510-0101	Driver and officer outboard rear facing seats mounted at 30 degree angle. Includes upper seat belt brkt adjusted to rear of cab.	$437
1510-0104	911 SCBA seat forward facing center of rear wall. Free standing mtd on seat riser.	$948
1510-0105	One man bench (PR) on rear cab wall with Seats 911 SCBA back. Location: driver and officer side outboard.	$1,205
1510-0106	911 SCBA seats forward facing rear wall (PR). Equally spaced with individual risers on rear wall.	$1,892
1510-0116	Fold-down seat located [#LOC].	$377
1510-0117	Bostrom SecureAll mechanical air pack bottle bracket (EA). Location: [#LOC].	$478
1510-0118	Flip-up 911 SCBA seat located [#LOC].	$861
1510-0119	Flip up Bostrom SCBA seat located [#LOC].	$888
1510-0120	Flip up 911 attendant seat located [#LOC].	$940
1510-0121	Flip up Bostrom attendant seat located [#LOC].	$1,046
1510-0122	Fold down seat with 911 SCBA back located [#LOC].	$839
1510-0123	Fold down seat with Bostrom SCBA back located [#LOC].	$852
1510-0124	Officer seat fixed Bostrom with SCBA back and integral seat belt.	$882
1510-0126	CrewGuard occupant seating detection system. Display location: [#LOC].	$3,107
1510-0127	Additional CrewGuard display. Location: [#LOC].	$247
1510-0128	FlameFighter air pack bottle bracket (EA). Model 17000 with adjustable footplate and push-button release. Location: [#LOC]	$482
1510-0129	Two man bench centered on rear wall with Bostrom SCBA backs for use with ALS provision with side access only. Includes (1) horizontally hinged door on the front of the rear bench seat for access to storage below bench.	$1,876
1510-0130	Flip up Bostrom ABTS attendant seat located [#LOC].	$977
1510-0131	Bostrom SecureAll mechanical air pack bottle bracket (EA) for bench / fold-down seat. Location: [#LOC].	$587
1510-0133	Adjust rear facing outboard seats as far inboard as appicable next to engine cover.	$106
1510-0134	Rear wall seat Bostrom air ride Sierra non SCBA. Includes single riser. N/A with outboard rear wall seats. Storage below seat N/A. Location: [#LOC].	$1,240
1510-0135	Arm rest installed on both sides of the seat. Location: [#LOC].	$452
1510-0136	Center rear wall seats to be mounted approximately 5" apart. C2X/T2X only.	$214
1510-0137	Bostrom SCBA seat forward facing center of rear wall. Free standing mtd on seat riser.	$956
1510-0138	Two man bench centered on rear wall with (1) 911 SCBA back driver and (1) bench back cushion officer.	$1,056
1510-0144	FlameFighter model 14000 air pack bottle bracket with model 39015 safety strap (EA). Location: [#LOC]	$206
1510-0146	911 AIR SCBA seats forward facing center of rear wall (PR). Free standing with individual risers on rear wall.	$2,719
1510-0147	911 SCBA seats forward facing rear wall (3). Equally spaced with common riser on rear wall. Extended cab with medium doors only.	$2,837
1510-0148	Rear facing 911 attendant seat driver's side.	$593
1510-0149	Rear facing 911 attendant seat officer's side.	$593
1510-0150	Two man bench centered on rear wall with (1) Bostrom SCBA back officer and (1) bench back cushion driver.	$1,337
1510-0152	N/A - Base extends to far rearward) Driver seat Bostrom mechanical with integral seat belt.	$1,706
1510-0153	Bostrom SCBA seats forward facing center of rear wall (PR). Free standing mounted on a common seat riser.	$1,813
1510-0154	Three man bench offset to driver on rear wall with Bostrom SCBA backs for use with ALS provision with officer side access only. Includes provision for rear heaters mounted below bench.	$2,354

1510-0155	Bostrom SCBA seats forward facing rear wall (3). Equally spaced with common riser on rear wall. Extended cab with medium doors only.	$2,663
1510-0185	Rear facing seat center rear engine cover Bostrom with SCBA back and integral seat belt.	$834
1510-0186	Driver and officer outboard rear facing seats mounted at 10 degree inboard angle.	$437
1510-0190	911 SCBA seats forward facing rear wall (3). Equally spaced with common riser on rear wall. Center seat lowered 4". For use with extended LTH aerial cab with medium doors only.	$2,837
1510-0200	Department patch sewn on Bostrom seat (EA). Requires customer supplied department patch for each seat.	$95
1510-0203	Bracket SCBA Lifeguard SmartDock Gen2 restraint system. Location: [#LOC].	$445
1510-0204	Officer seat to be 911 electric SCBA	$1,774
1510-0206	Zico electric hands-free air pack bottle bracket (EA). Model QM-ELB with adjustable footplate. Bracket release will be activated with park brake. Location: [#LOC].	$646
1510-0209	Driver seat to be 911 attendant. Includes forward and aft adjustment.	$593
1510-0210	Two man bench centered on rear wall with bench style back cushion for use with ALS provision with side access only.	$1,552
1510-0212	Officer seat to be Bostrom SCBA air ride with integral seat belt.	$2,314
1510-0214	Rear wall seat riser to be raised 4" in height. Includes 2" bench seat cushion thickness reduction for non-vista roofs.	$132
1510-0217	Arm rest rear wall (PR). Located outboard of non-SCBA back bench seat cushion.	$380
1510-0226	Officer seat to be Bostrom fixed attendant.	$575
1510-0228	Three man bench center on rear wall with 911 SCBA backs. Includes provision for rear heaters mounted below bench (if equipped).	$2,604
1510-0229	(2) Flip up Bostrom attendant seats with common riser located center on rear wall.	$2,091
1510-0235	Two man bench centered on rear wall with Seats 911 SCBA backs for use with ALS provision. Includes recess for SCBA brackets in wall.	$2,762
1510-0238	Bostrom SCBA seats with integral seat belt forward facing center of rear wall (PR). Free standing mounted on a common seat riser.	$1,974
1510-0240	Driver, officer and rear bench seat riser constructed of diamond plated IPOS (as equipped). Includes diamond plate overlay for rear facing seats.	$295
1510-0243	Two (2) Bostrom SCBA seat backs and a three (3) person bench (no center position).	$1,919
1510-0244	Driver seat Bostrom electric with SCBA back with integral seat belt.	$1,787
1510-0248	Seats Inc 911 SCBA seat forward facing rear wall center. For use with extended cab with side access ALS compartments. Includes pass-thru and rear heater provision (if equipped).	$969
1510-0249	Two man bench centered on rear wall with Bostrom SCBA backs for use with ALS provision with side access only or interior side compartments. Includes provision for rear heaters mounted below bench.	$1,876
1510-0252	Location modification of electric seat controls. The controls shall be relocated to the outboard side of the seat as mounted IPO standard location.	$190
1510-0253	Bostrom SecureAll mechanical air pack bottle bracket (EA). SecureAll factory adjusted to accommodate carbon fiber bottle(s) in mounted location(s) as specified. Location: [#LOC].	$478
1510-0254	Bostrom SecureAll mechanical air pack bottle bracket (EA) for bench / fold-down seat. SecureAll factory adjusted to accommodate carbon fiber bottle(s) in mounted location(s) as specified. Location: [#LOC].	$587
1515-0012	Paint air conditioning condenser job color.	$718
1515-0017	Air conditioning for the Typhoon X, CII X and Quest with Cummins ISC/ISL engine, radiator mounted condenser.	$5,975
1515-0018	Air conditioning for the CII X and Quest with Cummins ISM, ISX or Detroit Diesel Series 60 engine, roof top mounted condenser.	$6,979
1515-0019	Air Conditioning lines and fittings wrapped	$376
1515-0020	Well nut fasteners to attach A/C filter to overhead panel	$218
1515-0029	Air conditioning for the TyphoonX, CII X and Quest with Cummins ISC or ISL, roof top mounted condensor.	$6,979
1515-0036	Danhard cooling system. 115v / 12v 13,500 BTU wired to battery charger recept. Includes evaporator enclosure on ceiling centered rear of cab AC. Compressor located on rear engine cover with expanded metal cover painted to match cab interior. Condensor to be officer side roof mounted above canopy area. Note: System draws up to 12 amps AC.	$5,347
1515-0038	Air hose routed from the compressor to the dryer shall be upgraded to include stainless steel mesh for the full length of hose.	$71
1515-0039	Locate roof mountd AC condensor centered on forward vista roof. Includes routing AC lines down front of vista with cover(s).	$1,127
1515-0040	Heating and air conditioning cab controls shall be located in the lower center dash panel between driver and officer.	$438
1520-0000	Cyclone II medium cab 58" CA	$50,227
1520-0001	Cyclone II long cab 67.5" CA	$55,488
1520-0003	Typhoon long cab 67.5" CA	$33,752
1520-0004	Typhoon Medium cab 58" CA	$31,464

1520-0005	Cyclone II medium cab three door with rear door on officer's side.	$50,227
1520-0006	Cyclone II long cab three door with rear door on officer's side.	$55,488
1520-0008	Cyclone II X medium cab with 58" CA	$48,426
1520-0009	Cyclone II X short cab with 44.5" CA	$51,867
1520-0010	Cyclone II X long cab with 67.5" CA	$53,689
1520-0011	Cyclone II X extended cab with 80" CA	$54,261
1520-0012	Typhoon X long cab with 67.5" CA	$31,950
1520-0013	Typhoon X medium cab with 58" CA	$29,664
1520-0015	Cyclone II X medium cab with ALS provision and 80" CA. Includes exterior hinged ALS doors approx 73" high.	$55,583
1520-0017	Quest long cab with 68" CA	$53,689
1520-0018	Quest medium cab with 58" CA	$48,426
1520-0019	Cyclone II X medium cab with ALS provision, barrier style doors and 80" CA. Includes exterior hinged ALS doors approx 73" high.	$56,283
1520-0020	Quest medium cab with 58" CA and barrier style doors.	$49,126
1520-0021	Typhoon X long cab with 67.5" CA. Includes barrier style doors.	$32,652
1520-0022	Cyclone II X medium cab with 58" CA. Includes barrier style doors.	$49,126
1520-0023	Cyclone II X long cab with 67.5" CA. Includes barrier style doors.	$54,391
1520-0024	Cyclone II X extended cab with 80" CA. Includes barrier style doors.	$54,960
1520-0025	Typhoon X medium cab with 58" CA. Includes barrier style doors.	$30,375
1520-0026	Quest long cab with 68" CA and barrier style doors.	$54,391
1520-0028	Cyclone II X long cab with 67.5" CA. For use with a lowered aerial. Requires full length 4.5" deep trough option.	$60,747
1520-0038	Cyclone II X extended cab with 80" CA. For use with a lowered aerial. Requires full length 4.5" deep trough option.	$58,153
1520-0071	Cyclone II X medium cab with 58" CA. For use with a lowered aerial. Requires full length 4.5" deep trough option.	$52,318
1520-0081	Cyclone II X short cab with 44.5" CA and right hand drive.	$65,020
1520-0087	Cyclone II X short cab 2 door with 44.5" ca. Includes transverse compartment at rear of cab above the front axle accessible from both sides. The compartment is approx 35" wide x 35" high x the width of the cab.	$51,867
1520-0090	Cyclone II X (3) door extended cab with 80" CA. Officer side rear door.	$54,261
1520-0092	Cyclone II X medium cab with 58" CA. Includes barrier style doors. For use with a lowered aerial. Requires full length 4.5" deep trough option.	$53,018
1520-0095	Cyclone II X long cab with 67.5" CA and barrier style doors. For use with a lowered aerial. Requires full length 4.5" deep trough option.	$61,449
1520-0096	Typhoon X extended cab with 80" CA	$35,499
1520-0097	Typhoon X extended cab with 80" CA. Includes barrier style doors.	$36,201
1535-0002	Driver side cab wheel well medical cabinet approximately 42 x 22 (25 Quest) x 28. Includes external locking roll-up door and interior hinged door with locking push-button latch. Cabinet includes (2) adjustable shelves.	$1,843
1535-0003	Officer side cab wheel well medical cabinet approximately 42 x 22 (25 Quest) x 28. Includes external locking roll-up door and interior hinged door with locking push-button latch. Cabinet includes (2) adjustable shelves.	$1,843
1535-0004	Medical cabinet mounted on rear wall of cab 48 x 32 x 24 with a locking roll up door. Lower door opening raised to provide hand clearance.	$3,821
1535-0005	Medical cabinet mounted on rear wall of cab 48 x 40 x 20 with locking roll up door. Lower door opening raised to provide hand clearance.	$3,593
1535-0006	Medical cabinet mounted on rear wall of cab 55X32X19 with a locking roll up door. Lower door opening raised to provide hand clearance.	$2,450
1535-0007	Medical cabinet mounted on rear wall of cab 55 x 40 x 20 with a locking roll up door. Lower door opening raised to provide hand clearance.	$3,055
1535-0012	Medical cabinet mounted on the wheel well driver side of cab 45H x 21W x 24D with a locking roll-up door.	$2,292
1535-0013	Medical cabinet mounted on the wheel well officer side of cab 45H X 21W X 24D with a locking roll-up door.	$2,292
1535-0028	Cab medical storage cabinet(s) finish to be swirled with clear coating.	$1,091
1535-0030	All roll-up medical cabinet doors selected on the cab to be ROM brand.	$119
1535-0032	All medical cabinet RUD in the cab to be locking with 1250 key	$124
1535-0034	All exterior access RUD for medical cabinets to be painted job color. Not available on two tone cabs.	$228
1535-0035	Engine compartment light, LED (EA).	$215
1535-0037	Rear cab wall medical cabinet with side access doors (one each side). Cabinet to be 50" high x 38" wide x 24" deep. Includes (2) locking roll-up doors (satin finish) and (3) adjustable shelves. Lower door openings raised to provide hand clearance.	$2,783

1535-0038	Interior medical cabinet. Locate to rear of engine cover. Cabinet to be 30" high x 38" wide x 20" deep with a locking roll up door. Includes (1) adjustable shelf.	$2,852
1535-0043	Medical cabinet mounted on rear wall of cab 48X32X24 with a locking roll up door and windows in door slats. Lower door opening raised to provide hand clearance.	$4,092
1535-0045	ALS interior - Style "A". Includes forward wall with center locking roll-up door for access from int, small compts up high ea side of ctr opening with glove box latch on driver's side compt and Medco keyed lock on officer's side, strikers high and low on ALS doors, access plts on int panel of ALS doors, approx 5"W x 17"H x 70"L backboard sleeve, two adj shelves ahead of backboard sleeve and a roll-out tray with 36" slides each side on floor.	$7,975
1535-0046	Medical cabinet mounted on rear wall of cab 60X40X23 with a locking roll up door. Lower door opening raised 12" to provide area for rear heaters. Includes lower ventilation, front access and removable sub-floor for additional access.	$2,900
1535-0047	Medical cabinet mounted on the officer side rear cab wall 55(54 non-vista)X18X12 with a locking roll up door. Lower door opening raised to provide hand clearance.	$2,311
1535-0048	Medical cabinet mounted on the driver side rear cab wall 55(54 non-vista)X18X12 with a locking roll up door. Lower door opening raised to provide hand clearance.	$2,311
1535-0049	Louvers for interior medical/ ALS cabinet wall(s) to help cabinet contents to maintain cab interior temperatures. The louvers to be in four sets of three, located two high and two low. Location: [#LOC].	$159
1535-0052	Medical cabinet mounted on rear wall of cab 52" x 40" x 23" with a locking roll up door. Lower door opening raised 4" to provide area for radio installation. Includes lower ventilation and removable sub-floor for additional access.	$2,900
1535-0054	Exterior access roll up doors for medical cabinets to be painted upper cab color.	$228
1535-0057	Driver side cab wheel well medical cabinet approximately 42 x 22 (25 Quest) x 28. Includes external locking pan door painted job color and interior hinged full height door with locking push-button latch. Cabinet includes (2) adjustable shelves.	$2,212
1535-0058	Medical cabinet mounted on rear wall of cab 48X42X20 with angled corners and locking roll up door. Lower door opening raised to provide hand clearance.	$3,593
1535-0059	Brace .75 x 2.75 below medical cabinet shelf	$78
1535-0060	Rear cab wall medical cabinet with side access doors (one each side). Cabinet to be 62" high x 38" wide x 24" deep. Includes (2) locking roll-up doors (satin finish) and (3) adjustable shelves. Lower door openings raised to provide hand clearance.	$2,998
1535-0061	Driver side cab wheel well medical cabinet approximately 42x22(25 Quest)x28. Includes external locking pan door painted job color and interior locking roll-up door with satin finish. Cabinet includes (2) adjustable shelves.	$2,426
1535-0062	Interior medical cabinet. Locate to rear of engine cover. Cabinet to be 30" high x 38" wide x 20" deep with a locking roll up door. Includes (1) adjustable shelf and forward facing drop down door.	$2,935
1535-0063	Officer side cab wheel well medical cabinet approximately 42x22(25 Quest)x28. Includes external locking single door painted job color and interior hinged door with locking push-button latch. Cabinet includes (2) adjustable shelves.	$2,212
1535-0064	Rear cab wall medical cabinet with side access doors (one each side). Cabinet to be 48" high x 38" wide x 24" deep. Includes (2) locking roll-up doors (satin finish) and (3) adjustable shelves. Lower door openings raised to provide hand clearance.	$2,783
1535-0066	Interior medical cabinet. Locate to lower rear of engine cover. Cabinet to be 32" high x 30" wide x 24" deep with single pan double bi-fold doors. Includes (1) vertical and (1) horizontal partition centered in the cabinet, louvered lower side walls and removable lower rear facing panel for installation of heaters.	$2,880
1535-0067	ALS - Side access. Includes compts on each side of cab, access up high each side of interior outboard with glove box latches, strikers high and low on ALS doors, access plts on int panel of ALS doors, extended cab floor and three adj shelves.	$3,181
1535-0068	Rear wall medical cabinets. Includes forward wall and (2) full height, equal width locking roll-up door compts with (3) shelves in each compt.	$8,719
1535-0069	Rear cab wall medical cabinet with side access doors (one each side). Cabinet to be 50" high x 30" wide x 24" deep. Includes (2) locking roll-up doors (satin finish) and (3) adjustable shelves. Lower door openings raised to provide hand clearance.	$2,783
1535-0070	Riser for medical cabinet. Lifts bottom of cabinet up to top of rear wall seat support. Front of riser to be closed, sides to be open. CII X / Typhoon X only.	$639
1535-0071	ALS interior - Style "A". Includes forward wall with center locking roll-up door for access from int, small compts up high ea side of ctr opening with glove box latch on driver's side compt and Medco keyed lock on officer's side, strikers high and low on ALS doors, access plts on int panel of ALS doors, approx 5"W x 17"H x 70"L backboard sleeve, two adj shelves ahead of backboard sleeve and a roll-out tray with 36" slides each side on floor. HCFD.	$17,288
1535-0072	Rear cab wall medical cabinet with side diamond plate access doors (one each side) mounted above support channel on back wall. Cabinet to be 38" high x 47.25" wide x 14" deep. Includes diamond plate doors hinged to the rear with d-ring latches and (2) adjustable shelves.	$2,783

1535-0073	Officer side cab wheel well medical cabinet approximately 42 x 22 (25 Quest) x 28. Includes external locking pan door painted job color and interior hinged full height door with locking push-button latch. Cabinet includes (2) adjustable shelves.	$2,212
1535-0074	All medical cabinet RUD in the cab to be locking with CH751 key.	$124
1535-0075	Driver side cab wheel well medical cabinet approximately 42x22(25 Quest)x28. Includes external locking roll-up door and interior hinged door with locking push-button latch. Cabinet includes (1) adjustable partition installed and (2) adjustable shelves shipped loose in the cabinet.	$1,946
1535-0076	Driver side cab wheel well medical cabinet approximately 42x22(25 Quest)x28. Includes external pan door with locking Tri-Mark latch painted job color and interior full height hinged door with locking push-button latch. Cabinet includes (2) adjustable shelves.	$2,353
1535-0077	Officer side cab wheel well medical cabinet approximately 42x22(25 Quest)x28. Includes external pan door with locking Tri-Mark latch painted job color and interior full height hinged door with locking push-button latch. Cabinet includes (2) adjustable shelves.	$2,353
1535-0078	Interior medical cabinet. Locate to rear of engine cover. Cabinet to be 25.5" high x 30" wide x 23" deep with (2) drop down doors.	$950
1535-0079	All roll-up medical cabinet doors selected on the cab to be Amdor brand.	$119
1535-0080	Officer side cab wheel well medical cabinet approximately 42x22(25 Quest)x28. Includes external locking roll-up door. Cabinet includes (2) adjustable shelves.	$1,649
1535-0081	Driver side cab wheel well medical cabinet approximately 42x22(25 Quest)x28. Includes external locking roll-up door. Cabinet includes (2) adjustable shelves.	$1,649
1535-0082	11"H x 18"W access opening with cargo net cover on driver and officer side wheel well medical cabinets back wall(engine cover side)up high. Includes deflector plate on ceiling to protect roll-up door.	$712
1535-0085	Rear cab wall medical cabinet with side access doors (one each side). Cabinet to be 36" high x 38" wide x 24" deep. Includes (2) roll-up doors (satin finish) and (2) adjustable shelves. Lower door openings raised to provide hand clearance.	$2,783
1535-0086	Driver and officer side cab wheel well medical cabinet approximately 17x23x28. Includes internal locking vertically hinged door. Quest cabs only.	$1,240
1535-0088	Riser for medical cabinet. Approx 40"W x 20"D x 17"H. Front of riser to have a drop down door with two locking latches. Finish to match medical cabinet.	$832
1535-0090	Medical cabinet mounted on rear wall of cab 48X40X23 with a locking roll up door. Lower door opening raised 4" to provide area for radio installation. Includes lower ventilation and removable sub-floor for additional access.	$2,900
1535-0091	Officer side cab wheel well medical/communication cabinet approximately 42x22(25 Quest)x28. Includes external half height locking pan door with Tri-Mark latch painted job color and interior full height opening with cargo netting. Cabinet includes (3) adjustable interior pull-out shelves.	$2,908
1535-0092	Driver side cab wheel well medical/communication cabinet approximately 42x22(25 Quest)x28. Includes external half height locking pan door with Tri-Mark latch painted job color and interior full height opening with cargo netting. Cabinet includes (3) adjustable interior (4) sided trays with 1" lips.	$2,908
1535-0093	Compartment rear side of cab "under riser" type. Approx 22W x 30H opening. Includes double pan hinged door with Tri-Mark locking latches and pass through to bench if equipped. Location: driver and officer side.	$1,200
1535-0094	Driver side cab wheel well medical cabinet approximately 42x22(25 Quest)x28. Includes external pan door with locking Tri-Mark latch painted job color and interior full height opening with cargo net cover. Cabinet includes (2) adjustable shelves.	$2,499
1535-0095	Officer side cab wheel well medical cabinet approximately 42x22(25 Quest)x28. Includes external pan door with locking Tri-Mark latch painted job color and interior full height opening with cargo net cover. Cabinet includes (2) adjustable shelves.	$2,499
1535-0096	Exterior access roll up door for medical cabinet to be painted two-tone to match cab paint break (EA).	$389
1535-0097	Medical cabinet mounted on the wheel well officer side of cab 15.5X24X21 with a vertically hinged door and locking push-button latch.	$913
1535-0100	Medical cabinet mounted on the driver side rear cab wall 55X28X12 with a locking roll up door. Lower door opening raised 12" to provide space for rear heater. Includes lower ventilation, front access and removable sub-floor for additional access.	$2,612
1535-0101	Medical cabinet mounted on the officer side rear cab wall 55X28X12 with a locking roll up door. Lower door opening raised 12" to provide space for rear heater. Includes lower ventilation, front access and removable sub-floor for additional access.	$2,612
1535-0102	Medical cabinet - ALS style side access. Includes compt on officer side of cab, access up high on interior with glove box latch, extended cab floor and three adj shelves. Includes pass-thru under bench seat riser if equipped.	$2,252
1535-0105	Medical cabinet mounted on the officer side rear cab wall 55(54 non-vista)X18X12 with a locking roll up door. Lower door opening raised approx. 12" to provide space for rear wall heaters. Includes louvers and false floor.	$2,311

1535-0106	Medical cabinet mounted on the driver side rear cab wall 55(54 non-vista)X18X12 with a locking roll up door. Lower door opening raised approx. 12" to provide space for rear wall heaters. Includes louvers and false floor.	$2,311
1535-0110	Medical cabinet mounted on the driver side rear cab wall 55(54 non-vista)X20X22 with a locking satin finish roll-up door and (3) adjustable shelves.	$2,418
1535-0111	Medical cabinet mounted on the officer side rear cab wall 55(54 non-vista)X20X22 with a locking satin finish roll-up door and equipment rack.	$2,418
1535-0112	Officer side cab wheel well medical cabinet approximately 42x22(25 Quest)x28. Includes external locking pan door painted job color and interior locking roll-up door with satin finish. Cabinet includes (2) adjustable shelves.	$2,426
1535-0114	Medical cabinet mounted on the wheel well driver side of cab 44HX21WX16D with a locking roll up door.	$2,225
1535-0118	Medical cabinet mounted on rear wall of cab 50X38X12 with locking roll up door. Lower door opening raised to provide hand clearance.	$3,520
1535-0119	Medical cabinet mounted on rear wall of cab 55X40X23 with a locking roll up door. Cabinet floor to be level with top of PTO box on cab floor.	$2,900
1535-0120	Medical cabinet mounted on the officer side rear cab wall full height (as applicable)X 18W X 12D with a locking roll up door. For use with vista cabs only. Lower door opening raised to provide hand clearance.	$2,408
1535-0121	Medical cabinet mounted on rear wall of cab full height (as applicable)X55X22 with locking roll up door. For use with vista cabs only. Lower door opening raised to provide hand clearance.	$3,885
1535-0122	Medical cabinet mounted on the driver side rear cab wall full height (as applicable)X 18W X 12D with a locking roll up door. For use with vista cabs only. Lower door opening raised to provide hand clearance.	$2,408
1535-0124	Medical cabinet mounted on the driver side rear cab wall 55(54 non-vista)X20X22 with a locking satin finish roll-up door and (3) adjustable shelves. Includes lower area raised to accomodate rear wall heater.	$2,420
1535-0125	Medical cabinet mounted on the officer side rear cab wall 55(54 non-vista)X20X22 with a locking satin finish roll-up door, (1) adjustable shelvf and equipment rack. Includes lower area raised to accomodate rear wall heater.	$2,420
1535-0126	Medical cabinet mounted on the wheel well driver side of cab 32H x 21W x 24D with a interior hinged full height door with locking push-button latch; hinged inboard.	$1,952
1535-0127	Louvers for rear wall bench seat riser to help cabinet contents to maintain cab interior temperatures. The louvers to be in three sets of three, located low on forward wall.	$159
1535-0128	ALS - Side access. Includes compts on each side of cab, 16Wx20H access up high each side of interior outboard with locking glove box latches, strikers high and low on ALS doors, access plts on int panel of ALS doors, extended cab floors, smooth plate rear kick plates, one adj shelf and nylatron floor overlay. Includes pass-thru under bench seat if equipped.	$3,181
1535-0129	Reverse hinge driver and officer side ALS compartment door. Includes vertically mounted drip rail along forward area of compartment opening (in addition to the horizontal drip rail above the door opening). Doors to open approx. 110 degrees.	$137
1535-0130	Driver side cab wheel well medical cabinet approximately 42 x 22 (25 Quest) x 28. Includes external locking roll-up door and interior hinged door with locking push-button latch; hinged outboard. Cabinet includes (2) adjustable shelves.	$1,843
1535-0131	Driver side cab wheel well medical cabinet approximately 42 x 24 (27 Quest) x 28. Includes external locking roll-up door and interior hinged door with locking push-button latch. Cabinet includes (2) adjustable shelves.	$1,843
1535-0132	Officer side cab wheel well medical cabinet approximately 42 x 24 (27 Quest) x 28. Includes external locking roll-up door and interior hinged door with locking push-button latch. Cabinet includes (2) adjustable shelves.	$1,843
1535-0133	Cab medical/storage cabinet(s) interior finish to be Zolatone gray.	$328
1535-0135	Driver side cab wheel well medical cabinet approximately 42 x 22 (25 Quest) x 28. Includes external locking roll-up door and interior hinged smoked lexan door with locking push-button latch. Cabinet includes (2) adjustable shelves.	$1,892
1535-0136	Rear cab wall medical cabinet with front and side access doors (one each side). Cabinet to be 42" high x 30" wide x 32" deep (do not notch for support bracket; customer to store backboard(s) above support channel behind cabinet; install mounting bracket above cabinet). Includes (1) locking lower horizontally hinged plate door on front located below roll-up door drums, (2) locking side roll-up doors (satin finish) and (2) adjustable shelves. Lower door openings raised to provide hand clearance.	$3,076
1535-0137	Medical cabinet mounted on the wheel well driver side of cab 45H x 21W x 24D with a locking roll-back (bread box) door.	$2,292
1535-0138	Lock box mounted in the driver side wheel well medical cabinet floor. 14X21X20 with a locking horizontally hinged door. Finish will match interior of cab.	$540

1535-0139	ALS interior with backboard and stokes basket storage. Includes forward wall with (2) outboard locking roll-up doors for access from int, (3) compts up high with glove box latches, strikers high and low on ALS doors, access plts on int panel of ALS doors, (2) approx 5"W x 17"H x 70"L backboard sleeves and stokes basket storage below backboard sleeves on floor.	$8,656
1535-0140	Medical cabinet mounted on the officer side rear cab wall 55(54 non-vista)X18X12 with a locking full height door hinged inboard.	$2,116
1535-0141	Medical cabinet mounted on the driver side rear cab wall 55(54 non-vista)X18X12 with a locking full height door hinged inboard.	$2,116
1535-0143	Lock box mounted on top of the rear wall medical cabinet. 14HX18WX12D with a locking horizontally hinged drop down door. Finish will match interior of cab.	$540
1535-0145	ALS - Side access. Includes compts on each side of cab, strikers high and low on exterior doors, access plts on int panel of exterior doors, full height satin finish Amdor roll-up doors on interior, extended cab floor and three adj shelves.	$4,666
1535-0147	Officer side cab wheel well medical/communication cabinet approximately 42x22(25 Quest)x28. Includes external half height locking pan door with Tri-Mark latch painted job color and interior full height opening with cargo netting. Cabinet includes (1) adjustable shelf.	$2,769
1535-0148	All medical cabinet RUD in the cab to be locking with GEM key lock	$124
1535-0149	Officer side cab wheel well medical cabinet approximately 42x24x28. Includes external locking pan door painted job color and raised boxed interior locking roll-up door with satin finish for a 42" opening. Cabinet includes (2) adjustable shelves. Requires vista cab roof and removal of side windows.	$2,617
1535-0150	Medical cabinet mounted on the wheel well officer side of cab 45H x 21W x 24D with a interior hinged full height door with locking push-button latch; hinged inboard.	$1,952
1535-0152	**(Use 1535-0038)Interior medical cabinet. Locate to rear of engine cover. Cabinet to be 30" high x 38" wide x 20" deep with a locking roll up door. Includes (1) adjustable shelf.	$2,793
1535-0153	Medical cabinet mounted on rear wall of cab 48 x 36 x 20 with a locking roll-back (bread box) door.	$3,593
1535-0154	Medical cabinet mounted on the wheel well driver side of cab 45H x 21W x 24D with a interior hinged full height door with locking push-button latch; hinged inboard.	$1,952
1535-0155	Medical cabinet mounted on the wheel well driver side of cab 45H x 21W x 24D with a locking roll-up door and (2) adjustable shelves.	$2,292
1535-0156	Medical cabinet rear engine cover, bolted to forward facing map box approximately 34Wx25Hx18D. To include one (1) adjustable shelf. Two (2) vertically hinged swing out doors shall allow access (to the rear), the doors shall be raised 6" up from the cabinet's base. The cabinet shall include push-button latching, (2) each door (1) top and (1) bottom.	$1,282
1535-0157	ALS - Side access. Includes compts on each side of cab, strikers high and low on exterior doors, access plts on int panel of exterior doors, satin finish ROM roll-up doors on interior (bottom raised to riser height), extended cab floor and three adj shelves	$4,856
1535-0158	Locking interior medical cabinet plate door (PR). Key type to be 1250.	$137
1535-0159	Medical cabinet mounted on the wheel well officer side of cab 22X21X28 with a vertically hinged door and locking push-button latch.	$913
1535-0160	ALS - Side interior cabinets. Includes full height access doors (raised for heaters if equipped) each side of interior outboard with glove box latches and three adj shelves.	$3,181
1535-0162	Officer side cab wheel well medical cabinet approximately 42 x 24 (25 Quest) x 28. Includes external locking roll-up door and interior cargo net access. Cabinet includes (2) adjustable shelves.	$1,891
1535-0163	Driver side cab wheel well medical cabinet approximately 42 x 24 (25 Quest) x 28. Includes external locking roll-up door and interior cargo net access. Cabinet includes (2) adjustable shelves.	$1,891
1535-0166	The bottom of the medical cabinet(s) within the cab shall have stainless steel trim at the bottom. This kick plate trim shall be 4" in height from the floor and shall be trimmed as required for door opening(s) below 4".	$368
1535-0167	Compartment rear side of cab below floor. Approx 9W x 19.5H opening. Includes double pan hinged doors. Long cab with medium door location only. Location: driver and officer side.	$846
1535-0169	Medical cabinet mounted on rear wall of cab 55X38X16 with a locking roll up door. Lower door opening raised to provide hand clearance.	$2,900

1535-0171	Medical cab contents mounted on the wheel well of cab (cabinet approximately 31"H X 44"W). There shall be a transverse vertical divider approximately 8" rearward of forward wall, used to store a stokes basket. A second vertical divider approximately 10" rearward of the first divider (approximately 18" from forward wall) shall provide transverse storage. A horizontal divider shall be placed between the1st and 2nd vertical partitions, it shall be placed approximately 10" up from the floor to provide approximately a 10" X 10" transverse storage area for the tripod. Above the tripod storage 2 backboards shall be stored with a vertical divider to separate them in 2 transverse storage areas approximately 5" X 21" each (directly above the tripod storage area.. Rearward of the stokes, tripod and backboard transverse storage area the remaining compartment shall be shall be 1/2 transverse depth (or divided left and right). This rearward most area shall not be transverse.	$1,324
1535-0172	Rear cab wall medical cabinet to be 50" high x 38" wide x 24" deep. Includes (1) forward facing locking roll-up door (satin finish) and (3) adjustable shelves. Lower door openings raised to provide hand clearance.	$2,783
1535-0173	ALS - Side access. Includes compartments on each side of cab, strikers high and low on exterior doors. Includes access plates on interior panel of exterior doors, satin finish ROM roll-up doors on interior (bottom raised to riser height), extended cab floor and three adjustable shelves. Cabinet Includes transverse riser with backboard storage. The interior riser jets/protrudes forward between side wall ALS cabinets to allow heaters (if so equipped) not interfere or impede upon transverse storage/ pass-thru of backboards and other equipment stored under the riser in the transverse storage area.	$5,218
1535-0174	ALS door locks - electric. Electric lock for hinged ALS doors. Wire to same electric lock system as other cab doors.	$854
1535-0175	Medical cabinet mounted on rear wall of cab 49 x 40 x 25.5. Side access lower section with cargo net and notch upper forward access with discrete compartment. Includes drop down door.	$3,117
1535-0176	Medical cabinet mounted on rear wall of cab approximately 48 x 38 x 20 with locking roll up door. Lower door opening raised to provide hand clearance. Required with rear outboard fold down seat(s).	$3,593
1535-0177	Compartment rear side of cab "under riser" type. Approx 9W x 30H opening. Includes double pan hinged door and pass through to bench if equipped. Long cab with medium door location only. Location: driver and officer side.	$846
1535-0181	Upper rearward center vista area cabinet. Cabinet to be 48W x Vista Height x 12D. Includes horizontally hinged lift-up door.	$828
1535-0182	Officer side cab wheel well medical cabinet approximately 42 x 24 (27 Quest) x 28. Includes external locking roll-up door and interior cargo net access. Cabinet includes (2) adjustable shelves.	$1,891
1535-0183	Driver side cab wheel well medical cabinet approximately 42 x 24 (27 Quest) x 28. Includes external locking roll-up door and interior cargo net access. Cabinet includes (2) adjustable shelves.	$1,891
1535-0184	Medical cabinet mounted on rear wall of cab 55 x 38 x 20 with a locking roll up door. Lower door opening raised to provide hand clearance.	$3,055
1535-0186	Medical cabinet mounted on rear wall of cab 48 x 40 x 17 with locking roll up door. Lower door opening raised to provide hand clearance.	$3,593
1535-0187	Driver side cab wheel well medical cabinet approximately 42 x 24 (25 Quest) x 28. Includes external locking roll-up door and interior hinged door with locking push-button latch. Cabinet includes (2) adjustable shelves.	$1,843
1535-0188	Officer side cab wheel well medical cabinet approximately 42 x 24 (25 Quest) x 28. Includes external locking roll-up door and interior hinged door with locking push-button latch. Cabinet includes (2) adjustable shelves.	$1,843
1535-0190	All shelves within the medical cabinet(s) shall have the a full perimeter lip IPOS.	$56
1535-0191	All exterior access RUD for medical cabinets to be painted [#COL].	$228
1535-0192	The interior medical cabinet shall include stainless steel trim on the vertical corner of the cabinet where the hinge is attached. The trim shall run full height of the cabinet on this corner. The trim shall be 1" x 1" to protect and dress off this single corner's edge.	$185
1535-0193	Medical cabinet mounted on the wheel well officer side of cab 15.5X24X21 with rear facing cargo netting.	$913
1535-0194	Driver side cab wheel well medical cabinet approximately 42 x 22 (25 Quest) x 28. Includes external locking roll-up door and interior hinged door with locking push-button latch.	$1,653
1535-0195	Officer side cab wheel well medical cabinet approximately 42 x 22 (25 Quest) x 28. Includes external locking roll-up door and interior hinged door with locking push-button latch.	$1,653
1535-0196	Interior medical cabinet. Locate to rear of engine cover. Cabinet to be 27" high x 38" wide x 20" deep with a locking roll up door. Includes (1) adjustable shelf and forward facing drop down door.	$2,935
1535-0197	Driver side cab wheel well medical cabinet approximately 42x22(25 Quest)x28. Includes external lift-up pan door with locking Tri-Mark latch painted job color, pull strap for door and interior full height opening with cargo net cover. Cabinet includes (2) adjustable shelves.	$2,818

1535-0198	Officer side cab wheel well medical cabinet approximately 42x22(25 Quest)x28. Includes external lift-up pan door with locking Tri-Mark latch painted job color, pull strap for door and interior full height opening with cargo net cover. Cabinet includes (2) adjustable shelves.	$2,818
1535-0199	Officer side cab wheel well medical cabinet approximately 42x22(25 Quest)x28. Includes external locking pan door painted job color and interior cargo net.	$2,358
1535-0200	Driver side cab wheel well medical cabinet approximately 42x22(25 Quest)x28. Includes external locking pan door painted job color and interior cargo net.	$2,358
1540-0001	Map box dual storage	$501
1540-0003	For Typhoon chassis only	$460
1540-0004	(Obsolete; see ship loose) Map Box Rectangular Short.	$445
1540-0005	Map Box Rectangular Tall	$471
1540-0006	Map box suspended with drop-down doors.	$517
1540-0007	Map Box with Angle Storage. Angled side to face officer.	$445
1540-0008	Map box suspended with officer's map storage.	$624
1540-0014	All map boxes in the cab to be swirled with clear coat	$517
1540-0015	Map box suspended with drop-down door. Box offset to rear to allow engine access door to open further.	$517
1540-0016	Map box suspended with officer front drop down door with (4) slots and driver rear drop down door with (4) slots.	$614
1540-0017	Map box with angled top on rear of engine cover.	$511
1540-0018	Map Suspended with Officer's Map Storage. (6) storage slots for 4" binders, (1) additional storage slot for county custom map book.	$624
1540-0020	Map box with 3 compartments on rear of engine cover. Forward compartment has angle lift-up door with gas shocks. Rear of box has top and rear compartments with hinged doors.	$1,046
1540-0021	Map box suspended 34" wide with (3) drop down doors.	$614
1540-0022	Map / medical box on rear of engine cover. Officer's side front has map box w/drop down door. Rear has two compts w/vert hinged doors. Left side includes one adj shelf.	$1,897
1540-0023	Map box suspended rear facing with drop down door. Box offset to rear to allow engine access door to open further.	$517
1540-0024	Map / medical box on rear of engine cover. Front has 2 map boxes w/3 horz slots ea and drop down doors. Rear has 2 compts w/vert hinged doors.	$2,114
1540-0025	Map box suspended with officer's map storage.	$624
1540-0026	Locking map box door. Map box door to include a locking push-button latch. Key type to be CH751.	$72
1540-0027	Map box suspended with officer front drop down door with (4) slots and driver rear drop down door with (2) slots.	$614
1540-0028	Map box suspended with full width lower storage and officer's map storage.	$624
1540-0031	Map Box Suspended with Drop Down Door 17H x 34W x 14D. Box offset to rear to allow engine access door to open further.	$625
1540-0032	Map box suspended with driver's map storage.	$624
1540-0034	Map box suspended 37" wide with (3) drop down doors.	$614
1540-0035	Rear engine cover rectangular map box 12H X 13.75W X 31L. Includes (3) slots driver, open center, (2) slots officer side and cargo net cover.	$862
1540-0037	Map box suspended with drop-down doors, 15" H x 37.5" W x 14" D.	$517
1540-0039	Map box / rear engine cover medical cabinet. Includes forward facing map box with 2 drop down doors and incorporated rear engine cover medical cabinet with roll-up door.	$3,985
1540-0040	Map box suspended with drop down doors. 34"W x 10"H x 12"D	$517
1540-0042	Map box suspended with driver and officer front drop down door and officer rear drop down door. Includes (4) slots on officer side and map storage on driver side.	$717
1540-0045	Map box rectangular with rear hinged door. 11"L (front to rear) x 20"W (side to side) x 6"D.	$445
1540-0047	Map box with 3 compartments on rear of engine cover. 2 compartments on top will be hinged back to back. Forward compartment has lift-up door with gas shocks. Rear of box has top and rear compartments with hinged doors. Lower compartment will be approx 7" high.	$1,046
1540-0048	Rear engine cover storage box with cargo net cover. 44"W x 24"H x 14"D with rear facing opening.	$960
1540-0049	Map box suspended with drop down doors. Driver door approx. 15.5"W, officer door approx. 19.5"W. 35"W x 11"H x 13.5"D. (1) vertical partition 4" off officer side, (1) shelf offset to driver side of partition.	$517
1540-0050	Storage box with hinged top and push-button latch. Box to be mounted on rear of engine cover (hinge to forward edge), angled same as upper engine cover. Size: 15"H x 35"W x 7"D. Quest cabs only.	$398
1540-0051	Map box suspended with drop-down doors. 34"W x 9.50"H x 12"D.	$517
1540-0056	Rear engine cover rectangular map box angled to match upper and lower vertical engine cover. 11"H X 12"W (front to rear) X 42.5"L. Includes (6) storage slots approx. 14"L x 6"W with (3) retaining straps front to rear, (1) over each area.	$862
1540-0057	Map box suspended with driver and officer front and rear drop down doors. Includes (4) slots on each side.	$717

1540-0063	Map box suspended with (9) vertical slots.	$624
1540-0064	Map box suspended with (9) vertical slots and (1) full width horizontal slot.	$717
1540-0065	Map box suspended 37" wide with (3) drop down doors.	$711
1540-0066	Map box suspended with officer's map storage. Includes (4) equal slots on officer side and (1) driver slot equal to top officer slot.	$624
1540-0069	Map box suspended 34"W x 6"H x 12"D with driver and officer front and rear drop down doors. Includes (2) slots on each side. Locate just below AC.	$717
1540-0071	Map box suspended with (1) drop down door. 14"W x 9.5"H x 12"D	$479
1540-0073	Map box suspended with drop-down doors and (1) shelf each side. 34"W x 9.50"H x 12"D.	$517
1540-0075	Map box suspended with drop down doors. 34"W x 6"H x 13.5"D	$517
1540-0079	Map box suspended with drop-down doors. Approximately 34"W x 9.50"H x 13"D.	$709
1540-0080	Map box suspended with drop-down door installed on the rear of the box to provide accessibility from the rear. Box offset to rear to allow engine access door to open further.	$517
1550-0001	Map pockets cab front doors diamond plate	$168
1550-0002	Map pockets cab front doors stainless steel.	$138
1550-0007	All cab exterior access doors to have CH751 keyed locks.	$166
1550-0008	Fixed rear cab wall windows (pr). Not available with side mount pump module applications.	$109
1550-0009	Fixed rear cab wall narrow windows (pr).	$106
1550-0010	Sliding rear cab wall windows (pr). Windows are drop style and not available with side mount pump module applications.	$242
1550-0011	Rear crew cab door windows. Includes manual roll-down actuation. Not available with paddle style door latching.	$993
1550-0013	Driver and Officer door windows. Includes electric roll-down actuation. Each door to be individually controlled and the driver side is to have control for all electrically actuated windows.	$1,376
1550-0014	Rear crew cab door windows. Includes electric roll-down actuation. Each door to be individually controlled. Not available with paddle style door latching.	$1,376
1550-0015	Stainless steel protective trim on rear edge of cab door openings. E-ONE custom chassis only.	$209
1550-0017	Cab door panels stainless steel.	$1,228
1550-0018	Scuff plates stainless steel (Set). Not available with paddle latches.	$97
1550-0019	Windows cab side sliding driver side.	$247
1550-0022	Cab roof vent with fan (pair). Each vent switched next to vent. Location: (1) each side centered above rear cab doors.	$751
1550-0023	Windows rear sliding vista. Requires raised roof option	$407
1550-0024	All cab doors shall have exterior paddle latches.	$573
1550-0029	Map pockets cab rear doors diamond plate	$144
1550-0030	Map pockets cab rear doors, stainless steel.	$175
1550-0032	Windows cab side sliding officer side.	$247
1550-0037	(4) Incandescent cab step area lighting. Locate each light in [#LOC]. Lights to be switched with door ajar.	$144
1550-0038	(4) LED cab step area lighting. Locate each light [#LOC]. Lights to be switched with door ajar.	$569
1550-0039	Door mounted red incandescent flashing lights (4). Locate lights [#LOC]. Lights to be switched with door ajar.	$144
1550-0040	Door mounted red LED flashing lights (4). Locate lights [#LOC]. Lights to be switched with door ajar.	$341
1550-0041	Door mounted amber incandescent flashing lights (4). Locate lights [#LOC]. Lights to be switched with door ajar.	$144
1550-0042	Door mounted amber LED flashing lights. Locate lights [#LOC]. Lights to be switched with door ajar.	$341
1550-0043	All cab door kick plates to be made from smooth plate aluminum with DA finish.	$280
1550-0045	All cab door kick plates to be made from stainless steel plate.	$587
1550-0046	Canadian flag reflective material in place of striping for lower interior cab doors.	$84
1550-0047	All (4) cab doors to have double strap. Straps to be sewn together.	$137
1550-0050	All cab exterior cab locks to be keyed for #CH751 locks. Orange County.	$246
1550-0053	Aluminum interior rear cab door handrails (PR) IPOS.	$306
1550-0054	All cab exterior access doors to have 1250 keyed locks.	$531
1550-0055	Door mounted Whelen 500 series red TIR6 LED flashing lights (4) w/clear lenses. Locate lights [#LOC]. Lights to be switched with door ajar.	$1,144
1550-0056	Cab door insert (ea) - Carbon fiber style. Quest cab only.	$213
1550-0057	Cab door insert (ea), stainless steel. Quest cab only.	$312
1550-0061	Rear crew cab door window. Includes electric roll-down actuation. Not available with paddle style door latching. For use with 3 door cab only.	$690
1550-0063	(3) LED cab step area lighting. Locate each light in [#LOC]. Lights to be switched with door ajar.	$428
1550-0066	Cab door kickplates fastened with screws.	$218
1550-0067	[#COL] chevron "V" stripe on lower cab door panel approx 18" high. Stainless steel door panels only. CIIX and TyphoonX only.	$271

1550-0069	Reflective [#COL] 3M Diamond Grade striping positioned in the "A" formation located in the lower cab door panels.	$274
1550-0071	ABS cab door panels and lower kick panels to be fastened with screws. No drive rivets.	$363
1550-0072	Cab door panels aluminum painted Zolatone gray.	$1,228
1550-0073	[#COL] chevron "A" stripe on lower cab door panel approx 18" high. Stainless steel door panels only. CIIX and TyphoonX only.	$271
1550-0074	[#COL] chevron "A" stripe on entire lower cab door kick plate. Stainless steel or smooth plate kick plates only. CIIX and TyphoonX only.	$271
1550-0075	Door mounted red LED flashing lights (3). Locate lights [#LOC]. Lights to be switched with door ajar.	$257
1550-0078	Map pockets 14 gauge stainless steel. Includes vinyl trim around top of opening and nylon strap with snap to retain contents. Location: front cab doors.	$371
1550-0080	[#COL] chevron "A" stripe on lower cab door panel approx 12" high. Stainless steel door panels only. CIIX and TyphoonX only.	$271
1550-0081	Cab door locks - electric. Includes driver side exterior touchpad, (2) remote key fobs, barrel style key lock on exterior of each door and manual interior lock on each door.	$1,092
1550-0085	All cab exterior access doors to have J236 keyed locks.	$531
1550-0086	Door mounted red LED flashing lights (2). Locate lights [#LOC]. Lights to be switched with door ajar.	$172
1550-0087	[#COL] Diamond Grade chevron "A" stripe on lower cab door panel approx 12" high. Stainless steel door panels only. CIIX and TyphoonX only.	$449
1550-0088	[#COL] chevron 2" "A" stripe on lower cab door panel approx 12" high. Stainless steel door panels only. CIIX and TyphoonX only.	$271
1550-0096	Door mounted Whelen amber M6AC LED flashing lights (4) w/clear lenses. Lights to alternate flash top and bottom on each light. Locate lights [#LOC]. Lights to be switched with door ajar.	$1,227
1550-0098	Stainless steel protective trim on rear edge of cab door openings. E-One Quest chassis only.	$209
1550-0099	Scuff plates stainless steel (Set). Approx. 7"x7" to encompass door handle and lock. Not available with paddle latches.	$210
1550-0100	Polished stainless steel protective trim on rear edge of cab door openings. E-ONE custom chassis only.	$232
1550-0101	Polished stainless steel scuff plates for exterior cab door handles (set). Not available with paddle latches.	$100
1550-0102	Rear crew cab door windows with rear fixed panel. Includes electric roll-down actuation. Each door to be individually controlled. For use with paddle style door latching.	$1,543
1550-0103	Rear crew cab door windows with rear fixed panel. Includes manual roll-down actuation. For use with paddle style door latching.	$1,160
1550-0106	[#COL] chevron "A" stripe on lower cab door panel approx 24" high. Stainless steel door panels only. CIIX and TyphoonX only.	$271
1550-0107	[#COL] chevron "A" stripe on lower cab door panel approx 6" high. Stainless steel door panels only. CIIX and TyphoonX only.	$193
1550-0108	Stainless steel protective trim on rear edge of rear cab door openings. E-ONE custom chassis only.	$105
1550-0109	[#COL] Diamond Grade chevron "A" stripe on lower cab door panel approx 18" high. Stainless steel door panels only. CIIX and TyphoonX only.	$449
1550-0114	Map pockets cab front doors aluminum plate painted Zolatone gray.	$157
1550-0115	Map pockets cab rear doors aluminum plate painted Zolatone gray.	$157
1550-0116	Cab door locks - electric; 2DR cab only. Includes driver side exterior touchpad, (2) remote key fobs, barrel style key lock on exterior of each door and manual interior lock on each door.	$844
1550-0117	Scuff plates stainless steel (PR) door lock. For use with paddle latches.	$49
1550-0120	Door panels cab alum painted Zolatone black.	$1,228
1550-0121	Cab door strap one (1) additional to standard straps shall be provided. Location: One (1) each cab door.	$132
1550-0127	Door mounted Whelen M4RC LED flashing lights (4) w/clear lenses. Locate lights [#LOC]. Lights to be switched with door ajar.	$1,125
1550-0128	(4) Whelen LED cab step area lighting. Locate each light [#LOC]. Lights to be switched with door ajar.	$738
1550-0129	Enclosures for electric door window actuation switch(s) shall be stream lined, (1) switch behind another (not side by side) mounted in an enclosure to match the door's interior IPOS. Each door to be individually controlled. The driver shall have control for all electrically actuated windows.	$216
1550-0130	Stainless steel protective trim on rear edge of rear ALS cab door openings. E-ONE custom chassis only.	$105
1550-0131	Removable access panel on each cab door to the regulator and latch.	$463

1550-0132	Driver and Officer door windows. Includes electric roll-down actuation. Each window to be individually controlled at each door. Each window switch will be flush mounted as far forward on the door as possible with minimal or no switch mounting protrusion. The driver side will NOT have controls for all electrically actuated windows but rather a single switch for the driver door window only.	$1,568
1550-0134	Polished stainless steel trim on bottom edge of the over wheel cab compartment opening (ea).	$32
1550-0135	Stainless steel trim on the vertical edge of the over wheel cab compartment opening (ea).	$44
1550-0136	Polished stainless steel trim on the vertical edge of the over wheel cab compartment opening (ea).	$58
1550-0137	A removable access panel shall be incorporated into the interior cover panel(s) of each cab door to permit easy access to the latch mechanism.	$463
1550-0138	Door mounted Whelen M2 red super LED flashing lights (4). Locate lights on each cab door in the outboard position. Each individual light shall be activated by the corresponding cab door ajar circuit.	$1,006
1550-0139	Each cab door shall have stainless steel trim on the trailing edge of the door to include forward door wheel well (radius) area. E-ONE custom chassis only.	$362
1550-0140	Reflective [#COL] 3M Diamond Grade striping positioned in the "A" formation located in the lower cab door panels, extending approximately 14" from the door's bottom.	$320
1550-0141	Polished stainless steel protective trim to wrap cab door jambs on all (4) entry doors. Trim to extend 3" past closed door edge. E-One custom chassis only.	$1,035
1550-0142	The cab door inserts shall have the fastening hardware upgraded to nutserts and stainless steel hardware IPOS.	$52
1550-0143	Reflective [#COL] 3M Diamond Grade striping positioned on the upper SS insert IPO lower door area.	$411
1550-0144	Reflective [#COL] individual striping positioned in the "A" formation located in the lower cab door panels.	$199
1550-0145	[#COL] chevron "A" individual stripes on lower cab door panel approx 18" high. Stainless steel door panels only. CIIX and TyphoonX only.	$300
1550-0146	[#COL] chevron "A" individual stripe on lower cab door panel approx 12" high. Stainless steel door panels only. CIIX and TyphoonX only.	$300
1550-0147	Location - Front door map pockets shall be located approximately 17" below window.	$93
1615-0001	Vista full height rear doors, 12".	$3,278
1615-0002	Vista full height rear doors 16".	$3,432
1615-0003	Vista full height rear doors 20".	$3,586
1615-0015	Diamond plate overlay front of vista slope.	$432
1615-0016	Cab roof to have a 4.5" deep x 44" wide trough for lowered aerial.	$514
1615-0019	Vista full height rear doors 20". Includes 4" cap for a 24" total raised roof.	$4,869
1615-0020	Side vista roof windows behind rear doors. 80" cab with medium doors only.	$109
1615-0021	Split raised rear cab roof. 12" high for use with rear mount aerial.	$5,087
1615-0022	Cab roof to have 12" high split raised rear section with full length center waterway trough. For use with rear mount aerial.	$5,087
1615-0023	Cab roof to have 12" high split raised rear section with full length center waterway trough. Inboard vertical surfaces tapered outward for use with HP100 Platform.	$5,087
1615-0025	Cab roof to have a 4.5" deep x 44" wide trough with 1.5" deep side notches for lowered HP100 Platform.	$639
1615-0027	Cab roof to have 12" high split raised rear section and a 4.5" deep x 44" wide trough for rear mount lowered aerial. Trough shall utilize aluminum embossed diamond plate (IPO smooth plate).	$5,601
1620-0000	Overlay the painted grille with stainless steel	$308
1620-0002	Stainless steel grille for Typhoon X.	$813
1620-0003	Stainless steel grille for Typhoon	$813
1620-0006	CIIX stainless steel grille for Typhoon X.	$813
1640-0000	Step below cab door. Located [#LOC]. Steps under front cab doors shall not interfere with approach angle.	$208
1640-0016	Step below cab door; stirrup style without back wall. Located [#LOC]. Steps under Front Cab doors shall not interfere with Approach Angle.	$208
1640-0018	Step below cab door; smooth plate with gator grip painted black durabak. Located [#LOC]. Steps under front cab doors shall not interfere with approach angle.	$274
1640-0026	Removable bottom panel on cab steps.	$197
1640-0028	Step below cab door Zico VS-20-5 elect swing out/down. Step to extend when door is opened and retract when closed. Steps shall be flush with outter edge of cab when stowed. Location: Each cab door	$1,395
1640-0029	Each cab step well's kick plates and steps shall be aluminum smooth plate IPO diamond plate and all surfaces painted black durabak up to and below cab floor level. All step surfaces provided with a multi-directional, aggressive gripping surface (Gator Grip) incorporated into the aluminum smooth plate.	$549

1640-0030	Each cab step well's kick plates and steps shall be aluminum smooth plate IPO diamond plate and all surfaces painted Gray Zolatone up to and below cab floor level. All step surfaces provided with a multi-directional, aggressive gripping surface (Gator Grip) incorporated into the aluminum smooth plate.	$549
1640-0031	Each cab step well's kick plates and steps shall be aluminum smooth plate IPO diamond plate and all surfaces painted Black Scorpion (rough finish) up to and below cab floor level. All step surfaces provided with a multi-directional, aggressive gripping surface (Gator Grip) incorporated into the aluminum smooth plate.	$549
1640-0032	Step below cab door Zico VS-20-5 elect swing out/down. Step to extend when door is opened and retract when closed. Steps shall be flush with outter edge of cab when stowed. Location: Front cab doors.	$1,395
1670-0001	Ramco 6001FFR mirrors. Remote controlled with top CAS750 convex. Location: [#LOC].	$1,395
1670-0002	Ramco 6001MCR mirrors. Remote controlled with bottom convex. Location: [#LOC].	$1,108
1670-0003	Velvac 2010 mirrors. Door mounted west coast style with remote control and heat.	$594
1670-0007	3" Extension for Ramco Mirrors	$144
1670-0008	4.5" Extension for Ramco Mirrors.	$144
1670-0010	Retrac West Coast mirrors mounted on cab doors.	$272
1670-0013	Both cab mirrors to be heated.	$271
1670-0015	Velvac 2010 mirrors with marker lights. Door mounted west coast style with remote control and heat.	$626
1670-0017	Mirror Stainless Steel 8" Convex above officer side cab brow, Bell Type Mounting, 2 Piece Adjustable Telescoping Arm. Head #983, Arm #3983	$81
1670-0018	Velvac mirrors model 2025 with LED directional arrows. Door mounted (bottom mount) with remote control and heat.	$1,021
1670-0019	Ramco 6001CCR-750 mirrors. Remote controlled with bottom convex and top CAS750 convex. Location: [#LOC].	$1,485
1670-0021	Ramco 6001FFR mirrors. Remote controlled with CAS750R top remote convex. Location: [#LOC]	$1,612
1670-0023	Mirror Stainless Steel 8" Convex above driver side cab brow, Bell Type Mounting, 2 Piece Adjustable Telescoping Arm. Head #983, Arm #3983	$81
1670-0028	Rosco AccuStyle 818 door mounted mirrors (bottom mount). Chrome w/LED turn signals, remote, heated and convex.	$1,027
1670-0031	2" Extension for Ramco Mirrors	$144
1670-0032	Ramco 6001FFR mirrors. Remote controlled with top CAS750 convex and LED turn signals. Location: [#LOC].	$1,863
1670-0035	Ramco 6001FFR mirrors with INVUE camera. Remote controlled with top CAS750 convex. Location: [#LOC].	$2,462
1670-0036	Ramco 6001MCR mirrors with INVUE camera. Remote controlled with bottom convex. Location: [#LOC]	$2,462
1670-0038	Lang Mekra mirrors w/LED marker lights and turn signals. Door mounted west coast style with convex, remote control and heat.	$1,204
1670-0039	Moto mirrors model 340530. Door mounted with driver heat; officer remote control and heat.	$1,000
1670-0044	Ramco 6001FFR mirrors with INVUE camera and LED turn signals. Heated/remote controlled flat glass with heated/remoted controlled top CAS750 convex. Location: [#LOC].	$2,394
1670-0046	Ramco 6001MCR mirrors. Remote controlled with bottom convex and LED turn signals. Location: [#LOC].	$1,375
1670-0048	Retrac Aerodynamic remote heated mirrors (PR) mounted on cab doors.	$1,085
1670-0052	Ramco 6000-PCHR mirrors. The mirrors shall incorporate heated and remote for both flat and convex using (2) Ramco model ELE-310 switches. Location: [#LOC].	$1,614
1670-0053	Moto mirrors model 8-2386. Door mounted with remote control and heat.	$843
1675-0001	Stainless steel trim belt on front of cab. Location: [#LOC].	$430
1675-0005	Cab roof vent with-out fan (pair). Location: (1) each side centered above rear cab doors.	$335
1675-0006	Vent w/fan roof mounted, pair.	$751
1675-0014	SCBA bottle storage, two driver side of cab behind rear door with cast doors.	$662
1675-0015	Cab roof mounted diamond plate 3 sided light tower shield with 45 degree front slope.	$852
1675-0016	Cab roof mounted painted job color 3 sided light tower shield with 45 degree front slope.	$1,061
1675-0020	Auto eject stainless steel scuff plate.	$84
1675-0022	Pair of 18" handrails located just behind driver and officer front door one each side.	$333
1675-0023	Pair of 18" handrails located just behind driver and officer rear door (ALS doors if equipped) one each side.	$333
1675-0024	Pair of 36" handrails located just behind driver and officer rear door (ALS doors if equipped) one each side.	$363
1675-0025	SCBA bottle storage, two officer side of cab behind rear door with cast doors.	$662
1675-0030	Mud flaps, front, black with E-ONE logo.	$140
1675-0033	Chrome fire bell with eagle. Location: Officer's side of front bumper extension.	$1,246
1675-0034	Cab driprail drain holes. The driprail just before the vista roof begins to have a drain hole provided (one each side of cab).	$77

1675-0035	Belt size tag. Install next to fluid capacity tag. Tag to provide belt sizes for all belts provided.	$93
1675-0036	Cab wheel well liners. The cab wheel well liners to be aluminum IPO ABS plastic. Paint job color.	$538
1675-0038	Sign plate smooth 30" x 30" mounted on cab roof (vista if equipped). Color: [#COL].	$214
1675-0039	Pair of 48" handrails located just behind driver and officer rear door (ALS doors if equipped) one each side.	$417
1675-0041	Stainless steel trim belt low on sides of cab.	$1,274
1675-0042	Rear cab wall to be smooth 3/16" aluminum plate. Cab wall to be finish painted to match the cab paint scheme.	$313
1675-0045	Hansen white LED cab handrails upgrade (EA).	$175
1675-0048	Rear cab wall to be smooth 3/16" aluminum plate with a diamond plate overlay.	$392
1675-0053	Stainless steel scuff plates full height on rear cab corners (PR)	$216
1675-0054	Sign plate smooth 18"x28" mounted one each side cab roof (vista if equipped). Color: [#COL]	$425
1675-0055	Radio box 18W x 12H x 10D. Location: Centered up high of vista area recessed on the rear exterior cab wall with door hinged to the bottom.	$451
1675-0056	Stainless steel scuff plates on rear cab roof corners (PR)	$163
1675-0057	Mounting plate for battery charger receptacle and indicator - removable brushed stainless steel.	$255
1675-0058	Chrome fire bell with gold eagle. Location: Officer's side of front bumper extension.	$1,312
1675-0059	Rear cab wall to be smooth 3/16" aluminum plate with swirl plate overlay.	$644
1675-0060	Sign plate smooth 40" x 80" mounted on cab roof (vista if equipped). Color: [#COL]	$616
1675-0061	Cab roof mounted 4 sided light tower shield painted job color.	$1,380
1675-0062	Electric chrome fire bell with eagle. Location: Driver's side of front bumper extension. Includes switch on officer side overhead console.	$1,743
1675-0063	Mud flaps, front, black without logo.	$143
1675-0066	Skid plate under each lower step. Quest cab only.	$386
1675-0067	Cab roof mounted 3 sided light tower shield painted two-tone job color.	$1,061
1675-0071	Remove side grille from wheel well areas of the cab. TyphoonX cab only.	$211
1675-0072	(4) roof mounted (welded) sign plate mounting points. Mounts to space roof sign plate off cab roof and allow for easy removal.	$248
1675-0073	Hose deflector pin to protect Q2B on front bumper extension.	$185
1675-0074	Cab roof mounted 3 sided light tower shield with welded sides and painted job color with 45 degree front slope.	$1,255
1675-0075	Cab roof mounted painted job color 3 sided light tower shield with 90 degree front slope.	$1,061
1675-0076	Cab roof mounted diamond plate 3 sided light tower shield with 90 degree front slope.	$852
1675-0077	Storage box on rear cab roof 48W x 48L x 12H with 4-sided lid painted two-tone job color (if applicable)	$1,734
1675-0078	Hansen red LED cab handrails upgrade (EA).	$175
1675-0079	Diamond plate storage box for Little Giant model 17 on rear cab vista roof. Includes drop down door with push button latches and nylatron on floor.	$1,269
1675-0082	Stainless steel scuff plates full height on Quest rear cab corners (PR).	$392
1675-0085	Under riser half depth roll-out trays. Includes cab floor extensions. Requires riser height exterior compartments.	$1,126
1675-0086	Raised cab wheel wells for low OAH applications.	$390
1675-0087	Pair of handrails (8" driver and 18" officer) located just behind driver and officer front door.	$431
1675-0088	Fluid capacity tag to include filter model numbers for engine oil, transmission, fuel, air, hydraulic and coolant. Tire size front and rear to be included on tag.	$93
1675-0089	Radio box 18W x 12H x 10D. Location: Up high center rear wall panel offset to driver side of vista area recessed on the rear exterior cab wall with door hinged to the bottom. Includes rubber bumpers on upper corners of door.	$451
1675-0090	Light tower riser ahead of vista. For use with large towers. Installed tower to not exceed over all height of vista roof.	$1,547
1675-0093	Grille on side of cab over wheel (PR). Grilles are non-venting and for cosmetic purposes only. Includes black-out surface behind grilles.	$219
1675-0094	Microphone/Speaker box. 11"H x 9"W x 6.5"D Location: Centered up high recessed on the rear vista exterior cab wall with vertically hinged door.	$451
1675-0095	Diamond plate storage box on rear cab roof 80W x 36D x 14H with lid.	$1,534
1675-0098	Rear cab door handrail package. Includes exterior mounted 18" extruded aluminum handrail driver side located just behind rear door and interior mouned rubber covered grab handle officer side at rear of opening.	$262
1675-0099	SCBA bottle storage (4) officer side of cab behind rear door with cast door. Upper storage compt will be spaced up above lower three due to rear wall support. N/A with exterior cab handrail (requires inside grab rail).	$1,324
1675-0109	Polished stainless steel scuff plates full height on Quest rear cab corners (PR).	$392
1675-0110	Cab exterior hand rails to use Austin Hardware model GR-002-AL-BRT-144 knurled bright anodized aluminum tubes IPOS.	$111
1675-0116	Brushed stainless steel scuff plates for cab handrails (PR).	$182

1675-0118	Fluid capacity tag to include lug nut torque specs for front and rear wheels in addition to required information.	$93
1675-0123	Chrome fire bell laser etching. Requires design provided in digital format. One side only.	$556
1675-0124	Additional fluid capacity tag in French.	$93
1675-0125	Mounting plate for battery charge receptacle, indicator and air auto eject receptacle - removable brushed stainless steel.	$255
1675-0126	Diamond plate storage box on rear cab roof 70W x 40D x 8.5H with lid.	$1,534
1675-0130	Mounting plate for battery charge receptacle, indicator, air auto eject receptacle and block heater receptacle - removable brushed stainless steel.	$255
1675-0132	Customer supplied fire bell for dealer installation. Includes: bracing under extended front bumper extension, bulk head fiting and pull cable. Location: Officer's side of front bumper extension.	$384
1675-0133	Rear cab and vista glass (if so equipped) to be dark tint (smoked glass) IPOS. Includes all glass rearward of front cab doors.	$506
1675-0134	Cab wheel well liners. The cab wheel well liners to be aluminum with sanded finish IPO ABS plastic.	$438
1675-0135	Sign plate smooth with sanded finish 20" x 20" mounted on cab roof forward of vista.	$214
1675-0136	Radio box 18W x 14H x 12D. Location: Up high center rear wall panel of vista area recessed on the rear exterior cab wall with door hinged to the bottom. Includes rubber bumpers on upper corners of door.	$451
1675-0138	Cab roof mounted 3 sided roof mounted AC shield with 45 degree front slope painted two-tone job color.	$870
1675-0140	Cab roof mounted diamond plate 3 sided AC shield with 45 degree front slope.	$661
1675-0144	Pair of 24" handrails located just behind driver and officer front door one each side.	$349
1675-0145	Diamond plate cover to protect the air conditioner lines on the cab roof.	$199
1675-0146	Polished stainless steel scuff plates full height on rear cab corners (PR).	$392
1675-0147	Electric chrome fire bell with eagle. Location: Driver's side of front bumper extension. Includes switch on officer side dash.	$1,743
1675-0149	The battery charger receptacle mounting plate shall be fabricated using 3/16" aluminum smooth plate. It shall be painted to match cab two tone job colors and align with the paint break as mounted.	$125
1675-0151	Pair of 24" handrails located in the interior of driver and officer rear doors. The handrails shall be mounted on the rear wall. If equipped with an ALS cabinet the handrails shall be mounted on the ALS interior surface, outboard of the ALS access door within easy reach of rear door entry personnel.	$347
1675-0152	Sign plate smooth 40" x 40" mounted on cab roof (vista if equipped). Color: [#COL].	$285
1675-0153	SCBA bottle storage two driver and officer side of cab behind rear door with 3/16" plate doors painted job color.	$1,324
1675-0156	Polished stainless steel scuff plates full height on Quest rear cab corners (PR) to provide protection of painted surface(s) from quartz lighting as well as hose and or equipment as it is being removed from apparatus.	$392
1675-0158	Backboard storage compartment for (1) board. Includes retaining strap for board. Loc: [#LOC].	$621
1675-0159	Mounting plate for battery charge receptacle, indicator and block heater receptacle - removable brushed stainless steel.	$255
1675-0160	Backboard storage compartment for (1) board. Includes (2) hinged doors (1) each side with (2) push button latches for each door. Loc: [#LOC].	$758
1675-0161	Escape hatch located on rear cab roof.	$1,120
1675-0162	Cab roof vent with-out fan (pair). Location: (1) each side offset above driver and officer.	$335
1675-0163	Storage box (additional) to house light tower controls/tether, mounted on the rear of the cab roof offset to the driver side (exterior). The storage box shall be constructed of tread plate, include a drop down door tied into the door ajar circuit and thumb latch(s).	$324
1675-0164	Cab roof mounted painted job color 3 sided light tower shield with 45 degree front slope to match the height of the light tower in the bedded position (+1" -0").	$1,157
1675-0166	Cab roof mounted painted job color 3 sided light tower shield with 45 degree front slope. Located rearward on flat roof (non vista). Placement to allow 45 degree shield to be placed in normal vista rise location to allow cab to appear to have vista roof.	$1,154
1675-0167	Sign plate mounted to the full width front bumper center hose tray lid. Smooth plate painted FLNA4145 Black sized according to space available.	$158
1675-0168	Sign plate smooth 30" x 45" mounted on cab roof (vista if equipped). Color: [#COL].	$285
1675-0169	Door single vertically hinged painted with Tri-Mark latch. Location(s): driver side canopy area of cab.	$830
1680-0000	Air intake emergency shut-down. Dash mounted guarded switch.	$1,455
1680-0001	Block heater 1000 watt.	$458
1680-0002	Block heater 1500 watt. Available on ISM, ISX and S60 only.	$469
1680-0005	Thermatic fan clutch.	$1,273
1680-0006	Drivelines 1710.	$948
1680-0007	Drivelines 1810. Required on 1550 lb/ft torque engines.	$1,485

1680-0008	Tow eyes front painted below bumper/cab (PR).	$238
1680-0009	Tow eyes front stainless steel below bumper / cab (PR).	$600
1680-0010	Tow eyes front stainless steel mounted in up position. Requires 16" minimum bumper extension on custom chassis and 18" minimum bumper extension on commercial chassis.	$600
1680-0011	Tow eyes rear below body, painted.	$550
1680-0012	Tow eyes rear frame painted.	$489
1680-0013	Tow hooks front stainless steel in down position. Requires extended bumper on commercial chassis. If Non-Extended bumper on Comm. Chassis, tow hooks are to be ordered with chassis.	$718
1680-0014	Tow hooks front stainless steel mounted up. Requires 12" minimum bumper extension on custom and commercial chassis.	$718
1680-0015	Trailer hitch Class III mounted rear.	$875
1680-0016	Exhaust end chrome plated. Due to high heat from current emission exhaust systems, dis-coloring of exhaust end may occur after prolonged use.	$233
1680-0017	Hotshift PTO.	$1,768
1680-0021	Exhaust end for Plymovent. For exhaust extraction system.	$243
1680-0022	Auto lube system Vogel. Chassis points only.	$3,777
1680-0042	Tow hooks front painted in the down position.	$247
1680-0051	Aerial hydraulic activation system.	$1,141
1680-0053	Storage below rear bench seat. (1) hinged door on each side of the bench seat.	$547
1680-0056	Cold weather pkg for cab. Includes (2) 8" fans, fan clutch, additional insulation on the front wall and insulation on rear cab heater hose lines (if equipped).	$3,023
1680-0066	Vogel auto lube system for chassis points (up to 26) and jack system points (12).	$5,099
1680-0076	Under front bumper 9K winch receiver. Includes electrical connection for portable winch application. Custom chassis only.	$1,662
1680-0079	Pressure Sensing Governor DDEC Engine - Required with Fire Commander	$1,213
1680-0080	Tow eyes front painted in up and down position. Tow eyes to use same holes for both sets.	$475
1680-0082	The air intake emergency cable reset. Officer side of cab below the front bumper. Locate so cable is not visible or can be pulled without reaching under the bumper.	$192
1680-0087	Radiator brush guard below cab.	$535
1680-0091	Tow eyes front stainless in up position and painted in down position. Tow eyes to use same holes for both sets.	$835
1680-0092	Tow blocks under front bumper extension.	$288
1680-0093	Tow eyes front stainless steel with 3" holes mounted in up position. Requires 16 inminimum bumper extension on custom chassis and 18 in minimum bumper extension on commercial chassis.	$809
1680-0095	Side underbody 9K winch receivers. Includes (2) side facing- (1) each below rearward body compartments for portable winch with electrical connection for winch.	$1,405
1680-0096	Side underbody 9K winch receivers. Includes (2) side facing- (1) each below body compartment ahead of the rear wheels for portable winch with electrical connection for winch. With this assembly the compartments will need to be notched.	$1,405
1680-0099	Block heater 1500 watt wired through inlet receptacle. Available on ISM, ISX and S60 only	$469
1680-0116	Oil pan heater. Fleetguard 22MM 150W/120V wired to shoreline.	$435
1680-0118	Cold Weather Pkg for Cab. Includes fan clutch and additional insulation on the front wall and insulation on rear cab heater hose lines (if equipped).	$2,693
1680-0120	Under the body there shall be equipped with a pair of receiver assemblies, each with a removable swivel hoist ring. One each side of apparatus. The receivers shall be square steel tubing, same size as a receiver for a Class III trailer hitch. Located behind the rear axle.	$3,076
1680-0121	Under the body there shall be equipped with a pair of 12,000 lb receiver assemblies, each with a removable swivel hoist ring, or can be used with a Class III trailer hitch. One each side of apparatus. The receivers shall be locate in front of rear axle. Final location will depend on Engineering and driveline. 12v not included.	$3,076
1680-0126	Block heater 1000 watt wired through inlet receptacle (or block heater auto eject inlet receptacle if so equipped).	$458
1680-0127	Block heater thermostat.	$237
1680-0131	Tow eyes rear frame stainless steel.	$1,155
1680-0134	Fuel tank steel skid plate. For use with 50/65 gal tanks. Includes front corner, bottom and rear corner of tank.	$1,058
1680-0137	Diesel Exhaust Fluid (DEF) 10 gallon tank. Location: [#LOC].	$1,405
1680-0145	Diesel Exhaust Fluid (DEF) 5 gallon tank. Location: [#LOC].	$1,334
1680-0154	Oil pan heater - Fleetguard 150W/120V wired to block heater receptacle. ISC/ISL only.	$379
1680-0181	Oil pan heater - Fleetguard 300W/120V wired to block heater receptacle. ISM only.	$481
1680-0186	Under the body there shall be equipped with a pair of receiver assemblies, each with a removable swivel hoist ring. One each side of apparatus. The receivers shall be square steel tubing, same size as a receiver for a Class III trailer hitch. Located to rear of front outriggers.	$3,076
1680-0187	On-Spot tire chain installation. Requires pre-wire option located in Cab Electrical.	$2,517

1680-0188	Aerial hydraulics installed on bottom port of EVS4000 transmission (to allow for flat rear cab floor). For use on aerials without seperate PTO for hyd generator.	$1,466
1680-0189	Tow eyes front painted mounted in up position. Requires 16" minimum bumper extension on custom chassis and 18" minimum bumper extension on commercial chassis.	$238
1680-0193	Tow eyes rear below body stainless steel.	$1,820
1680-0194	Tow eyes front stainless steel through bumper / cab (PR).	$831
1680-0196	Tow eyes front painted through bumper / cab (PR).	$466
1680-0217	Driveline guard (EA).	$272
1680-0226	Shared aerial and hyd gen PTO system (for use with NPNT CR100/137/95-Platform with SmartPower or Harrison gen)(Requires eng approval with water pump).	$3,710
1680-0227	Tow eyes front painted with 3" holes below bumper/cab (PR).	$600
1680-0228	Under front bumper Class III hitch receiver. Custom chassis only.	$1,345
1680-0231	Insta-chain tire chain installation. Requires pre-wire option located in Cab Electrical.	$2,517
1680-0239	Tow eyes rear frame painted mounted low just above tailboard.	$489
1680-0242	Cold weather pkg for cab. Includes additional insulation on the front wall and insulation on rear cab heater hose lines (if equipped).	$2,996
1680-0245	Upgrade receiver and tow eye extension. The front bumper 9K winch receiver shall be extended forward, approximately 1" beyond front bumper IPOS (rather than at the under bumper location). Custom chassis only.	$666
1680-0247	Trailer hitch Class III mounted rear, optmized mounting to be in a raised mounting position.	$875
1680-0249	Driveline guards (as applicable).	$816
1680-0250	Diesel Exhaust Fluid (DEF) 5 gallon tank for 2013 EPA engines. Location: [#LOC].	$1,551
1680-0251	Diesel Exhaust Fluid (DEF) 10 gallon tank for 2013 EPA engines. Location: [#LOC].	$1,622
1680-0255	Seperate PTO for aerial hydraulic pump IPO shared system.	$1,756
1685-0001	Cab interior black. Does not include seat color.	$2,611
1685-0002	Cab interior burgundy. Does not include engine cover or seat color.	$2,611
1685-0003	Fold down computer tray bolted to engine cover on officer's side.	$675
1685-0004	Storage below rear bench seat for four SCBA bottles.	$614
1685-0008	Control lanyard Y type for air horns.	$156
1685-0011	Stainless steel pair of window bars for rear cab doors.	$343
1685-0026	Door Seat Riser Ovrlap drv/off for the Typhoon only.	$178
1685-0027	Heater rear w/o cover (PR).	$1,371
1685-0028	Heaters rear w/covers (PR).	$1,464
1685-0039	Window bars stainless steel pair for canopy windows.	$343
1685-0050	Mod Rear Bench Seat Riser Modify rear bench seat riser to have storage access from each side for (4) SCBA bottles, (2) ea side. Hinge doors as to work best with rear heater locations.	$1,433
1685-0056	Heater rear w/o cover (PR) and front heater with heat to the feet for the driver and officer.	$1,371
1685-0057	Heaters rear with covers (PR), and front heater with heat to the feet for the driver and officer.	$1,464
1685-0058	Interior cab access panel. Driver side of cab for access to rear of shore line receptacle. Panel to be 8" x 8".	$277
1685-0059	Locking seat riser door. Driver and officer seat riser doors are to include a locking push-button latch. Key type to be 1250.	$137
1685-0061	Interior cab access panel. Officer side of cab for access to rear of shore line receptacle. Panel to be 8" x 8".	$277
1685-0063	Medical glove box. Mount to rear area of engine cover. Includes slotted top for dispensing gloves without opening hinged lid. Box to be same color as interior of cab. Secure lid in closed position with small butterfly latch.	$230
1685-0064	Embossed diamond plate foot plates located at driver, officer and rear facing seat positions where feet would rest while seated.	$257
1685-0066	Officer seat riser storage compartment door to be on front of riser hinged towards engine cover.	$161
1685-0068	Rear engine cover diamond plate trim.	$198
1685-0069	Hinged interior cab gauge panel in front of driver. Includes (9) gauges- English dominant. Panel to be hinged for access to driver gauge cluster.	$1,944
1685-0078	Kick Plate in front of the officer to be diamond plate.	$131
1685-0084	3/16" Aluminum plate on top engine access door. To have swirl finish and be spaced up approx 1/2".	$230
1685-0085	Center cab dash electrical panel to be held in place with coin slot style fasteners.	$84
1685-0086	Stainless steel scuff plate under interior canopy window.	$305
1685-0089	Louvers for officers seat riser. Locate louvers in the front, side and door of riser.	$312
1685-0090	Rear cab headliner to be six pieces IPOS.	$236
1685-0093	Black rubber handrail mounted parallel to seats on rear of engine cover for driver and officer rear facing seats.	$165
1685-0094	Storage below rear bench seat. (1) horizontally hinged door on the front of the rear bench seat.	$395
1685-0095	Locking rear seat riser door (PR). Seat riser doors are to include a locking push-button latch. Key type to be 1250.	$137

1685-0104	Map pockets 14 gauge stainless steel (PR). Includes vinyl trim around top of opening and nylon strap with snap to retain contents. Locate pockets one each side on rear cab wall centered between center cabinet and side wall of cab with bottom approx 20" above floor.	$371
1685-0105	Sun visor strap (PR) with snap fasteners.	$127
1685-0106	Rear engine cover radio cabinet. Cabinet to have access from the top and from rear.	$614
1685-0107	Interior grab handle rubber covered (2). Locate one each side at interior of rear cab door opening (at rear of opening).	$190
1685-0108	Locking seat riser door. Driver and officer seat riser doors are to include a locking push-button latch. Key type to be CH-751.	$72
1685-0109	Locking rear seat riser door (PR). Seat riser doors are to include a locking push-button latch. Key type to be CH-751.	$72
1685-0110	Storage below rear bench seat for two SCBA bottles (one each side).	$614
1685-0111	Rear cab interior wall overlay with swirl and clear coat finish.	$619
1685-0112	Integrated Roll Sensor (IRS) for RollTek air bag system.	$1,993
1685-0113	Integrated roll sensor slave module for RollTek air bag system.	$927
1685-0114	Integrated Head Curtain (IHC) for RollTek air bag system.	$560
1685-0115	Integrated Belt Pretensioner (IBP) for RollTek air bag system.	$325
1685-0116	Interior grab handle rubber covered (2). Locate one each side at interior of front cab door opening (at rear of opening).	$190
1685-0117	Rear cab interior wall overlay with Zolatone finish.	$404
1685-0119	3/16" Aluminum plate on top engine cover forward of access door. To have swirl finish and be spaced up approx 1/2".	$230
1685-0120	Rear cab interior wall overlay with diamond plate finish.	$508
1685-0121	Flat bar (.5" x 2") installed on rear cab wall up high with full length shelf track.	$285
1685-0126	SCBA Storage tubes (4) horizontally mtd (2) each side in lower rear cab compartments above floor level.	$717
1685-0127	Locate rear cab heaters below front of rear wall seat riser(s). Includes louvers on each side facing riser panel.	$335
1685-0134	Embossed diamond plate foot plates located at each seating position where feet would rest while seated.	$257
1685-0135	Hot climate insulation package. Includes insulation for ceiling, front wall, rear wall, side walls, below seat risers, and in doors.	$2,105
1685-0136	Storage in rear wall free standing seat riser. (1) horizontally hinged door on the front of the free standing seat riser.	$306
1685-0138	3/16" Aluminum plate on top engine cover forward of access door. Finish to match cab interior and be spaced up approx 1/2".	$230
1685-0139	3/16" Aluminum plate on top engine access door. Finish to match cab interior and be spaced up approx 1/2".	$230
1685-0140	Storage at rear engine cover w/ cargo net top. (3) sided storage approx. 44.5"W x flush with upper engine cover high x sloped area of engine cover deep. Storage area to match cab interior.	$672
1685-0146	Extended electrical access panel in cab. Panel to extend up to allow for radio/equipment installation.	$529
1685-0147	Narrow rear cab wall support channel. Not available with rear wall seating.	$195
1685-0153	Storage below rear bench seat. (2) horizontally hinged doors on the front of the rear bench seat.	$790
1685-0154	Communications cabinets (1/8"). 20.5"W x 16"H x 20"D INT (PR). Includes (2) roll out trays and cargo netting over openings. Location: One each side over cab wheel wells. Includes a smooth plate cover with matching cab finish for customer installed wiring between towers.	$2,379
1685-0155	Cold climate insulation package. Includes insulation for ceiling, front wall, rear wall, side walls, below seat risers, and in doors.	$2,105
1685-0161	Severe duty dash package. Includes smooth plate alum center and officer side dash painted to match cab interior and lower dia plt kick panels.	$847
1685-0162	Severe duty engine cover. Includes floor type matting on sides, top forward and top rearward engine covers with sanded finish smooth aluminum trim.	$918
1685-0164	Severe duty engine cover. Includes floor type matting on sides, top forward and top rearward engine covers with smooth aluminum trim painted to match cab interior.	$1,079
1685-0165	Storage below rear bench seat. (1) horizontally hinged door on the front of the rear bench seat. Hinge hardware mounted with acorn nuts outside.	$395
1685-0172	Storage below rear bench seat. (1) hinged door on each front corner of the bench seat base.	$754
1685-0174	Louvers for rear bench seat riser. Locate louvers on each side of riser.	$312
1685-0180	On Scene Solutions Talon helmet holder (EA). Location: [#LOC].	$360
1685-0182	Severe duty dash package. Includes smooth plate alum center, officer side dash and lower kick panels; all painted to match cab interior.	$847
1685-0183	Front heater with heat to the feet for the driver and officer	$715
1685-0184	Heater rear w/o cover. Includes 110V blower.	$1,137
1685-0185	Locking rear seat riser door. Seat riser door to include a locking push-button latch. Key type to be 1250.	$137

1685-0188	Stainless steel trim low on officer side of engine cover (to match driver side). CII / Typhoon only.	$116
1685-0189	Identification plate GSA units. Located on inside of driver's door. Exact information and wording to be determined at time of final inspection. See specification.	$250
1685-0191	Diamond plate cover for battery charger/air compressor. Includes louvers for ventilation.	$201
1685-0192	PAC TRAC panels vertically stacked on back wall of cab each side outboard of bench seat.	$1,312
1685-0193	Slideout MDT mount officer cab dash. Requires severe duty dash w/ MDT notch. Not available with heat to the feet.	$961
1685-0194	Officer cab dash modification for Havis slideout MDT bracket. Not available with heat to feet or side roll protection.	$415
1685-0196	Severe duty Quest officer dash package. Includes smooth plate alum officer side dash with trim panel painted to match cab interior and lower dia plt kick panel.	$353
1685-0197	Rear upper cab interior wall 3/16" overlay with Zolatone finish. Approximately 20" high.	$323
1685-0199	Rear engine cover brushed stainless steel trim.	$418
1685-0200	(No longer used. Please see 1685-0193) Slideout MDT mount officer cab dash. Requires severe duty dash w/ MDT notch. Not available with heat to the feet.	$560
1685-0201	Severe duty dash package. Includes smooth plate alum center and officer side dash painted to match cab interior and lower dia plt kick panels. Officer cab dash notched for MDT slideout bracket(s). Not available with heat to the feet.	$1,033
1685-0204	Side mount telescopic computer tray bolted to engine cover on officer's side.	$836
1685-0205	Storage at rear engine cover w/ drop down rear door. (3) sided storage approx. 44.5"W x flush with upper engine cover high x sloped area of engine cover deep with (2) equally spaced vertical dividers. Storage area to match cab interior.	$672
1685-0219	Interior grab handle rubber covered (2). Locate one each side at interior of rear cab door opening (at front of opening).	$190
1685-0221	Severe duty dash package. Includes smooth plate alum center and officer side dash painted to match cab interior and lower dia plt kick panels. Officer cab dash notched with recessed glove box. Includes angled notepad holder on top. Not available with heat to the feet or Rolltek.	$1,247
1685-0222	Storage at lower rear engine cover w/ cargo net top. Approx. 30"W x 12"H x sloped area of engine cover deep. Storage area to match cab interior.	$672
1685-0223	Storage at rear engine cover w/ lift-up door. Storage approx. 44.5"W x flush with upper engine cover high x sloped area of engine cover deep. Storage area to match cab interior.	$672
1685-0225	Storage at rear engine cover w/ lift-up door. Storage approx. 37.5"W x flush with upper engine access cover high x 34" deep (front to rear). Includes forward 12" stationary cover. Storage area to match cab interior.	$932
1685-0235	Foot switch Linemaster model 632S to control air horns located [#LOC]. Includes 25 degree diamond plate bracket.	$105
1685-0238	Insulation - front cab wall. Includes insulation on rear cab heater hose lines (if equipped).	$94
1685-0239	Cab floor to be overlayed with 1/8" embossed diamond plate; front and rear.	$840
1685-0240	Slideout MDT mount officer cab dash with dock. Requires severe duty dash w/ MDT notch. Not available with heat to the feet.	$1,318
1685-0243	Pac Trac panels vertically stacked on back wall of cab each side outboard of medical cabinet.	$1,312
1685-0247	Cab floor to be overlayed with 1/8" embossed diamond plate; front and rear. Single piece with no gaps around perimeter. Front plates to be sand blasted to remove shine.	$1,003
1685-0251	Diamond plate cover to protect the steering wheel shaft/knuckle.	$194
1685-0254	Storage box locking, mounted on the rear lower engine cover. Engine cover lock box measures 18x24x9 with a lift top lid and a locking latch. Finish will match cab interior.	$766
1685-0258	SCBA rear wall peg tool board mount for three (3) Lifeguard Smart Dock 2 SCBA brackets. The "peg board" SCBA tool board shall be mounted between the two (2) rear outboard seats with adequate room between each pack to mount complete SCBA packs. Peg board sizing shall be approximately 40" wide X 35" high and shall be spaced off the rear wall approximately 1". The peg board shall be finished with Zolotone.	$2,277
1685-0261	Storage below rear bench seat. (1) cargo net (black) on each side of the bench seat to gain access to storage area.	$547
1685-0262	Storage below rear bench seat for two SCBA bottles (driver side). Officer side to be open storage w/ door.	$614
1685-0263	Severe duty dash package. Includes smooth plate alum center and officer side dash and lower kick panels; all painted to match cab interior. Officer cab dash notched for MDT slideout bracket(s). Not available with heat to the feet.	$1,033
1685-0265	Smooth plate cover(s) for battery charger and air compressor. These cover's shall be painted to match cab interior and shall include louvers as required for ventilation.	$201
1685-0266	Bolt-in partition wall. Locate under bench seat centered between driver and officer side.	$199
1685-0267	Modify rear bench seat riser to have storage access from each side for up to (2) 20lb ABC extinguishers, (1) ea side.	$1,242

1685-0269	Storage box approximately 11" wide x 10" high x 26" deep made from 1/8" diamond plate aluminum, centered on to rear cab floor. The box shall cradle (1) 2.5 gallon water fire extinguisher. The door shall be hinged with push button latches to provide easy access to the extinguisher in its stowed position stored at a slight incline within the box.	$590
1685-0271	Embossed diamond plate foot plates painted with black Durabak located at each seating position where feet would rest while seated.	$363
1685-0272	Cup holder (PR) with shallow tray located at front center of engine cover. Polyurethane construction for use with severe duty engine cover only.	$107
1685-0273	KNOX-BOX MedVault 2 model 5520H3S2-4. Includes E-ONE installed wiring to switched 12v power supply. Location: TBD per customer provided sketch. Requires dept to purchase software package from KNOX-BOX (if they do not already have it).	$2,385
1685-0274	Plate aluminum 1/8" outboard of medical cabinet rear wall between extrusions behind padding. Plate to run from ceiling down to rear cab support bracket.	$194
1685-0275	Cup holder (PR). Polyurethane construction for use in Typhoon and CII with severe duty engine cover only. Location: [#LOC].	$130
1685-0279	Chrome grab handle. Locate (1) on the engine cover centered between latches.	$101
1685-0281	Control lanyard type officer side only for air horns.	$156
1685-0282	Slideout MDT mount officer cab dash with dock (Havis DS-PAN-111, C-MD-105-Z, C-HDM-135). Requires severe duty dash w/ MDT notch. Not available with heat to the feet. To include 12 VDC electrical outlet wired to battery hot.	$1,671
1685-0283	Pac Trac panels vertically stacked on back wall of cab.	$1,312
1685-0284	Raceway across lower engine cover; full width of cover. Painted to match cab interior.	$193
1700-0001	Alternators Leece Neville dual 270 amp. 480 amp NFPA/540 amp SAE rating. Available only on ISX12 and Detroit EGR Series 60 engines.	$3,431
1700-0002	Alternator Niehoff 250amp. (250 amp SAE/240 NFPA rating). Not available on Cummins ISC or Detroit Diesel engines.	$2,209
1700-0003	Alternator Leece Neville 270 amp SAE, 240 amp NFPA rating.	$1,875
1700-0004	Alternator Niehoff 290 amp (290 amp SAE/265 NFPA rating). Not available on Cummins ISC, ISL or Detroit Diesel engines.	$3,366
1700-0005	Alternator Leece Neville 320 amp. 320 amp SAE/275 amp NFPA.	$2,916
1700-0006	Alternator Niehoff 400amp (400 Amp SAE/385 NFPA rating). Cyclone II w/Cummins ISM. Not available on Detroit Diesel Engines Recycle requires Eng. Review.	$5,104
1700-0008	Alternator Leece Neville dual 320 amp. 560 amp NFPA/540 amp SAE rating. Available only on ISX12 and Detroit EGR Series 60 engines.	$4,717
1700-0009	Alternator Niehoff 300 amp (300 amp SAE/270 NFPA rating). Available only on ISX12 and Detroit EGR Series 60 engines.	$2,918
1700-0010	Noise filter for Leece Neville alternator.	$190
1700-0011	Alternator Niehoff 340 amp. Not available on Cummins ISC, ISL or Detroit Diesel engines.	$3,960
1700-0012	Alternator Niehoff 430amp (430 Amp SAE/380 NFPA rating). Available on Cummins ISX12 only.	$4,026
1700-0016	Alternator Niehoff 350 amp (350 amp SAE/320 NFPA rating). Available on Cummins ISM.	$3,366
1700-0017	Noise filter for Neihoff alternator.	$193
1700-0018	Alternator Delco Remy 300 amp. 300 amp SAE/264 amp NFPA.	$2,858
1700-0019	Alternator Niehoff 360 amp (360 amp SAE/320 NFPA rating). Available only on ISX12.	$2,918
1750-0000	Ammeter gauge in cab 0-300 amps.	$286
1750-0001	Dome lights clear large one for each cab door.	$126
1750-0002	Dome lights red large one driver side one officer side	$126
1750-0004	Dome lights red large one driver side one officer side rear of cab	$126
1750-0006	Map light flexible arm. Located [#LOC].	$178
1750-0009	Radio AM/FM CD with weather band located [#LOC].	$718
1750-0010	Radio speakers additional pair. Locate each side rear cab ceiling.	$242
1750-0011	Speedometer officer's side overhead.	$275
1750-0012	Swivel reading lamps (PR) overhead between driver and officer. Lights to be individually switched.	$96
1750-0013	Turn signal Whelen 600 LED amber arrow pair located [#LOC].	$570
1750-0015	Windshield fans 8" pair. Location: [#LOC].	$332
1750-0016	Pump hourmeter in cab.	$119
1750-0018	Battery charger, Super Smart, 20 amp with 120V Kussmaul air compressor.	$1,433
1750-0019	Battery charger Super Smart 110 volt, 20 amp.	$371
1750-0021	Battery charger Kussmaul model 1200, 40 amp.	$624
1750-0022	Battery charger Kussmaul 40 amp model 1200 with air compressor.	$2,107
1750-0024	Auto-Eject receptacle inlet 20 amp located [#LOC] with a [#COL] cover.	$508
1750-0025	Auto-Eject receptacle inlet 30 amp 120 volt located [#LOC] and with a [#COL] cover.	$742
1750-0026	Clamshell controller mounted on officer's side of engine cover for the air horns.	$110
1750-0027	Control push-button switch officer dash for Q2B siren.	$84
1750-0029	Switch horn button two position DOT/air horn.	$87
1750-0030	Switch horn button two position DOT/electronic siren.	$87

1750-0031	Switch horn button two position DOT/Q2B.	$87
1750-0032	Switch horn button three position DOT/air horn/electronic siren.	$179
1750-0033	Switch horn button three position DOT/air horn/Q2B.	$179
1750-0034	Switch, additional 12 volt/15 amp. Location and function: [#LOC].	$179
1750-0035	Cornering light relay circuits for lights on sides of cab and / or bumper. Includes (2) relays. Requires scene light option. Interlocked with park brake.	$364
1750-0040	Battery charger Super Smart 220 volt 50 Hz, 20 amp.	$371
1750-0042	Horn button selector switch, 3-position DOT/ES/Q2B.	$179
1750-0043	12V power distribution module. Includes (6) battery hot and (6) switched hot circuits. 100 amps max (IATS).	$275
1750-0047	The chassis shall be pre-wired for installation of tire chains.	$377
1750-0048	Round clear incandescent light mounted in the [#LOC] door.	$31
1750-0049	Round red incandescent light mounted in the [#LOC] door.	$31
1750-0050	Round amber incandescent light mounted in the [#LOC] door.	$31
1750-0052	Round clear LED light mounted in the [#LOC] door.	$144
1750-0053	Round red LED light mounted in the [#LOC] door.	$54
1750-0054	Round amber LED light mounted in the [#LOC] door.	$54
1750-0059	Receptacle inlet 20 amp with a [#COL] cover. Location: [#LOC].	$256
1750-0060	Auto transfer switch 120 volt. Includes 8 place breaker box. Allows interior receptacles to be powered by either shore power or generator.	$674
1750-0061	Control push-button switch officer dash for air horns.	$84
1750-0062	Control push-button switch officer dash for siren.	$84
1750-0063	Clamshell controller mounted on officer's side of engine cover for Q2B.	$110
1750-0064	Clamshell controller mounted on on officer's side of engine cover for electronic siren.	$110
1750-0065	Turn signal Whelen 600 halogen amber pair located [#LOC].	$251
1750-0066	Halogen front turn signal amber (PR). Locate: [#LOC].	$243
1750-0067	Additional 4" red LED dome lights (PR) for driver and officer.	$251
1750-0068	Additional 4" red incandescent dome lights (PR) for rear of cab.	$234
1750-0069	Additional 4" red incandescent dome lights (PR) for driver and officer.	$191
1750-0070	Additional 4" red LED dome lights (PR) for rear of cab.	$251
1750-0071	Mount customer supplied antenna on cab roof. Location: [#LOC].	$154
1750-0072	12 VDC (or 24VDC) electrical outlet in the cab wired battery hot. Location: [#LOC].	$53
1750-0073	Antenna base Tessco P/N 90942 (NMO Motorola Style - also called MATM style) on cab roof. Location: [#LOC].	$83
1750-0074	Interlock to position front intake for cab tilting.	$246
1750-0075	English dominant main cab gauge cluster.	$1,804
1750-0076	Metric dominant main cab gauge cluster.	$1,910
1750-0077	Turn signal Code 3 model 65 LED amber with arrow insert (PR). Location: [#LOC].	$638
1750-0078	Light Whelen model PSR00FRR LED (4) red. Horizontally mounted flashing strip light on each of the inside lower cab door panels. Wire through door switch.	$700
1750-0079	Fuel gauge for officer.	$221
1750-0080	Conduit flexible 1.5" for radio installation center of dash to compartment under officer's seat.	$267
1750-0081	Conduit flexible 1.5" for radio installation compartment under officer's seat to pump panel.	$234
1750-0082	12V power distribution module. Includes (6) battery hot and (6) switched hot circuits. 100 amps max (IATS). Location: [#LOC].	$275
1750-0083	Turn signal Federal Signal QuadraFlare QL64Z-ARROW LED amber pair located [#LOC].	$243
1750-0084	Receptacle inlet 220 volt European "Schuko" style. Includes matching cord connector. Location: [#LOC]	$365
1750-0088	Whelen 500 LED red door ajar light. Model 50R00FRR light with 5FLANGEC flange.	$166
1750-0091	Battery Saver Kussmaul model 091-195-12 wired to battery charger receptacle.	$617
1750-0095	Second DOT traffic horn	$117
1750-0096	Bracket for Motorola Spectra Radio in the center overhead console offset to officer side. Dim: 7"W x 2"H, must be size of the opening after break.	$72
1750-0115	Master warning light switch to have a red cover (or bezel).	$33
1750-0117	Auto eject receptacle inlet 15 amp 250 volt with a [#COL] cover. Location: [#LOC].	$464
1750-0118	Flexible 2" conduit with connectors. Location: Officer cab dash to bottom of medical cabinet.	$326
1750-0121	Ammeter gauge in cab 0-400amp Cruz Pro digital.	$427
1750-0123	Auto eject receptacle inlet 15amp location or function [#LOC] and the color shall be [#COL].	$461
1750-0124	Whelen 4" round LED red door ajar light. Model 20R00FCR light with 2FLANGEC bezel.	$166
1750-0125	Block heater receptacle 15 amp with a [#COL] cover. Location [#LOC].	$256
1750-0126	Conduit flexible 1.5" for radio installation center of dash to area behind officer's seat.	$267
1750-0131	Pyrometer gauge in cab.	$507
1750-0132	Auto transfer switch for additional battery charge receptacle.	$407
1750-0133	Conduit flexible 1.5" for radio installation center of dash to rear bench seat.	$267
1750-0134	Conduit flexible 1.5" for radio installation rear bench seat to pump panel.	$408
1750-0136	Battery charger Super Smart 220 volt 60 Hz, 20 amp.	$371

1750-0144	Q2B brake switch to have a red cover (or bezel).	$33
1750-0145	Relocate the battery charger and (if applicable) air compressor to below the rear wall bench seat or rear center wall medical cabinet (if equipped).	$492
1750-0148	Turn signal Whelen 700 LED Chevron amber (PR). Locate [#LOC].	$597
1750-0149	Control push-button switch on officer's dash for Q2B siren brake.	$84
1750-0150	Block heater receptacle 20 amp Auto-Eject with a [#COL] cover. Location [#LOC].	$508
1750-0151	Receptacle inlet 15amp with a [#COL] cover. Location: [#LOC]	$256
1750-0156	Special EQ2B power amplifier location. Amp to be located [#LOC].	$246
1750-0157	Special battery charger location. Charger to be located [#LOC].	$246
1750-0158	Dome Lts Red/White LED. Package includes two lights mounted in the front and two mounted in the rear of the cab. White light wired through door and light assembly switch. Red light through light assembly switch.	$718
1750-0159	3 Position Q2B momentary switch (activate/off/brake). Loc: [#LOC].	$179
1750-0160	Dome Lts Red/White Incandescent. Package includes two lights mounted in the front and two mounted in the rear of the cab. Front cab lights: White light wired through door and light assembly mounted switch. Red light through light assembly mounted switch. Rear cab lights: White light wired through door and switch on side cab interior wall. Red light through switch on side cab interior wall. Rear dome switches to be located between side window and door opening and control light on respective side of cab.	$850
1750-0161	Air compressor, Kussmaul model 091-9B-1, 120V.	$870
1750-0162	Battery charger Kussmaul model 091-35/10, 35 amp battery charger / 10 amp battery saver.	$728
1750-0163	Speedometer officer's side switch panel.	$275
1750-0164	Fuel gauge for officer. Location: officer switch panel.	$221
1750-0165	Conduit flexible 1.5" for radio installation center of dash to compartment under driver's seat.	$267
1750-0166	ATC override switch.	$179
1750-0167	Block heater to be wired to battery charger receptacle with a lighted on/off switch behind driver seat.	$178
1750-0168	Dome Lts Red/White 4" incandescent (5). Lights to be located two front and three rear. White light wired through door and light assembly mounted rocker switch. Red light through light assembly mounted rocker switch.	$647
1750-0169	Radio speakers (3). Locate officer ceiling and each side rear cab ceiling. Wiring to terminate in officer side overhead console for customer supplied radio(s).	$416
1750-0171	Clamshell controller mounted on on driver's side of engine cover for Q2B.	$110
1750-0172	Special battery charger and air compressor location. Charger and air compressor to be located [#LOC].	$246
1750-0173	Rocker switch cover (or bezel) to be red. Location: [#LOC].	$33
1750-0174	Battery Charger Professional Mariner. Located outside driver side door area. The charger to be mounted under rear bench seat riser (centered) .	$1,238
1750-0176	Light Whelen model 70RA6FCR Super LED (4) split red/amber with chrome flanges. Horizontally mounted flashing lights on each of the interior cab door panels outboard mounted. Wire through door switch.	$1,430
1750-0177	Receptacle inlet 30amp twist lock with a [#COL] cover. Location: [#LOC].	$492
1750-0178	Windshield fan 8". Location: rear facing mounted on driver side 3x3 post.	$167
1750-0186	Dome Lts Red/White Incandescent additional. White light wire through door and light assembly mounted switch. Red light through light assembly mounted switch. Location: Centered rear of cab.	$126
1750-0187	Auto drain, Kussmaul model 091-9-089 120V. For use with air compressor 091-9B-1 only.	$182
1750-0188	DPF regeneration override switch.	$179
1750-0189	Gauge ambient temperature with digital display. Locate display on officer side switch panel.	$735
1750-0192	Aerial engagement switch in cab to have a red cover (or bezel).	$33
1750-0193	Oil level sensor light in cab to indicate drop in hydraulic reservoir oil level. Interlock w/parking brake, tag to read "Power Steering System Failure, Stop Vehicle".	$124
1750-0194	Dome Lts Red/White LED additional (PR). White light wire through door and light assembly switch. Red light through light assembly switch. Location: Rear crew area.	$360
1750-0195	Cab dome lts red/white (2 red/white, 2 white) 4" incandescent. White light wired thru door and light assembly mounted rocker switch. Red light thru light assembly mounted rocker switch. Red/white located in front of cab, white located at rear cab doors.	$517
1750-0196	Battery charger Newmar model PT-80, 80amp.	$3,124
1750-0197	Clamshell controller mounted on driver's side of engine cover for the air horns.	$110
1750-0203	Special location for battery charger indicator. Location: [#LOC].	$98
1750-0205	Handheld flashlight, orange Streamlight Vulcan flashlight with vehicle mount system. Location: [#LOC].	$227
1750-0206	Clamshell controller mounted on officer's side cab dash for Q2B and air horns.	$110
1750-0208	Light Whelen model PSA00FAR LED (4) amber. Horizontally mounted flashing strip light on each of the interior lower cab door panels outboard. Wire through door switch.	$700
1750-0209	Clamshell controller mounted on on officer's side of engine cover (knee height) for Q2B.	$110

1750-0214	Mount customer supplied GPS antenna on cab roof. Location: [#LOC].	$154
1750-0215	Turn signal Whelen M6 LED arrow amber pair located [#LOC].	$577
1750-0221	Xenon HID cab headlights. CIIX and TyphoonX only.	$1,582
1750-0222	12 volt electrical outlet in the cab wired through ignition. Location: [#LOC].	$53
1750-0223	Control push button switch center electrical cover offset to officer side for air horns	$84
1750-0226	Whelen 4" round LED amber jacks down light IPOS. Model 20A00FCR light with 2FLANGEC bezel.	$166
1750-0231	Light Whelen model PSA00FAR LED (3) amber. Horizontally mounted flashing strip light on each of the interior lower cab door panels outboard. Wire through door switch.	$524
1750-0234	Digital speedometer officer's side overhead.	$511
1750-0248	Xenon HID cab headlights. Quest cab only.	$1,582
1750-0250	Dome Lt Red/White LED additional (EA). White light wire through door and light assembly switch. Red light through light assembly switch. Location: Rear facing engine cover seat(s).	$180
1750-0252	Kussmaul mounting plate model 091-9H for 12v air compressor.	$72
1750-0256	Auto eject block heater receptacle inlet 15amp with a [#COL] cover. Location: [#LOC].	$461
1750-0257	Aerial PTO hourmeter in cab IPOS.	$119
1750-0258	Antenna base Tessco P/N 90942 (NMO Motorola Style - also called MATM style) on cab roof package (6). Location: (3) driver side between a/c condensor and storage box terminating below officer seat and (3) officer side between a/c condensor and storage box with (1) terminating in center overhead and (2) terminating in officer dash. See customer layout drawing on file with sales.	$492
1750-0261	Clamshell controller mounted on on officer's side cab dash at "A" post for Whelen Howler.	$110
1750-0263	Radio speakers pair. Locate each side rear cab ceiling. Wiring to terminate in center dash for customer supplied radio(s).	$242
1750-0264	Block/oil pan heater on/off 110V switch. Location: inside driver door; rear of seat.	$152
1750-0267	Battery charger Kussmaul 4000, 45 amp with air compressor.	$2,159
1750-0268	Battery charger Kussmaul 40 amp model 1200 with 120V HP air compressor.	$2,151
1750-0269	12ga dedicated ground wire to center overhead console.	$69
1750-0270	Control push-button switch officer side (side facing) of center electrical cover for Q2B siren.	$84
1750-0271	Control push-button switch officer side (side facing) of center electrical cover for air horns.	$84
1750-0275	Receptacle inlet 30amp household with a [#COL] cover. Location: [#LOC].	$492
1750-0276	Battery charger Newmar model EV-40-12-1, 40amp.	$1,295
1750-0278	Light Whelen LED strip model PSC0CDCR to illuminate cab floor. Horizontally mounted on seat riser. Wire through door switch. Location: [#LOC]	$136
1750-0283	LED cab headlights. CIIX and TyphoonX only.	$1,698
1750-0284	Switch additional guarded toggle. Location and Function: [#LOC].	$179
1750-0285	The chassis shall be pre-wired for installation of tire chains. Includes guarded toggle switch located on the driver side diagnostic panel.	$377
1750-0286	Receptacle block heater inlet 20amp with a [#COL] cover. Location: [#LOC].	$256
1750-0289	Battery charger Kussmaul 4000, 45 amp	$1,388
1750-0300	Radio AM/FM/CD/weather band w/auxiliary input port located [#LOC].	$627
1750-0302	Control push-button switch officer side ovherhead for Rumbler.	$84
1750-0303	Aerial engagement switch to be guarded style located on the panel outboard of the steering wheel below dash.	$195
1750-0305	Dome lts Whelen red/white 4" LED (6). Lights to be located two front and four rear. White light wired through door and light assembly mounted rocker switch. Red light through light assembly mounted rocker switch.	$2,646
1750-0310	Clamshell controller mounted on on officer's side of engine cover for Federal Signal Rumbler.	$110
1750-0314	Battery charger Kussmaul model 12 HO PIM, 20 amp. Includes model 091-189-12 indicator located adjacent to inlet receptacle.	$1,246
1750-0316	Switch horn button two position DOT/Rumbler.	$87
1750-0319	Control push-button switch officer side (side facing) of center electrical cover for EQ2B siren.	$84
1750-0322	Light Whelen model PSC00FCR LED (4) clear. Vertically mounted flashing strip light with 14 flash patterns including steady burn shall be mounted on the lower cab step well areas (interior). The front doors shall have (1) strip light shall be located on forward step well wall (both sides). The rear doors shall have (1) strip light shall be located on rear step well wall (both sides). Wire through door switch.	$700
1750-0323	Engine tunnel to be fitted with a position activation switch to activate engine compartment lighting when not in the fully closed position.	$442
1750-0324	Air compressor, Kussmaul model 091-9 12V.	$836
1750-0325	Pigtail, minimum of 18" of wire for service of the battery charger and air compressor.	$42
1750-0326	Auto transfer switch 120 volt. Includes 2 place breaker box. Allows interior receptacles to be powered by either shore power or generator.	$656
1750-0327	Switch momentary to activate heat option contained in mirrors for 10 minutes. The heat will automatically turn itself off after the heat activation time period (10 minutes) has expired.	$172

1750-0328	Auto transfer switch 120 volt. Includes 8 place breaker box. Allows interior receptacles to be powered by either shore power or inverter.	$674
1750-0329	Cornering light relay circuits for lights in center of rear tandem wheel well. Includes (2) relays. Requires scene light option. Interlocked with park brake.	$364
1750-0330	Dome Lt Red/White LED additional (EA). White light wire through door and light assembly switch. Red light through light assembly switch. Location: centered between rear cab dome lights.	$180
1750-0331	Control push-button switch driver side (side facing) of center electrical cover for EQ2B siren.	$84
1750-0340	Control push-button switch officer side (side facing) of center electrical cover for EQ2B siren brake.	$84
1750-0341	Transverse cab compartment dome light package (4) LED. Trucklite 44 series.	$512
1750-0342	Battery charger Kussmaul model 12 HO PIM, 20 amp. Includes model 091-189-12 indicator located behind driver's door adjacent to exterior handrail.	$1,246
1750-0343	Battery charger E-ONE LPC 20. 120 volt inlet, 20 amp output.	$535
1750-0344	Battery charger E-ONE LPC 40. 120 volt inlet, 40 amp output.	$814
1750-0350	Install customer supplied radio/intercom (ea). Loc: [#LOC].	$444
1750-0351	Kussmaul solar power charging system; model 092-1220-1. Location: Center rear cab roof.	$2,102
1750-0353	Dome Lts Red/White LED. Package includes two lights mounted in the front and three mounted in the rear of the cab. White light wired through door and light assembly switch. Red light through light assembly switch.	$914
1750-0355	Each 110 volt cab receptacle shall have a dedicated breaker within the breaker box. This is to provide each cab mounted receptacle (single outlet, duplex, etc. as applicable) with its own isolated circuit.	$235
1750-0356	Radio speaker (1). Locate center rear ceiling. Wiring to terminate in center overhead console for customer supplied radio.	$122
1750-0360	Auto-Eject receptacle inlet 30 amp 240 volt located [#LOC] and with a [#COL] cover.	$742
1750-0368	Dome Lts Red/White 4" LED (6). Lights to be located two front and four rear. White light wired through door and light assembly mounted rocker switch. Red light through light assembly mounted rocker switch.	$2,009
1750-0369	On-Spot activation switch shall have a red flip up safety guard. The switch shall de located on the driver side overhead panel offset to the officer side as far as possible.	$45
1750-0370	Engine hourmeter in cab.	$140
1750-0372	12 VDC (or 24VDC) electrical outlet in the cab wired battery hot with 14AWG at each seated position. Outlets are shared within the same circuit.	$214
1750-0374	Light Whelen model PSB00FBR LED (4) blue. Horizontally mounted flashing strip light on each of the inside lower cab door panels. Wire through door switch.	$700
1750-0375	Switch console mounted to the driver side engine cover.	$140
1800-0000	Cooling system for 2004 compliant engines, Typhoon only.	$5,459
1800-0001	Cooling for EGR engines. Includes charge air cooler.	$5,658
1800-0003	Coolant System Overflow Recovery System, CRS-150	$491
1800-0005	Cooling system for use with Cyclone II X, Typhoon X, and Quest chassis. Includes coolant recovery system.	$5,658
1800-0006	Remote coolant filter for engine cooling system (Cummins ISC and ISL engines only).	$484
1800-0013	Cooling system for use with Cyclone II X, Typhoon X, and Quest chassis. For use with 2010/2013 EPA engines. Includes coolant recovery system.	$6,375
1800-0024	Ball valve drain for radiator ipo petcock valve.	$98
1800-0026	Plug shall be installed in drain of radiator IPO petcock valve.	$58
3000	**Body**	
3080-0000	Body aerial 95/CR100 CII/Quest medium cab without pump. 100" wide with L and R extended rescue style high sides and rear side staircases. 61" high body for 11'-10" OAH.	$51,119
3080-0001	Body aerial 95/CR100 with center hose bed. Configured for midship pump and 300 tank. 100" wide with L and R extended rescue style high sides and double beavertails. 63" high body for 12'-1" OAH	$60,304
3080-0004	Body aerial HM100/110 with center hose bed. Configured for midship pump and 500 tank. 100" wide with L and R extended rescue style high sides and double beavertails. 67" high body for 11'-6" OAH.	$57,455
3080-0005	Body aerial HM100/110 CII without pump. 100" wide with L and R extended rescue style high sides and double beavertails. 67.25" high body for 11'-5" OAH.	$51,239
3080-0006	Body aerial HP100 CII without pump. 100" wide tandem axle. (220" WB medium cab / 230" WB long cab). Includes L and R extended rescue style high sides and double beavertails.	$53,087
3080-0007	Body aerial HP100 with center hose bed. Configured for midship pump and 500 tank. 100" wide body with 230" wheelbase tandem axle. Includes L and R extended rescue style high sides and double beavertails.	$60,917
3080-0008	Body aerial HP75 / HP78 with center hose bed. Configured for midship pump and 400-500 tank. Single axle 100" wide body. Includes L and R rescue style high sides. The rear turntable access door to match the rear body finish.	$38,915

3080-0010	Body aerial HP75 / HP78 SideStacker Quest / CII / Typhoon with pump. Single axle. Includes pocket style drop down step at left rear staircase. The rear access doors to match the rear body finish.	$43,146
3080-0031	HP95 MidMount front body with pump.	$18,483
3080-0032	HP95 MidMount front body without pump.	$18,519
3080-0033	HP95 MidMount front body without pump low travel height.	$17,645
3080-0034	HP95 MidMount center body with pump and 300g tank.	$15,768
3080-0035	HP95 MidMount center body with pump and 500g tank.	$15,768
3080-0036	HP95 MidMount center body with pump and 300g tank. Includes optional officer's side compartment above rear wheels.	$16,008
3080-0037	HP95 MidMount center body with pump and 500g tank. Includes optional officer's side compartment above rear wheels.	$16,008
3080-0038	HP95 MidMount center body without pump.	$14,927
3080-0039	HP95 MidMount center body without pump with wide ladder tunnel.	$16,038
3080-0040	HP95 MidMount center body without pump low travel.	$15,713
3080-0041	HP95 MidMount rear body with hosebed.	$22,074
3080-0042	HP95 MidMount rear body without hosebed.	$23,039
3080-0043	HP95 MidMount rear body with narrow hosebed and shallow rescue style officer's side compartments.	$23,857
3080-0044	HP95 MidMount rear body with wide ladder tunnel and no hosebed.	$23,039
3080-0045	HP95 MidMount rear body without hosebed low travel.	$21,761
3080-0046	HP95 MidMount center body with pump and 300g tank. Includes optional officer's side shallow compartment above rear wheels.	$16,579
3080-0047	HP95 MidMount center body with pump and 500g tank. Includes optional officer's side shallow compartment above rear wheels.	$16,579
3080-0054	Body aerial 95/CR100 CII with pump and 500g tank. 100" wide with L and R extended rescue style high sides and double beavertails.	$60,304
3080-0057	Body aerial HP100 Platform without pump. 100" wide with L and R extended rescue style high sides, seperate rear side compartments and rear side staircases. The door on small compt next to rear outrigger to match wheelwell.	$51,119
3080-0059	Body aerial HM100 CII without pump - Memphis. Includes left side traditional style extended high sides, combined pltwrk in L6/L7 and L8/L9, half right side with DP panels above and double beavertails. Trans floor 3/16 Dia Plt, others 3/16 SM Plt. Manual cab tilt in R1. 69.25" high body for 11'-7" OAH.	$51,820
3080-0064	Body aerial HP75 / HP78 SideStacker Quest / CII / Typhoon with pump. Single axle. Includes extended R1 compt and pocket style drop down step at left rear staircase. The rear access doors to match the rear body finish.	$43,146
3080-0065	Body aerial HP100 with center hose bed. Configured for midship pump and 300 tall tank. 100" wide body with 230" wheelbase tandem axle. Includes L and R extended rescue style high sides, single right side hose chute and double beavertails.	$63,073
3080-0066	Body aerial HP75 / HP78 with center hose bed. Configured for midship pump and 400-500 tank. Single axle 100" wide body. Includes L and R rescue style extended high sides. The rear turntable access door to match the rear body finish.	$40,973
3080-0067	Body aerial HP75 / HP78 with combined extended height front side compts, beavertail compts combined w/rear side compts and center hose bed. Configured for midship pump and 400-500 tank. Single axle 100" wide body. The rear turntable access door to match the rear body finish.	$44,290
3080-0069	Body aerial HP75 / HP78 SideStacker Quest / CII / Typhoon with pump. Single axle. Right side ahead of rear axle to have two seperate compts, 24"w R1 and 32"w R2. Includes pocket style drop down step at left rear staircase. The rear access doors to match the rear body finish.	$43,985
3080-0070	Body aerial 95/CR100 CII/Quest medium cab without pump. 100" wide with Left extended rescue style high side, right half side with recessed area above for horizontal ladder storage and rear side staircases. 61" high body for 11'-10" OAH.	$54,469
3080-0071	Body aerial 95/CR100 CII/Quest long cab without pump. 100" wide with L and R extended rescue style high sides and rear side staircases. 61" high body for 11'-10" OAH.	$51,119
3080-0073	Body aerial HP100 CII without pump. 100" wide tandem axle. (230" WB medium cab). Includes L and R extended rescue style high sides and double beavertails.	$55,704
3080-0074	Body aerial HP100 Platform 250" WB 67.5/68 cab without pump. 100" wide with L and R extended rescue style high sides, seperate rear side compartments (tall compartment to be ahead of outrigger) and rear side staircases. The door on small compt to rear of rear outrigger to match wheelwell.	$50,606
3080-0080	Body aerial HM100/110 CII without pump. 96" wide with L and R ladder recesses, 16 wide forward upper compt (IPO trans), (3) upper storage compartments (two trans),and double beavertails. Manual cab tilt pump located low in R1 against forward wall. 61.25" high body for low OAH. Requires troughed cab.	$61,756

3080-0087	Body aerial HM100/110 CII without pump. 96" wide with L and R ladder recesses, 20 wide forward upper compt (IPO trans), (3) upper storage compartments (two trans), and double beavertails. Manual cab tilt pump located low in R1 against forward wall. 61.25" high body for low OAH. Requires troughed cab.	$61,756
3080-0096	Body aerial HP100 Platform 250" WB 67.5/68 cab without pump. 100" wide with L and R extended rescue style high sides, seperate rear side compartments (tall compartment to be rearward of outrigger) and rear side staircases. The door on small compt next to rear outrigger to match wheelwell.	$50,606
3080-0097	HP95 MidMount front body without pump. Includes a compt on each side ahead of waterway inlet with a vert hinged double pan painted door.	$20,270
3080-0098	HP95 MidMount rear body with wide ladder tunnel and no hosebed or staircase.	$23,039
3080-0100	Body aerial 95/CR100 CII extended aerial cab without pump (245" WB). 100" wide with L and R extended rescue style high sides and rear side staircases. 58" high body for 11'-7" +or-1" OAH. Requires troughed cab.	$55,010
3080-0143	Body aerial HM100/110 ladder without pump (172 C/A for use with DPF/SCR aftertreatment). 100" wide with L and R extended rescue style high sides and double beavertails. 67" high body for 11'-5" OAH.	$52,212
3080-0144	Body aerial HP100 ladder without pump (172 C/A for use with DPF/SCR aftertreatment). 100" wide tandem axle. (230" WB medium cab / 240" WB long cab). Includes L and R extended rescue style high sides and double beavertails.	$53,574
3080-0145	Body aerial 95/CR100 medium cab without pump (187 C/A for use with DPF/SCR aftertreatment). 100" wide with L and R extended rescue style high sides and rear side staircases. 61" high body for 11'-10" OAH.	$51,119
3080-0146	Body aerial HP100 Platform without pump (192 C/A for use with DPF/SCR aftertreatment). 100" wide with L and R extended rescue style high sides, seperate rear side compartments and rear side staircases. The door on small compt next to rear outrigger to match wheelwell.	$51,119
3080-0148	HP95 MidMount front body without pump (for use with DPF / SCR aftertreatment).	$18,519
3080-0149	HP95 MidMount front body without pump low travel height (for use with DPF / SCR aftertreatment).	$17,645
3080-0150	Body aerial HP75 with combined standard height front side compts and center hose bed. Configured for midship pump and 400-500 tank. Single axle 100" wide body.	$40,981
3080-0151	Body aerial 95/CR100 CII/Quest long cab without pump (177 C/A for use with DPF/SCR aftertreatment). 100" wide with L and R extended rescue style high sides and rear side staircases. 61" high body for 11'-10" OAH.	$51,119
3080-0152	Body aerial HP100 Platform without pump. 100" wide with L and R extended rescue style high sides, seperate rear side compartments and rear side staircase (left side only). The door on small compt next to rear outrigger to match wheelwell.	$51,119
3080-0154	Body aerial 95/CR100 with center hose bed. Configured for 250" wheel base, long cab, midship pump and 300 tank. 100" wide with L and R extended rescue style high sides and double beavertails.	$60,304
3080-0155	Body aerial HP100 with center hose bed. Configured for midship pump and 500 tank. 100" wide body with 230" wheelbase tandem axle. Includes L and R extended rescue style high sides and single access staircase at center rear of body. The rear turntable access door to match the rear body finish.	$62,862
3080-0156	SS body with lowered aerial HP100 Platform, fire pump without tank/hose bed (body lowered 2"). 100" wide with L and R extended rescue style high sides, combined rear side compartments and rear side staircases. The doors on small compts next to rear outriggers to be drop-down stainless steel.	$67,582
3080-0157	Body aerial HP100 Platform without pump. 100" wide with L and R extended rescue style high sides, combined rear side compartments and rear side staircases. The doors on small compts next to rear outrigger to match wheelwell.	$51,119
3080-0158	Body aerial HM100/110 without pump, 230" wheelbase with medium cab. 100" wide with L and R extended rescue style high sides, L1 hydraulic oil reservior location and double beavertails. 61" high body for low OAH. Requires troughed cab.	$57,563
3080-0159	Body aerial HM100/110 without pump, 220" wheelbase with medium cab. 100" wide with L and R extended rescue style high sides, L1 hydraulic oil reservior location and double beavertails. 61" high body for 10'-11" (+or-1") OAH. Requires troughed cab.	$57,563
3080-0162	Body aerial HM100/110 without pump, 220" wheelbase with medium cab. 100" wide with L and R extended rescue style high sides, L1 hydraulic oil reservoir location and double beavertails. 64" high body for 11'-3" OAH. Requires troughed cab (if applicable).	$57,563
3080-0163	Body aerial HM100/110 without pump, 220" wheelbase with medium cab. 100" wide with L and R extended rescue style high sides, L1 hydraulic oil reservoir location and double beavertails. 67" high body for 11'-5" OAH.	$51,239
3080-0165	Stainless steel body aerial HP75 / HP78 with center hose bed. Configured for midship pump and 400 tank. Single axle 100" wide body. Includes L and R rescue style high sides. The rear turntable access door to match the rear body finish.	$45,667

3080-0166	Stainless steel body aerial HP75 / HP78 SideStacker Quest / CII / Typhoon with pump. Single axle. Includes pocket style drop down step at left rear staircase. Includes full length of body right side hose bed. The rear access doors to match the rear body finish.	$50,777
3080-0167	Stainless steel body aerial HP75 / HP78 SideStacker Quest / CII / Typhoon with pump. Single axle. Includes full height R1 compartment and pocket-style drop-down step at the left rear staircase, and a shortened hose bed length. The rear access doors to match the rear panel body finish.	$50,777
3080-0168	Stainless Steel Body aerial HP75 / HP78 with center hose bed. Configured for midship pump and 400 gal tank. Single axle 100" wide body. Includes L and R rescue style extended high sides. The rear turntable access door to match the rear body finish.	$47,528
3080-0169	Stainless steel Body aerial HP75 / HP78 with combined extended height front side compts, beavertail compts combined w/rear side compts and center hose bed. Configured for midship pump and 400 gal tank. Single axle 100" wide body. The rear turntable access door to match the rear body finish.	$51,378
3080-0170	Stainless Steel Body aerial HP75 / HP78 SideStacker Quest / CII / Typhoon with pump. Single axle. Right side ahead of rear axle to have two separate compts, 24"w R1 and 32"w R2. Includes pocket style drop down step at left rear staircase. The rear access doors to match the rear body finish.	$51,023
3080-0171	Stainless Steel Body aerial HP75 with combined standard height front side compts and center hose bed. Configured for midship pump and 400 gal tank. Single axle 100" wide body.	$47,539
3080-0172	Stainless Steel Body aerial HP75 / HP78 SideStacker Quest / CII / Typhoon with pump. Single axle. 65" body height for low OAH applications. Includes extended R1 compt and pocket style drop down step at left rear staircase. The rear access doors to match the rear body finish.	$48,923
3080-0173	Body aerial 95/CR100/137 CII/Quest long cab without pump (177.5 C/A for use with DPF/SCR after treatment). 96" wide body. Left side to include extended rescue style high side L1/L2, recessed area for horizontal ladder storage and additional compartment to rear of ladders. Right side to be extended rescue style high side. Body includes upper transverse storage in L2/R2 upper, 3/16" upper body plate work, rear of body raised 4" aft of rear jack legs and rear side staircases. 61" high body for 11'-10" +or-1" OAH.	$55,244
3080-0174	Body aerial HP100 Platform without pump. 100" wide with L and R extended rescue style high sides, seperate rear side compartments and rear side staircases. Rear of body raised 4" for improved angle of departure. The door on small compt next to rear outrigger to match wheelwell.	$51,119
3080-0175	Body aerial 95/CR100 medium cab without pump (187 C/A for use with DPF/SCR aftertreatment). 100" wide with L and R extended rescue style high sides and rear side staircases. 58" high body for 11'-7" +or-1" OAH. Requires troughed cab.	$55,010
3080-0176	Body aerial HP100 ladder without pump (172 C/A for use with DPF/SCR aftertreatment). 100" wide tandem axle. (230" WB medium cab / 240" WB long cab). Includes L and R extended rescue style high sides, provisions for L1 hydraulic reservoir and double beavertails.	$53,574
3080-0188	HP95 MidMount center body without crosslays includes tank, 3/16" smooth plate compartment floors and wide ladder tunnel.	$16,991
3080-0195	HP95 MidMount front body with pump and 3/16" smooth plate compartment floors (for use with DPF / SCR aftertreatment).	$18,769
3080-0196	HP95 MidMount rear body with 3/16" smooth plate compartment floors, wide ladder tunnel and no hosebed or staircase.	$27,808
3080-0197	HP95 MidMount front body with pump and 3/16" smooth plate compartment floors.	$18,769
3080-0198	Body aerial HP75 / HP78 SideStacker Quest / CII / Typhoon with pump. Single axle. Includes 3/16" diamond plate floors for all compartments, pocket style drop down step at left rear staircase. The rear access doors to match the rear body finish.	$43,337
3080-0199	Body aerial 95/CR100 CII/Quest medium cab without pump (187 C/A for use with DPF/SCR aftertreatment). 100" wide with L and R extended rescue style high sides and double beavertails. 63" high body for 12'-1" OAH.	$51,119
3080-0200	Body aerial HP100 Platform 260" WB 80" cab without pump (180 C/A for use with DPF/SCR aftertreatment). 100" wide with L and R extended rescue style high sides, separate rear side compartments and rear side staircases. The door on small compt next to rear outrigger to match wheelwell.	$50,606
3080-0201	Body aerial 95/CR100 medium cab without pump (187 C/A for use with DPF/SCR aftertreatment). 100" wide with L and R extended rescue style high sides and rear side staircases. Includes rear perimeter of body aft of rear jack legs raised 4" to improve angle of departure. 61" high body for 11'-10" OAH.	$51,119
3080-0202	Body aerial HM100/110 ladder without pump (172 C/A for use with DPF/SCR aftertreatment). 100" wide with L and R extended rescue style high sides and double beavertails. 64" high body for 11'-2" +/-1" OAH. Requires troughed cab (if applicable).	$57,563
3080-0204	Body aerial single axle LTH100 without pump for use with a medium cab (162 C/A for use with vertical SCR aftertreatment). 96" wide with L and R rescue style high sides and rear side staircases. Rear of body aft of rear jack legs raised 3". 61" high body for 10'-7" OAH.	$52,212

3080-0207	Low profile cab stainless steel body aerial HP75 / HP78 SideStacker Quest / CII / Typhoon with pump, body lowered by 4" to 65" high. Single axle. Includes pocket style drop down step at left rear staircase. Includes full length of body right side hose bed. The rear access doors to match the rear body finish.	$50,777
3080-0215	Body aerial HP75 / HP78 SideStacker Quest / CII / Typhoon with pump for industrial applications. Single axle. Includes extended R1 compt and pocket style drop down step at left rear staircase. The rear access door to match the rear body finish.	$43,146
3080-0216	Body aerial HM100/110 CII/Quest long cab ladder without pump (162.5" C/A for use with DPF/SCR aftertreatment). 100" wide with L and R extended rescue style high sides, L1 hydraulic oil reservoir and double beavertails. 64" high body for 11'-2" +/-1" OAH. Requires troughed cab (if applicable).	$57,563
3080-0217	Body aerial HP100 ladder without pump (172 C/A for use with DPF/SCR aftertreatment). 100" wide tandem axle. (230" WB medium cab / 240" WB long cab). Includes L and R extended rescue style high sides, provisions for L1 hydraulic reservoir and double beavertails. 61" high body for low OAH. Requires troughed cab.	$57,294
3090-0019	Body Specs - SideStacker aerial with tandem axle. Includes left rear staircase with pocket style drop down step and 3/16" smooth plate compartment floors.	$1,207
3100-0317	Horizontal partition located in driver side roof top compartment over DOT bottles. Floor to be provided above the DOT bottles to use remaining area above.	$808
3110-0027	Rear of body to have un-painted extrusions with un-painted smooth plate body panels or just unpainted smooth plate to facilitate rear body striping.	$225
3110-0028	Rear body panels to be painted smooth plate.	$791
3110-0058	Rear of body to have flush un-painted smooth plate body panels to facilitate rear body striping.	$1,165
3110-0072	Rear of body to have flush painted smooth plate body panels.	$1,426
3110-0079	Rear of body to have painted extrusions with un-painted smooth plate body panels to facilitate rear body panel striping.	$225
3110-0171	Rear of stainless steel aerial body to have un-painted smooth plate panels to facilitate rear body striping.	$260
3110-0224	Rear body panels to be upgraded from smooth aluminum plate to unpainted smooth FRP.	$244
3120-0486	Vertical and horizontal partitions located in officer side roof top compartment. Vertical partition located rearward of electric cord reel and horizontal partition located over DOT bottles. Floor to be provided above the DOT bottles to use remaining area above.	$1,105
3130-0024	Upper SM pump module with diamond plate storage pan (only).	$1,421
3130-0059	Pump module HP75 / HP78. Includes running boards.	$6,638
3130-0282	Stainless steel 46" wide lower pump module. Includes side running boards with Bustin Tread inserts.	$4,443
3130-0291	Upper SM stainless steel pump module with single stacked triple crosslays and top open storage with treadplate flooring.	$1,641
3130-0421	eMAX Pump module HP75/78. Includes enclosed pump panel, compt on officer side (opposite pump panel), lower and upper storage areas, center front pump access doors, removable center floor in upper area, storage pan and boom support diamond plate filler panels. Lower storage area to hold (1) tray for 200' of 1.75" DJ preconnected hose and (1) tray for 200' of 2.5" DJ preconnected hose. Upper storage area to hold (1) tray for 200' of 1.75" DJ preconnected hose offset to rear and storage area for (2) backboards vertically stored offset forward w/sleeve each side of center pump access.	$7,480
3130-0423	Stainless steel pump module HP75 / HP78. Includes running boards with Bustin Tread inserts.	$7,700
3130-0471	eMAX Forward body extension for aerial application. Includes a lower double preconnect storage area, upper transverse storage area, center front pump access doors, removable center floor in upper area, upper storage pan, and boom support diamond plate filler panels.	$2,207
3130-0482	eMAX Pump module HP75/78. Includes enclosed pump panel, compt on officer side (opposite pump panel), lower and upper storage areas, center front pump access doors, removable center floor in upper area, storage pan and boom support diamond plate filler panels. Lower storage area to hold (1) tray for 200' of 3" DJ preconnected hose offset to rear and storage area for (2) backboards vertically stored offset forward w/sleeve each side of center pump access. Upper storage area for dry storage.	$7,480
3130-0490	Speedlay/crosslay HP75/78 module(stacked) for triple speedlays and double crosslay above. Includes 44" wide pump panel opening, running boards, upper area dunnage pan, lower storage compartments with push button latches and boom support diamond plate filler panels. Lower for (2) 1.75" speedlays to hold 150' of 1.75" DJ hose in each. Upper for (1) 2.5" speedlay to hold 200' of 2.5" DJ hose. Speedlays to utilize removable tray(s). Upper crosslay storage to hold up to 100' of 1.75" DJ (forward) and 400' of 2.5" DJ (rearward).	$6,995
3134-0006	The single gauge panel on the driver's side of the side mount module is to be hinged downward. Includes two (2) cable hold opens, and latches.	$120
3134-0009	The gauge panel(s) on the driver side of the Side Mount module to be hinged upward. Includes two (2) gas shock hold opens and latches.	$120

3134-0011	Officer side pump panel to be vertically hinged on forward extrusion. Panel(s) to be secured in the closed position with push button latches. Upper panel to be held open with gas shock.	$445
3134-0019	The driver and officer side pump panels are to be painted Zolatone black.	$566
3134-0020	The driver and officer side pump panels are to be painted Zolatone gray.	$566
3134-0028	Pump panel layout and approval drawing to match existing and/or previous unit. To match as close as possible (Engineering and/or vendor requirements may alter final panel layout).	$376
3134-0039	The gauge panel on the driver side pump panel is to be hinged upward. Includes two spring type hold opens, two trigger latches, and a recessed handle.	$120
3134-0053	Officer side pump panel Escutchion Plate shall be attach with Thumb Latch.	$159
3134-0055	Officer side upper pump access panel to be horizontally hinged with stainless steel door. Includes (2) push button latches and (2) hold open devices.	$188
3134-0064	The gauge panel(s) on the driver side of the Side Mount module to be hinged upward. Panel(s) to include (2) mechanical/pneumatic (as applicable to panel size) hold opens and latches.	$120
3134-0072	Driver and officer side mounted pump panels are to be brushed stainless steel.	$487
3134-0082	Driver side pump panel Escutchion Plate shall be hinge and have thumb Latches.	$240
3134-0104	Officer side upper pump access panel behind crosslays to be horizontally hinged with stainless steel door. Includes (2) push button latches and (2) hold open devices.	$188
3134-0106	Officer side pump panel escutchion plate shall be around each discharge, and pump intakes.	$158
3134-0113	Officer side upper pump access panel to be horizontally hinged with aluminum smooth plate door painted Zolatone black both sides. Includes (2) push button latches and (2) hold open devices.	$225
3136-0000	Air horn switch at pump panel. Switch to be labeled "Evacuation Alert". Location: [#LOC].	$125
3136-0001	Backboard storage compartment located to rear of crosslays. Includes vertically hinged diamond plate access door each side.	$924
3136-0002	Microphone box. Locate at the [#LOC].	$441
3136-0003	Microphone box, Cast Products. Locate at/in the [#LOC].	$411
3136-0004	The lower area of the pump compartment to have a four (4) sided heat pan with two (2) removable (side to side) bottoms. Bottoms to be secured in the closed position with mechanical fasteners.	$898
3136-0005	The crosslay divider(s) to be notched both ends for Task Force Nozzle.	$109
3136-0006	Two (2) pump compartment heaters are to be mounted in the pump area. Locate as low as possible.	$1,460
3136-0011	P-Rubber in flex joint(s) between pump module and/or body modules.	$535
3136-0021	Divider in storage pan with adjustable tracks.	$165
3136-0023	Microphone Box Cast Products. Locate at/in the [#LOC].	$436
3136-0025	Microphone box. Dimensions for microphone box are 14" wide x 6.5" high x 5.5" deep. Locate at the [#LOC].	$484
3136-0029	Air horn switch at pump panel. Switch to be labeled "Air Horn". Location: [#LOC].	$125
3136-0033	Crosslay divider(s) to be lowered approx 5" to provide room for bail handled nozzle(s) below cover.	$109
3136-0034	Microphone box 10W X 6H X 11D located on pump operator panel.	$502
3136-0045	Microphone Box Cast Products. Locate at/in the [#LOC].	$436
3136-0047	Backboard storage compartment located to rear of crosslays. Includes vertically hinged smooth plate painted job color access door each side.	$1,135
3136-0051	Air horn switch at pump panel. Switch to be labeled "Code Red". Location: [#LOC].	$125
3136-0056	The crosslay divider(s) to be held 12" short both ends.	$360
3136-0060	Transverse compt over pump panel. Includes lift-up dia plt door on each end with gas shock and D-Ring latch.	$2,053
3136-0061	Heat pan removable bottoms to have screws and nuts in place of butterfly latches.	$244
3136-0062	Crosslay divider(s) to be adjustable front to rear.	$847
3136-0064	The lower area of the pump compartment to have a four (4) sided heat pan with two (2) removable (side to side) bottoms. Bottoms to be secured in the closed position with butterfly latches.	$898
3136-0066	Microphone box. Dimensions for microphone box are 12.5" wide x 8" high x 6" deep. Locate at the [#LOC].	$484
3136-0067	DEF Tank mounting provision in right side of pump compt. Includes tank supports, heat shield and tank fill access either through pump access door or separate door as applicable.	$320
3136-0071	Microphone Box Cast Products. Locate at/in the [#LOC].	$411
3136-0079	Q2B switch at pump panel. Switch to be labeled "Evacuation Alert". Location: [#LOC].	$125
3136-0081	A pump compartment heater with 110V blower to be mounted in the pump area.	$1,137
3136-0085	Cast Products EB0010-1-A microphone box. Locate on driver side pump panel. Hinge door to the right.	$475
3136-0090	Speedlay tray - removable. Tray includes a 1.25" extruded alum handle low on each end of tray and slots down each side to facilitate lifting. The floor of the tray shall have poly slides and be slotted to prevent the accumulation of water and allow for ventilation of wet hose.	$538

3136-0098	Microphone box. Dimensions for microphone box are 12" wide x 12" high x 6" deep. Locate at the [#LOC].	$501
3136-0100	Notched Speedlay divider(s) on the both for connecting preconnect hoses. Notch to be 12"L X 4"H enough room to use a spanner wincher for connecting hoses.	$84
3136-0111	Microphone box. Dimensions for microphone box are 8" wide x 12" high x 6" deep. Locate at the [#LOC].	$484
3136-0114	The running board(s) to be notched for Pistion Intake Valve. Location(s): [#LOC].	$416
3136-0115	The lower area of the pump compartment to have a four (4) sided heat pan with two (2) removable (side to side) bottoms. Lower section of pan designed to provide the maximum amount of ground clearance. Bottoms to be secured in the closed position with butterfly latches.	$898
3136-0116	DEF Tank mounting provision in left side pump compt to the rear of the pump. Includes tank supports and tank fill access door.	$283
3136-0117	P-Rubber in flex joint(s) between pump module and/or body modules. Horizontal across tops and along sides at flex joint(s).	$535
3136-0118	A two (2) piece aluminum pan shall be bolted in place below the pump controls within the pump module. This pan shall utilize .090 aluminum plate to provide a shield to reduce heat loss as the pump controls exit the pump module for the top mount control panel.	$232
3136-0121	Speedlay tray - Polypropylene - removable. Tray includes pull out grab handle (poly dowel) down low on each end to facilitate lifting. The trays shall be made from Polypropylene, the floor of the tray shall be slotted to prevent the accumulation of water and allow for ventilation of wet hose.	$763
3136-0124	Backboard storage compartment located to rear of crosslays. Includes vertically hinged smooth plate painted job color access door each side. Top cover to be smooth plate IPO diamond plate painted black durabak.	$1,182
3136-0125	The officer side pump module upper plate-work shall be smooth plate IPO diamond plate (where E-One logo is mounted).	$106
3136-0126	Microphone box. Dimensions for microphone box are 7.5" wide x 15" high x 11" deep. Locate at the [#LOC].	$484
3136-0130	Speedlay tray - Polypropylene - removable. Tray includes pull out grab handle (poly dowel) down low on each end to facilitate lifting. The tray(s) shall be sized approximately 18" H X 10" W. The tray(s) shall be made from Polypropylene, the floor of the tray shall be slotted to prevent the accumulation of water and allow for ventilation of wet hose.	$763
3200-0054	Heater rear walk-in area. Locate under bench seat in the body interior.	$1,464
3300-0007	Door single vertically hinged painted. Location(s): [#LOC]	$663
3300-0008	Door double vertically hinged painted. Location(s): [#LOC].	$737
3300-0009	Door single vertically hinged diamond plate. Location(s): [#LOC]	$464
3300-0010	Door double vertically hinged diamond plate. Location(s): [#LOC].	$663
3300-0011	Door single horizontally hinged lift-up painted. Location(s): [#LOC]	$644
3300-0012	Door single horizontally hinged lift-up diamond plate. Location(s): [#LOC]	$499
3300-0013	Door roll up short (up to 45") with satin finish POK. Location(s): [#LOC]	$668
3300-0014	Door roll up tall (greater than 45") with satin finish POK. Location(s): [#LOC]	$956
3300-0015	Door roll up short (up to 45") with painted finish POK. Location(s): [#LOC]	$1,070
3300-0016	Door roll up tall (greater than 45") with painted finish POK. Location(s): [#LOC]	$1,355
3300-0017	Door roll up short (up to 45") with satin finish ROM. Location(s): [#LOC].	$744
3300-0019	Door roll up tall (greater than 45") with satin finish ROM. Location(s): [#LOC].	$1,061
3300-0021	Door roll up short (up to 45") with painted finish ROM. Location(s): [#LOC].	$1,261
3300-0022	Door roll up tall (greater than 45") with painted finish ROM. Location(s): [#LOC].	$1,578
3300-0025	Door single horizontally hinged drop down painted. Location(s): [#LOC]. Door(s) will have chain hold open devices.	$532
3300-0030	Door double 3-point vertically hinged painted. Location(s): [#LOC]	$1,472
3300-0062	Keyed compartment door latch with #1250 key. Location(s): [#LOC].	$70
3300-0063	Keyed roll-up compartment door with #1250 key. Location(s): [#LOC].	$124
3300-0064	All apparatus doors, body and chassis, are to be keyed alike. Not avail on Commercial Chassis. Requires keyed latch option to be included in shop order.	$273
3300-0065	Electric lock for an ROM roll-up door (EA). The door to lock on both sides of compartment as applicable. Includes manual J236 key lock. Location(s): [#LOC]	$545
3300-0066	Drip pan for a ROM roll-up door (EA). Location(s): [#LOC].	$149
3300-0078	Cleveland door springs provided for all vertically hinged body doors.	$136
3300-0079	Reverse hinge driver side single forward body compartment door. Includes vertically mounted drip rail along forward area of compartment opening (in addition to the horizontal drip rail above the door opening).	$137
3300-0096	Keyed roll-up compartment door with #J236 key. Location(s): [#LOC]	$124
3300-0097	Keyed compartment door latch with #J236 key. Location(s): [#LOC]	$70
3300-0099	Intergrated sill plate. Water Dam type door sill for ROM rollup door. Location(s):[#LOC]	$127
3300-0103	Door double vertically hinged smooth plate sanded. Location(s): [#LOC].	$737
3300-0105	Door roll up tall (greater than 45") with satin finish Amdor. Location(s): [#LOC].	$1,386
3300-0106	Door roll up short (up to 45") with satin finish Amdor. Location(s): [#LOC].	$992

3300-0107	Pull down straps for lift-up door. Loc: [#LOC].	$91
3300-0117	Reverse hinge officer side single forward body compartment door. Includes vertically mounted drip rail along forward area of compartment opening (in addition to the horizontal drip rail above the door opening).	$137
3300-0120	Electric lock for a ROM roll-up door (EA). The door to lock on both sides of compartment as applicable. Includes manual 1250 key lock. Location(s): [#LOC]	$545
3300-0121	Door bi-fold horizontally hinged painted. Location(s): [#LOC]	$817
3300-0131	Door bi-fold horizontally hinged painted. Location(s): [#LOC]. Includes upper door mounted guide roller assembly and the lower door will have chains for side or upper rear body mount or bumper style for lower rear body mounted.	$914
3300-0133	Door single horizontally hinged drop-down sanded smooth plate. Location(s): [#LOC].	$422
3300-0135	Door double 3-point vertically hinged smooth plate sanded. Location(s): [#LOC]	$1,472
3300-0138	Keyed compartment door latch with #CH751 key. Location(s): [#LOC]	$70
3300-0139	Door double 3-point horizontal hinged painted. Location(s): [#LOC]. Lower door should act as an exterior writing surface, w/ adjustable angles. The paddle latch on the second door shall not protrude past the edge of the door.	$1,472
3300-0140	Door single horizontally hinged drop down diamond plate. Location(s): [#LOC].	$400
3300-0144	Stainless steel door horizontally hinged lift-up painted. Location(s): [#LOC].	$644
3300-0151	Drip pan with drain for a ROM roll-up door (EA). Location(s): [#LOC].	$192
3300-0164	Door double vertically hinged w/rotary latches - painted . Location(s): [#LOC]	$737
3300-0165	Door double vertically hinged w/rotary latches - smooth plate sanded. Location(s): [#LOC].	$737
3300-0166	Door double vertically hinged w/rotary latches - diamond plate. Location(s): [#LOC]	$663
3300-0167	Door double 3-point vertically hinged w/rotary latches - painted. Location(s): [#LOC]	$1,472
3300-0169	Door double 3-point vertically hinged w/rotary latches - smooth plate sanded. Location(s): [#LOC]	$1,472
3300-0174	Keyed roll-up compartment door with #CH751 key. Location(s): [#LOC].	$124
3300-0177	Door single horizontally hinged drop down painted. Door will have 2 D-ring handles. Location(s): [#LOC].	$687
3300-0186	Doors B1/B2 at rear of body to be diamond plate IPO standard. Without pump aerial body only.	$110
3300-0189	Tri-Mark latches IPO quater turn latches. Includes compartments: B1, B2 & ladder tunnel doors.	$283
3300-0190	Reverse hinge driver side single forward upper body compartment door. Includes vertically mounted drip rail along forward area of compartment opening (in addition to the horizontal drip rail above the door opening).	$137
3300-0192	Polished stainless steel overlay on all double pan door's inner pan on body. 95 mid-mount aerial only. Overlay will be full height and should go around latch, gas shock castings and lock cover.	$1,778
3300-0195	Door roll up tall (greater than 45") with painted finish Amdor. Location(s):[#LOC].	$1,881
3300-0196	Door double vertically hinged painted, includes (2) gas shock-style hold-open device IPOS. Location(s): [#LOC].	$795
3300-0197	Door roll up short (up to 45") with painted finish Amdor. Location(s): [#LOC].	$1,669
3300-0202	Door single horizontally hinged drop-down sanded smooth plate. Location(s): [#LOC].	$422
3300-0206	Additional roll up door stop latches shall be mounted for B1 at a raised location aligned with the bottom of the ladder tunnel. The raised latches/hooks shall not be included as part the door ajar circuit.	$64
3305-0000	Diamond plate generator cover.	$895
3305-0001	Cover aluminum (2) piece with recessed handles, SideStacker. Note: This option effects hose bed capacity.	$1,683
3305-0002	Bi-Fold diamond plate cover for the crosslay area. Includes applicable grab handles and (2) hold downs. Non-aerial applications to be tagged as a non-stepping surface.	$784
3305-0003	Single diamond plate cover for the crosslay area. Includes applicable grab handle(s) and (2) hold downs. Non-aerial applications to be tagged as a non-stepping surface.	$530
3305-0006	All hand rails (as applicable) are to have a rubber insert. Includes cab (N/A on commercial chassis), pump module and body.	$1,585
3305-0007	Vinyl [#COL] hose bed cover with attached rear flap(s).	$764
3305-0008	Vinyl [#COL] crosslay cover with attached side flaps.	$268
3305-0010	Compartment underbody. Includes drop down front door with push-button latches. Locate [#LOC].	$1,106
3305-0016	Vinyl [#COL] speedlay side covers.	$179
3305-0017	Nylon black strap on running board suction tray (EA). Location: [#LOC].	$70
3305-0021	Vinyl [#COL] hose bed cover with side bungee cords and attached rear flap(s).	$1,063
3305-0022	Vinyl rear cover for diamond plate hose bed cover. Color: [#COL].	$236
3305-0023	Nylon black cargo net at rear of diamond plate or vinyl hose bed cover.	$498
3305-0024	Vinyl [#COL] side covers for diamond plate crosslay cover.	$167
3305-0025	Nylon black cargo net on sides for crosslay cover.	$198
3305-0028	Vinyl [#COL] cover for running board suction tray. Location: [#LOC].	$167
3305-0029	Nylon black strap on running board suction tray (EA). For use with rolled hose. Location: [#LOC]	$80
3305-0033	Vinyl access cover for fill tower(s).	$176
3305-0034	Vinyl [#COL] hose bed cover without attached rear flap(s). Requires rear cover option.	$647

3305-0038	Vinyl [#COL] crosslay cover top only.	$227
3305-0040	Nylon black strap with clip release on running board suction tray (EA). Location: [#LOC]	$125
3305-0052	Vinyl [#COL] hose bed cover with side snaps and bungee cord attached rear flap(s).	$1,063
3305-0060	Diamond plate cover for running board suction tray(s). Includes push-button latches and gator grip. Location(s): [#LOC].	$332
3305-0062	Cover aluminum (1) piece with recessed handles, SideStacker. Note: This option effects hose bed capacity.	$1,175
3305-0063	Diamond plate cover(s) to protect cascade system valves and fittings located in the upper open storage area.	$510
3305-0064	Nylon black strap with aluminum quick-release buckle for hose tray. Strap to attach to side walls of tray down low as applicable. Location: [#LOC].	$102
3305-0066	Vinyl cover for front headboard opening. Cover to be black with twist locks in the corners and snaps on the sides.	$227
3305-0067	Vinyl cover for open storage area. Color: [#COL]	$647
3305-0068	Vinyl [#COL] hosebed cover with attached rear flap(s). Cover to have snaps and velcro along front (no awning attachment) and sides. No twist locks. The rear bungees to be tie-in versus sown (use ilets sized to secure a looped and tied bungee). Bungee to be easily removed and replaced (by fire department) in field.	$1,294
3305-0070	Diamond plate portable pump cover.	$1,089
3305-0080	Diamond plate cover for running board suction tray(s). Includes push-button latches and gator grip. Includes cords to prevent covers from dropping to the ground when removed. Location(s): [#LOC].	$365
3305-0094	Fire Retardent Vinyl [#COL] crosslay cover with attached side flaps.	$534
3305-0124	Vinyl [#COL] crosslay cover with attached side flaps. Cover to have velcro on the top IPO snaps.	$268
3305-0128	Vinyl rear cover for diamond plate hosebed cover. Cover to be attached with snaps. Color: [#COL].	$333
3305-0129	Nylon black strap with aluminum quick release buckle (EA) for hose bed hose retention at rear. If hose bed divider is supplied there shall be a set on either side of divider to maintain tension on hose without interference of divider (if applicable).	$296
3305-0130	Vinyl [#COL] crosslay cover with attached side flaps. Cover to have snaps and velcro on the top. No twist locks. The side bungees to be tie-in versus sown (use ilets sized to secure a looped and tied bungee). Bungee to be easily removed and replaced (by fire department) in field.	$454
3305-0142	Vinyl red side covers for diamond plate crosslay cover. Covers to attach to the DP cover with snaps. The lower corners to have bungee cords. Cords are to be tie-in versus sown. Flaps to have eyelets sized to secure individual looped and tied bungees. Cords to be easily removed and replaced (by fire department) in field.	$273
3305-0143	Vinyl rear cover for diamond plate hosebed cover. Cover to attach to the DP cover with snaps. The lower edge to have bungee cords. Cords are to be tie-in versus sown. Flap to have eyelets sized to secure individual looped and tied bungees. Cords to be easily removed and replaced (by fire department) in field. Color: Red	$347
3305-0147	Nylon yellow strap with aluminum quick-release buckle for hose tray. Strap to attach to side walls of tray down low as applicable. Location: [#LOC].	$102
3305-0149	Nylon yellow cargo net on sides for crosslay cover. Cover to have snaps in place of bungees.	$278
3305-0150	Nylon yellow cargo net at rear of diamond plate or vinyl hosebed cover. Cover to have snaps in place of bungees.	$532
3305-0165	Aluminum plate rear cover for diamond plate hosebed cover. Drop down with gasket along sides and top. Includes 1/4 turn D-Ring latch. Hose bed aluminum cover shall be provided with an extrusion at rear of cover for door`s top gasket to seal against when door is closed. Door to match rear body finish. Note: on HP75/78 SideStacker, when door is open adjacent doors must be closed.	$445
3305-0166	Nylon black strap with aluminum quick-release buckle for hose tray. Strap to attach to side walls of tray down low as applicable. For use with rolled hose. Location: [#LOC].	$112
3305-0168	Vinyl [#COL] hose bed cover with side bungee cords without attached rear flap(s). Requires rear cover option.	$947
3305-0173	Cargo Net for inside R3 compartment for containing cribbing in compartment when door is opened. Net to permenantly fasten on rearward wall just inside door opening and fasten with twist locks on forward wall just inside door opening. Cargo netting will be 3"x3" squares. See photo in shop order file.	$730
3305-0174	Single diamond plate cover for the crosslay area. Includes applicable grab handle(s) and (2) hold downs. Cover to be embossed diamond plate.	$583
3305-0175	Vinyl fire retardent [#COL] hose bed cover with attached rear flap(s).	$954
3305-0176	Vinyl fire retardent [#COL] side covers for diamond plate crosslay cover.	$209
3305-0177	Vinyl fire retardent [#COL] cover for running board suction tray. Location: [#LOC].	$209
3305-0180	Vinyl [#COL] hose bed cover with side bungee cords and attached rear flap(s). Includes large pull tabs to ease securing cover while wearing gloves.	$1,161
3305-0183	Vinyl [#COL] crosslay cover with attached side flaps with bungee cord.	$334

3305-0184	Vinyl [#COL] side covers for diamond plate crosslay cover. Includes large pull tabs to ease securing end flaps while wearing gloves.	$167
3305-0186	Nylon red cargo net on sides for crosslay cover.	$220
3305-0187	Nylon red cargo net at rear of diamond plate or vinyl hose bed cover.	$525
3305-0188	Nylon black strap with footman loops and Velcro closure to secure hose. Location: [#LOC].	$80
3305-0189	The rear flap(s) of the hosebed cover shall be upgraded to add weight to the bottom of the rear vertical flap(s).	$474
3305-0191	Vinyl rear cover for diamond plate hose bed cover using California Type 3 straps IPOS. Color: [#COL].	$362
3305-0192	Vinyl rear cover for hose chute(s). Color: [#COL]. Includes large pull tabs to ease securing cover while wearing gloves.	$236
3305-0193	Hold open device(s) shall be provided. Rubber plunger type hold downs(s) shall hold the aluminum crosslay cover(s) (single or bi-fold) in the open position.	$183
3305-0194	Bi-Fold diamond plate cover for the crosslay area. Includes applicable grab handles, (2) hold downs and magnetic door ajar switch(s). Non-aerial applications to be tagged as a non-stepping surface.	$891
3305-0200	Vinyl [#COL] end covers for upper outboard hose storage of the hosebed.	$167
3305-0201	Bi-Fold 1/8" smooth plate cover for the crosslay area. Includes applicable grab handles and (2) hold downs. The cover to be painted black durabak. Non-aerial applications to be tagged as a non-stepping surface.	$940
3305-0203	Nylon black strap with aluminum quick-release buckle for tailboard hose tray(s). Strap to attach to side walls of tray down low as applicable.	$102
3305-0205	Vinyl [#COL] side covers for diamond plate crosslay cover. Covers to attach to the DP cover with snaps. The lower corners shall be secured in place using California type straps (2) each side IPOS. These straps shall function to allow each strap to be looped around the horizontal crosslay roller on each side as part of the attach system.	$339
3305-0206	Vinyl [#COL] hose bed cover using Nitrogen/Oxygen type straps (2) attach positions each side (4) total to secure the rear flap(s) IPOS. The upper straps shall be sewn in place leaving the ratchet clamp approximately half way or mid height of the rear flap(s). The bottom straps shall be fastened to a strap tie down mounted slightly above the horizontal handrail in line with the sewn in straps above (4) total top and (4) total bottom. The bottom straps shall feed directly above to the ratchet clamps (sewn in) as part of the attach/securing system.	$1,451
3305-0207	Vinyl [#COL] hose bed cover with side bungee cords for main hose bed storage area. Seperate cover w/snaps and attached rear flap for hose chute(s). Aerial application only.	$1,063
3305-0208	Cargo net for inside compartment for containing cribbing in compartment when door is opened. Net to permanently fasten on rearward wall just inside door opening and fasten with buckle straps on forward wall just inside door opening. Cargo netting will be 3" x 3" squares. Location: [#LOC].	$730
3305-0212	Vinyl fire retardent [#COL] hosebed cover with twist locks fasteners and bungee cord attached rear flap(s). Cover to be partial hosebed cover leaving hosebed walkway area uncovered. To extend full length of the hosebed from roof top compartment on the side to divider against walkway in the middle and to hosebed storage pan rearward mounting flange at the front.	$1,233
3305-0214	Nylon black cargo net at rear of diamond plate or vinyl hose bed cover. Notched for hosebed storage compartment(s) and door(s) as required.	$498
3305-0215	Vinyl [#COL] hose bed cover with attached rear flap(s). Cover to have snaps and velcro along front (NO awning attachment) and velcro along sides. No twist locks.	$764
3310-0000	Compartments driver side tandem axle HP SideStacker. Includes rescue style compartments.	$35,383
3310-0001	Compartments driver side tandem axle HP SideStacker. Includes rescue style extended height compartments.	$37,653
3310-0002	Compartments driver side CR100/95 platform SideStacker with 300g tank. Includes rescue style compartments.	$34,575
3310-0003	Compartments driver side CR100/CR137/95 platform SideStacker with 300g tank. Includes rescue style extended height compartments.	$37,094
3310-0004	Compartments officer side tandem axle HP SideStacker. Includes low side compartments with full length extended hosebed. Decreases height of compartments R1 and R2.	$21,677
3310-0005	Compartments officer side tandem axle HP SideStacker. Includes low side compartments with full length hosebed. Decreases height of compartments R1 and R2.	$20,416
3310-0006	Compartments officer side tandem axle HP SideStacker. Includes rescue style compartments ahead of wheel well, with extended hosebed.	$25,423
3310-0007	Compartments officer side tandem axle HP SideStacker. Includes rescue style compartments ahead of wheel well with standard hosebed.	$24,160
3310-0008	Compartments officer side tandem axle HP SideStacker. Includes rescue style extended height compartments ahead of wheel well with extended hosebed.	$27,348
3310-0009	Compartments officer side tandem axle HP SideStacker. Includes rescue style extended height compartments ahead of wheel well with standard hosebed.	$28,630

3310-0010	Compartments officer side CR100/95 platform SideStacker with 300g tank. Includes low side compartments with full length extended hosebed. Decreases height of compartments R1 and R2.	$21,385
3310-0011	Compartments officer side CR100/95 platform SideStacker with 300g tank. Includes low side compartments with full length hosebed. Decreases height of compartments R1 and R2.	$20,279
3310-0012	Compartments officer side CR100/95 platform SideStacker with 300g tank. Includes rescue style compartments ahead of wheel well, with extended hosebed.	$24,464
3310-0013	Compartments officer side CR100/95 platform SideStacker with 300g tank. Includes rescue style compartments ahead of wheel wells with standard hosebed.	$23,353
3310-0014	Compartments officer side CR100/CR137/95 platform SideStacker with 300g tank. Includes rescue style extended height compartments ahead of wheel well with extended hosebed.	$26,504
3310-0015	Compartments officer side CR100/95 platform SideStacker with 300g tank. Includes rescue style extended height compartments ahead of wheel well with standard hosebed.	$25,396
3310-0017	Auxiliary jack pad 24X24 (PR) with side mounted handle. Includes mounting brackets.	$1,036
3310-0018	Auxiliary jack pads 24X24 (4). Includes pads with side mounted handle and mounting brackets to store (2) each side of the body next to front drop down jacks.	$1,480
3310-0020	Step fold-down rear (EA).	$825
3310-0021	Step flop down rear 24" wide rung type (EA).	$508
3310-0022	Step flop down rear 12" wide rung type (PR).	$857
3310-0023	Step pocket flop down rear (PR).	$1,031
3310-0024	Tailboard 12" bolt on-G067. Includes handrail below hosebed and (1) underbody ground light on the officer's side.	$639
3310-0026	Contoured beavertail compartments. Door opening raised for warning light.	$3,316
3310-0029	Auxiliary jack pad 26X26 (4) with side mounted handle. Includes (2) double mounting brackets.	$1,774
3310-0032	Recessed tubes for (6) pike poles. Not available on HP75 SideStacker.	$570
3310-0033	Pike pole/ladder storage. Available on HP75 SideStacker only. The access door to match the rear body finish.	$570
3310-0036	Rollup rear ladder compartment door with satin finish for SideStacker aerial. Includes hinged ladder retention plate.	$1,609
3310-0037	Rear ladder tunnel doors. Vertically hinged diamond plate.	$617
3310-0040	Notch compartment R2 in deep area above jack leg to allow for routing of hydraulic generator hoses.	$288
3310-0041	Compartments driver side CR100/95 platform SideStacker with 500g tank. Includes rescue style compartments.	$34,575
3310-0042	Compartments driver side CR100/95 platform SideStacker with 500g tank. Includes rescue style extended height compartments.	$37,094
3310-0043	Compartments officer side CR100/95 platform SideStacker with 500g tank. Includes low side compartments with full length extended hosebed. Decreases height of compartments R1 and R2.	$21,385
3310-0044	Compartments officer side CR100/95 platform SideStacker with 500g tank. Includes low side compartments with full length hosebed. Decreases height of compartments R1 and R2.	$20,279
3310-0045	Compartments officer side CR100/95 platform SideStacker with 500g tank. Includes rescue style compartments ahead of wheel well, with extended hosebed.	$24,464
3310-0046	Compartments officer side CR100/95 platform SideStacker with 500g tank. Includes rescue style compartments ahead of wheel wells with standard hosebed.	$23,353
3310-0047	Compartments officer side CR100/95 platform SideStacker with 500g tank. Includes rescue style extended height compartments ahead of wheel well with extended hosebed.	$26,504
3310-0048	Compartments officer side CR100/95 platform SideStacker with 500g tank. Includes rescue style extended height compartments ahead of wheel well with standard hosebed.	$25,396
3310-0049	Auxiliary jack pad 24X24 (4) with side mounted handles. Includes welded mounting brackets.	$2,070
3310-0050	Crosslay triple 5.5" wide single stack to hold up to 200' of 2.0" DJ (each) or 150'-200' 2.5" DJ (each). Includes storage pan to rear of crosslays	$3,235
3310-0051	Crosslay double to hold up to 200' of 2.0" DJ (each). Includes storage pan to rear of crosslays.	$2,384
3310-0052	Crosslay double 5.5" wide single stack to hold up to 200' of 2.0" DJ (each) or 150'-200' 2.5" DJ (each). Includes storage pan to rear of crosslays.	$2,384
3310-0053	Crosslay double to hold up to 400' of 2.0" DJ (each). Includes storage pan to rear of crosslays.	$2,794
3310-0054	Crosslay triple to hold up to 200' of 2.0" DJ (each). Includes storage pan to rear of crosslays.	$3,235
3310-0055	Crosslay double w/dry lay. Includes (2) 5.5" wide single stack crosslays to hold up to 200' of 2.0" DJ or 150'-200' 2.5" DJ (each) and (1) 11" wide dry lay for up to 300' of 3.0" DJ. Includes storage pan to rear of crosslays.	$3,235
3310-0056	Crosslay Double (1) Single (1) Double Stacked Midmount. Forward lay 5.5"W x 18"D to hold up to 200' of 2" DJ. Rearward lay 11.25"W x 18"D to hold up to 600' of 1.75" or 350' of 2.5" DJ. Midmount only.	$2,398
3310-0057	Crosslay double to hold up to 400' of 2.0" DJ (each).	$2,398
3310-0058	Crosslay triple 5.5" wide single stack to hold up to (2) 200' of 2.0" DJ (each) and up to 200' 2.5" DJ.	$2,560

3310-0059	Storage box at rear of body for handheld jack control 12W x 13H x 8D. Locate below extended top step. Material to be the same as rear body surface.	$302
3310-0060	Boxed out rear ladder tunnel doors. Vertically hinged diamond plate.	$970
3310-0061	Crosslay triple (2) 4.25" wide single stack to hold up to 200' of 2.0" DJ (each) and (1) 5.5" wide to hold up to 150'-200' 2.5" DJ. Includes storage pan to rear of crosslays	$3,235
3310-0062	Rectangular beavertail compartments with double pan door opening to outside. Door opening raised for warning light.	$3,320
3310-0066	Cover plate over hydraulic generator lines located towards front of compartment below generator.	$222
3310-0068	Rollup rear ladder compartment door for SideStacker aerial painted job color. Includes hinged ladder retention plate.	$2,126
3310-0069	Rear ladder tunnel doors. Vertically hinged smooth plate to match rear body finish.	$777
3310-0070	Rear ladder tunnel door. Smooth plate lift up door to open 20 degrees past horizontal. Door will match rear body finish.	$815
3310-0071	Boxed out rear ladder tunnel doors. Vertically hinged smooth plate. Doors to match rear body finish.	$1,186
3310-0072	Compartments driver side HP100 Platform SideStacker with 300g tank. Includes rescue style extended height compartments. The door on small compts next to rear outrigger to match wheelwell.	$37,094
3310-0073	Compartments officer side HP100 Platform SideStacker with 300g tank. Includes rescue style extended height compartments ahead of wheel well with extended hosebed.	$26,504
3310-0074	Compartments officer side HP100 Platform SideStacker with 300g tank. Includes rescue style extended height compartments ahead of wheel well, compartment over forward tandem and extended hosebed.	$27,581
3310-0075	Upper dunnage area extension 34 x 58 diamond plate.	$489
3310-0076	Body wheelwell compartments (4) approx 24" W x 6" H x maximum depth permissible without interference with hydraulic line(s) reservoir(s) etc. A gasketed drop down door shall be installed on each compartment. Door material to match wheelwell finish.	$1,250
3310-0079	Stainless steel trim on bottom edge of rear ladder tunnels, turntable access and pike pole compartment openings.	$438
3310-0080	Crosslay triple (2) 5.5" wide single stack to hold up to 200' of 2.0" DJ (each) and (1) 10.5" wide to hold up to 300'-400' of 2.5" DJ. Includes storage pan to rear of crosslays	$3,235
3310-0081	Jack leg opening cover diamond plate (4). Includes diamond plate outrigger cover and diamond plate filler panel.	$739
3310-0082	Wall at rear of upper open storage area bolt-in 3/16 Dia Plt. with diamonds facing rear.	$334
3310-0083	Rear double beavertail handrails (outer handrail only) to be extended up and wrap up over top of body approx 10".	$184
3310-0084	All tags on body to be mechanically attached with S/S screws and nuts.	$716
3310-0085	Compartment at right rear of body for storage of tethered horn control. Locate above pike pole compartment.	$328
3310-0086	Label package for Memphis aerial - Includes the following: Labeling of items behind removable / hinged panels (including relays); Labels on driver and officer seat risers stating: "NO ELECTRICAL COMPONENTS INSTALLED IN THIS AREA"; Label on electrical cover at center of dash stating: PC BOARD, LOAD MANAGER & FUSE FOR RADIO BEHIND THIS ACCESS COVER"; Special cab tilt tags to read: "CHECK LOOSE ITEMS IN CAB. CHECK QUARTZ LIGHTS AND MOVE AERIAL BEFORE TILTING CAB (if equipped). THIS IS A TWO PERSON OPERATION" located on cab tilt door and on officer's side dash; Tag in cab listing front GAWR, rear GAWR and total GVWR; Tag in cab listing OAL, OAH and OAW; Tag next to hyd oil fill stating: HYDRAULIC OIL"; Tags on rear wall next to each light and driver's side dash stating: "LOWER POLE COMPLETELY DOWN PRIOR TO TILTING CAB" (if equipped). Tags to be mechanically fastened.	$1,280
3310-0087	Boxed out rear ladder tunnel doors. Vertically hinged diamond plate with lowered D-rings and gas shocks. Includes recess above doors for directional light.	$1,474
3310-0089	Compartments officer side CR100/95 platform SideStacker with 300g tank. Includes rescue style extended height compartments ahead of wheel well with extended hosebed and optional R3 compartment above forward tandem.	$27,581
3310-0095	Rear ladder tunnel doors. Vertically hinged diamond plate with slam latch style d-ring assemblies.	$681
3310-0096	Doors for rear master and jack control controls. Doors will match rear body finish.	$355
3310-0099	Jack leg covers painted job color. Includes (2) painted extension covers and (2) painted fixed covers.	$1,481
3310-0100	Enclosed pump panels. Upper door opening stepped up to allow crosslays to be accessed from inside compartment. Includes hinged diamond plate crosslay cover.	$7,487
3310-0101	Smooth plate fixed panels rear of tandem axle painted job color.	$166
3310-0102	Recessed storage for (6) pike poles. Includes box at upper left rear of body for (2) D-handled 6' poles, (1) recessed tube on the left side below 6' poles for a 12' pole, and (3) recessed tubes below right side hose chute for (2) 10' poles and (1) 12' pole. For use with center HB 4-jack aerial body with sgl chute.	$1,372

3310-0103	Crosslay single w/dry lay. Includes (1) dbl stack for 200' of 2.0" DJ in forward lay and (1) 20" wide dry lay for up to 400' of 2.5" DJ. Includes storage pan to rear of crosslays.	$3,235
3310-0104	Crosslay double, forward lay 7.5" w x 18" d to hold up to 400' of 2" DJ. Rearward lay 9.25" w x 18" d to hold 350' of 2.5" DJ. Midmount only.	$2,398
3310-0105	Crosslay double w/dry lay. Includes (2) 4.25" wide single stack crosslays to hold up to 200' of 2.0" DJ (each) and (1) 5.5" wide dry lay for up to 200' of 2.5" DJ. Includes storage pan to rear of crosslays.	$3,235
3310-0106	Rear ladder tunnel doors. Horizontally hinged drop down diamond plate.	$617
3310-0107	Transverse compartment floor to be extended out to door opening in L1/R1.	$742
3310-0108	Pan shallow for generator. Locate at front of open storage area.	$563
3310-0109	Auxiliary jack pad 24X24 (4) with side mounted handles. Includes mounting brackets that are bolted to body.	$2,432
3310-0110	Boxed out rear ladder tunnel doors. Horizontally hinged diamond plate (drop down).	$970
3310-0111	Recessed tubes for (4) pike poles. Not available on HP75 SideStacker.	$457
3310-0113	Upper body side panels to be smooth plate painted job color IPO D.P.	$669
3310-0114	Crosslay triple (2) 5.5" wide single stack to hold up to 200' of 2.0" DJ or 150'-200' 2.5" DJ (each) and (1) 11" wide double stack for up to 300' of 3.0" DJ. Includes storage pan to rear of crosslays.	$3,235
3310-0115	Jack leg covers polished stainless steel. Includes (2) polished stainless steel extension covers and (2) painted fixed covers.	$1,623
3310-0116	Transverse compartment floor to be extended out to approx 4" from inside of door opening in L1.	$493
3310-0117	Pikepole/backboard storage. Available on HP75/78 SideStacker only. The access door to match the rear body finish.	$570
3310-0118	Crosslay triple w/dry lay. Includes (2) 5.5" wide single stack crosslays to hold up to 200' of 2.0" DJ (each), (1) 6" wide single stack crosslay to hold up to 150'-200' 2.5" DJ and (1) 6" wide dry lay for up to 150-200' of 3.0" DJ. Includes storage pan to rear of crosslays if applicable.	$4,086
3310-0119	Auxiliary jack pad 24X24x1.5 poly (4) with textured finish and rope handles. Includes mounting brackets (welded on).	$2,769
3310-0120	Transverse compartment floor to be extended out to door opening in R1.	$371
3310-0123	Crosslay double w/dry lay. Includes (2) 5.5" wide single stack crosslays to hold up to 200' of 2.0" DJ or 150'-200' 2.5" DJ (each) and (1) 5.5" wide dry lay for up to 150-200' of 2.5" DJ. Includes storage pan to rear of crosslays.	$3,235
3310-0127	Crosslay quad w/dry lay. Includes (3) 5.5" wide single stack crosslays to hold up to 200' of 2.0" DJ or 150'-200' 2.5" DJ (each) and (1) 6" wide dry lay for up to 150-200' of 3.0" DJ. Includes storage pan to rear of crosslays if applicable.	$4,086
3310-0128	Pike pole/Ladder storage. Available on HP75/78 SideStacker with tall R1 & HM100/110 SideStacker only. The access door to match the rear body finish.	$570
3310-0129	Crosslay triple to hold 400' of 1.75" DJ (each) in two forward lays and up to 300' of 2.5" DJ in rear lay. Includes storage pan to rear of crosslays.	$3,235
3310-0130	Crosslay quad with (2) 4.25" wide single stack to hold up to 200' of 2.0" DJ (each) and (2) 5.5" wide to hold up to 150'-200' 2.5" DJ (each). Includes storage pan to rear of crosslays	$4,086
3310-0131	Upper storage box w/hinged cover (PR). Boxes to be dia plt approx 20" wide x 72" long x 11" deep. Lid to be hinged on outboard side with a gas spring hold-open and chrome grab handle offset to the rear. Left side compt to have a full length divider centered side to side. Locate on top of the body between the upper transverse compartments and the turntable.	$2,861
3310-0132	Hose storage box w/hinged cover. Box to be dia plt approx 18" wide x 64" long x 8" deep. Lid to be hinged on outboard side with a gas spring hold-open and chrome grab handle. Floor to have extruded alum slats. Locate on top of body left side offset forward.	$1,007
3310-0133	Storage boxes above officer side recessed side mount ladder offset rearward. Provide (3) diamond plate storage boxes with drop down doors and D-ring latches. Two rearward boxes to be approx 80" wide each with remaining space for third box.	$2,282
3310-0134	Rear ladder tunnel doors. Vertically hinged diamond plate. Doors to hinge on outboard sides and latch in the middle. D-ring to be on right hand "prmary" door.	$617
3310-0135	Recessed tubes for (6) 16' pike poles. Tubes to have locking slots to hold poles in compt IPO doors.	$800
3310-0136	Compartments officer side tandem axle HM SideStacker with 300 gallon tank. Includes rescue style extended height compartments ahead of wheel well, compartment over forward tandem and extended hosebed.	$28,425
3310-0137	Compartments driver side tandem axle HM100/110 SideStacker with 300 gallon tank. Includes rescue style extended height compartments.	$37,653
3310-0138	Crosslay double (2) 4.25" wide single stack to hold up to 200' of 2.0" DJ (each). Includes storage pan to rear of crosslays	$2,384
3310-0139	Pikepole/Ladder storage. Holds (4) pike poles and (1) 10' attic with shoes. Available on rear mount platform only. The access doors to match the rear body finish.	$1,017
3310-0140	Crosslay double (1) 7.5" wide double stack to hold up to 400' of 2.0" DJ and (1) 10.5" wide to hold 300'-400' of 2.5" DJ. Includes storage pan to rear of crosslays.	$2,794

3310-0141	Body wheelwell compartments (4). Driver side forward, driver side rearward and officer side rearward approx 24" W x 6" H x 26" D. Officer side forward approx 48" W x 6" H x 26" D. All with drop down doors. Door material to match wheelwell finish. N/A with 8 SCBA tubes (6 max).	$2,020
3310-0142	Compartments officer side CR100/95 platform SideStacker with 500g tank. Includes rescue style extended height compartments ahead of wheel well with extended hosebed and optional R3 compartment above forward tandem.	$27,581
3310-0144	Rear ladder tunnel doors. Vertically hinged smooth plate aluminum. Doors to hinge on outboard sides and latch in the middle. D-ring to be on right hand "primary" door.	$617
3310-0145	Storage boxes above officer side recessed side mount ladder offset rearward. Provide (2) diamond plate storage boxes with drop down doors and D-ring latches. Boxes to be approx 93" wide each.	$2,242
3310-0147	Compartments officer side HP100 SideStacker 3" lowered body with 450g tank. Includes rescue style extended height compartments ahead of wheel well with extended hosebed and optional R3 compartment above forward tandem.	$30,266
3310-0148	Compartments driver side tandem axle HP SideStacker 3" lowered body with 450g tank. Includes rescue style extended height compartments.	$39,598
3310-0149	Fixed diamond plate cover at front of hosebed approx 24'' long.	$508
3310-0151	Crosslay triple 7.5w x 23d (to 3x3) to hold up to 400' of 2.0" DJ (each). Includes storage pan to rear of crosslays.	$3,645
3310-0152	Crosslay dry storage. Includes 20"W storage area and storage pan to rear of crosslay.	$3,235
3310-0153	Hose storage box w/hinged cover. Box to be dia plt approx 18" wide x 64" long x 8" deep. Lid to be hinged on outboard side with a gas spring hold-open and chrome grab handle. Floor to have extruded alum slats. Locate on top of body right side offset forward.	$1,007
3310-0154	Recessed tubes for (8) pike poles. Tubes to be sized for (2) 6', (2) 8', (2) 10', and (2) 12' poles.	$760
3310-0155	Body wheelwell compartments (2) above forward tandem approx 24" W x 6" H x 26" D with drop down doors. Door material to match wheelwell finish.	$698
3310-0157	(8) pike pole style tubes to provide storage for brooms, shovels etc. Assembly located in L1/R1 bolted to bottom of transverse shelf. Tubes to be spaced down 2" and recessed in from inside of door opening by 10" on each side. Includes warning label (569518) on each side of compartment.	$760
3310-0158	Recessed tubes for (6) 12' pike poles. Tubes to have locking slots to hold poles in compt.	$701
3310-0159	Side intake panels Zolatone black. HP95MM no tank/pump only.	$286
3310-0160	Crosslay triple w/dry lay. All to be 31" deep (to 3x3) with approx 28" high dividers. Includes (2) 4.25" wide single stack crosslays to hold 200' of 1.75" DJ (each), (1) 5.5" wide single stack crosslays to hold 200' of 2.5" DJ and (1) 5.5" wide dry lay for 200' of 2.5" DJ. Includes storage pan to rear of crosslays if applicable.	$4,497
3310-0164	Compartments driver side tandem axle HM100/110 SideStacker with 500 gallon tank. Includes rescue style extended height compartments (L1-L3).	$38,139
3310-0165	Compartments officer side tandem axle HM SideStacker with 500 gallon tank. Includes rescue style extended height compartments ahead of wheel well, compartment over forward tandem (extended height) and extended hosebed.	$28,912
3310-0166	Crosslay quad with (3) 4.25" wide single stack to hold up to 200' of 2.0" DJ (each) and (1) 5.5" wide to hold up to 150'-200' 2.5" DJ. Includes storage pan to rear of crosslays.	$4,086
3310-0167	Fixed diamond plate cover at front of hosebed approx 12'' long.	$508
3310-0168	Crosslay triple 28" deep (to 3x3). Includes (2) 4.25" wide single stack to hold up to 250' of 1.75" DJ(each) and (1) 8.75" wide dbl stack to hold 500' of 1.75" DJ. Includes storage pan to rear of crosslays.	$4,351
3310-0169	Pikepole/Ladder storage. Holds (2)6' APH6, (2)8' APH8, (2)12' APH12 Fire Hooks Unlimited Inc. pike poles and (1) FL-10 attic ladder. Available on HP75 SideStacker only. The access door to match the rear body finish.	$570
3310-0170	Crosslay Quad (3) 4.25" wide single stack to hold up to 200' of 2.0" DJ each and (1) 10.5 wide double stack to hold up to 300' of 2.5" DJ. Includes storage pan to rear of crosslays.	$4,312
3310-0172	Diamond plate trim plate at top of SideStacker hosebed to simiulate compartment top.	$234
3310-0173	Fuel fill door at rear of body. Finish to match rear of body.	$250
3310-0174	Provide gas shock for rear ladder tunnel doors at rear of body. To keep doors open when ladders are being deployed.	$153
3310-0175	Body wheelwell compartments (4) approx 26" W x 5" H x 26" D with drop down doors. Door material to match wheelwell finish.	$1,588
3310-0176	Transverse compartment floor to be extended out to approx 12" from inside of door opening in L1/R1.	$493
3310-0177	Pikepole/tool storage. Holds (3) pike poles and (3) Akron Brass Rubbish Hooks. Available on rear mount platform only. The access doors to match the rear body finish.	$1,017
3310-0178	Crosslay triple (2) 4.25" wide single stack to hold up to 200' of 2.0" DJ (each) and (1) 11" wide dbl stack to hold 300' of 3" DJ. Includes storage pan to rear of crosslays	$3,235
3310-0179	Cover plate over hydraulic generator lines located towards rear of compartment below generator.	$222

3310-0181	Crosslay triple (2) 7.50" wide double stack to hold up to 400' of 1.75" DJ (each) and (1) 5.5" wide single stack to hold up to 150'-200' 2.5" DJ. Includes storage pan to rear of crosslays	$3,645
3310-0182	Crosslay triple w/dry lay. Includes (2) 10w x 18d (to 3x3) double stack to hold up to 400' of 1.5" DJ or 250-300' of 2.5" DJ each and (1)16"w x 18d (to 3x3) wide dry lay. Does NOT include space for a dunnage pan to rear of crosslays.	$2,298
3310-0183	Recessed tubes for (6) pike poles (2)6', (2)8', (1)12' & (1)14'. Note 14' pike pole located officer side storage at bottom position. Not available on HP75 SideStacker.	$764
3310-0187	Compartments officer side CR100/95 platform with 300g tank. Includes rescue style extended height compartments.	$38,067
3310-0188	Rear SideStacker body access doors (4) to have single pan doors with slam style compartment latches.	$551
3310-0189	Storage box w/hinged cover. Box to be dia plt approx 13" wide x 96" long x 10" deep. Lid to be hinged on outboard side with slat flooring, gas spring hold-opens and chrome grab handle. Locate on top of right side extended high compartments offset rearward.	$864
3310-0190	Auxiliary jack pad 24X24 (PR) with side mounted handle and 2x2 aluminum angles welded to form u-shaped channel for jack foot. Includes mounting brackets. Note: Truck is not to be driven with pads on jack feet.	$1,134
3310-0192	Hose storage box w/hinged covers hinged on outboard side. Box to be dia plt approx 9" wide x 132" long x 14" deep. Cover to be two piece split in the middle with tab permanently attached to underside surface of one of the covers to support the other cover. Includes gas spring hold-opens, chrome grab handles and (2) butterfly latches for each cover. Floor to have extruded alum slats. Locate on top of body right side offset as far forward as possible.	$1,431
3310-0195	Compartments officer side tandem axle HP SideStacker. Includes rescue style extended height compartments ahead of wheel well with extended hosebed and optional R3 compartment above forward tandem.	$30,817
3310-0196	Notch compartment L2 in deep area above jack leg to allow for routing of hydraulic generator hoses.	$288
3310-0198	Crosslay double to hold up to 200' of 2" DJ (each). Includes storage pan to rear of crosslays. Stainless steel product.	$2,765
3310-0199	Crosslay triple 5.5" wide single stack to hold up to 200' of 2" DJ (each) or 150'-200' 2-1/2" DJ (each). Includes storage pan to rear of crosslays. Stainless steel product.	$3,753
3310-0200	Crosslay double 5.5" wide single stack to hold up to 200' of 2" DJ (each) or 150'-200' 2.5" DJ (each). Includes storage pan to rear of crosslays. Stainless Steel product.	$2,765
3310-0201	Crosslay double w/dry lay. Includes (2) 5.5" wide single stack crosslays to hold up to 200' of 2" DJ or 150'-200' 2.5" DJ (each) and (1) 11" wide dry lay for up to 300' of 3.0" DJ. Includes storage pan to rear of crosslays. Stainless Steel product.	$3,753
3310-0202	Crosslay double to hold up to 400' of 2" DJ (each). Includes storage pan to rear of crosslays. Stainless steel product.	$3,241
3310-0203	Crosslay triple (2) 4.25" wide single stack to hold up to 200' of 2" DJ (each) and (1) 5.5" wide to hold up to 150'-200' 2.5" DJ. Includes storage pan to rear of crosslays. Stainless steel product.	$3,753
3310-0204	Notch compartment R3 in deep area below compartment depth change offset to forward wall to allow for routing of hydraulic generator hoses.	$288
3310-0205	Additional "Safe Operating Grade Indicator" gauge shall be provided, gauge is in addition to gauge at rear of body. To be located side facing at rear of body midway up on body panel above corner tailboard. Aerial body only.	$103
3310-0206	Crosslay double. Both lays 10.875"W x 23"D (to 3x3) to hold up to 300-350' of 2.5" (each) or 300' of 3" DJ (each). Includes storage pan to rear of crosslays if applicable.	$2,794
3310-0207	Crosslay triple extra deep. All to be 31" deep (to 3x3) with approx 28" high dividers. Includes (2) 4.25" wide single stack crosslays to hold 200' of 1.75" DJ (each), (1) 5.5" wide single stack crosslays to hold 200' of 2.5" DJ. Includes storage pan to rear of crosslays if applicable.	$3,636
3310-0208	Jack leg opening covers smooth plate painted job color (2) sets. Includes outrigger covers and fixed filler panels.	$990
3310-0209	Forward jack pad access doors painted outside surface job color and inside surface zolatone gray IPO diamond plate. 95 Mid-mount only.	$385
3310-0210	Storage at rear of body in rear tow eye compartment for Junkin MIL-8131-W stokes basket and (2) two pike pole tubes for (1)10' and (1)12' poles. 95' Mid-Mount only.	$432
3310-0211	Diamond plate storage box with hinged lid to outside for (2) K12 power cut saws. Box to be approx 48L x 18W x 18H includes butterfly latch, gas shock hold-upen and chrome grab handle. Locate on top of body right side offset forward.	$829
3310-0212	Crosslay triple extra deep. All to be 31" deep (to 3x3) with approx 28" high dividers (notched). Includes (2) 4.25" wide single stack crosslays to hold 200' of 1.75" DJ (each), (1) 5.5" wide single stack crosslays to hold 200' of 2.5" DJ. Includes storage pan to rear of crosslays if applicable.	$3,636
3310-0213	Pike pole/Ladder storage. Available on HP75/78 SideStacker with tall R1 & HM100/110 SideStacker only. The pike pole tubes to accomodate APH pike poles. The access door to match the rear body finish.	$570

3310-0214	Jack leg opening covers polished stainless steel (2) sets. Includes outrigger covers and fixed filler panels.	$1,623
3310-0215	Transverse compartment floor to be extended out to door opening in L1.	$372
3310-0216	Compartments officer side tandem axle HP eMAX SideStacker. Includes rescue style extended height compartments ahead of wheel well with extended hosebed.	$28,778
3310-0217	Storage box w/hinged cover. Box to be dia plt approx 15" wide x 96" long x 15" deep. Lid with 1.5" lip to be hinged on outboard side with (2) thumb latches, (3) EON LED lights mounted to lid to illuminate interior when open , gas spring hold-opens and chrome grab handle. Locate on top of body right side above R1/R2.	$1,282
3310-0218	Storage box w/hinged cover. Box to be dia plt approx 15" wide x 96" long x 15" deep. Lid with 1.5" lip to be hinged on outboard side with (2) thumb latches, (3) EON LED lights mounted to lid to illuminate interior when open , gas spring hold-opens and chrome grab handle. Locate on top of body left side above L1/L2.	$1,282
3310-0219	Storage box w/hinged cover. Box to be dia plt approx 16" wide x 43" long x 12" deep. Lid to be hinged on outboard side with gas shock hold-opens and chrome grab handle. Locate on top of body over R1 offset forward.	$849
3310-0220	Crosslay single (1) 10.5" wide double stack to hold up to 300-400' of 2.5" DJ. Includes storage pan to rear of crosslays.	$1,306
3310-0221	Compartments driver side tandem axle HP eMAX SideStacker, med cab, 240 WB. Includes rescue style extended height compartments.	$38,139
3310-0222	Rear turntable access door. Smooth plate lift up door to open 20 degrees past horizontal. Door will match rear body finish.	$815
3310-0223	Compartments driver side HP100 industrial platform SideStacker with short cab, 1000 gallon tank and 260" WB. Includes rescue style extended height compartments and raised rear perimeter aft of rear jack legs. The door on small compts next to rear outrigger to match wheelwell. Requires aerial envelope controls.	$39,040
3310-0224	Compartments officer side HP100 industrial platform SideStacker with short cab, 1000 gallon tank and 260" WB. Includes rescue style extended height compartments ahead of wheel well with extended hosebed, optional R3 compartment above forward tandem and raised rear perimeter aft of rear jack legs. Requires aerial envelope controls.	$28,927
3310-0225	Compartments officer side CR100/95 platform with 300g tank. Includes rescue style extended height compartments.	$38,047
3310-0226	Jack leg opening covers smooth plate painted job color (4) sets. Includes painted plate outrigger covers and fixed painted plate filler panels. HM100/110 requires surface mount warning lights.	$1,561
3310-0227	Exterior body stepping surfaces (running boards, floor of left rear staircase, staircase turntable access steps and rear area at top of access steps) to be 3/16" smooth plate with gator grip painted black durabak IPOS diamond plate.	$1,215
3310-0229	Compartments driver side HP100 Platform SideStacker 260" W/B with medium cab and 300g tank. Includes rescue style extended height compartments. The door on small compts next to rear outrigger to match wheelwell.	$37,094
3310-0231	Compartments officer side HP100 SideStacker 3" lowered body with 450g tank. Includes rescue style extended height compartments ahead of wheel well with extended hosebed.	$29,312
3310-0234	Compartments officer side HP100 industrial platform SideStacker for short cab, 750 gallon tank, 252" WB and 58-62K rear. Includes rescue style extended height compartments ahead of wheel well with extended hosebed and raised rear perimeter. Requires aerial envelope controls.	$27,458
3310-0235	Compartments driver side HP100 industrial platform SideStacker with short cab, 750 gallon tank, 252" WB and 58-62K rear. Includes rescue style extended height compartments and raised rear perimeter. The door on small compts next to rear outrigger to match wheelwell. Requires aerial envelope controls.	$38,047
3310-0236	Recessed tubes for (4) pike poles. Tubes to be for (2) 6' and (2) 12' poles.	$457
3310-0237	Body wheelwell compartments (2), one each side above rearward tandem wheel approx 24" W x 6" H x 26" D with drop down doors. Door material to match wheelwell finish.	$698
3310-0238	Wall at rearward most point between cord reel enclosure storage boxes to enclose open storage area beneath aerial. Shall be bolt-in 3/16 Dia Plt. with diamonds facing rear. May require notching for lift cylinder clearance if applicable.	$334
3310-0239	Compartments officer side HP100 Platform SideStacker for long cab, 300 gallon tank, 252" WB and 58-62K rear. Includes rescue style extended height compartments ahead of wheel well, compartment over forward tandem and extended hosebed. Requires aerial envelope controls.	$28,511
3310-0240	Compartments driver side HP100 Platform SideStacker for long cab, 300 gallon tank, 252" WB and 58-62K rear. Includes rescue style extended height compartments ahead of wheel well. The door on small compt next to rear outrigger to match wheelwell. Requires aerial envelope controls.	$38,024
3310-0241	Compartments officer side HP100 Platform SideStacker with 300g tank. Includes rescue style extended height compartments ahead of wheel well and rescue style compartments IPO hosebed. The door on small compts next to rear outrigger to match wheelwell.	$29,011

3310-0242	Compartments driver side HP100 Platform SideStacker with 300g tank (lowered 2"). Includes rescue style extended height compartments. The door on small compts next to rear outrigger to match wheelwell.	$39,040
3310-0243	Compartments officer side HP100 Platform SideStacker with 300g tank (lowered 2"). Includes rescue style extended height compartments ahead of wheel well and rescue style compartments IPO hosebed. The door on small compts next to rear outrigger to match wheelwell.	$39,040
3310-0244	Contoured beavertail compartments. Full height door for compartment openning. Includes special mount painted job color for upper rear warning light and rear facing scene (if applicable).	$3,316
3310-0246	Auxiliary jack pad 24X24 (4) with side mounted handle. Includes (2) double mounting brackets welded in place.	$2,070
3315-0002	Appleton SpaceSaver 2-bottle fill station. Fill station to be located in [#LOC].	$12,976
3315-0006	4-Bottle DOT 6000 PSI breathing air cascade system with air panel, bottle rack and all associated air lines, valves and gauges. Rack and bottles to be located [#LOC].	$15,768
3315-0030	System shall consist of a Space Saver 2 bottle fill station offset against rearward wall and control panel with provisions to have low pressure system which includes controls for E-One supplied air reel and air outlet port. Control panel shall be mounted in an E-One fabricated enclosure offset against forward wall located in L3. Haskel booster pump shall be provided in L3 mounted to fixed shelf just above breathing air system units. A (4) DOT bottle cascade system located in L1/R1 horizontally mounted to transverse floor offset as far forward as possible in an E-One supplied rack.	$34,111
3320-0001	SCBA large tube bottle rack. Location: [#LOC].	$89
3320-0002	SCBA Small Tube Bottle Rack. Location: [#LOC]	$74
3320-0005	SCBA Bottle Storage. (4) Cast Product SCBA bottle storage with gasketed doors. (2) each side in rear wheel well area.	$661
3320-0009	SCBA Bottle Storage. (8) Cast Product SCBA bottle storage with gasketed doors. (4) each side in rear wheel well area.	$1,321
3320-0010	SCBA Bottle Storage. (4) Cast Product SCBA bottle storage doors. (2) each side in rear wheel well area. Each tube to include a ribbed rubber insert mounted to rear of tube.	$594
3320-0018	SCBA Bottle Storage. (8) Fire Shopp SCBA bottle storage with hinged doors with push button latches. (4) officer side and (4) driver side in wheel well area.	$1,542
3320-0020	SCBA Bottle Storage. (4) Fire Shopp SCBA bottle storage with hinged doors with push button latches. (2) officer side and (2) driver side in wheel well area.	$1,123
3320-0023	SCBA Storage. (6) Cast Product SCBA bottle storage with gasketed doors. (3) each side rear wheel well area located in center and rearward positions.	$991
3320-0025	SCBA Storage. (6) Cast Product SCBA bottle storage with gasketed doors. (4) Driver side rear wheel well area and (2) officer side (located either side of the rearward tandem wheel).	$991
3320-0031	Zico bottle rack for large bottles. Locate in [#LOC]. Each unit will have straps to hold the bottle in and all top units will have a flat top. Each unit will be bolted together and be [#COL] PVC coated.	$122
3320-0033	SCBA/Wheel Chock Storage. (4) Cast Product SCBA bottle storage with gasketed doors, two (2) each side centered between tandems. Four (4) wheel chock storage compartments with hinged doors (doors to match wheel well material) and push button latches located two (2) each side (1) forward and (1) rearward in each rear wheel well area for (1) SAC-44-E wheel chock to be stored per compartment. Does not include wheel chocks.	$2,619
3320-0040	SCBA bottle storage. (4) Fire Shopp style SCBA bottle storage with hinged brushed stainless steel doors with push-button latches. (2) officer side and (2) driver side in the rear wheel well area.	$1,123
3320-0042	SCBA Bottle Storage. (8) Cast Product SCBA bottle storage with gasketed doors with locking latches. (4) each side in rear wheel well area.	$1,533
3320-0046	SCBA Bottle Storage. (12) E-ONE SCBA bottle storage with hinged doors (doors to match wheel well material) with push button latches and one aluminum tray for each bottle. Each side of body to have (3) Double SCBA bottle storage compartments, (1) forward, (1) rearward and (1) between tandem offset to rear in wheel well area.	$1,492
3320-0053	SCBA Bottle Storage. (4) E-ONE SCBA bottle storage with hinged doors (doors to match wheel well material) with push button latches. (2) officer side and (2) driver side in wheel well area.	$632
3320-0054	SCBA Bottle Storage. (4) Fire Shopp SCBA double bottle storage with hinged doors and push button latches. (2) SCBA bottles forward and (2) SCBA bottles rearward each side in wheel well area.	$1,542
3320-0055	SCBA Storage. (6) Fire Shopp SCBA bottle storage with hinged doors with push button latches. (4) Driver side rear wheel well area and (2) officer side (located either side of the rearward tandem wheel).	$1,682
3320-0061	SCBA Bottle Storage. (4) Cast Product SCBA bottle storage doors. (2) each side in rear wheel well area.	$594
3320-0064	SCBA/Fire Extinguisher Storage. Eight (8) storage compartments with hinged doors (doors to match wheel well material) and push button latches. Four each side in rear wheel well area.	$2,619
3320-0069	PAC Cylinder Mate. Locate in [#LOC]. Each unit will be black in color and have a strap to hold the bottle in.	$211

3320-0072	SCBA Bottle Storage. (8) Cast Product gasketed doors with (7) SCBA bottle storage tubes. (4) Cast Product SCBA bottle storage with gasketed doors on officer's side and (3) Cast Product SCBA bottle storage tubes with (4) gasketed doors on driver's side. Recessed fuel fill to be protected behind the rear driver side SCBA door.	$1,321
3320-0073	SCBA bottle storage/Recessed fuel fill. (7) Fire Shopp style SCBA bottle storage with hinged polished stainless steel doors with push-button latches. (4) officer side, (3) driver side and (1) recessed fuel fill with cast stainless housing and hinged SCBA style polished stainless steel door offset rearward in wheel well area. Note all doors to match.	$3,753
3320-0074	SCBA Bottle Storage. (16) E-ONE SCBA bottle storage with hinged doors (doors to match wheel well material) with push button latches and one aluminum tray for each bottle. (8) officer side and (8) driver side in wheel well area.	$1,987
3320-0077	SCBA/Wheel Chock Storage. (6) Cast Product SCBA bottle storage with gasketed doors, (2) two driver side centered between tandem and (4) four officer side. Two (2) wheel chock storage compartments with hinged doors (doors to match wheel well material) and push button latches located (2) two driver side (1) forward and (1) rearward in rear wheel well area for (1) one SAC-44-E wheel chock to be stored in each compartment. Does not include wheel chocks.	$2,619
3320-0081	Vision Mark tags (2) for driver side wheel well area SCBA bottle storage. Tags to have red letters on white background. (1) Tag forward inboard tube to read "WATER EXTINGUISHER". (1) Tag rearward inboard tube to read "DRY CHEM".	$93
3320-0083	SCBA Bottle Storage. (4) Fire Shopp SCBA double bottle storage for (8) bottles and (4) Fire Shopp SCBA single bottle storage for (4) bottles with hinged doors and push button latches (wired to door ajar). Double storage tubes located over forward tandem wheel and single storage tubes over rearward tandem wheel each side in rear wheel well area for a total of (12) SCBA bottles.	$2,664
3325-0001	E-ONE designed PTO driven HRT system, 10,500 PSI system, with 4 tool capability.	$43,251
3325-0003	E-ONE designed PTO driven HRT system, 10,500 PSI system, with 2 tool capability.	$28,939
3325-0004	XRT Hydraulic tool system with 2 tool capability. 10,500 PSI system. Includes selector vlv for each reel, hyd res / filter and remote cooler. Requires gen with XRT hyd pump.	$23,302
3325-0008	TNT PTO-TWIN Hydraulic tool system with 2 tool capability. 10,500 PSI system. Requires Harrison gen with IHT configuration. Pump location: [#LOC]	$11,121
3325-0009	XRT Hydraulic tool system with 3 tool capability. 5,000 PSI system. Includes selector vlv for each reel, hyd res / filter and remote cooler. Requires gen with XRT hyd pump.	$26,157
3325-0010	XRT Hydraulic tool system with 2 tool capability. 5,000 PSI system. Includes selector vlv for each reel, hyd res / filter and remote cooler. Requires gen with XRT hyd pump.	$23,302
3325-0011	Additional hydraulic reel valves. (2) Dump and (2) splitter valves shall be provided. The (2) dump valves are required when providing functionality for (2) additional reels. The (2) splitter valves are required to allow (2) tools to operate at each of (2) reels.	$12,600
3330-0001	Slide-out platform, integral driver side running board (includes hand rail as applicable).	$1,247
3330-0002	Slide-out platform, rollerless. Includes chrome grab handle centered on the front face of the platform (includes hand rail as applicable). Located [#LOC].	$1,207
3330-0003	Rear slideout platform - rollerless HP75 / HP78 SideStacker 36" wide located below hosebed. Includes a chrome grab handle centered on the frt face of the platform and a handrail below hosebed.	$904
3330-0004	Slideout platform-recessed rear. Located below hosebed. Includes a handrail below hosebed. Requires extended hosebed on HP100, CR100, and 92 Pltfrm SideStacker bodies.	$816
3330-0007	Folding Step. Location [#LOC]. Each location requires a minimum of (1) handrail per NFPA.	$115
3330-0008	Handrail 12". Location [#LOC].	$102
3330-0023	Slideout platform-integral officer side running board. Not available with a front suction (includes handrail as applicable).	$1,247
3330-0029	Intermediate pump panel step officer side with forward tapered corner. Includes (1) lower and (1) upper folding step with (1) handrail and (1) recessed step light located above the intermediate step. Step light to be switched thru work light in cab.	$844
3330-0030	Intermediate pump panel step officer side with forward tapered corner. Includes (2) lower and (1) upper folding step with (1) handrail and (1) recessed step light located above the intermediate step. Step light to be switched thru work light in cab.	$954
3330-0042	Hansen white LED body hand rails upgrade package.	$1,210
3330-0059	Zico swing-out access ladder with 4 rungs on main ladder and 2 rungs on swing down ladder. Locate on right side of pump module offset to rear.	$1,735
3330-0072	Hansen red LED body handrails upgrade package.	$1,210
3330-0075	Slideout platform - SlideMaster. Location: [#LOC].	$1,593
3330-0079	Slide-out platform, rollerless. Includes chrome grab handle centered on the front face of the platform (includes hand rail as applicable for body mounted locations) and required step lighting. Located [#LOC].	$813
3330-0094	A pair of 12" handrails shall be supplied. Locate 1 each side outboard of ladder on roof.	$204
3330-0100	Step below body. Located below [#LOC]. Each location requires a minimum of (1) handrail / handhold per NFPA.	$310

3330-0105	Dual lighted LED folding step. Location: [#LOC]. Each location requires a minimum of (1) handrail per NFPA.	$110
3330-0114	Intermediate pump panel step officer side with forward tapered corner. Includes (1) lower and (1) upper dual LED lighted CPI folding step and a minimum of (1) handrail as req to meet NFPA. Step lights to be switched thru work light in cab.	$839
3330-0115	Intermediate pump panel step officer side with forward tapered corner. Includes (2) lower and (1) upper dual LED lighted CPI folding step and a minimum of (1) handrail as req to meet NFPA. Step lights to be switched thru work light in cab.	$948
3330-0125	Slideout platform-integral driver side running board (includes handrail as applicable). The platform step to be smooth plate with gator grip painted black durabak.	$1,499
3330-0128	Diamond plate step (approx. 12"w) with Gator Grip at center rear of body even with top of body to provide additional top deck area. Step to have tappered ends left and right and 1" lip extending up. Available on SideStacker style bodies only.	$678
3330-0130	Diamond plate gator grip overlay to be located on driver and officer compartment tops forward body and compartment tops ahead of turntable.	$657
3330-0139	Step below side intake / discharge panel (PR). Embossed dia plt with steel supports. Each location requires a minimum of (1) handrail / handhold per NFPA. eMAX only.	$1,212
3330-0150	Intermediate pump panel step officer side without taper. Includes (1) lower and (1) upper dual LED lighted CPI folding step and a minimum of (1) handrail as req to meet NFPA. Step lights to be switched thru work light in cab.	$839
3330-0153	Tailboard 12" bolt-on w/Bustin insert. Stainless steel body. Includes hand rail below hose bed and (1) underbody ground light on the officer's side.	$740
3330-0154	Full width brushed stainless steel rubrail for the back of aerial body.	$219
3330-0158	Step below side intake / discharge panel (PR). Gator grip diamond plate. Each location requires a minimum of (1) handrail / handhold per NFPA. eMAX only.	$927
3330-0163	Slide-out platform, integral below driver side running board (includes hand rail as applicable) with Bustin Tread insert. SS product only.	$1,247
3330-0164	Slide-out platform, recessed rear. Located below hose bed. Includes a hand rail near hose bed. Requires extended hose bed on HP100, CR100, and 92 Pltfrm SideStacker bodies. SS product.	$816
3330-0165	Handrail 24". Location [#LOC].	$184
3330-0166	Handrail 12". Locations to be determined at pre-construction meeting.	$102
3330-0170	Slideout platform-roller-less. Includes chrome grab handle and retaining pin, centered on the front face of the platform (includes handrail as applicable for body mounted locations) and required step lighting. Located: [#LOC].	$813
3330-0174	Slideout platform-rollerless. Includes chrome grab handle centered on the front face of the platform (includes hand rail as applicable). The platform step to be smooth plate with gator grip painted black durabak. Located [#LOC].	$1,448
3330-0185	Step below side intake / discharge panel (PR). Gator grip plate constructed of 1/8" (.125") aluminum smooth plate with black Scorpion coating (rough finish) IPOS diamond plate. Each location requires a minimum of (1) handrail / handhold per NFPA. eMAX only.	$1,177
3340-0003	Cast Products recessed fuel fill with door.	$117
3340-0015	Diamond plate single axle wheel well. Includes bolt-on composite wheel well liners and aluminum trim fenderettes.	$1,022
3340-0027	Diamond plate corner guards for the driver and officer front compartment face. Guards to wrap around the corner and be full height of side assembly or to a max of 96".	$190
3340-0034	The hinged door(s) of [#LOC] to have door louvers for additional ventalation.	$146
3340-0035	Divider Long. To run full length of hose bed (front to rear).	$451
3340-0036	Body compartment interiors to have a swirled finish. Includes pan of hinged door as applicable.	$1,924
3340-0041	Removable number plate with mounting brackets. Locate [#LOC]. Plate to be painted job color. Lettering and/or graphics not included.	$248
3340-0051	Reinforce flooring of compartment [#LOC] for storage of heavy equipment.	$295
3340-0052	Stainless steel trim on bottom edge of compartment opening of [#LOC].	$112
3340-0055	Cast Products recessed fuel fills with doors for dual fuel fill application.	$404
3340-0059	Recessed Fuel fills for dual fuel fill application. (1) each side in wheel well.	$229
3340-0061	The walls of compartment [#LOC] to have additional louvers for additional ventilation.	$74
3340-0067	Turtle Tile Brand [#COL] Floor Matting covering all applicable Compartment Floors, Shelves, and Rollout Trays.	$977
3340-0077	Body compartment Interiors to have Zolatone gray finish. To include pan of hinged doors (as applicable). Does not include floors if they are dia plt.	$4,816
3340-0078	Body compartment Interiors and compartment mounted components (shelves, trays, toolboards,etc.) to have Zolatone gray finish. To include pan of hinged doors, and tool compartments (as applicable). Does not include floors if they are dia plt.	$10,218
3340-0088	Smooth plate single axle wheel well painted job color. Includes bolt-on composite wheel well liners.	$1,482
3340-0089	Turtle Tile Brand [#COL] Floor Matting covering all applicable Compartment Floors, Shelves, and Rollout Trays.	$1,576

3340-0090	Turtle Tile Brand [#COL] Floor Matting covering all applicable Compartment Floors, Shelves, and Rollout Trays.	$2,146
3340-0093	Mud flaps, rear, black with E-ONE logo.	$148
3340-0102	Angled (Boston style) style tailboard corners.	$406
3340-0107	Diamond plate tandem axle wheel well. Includes bolt-on composite wheel well liners and fenderettes.	$2,041
3340-0108	Smooth plate tandem axle wheel well painted job color. Includes bolt-on composite wheel well liners.	$2,961
3340-0109	Power vent system located in [#LOC]. Includes timer and is run from shorepower inlet.	$177
3340-0111	Horizontal ladder bracket. Location and type of ladder: [#LOC].	$235
3340-0125	Recess mounting for directional light bar. Located on rear area of body.	$364
3340-0132	Diamond plate single axle wheel well. Includes fenderettes and bolt-on aluminum wheel well liners painted job color.	$2,041
3340-0141	Label package for Memphis units only, to include labeling of removable panels to indicate what is behind.	$89
3340-0147	Louver Guards. All lower body compartment louvers to have protective guard provided on exterior of compartments. Guards to prevent road spray from entering compartments.	$489
3340-0150	Dri-Dek brand [#COL] floor matting covering all applicable compartment floors, shelves, and rollout trays.	$911
3340-0151	Dri-Dek Brand [#COL] floor matting covering all applicable body compartment floors, shelves, and rollout trays.	$1,510
3340-0152	Dri-Dek brand [#COL] floor matting covering all applicable compartment floors, shelves, and rollout trays.	$2,081
3340-0154	Mud flaps, rear, black with no logo.	$148
3340-0158	Underbody splash guard behind rear axle mounted to body.	$482
3340-0166	Bolt-in partition wall. Locate in [#LOC].	$199
3340-0174	Stokes basket storage compartment. Locate in [#LOC] with a strap(s) to hold basket in rack.	$668
3340-0176	Swirl plate single axle wheel well with clear coat finish. Includes bolt-on composite wheel well liners.	$1,572
3340-0187	Sign "Stay Back 150 Metres" with black reflective lettering. Locate below rear of body.	$121
3340-0200	Removable slat flooring. Location: [#LOC]	$246
3340-0203	Bracket Hooligan tool mount [#LOC]	$146
3340-0207	Piping cover to be located in compartment [#LOC]. Includes compartment wall cut-outs for piping.	$414
3340-0215	Divider Long. To run full length of hosebed (front to rear). Divider height to half of hosbed depth (top to bottom). For use with low hosebed configurations only.	$451
3340-0218	Sign "Stay Back 500FT". White plate with red reflective lettering. Locate low on rear of body / body doors.	$121
3340-0220	Body compartment Interiors to have Zolatone black finish. To include pan of hinged doors (as applicable). Does not include floors if they are dia plt.	$4,816
3340-0249	Stokes basket storage on forward top of body officer side.	$459
3340-0258	A deflector shield will be placed in front of the light tower or A/C system. Deflector will be in front of the forward most component.	$852
3340-0264	License plate sized number plate. Locate in license plate bracket(s). Plate to be painted job color. Lettering and/or graphics not included.	$193
3340-0267	Stokes/backboard storage rack. Stokes rack for 8"W x 24"H x 84"L basket with backboard sleeves for (2) backboards 2.5"W x 18"H x 84"L forward of rack. Includes restraining strap for stokes and backboards on each side. Location: L1/R1 transverse rear wall.	$867
3340-0269	Diamond plate tandem axle wheel well. Includes bolt-on alum wheel well liners (un-painted) and fenderettes.	$2,524
3340-0272	Sign "Stay Back 500FT" with black reflective lettering. Locate B1 door above D-ring.	$121
3340-0278	Diamond plate tandem axle wheel well. Includes bolt-on painted job color alum wheel well liners and fenderettes.	$2,943
3340-0281	Backboard storage compartment for (2) boards. [#LOC]. Includes retaining strap for boards.	$621
3340-0283	Horizontal ladder bracket. Location and type of ladder: [#LOC].	$235
3340-0289	Stokes basket storage on forward top of body driver side for storage of a CMC Rescue-CMC Pro Series Model #726112-T1 stokes basket.	$459
3340-0309	Sign "Keep Back 300FT". White plate with red reflective lettering. Locate on rear ladder access door.	$121
3340-0337	Hosebed divider with 45 degree offset to store customer required hose load. Rear section of divider approx. 94.5" to rear of offset and forward section of divider approx. 102.5" ahead of offset. HP75/78 only.	$665
3340-0358	Backboard storage sleeve for (1) board. 4"H x 20"W x 76"L. Includes (2) retaining straps, (1) each side for boards. Location: Horizontally mounted through L3/B1/R3.	$621
3340-0374	Sign "Stay Back 300FT" with black reflective lettering. Locate below rear of body.	$121
3340-0376	Diamond plate single axle wheel well. Includes fenderettes and bolt-on aluminum wheel well liners sanded finish.	$1,847

3340-0388	Brushed stainless steel rubrails for the sides of the body below the lower side compartments.	$687
3340-0392	Underbody full width mudflap behind rear axle (as applicable) mounted to body.	$568
3340-0396	A deflector shield will be placed in front of the light tower or A/C system. Deflector will be in front of the forward most component. Deflector will be painted [#COL].	$1,061
3340-0400	Backboard storage compartment for (2) boards in transverse. Location: [#LOC]. Includes retaining straps on both sides for boards.	$621
3340-0405	Sign, "STAY BACK 500 FEET" with black reflective lettering. Locate below rear of body.	$121
3340-0406	Sign "Stay Back 150 Metres" with black reflective lettering. Locate below rear of body.	$121
3340-0413	Wheel Chocks 44" NFPA Complaint - Pair of Zico SAC-44. Up to 44" diameter Tires. Includes mounting bracket. Locate [#LOC].	$591
3340-0464	Rubrail spaced .50" away from body IPOS.	$205
3340-0471	Hosebed partition. Locate at rear of hosebed, approx 9.25" from left side wall, extend 86" forward and taper at 45 degrees to left hosebed side wall. Partition to be .25" al plt with sanded finish.	$593
3340-0474	Body, Cab and Aerial Tags in French to replace standard English E-One supplied Tags. Includes pump panel and multiplex display if applicable.	$1,388
3340-0476	Stainless steel tandem axle rear fender panels painted job color. Includes bolt-on stainless steel wheel well liners (not painted) and polished stainless steel outer fenderettes.	$1,946
3340-0478	Insulation to protect compartment from exhaust system heat. Locate below center transverse floor, right side transverse floor and lower R1 back wall.	$837
3340-0487	Backboard storage sleeve. Locate in ladder tunnel between PEL-24 and PRL-14. Sleeve to be approx 4"W x 19.625"H x 74"L.	$378
3340-0488	Divider long for use with hosebed preconnect. Divider to be set back and/or notched at forward area of hosebed for access to preconnect line connection.	$451
3340-0490	Sign "Stay Back 15 Meters" with black reflective lettering. Locate below rear of body.	$121
3340-0493	Sign "Keep Back 150M". White plate with red reflective lettering. Locate on rear ladder access doors.	$121
3340-0495	Fabricate and install a storz hose holder including Zico coupling mount (CM 3.0/4.0) for 4" hose at rear of body on officers side below pike pole storage. Fabricated from .125" alumimum diamond plate.	$502
3340-0496	Louver Guards. All body compartment louvers to have protective guard provided on exterior of compartments. Guards to prevent road spray from entering compartments.	$489
3340-0497	Storage bin with (4) cells each approx. 9"w x 9"h, for square configuration. Located in L3 floor mounted offset rearward.	$390
3340-0498	Storage bin approx. 24"w x 8"h. Located in R3 suspended from ceiling offset rearward.	$292
3340-0499	Storage area to officer side of center hosebed divider. Area to include (from driver to officer side): (1) 10" H x 10" W. This includes (1) divider with square ends and hosebed style top. Remaining are to be for horizontally stored backboards (2). Area to be 6" H x remaining hosbed width with a hosebed style top (full length of hosebed).Each storage area to have a drop down diamond plate door with push button latching and each wired to door ajar indicator in cab.	$584
3340-0521	All body and pump module compartments (if applicable) and/or storage areas to have no louvers or vents.	$244
3340-0522	Vehicle number sign plate (painted job color) bolted on top of compartment top over R1.	$125
3340-0530	Removable number plate with mounting brackets. Locate [#LOC]. Plate to be painted job color. Plate to be 12"W x 8"H. Lettering and/or graphics not included.	$235
3340-0590	Storage sleeve compartment in transverse. Location: L1/R1 just below rollup door drum centered on upper rear wall. Approximately 6"wide x 12"high x 72"long. Includes retaining straps on both sides.	$420
3340-0601	Backboard storage compartment for (2) boards in transverse. Location: [#LOC]. Includes retaining straps on both sides for boards.	$621
3340-0606	Diamond plate partition on inboard side of hydraulic generator in open storage area.	$319
3340-0614	[#COL] edge trim for floor mounted Turtle Tile matting. Locate on door opening side only. Requires seperate floor matting option.	$343
3340-0628	Entire top of body's diamond plate panels to be sand blasted to remove shine.	$626
3340-0636	Fill Tower support bracket to be held 1/4" back from fill tower and attached to front hosebed wall.	$107
3340-0637	Cover plates around rear frame mounted tow eyes in B1 compartment.	$107
3340-0640	Bolt-in partition walls located as follows in hose bed, (1) one partition side to side to rear of fill towers and (2) partitions located one each side to inside of each tower for additional storage space between fill towers.	$632
3340-0643	Stainless steel trim for lower edge of rear mudflap (PR). The trim shall be 2" in height and go full width of the mudflap. The material shall be "polished" stainless steel and it will be mounted to the lower edge of the rear (back side) of the mudflaps.	$286
3340-0652	Stainless steel trim for lower edge of front mudflap (PR). The trim shall be 2" in height and go full width of the mudflap. The material shall be "polished" stainless steel and it will be mounted to the lower edge of the rear (back side) of the mudflaps.	$286
3340-0653	Diamond plate tandem axle wheel well. Includes bolt-on composite wheel well liners and bolt-on polished alum fenderettes.	$1,853

3340-0657	Trim between the body front and the cab. One (1) each side to close out the majority of the gap between the body and cab, The trim pieces shall be smooth aluminum plate painted job color and will be bolted in place to the body.	$383
3340-0660	Insulation to protect compartment from exhaust system heat. Locate in R2 lower back wall.	$837
3340-0661	Vehicle number sign plate (un-painted smooth plate) bolted on top of storage box over R1. Approx. size 16" x 24".	$117
3340-0662	Recessed fuel fill with flat latching stainless steel door. Door style to match SCBA doors.	$249
3340-0676	Hosebed divider with 45 degree offset to store customer required hose load. Locate on driver side of hosebed, to store 400' of 2.5" DJ hose.	$759
3340-0677	Stokes basket storage on forward top of body [#LOC].	$459
3340-0688	The driver & officer side upper body to be flush painted smooth plate body panels. Includes rear facing to rear of extended high side body panels and side facing over L3 & R3 body panels. These areas are to be painted job color.	$804
3340-0689	Insulation to protect compartment from exhaust system heat. Locate behind R1 forward wall.	$489
3340-0691	Drop down fuel fill door and panel below on side of body to rear of driver and officer side tandem wheel well to be smooth plate painted job color.	$306
3340-0697	Power vent system located in [#LOC]. Wired through receptacle in compartment.	$177
3340-0698	Body compartment floors to be 3/16" aluminum smooth plate.	$614
3340-0711	Hosebed divider with 45 degree offset to store customer required hose load. Rear section of divider approx. 82" to rear of offset and forward section of divider approx. 46" ahead of offset. HP75/78 only.	$665
3340-0713	Diamond plate deflector shield for Light Tower. Deflector to be mounted on driver side compartment top at front of body. See photos on file.	$365
3340-0714	Bolt-in floor [#LOC]. Floor is in addition to the existing DP floor. Floor to have 2" raised forward area (tapered towards rear for securing cribbing) and run full length front to rear.	$202
3340-0730	Smooth plate corner guards for the driver and officer front and rear compartment faces. Guards to wrap around the corner and be full height of side assembly or to a max of 96". Corner guards to be painted black durabak.	$821
3340-0731	Access panels thru B1 interior officer side and into rear of R4. Service access rear of fill station controls. Access panel to be sized as large as possible to accommodate sevice operations.	$420
3340-0735	The [#LOC] compartment to have .187" smooth plate floor IPO diamond plate.	$161
3340-0740	Divider shroud for cab tilt pump, bolt in R1.	$166
3340-0747	Compartment heater as high as possible on forward wall. Includes switch on driver overhead. Location: [#LOC].	$1,096
3340-0751	One (1) vertical air bag module to contain four (4) customer supplied air bags (2) 21" x 21" and (2) 22.5" x 16". Module to be .125" aluminum sheet with four (4) slots and installed in L2 offset forward. Half circle cut outs shall be provided on the outer edge to assist in grabbing the bags. Layout shall be (2) slots approximately 2" W x 12" H x 23" D, (2) slots 2" W x 22" H x 22" D configuration. One (1) strap will be installed horizontally across the openings to keep items securely stowed.	$635
3350-0000	Hydraulic hose reel for use with Hurst brand tools. Includes 100' 1/4" hose (up to 5,000 PSI) and rollers (captive type). Location: [#LOC]. Hose Color: [#COL].	$2,223
3350-0001	Air Reel w/electric rewind. 12V with 100' .25" hose plumbed to the truck air system (unless otherwise specified). Location: [#LOC].	$2,444
3350-0004	Low Pressure Utility Air Hose Reel assembly with 250' low pressure air hose and mini panel. Locate in [#LOC].	$2,345
3350-0009	Hydraulic hose reel for use with TNT brand tools. Includes 100' 1/4" hose (up to 10,500 PSI) and rollers (captive type). Location: [#LOC]. Hose Color [#COL].	$4,467
3350-0010	Hydraulic hose reel for use with Phoenix brand tools. Includes 100' 1/4" hose (up to 5,000 PSI) and rollers (captive type). Location: [#LOC]. Hose Color [#COL].	$2,223
3350-0011	Hydraulic hose reel for use with Code 3 brand tools. Includes 100' 1/4" hose (up to 5,000 PSI) and rollers (captive type). Location: [#LOC]. Hose Color [#COL].	$2,223
3350-0012	Hydraulic hose reel for use with Amkus brand tools. Includes 100' 1/4" hose (up to 10,500 PSI) and rollers (captive type). Location: [#LOC]. Hose Color: [#COL].	$4,467
3350-0013	Hydraulic hose reel for use with Hurst Centaur brand tools. Includes 100' 1/4" hose (up to 10,000 PSI) and rollers (captive type). Location: [#LOC]. Hose Color [#COL].	$4,467
3350-0014	Hydraulic hose reel for use with Genesis brand tools. Includes 100' 1/4" hose (up to 10,000 PSI) and rollers (captive type). Location: [#LOC]. Hose Color [#COL].	$4,467
3350-0015	Hydraulic hose reel for use with Holmatro brand tools. Includes 100' 1/4" hose (up to 10,000 PSI) and rollers (captive type). Location: [#LOC]. Hose Color [#COL].	$4,467
3350-0016	12' Lead/Supply Line for high pressure hydraulic reel. To be used with 10,000 PSI hyd reels. Locate on reel in [#LOC].	$760
3350-0017	30' Lead/Supply Line for high pressure hydraulic reel. To be used with 10,500 PSI hyd reels. Locate [#LOC].	$1,130
3350-0018	12' Lead/Supply Line for low pressure hydraulic reel. To be used with 5,000 PSI hyd reels. Locate [#LOC].	$609

3350-0019	30' Lead/Supply Line for low pressure hydraulic reel. To be used with 5,000 PSI hyd reels. Locate [#LOC].	$956
3350-0025	Hydraulic hose reel for use with TNT brand tools. Includes 100' 1/4" synthetic rubber hose (up to 10,500 PSI) and rollers (captive type). Location: [#LOC]. Hose Color [#COL].	$4,467
3350-0026	Hydraulic hose reel for use with Amkus brand tools. Includes 100' 1/4" rubber hose (up to 10,500 PSI) and rollers (captive type). Location: [#LOC]. Hose Color: [#COL].	$4,467
3350-0029	Route hydraulic lead line(s) to [#LOC].	$89
3350-0030	Low pressure utility air hose reel w/spring rewind. Includes 50' 3/8" low pressure air hose, rollers, ball stop and and shut-off valve accessible from ground. Loc: [#LOC].	$1,230
3350-0032	Akron utility air hose reel. Includes 200' 3/8" hose and reel mounted rollers (captive type). Loc: [#LOC].	$1,307
3350-0033	Akron hydraulic hose reel for use with Hurst brand tools. Includes 100' 1/4" hose (up to 5,000 PSI) and rollers (captive type). Location: [#LOC]. Hose Color: [#COL].	$2,066
3350-0034	Hydraulic hose reel for use with Holmatro Core Technology tools. Reel model EF2220-17-18 w/ 100' of CORE hydraulic hose and a 30' CORE Holmatro pigtail. Location: [#LOC]. Hose Color [#COL].	$7,076
3350-0036	Hydraulic hose reel for use with Hurst Centaur brand tools. Includes 150' 1/4" hose (up to 10,000 PSI) and rollers (captive type). Location [#LOC]. Hose Color [#COL].	$5,440
3350-0040	12' Lead/Supply Line for high pressure hydraulic reel. To be used with 10,500 PSI hyd reels. Locate on reel in [#LOC].	$798
3350-0041	30' Lead/Supply Line for high pressure hydraulic reel. To be used with 10,500 PSI hyd reels. Locate [#LOC].	$1,186
3350-0043	Akron hydraulic hose reel for use with Amkus brand tools. Includes 100' 1/4" hose (up to 10,500 PSI) and rollers (captive type). Location: [#LOC]. Hose Color: [#COL].	$3,189
3350-0045	Akron reel to be powder painted custom color. Requires approval from vendor on color. Location: [#LOC]. Reel Color: [#COL].	$112
3350-0046	8' Lead/Supply Line for high pressure hydraulic reel. To be used with hyrdraulic reels between 10,000 to 10,500 PSI. Locate: [#LOC].	$369
3350-0048	Low Pressure Utility Air Hose Reel assembly with 250' low pressure air hose. Locate in [#LOC].	$1,761
3350-0052	6' Lead/Supply Line for high pressure hydraulic reel. To be used with 10,000 PSI hyd reels. Locate on reel in [#LOC].	$730
3350-0059	6' Lead/Supply Line for Holmatro Core hydraulic reel. To be used with Holmatro Core hyd reels. Locate on reel in [#LOC].	$935
3350-0060	Hydraulic hose reel for use with Holmatro Core Technology tools. Reel model EF2220-17-18 w/ 100' of CORE hydraulic hose. Location: [#LOC]. Hose Color [#COL].	$5,350
3350-0062	Hydraulic hose reel for use with Hurst brand tools. Includes rollers (captive type). Does not include hydraulic hose. Location: [#LOC].	$1,706
3350-0066	16' Lead/Supply Line for low pressure hydraulic reel. To be used with 5,000 PSI hyd reels. Locate [#LOC].	$645
3350-0068	A lead line #8, 5,000 psi hydraulic hose line routed from IHT manifold to B2 lower rear wall.	$434
3350-0083	Hydraulic hose reel for use with Amkus brand tools. Includes rollers (captive type). Does not include hydraulic hose. Location: [#LOC].	$1,974
3350-0084	16' Lead/Supply Line for high pressure hydraulic reel. To be used with 10,500 PSI hyd reels, lines are red and black in color. Compatible with Amkus tool brand. Locate on reel in [#LOC].	$935
3350-0085	16' Lead/Supply Line for high pressure hydraulic reel. To be used with 10,500 PSI hyd reels, lines are yellow and black in color. Compatible with Amkus tool brand. Locate on reel in [#LOC].	$935
3350-0091	15' Lead/Supply Line for high pressure hydraulic reel. To be used with 10,500 PSI hyd reels. Locate on reel in [#LOC].	$872
3365-0011	Floor mounted roll-out tray. Includes 250lbs. tray capacity. Mount on [#LOC] floor.	$601
3365-0013	Center mounted ladder tunnel. Ladder rack to hold: [#LOC].	$4,717
3365-0014	Dual ladder tunnel for HP75 / HP78 SideStacker. Ladder rack to hold: [#LOC].	$4,717
3365-0015	Dual ladder tunnel for HP75 / HP78. Ladder rack to hold: [#LOC]	$4,717
3365-0016	Box type enclosure for forward end of ladder tunnel. Required on center HB HP75 / HP78 with ladder tunnel doors.	$400
3365-0028	Hard Suction Storage Rack. Driver side compartment top. Includes spring hold downs and scuff plates behind spring mounts (as applicable).	$340
3365-0035	Hard Suction Storage Rack. Officer side compartment top. Includes spring hold downs and scuff plates behind spring mounts (as applicable).	$340
3365-0036	Center mounted ladder tunnel. Ladder rack to hold: [#LOC]	$4,717
3365-0037	Center mounted ladder tunnel. Ladder rack to hold: [#LOC].	$4,717
3365-0076	Center mounted ladder tunnel. Ladder rack to hold: [#LOC].	$4,717
3365-0084	Vertical ladder brackets (3) with adjustable tracks. Locate on officer's side of body to hold PEL-28, PRL-14, and CJL-14 ladders.	$919
3365-0117	Storage rack (4) 8" x 64" aluminum tubes. Locate ceiling mtd in L1/R1 transverse compartment centered side to side offset to front.	$1,017

3365-0119	Horizontal ladder brackets right side of body in recessed storage area above half side compartments. Brackets to hold from top to bottom: [#LOC].	$1,933
3365-0144	Horizontal ladder brackets left side of body in recessed storage area above half side compartments. Brackets to hold from top to bottom: [#LOC].	$1,933
3365-0145	Nylon scuff pads for vert uprights of rear ladder rack. Approx 1/16 thick self-stick material located on each side of extension ladders.	$100
3365-0146	Pike pole storage tube aluminum 16' with capped end. Locate in ladder tunnel.	$201
3365-0147	Backboard and Little Giant storage rack. Backboard sleeve approx 4"H x 20"W x 70"L with open ends located in trans compt over pump ceiling mtd offset to frt. Little Giant sleeve for a Model 17 approx 7"H x 25.5" W x 56" L open on left side only and located below backboard sleeve.	$1,019
3365-0167	Dual ladder tunnel for HP75 / HP78 SideStacker with tall R1 compartment. Ladder rack to hold: [#LOC].	$4,717
3365-0215	Double Hard Suction Storage Rack to store 6"x 6' hard suction hoses. (1) set Driver side compartment top offset forward and (1) set matching on Officer side atop diamond plate hosebed cover. Includes spring hold downs with scuff plates (as applicable).	$603
3365-0248	(2) Pike pole storage tubes to store (2) Fire Hooks Unlimited 16' Boston Rake Hooks. Locate in ladder tunnel recessed forward to allow ladder tunnel door to close.	$400
3365-0282	Hard suction storage box. Located in the officer side hose bed. Includes drop down door with finish to match rear of body, latch(s) shall be provided to secure the door in the closed position ((wired to door ajar), hose bed style top, nylatron flooring and hosebed divider extending to top of hose bed for inboard side. Box to hold (1)6" x 10' hard suction hose w/rocker lugs. Approximate size of opening 9.5"w x 8"h.	$1,164
3365-0296	Rubber flaps to enclose ladder tunnel between body sections at boom support (sides, top and bottom). HP95 Mid-mount only.	$412
3365-0319	Hard Suction Storage Rack. Driver side compartment top. Includes spring hold downs and scuff plates behind spring mounts (as applicable).	$340
3365-0321	Horizontal ladder bracket, Includes .187" smooth aluminum boot painted black durabak with ladder hold down. Location and type of ladder: [#LOC].	$282
3365-0334	Ladder Storage Box. Located in the officer side hosebed. The top shall be enclosed using the hosebed cover, the rear access shall be included in the vinyl rear flap as part of the hose bed cover (hinged door not included), The hosebed cover and rear flap shall be sold separately. Box to hold (1) Alcolite PEL 24' 3-section, (1) Alcolite PRL 12' roof, (1) Alcolite FL 10' attic ladder, (2) backboards and (2) pike poles.	$2,498
3365-0335	Miscellaneous storage in hosebed above the ladder tunnel. Upper area open and main hosebed cover to be used to cover top area of the storage area. There is to be a bolted end plate at the rear of the storage area, horizontal adjustable tracks 60" from the rear mounted forward with a divider.	$329
3365-0351	Box type enclosure shall be provided for Little Giant Model 17 ladder. Box shall be mounted rearward on bi-directional tray. The box shall be approximately 58" long X 28" high X 8.63" wide. The box ends (left and right) shall be left open, Straps shall be provided on each end to secure the ladder in place. WOP aerial body only.	$663
3370-0023	Tracks for adjustable shelf and/or adjustable tray in single depth or rescue style single depth compartment. Location: [#LOC].	$170
3370-0025	Permanent shelf. Locate in [#LOC].	$88
3370-0026	Adjustable shelf. For compartments that are full height/full depth or lower compartments with full depth. Location: [#LOC].	$219
3370-0027	Tracks for adjustable shelf and/or adjustable tray in the lower area of the compartment. Location: [#LOC].	$86
3370-0028	Tracks for adjustable shelf and/or adjustable tray in the upper area of the compartment. Location: [#LOC].	$46
3370-0029	Adjustable shelf. For compartments with upper shallow depth. Location: [#LOC].	$112
3370-0031	Storage system for compartment L1. Includes vertical partition 24" from right side wall, (2) adj. HD tool boards to rear of partition, roll-out tray w/24" 500 lb. slides on floor ahead of partition & fixed shelf at the top of the rear wall offset ahead of partition. HP75 / HP78 SideStacker.	$2,464
3370-0034	Shelf full transverse. Locate in [#LOC].	$451
3370-0035	Shelf 1/2 depth in transverse compartment. Locate in [#LOC].	$360
3370-0036	Shelf 2/3 deep in transverse compartment. Locate in [#LOC].	$405
3370-0038	Adjustable shelf. For lower area of compartments with multiple depths. Location: [#LOC].	$219
3370-0039	Adjustable shelf. For upper area of compartments with multiple depths. Location: [#LOC].	$219
3370-0040	Adjustable shelf for single depth or rescue style single depth compartment. Location: [#LOC].	$219
3370-0041	Adjustable shelf full width for transverse compartment (Memphis aerial). Includes 2" lips on each end, (8) 5" holes lengthwise down center of shelf, 8" high bolt-on alum stop close to left side (for stokes entering from right), straps below shelf for 19W x 2H x 73L backboard w/stop on left side for backboard. Location: L1/R1	$1,213
3370-0042	Tracks for adjustable shelf and/or adjustable tray in transverse compartment. Location: L1/R1.	$337

3370-0051	Tracks for adjustable shelf and/or adjustable tray in 1/2 or 2/3rds depth of transverse compartment. Location: [#LOC].	$255
3370-0052	Adjustable shelf. For non-transverse compartments that are 16" or greater in depth. Location: [#LOC].	$219
3370-0053	Adjustable shelf. For non-transverse compartments that are up to 15.99" deep. Location: [#LOC].	$112
3370-0054	Tracks for adjustable shelf and/or adjustable tray in compartments 16" or greater in depth. Location: [#LOC].	$170
3370-0055	Tracks for adjustable shelf in shallow compartments up to 15.99" deep. Location: [#LOC].	$86
3370-0112	Adjustable shelf tracks to be mounted at Customer's final inspection.	$170
3370-0115	Shelf approx. 46"long L1/R1 transverse compartment. Locate in center of transverse up high.	$360
3370-0116	Tracks for adjustable shelf and/or adjustable tray in transverse compartment. Note two (2) center tracks on forward and rear wall to extend up to within 2" of ceiling and two outer tracks to remain at standard height. Location: L1/R1.	$556
3370-0129	Shelf 1/2 depth in transverse compartment. Rear lip to be 4" high. Locate in [#LOC].	$388
3370-0133	Tracks shall be provided for use with adjustable shelves and/or trays. The tracks shall align for use of a shallow depth adjustable shelf(s) and/or adjustable tray(s). The tracks shall be ran from floor to ceiling to allow the shallow depth adjustable shelf/tray to have full compartment height adjustability. Position tracks within compartment for optimal adjustability. The tracks as installed from floor to ceiling may be impacted by other items located within the compartment; tracks may be cut and continued again as required to provide full height adjustability. The tracks shall be vertically mounted and attached to the side and/or rear walls of the compartments. Location: [#LOC].	$170
3370-0134	Fixed shelf modification for shelf to have 1" lips. Location: [#LOC].	$100
3370-0142	Permanent shelf for Hurst power unit. Locate on forward bulkhead high as possible [#LOC].	$612
3370-0144	Permanent shelf, bolt in, suspended from ceiling and forward in compartment. Locate in [#LOC].	$269
3380-0014	Roll-out generator tray. Includes tray interlock. Locate [#LOC].	$715
3380-0015	Fixed back wall mounted toolboard. Toolboard to be spaced off wall a half inch. Location(s): [#LOC].	$198
3380-0017	Floor mounted roll-out/tilt down tray. Mount on [#LOC] floor.	$1,007
3380-0018	Adjustable roll-out toolboard. Includes upper and lower adjustable track and gas shock actuated. Toolboard sized to compartment height and depth as applicable. Location(s): [#LOC].	$739
3380-0019	Running board suction tray. Includes removable slats in bottom of tray. Location(s): [#LOC]	$471
3380-0022	Floor mounted roll-out tray. Includes 500lbs. tray capacity. Location: [#LOC].	$784
3380-0023	Adjustable mounted roll-out/tilt-down tray. Location(s): [#LOC]. For use in single depth or rescue style compartments.	$1,272
3380-0024	Adjustable mounted roll-out tray. Includes 250 lbs tray capacity. Location(s): [#LOC]	$863
3380-0025	Adjustable mounted roll-out tray. Includes 500 lbs tray capacity. Location(s): [#LOC]	$1,048
3380-0027	Floor mounted Slide Master with tray. Model SM3-SP. Single depth. Mount on [#LOC] floor.	$806
3380-0028	Adjustable mounted Slide Master with tray. Model SM3-SP. Single depth. Location(s): [#LOC]	$1,069
3380-0029	Floor mounted bi-directional Slide Master with tray. Model SM2-D-SP. Mounted on [#LOC].	$1,389
3380-0036	Fixed back wall mounted peg toolboard. Toolboard to be spaced off wall a half inch. Location(s): [#LOC].	$237
3380-0038	Floor mounted roll-out tray with Jonathan Slides. Includes 400lbs. tray capacity. Mount on [#LOC] floor.	$1,371
3380-0039	Adjustable mounted roll-out tray with Jonathan Slides. Includes 400 lbs tray capacity. Location(s): [#LOC]	$1,633
3380-0040	Vertically hinged swing-out tool board. Location: [#LOC]. Hinge along forward compartment wall and position centered between door and back wall. Includes butterfly latch to secure in the closed position that is accessible from the ground.	$1,390
3380-0041	PAC TRAC panels vertically stacked on back wall of compartment. Locate: [#LOC].	$718
3380-0045	Floor mounted Slide Master with tray. Model SM3-SP. 1/2 depth transverse or full depth on non transverse. Mount on [#LOC] floor.	$1,051
3380-0049	Running board suction tray (floating style). Includes tapered 3" front corner and removable slats in bottom of tray. Location(s): [#LOC].	$611
3380-0052	Rollout tool boards (PR). To hold Memphis F.D aerial compliment of Holmatro tools (Bracketry to be dealer installed). Locate against front and rear wall of R1.	$3,350
3380-0055	Floor mounted roll-out/tilt down tray with aluminum frame. Mount on [#LOC] floor.	$980
3380-0056	Adjustable mounted roll-out/tilt down tray with aluminum frame. Location(s): [#LOC]. For use in single depth or rescue style compartments.	$1,242
3380-0060	Adjustable tool board with 500 lbs slides. Includes upper and lower adjustable track and gas shock actuated. Tool board sized to compartment height and depth as applicable. Location(s): [#LOC].	$1,016
3380-0061	Compartment underbody. Includes drop down front door with D-ring latches. Locate [#LOC].	$1,375
3380-0062	Adjustable peg tool board. Includes upper and lower adjustable track and gas shock actuated. Tool board sized to compartment height and depth as applicable. Location(s): [#LOC].	$888

3380-0063	Ready Respond Storage cabinet. Includes (5) drawers with gray fronts. No side trim required. Locate floor mounted in [#LOC].	$3,644
3380-0065	Vertically hinged swing-out toolboard. Location: [#LOC]. Hinge along forward compartment wall and position centered between door and back wall. Includes D-Ring latch to secure in the closed position that is accessable from the ground.	$1,390
3380-0068	Floor mounted equally sized roll-out trays (PR). Includes 250lbs. tray capacity. Mount on [#LOC] floor.	$1,198
3380-0069	Adjustable tool board - notched. Includes upper and lower adjustable track and gas shock actuated. Tool board sized to compartment height and depth as applicable. Upper end to be notched around compartment offset to provide maximum height. Location(s): [#LOC]	$846
3380-0070	(2) Rollout Trays with 500lb slides approx. 27"W x 44"D to be floor mounted, one each side on upper transverse floor offset forward in L1/R1.	$1,083
3380-0071	Tool board on dual direction 1000 lb SlideMaster. Includes lock-in/lock-out. Tool board sized to compartment height and depth as applicable. Location(s): [#LOC]	$1,993
3380-0074	Tool board HD adjustable. Includes return style re-enforcing bends on vertical front and rear edges of tool board, upper and lower adjustable track and gas shock actuated. Tool board sized to compartment height and depth as applicable. Location(s): [#LOC]	$791
3380-0076	Floor mounted roll-out tray, with gas spring. 500 lbs. capacity. Location: [#LOC].	$601
3380-0077	Adjustable roll-out tray with 500 lbs. capacity. Location(s): [#LOC].	$863
3380-0079	Adjustable heavy duty tool board. Includes return style reinforcing bends on vertical front and rear edges of tool board, upper and lower adjustable track and gas shock actuated. Tool board sized to compartment height and depth as applicable. Location(s): [#LOC].	$791
3380-0080	Adjustable heavy duty peg tool board. Includes return style re-enforcing bends on vertical front and rear edges of tool board, upper and lower adjustable track and gas shock actuated. Tool board sized to compartment height and depth as applicable. Location(s): [#LOC]	$939
3380-0081	Roll-out generator tray. Includes tray interlock. Locate [#LOC].	$715
3380-0082	Slidemaster frame powder coated black (EA). Location: [#LOC].	$137
3380-0086	Vertically hinged swing-out pegboard toolboard. Location: [#LOC]. Hinge along forward compartment wall and position centered front to rear. Includes D-ring latch to secure in the closed position that is accessible from the ground.	$1,474
3380-0087	Adjustable toolboard with 500 lb. slides for use with deep compartments. Includes upper and lower adjustable track with lock in/lock out latch. Toolboard sized to compartment height and depth as applicable. Location(s): [#LOC].	$1,016
3380-0093	Floor mounted roll-out/tilt down tray. Mount on [#LOC] floor. For use on half transverse trays.	$1,007
3380-0094	Floor mounted roll-out/tilt down tray. Mount on [#LOC] floor. For use on two thirds transverse trays or in the B1above the frame rails.	$1,007
3380-0095	Adjustable mounted roll-out/tilt down tray. Location(s): [#LOC]. For use on half transverse trays or upper deep B1 compartment.	$1,272
3380-0096	Adjustable mounted roll-out/tilt down tray. Location(s): [#LOC]. For use on two thirds transverse trays or B1above the frame rails.	$1,272
3380-0099	Vertically hinged swing-out toolboard. Location: [#LOC]. Hinge along rearward compartment wall and position centered between door and back wall. Includes D-Ring latch to secure in the closed position that is accessable from the ground and a positive hold open device in the open position.	$1,390
3380-0100	SlideMaster slideout tray w/hose tray approx 8.625 wide x 124 long x 16 deep to hold 200' of 5" LDH. Includes handrail at rear top corner of tray and slotted holes in floor for hose ventaltion. Floor mounted at rear of body in ladder tunnel on officer side.	$1,397
3380-0133	On Scene Solutions floor mounted roll-out/tilt down tray mount on [#LOC] floor. This tray shall not exceed 30" in depth.	$1,366
3380-0134	On Scene Solutions adjustable mounted roll-out/tilt down tray mount in the [#LOC] compartment. This tray shall not exceed 30" in depth.	$1,624
3380-0150	Fixed back wall mounted toolboard with swirled finish. Toolboard to be spaced off wall a half inch. Location(s): [#LOC].	$326
3380-0155	Running board suction tray. Includes Turtle Tile brand black floor matting in bottom of tray. Location(s): [#LOC].	$471
3380-0158	Floor mounted roll-out tray. Includes OnScene Solutions slide 81900 series. 500 lbs. tray capacity. Location: [#LOC].	$1,774
3380-0159	Adjustable tool board with 500 lbs slides. Includes upper and lower adjustable track, .75" x .75" aluminum angle welded to front edge and gas shock actuated. Tool board sized to compartment height and depth as applicable. Location(s): [#LOC].	$791
3380-0162	Vertically hinged swing-out pegboard toolboard. Location: [#LOC]. Hinge along rearward compartment wall and position centered front to rear. Includes latch to secure in the closed position and gas shock to secure in the open position that is accessible from the ground.	$1,508

3380-0167	Vertically hinged heavy duty swing-out toolboard. Location: [#LOC]. Hinge along forward compartment wall and position centered between door and back wall. Includes D-Ring latch to secure in the closed position that is accessible from the ground. Hinge made from 1/2" stainless steel rod and stainless steel plate with flanged bearing top and bottom.	$1,459
3380-0168	Floor mounted roll-out tray with 500 lbs. capacity. Locate in R1 offset forward. Tray to be half the width of compartment.	$601
3380-0169	Adjustable roll-out tray with 500 lbs. capacity. Tray to have 6" lips. Location(s): [#LOC].	$1,111
3380-0171	Floor mounted bi-directional Slide Master with tray. Model SM2-D-SP. Rear wall of tray to extend up as high as possible to make a toolboard. Includes return style reinforcing bends on vertical sides and horizontal top edges of toolboard. Mounted on floor of L1/R1 transverse.	$1,778
3380-0173	Vertically hinged heavy duty swing-out pegboard toolboard. Location: [#LOC]. Hinge along forward compartment wall and position centered between door and back wall. Includes D-Ring latch to secure in the closed position that is accessable from the ground. Hinge made from 1/2" stainless steel rod and stainless steel plate with flanged bearing top and bottom.	$1,543
3380-0177	Prepare upper back walls of compartment L3 and L4 with studs for dealer to provide plywood (or whatever material) toolboard panels. Studs are to be threaded stainless steel.	$263
3380-0179	Vertically hinged heavy duty swing-out aluminum tool board(s) shall be provided for compartment(s) [#LOC]. The tool board shall be constructed of 1/4" (.25") smooth aluminum plate, peg board style, and be sized in height and length as applicable. The tool board shall be position centered between door and back wall and hinged along rearward wall mounted with two large pin hinge points, attached to a 3" x 3" extrusion, that will permit the board to swing out of the compartment for easier access to tools and/or equipment. The tool board shall latch to a 3" x 3" extrusion, with a Tri-Mark latch to secure the toolboard in the closed position.	$1,885
3380-0180	(2) Hand hold slotted cut-outs shall be provided on rollout tray's front wall (one each side), for easier roll-out/roll-in. Rubber trim shall line the hand cut outs. Approximate size of cut-out to be 1-1/2" x 5". Locate on each tray in [#LOC].	$34
3380-0181	Vertically hinged swing-out toolboard. Located in [#LOC] 12" from door. Hinge along rearward compartment wall and position centered between door and back wall. Includes D-Ring latch to secure in the closed position that is accessable from the ground and a positive hold open device in the open position.	$1,390
3380-0182	Floor mounted slidemaster roll-out tray to hold (3) SCBA donning stations. Donning stations will be Zico spring clip brackets. Location [#LOC].	$1,588
3380-0188	Slide Master floor mounted roll-out tray Model # SM3-SP shall be provided. The capacity rating shall be 1000 pounds distributed load and 500 pounds end load at full extension. Location: [#LOC].	$1,754
3380-0189	Running board suction tray with a diamond plate door hinged on the inboard side with quick release flush latch(s) and a lanyard type holding device. Includes removable slats in bottom of tray. Location(s): [#LOC].	$998
3380-0191	Vertically hinged heavy duty swing-out toolboard. Location: [#LOC]. Hinge along rearward compartment wall and position centered between door and back wall. Includes D-Ring latch to secure in the closed position that is accessible from the ground. Hinge made from 1/2" stainless steel rod and stainless steel plate with flanged bearing top and bottom.	$1,459
3380-0194	PAC TRAC panels vertically stacked on each side of Swing-out Toolboard. Locate:[#LOC].	$1,435
3380-0196	Vertically hinged heavy duty swing-out pegboard toolboard. Location: [#LOC]. Hinge along rearward compartment wall and includes D-Ring latch to secure in the closed position that is accessible from the ground. Hinge made from 1/2" stainless steel rod and stainless steel plate with flanged bearing top and bottom.	$1,529
3380-0197	Floor mounted roll-out/tilt down tray with aluminum frame. Mount on [#LOC] floor. Tray(s) to have 2" high sides all around IPO standard.	$980
3380-0198	Adjustable mounted roll-out/tilt down tray with aluminum frame. Location(s): [#LOC]. For use in single depth or rescue style compartments.	$1,242
3380-0199	Floor mounted bi-directional Slide Master with tray. Model SM2-D-SP. Includes fixed toolboard centered in tray lengthwise extending up as high as possible. Toolboard to be fabricated from 1.5" square aluminum tubing for frame and centered inside of frame shall be .250" smooth plate with bracing on each end for rigidity when tools are mounted. Tray/toolboard mounted on L1/R1 transverse floor.	$2,152
3380-0200	Running board suction tray (floating style). Includes tapered 3" front corner and removable slats in bottom of tray. Location(s): [#LOC]. Trays to be smooth plate painted black durabak.	$774
3380-0203	Adjustable tool peg board. Includes upper and lower adjustable track and gas shock actuated. Tool board sized to compartment height and depth as applicable. Location(s): [#LOC].	$858
3380-0204	Floor mounted Slide Master with tray. Model SM3-LP (low profile). Single depth. Mount on [#LOC] floor.	$861
3380-0206	Adjustable pegboard toolboard with 500 lb. slides for use with deep compartments. Includes upper and lower adjustable track with lock in/lock out latch. Toolboard sized to compartment height and depth as applicable. Location(s): [#LOC].	$1,082

3380-0210	Pac Trac panels vertically stacked on forward wall of transverse storage box located in L1/R1.	$1,312
3390-0041	Compartment R1 to have the following: (1) vertical partition located 24" off rearward wall and (1) adjustable shelf with adjustable tracking forward area of partition.	$575
3390-0053	Lower rear compt to have two vertical dividers creating three storage areas approx 8.25" W x 7.25" H x 96"L with .375 polyethyene on floor of each area.	$851
3390-0056	Storage system for compartment L1. Includes vertical partition centered from side to side, (2) adj. tool boards to rear of partition, (1) adj. shelf ahead of partition in lower section. HP75 / HP78 SideStacker.	$1,975
3390-0057	Storage system for compartment R1. Includes vertical partition centered from side to side, (1) floor mounted roll-out tray w/24" 500# slides ahead of partition, (1) adj. shelf rearward of partition. HP75 / HP78 SideStacker.	$1,283
3390-0058	Storage system for compartment L1. Includes vertical partition 24" from right side wall, (2) adj. tool peg boards to rear of partition, adj shelf lower ahead of partition & fixed shelf at the top of the rear wall offset ahead of partition. HP75 / HP78 SideStacker	$2,326
3390-0061	Storage system for compartment L1; Vertical partition 12" from right side wall, (1) adj. tool board to rear of partition & (2) adj shelves ahead of partition in lower section. HP75 / HP78 SideStacker	$1,453
3390-0064	Compartment R4 to have the following storage package. (1) full height vertical partition at rear wall offset and the following located forward of the partition: (1) adjustable shelf in upper area, (1) permanent shelf at offset and (1) floor mntd roll-out tray w/500lb slides.	$1,219
3390-0065	Compartment L4 to have the following storage package. (1) full height vertical partition at rear wall offset and the following located forward of the partition: (1) adjustable shelf in upper area, (1) permanent shelf at offset, (1) adjustable roll-out tray w/250lb slides below perm shelf and (1) floor mntd roll-out tray w/250lb slides.	$1,978
3390-0066	Compt L-1 to have the following storage package. (1) Vertical partition just rearward of breaker box full height. (1) permanent shelf at offset rearward of vertical partition. (1) Adjustable shelf in upper area rearward of vertical partition. (1) Adjustable rollout tray w/250lb slides rearward of vertical partition and (1) floor mounted rollout tray w/250lb slides rearward of vertical partition.	$2,066
3390-0069	Compartment L3 to have the following: (1) vertical partition located 30" from forward wall and (2) adjustable shelves with adjustable tracking forward and rearward area of partition.	$1,240
3390-0072	Compartment storage package to include (1) vertical partition to rear of reel and (1) adjustable shelf to rear of partition. Location: Driver and officer side compartments over forward tandem.	$1,163
3390-0075	Storage system for compt L-1. Includes (2) vertical partitions (1) 26" from right side wall and (1) 12" ahead of full height partition from fixed shelf to floor, (2) Adj pull-out toolboards rearward of full height partition, (1) Fixed shelf at offset forward of full height partition, (1) Adj shelf forward of small partition, (1) 250# roll-out tray forward of full height partition floor mounted, and (1) Vert extinguisher rack located in rollout tray - rack to be alum approx 8"W X 24"L X 8"H with (2) partitions evenly spaced.	$3,250
3390-0076	Compartment L4 to have the following storage package. (1) full height vertical partition at rear wall offset and the following located forward of the partition: (1) permanent shelf at offset and (1) floor mntd roll-out tray w/250lb slides.	$884
3390-0077	Compartment L1 to have the following storage package. (1) permanent shelf at offset, (1) vertical partition 20" off rear wall below permanent shelf and the following located forward of the partition: (1) adjustable shelf and (1) floor mntd roll-out tray w/250lb slides.	$1,186
3390-0078	Compartment R4 to have the following storage package. (1) full height vertical partition at rear wall offset and the following located forward of the partition: (1) adjustable shelf in upper area, (1) permanent shelf at offset and (1) floor mntd roll-out tray w/250lb slides.	$1,037
3390-0080	Compartment L3 to have the following: (1) vertical partition located 14" from forward wall and (2) adjustable shelves with adjustable tracking forward of partition.	$802
3390-0085	Storage system for compartment R3. Includes (1) adj. tool board in frt half of compt.and roll-out tray w/24" 250# slides on floor in rear half of compartment.	$1,336
3390-0104	Compartment L1/R1 transverse to have the following storage package: (3) vertically stacked horizontal boxes on R1 forward wall; (1) approx. 8"W x 13"H x 60"D lower, (1) approx. 8"W x 8"H x 60"D middle and upper. Each box supplied with nylatron on floor. (1) floor mntd SlideMaster bi-directional rollout tray located rear of boxes and (1) full width/depth permanent shelf at top of boxes.	$2,921
3390-0105	Compartment L3 to have the following storage package: (1) vertical partition 24" off forward wall and the following located forward of the partition: (2) adjustable shelves. Rearward of partition: (2) adjustable tool boards.	$2,280
3390-0107	Compartment [#LOC] to have the following: (1) permanent shelf located at compartment break with (1) vertical partition located 12" off rearward wall mounted to bottom of permanent shelf. The following located forward of the partition: (1) floor mntd roll-out tray w/250lb slds, (1) adj roll-out tray w/250lb slds and (1) adjustable shelf. Rearward of partition: (2) adjustable tool boards.	$3,400
3390-0108	Compartment L5 to have the following storage package. (1) permanent shelf located at upper offset, (2) vertical partitions; (1) front and (1) rear at offsets and (1) adjustable shelf between vertical partitions.	$640

3390-0109	Compartment [#LOC] to have the following storage package: (1) vertical partition 17" off rearward wall and the following located forward of the partition: (1) floor mntd roll-out tray w/250lb slds and (2) adjustable shelves. Rearward of partition: (1) adjustable tool board.	$2,144
3390-0119	Storage system for compartment L1. Includes (1) floor mounted tray 500#, (1) permanent shelf at offset, (1) vertical partition approx 15" off forward wall upper area, (1) Adjustable shelf rearward of vertical partition. HP75 / HP78 SideStacker	$1,332
3390-0125	Compartment L5 to have the following storage package. (1) permanent shelf located at upper offset, (1) vertical partition at front offset and (1) adjustable shelf rear of vertical partition.	$551
3390-0126	Compartment R2 to have the following storage package: (1) permanent shelf at offset, (1) vertical partition centered off forward wall and the following located forward of the partition: (1) adjustable tool board. Rearward of partition: (2) adjustable shelf.	$1,407
3390-0127	Compartment [#LOC] to have the following storage package: (1) vertical partition 24" off forward wall and the following located rearward of the partition: (1) adjustable shelf.	$501
3390-0133	Compartment L2 to have the following storage package: (1) vertical partition 24" off forward wall and the following located forward of the partition: (2) adjustable shelves. Rearward of partition: (2) adjustable peg tool boards.	$2,350
3390-0134	Storage system for compartment L1. Includes vertical partition 28" from left side wall, (2) adj. HD tool boards to rear of partition, and (2) adj. shelves in lower area ahead of partition. HP75 / HP78 SideStacker.	$2,384
3390-0135	Storage system for compartment R1. Includes (1) fixed shelf with a 1" lip 30" from floor, (1) fixed shelf 40" from floor, (1) vertical partition between floor and lower shelf (centered left to right), (1) vertical partition above top fixed shelf 24" from left side, (1) floor mounted roll-out tray w/500# slides ahead of partition, and (1) floor mounted roll-out tray w/500# slides rearward of partition. HP75 / HP78 SideStacker with tall R1.	$1,770
3390-0143	Compartment [#LOC] to have the following storage package: (1) vertical partition 12" off forward wall and the following located rearward of partition: (1) floor mntd roll-out tray, (1) adjustable shelf and (1) adjustable roll-out/tilt down tray.	$2,237
3390-0147	Storage system for compartment L1. Includes fixed shelf at offset (above extrusion if applicable), vertical partition above permanent shelf 20" from left side wall and (2) adj. shelves rearward of partition. HP75 / HP78 SideStacker.	$893
3390-0148	Storage system for compartment R1. Includes fixed shelf at offset (above extrusion if applicable), vertical partition above permanent shelf adjacent to DEF tank and (1) adj. shelf rearward of partition. HP75 / HP78 SideStacker.	$674
3390-0150	Storage system for compartment L1. Includes vertical partition 24" from right side wall, (2) adj. HD tool boards to rear of partition and a roll-out tray w/24" 500# slides on floor ahead of partition. HP75 / HP78 SideStacker.	$2,375
3390-0158	Storage system for compartment R1. Includes vertical partition 24" from left side wall, (2) adj. HD tool boards to rear of partition, (2) adj roll-out tilt down trays ahead of partition (above offset) and a roll-out tray w/24" 500# slides on floor ahead of partition. HP75 / HP78 SideStacker.	$5,086
3390-0159	Storage system for compartment L1. Includes vertical partition 24" from right side wall, (2) adj. HD tool boards to rear of partition, (2) adj roll-out tilt down trays ahead of partition (above offset) and a roll-out tray w/24" 500# slides on floor ahead of partition. HP75 / HP78 SideStacker.	$5,086
3390-0164	Storage system for compartment R5. Includes vertical partition centered from side to side, (1) adj. shelf ahead of partition and (1) floor mounted roll-out tray w/ 500# slides rearward of partition. Aerial application.	$1,368
3390-0165	Storage system for compartment L2. Includes (1) fixed shelf just below cord reel and (1) adj. HD tool board below fixed shelf. Aerial application.	$878
3390-0166	Storage system for compartment R2. Includes (1) fixed shelf just below cord reel and (1) adj. HD tool board below fixed shelf. Aerial application.	$878
3390-0170	Storage system for compartment L6. Includes vertical partition 24" from right side wall, (2)HD tool boards to rear of partition and (2) adjustable shelves ahead of partition. Aerial application.	$2,383
3390-0174	Storage system for compartment L1. Includes vertical partition 24" from right side wall, (2) adj. tool boards to rear of partition, (1) adj roll-out tilt down trays ahead of partition (above offset) and roll-out tray w/24" 500# slides on floor ahead of partition. HP75 / HP78 SideStacker.	$3,620
3390-0175	Storage system for compartment R1. Includes vertical partition 24" from left side wall, (2) adj. tool boards to rear of partition, (1) adj roll-out tilt down tray ahead of partition (above offset) and roll-out tray w/24" 500# slides on floor ahead of partition. HP75 / HP78 SideStacker.	$3,620
3390-0180	Storage system for compartment L3. Includes vertical partition 30" from forward wall, (2) adj. HD tool boards to rear of partition and (2) adjustable shelves ahead of partition.Note:Adjustable tracks for toolboards to run from side to side on compartment floor and ceiling. Aerial application.	$2,551
3390-0181	Storage system for compartment R2. Includes (1)fixed shelf at offset and the following below:(1) vertical partition 10" from forward wall and(1) adjustable shelf to rear of partition.Aerial application.	$673

3390-0185	Bolt-in 3/16" diamond plate partition wall. Locate in upper dunnage area beneath aerial between and to rear of L3/R3 from side to side.	$199
3390-0187	Compartment [#LOC] to have the following storage package: (1) vertical partition 8" off rearward wall and the following located forward of the partition: (2) adjustable shelves with tracks and (1) floor mounted roll-out tray w/500lb slides.	$1,404
3390-0202	Storage system for compartment R2. Includes vertical partition 22" from forward wall, (1) adj. HD tool board to rear of partition and (2) adjustable shelves ahead of partition. Aerial application.	$1,593
3390-0204	Storage system for compartment R2. Includes vertical partition 30" from forward wall, (2) adj. HD peg tool boards to rear of partition,(3) adjustable shelves and (1) adjustable rollout tilt/down tray ahead of partition. Aerial application.	$4,141
3390-0205	Storage system for compartment L1. Includes vertical partition 24" from right side wall, (2) adj. HD tool boards to rear of partition, (1) adj. shelf lower ahead of partition & fixed shelf at the top of the rear wall offset ahead of partition. HP75 / HP78 SideStacker	$2,252
3390-0208	Storage system for compartment L1. Includes vertical partition 42" from left side wall, roll-out tray w/24" 500# slides on floor, adj. rollout tray lower & adj. shelf upper ahead of partition. (2) adj. shelves (1 upper/ 1 lower) to rear of partition. HP75 / HP78 SideStacker	$2,653
3390-0209	Storage system for compartment R1. Includes vertical partition 24" from left side wall, (2) adj. HD tool boards to rear of partition, roll-out tray w/24" 500# slides on floor ahead of partition & (2) adj. shelves ahead of partition (1 upper/ 1 lower). HP75 / HP78 SideStacker	$2,983
3390-0223	Storage system for compartment L1. Includes vertical partition 24" from right side wall, (2) adj. HD tool boards to rear of partition, roll-out tray w/24" 500# slides on floor ahead of partition & adj. shelf ahead of partition (upper). HP75 / HP78 SideStacker	$2,764
3390-0228	Storage system for compartment [#LOC]. Includes (1) fixed shelf at offset and the following below: (1) vertical partition at compartment depth offset and (1) adjustable shelf ahead of partition. Aerial application.	$673
3390-0249	Storage system for compartment R1. Includes (1) roll-out tray w/24" 500# slides on floor, (1) adjustable shelf upper section and (1) adjustable rollout tray sized to be adjustable from floor to ceiling. HP75 / HP78 SideStacker	$1,978
3390-0254	Storage system for compartment L1. Includes vertical partition 24" from right side wall, (2) adj. HD tool boards W/PAC TRAC to rear of partition (mounted as high as possible), (1)roll-out tray w/24" 500# slides on floor and (1)adjustable rollout tray w/24" 500# slides (lower) ahead of partition and fixed shelf at the top of the rear wall offset ahead of partition. HP75 / HP78 SideStacker.	$4,165
3390-0263	Storage system for compartment L1. Includes vertical partition 24" from right side wall, (2) adj. HD tool boards to rear of partition & fixed shelf at the top of the rear wall offset ahead of partition. HP75 / HP78 SideStacker.	$1,864
3390-0264	Storage system for compartment L2. Includes vertical partition offset 16" from rearward wall, (1) adj. HD tool board to rear of partition and (2) adjustable rollout trays ahead of partition. Aerial application.	$2,857
3390-0265	Storage system for compartment L2. Includes vertical partition offset 20" from rearward wall, (2) adj. HD tool boards to rear of partition. (1) adjustable rollout tray, (1) floor mounted rollout tray and (1) adjustable shelf all ahead of partition. Aerial application.	$3,570
3390-0269	Storage system for compartment L1. Includes vertical partition centered from side to side, (1) adj. HD tool board to rear of partition, adj. shelf ahead of partition in lower with fixed shelf above at offset. HP75 / HP78 SideStacker.	$1,597
3390-0278	Compartment [#LOC] to have the following storage package: (1) vertical partition approximately 12" off rearward wall and the following located forward of the partition: (2) adjustable roll out heavy duty tool boards w/500lb slides . Rearward of partition: (3) adjustable shelves.	$2,506
3390-0279	Compartment [#LOC] to have the following storage package: (1) vertical partition rearward of cord reel and the following located rearward of partition: (1) adjustable shelf.	$589
3390-0280	Storage system for compartment [#LOC]. Includes vertical partition offset 20" from rearward wall, (2) adj. HD tool boards to rear of partition. (1) Adjustable rollout tray, (1) floor mounted rollout tray and (1) adjustable shelf (notched for clearance as required in the upper storage location) all ahead of partition.	$3,570
3390-0286	Compartment [#LOC] to have the following storage package: (1) vertical partition approximately 20" off rearward wall and the following located forward of the partition: (1) floor mounted roll out tray w/ 500lb slides and (2) adjustable roll-out tray w/500lb slides (1) upper and (1) lower. Rearward of partition: (2) adjustable roll out heavy duty tool boards w/500lb slides.	$3,757
3390-0290	Compartment [#LOC] to have the following storage package: (1) vertical partition 15" off rearward wall and the following located forward of the partition: (1) 2"x2" angle floor mounted to outside edge and (1) permanent shelf just below breaker box. Rearward of partition: (1) adjustable heavy duty tool boards.	$1,189
3390-0291	Compartment [#LOC] to have the following storage package in the lower full depth area: (1) vertical partition 15" off forward wall and the following located forward of the partition: (1) adjustable heavy duty toolboard. Rearward of partition: (1) adjustable shelf.	$1,328

3390-0293	Compartment [#LOC] to have the following storage package: (1) vertical partition 12" off forward wall, and the following located forward of the partition: (1) adjustable tool board, rearward of the partition: (3) adjustable shelves.	$2,042
3390-0294	Compartment [#LOC] to have the following storage package: (1) vertical partition 8" off rearward wall, and the following located forward of the partition: (1) floor mntd roll-out tray w/500lb slds, (3) adjustable shelves. Rearward of partition: open for storage.	$1,651
4000	**Pumps/Tanks**	
4000-0036	Stainless Steel Victaulic couplings for all discharge and intake plumbing.	$3,728
4005-0010	Hale RSD (1250 GPM) single stage, PTO driven pump. For use with rear mount pump body and mid-ship engine applications.	$24,901
4005-0011	Hale 8FG Pump 3000/3500 GPM single stage	$40,338
4005-0012	Hale 8FGR 1500-2000 GPM Pump single stage	$38,562
4005-0013	Hale QFLO 750-1250 GPM pump, single stage.	$20,930
4005-0014	Hale QMID 1250 GPM single stage Pump	$28,210
4005-0015	Hale QMAX 1000-1250 GPM single stage Pump	$25,173
4005-0016	Hale QMAX 1000-2250 GPM single stage pump.	$25,173
4005-0017	Hale QTWO 1000-1250 GPM two stage Pump	$31,797
4005-0018	Hale QTWO 1500-2000 GPM two stage pump.	$32,645
4005-0019	Waterous CS 750-1250 single stage pump.	$21,975
4005-0020	Waterous CM 750-1250 two stage Pump	$25,240
4005-0021	Waterous CSU 1500-2250 GPM single stage pump.	$24,927
4005-0022	Waterous CMU 1500-2250 GPM two stage pump.	$37,832
4005-0036	Extended Hale Pump 1 Year Warranty in addition to the standard 2 year warranty.	$656
4005-0037	Extended Hale Pump 2 Year Warranty in addition to the standard 2 year warranty.	$1,261
4005-0038	Extended Hale Pump 3 Year Warranty in addition to the standard 2 year warranty.	$1,866
4005-0039	Extended Waterous Pump 3 Year Warranty in addition to the standard 2 year warranty.	$1,587
4005-0044	Rating 3000 GPM Industrial	$2,469
4005-0046	Hale QSMG 1000-2000 GPM Pump single stage Bronze (Dealer only)	$39,487
4005-0052	Hale QMAX 1500-2250 GPM single stage Pump with K Gear Box	$35,846
4005-0057	Hale DSD Pump 750/1500 GPM single stage	$28,444
4005-0060	Hale HPX300 BD26 Hale Portable Pump mounted in pan. W/Remote controls in Cab. Hook up to Chassis Fuel System.	$18,376
4005-0063	Hale QFLO Plus 750-1250 GPM Pump single stage	$38,717
4005-0079	Hale DSD Pump 750/1500 GPM single stage	$24,906
4005-0085	Hale QMAX-21L 1750 pump. Tradition.	$22,403
4005-0096	Waterous CMU 1500-2250 GPM two stage Pump	$28,252
4005-0098	Waterous Pump TPP-5 Extended Warranty.	$1,587
4005-0099	Hale Pump Pro-Tech Extended 3 Year Warranty in addition to the standard 2 year warranty.	$1,794
4005-0122	Waterous CSU 1500-2250 GPM single stage Pump. Shall include the Endurance CSC20 Waterous, C20 transmission.	$34,888
4005-0129	Hale 8FG single stage pump. For use with Industrial products.	$34,964
4005-0130	Hale QFLO-PLUS 750-1250 GPM Pump single stage	$20,714
4005-0131	E-ONE 1250-1500 GPM pump, single stage.	$31,890
4005-0143	Hale DSD Pump 750/1500 GPM single stage	$20,513
4005-0150	Hale MG Pump 500/1000 GPM single stage	$19,832
4005-0152	Hale MG Pump 500/1000 GPM single stage	$16,780
4005-0154	Hale QMAX-XS 1250-2250 GPM single stage pump.	$26,046
4005-0155	Hale RME/RGA 3000gpm Pump for Rear Mount with (3) 6" Inlets.	$35,724
4010-0030	300 gallon "T" water tank.	$4,564
4010-0031	400 gallon "T" water tank.	$5,874
4010-0032	450 gallon "T" water tank.	$6,145
4010-0033	500 gallon "T" water tank.	$6,414
4010-0034	750 gallon "T" water tank.	$8,244
4010-0047	280 gallon "T" water tank. Includes sleeve for ladder tunnel.	$5,672
4010-0048	250 gallon "T" water tank. Includes sleeve for ladder tunnel.	$5,672
4010-0049	490 gallon "T" water tank. Includes sleeve for ladder tunnel.	$7,522
4010-0050	480 gallon "T" water tank. Includes sleeve for ladder tunnel.	$7,522
4010-0051	475 gallon "T" water tank. Includes sleeve for ladder tunnel.	$7,522
4010-0052	450 gallon "T" water tank. Includes sleeve for ladder tunnel.	$7,522
4010-0053	430 gallon "T" water tank. Includes sleeve for ladder tunnel.	$7,522
4010-0126	560 Gallon "T" Water Tank. Note: Any foam cell(s) will reduce the overall water capacity.	$6,953
4010-0127	280 gallon "T" water tank.	$4,564
4010-0157	150 gallon "T" water tank.	$3,043
4010-0160	500 gallon "T" water tank.	$6,414
4010-0161	130 gallon "T" water tank.	$1,973
4010-0195	300 gallon "T" water tank. UPF Poly III blue fill tower.	$4,564

4010-0196	400 gallon "T" water tank. UPF Poly III blue fill tower.	$5,874
4010-0197	450 gallon "T" water tank. UPF Poly III blue fill tower.	$6,145
4010-0198	500 gallon "T" water tank. UPF Poly III blue fill tower.	$6,414
4010-0199	280 gallon "T" water tank. UPF Poly III blue fill tower. Includes sleeve for ladder tunnel.	$5,672
4010-0200	250 gallon "T" water tank. UPF Poly III blue fill tower. Includes sleeve for ladder tunnel.	$5,672
4010-0201	490 gallon "T" water tank. UPF Poly III blue fill tower. Includes sleeve for ladder tunnel.	$7,522
4010-0202	480 gallon "T" water tank. UPF Poly III blue fill tower. Includes sleeve for ladder tunnel.	$7,522
4010-0203	475 gallon "T" water tank. UPF Poly III blue fill tower. Includes sleeve for ladder tunnel.	$7,522
4010-0204	450 gallon "T" water tank. UPF Poly III blue fill tower. Includes sleeve for ladder tunnel.	$7,522
4010-0205	430 gallon "T" water tank. UPF Poly III blue fill tower. Includes sleeve for ladder tunnel.	$7,522
4010-0206	320 Gallon "T" Water Tank Note: Any foam cell(s) will reduce the overall water capacity. Tank capacity is 320 US gallon / 266 Imperial gallons / 1211 Liters.	$4,564
4015-0002	Mechanical speed counter for Hale pumps.	$286
4015-0007	Pump cooler, 1/4" valve with 3/8" tubing.	$149
4015-0008	Zinc anodes for Hale pump (PR), (1) discharge side and (1) intake side.	$288
4015-0012	Pump shift override, side panel mounted.	$663
4015-0013	Fire Research ThrottleXcel engine throttle. Includes engine gauges.	$1,418
4015-0014	Thermal Relief Valve - Hale TRV120.	$741
4015-0015	Valve relief system, Hale TPM.	$3,318
4015-0016	Thermal relief valve, Hale TRVL-120.	$1,343
4015-0018	Valve Inlet MIV-E - Hale. Location: [#LOC].	$3,072
4015-0019	Valve inlet MIV-M, Hale. Location: [#LOC].	$2,635
4015-0020	Valve Monarch Manual - Waterous. Location: [#LOC].	$3,948
4015-0021	Valve Monarch Air Actuated - Waterous. Location: [#LOC]	$4,893
4015-0022	Mechanical pump seal - Hale.	$678
4015-0026	Electronic speed counter for Waterous pumps.	$282
4015-0029	Hale pressure relief valve.	$1,163
4015-0030	Waterous pressure relief valve.	$1,300
4015-0031	Valve Relief System - Dual TPM Required for pump rating 2250 GPM and above.	$3,926
4015-0033	Hale 2-Stage Power Operated Transfer Valve.	$1,540
4015-0035	Waterous 2-Stage electronic transfer valve.	$1,301
4015-0036	6" Additional Intake for 2250 GPM Pump.	$1,776
4015-0037	Engine throttle, vernier.	$323
4015-0039	Pump seal mechanical for Waterous pump.	$638
4015-0041	Valve Monarch Electric - Waterous. Location: [#LOC].	$5,007
4015-0042	Waterous Overheat Protection Manager.	$956
4015-0043	Anodes for Hale Cafspro Pump - (Pair) (1) Discharge side and (2) Intake Side	$432
4015-0044	Anodes for Waterous pump - (Pair) (1) discharge side and (1) intake side.	$349
4015-0045	Throttle Selection Switch on Pump Operator's Panel for Back-Up of Relief and Throttle System.	$491
4015-0046	Hale pump shift override.	$1,057
4015-0047	Additional Hale Primer Valve. Located: [#LOC].	$544
4015-0048	Pump Shift Override - driver's side under runningboard forward of runningboard tray if applicable.	$663
4015-0049	Extend Fire Pump Grease Zerks to Operator's Panel	$381
4015-0050	Relocate Primer to the Outside of the Frame Rail on Driver's Side	$84
4015-0051	Two 4.5" Steamers for Hale Qflo Pump	$677
4015-0054	Additonal Waterous Primer. Located: [#LOC].	$1,219
4015-0055	6" Additional Intake for Industrial	$1,917
4015-0056	Air operated master pump drain (upgrade).	$197
4015-0062	Primer indicator light shall be provided on the pump operator's panel, color to be red.	$103
4015-0063	TPM Relief Valve outlet to be extended to the side of truck under runningboard or compartment.	$255
4015-0064	Hale Auto Fill/Thief Inlet 2.5" Tank Fill "AutoFill" Automatic Tank Fill Valve Location: [#LOC].	$3,912
4015-0065	Schedule 40 Stainless steel piping	$1,081
4015-0066	Trident Pump Primer W/3 Barrel Push Button Control.	$966
4015-0068	6" intake valve Akron electric with relief. Location: [#LOC].	$3,262
4015-0070	WATEROUS OIL PRIMER	$64
4015-0071	Valve Relief Thermal - Hale TRVL-120 W/Audible Alarm	$1,356
4015-0072	6" Intake Valve Elkhart Electric UBEC1 Control with Releif. Location: [#LOC]	$3,262
4015-0074	Manual remote operated master pump drain. The master drain control shall be clearly marked and placed in accessible location on driver side pump panel.	$290
4015-0080	6" Cap Vented "IPOS"	$15
4015-0081	Hale Semi-Automatic Priming push-button control.	$452
4015-0082	Electric Over Air Actuation Pump Cooler Valve	$392
4015-0083	Electric Over Air Actuation Engine Cooler Valve	$252
4015-0084	Pump Air Blow Out with 1/4 Snubber Vavlve.	$225

4015-0085	Auto Tank to Pump Operation. When Switched to Automatic Mode, The Tank Valve will Close When Suction Pressure Reaches 15 PSI & Opens When Suction PressureI Drops Below 15 PSI.	$1,661
4015-0086	Pump Cooler 1/4 Turn Valve	$235
4015-0087	Engine Cooler 1/4 Turn Valve	$235
4015-0088	Portable/Qmax Pump Shall be with Manifold and check valves for Front Bumper Turret and Ground Sweep. To be use dearing Pump&Roll operation.	$811
4015-0090	Akron Test Port for Master Gauges	$86
4015-0091	Pump cooler with .75" 1/4 turn valve.	$267
4015-0092	Hale Fill Thieft Steamers to be Flush + 2 Location [#LOC]	$1,435
4015-0109	Galvanized Victaulic Coupling. All Victaulic couplings shall galvanized.	$195
4015-0110	Valve Monarch Manual with Akron Intake Relief- Waterous. Location: [#LOC]	$2,742
4015-0111	Ferrell Compression Fittings for all Plastic Tubing in the Pump module plumbing.	$600
4015-0125	Red Switch Cover on Master Drain Switch.	$11
4015-0126	Hale PTO/MIDSHIP 250GPM to 1000gpm Pump Pressure Relief Valve	$2,057
4015-0127	Fire Research Infinity vernier type engine throttle.	$620
4015-0129	Waterous Overheat Protection Manager with audible alarm.	$899
4015-0130	Additional Trident Primer Valve, Located: [#LOC].	$326
4015-0131	Hale AnodePro Kit (3) Anodes with Flange. One on each suction tube and one anode on the discharge located as close to the center of the pump as possible.	$1,015
4015-0133	Anode for Darley pump - (1) intake side.	$377
4015-0134	Class 1 Engine Twister throttle, vernier	$785
4015-0135	Mechanical speed counter for pumps.	$347
4015-0136	Mechanical Darley pump seal.	$950
4015-0137	Valve Monarch Manual with Indicator lights - Waterous. Location: [#LOC].	$4,710
4015-0139	Darley Pump Overheat Thermal relief valve shall be provided with a light located on pump operator's panel.	$675
4015-0144	Manual remote operated master pump drain. The master drain control shall be clearly marked and placed in accessible location rearward below running board on driver side or L1 compartment.	$290
4015-0146	Four (4) 6.0" diameter suction inlet ports with 6" NST male threads and removable screens shall be provided, on left side.	$1,917
4015-0149	Four (4) 6.0" diameter suction inlet ports with 6" NST male threads and removable screens shall be provided, two (2) left side, and two (2) right side..	$1,917
4015-0152	Hale pump shift override. Pump shift to be recess behind pump operator pump panel with door.	$1,286
4015-0159	Valve Inlet MIV-E - Hale. Location: [#LOC].	$3,072
4015-0166	Pump cooler, automatic with 3/8" tubing. Include a check valve that is install between the pump discharge and tank that will automatically close when drafting.	$128
4015-0172	Primer indicator light shall be provided on the pump operator's panel, color to be red. The indicator light shall be upgraded to a LED indicator light IPOS.	$156
4015-0175	Additional control and air bleeder for the MIV-E to provide controls at: [#LOC].	$494
4020-0001	Additional tank sump.	$286
4020-0006	Direct 1.0" Water Tank Fill with Akron Valve Terminate with .75 Hose Bib. Location: driver side pump panel	$719
4020-0014	Water tank fill tower to be 6" wide x 17" long. Required on HP100/CR100/92RM with 2.5" tank fill.	$98
4020-0042	Water tank notched at forward top face (overall tank capacity will be reduced). Notch along forward top face of tank for storage pan clearance.	$520
4020-0063	Tank sump dump box (1) each side for newton dump mounting.	$285
4020-0064	Tank sump dump box (1) at rear for newton dump mounting.	$285
4100-0000	10 gallon integral foam tank for [#LOC]. Foam tank capacity will reduce the water tank capacity.	$865
4100-0006	40 gallon integral foam tank for [#LOC]. Foam tank capacity will reduce the water tank capacity. Tank capacity is 40 US gallon / 33 Imperial gallons / 151 Liters.	$1,098
4100-0008	20 gallon integral foam tank for [#LOC]. Foam tank capacity will reduce the water tank capacity. Tank capacity is 20 US gallon / 16 Imperial gallons / 75 Liters.	$930
4100-0009	30 gallon integral foam tank for [#LOC]. Foam tank capacity will reduce the water tank capacity. Tank capacity is 30 US gallon / 25 Imperial gallons / 113 Liters.	$1,008
4100-0011	300 gallon "T" foam tank.	$4,564
4100-0013	50 gallon integral foam tank for [#LOC]. Foam tank capacity will reduce the water tank capacity. Tank capacity is 50 US gallon / 41 Imperial gallons / 189 Liters.	$1,178
4100-0015	25 gallon integral foam tank for [#LOC]. Foam tank capacity will reduce the water tank capacity. Tank capacity is 25 US gallon / 20 Imperial gallons / 94 Liters.	$969
4100-0016	100 gallon integral foam tank for [#LOC]. Foam tank capacity will reduce the water tank capacity.	$2,189
4100-0019	TANK FOAM 1000 GALLON INDUSTRIAL	$10,928
4100-0025	600 gallon integral foam tank for [#LOC]. Foam tank capacity will reduce the water tank capacity. Tank capacity is 600 US gallons / 499 Imperial gallons / 2271 Liters.	$8,130

4100-0031	250 gallon integral foam tank for [#LOC]. Foam tank capacity will reduce the water tank capacity. Tank capacity is 250 US gallon / 208 Imperial gallons / 946 Liters.	$3,388
4100-0033	30 gallon integral foam tank for [#LOC]. UPF Poly III [#COL] fill tower. Foam tank capacity will reduce the water tank capacity.	$1,008
4100-0034	10 gallon integral foam tank for [#LOC]. UPF Poly III [#COL] fill tower. Foam tank capacity will reduce the water tank capacity.	$865
4100-0035	20 gallon integral foam tank for [#LOC]. UPF Poly III [#COL] fill tower. Foam tank capacity will reduce the water tank capacity.	$930
4100-0036	40 gallon integral foam tank for [#LOC]. UPF Poly III [#COL] fill tower. Foam tank capacity will reduce the water tank capacity.	$1,098
4100-0037	50 gallon integral foam tank for [#LOC]. UPF Poly III [#COL] fill tower. Foam tank capacity will reduce the water tank capacity.	$1,178
4100-0038	100 gallon integral foam tank for [#LOC]. UPF Poly III [#COL] fill tower. Foam tank capacity will reduce the water tank capacity.	$2,189
4100-0052	500 Gallon integral foam tank for [#LOC]. UPF Poly III [#COL] fill tower. The fill tower shall include a an expansion dome. Foam tank capacity will reduce the water tank capacity. Tank capacity is 500 US gallons / 416 Imperial gallons / 1892 Liters.	$6,776
4100-0053	30 Gallon external foam tank for [#LOC]. UPF Poly III [#COL]. Locate in storage pan.	$3,012
4100-0054	500 gallon "T" foam tank for class B foam. UPF Poly III Yellow fill tower. Foam tank capacity will reduce the water tank capacity. Tank capacity is 500 US gallons / 416 Imperial gallons / 1892 Liters.	$6,776
4110-0002	Foam tank (B) outlet. Includes 1" male adapter and connector (ship loose). Outlet location: [#LOC].	$856
4110-0004	Foam tank shutoff. 1/4 turn shut off on each connection to the foam tank - foam discharge, refill and sending unit. The Valves shall be located at the tank.	$669
4110-0005	Direct 1.5" Foam Tank Fill with Akron 1.5" Valve. A 1.5" FNST tank fill connection with rocker lug plug, and a replaceable .25" mesh strainer on the left pump panel.	$675
4110-0006	Foam tank outlet. Includes 1" male adaptor and connector (ship loose). Outlet location: [#LOC]	$855
4110-0009	TTP 4" WILLIAMS FOAM SINGLE	$8,940
4110-0011	1.5" Foam tank drain Akron manual valve.	$625
4110-0012	Williams Hot Shot II Single 3" Foam Tank To Pump Controls.	$7,267
4110-0013	Foam tank outlet. Includes 1.5" MNST with cap. A 1.5" FNST fitting shall be included in the loose equipment . Outlet location: [#LOC].	$937
4110-0014	Foam tank (B) outlet. Includes 2" male adapter. Outlet location: [#LOC].	$1,238
4110-0015	Foam tank outlet. Includes 1" Female adaptor and connector (ship loose). Outlet location: [#LOC].	$855
4405-0021	Booster reel - front bumper. Center between frame rails. Will hold 100' of 1" or 150' of 3/4" booster hose.	$5,639
4405-0026	Booster Reel Aluminum shall hold 100' of 1" or 150' of .75" Hose Reel installed in [#LOC] A rewind switch shall be provided at the reel.	$2,416
4405-0053	One (1) booster reel to hold 200` of .75" hose (not included)shall be provided. Includes rollers mounted on compartment door and foot mounted rewind switch below forward area of compartment. Locate R2.	$3,036
4405-0056	Booster reel to hold up to 200' of .75" or 100' of 1" hose. Locate over L1 on compartment top offset forward.	$2,983
4405-0060	Booster reel Akron Elect valve with a 9315 controller to read pressure only- Behind Front of Cab. Center between frame rails. To hold 100' of 1"	$5,833
4405-0061	Akron Booster reel - front bumper. Center between frame rails. Will hold 150' of 1" or 250' of 3/4" booster hose.	$6,028
4405-0076	Booster Reel to hold up to 200' of .75" or 100' of 1" hose. Locate over R1 on compartment top offset forward.	$2,983
4405-0077	Booster Hose Reel 12 Volt. Shall hold 200' of .75" Booster Hose (Hose not included) Includes stirrup style rewind switch installed in [#LOC]	$2,432
4405-0090	Booster Reel with air actuated control at pump operator panel. Shall hold 200' of 1" Booster Hose (Hose not included) installed in [#LOC]	$2,324
4405-0095	Booster Hose Reel 12 Volt located on the floor of B1. Shall hold 200' of .75" Booster Hose (Hose not included). Includes rewind switch officers side of B1 wall close to opening for easy accessability.	$2,432
4405-0096	The booster reel manual crank shall have the crank handle extended an additional 12" beyond standard length.	$86
4405-0098	Booster Reel 100' X 1" less hose, blow out valve included, model EF4026-19-20-8. Located: [#LOC].	$2,428
4405-0100	Booster cord reel rewind switch. Switch located [#LOC].	$105
4415-0008	1.5" front bumper discharge Akron manual valve.	$1,408
4415-0009	1.5" Front Bumper Discharge Hale Manual Valve	$1,502
4415-0010	1.5" Front Bumper Discharge Akron Electric Valve	$2,905

4415-0011	2.5" Front Bumper Discharge Akron Electric Valve	$3,048
4415-0012	1.5" crosslay with Akron manual valve. Location: [#LOC].	$876
4415-0014	2.5" Left Pump Panel Discharge Akron Manual Valve. Location: [#LOC].	$912
4415-0015	2.5" Left Panel Discharge Hale Manual Valve. Location: [#LOC]	$1,188
4415-0016	2.5" Right Pump Panel Discharge Akron Manual Valve. Location: [#LOC].	$1,015
4415-0017	2.5" Right Pump Panel Discharge Hale Manual Valve. Location: [#LOC]	$1,288
4415-0018	2.5" left front hose bed discharge Akron manual valve.	$1,320
4415-0019	2.5" Left Front Hosebed Discharge Hale Manual Valve	$1,542
4415-0028	2.5" Right Rear Discharge Akron Manual Valve. Location: [#LOC].	$1,067
4415-0029	2.5" Right Rear Discharge Hale Manual Valve Location: [#LOC]	$1,288
4415-0034	3" Right Pump Panel Discharge Akron Manual Valve (Waterous pumps noted location to be forward lower port). Location: [#LOC].	$1,467
4415-0035	3" Right Pump Panel Discharge Hale Manual Valve Location: [#LOC]	$1,799
4415-0036	3" Left Front Hose Bed Discharge Akron Manual Valve.	$1,917
4415-0037	3" Right Front Hose Bed Discharge Akron Manual Valve.	$1,917
4415-0041	3" Deck Gun Discharge, Akron manual valve.	$1,496
4415-0049	4" Pump Panel Discharge Hale Electric Valve Location: [#LOC]	$5,173
4415-0050	4" Pump Panel Discharge Akron Electric Valve (Waterous pumps noted location to be forward lower port). [#LOC]	$4,192
4415-0051	4" Waterway Discharge with 3" Akron Manual Valve.	$2,033
4415-0052	4" Waterway Discharge with 4" Akron Electric Valve	$4,192
4415-0053	4" Waterway Discharge with 3" Akron Electric Valve	$3,505
4415-0054	4" Right Pump Panel Discharge with 3" Akron Manual Valve (Waterous pumps noted location to be forward lower port). Location: [#LOC].	$1,725
4415-0057	5" Right Pump Panel Discharge with 3" Akron Manual Valve. Location: [#LOC].	$2,393
4415-0058	2.5" Crosslay Akron Manual Valve. Location: [#LOC].	$1,056
4415-0065	1.5" Double Speedlay with Akron Manual Valves.	$1,718
4415-0067	1.5" left front hose bed preconnect Akron manual valve.	$912
4415-0072	1.5" Right Rear Discharge Akron Manual Valve. Location: [#LOC].	$963
4415-0073	Triple Speedlay (2) 1.5" and (1) 2.5" with Akron Manual Valve.	$3,848
4415-0085	1.5" Crosslay w/2" Akron Electric Valve Location: [#LOC]	$2,556
4415-0086	2.5" Crosslay w/Akron Electric Valve. To be located rearward of 1.5" crosslay(s) if applicable. Location: [#LOC].	$2,938
4415-0088	1.5" Crosslay w/2" Akron Electric Valve & Navigator 9305 Location: [#LOC]	$4,783
4415-0089	2.5" Crosslay w/Akron Electric Valve & Navigator 9305. To be located rearward of 1.5" crosslay(s) if applicable. Location: [#LOC]	$5,556
4415-0099	3" Deck Gun Discharge Akron Electric Valve	$3,445
4415-0100	3" Deck Gun Discharge Akron Electric Valve & Navigator 9305	$6,131
4415-0102	1.5" Front Bumper Discharge Akron Electric Valve & Navigator 9305	$5,336
4415-0104	2.5" Front Bumper Discharge Akron Electric Valve & Navigator 9305	$6,196
4415-0106	1.5" Left Front Hosebed w/2" Akron Electric Valve	$2,613
4415-0107	2.5" Left Front Hosebed Akron Electric Valve	$3,205
4415-0109	1.5" Left Front Hosebed w/2" Akron Electric Valve & Navigator 9305	$4,841
4415-0110	2.5" Left Front Hosebed Akron Electric Valve & Navigator 9305	$5,895
4415-0124	2.5" Left Pump Panel Discharge Akron Electric Valve. Location: [#LOC]	$2,797
4415-0125	2.5" Left Pump Panel Discharge Akron Electric Valve & Navigator 9305. Location: [#LOC]	$5,489
4415-0127	2.5" Right Pump Panel Discharge Akron Electric Valve Location: [#LOC]	$2,797
4415-0128	3" Right Pump Panel Discharge Akron Electric Valve (Waterous pumps noted location to be forward lower port) Location: [#LOC]	$3,419
4415-0129	4" Right Pump Panel Discharge w/3" Akron Electric Valve (Waterous pumps noted location to be forward lower port) Location: [#LOC]	$3,676
4415-0130	5" Right Pump Panel Discharge w/3" Akron Electric Valve Location: [#LOC]	$4,342
4415-0131	2.5" Right Pump Panel Discharge Akron Electric Valve & Navigator 9305 Location: [#LOC]	$5,489
4415-0132	3" Right Pump Panel Discharge Akron Electric Valve & Navigator 9305 (Waterous pumps noted location to be forward lower port) Location: [#LOC]	$6,100
4415-0133	4" Pump Panel Discharge Akron Electric Valve & Navigator 9305 Location: [#LOC]	$7,402
4415-0134	4" Right Pump Panel Discharge w/3" Akron Electric Valve & Navigator 9305 Location: [#LOC]	$6,359
4415-0135	5" Right Pump Panel Discharge w/3" Akron Electric Valve & Navigator 9305 Location: [#LOC]	$7,027
4415-0149	1.5" Right Rear Discharge Akron Electric Valve Location: [#LOC]	$2,664
4415-0150	2.5" Right Rear Discharge Akron Electric Valve Location: [#LOC]	$2,953
4415-0152	1.5" Right Rear Discharge Akron Electric Valve & Navigator 9305 Location: [#LOC]	$4,893
4415-0153	2.5" Right Rear Discharge Akron Electric Valve & Navigator 9305 Location: [#LOC]	$5,642
4415-0161	2.5" Left Panel Discharge Akron Manual Valve w/30 Degree Droop. Location: [#LOC].	$1,147
4415-0162	2.5" Left Panel Discharge Akron Electric Valve w/30 Degree Droop. Location: [#LOC].	$3,034
4415-0163	2.5" Left Panel Dishcarge Akron Electric Valve & Navigator 9305 w/30 Degree Droop Location: [#LOC]	$5,724

4415-0164	2.5" Right Panel Discharge Akron Manual Valve w/30 Degree Droop. Location: [#LOC].	$1,147
4415-0165	3" Right Panel Discharge Akron Manual Valve w/30 Degree Droop. (Waterous pumps noted if location is forward of steamer use lower discharge port.) Location: [#LOC].	$1,752
4415-0166	2.5" Right Panel Discharge Akron Electric Valve w/30 Degree Droop Location: [#LOC]	$3,034
4415-0167	3" Right Panel Discharge Akron Electric Valve w/30 Degree Droop (Waterous pumps noted location to be forward lower port) Location: [#LOC]	$3,702
4415-0168	2.5" Right Panel Discharge Akron Electric Valve & Navigator 9305 w/30 Degree Droop Location: [#LOC]	$5,724
4415-0169	3" Right Panel Discharge Akron Electric Valve & Navigator 9305 w/30 Degree Droop (Waterous pumps noted location to be forward lower port) Location: [#LOC]	$6,387
4415-0171	3" Auxillary Waterway Discharge Akron Manual Valve. Plumbed from foam manifold and "Y" into w/way pipe downstream from main w/way discharge valve.	$1,091
4415-0172	2.5" Auxillary Waterway Discharge Akron Manual Valve. Plumbed from foam manifold and "Y" into w/way pipe downstream from main w/way discharge valve.	$1,027
4415-0179	2.5" Auxiliary Deck Gun Discharge Akron Valve for use with CAFS System.Plumbed from foam manifold and "Y" into Deck Gun pipe downstream from main Deck Gun discharge valve.	$1,777
4415-0180	2.5" Auxillary Waterway Discharge Hale Manual Valve. Plumbed from foam manifold and "Y" into w/way pipe downstream from main w/way discharge valve.	$1,255
4415-0181	3" Auxillary waterway discharge Hale Manual Valve. Plumbed from foam manifold and "Y" into w/way pipe downstream from main w/way discharge valve.	$1,279
4415-0184	3" Deck Gun Discharge Hale Manual Valve	$1,680
4415-0187	1.5" Crosslay with Hale Manual Valve Location: [#LOC]	$1,688
4415-0189	2.5" Crosslay with Hale Manual Valve Location: [#LOC]	$2,277
4415-0192	4" Waterway Discharge with 3" Hale Manual Valve	$2,370
4415-0194	2.5" front bumper discharge Akron manual valve.	$1,618
4415-0195	4" Right Pump Panel Discharge with 3" Hale Manual Valve Location: [#LOC]	$2,060
4415-0196	5" Right Pump Panel Discharge with 3" Hale Manual Valve Location: [#LOC]	$2,729
4415-0197	2.5" Left Panel Discharge Hale Manual Valve with Droop. Location: [#LOC]	$1,421
4415-0198	2.5" Right Pump Panel Discharge Hale Manual Valve with droop. Location: [#LOC]	$1,520
4415-0199	3" Right Pump Panel Discharge Hale Manual Valve with Droop Location: [#LOC]	$2,079
4415-0204	1.5" Crosslay with Hale Electric Valve Location: [#LOC]	$3,044
4415-0205	2.5" Crosslay with Hale Electric Valve Location: [#LOC]	$3,753
4415-0209	3" Deck Gun Discharge Hale Electric Valve	$3,708
4415-0210	2.5" Auxiliary Deck Gun Discharge Hale Valve for use with CAFS System	$3,806
4415-0211	2.5" Front Bumper Discharge Hale Manual Valve	$1,667
4415-0212	1.5" Front Bumper Discharge Hale Electric Valve	$2,858
4415-0213	2.5" Front Bumper Discharge Hale Electric Valve	$3,144
4415-0214	1.5" Left Front Hosebed Discharge Hale Manual Valve	$1,043
4415-0215	3" Left Front Hosebed Discharge Hale Manual Valve	$2,101
4415-0216	1.5" Left Front Hosebed Discharge Hale Electric Valve	$2,398
4415-0217	2.5" Left Front Hosebed Discharge Hale Electric Valve	$3,019
4415-0218	3" Left Front Hosebed Discharge Hale Electricl Valve	$4,127
4415-0227	2.5" Left Panel Discharge Hale Electric Valve. Location: [#LOC]	$2,664
4415-0228	2.5" Left Panel Discharge Hale Electric Valve with Droop. Location: [#LOC]	$2,896
4415-0232	2.5" Right Pump Panel Discharge Hale Electric Valve. Location: [#LOC]	$2,765
4415-0233	2.5" Right Pump Panel Discharge Hale Electric Valve with droop. Location: [#LOC]	$2,996
4415-0234	3" Right Pump Panel Discharge Hale Electric Valve Location: [#LOC]	$3,828
4415-0235	3" Right Pump Panel Discharge Hale Electric Valve with Droop Location: [#LOC]	$4,107
4415-0236	4" Right Pump Panel Discharge with 3" Hale Electric Valve Location: [#LOC]	$4,086
4415-0237	5" Right Pump Panel Discharge with 3" Hale Electric Valve Location: [#LOC]	$4,755
4415-0243	1.5" Right Rear Discharge Hale Manual Valve Location: [#LOC]	$1,058
4415-0244	3" Right Rear Discharge Hale Manual Valve Location: [#LOC]	$1,832
4415-0245	1.5" Right Rear Discharge Hale Electric Valve Location: [#LOC]	$2,414
4415-0246	2.5" Right Rear Discharge Hale Electric Valve Location: [#LOC]	$2,765
4415-0247	3" Right Rear Discharge Hale Electric Valve Location: [#LOC]	$3,860
4415-0248	1.5" Crosslay Elkhart Manual Valve Location: [#LOC].	$926
4415-0249	2.5" Crosslay Elkhart Manual Valve. To be located rearward of 1.5" crosslay(s) if applicable. Location: [#LOC]	$1,190
4415-0250	1.5" Crosslay w/2" Elkhart Electric Valve Location: [#LOC]	$2,049
4415-0251	2.5" Crosslay w/Elkhart Electric Valve. To be located rearward of 1.5" crosslay(s) if applicable. Location: [#LOC]	$2,502
4415-0258	4" Waterway Discharge with 3" Hale Electric Valve	$4,062
4415-0259	4" Waterway Discharge with 4" Hale Electric Valve	$5,137
4415-0260	4" Waterway Discharge with 3" Elkhart Manual Valve	$2,232
4415-0261	4" Waterway Discharge with 3" Elkhart Electric Valve	$3,521
4415-0262	4" Waterway Discharge with 4" Elkhart Electric Valve	$5,318

4415-0263	3" Auxillary Waterway Discharge Elkhart Manual Valve. Plumbed from foam manifold and "Y" into w/way pipe downstream from main w/way discharge valve.	$1,287
4415-0264	2.5" Auxillary Waterway Discharge Elkhart Manual Valve. Plumbed from foam manifold and "Y" into w/way pipe downstream from main w/way discharge valve.	$1,163
4415-0265	3" Deck Gun Discharge Elkhart Manual Valve w/RC-10 Controller.	$1,694
4415-0266	3" Deck Gun Discharge Elkhart Electric Valve	$2,982
4415-0267	2.5" Auxiliary Deck Gun Discharge Elkhart Valve for use with CAFS System	$1,913
4415-0268	1.5" Front Bumper Discharge Elkhart Manual Valve	$1,481
4415-0269	2.5" Front Bumper Discharge Elkhart Manual Valve	$1,754
4415-0270	1.5" Front Bumper Discharge Elkhart Electric Valve	$2,601
4415-0271	2.5" Front Bumper Discharge Elkhart Electric Valve	$3,065
4415-0272	1.5" Left Front Hosebed Preconnect Elkhart Manual Valve	$984
4415-0273	2.5" Left Front Hosebed Discharge Elkhart Manual Valve	$1,454
4415-0274	3" Left Front Hosebed Discharge Elkhart Manual Valve	$2,115
4415-0275	1.5" Left Front Hosebed w/2" Elkhart Electric Valve	$2,106
4415-0276	2.5" Left Front Hosebed Elkhart Electric Valve	$2,765
4415-0280	3" Right Front Hosebed Discharge Elkhart Manual Valve	$2,115
4415-0285	4" Pump Panel Discharge Elkhart Electric Valve (Waterous pumps noted location to be forward lower port) Location: [#LOC].	$4,373
4415-0286	5" Pump Panel Discharge with 4" Akron Electric Valve Location: [#LOC]	$4,778
4415-0287	5" Pump Panel Discharge with 4" Hale Electric Valve Location: [#LOC]	$5,724
4415-0288	5" Pump Panel Discharge with 4" Elkhart Electric Valve Location: [#LOC]	$4,960
4415-0289	2.5" Left Pump Panel Discharge Elkhart Manual Valve. Location: [#LOC]	$1,048
4415-0290	2.5" Left Panel Discharge Elkhart Manual Valve w/45 Degree Droop. Location: [#LOC].	$1,282
4415-0292	2.5" Left Pump Panel Discharge Elkhart Electric Valve. Location: [#LOC]	$2,359
4415-0293	2.5" Left Panel Discharge Elkhart Electric Valve w/45 Degree Droop Location: [#LOC]	$2,594
4415-0299	2.5" Right Pump Panel Discharge Elkhart Manual Valve. Location: [#LOC].	$1,147
4415-0300	2.5" Right Panel Discharge Elkhart Manual Valve w/45 Degree Droop. Location: [#LOC].	$1,282
4415-0301	3" Right Pump Panel Discharge Elkhart Manual Valve Location: [#LOC]	$1,665
4415-0302	4" Right Pump Panel Discharge with 3" Elkhart Manual Valve w/RC-10 Control w/lights. Location: [#LOC].	$1,922
4415-0303	5" Right Pump Panel Discharge with 3" Elkhart Manual Valve Location: [#LOC]	$2,589
4415-0304	2.5" Right Pump Panel Discharge Elkhart Electric Valve Location: [#LOC]	$2,460
4415-0305	2.5" Right Panel Discharge Elkhart Electric Valve w/45 Degree Droop Location: [#LOC]	$2,594
4415-0306	3" Right Pump Panel Discharge Elkhart Electric Valve Location: [#LOC]	$2,954
4415-0307	4" Right Pump Panel Discharge w/3" Elkhart Electric Valve (Waterous pumps noted location to be forward lower port) Location: [#LOC]	$3,213
4415-0308	5" Right Pump Panel Discharge w/3" Elkhart Electric Valve Location: [#LOC]	$3,878
4415-0315	1.5" Right Rear Discharge Elkhart Manual Valve Location: [#LOC]	$1,034
4415-0316	2.5" Right Rear Discharge Elkhart Manual Valve. Location: [#LOC].	$1,202
4415-0318	1.5" Right Rear Discharge Elkhart Electric Valve Location: [#LOC]	$2,156
4415-0319	2.5" Right Rear Discharge Elkhart Electric Valve Location: [#LOC]	$2,512
4415-0370	Second 1.5" Front Bumper Discharge Akron Manual Valve	$1,408
4415-0371	Second 1.5" Front Bumper Discharge Hale Manual Valve	$1,502
4415-0372	Second 1.5" Front Bumper Discharge Akron Electric Valve	$2,905
4415-0373	Second 2.5" Front Bumper Discharge Akron Electric Valve	$3,048
4415-0374	Second 1.5" Front Bumper Discharge Akron Electric Valve & Navigator 9305	$5,336
4415-0376	Second 2.5" Front Bumper Discharge Akron Electric Valve & Navigator 9305	$6,196
4415-0378	Second 2.5" Front Bumper Discharge Akron Manual Valve	$1,618
4415-0379	Second 2.5" Front Bumper Discharge Hale Manual Valve	$1,667
4415-0380	Second 1.5" Front Bumper Discharge Hale Electric Valve	$2,858
4415-0381	Second 2.5" Front Bumper Discharge Hale Electric Valve	$3,144
4415-0382	Second 1.5" Front Bumper Discharge Elkhart Manual Valve	$1,481
4415-0383	Second 2.5" Front Bumper Discharge Elkhart Manual Valve	$1,754
4415-0384	Second 1.5" Front Bumper Discharge Elkhart Electric Valve	$2,601
4415-0385	Second 2.5" Front Bumper Discharge Elkhart Electric Valve	$3,065
4415-0391	4" Deck Gun Discharge Akron Electric Valve.	$4,975
4415-0392	4" Deck Gun Discharge Hale Electric Valve	$5,892
4415-0393	4" Deck Gun Discharge Elkhart Electric Valve	$5,151
4415-0397	4" Officer side discharge. Foward of steamer and includes 30 degree droop, 4" Akron full flow valve with 4" driver side hand wheel control.	$3,448
4415-0399	1.5" Crosslay w/2" Akron Valve Handwheel Control Location: [#LOC]	$1,808
4415-0400	1.5" Crosslay w/2" Elkhart Valve Handwheel Control Location: [#LOC]	$1,853
4415-0401	2.5" Crosslay w/Akron Valve Handwheel Control. To be located rearward of 1.5" crosslay(s) if applicable. Location: [#LOC]	$1,986

4415-0402	2.5" Crosslay w/Elkhart Valve Handwheel Control. To be located rearward of 1.5" crosslay(s) if applicable. Location: [#LOC]	$2,031
4415-0403	3" Deck Gun Discharge Akron Valve Handwheel Control.	$2,426
4415-0404	3" Deck Gun Discharge Elkhart Valve Handwheel Control	$2,472
4415-0405	1.5" Front Bumper Discharge Akron Valve Handwheel Control	$2,340
4415-0406	1.5" Front Bumper Discharge Elkhart Valve Handwheel Control	$2,385
4415-0407	2.5" Front Bumper Discharge Akron Valve Handwheel Control	$2,549
4415-0408	2.5" Front Bumper Discharge Elkhart Valve Handwheel Control	$2,595
4415-0409	1.5" Left Front Hosebed Preconnect AkronValve Handwheel Control	$1,843
4415-0410	1.5" Left Front Hosebed Preconnect Elkhart Valve Handwheel Control	$1,889
4415-0411	2.5" Left Front Hosebed Discharge Akron Valve Handwheel Control	$2,250
4415-0412	2.5" Left Front Hosebed Discharge Elkhart Valve Handwheel Control	$2,294
4415-0413	3" Left Front Hosebed Discharge Akron Valve Handwheel Control	$2,848
4415-0414	3" Left Front Hosebed Discharge Elkhart Valve Handwheel Control	$2,892
4415-0419	3" Right Front Hosebed Discharge Akron Valve Handwheel Control	$2,848
4415-0420	3" Right Front Hosebed Discharge Elkhart Valve Handwheel Control	$2,892
4415-0421	4" Pump Panel Discharge Akron Valve Handwheel Control. (Waterous pumps noted location to be forward lower port.) Location: [#LOC].	$3,506
4415-0422	4" Pump Panel Discharge Elkhart Valve Handwheel Control. Location [#LOC]	$3,576
4415-0423	5" Right Pump Panel Discharge with 4" Akron Valve Handwheel Control	$4,095
4415-0424	5" Right Pump Panel Discharge with 4" Elkhart Valve Handwheel Control	$4,162
4415-0425	2.5" Right Pump Panel Discharge Akron Valve Handwheel Control. Location: [#LOC]	$1,946
4415-0426	2.5" Right Pump Panel Discharge Elkhart Valve Handwheel Control. Location: [#LOC]	$1,989
4415-0427	2.5" Right Panel Discharge Akron Valve Handwheel Control w/30 Degree Droop Location: [#LOC]	$2,078
4415-0428	2.5" Right Panel Discharge Elkhart Valve Handwheel Control w/30 Degree Droop Location: [#LOC]	$2,124
4415-0429	3" Right Pump Panel Discharge Akron Valve Handwheel Control (Waterous pumps noted location to be forward lower port). Location: [#LOC].	$2,398
4415-0430	3" Right Pump Panel Discharge Elkhart Valve Handwheel Control Location: [#LOC]	$2,442
4415-0431	3" Right Panel Discharge Akron Valve Handwheel Control w/Droop. Location:(Waterous pumps noted location to be forward lower port) [#LOC].	$2,684
4415-0432	4" Right Panel Discharge w/3" Akron Valve Handwheel Control. Location: [#LOC].	$2,656
4415-0433	4" Right Panel Dischargew/3" Elkhart Valve Handwheel Control Location: [#LOC]	$2,702
4415-0434	5" Right Pump Panel Discharge with 3" Akron Valve Handwheel Control Location: [#LOC]	$3,323
4415-0435	5" Right Pump Panel Discharge with 3" Elkhart Valve Handwheel Control Location: [#LOC]	$3,368
4415-0443	1.5" Right Rear Discharge Akron Valve Handwheel Control Location: [#LOC]	$1,893
4415-0444	1.5" Right Rear Discharge Elkhart Valve Handwheel Control Location: [#LOC]	$1,938
4415-0445	2.5" Right Rear Discharge Akron Valve Handwheel Control Location: [#LOC]	$1,998
4415-0446	2.5" Right Rear Discharge Elkhart Valve Handwheel Control Location: [#LOC]	$2,041
4415-0451	4" Waterway Discharge with 3" Akron Valve Handwheel Control.	$2,964
4415-0452	4" Waterway Discharge with 3" Elkhart Valve Handwheel Control	$3,009
4415-0453	4" Waterway Discharge Akron Valve Handwheel Control	$3,507
4415-0454	4" Waterway Discharge Elkhart Valve Handwheel Control	$3,577
4415-0455	Second 1.5" Front Bumper Discharge Akron Valve Handwheel Control	$2,340
4415-0456	Second 1.5" Front Bumper Discharge Elkhart Valve Handwheel Control	$2,385
4415-0457	Second 2.5" Front Bumper Discharge Akron Valve Handwheel Control	$2,549
4415-0458	Second 2.5" Front Bumper Discharge Elkhart Valve Handwheel Control	$2,595
4415-0474	1.5" Right Discharge Akron Valve in Runningboard Hose Tray, [#LOC].	$912
4415-0489	2.5" Auxillary Waterway Discharge Akron Elect Valve. Plumbed from foam manifold and "Y" into w/way pipe downstream from main w/way discharge valve.	$3,093
4415-0491	2.5" Left Panel Discharge Elkhart Manual UnibodyValve w/30 Degree Droop. Location: [#LOC].	$1,255
4415-0492	2.5" Right Panel Discharge Elkhart Manual UnibodyValve w/30 Degree Droop. Location: [#LOC].	$1,278
4415-0493	1.5" Crosslay w/2" Elkhart Unibody Manual Valve. Location: [#LOC].	$926
4415-0494	1.5" Crosslay w/2" Elkhart Unibody Electric Valve UBEC3 Location: [#LOC]	$4,501
4415-0495	2.5" Right Panel Discharge Elkhart Hand Wheel Control UnibodyValve w/30 Degree Droop Location: [#LOC]	$2,057
4415-0496	3" Deck Gun Discharge Elkhart Unibody Valve Handwheel Control	$2,386
4415-0497	4" Pump Discharge Elkhart Electric UBEC3 Valve Location: [#LOC]	$5,874
4415-0498	1.5" Right Rear Discharge Elkhart Electric UBEC3 Valve Location: [#LOC]	$4,366
4415-0499	2.5" Right Rear Discharge Elkhart Electric UBEC3 Valve Location: [#LOC]	$5,074
4415-0500	1.5" Front Bumper Discharge Elkhart Electric UBEC3 Valve	$4,630
4415-0502	1.5" Front Bumper Discharge Akron Manual Valve without Blowout	$1,408
4415-0504	2.5" Right Panel Discharge Elkhart Manual UnibodyValve Location: [#LOC]	$1,171
4415-0505	2.5" Left Panel Discharge Elkhart Manual UnibodyValve Location: [#LOC]	$1,146
4415-0506	2.5" Right Panel Discharge Elkhart Hand Wheel Control UnibodyValve Location: [#LOC]	$1,950

4415-0509	2.5" Auxillary Waterway Discharge Akron Hand Wheel Valve. Plumbed from foam manifold and "Y" into w/way pipe downstream from main w/way discharge valve.	$2,144
4415-0514	4" Officer side discharge. Foward of steamer and includes 30 degree droop, 4" Elkhart Elect Control full flow valve.	$4,530
4415-0515	Front jumpline swivel to be recess so WYE valve will clear rise lid and tray.	$148
4415-0516	4" Right Panel Discharge w/ 3" Akron Valve Handwheel Control w/Droop Location: [#LOC]	$2,949
4415-0517	4" Right Pump Panel Discharge with 3" Akron Manual Valve w/Droop. Location: [#LOC].	$2,012
4415-0518	4" Right Panel Discharge w/ 3" Akron Valve Electric w/Droop (Waterous pumps noted location to be forward lower port) Location: [#LOC]	$3,963
4415-0519	4" Right Pump Panel Discharge w/3" Akron Electric Valve & Navigator 9305 with 30 Degree Droop Location: [#LOC]	$6,646
4415-0520	4" Right Pump Panel Discharge with 3" Hale Manual Valve with 30 Degree Droop Location: [#LOC]	$2,345
4415-0521	4" Right Pump Panel Discharge with 3" Hale Electric Valve with 30 Degree Droop Location: [#LOC]	$4,373
4415-0523	5" Right Panel Discharge w/4" Elkhart Electric UBEC3 Valve Location: [#LOC]	$6,132
4415-0524	3" Deck Gun Discharge Elkhart Unibody Manual Valve.	$1,687
4415-0525	1.5" Front Bumper Discharge Elkhart Unibody Manual Valve.	$1,481
4415-0527	1.5" Crosslay w/2" Elkhart Electric Unibody UBEC1 Valve Location: [#LOC]	$2,556
4415-0528	2.5" Left Pump Panel Discharge Elkhart Unibody Electric Valve. Location: [#LOC]	$2,797
4415-0529	3" Right Pump Panel Discharge Elkhart Unibody Electric Valve Location: [#LOC]	$3,419
4415-0530	4" Pump Panel Discharge Elkhart UBEC1 Electric Valve (Waterous pumps noted location to be forward lower port). Location: [#LOC].	$4,192
4415-0531	4" Pump Panel Discharge Akron Electric Valve with 30 Degree Droop (Waterous pumps noted location to be forward lower port) Location: [#LOC]	$4,463
4415-0532	4" Waterway Discharge with 4" Elkhart Unibody Electric Valve	$4,192
4415-0536	5" Right Pump Panel Discharge with 4" Akron Valve Handwheel Control. Location: [#LOC].	$3,522
4415-0537	2.5" Crosslay Elkhart Unibody Manual Valve. To be located rearward of 1.5" crosslay(s) if applicable. Location: [#LOC]	$1,243
4415-0541	3" Deck Gun Discharge Elkhart Unibody Manual Valve.	$1,591
4415-0542	Second 1.5" Front Bumper Discharge Elkhart Unibody Manual Valve	$1,481
4415-0545	5" Pump Panel Discharge with 4" Elkhart UBEC1 Electric Valve Location: [#LOC]	$4,960
4415-0546	4" Waterway Discharge with 3" Elkhart Unibody Valve Handwheel Control	$3,009
4415-0547	2.5" Front Bumper Discharge Elkhart Unibody Manual Valve	$1,754
4415-0548	3" Auxillary Waterway Discharge Elkhart Unibody Manual Valve. Plumbed from foam manifold and "Y" into w/way pipe downstream from main w/way discharge valve.	$1,082
4415-0549	1.5" Front Bumper Discharge Elkhart Electric UBEC1 Valve	$2,991
4415-0552	1.5" Front Bumper Crosslay Discharge Akron Manual Valve.	$1,977
4415-0553	2.5" Left Front Hosebed Discharge Akron Manual Valve located outlet shall be located 13.625" from inside hosebed wall.	$1,320
4415-0555	3" Deck Gun Discharge Akron Manual Valve with no Plumbing from the valve to deck gun channel Dealer to install Extend-A-Gun and Plumbing from the valve to the channel..	$1,389
4415-0556	4" Waterway Discharge with 4" Akron Electric Valve & Navigator 9305 Control	$7,016
4415-0559	5" Right Pump Panel Discharge with 4" Elkhart Unibody Valve Handwheel Control Location: [#LOC]	$3,753
4415-0561	2.5" Left Panel Discharge Akron Electric Valve w/30 Degree Droop Location: [#LOC]	$3,034
4415-0562	3" Right Pump Panel Discharge Akron Electric Valve w/30degree Droop (Waterous pumps noted location to be forward lower port) Location: [#LOC]	$3,575
4415-0563	2.5" Right Panel Discharge Akron Electric Valve w/30 Degree Droop Location: [#LOC]	$3,034
4415-0564	3" Right Pump Panel Discharge Elkhart Electric Valve w/30degree Droop Location: [#LOC]	$3,575
4415-0565	4" Waterway Discharge with 5" Elkhart Electric Valve	$5,420
4415-0566	1.5" crosslay w/2" Akron electric valve. Location: [#LOC].	$2,556
4415-0567	2.5" Crosslay w/Akron Electric Valve. To be located rearward of 1.5" crosslay(s) if applicable. Location: [#LOC].	$2,938
4415-0568	3" deck gun discharge Akron electric valve.	$3,445
4415-0569	4" deck gun discharge Akron electric valve.	$4,975
4415-0570	1.5" Front Bumper Discharge Akron Electric Valve	$2,905
4415-0571	Second 1.5" Front Bumper Discharge Akron Electric Valve	$2,905
4415-0572	2.5" Front Bumper Discharge Akron Electric Valve	$3,048
4415-0573	Second 2.5" Front Bumper Discharge Akron Electric Valve	$3,048
4415-0574	2.5" Left Pump Panel Discharge Akron Electric Valve. Location: [#LOC].	$2,797
4415-0575	2.5" Left Panel Discharge Akron Electric Valve w/30 Degree Droop. Location: [#LOC].	$2,797
4415-0576	4" Pump Panel Discharge Akron Electric Valve. (Waterous pumps noted location to be forward lower port.) Location: [#LOC].	$4,192
4415-0577	5" Pump Panel Discharge with 4" Akron Electric Valve. Location: [#LOC].	$4,778
4415-0582	1.5" Right Rear Discharge Akron Electric Valve Location: [#LOC]	$2,664

4415-0583	2.5" Right Rear Discharge Akron Electric Valve Location: [#LOC]	$2,953
4415-0586	2.5" Right Pump Panel Discharge Akron Electric Valve. Location: [#LOC].	$2,797
4415-0587	3" Right Pump Panel Discharge Akron Electric Valve. Location: [#LOC].	$3,419
4415-0588	4" Right Pump Panel Discharge w/3" Akron Electric Valve (Waterous pumps noted location to be forward lower port) Location: [#LOC]	$3,676
4415-0589	5" Right Pump Panel Discharge w/3" Akron Electric Valve. Location: [#LOC].	$4,342
4415-0590	2.5" Right Panel Discharge Akron Electric Valve w/30 Degree Droop. Location: [#LOC].	$3,034
4415-0591	3" Right Panel Discharge Akron Electric Valve w/30 Degree Droop (Waterous pumps noted location to be forward lower port). Location: [#LOC].	$3,702
4415-0592	4" Right Panel Discharge w/ 3" Akron valve electric w/droop (Waterous pumps noted location to be forward lower port). Location: [#LOC].	$3,963
4415-0593	3" Right Pump Panel Discharge Akron Electric Valve w/30degree Droop (Waterous pumps noted location to be forward lower port) Location: [#LOC]	$3,575
4415-0594	2.5" Right Panel Discharge Akron Electric Valve w/30 Degree Droop Location: [#LOC]	$3,034
4415-0595	1.5" Left Front Hosebed w/2" Akron Electric Valve	$2,613
4415-0596	2.5" Left Front Hosebed Akron Electric Valve	$3,205
4415-0601	1.5" Crosslay w/2" Akron Electric Valve Location: [#LOC]	$2,556
4415-0612	4" waterway discharge with 3" Akron electric valve.	$3,505
4415-0613	4" waterway discharge with 4" Akron electric valve.	$4,192
4415-0617	2.5" Left Panel Discharge Akron Manual 3" Valve w/30 Degree Droop Location: [#LOC]	$1,467
4415-0618	2.5" Auxillary Deck Gun Discharge Manual Valve. Plumbed from foam manifold and "Y" into Deck Gun pipe downstream from main Deck Gun discharge valve.	$1,027
4415-0619	4" Right Pump Panel Discharge with 3" Akron Manual Valve. The 4" NST threads shall be a integral part of the valve. (Waterous pumps noted location to be forward lower port.) Location: [#LOC].	$1,725
4415-0621	3" Left Front Hosebed Discharge Elkhart Unibody Manual Valve	$2,115
4415-0622	3" Right Front Hosebed Discharge Elkhart Unibody Manual Valve	$2,115
4415-0627	3" Deck Gun Discharge Elkhart Electric Unibody UBEC3Valve	$5,274
4415-0628	5" Pump Panel Discharge Elkhart Electric UBEC3 Valve Location; [#LOC]	$5,527
4415-0629	2.5" Right Rear Discharge Elkhart Unibody Manual Valve Location: [#LOC]	$1,202
4415-0632	1.5" Left Front Hose Bed Preconnect Elkhart Unibody Manual Valve.	$984
4415-0636	4" Right Pump Panel Discharge with 3" Elkhart Unibody Manual Valve. (Waterous pumps noted location to be forward lower port.) Location: [#LOC].	$1,922
4415-0651	4" Waterway Discharge with 4" Akron Electric Valve with Digital Flow Meter.	$5,029
4415-0659	2.5" Left Pump Panel Discharge Elkhart Unibody Electric Valve with Droop. Location: [#LOC]	$2,913
4415-0660	2.5" Right Panel Discharge Elkhart Unibody Electric Valve w/Droop Location: [#LOC]	$2,912
4415-0661	4" Right Pump Panel Discharge w/3" Elkhart Electric Unibody Valve (Waterous pumps noted location to be forward lower port) Location: [#LOC]	$3,301
4415-0662	3" Deck Gun Discharge Elkhart Electric Unibody Valve	$3,445
4415-0665	1.5" Front Bumper Discharge Akron Electric Valve & Navigator 9315	$5,336
4415-0667	2.5" Left Panel Dishcarge Akron Electric Valve & Navigator 9315 w/30 Degree Droop Location: [#LOC]	$5,148
4415-0668	2.5" Right Panel Discharge Akron Electric Valve & Navigator 9315 w/30 Degree Droop Location: [#LOC]	$5,148
4415-0670	3" Right Panel Discharge Akron Electric Valve & Navigator 9315 w/30 Degree Droop (Waterous pumps noted location to be forward lower port) Location: [#LOC]	$5,999
4415-0719	3" Deck Gun Discharge Akron Electric Valve & Navigator 9315	$6,131
4415-0720	4" Right Pump Panel Discharge w/3" Akron Electric Valve & Navigator 9315 (Waterous pumps noted location to be forward lower port) Location: [#LOC]	$6,359
4415-0722	3" Deck Gun Discharge Akron Electric Valve with a 9315 valve controller with pressure reading only. [#LOC]	$3,834
4415-0723	4" Pump Panel Discharge Akron Electric Valve & Navigator 9315 (Waterous pumps noted location to be forward lower port). Location: [#LOC].	$7,402
4415-0724	4" Rear Mount Discharge w/3" Akron 9315 Electric Valve to read Flow and Pressure with 30 degree droop (Waterous pumps noted location to be forward lower port) Location: [#LOC]	$6,359
4415-0725	4" Rear Mount Discharge w/3" Akron 9315 Electric Valve to read Pressure (Waterous pumps noted location to be forward lower port) Location: [#LOC]	$3,628
4415-0726	1.5" Front Bumper Discharge Akron Electric Valve & Navigator 9315 with Pressue Reading only.	$3,255
4415-0727	1.5" Crosslay w/2" Akron Electric Valve & Navigator 9315 to Read Pressure only Location: [#LOC]	$3,029
4415-0728	2.5" Rear Mount Discharge Akron Electric Valve & Navigator 9315 to Read Pressure only. Location: [#LOC]	$3,177
4415-0730	2.5" Left Rear Discharge UBEC3 Electric Valve Location: [#LOC]	$5,074
4415-0731	2.5" Left Pump Panel Discharge UBEC3 Electric Valve with 30 degree droop Location: [#LOC]	$5,044
4415-0732	2.5" Right Pump Panel Discharge UBEC3 Electric Valve with 30 degree droop Location: [#LOC]	$5,044
4415-0733	4.5" Right Pump Panel Discharge with 3" Akron Manual Valve w/Droop Location: right side discharge 1 [#LOC]	$2,187

4415-0739	3" Right Pump Panel Discharge Elkhart Electric Valve w/30degree Droop to Terminate with 2.5" MNST w/cap Location: [#LOC]	$3,575
4415-0744	2.5" Crosslay w/2.5" Akron Electric Valve & Navigator 9315 to Read Pressure only Location: [#LOC]	$3,511
4415-0745	2.5" Left Panel Discharge Akron Electric 9315 Navigator Valve w/30 Degree Droop to Read Pressure only Location: [#LOC]	$3,487
4415-0746	2.5" Right Panel Discharge Akron Electric 9315 Navigator Valve w/30 Degree Droop to Read Pressure only Location: [#LOC]	$3,487
4415-0747	4" Pump Panel Discharge Akron Electric Navigator 9315 Valve (Read Pressure only) Location: [#LOC]	$4,590
4415-0748	4" Waterway Discharge with 4" Akron Electric Navigator 9315 Valve (Read Pressure only)	$4,561
4415-0751	2.5" Crosslay Elkhart UBEC3 Electric Valve. To be located rearward of 1.5" crosslay(s) if applicable. Location: [#LOC]	$4,930
4415-0752	4" Waterway Discharge with 4" Elkhart UBEC3 Valve.	$6,570
4415-0757	1.5" Front Bumper Discharge Elkhart Electric UBEC3 Valve	$4,848
4415-0758	Left Front Hosebed Discharge 2.5" Elkhart Unibody UBEC3 Valve.	$5,009
4415-0759	Right Front Hosebed Discharge 2.5" Elkhart Unibody UBEC3 Valve.	$5,009
4415-0760	2.5" Front Bumper Discharge Akron Manual Valve without Blowout.	$1,618
4415-0762	4" Pump Panel Discharge Akron Electric Valve with 30 Degree Droop. Location: [#LOC].	$4,463
4415-0767	2.5" Right Panel Discharge Akron Manual 3" Valve w/30 Degree Droop Location: [#LOC]	$1,467
4415-0768	2.5" Crosslay w/Akron Electric Valve & Navigator 9315. To be located rearward of 1.5" crosslay(s) if applicable. Location: [#LOC]	$5,556
4415-0771	4" Deck Gun Discharge Akron Electric Valve & Navigator 9315	$6,216
4415-0772	4" Deck Gun Discharge Elkhart Electric Unibody Valve	$5,151
4415-0773	2.5" Right Pump Panel Discharge w/3" Elkhart Electric Unibody Valve and 30degree Droop [#LOC]	$3,575
4415-0776	2.5" Left Pump Panel Discharge w/3" Elkhart Electric Unibody Valve and 30degree Droop [#LOC]	$3,575
4415-0777	2.5" Left Panel Discharge 3" Akron Electric 9315 Navigator Valve w/30 Degree Droop to Read Pressure and Flow Location: [#LOC]	$5,177
4415-0778	2.5" Crosslay w/Akron 3" Electric Valve & Navigator 9315 include 3" plumbing. To be located rearward of 1.5" crosslay(s) if applicable. Location: [#LOC]	$5,750
4415-0781	3" Right Pump Panel Discharge UBEC3 Electric Valve with 30 degree droop Location: [#LOC]	$5,999
4415-0805	5" Left Pump Panel Discharge W/4" Akron Electric Navigator 9315 valve and controller. Include valve position display pressure and flow meter. [#LOC]	$7,473
4415-0806	5" Right Pump Panel Discharge W/4" Akron Electric Navigator 9315 valve and controller. Include valve position display pressure and flow meter. [#LOC]	$7,473
4415-0812	Elkhart 2.5" foam system discharge with swing handle. For use with Williams Advent or Hot Shot foam systems. Locate to [#LOC].	$1,010
4415-0834	4" Deck Gun Discharge Outlet with 6" Electric Elkhart Valve and plumbing. Require 4" Monitor	$5,471
4415-0842	5" Right Side Discharge 5" Elkhart Electric Valve. Locate: [#LOC]	$4,819
4415-0847	Akron 635 Swivel with turning vane Located on Top of Bumper officer's side of center tray for Front Bumper Discharge	$152
4415-0849	5" Pump Panel Discharge 4" Akron Electric Valve & Navigator 9315 (Waterous pumps noted location to be forward lower port) Location: [#LOC]	$7,047
4415-0854	3" Left Rear Discharge Elkhart Electric Unibody Valve Location: [#LOC]	$3,101
4415-0855	3" Right Rear Discharge Elkhart Electric Unibody Valve Location: [#LOC]	$3,101
4415-0877	2.5" Crosslay Elkhart UBEC1 Electric Valve. To be located rearward of 1.5" crosslay(s) if applicable. Location: [#LOC]	$2,502
4415-0878	2.5" Right Panel Discharge Elkhart Unibody Electric Valve. Location: [#LOC]	$2,814
4415-0880	2.5" Left Panel Discharge Elkhart Unibody Manual 3" Valve w/30 Degree Droop Location: [#LOC]	$1,467
4415-0881	2.5" Right Panel Discharge Elkhart Unibody Manual 3" Valve w/30 Degree Droop Location: [#LOC]	$1,467
4415-0888	2.5" Left Pump Panel Discharge UBEC3 Electric Valve Location: [#LOC]	$4,584
4415-0889	2.5" Front Bumper Discharge Elkhart Electric UBEC3 Valve.	$5,039
4415-0892	3" Front Bumper Discharge Akron Manual Valve. Location; 3" front bumper discharge piped through the center of the center front bumper tray and to come out thru the front bumper. Piping to have a cover plate in tray.	$3,334
4415-0897	2.5" Right Rear Discharge Elkhart Electric Unibody Valve Location: [#LOC]	$2,511
4415-0898	2.5" Left Rear Discharge Elkhart Unibody Electric Valve Location: [#LOC]	$2,797
4415-0903	1.5" Front Bumper Crosslay Discharge Akron Manual Valve	$2,071
4415-0904	2" front bumper discharge Elkhart Electric valve. Include Elkhart electric valve, plumbing, and harness from the valve to joystick control located in cab console. Discharge to terminate and capped off just below the center of the bumper for dealer supplied and installed joystick, and bumper turret.	$2,172

4415-0908	2.5" Rear Mount Discharge Akron Electric Valve & Navigator 9315 to Read Pressure only w/30 Degree Droop. Location: [#LOC]	$3,286
4415-0909	4" Waterway Discharge with 4" Akron Electric Valve & Navigator 9315 Control. (Waterway valve override must be accessible through right side pump panel from standing on the ground).	$7,016
4415-0910	2.5" hose bed discharge Akron manual valve [#LOC].	$1,320
4415-0912	Second Left Front Hosebed 3" Elkhart Unibody manual Valve	$2,114
4415-0915	6" Waterway Discharge with 6" Akron Electric Valve.	$5,455
4415-0916	4" Deck Gun Discharge Akron Valve Handwheel Control.	$4,116
4415-0918	1.5" Front Bumper Crosslay Discharge Elkhart Unibody Manual Valve	$1,977
4415-0919	Deck gun monitor 3" Gemini manual hand wheel model 34700011 and nozzle 2.5" NH Excel model 51471000.	$3,123
4415-0920	Left Front Hosebed Discharge 2.5" Elkhart Unibody UBEC1 Valve.	$2,764
4415-0921	Right Front Hosebed Discharge 2.5" Elkhart Unibody UBEC1 Valve.	$2,764
4415-0923	4" Right Pump Panel Discharge with 3" Akron Manual Valve. Include a 4"FNST swivel x 4"MNST 30 degree droop adapter, and cap. Location: [#LOC].	$2,012
4415-0925	All Discharge/Intake caps, and plug to be Kochek brand and Powder coated. Color; White.	$535
4415-0931	2.5" Front Bumper Discharge Akron Electric Valve & Navigator Pro Controller 9325 with pressure read out.	$3,694
4415-0933	2.5" Right Panel Discharge Akron Electric Valve & Navigator Pro 9325 controller w/30 Degree Droop to Read Pressure. Location: [#LOC]	$3,680
4415-0934	2.5" Left Panel Discharge Akron Electric Valve & Navigator Pro 9325 controller w/30 Degree Droop to Read Pressure. Location: [#LOC]	$3,449
4415-0935	4" Right Pump Panel Discharge w/3" Akron Electric Valve & Navigator Pro 9325 with Pressure read out. (Waterous pumps noted location to be forward lower port) Location: [#LOC]	$4,586
4415-0936	4" Pump Panel Discharge Akron Electric Valve & Navigator 9325 w/30 degree droop. (Waterous pumps noted location to be forward lower port). Location: [#LOC].	$5,297
4415-0937	3" Deck Gun Discharge Akron Electric Valve & Navigator read flow, and pressure wiht 9325 controller.	$4,724
4415-0938	2.5" Left Pump Panel Discharge Akron Manual Valve. w/Chrome plated valve face. Location: [#LOC].	$1,030
4415-0939	2.5" Right Pump Panel Discharge Akron Manual Valve. w/Chrome plated valve face. Location: [#LOC].	$1,030
4415-0940	3" Right Pump Panel Discharge Akron Manual Valve w/Chrome Plated valve face (Waterous pumps noted location to be forward lower port). Location: [#LOC].	$1,584
4415-0941	4" Right Pump Panel Storz Discharge with 3" Akron Manual Valve. Include 3" FNST X 4" Storz 30 degree elbow adapter with cap. (Waterous pumps noted location to be forward lower port). Location: [#LOC].	$2,199
4415-0942	Left Rear Discharge 2.5" Elkhart Unibody electric valve with UICS-2 CAFS Controller.	$3,920
4415-0943	3" Deck Gun Discharge Akron Electric Valve & Navigator with 9323 controller.	$3,462
4415-0944	3" Right Panel Discharge Akron Electric Valve & Navigator 9325 w/30 Degree Droop (Waterous pumps noted location to be forward lower port) Location: [#LOC]	$4,693
4417-0019	Fire Shop Bezel Chrome - Side Discharge/Intake	$86
4417-0021	Deck Gun Remote Ext-a-Gun 4"	$4,112
4417-0026	Automatic drain valve. For: [#LOC].	$72
4417-0030	Monitor Akron 3578 Elec 2000	$8,915
4417-0031	Monitor Akron 3570 Manual 2000	$3,268
4417-0032	Monitor Scorpion wireless RF radio 2000 GPM	$10,005
4417-0038	Elkhart Model 8294-06 Monitor with SM-200E Nozzle. Wireless Remote control	$12,717
4417-0039	Akron DeckMaster 3440 electric 1250 GPM monitor w/stow.	$10,386
4417-0040	Akron 5177 Akromatic 2.5" master stream nozzle for an Akron 3440 DeckMaster monitor.	$1,586
4417-0041	Akron 1577 SaberMaster 2.5" Nozzle for an Akron 3440 DeckMaster monitor.	$3,032
4417-0042	An Akron tether remote control kit with a 30` cable shall be provided for an Akron 3440 monitor. Plug for the remote control to be located: [#LOC].	$1,006
4417-0043	Task Force Hurricane RC electric 1250 GPM monitor.	$11,694
4417-0044	Task Force M-ERP-NJ 2.5" master stream electric nozzle for a Hurricane RC monitor.	$1,754
4417-0045	Elkhart Stinger 8297-25 Manual 800gpm Monitor w/portable base and adapter to mount to deck gun discharge or extend-a-gun	$2,899
4417-0046	Elkhart 8500 Vulcan RF monitor with panel mounted and hand-held remote controls w/adapter to mount to deck gun discharge or extender.	$5,780
4417-0047	Elkhart SM-1250E Select-O-Matic 2.5" electric nozzle.	$2,194
4417-0048	Elkhart 8598 Electrically Actuated Extender.	$2,624
4417-0051	Thread Type: All 1.5" discharges to be NPSH threads. All 2.5" inlets and discharges to be CSA (Ontario) threads as an integral part of the valve.	$574
4417-0052	Extend Specified Hosebed Preconnect up to top of hosebed. Top of preconnect to be below top of hosebed. Location: [#LOC]	$365

4417-0054	Preconnect extension (Each). The front hosebed preconnect to be extended to the rear of the hosebed area. Includes smooth plate cover. Location: [#LOC]	$364
4417-0057	Ferrell Compression Fittings for all Discharge and Intake Bleeder Lines	$553
4417-0059	Extend Specified Hosebed Preconnect up to mid-point of hosebed. Center of preconnect to be approximately center of hosebed height. Location: [#LOC]	$275
4417-0067	Monitor 4" TFT Monsoon Manual with TFT Master Stream 2000 gpm manual Nozzle.	$5,830
4417-0068	TFT Tether Kit with 30' Cable for an TFT Monitor Location: [#LOC]	$699
4417-0075	Monitor 4" TFT Monsoon Electric with TFT Master Stream 2000 gpm electric Nozzle. Include panel mount and hand held Remote.	$13,167
4417-0077	Adapter 3"FNST x 3.5" MNST with Cap.	$214
4417-0078	Thread Type: All 1.5" discharges to be NPSH threads. All 2.5" inlets and discharges to be (Western Canada Fire Underwriters Association) threads as an integral part of the valve.	$746
4417-0079	9304 Akron Navitgator electric valve control. Location: All electric discharge valves IPOS.	$541
4417-0080	All 1.5" Threads to be IPT threads	$62
4417-0081	Vented caps and plugs for all discharges/intakes.	$525
4417-0083	Elkhart 8297F Stinger RF Monitor with Panel Mounted and Hand-Held Remote Controls w/adapter to mount to deck gun discharge or extender	$8,226
4417-0084	Task Force M-ERP-NJ 2.5" Masterstream Electric Nozzle for a Hurricane RC Monitor	$1,754
4417-0085	Thread Type: All 1.5" discharges to be NPSH threads.	$287
4417-0086	Task Force Typhoon RC Electric Monitor with 1500gpm nozzle. Include Radio Remote Control	$12,325
4417-0088	Bleeder drain valve plumbed to: [#LOC].	$104
4417-0090	Additional control for deck gun electric valve locate adjacent to the outlet.	$1,561
4417-0092	Task Force Typhoon RC Electric Monitor without nozzle. Include Radio Remote Control (Require Nozzle)	$9,892
4417-0099	Akron Wireless Deck Gun Remote Monitor Controller.	$1,441
4417-0100	Akron 3600 Wireless Remote Control.	$1,546
4417-0102	Akron DeckMaster 3440 Electric 1250gpm Monitor w/Stow. With 30' Tether controller located in pump panel operator compartment.	$10,927
4417-0118	Discharge Elbow 3" 45Deg 3"FNPT X 2.5"MNST with cap. Location on rear discharge IPOS.	$173
4417-0119	Task Force Hurricane RC Electric Monitor with a Master Stream 1250gpm nozzle. Include wireless Radio Remote Control.	$10,946
4417-0120	Adapter Chrome Reducer 2.5"FNST x 1.5"MNST w/Cap. [#LOC].	$86
4417-0127	Chrome discharge elbow 3"FNST x 2.5"MNST 30 Deg [#LOC].	$229
4417-0129	Left side 2.5" pump panel discharges on Waterous pump to be side by side. For use with Side Mount Pump Module.	$730
4417-0130	Task Force Hurricane XFI-PLNJ Manaul Monitor with MST-4NJ-2.5"NH Quad Stack Tips and M-R1000-NJ Automatic Nozzle.	$3,315
4417-0135	Addition Automatic drain valve. For: front bumper discharge. Loction under front bumper at lowest point.	$72
4417-0138	Officer side pump panel shall have polished stainless steel split escutcheon plates mounted in place for each discharge/intake. The escutcheon plates will be fastened in place to allow quick disassembly to permit the hinge to operate.	$218
4430-0008	Advent 30 Foam System for a Single Foam Tank	$18,114
4430-0011	1600 Rockwood Around The Pump Foam System	$3,804
4430-0013	Williams 1500 Around-The-Pump foam system.	$6,454
4430-0014	Hale 2.1A FoamLogix foam system.	$6,411
4430-0015	Hale 3.3 FoamLogix foam system.	$13,621
4430-0016	5.0 Hale FoamLogix Foam System.	$15,355
4430-0017	400 Rockwood around the pump foam system.	$2,864
4430-0018	1600 Hypro/FoamPro foam system.	$7,436
4430-0019	2001 Hypro/FoamPro foam system.	$12,079
4430-0020	2002 Hypro/FoamPro foam system.	$15,396
4430-0022	Hot Shot II 150 Foam System	$46,420
4430-0028	Pneumax 140-P Compressed Air Foam System	$29,288
4430-0029	Pneumax 140-SP Silver Compressed Air Foam System.	$17,409
4430-0031	Eclipse Compressed Air Foam System 1000 GPM Manifold w/2002 FoamPro.	$71,866
4430-0032	CAFSPRO with 2.1 Foam Logix Compressed Air Foam System with 750gpm Manifold	$42,857
4430-0034	Pneumax 80-P PTO Platinum Compressed Air Foam System	$22,101
4430-0035	Pneumax 80-SP PTO Silver Compressed Air Foam System	$15,414
4430-0037	Pneumax 200-P Platinum Compressed Air Foam System	$33,978
4430-0038	Pneumax 200-SP Silver Compressed Air Foam System.	$19,106
4430-0039	Eclipse Compressed Air Foam System 500 GPM Manifold w/2001 FoamPro	$67,014
4430-0041	WATP 500 A/B Foam System Include 1.5" Foam pick up.	$8,827
4430-0042	Advent 12 Foam System for a Single Foam Tank	$17,927
4430-0043	Advent 12 Dual Foam System for Dual Foam Tanks	$19,681
4430-0045	95 GPM Akron Foam Eductor. Location: [#LOC].	$1,968

4430-0046	125 GPM Elkhart Foam Eductor Location: [#LOC]	$2,453
4430-0047	125 GPM Akron foam eductor. Location: [#LOC].	$2,248
4430-0048	95 GPM Elkhart Foam Eductor Location: [#LOC]	$2,239
4430-0052	CAFSPRO with 3.3 Foam Logix Compressed Air Foam System with 750gpm Manifold	$54,087
4430-0053	CAFSPRO with 5.0 Foam Logix Compressed Air Foam System with 750gpm Manifold	$55,007
4430-0056	125 GPM Elkhart Foam Eductor w/air actuated foam valve Location: [#LOC]	$2,962
4430-0057	125 GPM Akron Foam Eductor w/air actuated foam valve. Location: [#LOC].	$2,636
4430-0058	Hot Shift Clutch - Required with CAFS system	$2,683
4430-0059	Eclipse Compressed Air Foam System 500 GPM Manifold w/2002 FoamPro.	$70,331
4430-0060	CAFSPRO 5.0 Foam Logix Compressed Air Foam System with 1000 gpm manifold	$56,498
4430-0061	FoamPro 3012 foam system, hydraulics PTO driven.	$20,486
4430-0066	Foam Tank To Pump 1" Air/Act for Dealer install foam system.	$750
4430-0070	125 GPM Akron Simple Apparatus Foam System	$1,428
4430-0071	1500V Williams A/B Around The Pump foam system. Include A/B tanks control.	$7,940
4430-0073	1.5 Feecon Around The Pump Foam System	$3,865
4430-0075	2.0 Feecon Around The Pump Foam System	$3,979
4430-0076	Eclipse Waterous Compressed Air Foam System 1000 GPM Manifold.	$56,471
4430-0077	Waterous Advantus 6.0 Foam System	$17,281
4430-0078	Classic 140 Compressed Air Foam System. Shall include (5) Discharge outlets (1) 2.5" Left Hosebed Preconnect Discharge, (2) 1.5" Crosslay outlets, and (2) booster reels.	$37,516
4430-0079	The foam system performance shall be tested and certified in compliance with 2009 NFPA 1901.	$258
4430-0080	The balanced pressure foam system performance shall be tested and certified in compliance with 2009 NFPA 1901.	$514
4430-0081	1500 Williams Around The Pump Foam System Up Graded to 2000gpm at 3%	$2,517
4430-0085	Classic 140 Compressed Air Foam System.	$21,305
4430-0093	Venom 5.0 Hypro/Foam Pro Foam System.	$15,786
4430-0094	Advent 12 Elecrict (230) Dual Foam System for Dual Foam Tanks	$22,388
4430-0107	WATP 500 B Foam System. Includes 1.5" Foam pick-up.	$7,425
4430-0109	Waterous Advantus 3.0 foam system.	$12,565
4430-0112	125 GPM Arkon Foam Eductor w/akron manual panel mount 1/4 turn foam valves (1) for A tank, and (1) for B tank. Location: [#LOC]	$2,914
4430-0113	The foam system shall be factory tested at, minimum, maximum, and midrange.	$258
4430-0114	Eclipse Compressed Air Foam System 3" Manifold w/Advantus 6.0 Foam system.	$66,424
4430-0115	125 GPM Akron foam eductor system with air actuation for both foam eductor and foam supply valve. Location: [#LOC].	$3,309
4430-0117	1500V Williams A/B Around The Pump Foam System with Single Tank and Aux Pickup to be use for Class A or Class B foam inlet.	$8,434
4432-0001	Akron 5178 Electric 2000 GPM Nozzle	$2,068
4432-0002	Akron 5070 Manual 2000 GPM Nozzle	$1,591
4432-0003	Elkhart SM2000 Electric Nozzle	$2,057
4432-0009	Hot Shot Ratio Controller 2" Discharge. Plumbed to: [#LOC].	$1,895
4432-0010	Hot Shot Ratio Controller 2.5" Discharge. Plumbed to: [#LOC].	$1,950
4432-0012	Advent Ratio Controller 2" Discharge. Plumbed to: [#LOC]	$1,551
4432-0013	Advent Ratio Controller 2.5" Discharge. Plumbed to: [#LOC]	$1,554
4432-0014	Advent Ratio Controller 3" Discharge. Plumbed to: [#LOC]	$1,577
4432-0015	Advent Ratio Controller 4" Discharge. Plumbed to: [#LOC]	$1,747
4432-0016	Advent Ratio Controller 5" Discharge. Plumbed to: [#LOC]	$3,187
4432-0019	Foam Pro Remote Start Switch	$629
4432-0020	Eclipse 1.5"/3.0" Compressed Air Foam System Discharge Kit. Location: [#LOC].	$20
4432-0022	1.5" Compressed Air Foam System Discharge Kit Location: [#LOC]	$301
4432-0023	2.0" Compressed Air Foam System Discharge Kit. Location: [#LOC].	$304
4432-0024	2.5" Compressed Air Foam System Discharge Kit. Location: [#LOC].	$307
4432-0025	3.0" Compressed Air Foam System Discharge Kit Location: [#LOC]	$343
4432-0026	3" Deck Gun Discharge Eclipse Compressed Air Foam System	$3,367
4432-0027	3" Deck Gun Compressed Air Foam System	$3,657
4432-0036	A/B Hypro/FoamPro manual foam selector.	$2,031
4432-0037	A/B Class 1 manual foam selector.	$2,932
4432-0045	Hot Shift Clutch	$2,762
4432-0052	Remote foam tank fill, FoamPro's "Power Fill".	$530
4432-0054	Akron Quick Disconnect Foam Pickup Tube on Driver's Side Pump Panel for Eductor. Located on: [#LOC].	$426
4432-0055	Elkhart Quick Disconnect Foam Pickup Tube on Driver's Side Pump Panel for Eductor Located on: [#LOC]	$605
4432-0056	Hale EZ-Fill foam system for a single foam tank. Includes clear hose wand (shipped loose). Controller and connection port located [#LOC].	$2,495

4432-0057	Hale EZ-Fill foam system for dual foam tank. Includes clear hose wand (ship loose). Controller and connection port located [#LOC].	$2,815
4432-0058	Akron quick-disconnect foam pickup tube on officer's side pump panel for eductor. Located on: [#LOC].	$426
4432-0059	Elkhart Quick Disconnect Foam Pickup Tube on Officer's Side Pump Panel for Eductor Located on: [#LOC]	$605
4432-0060	Label for ATP foam systems.	$30
4432-0061	FoamPro foam system refill. Includes clear hose wand (ship loose). Controller and connection port located [#LOC].	$2,820
4432-0063	Hale Foam Logix Air Actuated A/B Selector	$3,317
4432-0064	Hypro Foampro Electric Acutated A/B Selector	$3,114
4432-0065	3" Deck Gun CAFSPRO Compressed Air Foam System	$5,832
4432-0066	Additional 3/4" Foam Tank Valve for 95 Eductor and Dual Foam Cells	$409
4432-0070	Hot Shot Ratio Controller 4" Discharge. Plumbed to: [#LOC]	$2,686
4432-0073	Foam Fill Connection Provide a 1.5" FNST tank fill connection for each tank with rocker lug plug, and a replaceable .25" mesh strainer on the left pump panel within easy reach of the ground, Install a check valve to prevent foam loss during hose connection, also install a 1/4" turn drain valve plumbed from inboard side of check valve so line can be drained.	$598
4432-0074	.375 Foam Maniflod Drain	$118
4432-0075	FoamPro Advanced Digital Controller	$121
4432-0077	Foam Pickup 10 feet with 1.0 PVC Clear Spiraflex Hose IPOS	$214
4432-0078	Foam tank drain plumbed to side panel with valve and 3/4" male garden hose connection. To allow filling of remote foam unit and pails from tank.	$770
4432-0079	A/B Class 1 Manual Foam Selector	$2,932
4432-0080	Special CAFS/FOAM Manifold for (4) preconnects, Deck Gun, and 3" Right Rear discharge.	$5,392
4432-0082	Foam Pickup 2" on Side Pump Panel. With Manual valve and Pickup Tube.	$717
4432-0083	Deck Gun Foam Tank To Pump Connection Provide a Manual 1.5" Valve Locate Next to Deck gun outlet.	$719
4432-0089	CAFS Manual Air Valve to be .3/4" Valve in place of standard.	$123
4432-0090	CAFS/Foam System Operation Label "Operate only (2) 1 3/4" Discharges or (1) 2 1/2" at a time"	$163
4432-0091	Special design 5" foam/water manifold with check valves.	$3,432
4432-0093	Hot Shot Ratio Controller 5" . Plumbed to: [#LOC]	$2,738
4432-0094	Waterous Electric Actuated A/B Selector.	$2,979
4432-0096	Hale Foam Logix Remote Start Switch	$662
4432-0097	.75" Foam Maniflod Drain with 1/4 turn valve.	$409
4432-0099	Foam System Plumbed to [#LOC].	$269
4432-0100	2.0" Compressed Air Foam System Discharge Kit with Electric actuated 1/2" valve. Location: [#LOC].	$334
4432-0101	2.5" Compressed Air Foam System Discharge Kit with Electric actuated 3/4" valve. Location: [#LOC].	$338
4432-0104	Hale Manual Single Foam Flush System.	$1,038
4432-0105	A/B Foam Selector locate Driver side walk way recess in box on diamond plate panel at front of module.	$155
4432-0112	5" Discharge Right Side Electric Valve W/Ratio Controler for Hot Shot II System. Include metering valve Location: [#LOC]	$5,683
4432-0113	Foam Intake Test Port Locate on the intake side of pump between the strainer and the pump, bulkhead fitting is to be on operator pump panel.	$86
4432-0114	Foam testing. The foam system shall be calibrated for 1 X 3 Thunderstrom foam AR-AFFF concentrate. The foam propotioning system shall provide .25%, .5%, 1%, and 3% foam solutions within the allowable concentration ranges required in NFPA #1901. Each percentage shall be tested at a high and low flow and a revit shall be install at mid point..	$1,849
4432-0117	1.5" FNST Hydro- Foam Aux Foam pickup. The 1.5" FNST foam inlet fitting shall be located on officer side pump panel with a electic over air control valve. And be control at the operator panel.	$1,244
4432-0118	Foam Strainer Pump Panel Mount with 1" connection ports and 2.5" NST cap. (IPOS Strainer for foam system)	$952
4432-0119	Foam Strainer Pump Panel Mount with 1" connection ports and 2.5" NST cap. (For Foam Refill)	$952
4432-0121	Foam Tank Supply/Flush 1" valves will be electric control operated through the V-MUX system. The flush valve to be located as close to foam tank supply valve as possible. A manual flush drain .75" valve will be located under the officer's side running board.	$932
4432-0122	A 1.50" x 10' reinforced concentrate hose and stinger shall be provided with NST threads to connect to the foam inlet as (shipped loose) for auxiliary foam operations.	$252
4432-0123	Eclipse 1.5"/3.0" Compressed Air Foam System Discharge Kit Location: [#LOC]	$482
4432-0125	6" Ratio Controller for Hot Shot II System. Include metering valve. Location: [#LOC].	$3,518
4432-0129	Hot Shot Ratio Controller 5" Discharge. Plumbed to: [#LOC].	$3,628
4432-0134	Eclipse 1.5"/3.0" Compressed Air Foam System Discharge Kit. Location: [#LOC].	$269

4432-0135	CAFS Audible w/light Low Air Alarm shall be tied into the CAFS air system. If it drop below 90PSI the alarm aviate.	$320
4432-0151	FoamPro aux foam fill kit. Include check valve, level sensor, placard and camlok connection.	$658
4432-0152	1.5" Foam Tank to pump Electric/Air Actuated. With a guard switch cover adjacent to the foam control display.	$915
4432-0153	CAFS system water drain shall be extended out to pump panel.	$207
4432-0159	CAFs system drains shall be extended to the officer's side pump panel area.	$313
4432-0160	3" Compressed Air Foam System Discharge Kit with Electric actuated 3/4" valve. Location: [#LOC]	$390
4432-0161	1.5" Compressed Air Foam System Discharge Kit with Electric actuated 1/2" valve. Location: [#LOC]	$333
4432-0162	6" High Flow Ratio Controller for Hot Shot II System. Include metering valve. Location: [#LOC].	$3,517
4432-0163	1.5" Foam Tank to pump Air Actuated. With a guard switch cover adjacent to the foam control display.	$914
4432-0164	Waterous Electric Acutated A/B Selector. A to be plumb to the foam tank, and B to be plumb to the left pump panel for a Aux foam pick up.	$2,979
4432-0165	Special design foam/water manifold to allow dealer supplied foam system to be plumbed to crosslay 1, crosslay 2 and rear discharge so they are foam ready.	$3,432
4435-0001	Class 1 Intelli-Tank water tank level gauge.	$437
4435-0002	Class 1 Intelli-Tank foam tank level gauge.	$453
4435-0003	Class 1 Intelli-Tank/Whelen 500 LED water tank level gauge package. Location of Whelen 500 tank level lights: [#LOC].	$3,549
4435-0004	Sight Tube Water Tank Level Gauge. Located driver's side front of body.	$451
4435-0005	Innovative Controls 5 Water Tank Level Gauge	$411
4435-0006	Innovated Contols 5 Foam Tank Level Gauge	$643
4435-0007	Class 1 Water Bar graph style Tank Level Gauge.	$689
4435-0008	Class 1 foam Bar graph style Tank Level Gauge.	$912
4435-0009	Fire Research TankVision model WL2600 Class A foam tank level gauge.	$847
4435-0010	Fire Research TankVision model WL2000 water tank level gauge.	$737
4435-0011	Fire Research TankVision model WL2700 B foam tank level gauge.	$846
4435-0012	Pump overheat indicator.	$326
4435-0013	4.5" Class 1 compound pressure gauge (30-0-600 PSI).	$173
4435-0014	Dual Read 4.5" Pressure Gauge (30-0-600 psi/100-0-4140 KPA).	$259
4435-0015	2.5" Class 1 compound pressure gauge (30-0-600). Discharge(s): [#LOC].	$124
4435-0016	Dual Read 2.5" Pressure Gauge (30-0-600 psi/100-0-4140 KPA). Discharge: [#LOC].	$175
4435-0018	Dual Read 3.5" Pressure Gauge (30-0-600 psi/100-0-4140 KPA). Discharge: [#LOC]	$237
4435-0019	3.5" Class 1 compound pressure gauge (30-0-600). Discharge: [#LOC].	$148
4435-0020	MC Products gauge heater line controls and strips for 4 gauges.	$667
4435-0021	Gauge heater strips, additional (EA).	$126
4435-0022	6" NoShok pressure gauge (30-0-600).	$605
4435-0023	4" NoShok master pressure gauges (30-0-600).	$183
4435-0024	6" Class 1 compound pressure gauge (30-0-600).	$595
4435-0025	Flowminder Super System. Discharge: [#LOC].	$2,465
4435-0026	Flowminder System with Totalizer. Discharge: [#LOC].	$1,593
4435-0027	Flow Meter Value System. Discharge: [#LOC].	$1,462
4435-0030	Transmission temperature gauge.	$225
4435-0031	Pump hourmeter on pump operator's panel.	$140
4435-0033	Ammeter Gauge on Pump Operator's Panel	$255
4435-0034	Fuel level gauge on pump operator's panel.	$309
4435-0035	Enfo III System on Pump Operator's Panel	$933
4435-0036	Engine gauge package at the pump operator's panel.	$646
4435-0038	Class 1 Engine Status Center on Pump Operator's Panel	$1,533
4435-0040	FRC Tachplus engine monitoring display.	$1,256
4435-0047	Class 1 Tank Level Intel Water Gauge, Additional. Location: [#LOC].	$503
4435-0049	Class 1 tank level water LED graph gauge, additional. Location: [#LOC].	$689
4435-0050	FRC Tank Level Water TankVision Gauge, Additional. Location: [#LOC].	$469
4435-0051	Innovated Controls 5 Light Tank Level Water Gauge Additional Location: [#LOC]	$615
4435-0052	Class 1 Tank Level Water Mini Gauge Additional. Location: [#LOC].	$460
4435-0053	FRC Tank Level Water TankVision model WLA205-A00 Mini Gauge. Location: [#LOC].	$350
4435-0054	Innovative Controls 5 Light Tank Level Water Mini Gauge. Location: [#LOC].	$480
4435-0055	Class 1 Tank Level Intelli Foam Gauge Additional. Location: [#LOC].	$503
4435-0056	Class 1 Tank Level Foam Mini Gauge Additional Location: [#LOC]	$460
4435-0057	FRC Tank Level A Foam Tank Vision model WLA205-A00 Mini Gauge, Additional. Location: [#LOC].	$419
4435-0058	FRC Tank Level B Foam Tank Vision model WLA205-A00 Mini Gauge Location: [#LOC]	$419
4435-0059	Innovated Controls Tank Level Foam Mini Gauge Additional Location: [#LOC]	$480

4435-0063	Duplex Master Gauge for CAFS or Industrial Foam Systems.	$465
4435-0064	FRC Insight Ultimate model FPA400 combination pressure/flow gauge. Location: [#LOC].	$1,857
4435-0065	2.5" NoShok pressure gauge (30-0-600). For: [#LOC].	$134
4435-0066	IC5/Whelen 500 Water Tank Level Gauge Package Location of Whelen 500 Tank Level Lights: [#LOC]	$3,523
4435-0067	Class 1/Whelen PSTank Water Tank Level Gauge Package. Location of Whelen PSTank Strip-Lights: [#LOC].	$1,671
4435-0068	IC5/Whelen PSTank Water Tank Level Gauge Package Location of Whelen PSTank Strip-Lights: [#LOC]	$1,645
4435-0069	Class 1 Enfo IV system on pump operator's panel.	$836
4435-0070	Fire Research TankVision model WL2600 Class A and WL2700 Class B foam tank level gauges.	$1,690
4435-0071	FRC Tank Vision model WLA205-A00 Tank Level A and B Foam Gauges Location: [#LOC]	$836
4435-0072	Fire Research Tank Vision Water Tank Level Gauge with Automatic Tank Filling System model ATA400 Location: [#LOC]	$2,584
4435-0074	FRC Water Tank Level Gauge with Driver for Spartan Chassis only.	$981
4435-0083	Innovative Controls 10 LED SL series water tank level gauge.	$448
4435-0084	Innovative Controls 10 LED series foam tank level gauge.	$643
4435-0085	Innovative Controls 10 LED SL series tank level water gauge, additional. Location: [#LOC].	$615
4435-0086	Innovative Controls 10 LED series Tank Level Water Mini Gauge. Location: [#LOC].	$480
4435-0087	Innovative Controls IC 10 LED SL series Tank Level Foam Mini Gauge Additional. Location: [#LOC].	$480
4435-0088	IC 10 LED SL series/Whelen 500 water tank level gauge package. Location of Whelen 500 tank level lights: [#LOC].	$3,523
4435-0089	IC 10 LED SL series/Whelen PSTank water tank level gauge package. Location of Whelen PSTank Strip Lights: [#LOC].	$1,645
4435-0090	Additional PSTank Level Strip-Light. Located: [#LOC].	$400
4435-0092	2.5" Class 1 compound pressure gauge (30-0-400). Discharge: [#LOC].	$124
4435-0093	3.5" Class 1 pressure gauge (30-0-400). Discharge: [#LOC].	$148
4435-0094	Class 1 4-1/2" compound pressure gauge (30-0-400 PSI).	$173
4435-0095	2.5" Pressure Gauge (30-0-400). Discharge: [#LOC]. Color: [#COL].	$215
4435-0096	3.5" LED compound pressure gauge (30-0-400). Discharge: [#LOC]. Color: [#COL].	$221
4435-0097	4.5" compound pressure gauge (30-0-400). Color: [#COL].	$228
4435-0101	2.5" Span Pressure Gauge (30-0-600). Discharge: [#LOC].	$117
4435-0102	3.5" Span Pressure Gauge (30-0-600). Discharge: [#LOC].	$144
4435-0103	4.5" Span Pressure Gauge (30-0-600 PSI).	$167
4435-0104	MC Series 2000 4 Light Water Tank Level Gauge	$580
4435-0105	MC Series 2000 4 Light Series Foam Tank Level Gauge	$728
4435-0106	Dual Scale 3.5" Pressure Gauge 0-400 PSI / 100-2758 KPA. Replaces Standard	$288
4435-0108	Digital Pressure Gauge IPO Duplex Gauge	$741
4435-0109	2.5" Class 1 Pressure Gauge (30-0-600). IPO Duplex	$124
4435-0110	Pump Overheat Gauge Indicator with Audible Alarm	$416
4435-0111	MC Series 500 4 LED Series Water Tank Level Gauge	$688
4435-0112	Class 1 Pressure 4.5" Gauge (30-0-300 PSI)	$173
4435-0113	FRC TankVision/Whelen PSTank water tank level gauge package. Location of Whelen PSTank Strip-Lights: [#LOC].	$2,218
4435-0114	Digital CAFS CFM Flow Meter	$1,883
4435-0115	2.5" NoShok Pressure Gauge (-30-0-600 PSI/100-0-4140KPA). For: [#LOC].	$149
4435-0116	4" NoShock Dual Read Pressure Gauge 30-0-600PSI/100-0-4140KPA	$194
4435-0117	FRC Tank Level Foam Tank Vision Gauge Additional Location: [#LOC]	$532
4435-0118	4" NoShock Dual Read Pressure Gauge 30-0-400PSI/100-0-2750KPA	$194
4435-0119	2.5" NoShok Pressure Gauge (0-400 PSI/-0-2700KPA) For: [#LOC]	$149
4435-0120	Duplex Master Gauge (0-400 PSI) for CAFS or Industrial Foam Systems.	$465
4435-0122	Fire Research Tank Vision model WL2000 Water Tank Level Gauge w/an audible alarm low level buzzer shall be installed. The buzzer shall sound when the tank volume indicator drops to 1/4 tank.	$880
4435-0123	FRC Insight model FPA410 Ultimate Pressure Gauge LPM/KPA Location: [#LOC]	$1,857
4435-0124	6" Class 1 Compound Pressure Gauge (30-0-400 PSI).	$583
4435-0125	Class Digital Pressure Gauge Discharge: [#LOC]	$741
4435-0126	Digital Master Pressure Gauge	$707
4435-0127	3.5" Span Pressure Gauge (0-400). Discharge: [#LOC]	$151
4435-0128	Dual Read 2.5" Span Pressure Gauge (0-300 psi/0-2050KPA). Discharge: [#LOC]	$166
4435-0129	Dual Read 6.0" Span Pressure Gauge (30-0-400 psi/100-0-2750 KPA)	$339
4435-0130	FRC Insight model FPA400 Ultimate Master Flow Gauge	$1,432
4435-0131	2.5" Class 1 Pressure Gauge (0-300). Discharge: [#LOC]	$131
4435-0133	FRC/Whelen 500 Water Tank Level Gauge Package Location of Whelen 500 Tank Level Lights: [#LOC]	$3,490

4435-0134	FRC Foam Tank Level Gauge "Class B Foam" with Driver for Spartan Chassis only.	$1,107
4435-0135	Class 1 Intelli/Whelen PSTank Water Tank Level Gauge Package Location of Whelen PSTank Strip-Lights: [#LOC]	$2,103
4435-0139	Span Pressure 4" Gauge (0-400 PSI)	$173
4435-0140	Span Master Intake/Pressure 4" 50/50 Gauge (30-0-300)	$290
4435-0147	Innovative Controls 14 LED SL series Water Tank Level Gauge	$454
4435-0149	IC 14 LED SL series/Whelen 500 Water Tank Level Gauge Package Location of Whelen 500 Tank Level Lights: [#LOC]	$3,552
4435-0151	4.5" Class 1 Pressure Gauge (30-0-600) Black Face w/White letters.	$183
4435-0152	2.5" Class 1 Pressure Gauge (30-0-600). Discharge with Black Face and White Letters: [#LOC]	$131
4435-0155	Dual Read 4.5" Span Pressure Gauge (30-0-600 psi/100-0-4140 KPA)	$259
4435-0156	Class 1 Intelli-40 Tank Water Tank Level Gauge with Blue LED's.	$655
4435-0157	Class 1 Intelli-40 Tank Foam Tank Level Gauge with Red LED's.	$626
4435-0158	6" Span Pressure Gauge (30-0-600)	$600
4435-0159	Dual Read 2.5" Pressure Gauge (30-0-400 psi/100-0-2750 KPA). Discharge: [#LOC]	$175
4435-0160	Transmission Temperature Gauge with light and a buzzer alarm for audible warning.	$322
4435-0161	Dual Read 4.5" Pressure Gauge (30-0-400 psi/100-0-2758 KPA)	$259
4435-0162	IC10/Whelen M6 LED Water Tank Level Gauge Package Location of Whelen M6 LED Tank Level Lights: [#LOC]	$3,648
4435-0174	Sight Tube Water Tank Level Gauge. Located inside pump compartment on driver's side as high/low as possible.	$451
4435-0175	Duplex Master Gauge (0-600 PSI) for CAFS or Industrial Foam Systems.	$533
4435-0177	Innovated Controls 14 LED SL series Tank Level Water Gauge Additional Location: [#LOC]	$637
4435-0178	Engine gauge package at the pump operator's panel.	$744
4435-0179	Deluxe engine gauge package with fuel, and transmission temp. gauge built into the tach gauge display at the pump operator's panel.	$850
4435-0180	2.5" Pressure Gauge Dual Read (0-400 PSI/-0-2700KPA) . Discharge: [#LOC]. Color: [#COL].	$219
4435-0181	4.5" Pressure Gauge (30-0-400 psi/100-0-2758 KPA). Color: [#COL].	$277
4435-0182	FRC Insight model FPA412 Ultimate Pressure Gauge LPM/KPA with back lighting Location: [#LOC]	$2,002
4435-0183	Sight Tube Water Tank Level Gauge with Indicator. Located inside pump compartment on driver's side as high/low as possible.	$451
4435-0184	2.5" NoShok pressure gauge (0-400). For: [#LOC].	$134
4435-0185	4" NoShok master pressure gauges 30-0-400PSI.	$226
4435-0186	Class 1 Tank Level Intelli 40 Water Gauge Additional Location: [#LOC]	$723
4435-0187	Class 1 Intelli-40 Tank Water Tank Level Gauge with Red LED's.	$671
4435-0188	Class 1 Intelli with (1) Whelen PSTank Water Tank Level Gauge. Location of Whelen PSTank Strip-Lights: Officer side rear of front cab door.	$1,246
4435-0190	IC10 Water with (1) Whelen PSTank Water Tank Level Gauge. Location of Whelen PSTank Strip-Lights: Officer side rear of front cab door.	$1,246
4435-0191	Dual Scale 3.5" Pressure Gauge 0-400 PSI / 100-2758 KPA.. Discharge: [#LOC].	$242
4435-0193	2.5" Class 1 compound pressure gauge (0-400). Discharge: [#LOC].	$124
4435-0196	2.5" Waterway Pressure Gauge Dual Read (30-0-600 psi/100-0-4140 KPA). Discharge: [#LOC]. Color: [#COL].	$176
4435-0198	3.5" Class 1 pressure gauge (0-400). Discharge: [#LOC].	$151
4435-0199	Class 1 Intelli-40M Tank Water Tank Level Gauge.	$671
4435-0200	2.5" Class 1 pressure gauge (0-600). Discharge: [#LOC].	$120
4435-0205	3.5" LED Class 1 compound pressure gauge (30-0-400). Discharge: [#LOC]. Color: [#COL].	$220
4435-0206	4.5" compound pressure gauge (30-0-400). Color: [#COL].	$221
4435-0209	2.5" LED Class 1 compound pressure gauge (30-0-400). Discharge: [#LOC]. Color: [#COL].	$218
4435-0210	PSTank Level Strip-Light Pair Located: [#LOC] (Chassis only option require sale codes for gauge and driver)	$801
4435-0211	2.5" NoShok pressure gauge (30-0-600). Non-liquid filled. For: [#LOC].	$134
4435-0212	Generator hourmeter on officer side rear compartment.	$140
4435-0213	Class 1 3-1/2" compound pressure gauge (30-0-400 PSI). Master intake and discharge gauges.	$301
4435-0214	IC10 Water with (1) Whelen PSTank Water Tank Level Gauge. Location of IC10 LED tank level gauge is driver side pump panel. Location of Whelen PSTank Strip-Lights: Officer side rear of body facing rearward.	$1,246
4440-0005	2.5" Left Intake Akron Manual Valve.	$993
4440-0006	2.5" right intake Akron manual valve.	$993
4440-0010	3" Left Intake Akron Manual Valve	$1,630
4440-0011	3" Right Intake Akron Manual Valve.	$1,667
4440-0014	5" front intake without valve.	$3,161
4440-0015	5" Front Intake w/5" Air Actuated Valve and Relief.	$4,987
4440-0025	5" front intake with no valve plumbed through front bumper.	$3,534
4440-0026	5" Front Intake w/5" Air Actuated Valve and Relief Plumbed Through Front Bumper.	$5,361

4440-0027	2.5" Left Intake Hale Manual Valve	$1,013
4440-0028	2.5" Right Intake Hale Manual Valve	$1,190
4440-0029	3" Right Intake Hale Manual Valve	$2,108
4440-0031	3" Left Intake Hale Manual Valve	$1,654
4440-0036	2.5" left intake Elkhart manual valve.	$1,129
4440-0037	3" Left Intake Elkhart Manual Valve	$1,827
4440-0040	2.5" Right Intake Elkhart Manual Valve	$1,129
4440-0041	3" Right Intake Elkhart Manual Valve	$1,866
4440-0061	5" front intake w/5" Akron electric actuated valve and relief.	$6,243
4440-0062	5" Front Intake w/5" Elkhart Electric Actuated Valve and Relief	$6,246
4440-0064	2.5" Left Intake w/3" Akron Manual Valve	$1,519
4440-0065	2.5" Left Intake w/3" Hale Manual Valve	$1,696
4440-0066	2.5" Left Intake w/3" Elkhart Manual Valve	$1,710
4440-0067	2.5" Right Intake w/3" Akron Manual Valve	$1,519
4440-0068	2.5" Right Intake w/3" Hale Manual Valve	$1,696
4440-0069	2.5" Right Intake w/3" Elkhart Manual Valve	$1,710
4440-0074	5" Front Intake without Valve Low "S" in Tray	$3,080
4440-0075	5" Front Intake w/5" Air Actuated Valve and Relief Low "S" in Bumper Tray	$4,904
4440-0077	2.5" Side Intake Operator Control Akron Elec Valve Drivers side.	$2,641
4440-0078	2.5" Left Intake Elkhart Unibody TM Control Manual Valve	$1,230
4440-0082	2.5" Left Intake Akron Manual Valve With Integral 30 Degree Droop	$1,057
4440-0083	2.5" Right Intake Akron Manual Valve With Integral 30 Degree Droop	$1,057
4440-0084	5" Front Intake w/5" Manual Gear Actuated Valve and Relief	$5,849
4440-0089	5" Front Intake w/5" Electric Actuated Valve and Relief Low "S" in Bumper Tray	$6,162
4440-0092	3" Left Intake Elkhart Unibody Manual Valve	$1,630
4440-0093	3" Right Intake Elkhart Unibody Manual Valve	$1,667
4440-0094	2.5" Left Intake Elkhart Unibody Manual Valve	$993
4440-0095	2.5" Right Intake Elkhart Unibody Manual Valve	$993
4440-0096	5" Front Intake w/4" Hale Electric Actuated Valve and Relief Low "S" in Bumper Tray	$6,141
4440-0097	2.5" Right Intake Elkhart Unibody Manual Valve	$993
4440-0098	5" Front Intake w/5" Akron Electric Actuated Valve and Relief	$6,243
4440-0103	5" Front Intake w/5" Elect Actuated Valve and Relief Plumbed Thru Front Bumper	$6,243
4440-0116	2.5" Left Intake w/3" Elkhart Unibody Manual Valve	$1,477
4440-0117	2.5" Right Intake w/3" Elkhart Unibody Manual Valve	$1,477
4440-0127	Elkhart 2.5" foam system intake with swing handle. For use with Williams Advent or Hot Shot foam systems. Locate to [#LOC].	$993
4440-0130	2.5" Right Intake w/3" Akron Manual Valve. Location: (REAR OF STREAM)	$1,519
4440-0131	2.5" Right Side intake Akron manual valve. Locate valve down low and the handle to be horizontally.	$1,144
4440-0138	2.5" right intake Akron manual valve with chrome plated end.	$1,037
4440-0140	2.5" right intake Akron manual valve, located rear of steamer IPO standard location.	$993
4440-0141	5" Front Intake w/5" Air Actuated Valve and Relief. A three position air control switch will be located adjacent to the front suction on top of gravel shield inboard of front suction swivel.	$4,987
4445-0004	Front intake swivel 5" polished chrome.	$1,879
4445-0005	Front intake swivel 6" polished chrome.	$1,953
4445-0006	Intake Adapter 5" FNPT x 4.5" MNST for Front Intake	$381
4445-0007	Intake adapter 5" FNPT x 6" MNST for front intake.	$471
4445-0008	Intake Relief Valve - Elkhart.	$563
4445-0009	Intake relief valve, Akron.	$412
4445-0011	Valve Relief Intake - Ross 2.5"	$1,703
4445-0013	2.5" Check Valve for [#LOC] intake.	$355
4445-0014	3" Check Valve for [#LOC] Intake	$608
4445-0015	6" Check Valve for [#LOC] Steamer	$591
4445-0016	Intake relief valve, Hale 2.5".	$567
4445-0018	Intake relief valve outlet to be extended to the side of the truck under the running board. Includes tag that reads "Intake Pressure Relief Outlet - Do Not Cap".	$255
4445-0019	Intake Adapter 5" FNST x 4.5" MNST for Front Intake	$381
4445-0020	Intake Adapter 5" FNST x 6" MNST for Front Intake	$471
4445-0023	Recessed front suction intake swivel in bumper, 3" in tray.	$865
4445-0024	Intake adapter 5" FNPT x 5" MNST for front intake.	$350
4445-0025	Intake Adapter 5" FNPT x 5" MNST for Rear Intake.	$350
4445-0028	Intake bleeder/drain valve to be extended to the side of the truck.	$51
4445-0030	Intake Adapter 5" FNST x 4" MNST for Front, Rear, or Side Intake.	$381
4445-0038	Waterous Intake Pressure Relief Valve.	$1,300
4445-0039	Intake Adapter 2-1/2"MNST X 3" FNST Swivels with plug.	$216
4445-0048	Intake pressure relief valve, Task Force Tips.	$398

4445-0049	Intake relief valve outlet to be extended to the side of the truck under the front body compartment. Includes tag that reads "Intake Pressure Relief Outlet - Do Not Cap".	$255
4445-0052	Recessed front suction intake swivel in bumper, 3" in tray using aluminum smooth plate with black Scorpion coating (IPOS diamond plate).	$937
4450-0007	1" Tank Fill Akron Manual Valve	$361
4450-0008	1.5" tank fill Akron manual valve.	$821
4450-0009	1.5" Tank Fill Hale Manual Valve	$951
4450-0010	2" tank fill Akron manual valve.	$987
4450-0011	2.5" tank fill Akron manual valve.	$1,056
4450-0012	1.5" tank drain Akron manual valve.	$720
4450-0014	Direct 2.5" water tank fill with Akron valve. Location: [#LOC].	$1,197
4450-0021	3" Dual Tank to Pump Akron Manual Valves - Side Panel Controlled	$1,406
4450-0022	3" tank to pump Akron manual valve.	$1,040
4450-0023	3" Tank to Pump Akron Air Actuated Valve	$1,455
4450-0032	2" Tank Fill Akron Electric Valve	$2,432
4450-0034	2.5" Tank Fill "AutoFill" Automatic Tank Fill Valve. Location: [#LOC].	$7,004
4450-0035	2.5" Direct Tank Fill Location: [#LOC]	$1,097
4450-0038	4" Air Tank to Pump for Cafspro Foam System	$3,938
4450-0054	2.5" Tank Fill Hale Manual Valve	$1,389
4450-0055	Hale 4" Manual Tank-to-pump	$2,971
4450-0056	3" Air Tank to Pump for Cafspro Foam System	$2,037
4450-0057	3" Tank to Pump Hale Manual Valve	$1,185
4450-0058	2.0" Tank Fill Hale Manual Valve	$1,130
4450-0059	1.5" Tank Fill Elkhart Manual Valve	$893
4450-0060	2" Tank Fill Elkhart Manual Valve	$1,058
4450-0061	2.5" Tank Fill Elkhart Manual Valve	$1,190
4450-0062	3" Tank to Pump Elkhart Manual Valve	$1,239
4450-0064	Direct 2.5" Water Tank Fill with Elkhart Valve. Location: [#LOC]	$1,330
4450-0066	Tank-to-pump 4" Akron Air Valve.	$3,169
4450-0067	Tank-to-pump 4" Akron electric valve.	$3,240
4450-0068	3" Tank to Pump w/3.5" Waterous Valve	$1,588
4450-0070	2.5" Tank Fill Hale Electric Valve	$2,490
4450-0071	Tank-to-pump 4" Hale Electric Valve	$4,084
4450-0072	2.5" Direct Fill Line into the tank, Akron electric valve. Location: [#LOC].	$2,887
4450-0073	3" Tank to Pump w/3.5" Waterous Electric Valve	$3,071
4450-0074	2" Tank Fill Akron Valve Handwheel Control	$1,918
4450-0075	2" Tank Fill Elkhart Valve Handwheel	$1,963
4450-0076	2.5" Tank Fill Akron Valve Handwheel Control	$1,986
4450-0077	2.5" Tank Fill Elkhart Valve Handwheel Control	$2,031
4450-0078	3" Dual Tank to Pump Akron Air Valves.	$2,315
4450-0082	1.5" Tank Drain Hale Manual Valve	$811
4450-0083	1.5" Tank Drain Elkhart Manual Valve	$791
4450-0085	3" Tank to Pump Elkhart Unibody Manual Valve	$1,317
4450-0086	2" Tank Fill Elkhart Unibody Manual Valve	$1,061
4450-0087	2.5" Tank Fill "AutoFill" Automatic Tank Fill Valve. Location: [#LOC].	$7,053
4450-0088	2" Tank Fill Elkhart Unibody Electric Valve	$2,248
4450-0089	Tank-to-pump 3" Elkhart Electric Valve	$2,701
4450-0090	1.5" Direct Tank Fill Elkhart Unibody Manual Valve Left Side Panel	$986
4450-0091	2.5" Direct Tank Fill "AutoFill" Automatic Tank Fill Valve. Location: [#LOC].	$3,963
4450-0092	3" Tank to Pump Akron Valve Hand Wheel Control.	$2,146
4450-0093	Tank-to-pump 3" Akron Electric Valve	$3,024
4450-0099	3" Tank to Pump Elkhart Unibody Air Actuated Valve	$1,466
4450-0105	3" Tank Fill Akron Manual Valve	$1,389
4450-0107	Direct 2.5" water tank fill with 3" Elkhart manual valve. Location: [#LOC].	$1,533
4450-0108	2" tank fill Akron electric valve.	$2,432
4450-0109	2.5" Tank Fill Direct Akron Electric Valve Location: [#LOC]	$2,887
4450-0110	Tank-to-pump 4" Akron Electric Valve	$3,240
4450-0114	3" Tank to Pump Electric Over Air Actuated Valve. (For Pump&Roll Operation)	$1,543
4450-0117	Tank-to-pump 4" Elkhart Unibody Electric Valve	$3,240
4450-0119	3" tank to pump Akron manual valve w/4" plumbing.	$1,059
4450-0121	3" Tank To Pump Akron Air Actuated Valve w/4" Plumbing.	$1,455
4450-0122	3" Tank To Pump Akron Electric Actuated Valve w/4" Plumbing	$2,990
4450-0123	Direct 3" Tank Fill Akron Electric Valve with control at pump operator panel valve Location: [#LOC]	$2,917
4450-0124	3" Tank To Pump Elkhart Unibody Manual Valve w/4" Plumbing.	$1,111
4450-0125	3" Tank To Pump Elkhart Unibody Air Actuated Valve w/4" Plumbing	$1,539

4450-0127	2.5" Tank Fill "AutoFill" Automatic Tank Fill Valve with IntelliTank level gauge located behind officer side pump panel. Location: [#LOC].	$7,004
4450-0132	3" Tank To Pump Elkhart Unibody Electric Actuated Valve w/4" Plumbing	$3,004
4450-0133	3" Tank To Pump Akron Air Actuated Valve w/4" Plumbing	$1,455
4450-0134	3" Tank To Pump Akron Manual Valve Hand Wheel Control w/4" Plumbing	$2,612
4450-0146	Tank-to-pump 3" Elkhart Unibody Electric Valve	$2,701
4450-0156	3.0" Tank Drain Akron Air Actuated Valve.	$1,455
4450-0160	Bush Pack 1" Fill with 1" Cam-Lock fitting located on pump operator pump panel. Include a 3' length of 1" clear hose.	$365
4450-0164	Direct 2.5" Tank Fill Akron Electric Valve with Dual Control (1) control at the valve and (1) at the pump operator panel. Valve location officer side rear.	$3,479
4450-0166	Additional 3" Tank To Pump Akron Manual Valve w/4" plumbing. Shall include internal plumbing to the rear of the tank into the rear sump on officer side.	$1,914
4450-0175	4" rear direct tank fill. Includes electric dual control (1)operator panel (1) at valve, with 4" Swivel Storz elbow and cap. Located to (1) left and (1) right side off the rear body	$3,434
4450-0176	3" Tank to Pump Electric Over Air Actuated Valve w/4" Plumbing.. Include (1) control in cab, and (1) control pump operator panel).	$1,542
4450-0185	3" Tank to Pump Electric Over Air Actuated Valve. (For Pump&Roll Operation)	$1,542
4450-0186	2.5" Tank Fill "AutoFill" Automatic Tank Fill Valve. Location: [#LOC].	$7,183
4450-0199	Reverse push/pull handle on 3" tank to pump Akron manual valve. The "in" position will be open and the "out" position will be closed.	$48
4450-0207	3" Tank to Pump Electric Over Air Actuated Valve. (For Pump&Roll Operation)	$1,095
4450-0210	2" tank fill Akron electric valve & Navigator Pro 9323 Controller.	$2,371
4450-0211	2.5" Direct Tank Fill "AutoFill" Automatic Tank Fill Valve. Waterous (Auto Fill) shall be "T" into both side 6" intake, front, and rear 5" intake with a special manifold and check valves.	$4,893
4455-0010	Winterization Package. System shall protect the pump, piping, firefighting systems and watertank to 0 degree. While in storage the winterization system shall be powered through shoreline connection.	$3,698
4460-0000	Air outlet w/snubber valve. Location: [#LOC].	$239
4460-0001	Air blow-out for: [#LOC].	$225
4460-0002	Hose reel blow-out, primary.	$229
4460-0004	Tags mechanically fastened with screws.	$372
4460-0005	Fire Shop Bezel Chrome - Standard 2.5" Gauge	$34
4460-0006	Radiator Fill Valve on Pump Panel.	$264
4460-0007	Air outlet with snubber valve and 25' hose. Location: [#LOC].	$269
4460-0008	Air Outlet Valve to operate off of CAFS System Compressor. Location: [#LOC].	$330
4460-0009	Pump panel tags, special color. (Must specify.)	$284
4460-0010	Pump panel tags - Special label. (Must specify.)	$242
4460-0017	Class 1 Color Coded Bezel Chrome - 2.5" Gauge.	$22
4460-0018	Class 1 color coded bezel, chrome - 3.5" gauge.	$25
4460-0023	Span Color Coded Bezel - 2.5" Gauge	$7
4460-0024	Span Color Coded Bezel - 3.5" Gauge	$7
4460-0026	CAFS Air Outlet Valve Recess Driver side Pump Panel with door.	$334
4460-0032	Push/Pull Rod Extrusion at pump panel to be thru bolted with nuts IPOS nut cert.	$84
4460-0033	CAFS Air outlet .75 valve with Handle and Quick Disconnect. Location: [#LOC]	$372
4460-0037	Fire Shopp NPFA Color Coded "T" handles with color coded tags.	$44
4460-0039	Innovative Control Color Coded Bezel Chrome - 2.5" Gauge	$95
4460-0043	Pump panel tags mechanically fastened with screws.	$372
4460-0059	Class 1 color coded bezel gauge trim ring - 2.5" Gauge	$17
4460-0061	Air outlet with 3/8" valve 1/4 turn, and 25' hose. Location:driver side	$317
4460-0062	Air outlet w/3/8" valve. Location: Officer side pump panel.	$263
4460-0067	Officer side pump panel shall include an access door to provide access to the cab tilt switch and manual jack as mounted.	$175
4460-0069	Class 1 color coded bezel gauge trim ring - 3.5" gauge.	$19
4465-0001	Fire Commander pressure governor. Includes engine gauges. Detroit S60 only.	$4,166
4465-0003	FRC In-Control pressure governor. Includes engine and master pump gauges.	$4,935
4465-0005	Class 1 Captain pressure governor.	$2,611
4465-0007	Class1 Command Master pressure governor. Includes pump intake pressure and discharge pressure, throttle, relief, tank level(s), water, oil, volt and tachometer.	$4,781
4465-0008	FRC PumpBoss Pressure Governor. Includes engine gauges.	$2,426
4465-0009	FRC Pro-S Pressure Governor	$2,561
4465-0010	FRC In-Control pressure governor TGA200. Includes engine transmission and master pump gauges.	$4,989
4465-0011	Class 1 TPG pressure governor. Includes, water, oil, volt and tachometer.	$2,013
4465-0012	Fire Commander II pressure governor. Includes engine gauges, Pump Ditigal Master Gauges. Detroit engines only.	$4,774

4465-0013	FRC In-Control pressure governor. Includes engine and master pump gauges.The discharge pressure display shall show pressures from 0 to 4000 kPa. The intake pressure display shall show pressures from -100 to 4000 kPa.	$4,935
4465-0015	FRC In-Control pressure governor TGA300. Includes engine, transmission, and master pump gauges.	$3,633
4465-0017	FRC PumpBoss pressure governor PBA400. Includes engine monitor gauges.	$2,426
4465-0018	FRC In-Control pressure governor TGA400. Includes engine, transmission, and master pump gauges.	$3,633
4465-0020	Class 1 TPG Plus pressure governor. Includes master intake and discharge gauges, water, oil, volt and tachometer.	$2,688
4465-0021	FRC In-Control pressure governor TGA400-A10. Includes engine, transmission, and master pump gauges.	$3,633
5000	**Electrical**	
5010-0003	Multiplex modem kit. Includes cable, modem, and adapter harness.	$818
5010-0004	Multiplex data logger.	$580
5010-0005	Multiplex electrical system for aerials.	$5,197
5010-0013	Vehicle data recorder - 2009 NFPA compliant. Includes occupant detection with display. Display location: [#LOC].	$2,302
5010-0015	Additional CrewGuard display for use with VDR. Location: [#LOC].	$443
5010-0024	Modem for use with the E-ONE multiplex electrical system.	$571
5010-0037	Multi-color touch screen display for multiplexed based electrical system. Location: [#LOC].	$1,693
5010-0039	V-MUX Electrical system for aerials.	$5,197
5010-0049	Vehicle data recorder - 2009 NFPA compliant. Includes occupant detection shown in multiplex display. E-ONE chassis only.	$1,986
5010-0051	HVAC Controlled through V-MUX display(s).	$1,044
5010-0052	Vista IV touch screen display for V-MUX electrical system. Location: [#LOC].	$1,912
5010-0057	GPS Module for V-MUX electrical system. Includes antenna. Requires Vista display.	$1,469
5010-0059	VFD Text display for V-MUX electrical system. Location: [#LOC].	$710
5010-0060	D-TEK Transmitter for V-MUX electrical system.	$1,346
5010-0061	D-TEK Receiver for V-MUX electrical system. (Shipped loose)	$524
5010-0065	Pump and roll screen for multiplex display. Reference specification for details.	$1,362
		$2,545
5050-0000	Vanner Bravo 1800 watt inverter. For use with (2) quartz lights. Includes on/off switch in cab. Inverter to be mounted in a body compartment as close to the chassis batteries as practical (20' max cable length).	
		$470
5050-0017	Body 110 volt outlets shall have a dedicated breaker within the breaker box for no more than every (2) body mounted receptacles (single outlet, duplex, etc. as applicable). This is to provide multiple isolated circuits as required that carry no more than (2) receptacles located throughout the body.	
5100-0000	Foot switch to control air horns located [#LOC].	$105
5100-0001	Switch circuit three way. Includes (1) additional switch. An additional switch required for more than two locations. Location: [#LOC].	$148
5100-0002	Momentary switch with 6' pendant for cab tilt. Yellow weatherproof push button at end of coiled cord. Location of switch plug-in: [#LOC]	$332
5100-0006	Foot switch to control Q2B located [#LOC].	$105
5100-0007	Foot switch to control electronic siren located [#LOC].	$105
5100-0009	Audible door ajar alarm wired through door ajar light.	$54
5100-0010	Additional push button hose reel switch. Location: [#LOC].	$165
5100-0011	Switch 12V for 120-240V (EA). Location: [#LOC].	$381
5100-0014	Air horns to be interlocked through the master warning switch.	$88
5100-0015	Back-up alarm override momentary switch located at the cab dash. The switch will allow for overriding the back-up alarm and reset after transmission is shifted again.	$51
5100-0019	Additional amber warning light override momentary switch located at the cab warning light switch panel. The switch will allow for overriding the rear additional amber warning lights and reset after ignition is turned off.	$286
5100-0020	Switch additional 12 volt/15 amp toggle. Location and function: Under driver side cab dash for master battery override.	$179
5100-0021	Opticom switch wired through upper level warning switch.	$67
5100-0022	Push-button hose reel switch. Location: [#LOC].	$165
5100-0029	Stirrup style hose reel switch. Location: [#LOC].	$165
5100-0036	Additional programming instructions: [#LOC].	$110
5100-0038	Hose Reel rewind switch located in rubrail.	$84
5100-0039	Foot switch(es) mounted on a 45 degree bracket.	$72
5100-0042	Ramsey control with 3' cord for cab tilt in addition to standard toggle. Red/Black weatherproof push buttons at end of cord. Location of switch plug-in: [#LOC].	$332
5100-0044	Rear cab heater switch. Function and location: [#LOC].	$179
5100-0045	Thermostatic controls for pump compt heaters. Thermostat set at freezing temp.	$225

5100-0046	Cut-off switch for Q2B main power. Switch to be accessible from driver's seat.	$243
5100-0047	Switch household 110V w/ weaterproof cover. Location and function: cab mounted next to air compressor for 120V air compressor	$179
5100-0048	Magnetic door ajar switches IPO std for all body compt doors.	$647
5100-0049	Ramsey control with 8' cord for cab tilt in addition to standard toggle. Red/Black weatherproof push buttons at end of cord. Location of switch plug-in: [#LOC].	$332
5100-0050	Push button testswitch for tank level gauge, push button wired "hot" to batteries to allow checking tank level in fire station without having to power up truck electrical system. Located on operator pump panel.	$311
5100-0055	Switch for hydraulic gen to be located on officer side overhead console IPOS.	$110
5100-0056	Hose deployment switch in front bumper tray. Includes hinged plate on bottom of bumper tray with switch on floor and indicator light on pump panel. Requires tray without slats. Location: [#LOC].	$525
5100-0059	Back-up alarm / rear back up lights override momentary switch located at the cab dash. The switch will allow for overriding the back-up alarm & back-up lights and reset after transmission is shifted again.	$51
5100-0060	Switch for 12V quartz lights to be located on officer side overhead console IPOS.	$110
5100-0061	Door ajar alarm override momentary switch located at the cab dash. The switch will allow for overriding the door ajar alarm and reset after transmission is shifted again.	$179
5100-0063	Ramsey control with 10' cord for cab tilt. Red/Black weatherproof push buttons at end of cord. Location of switch plug-in: next to manual cab tilt pump	$332
5100-0072	Locate Q2B brake in officer side overhead console IPO standard location of driver side overhead console.	$49
5100-0087	Ramsey control plug-in for cab tilt in addition to standard toggle. Does not include tether controller. Location: [#LOC].	$186
5100-0088	Linemaster Twin 491-S foot switch to control air horns and Q2B located [#LOC].	$339
5100-0089	Foot switch to control electric fire bell located [#LOC].	$105
5100-0090	Foot switch to control Scream Eagle siren located [#LOC].	$105
5100-0091	Switch 12V for 110-240V (EA). Location: cab switch panel for rear body quartz light(s).	$381
5100-0094	Ramsey control with 15' cord for cab tilt in addition to standard toggle. Red/Black weatherproof push buttons at end of cord. Location of switch plug-in: [#LOC].	$332
5100-0095	Switching controlled through the Multiplex display for 120-240V devices (EA). The 120-240V Multiplex switching utility shall be used for: [#LOC].	$381
5100-0098	Switch additional rocker lock-out safety style. Location and function: [#LOC].	$179
5100-0099	Momentary rocker switch for the Federal Rumbler (secondary siren) located on the driver and officer side overhead panels. The switches will allow for overriding the Federal Signal Rumbler siren and reset after ignition is turned off.	$286
5100-0100	Switch additional (2) position shall be installed and properly labeled to enable operator to activate the OEM traffic horn or air horn. The switch shall be located: rear of body driver side approximately 65" above ground level.	$179
5110-0003	High impact orange ABS plastic handheld spotlight SL-45 Location: [#LOC].	$197
5110-0004	Alternating flasher for headlights.	$304
5110-0005	Pre-wire for trailer hitch. Includes stop, left turn, right turn, marker and ground wires. Does not include connector.	$215
5110-0007	Audible indicator in cab with rear button. The rear button will be located on the driver's side at the rear behind the hand rail (if equipped).	$312
5110-0008	Audible indicator in cab with rear buttons. The rear buttons will be located, one each side at the rear, behind the hand rail (if equipped).	$343
5110-0009	Clock Digital 12/24 Waterproof mounted in cab officer's overhead dash.	$566
5110-0011	Vehicle Information Control Center for E-One Multiplexed trucks located on Driver's Side.	$5,380
5110-0012	Vehicle Information Control Center for E-One Multiplexed trucks located on Officer's Side.	$5,380
5110-0013	Vehicle Information Control Center for E-One Multiplexed trucks located on Driver's Side. Display Only, No computer.	$2,285
5110-0014	Vehicle Information Control Center for E-One Multiplexed trucks located on Officer's Side. Display Only, No computer.	$2,285
5110-0015	Vehicle Information Control Center for E-One Multiplexed trucks located at center of engine cover mounted on swivel bracket.	$5,718
5110-0016	Emi Testing and Certification	$3,653
5110-0017	Back-up alarm 97 dB.	$91
5110-0018	12 volt 12 gauge constant hot lead (24" long) with ground wire. Location: [#LOC].	$72
5110-0024	Back up alarm Grote 107 dB(A).	$237
5110-0025	Back up horn system. Includes 12v independent horn (NAPA 730-1047) below officer's side dash, 12v independent horn (NAPA 730-1047) at rear of body and Ramsey control switch with 25' tether at rear of body.	$746
5110-0026	12 volt 12 gauge wired through ignition lead (24" long) with ground wire. Location: [#LOC].	$72
5110-0032	Clock digital 12/24 waterproof mounted in [#LOC].	$566

5110-0037	Additional wiring instructions: [#LOC].	$328
5110-0039	Clock Digital 12/24 Waterproof mounted in cab officer's switch panel.	$566
5110-0040	Indicator light. Color: [#COL]. Location and function: [#LOC].	$103
5110-0042	Trailer wiring and connector for 2009 NFPA 1901 Type I, Type II or Type III trailer. Includes model 12-907 connector on body. Stop/turn/tail circuits shall be connected, remaining wires to be coiled up for future use. Trailer end 12-906 shipped loose.	$415
5110-0043	Back-up alarm Federal Reactor model 210350 self-adjusting.	$161
5110-0044	ABS cover for multiplex PDMs' located in the pump module.	$85
5110-0045	Radio interface cable-run a 7-conductor 20 gauge wiring (578865) from the pump panel microphone box to the center overehead area, leave a 30" coil of wire at each end.	$502
5110-0052	12V power distribution module. Includes (6) battery hot and (6) switched hot circuits. 100 amps max (IATS). Location: [#LOC].	$275
5110-0060	12 volt 4 gauge constant hot lead (24" long) with ground wire. Location: [#LOC].	$217
5110-0065	Lighted bumper guide (PR). Bores model 848211 located (1) each side of front bumper extension.	$366
5110-0067	Back up alarm Preco 97 dB(A) warble tone.	$241
5110-0068	Handheld flashlight, orange Streamlight Litebox flashlight with vehicle mount system. Location: [#LOC].	$170
5110-0069	Back up alarm ECCO model 410 97 dB(A) grommet mount.	$185
5110-0070	Vehicle Information Control Center for E-One Multiplexed trucks swivel pedestal mount located at center between driver and officer. Mid engine cabs only.	$5,718
5110-0079	Back up alarm Ecco model SA917 87-112dB.	$211
5110-0087	Tekonsha model Prodigy 2 trailer brake controls wired to connector. Control located in cab accessible to driver. Requires 9-pin connector.	$793
5110-0088	Lighted bumper guide (PR) with angled support brackets. Bores model 848211 located (1) each side of front bumper extension.	$475
5110-0089	Back-up alarm Ecco model 575 107dB.	$155
5110-0090	Breaker box grounding cable. 10' 2Ga cable attached to ground side of breaker box. Includes clamp on end of cable for use with aerial ground pad.	$207
5110-0094	Wiring instructions: Dedicated ground wire for 12V distribution module located behind officer seat.	$115
5110-0109	Indicator light, Weldon 9186-2300. Color: [#COL]. Location and function: [#LOC].	$103
5110-0112	Back up alarm Preco model 1040.	$160
5110-0117	ATIMS vehicle "Brick" system.	$4,740
5110-0124	Audible indicator in cab with rear buttons. The rear buttons will be located [#LOC].	$343
5110-0132	Indicator light. Color: Green. Location and function: driver side overhead for jake brake "on".	$103
5130-0000	Cord reel 150 feet of 12/3 black cord installed on the [#LOC] with an electric rewind.	$1,637
5130-0001	Cord reel electric with 200' of 10/3 black cable. Locate [#LOC].	$1,933
5130-0002	Cord reel electric with 200' of 10/3 yellow cable. Location(s): [#LOC].	$2,183
5130-0003	Cord reel electric with 200' of 10/4 black cable. Location: [#LOC].	$2,177
5130-0004	Cord reel electric with 200' of 10/4 yellow cable. Location [#LOC].	$2,824
5130-0005	Ground reel with 20' of cable and 3' rod to be used for grounding unit while using the generator.	$370
5130-0006	Cord reel rollers mounted on reel in [#LOC].	$315
5130-0007	Cord connector. Daniel Woodhead 3 wire NEMA 5-15 straight blade female located on cord for reel in [#LOC].	$73
5130-0008	Cord connector. Daniel Woodhead 3 wire NEMA L5-15 twist lock female located on cord for reel in [#LOC]	$74
5130-0009	Cord connector. Daniel Woodhead 3 wire NEMA L5-20 twist lock female located on cord for reel in [#LOC].	$102
5130-0010	Cord connector. Daniel Woodhead 4 wire NEMA L14-20 twist lock female located on cord for reel in [#LOC].	$102
5130-0011	Cord connector. Daniel Woodhead 3 wire NEMA L6-20 twist lock female located on cord for reel in [#LOC]	$102
5130-0012	Junction box Circle-D with four (4) 3-wire NEMA L5-15 110 volt 15 amp twist lock receptacles. Located on cord for reel in [#LOC].	$666
5130-0013	Junction box Circle-D with four (4) 3-wire NEMA L5-20 110 volt 20 amp twist lock receptacles. Located on cord for reel in [#LOC].	$666
5130-0014	Circle D wall/floor mounting box. Locate box for use with reel in or on [#LOC].	$130
5130-0015	Junction box Circle-D with two (2) 15 amp straight blade and two (2) 20 amp twist lock receptacles. Located on cord for reel in [#LOC].	$841
5130-0016	Junction box Circle-D with all twist lock, 2-120V and 2-240V outlets. Located on cord for reel in [#LOC].	$824
5130-0017	Junction box Woodhead with four (4) NEMA L5-15 110 Volt 15 Amp twist lock receptacles. Located on cord for reel in [#LOC].	$1,324
5130-0018	Junction box, Daniel Woodhead, with four (4) NEMA L5-20 110 volt 20 amp twist lock receptacles. Located on cord for reel in [#LOC].	$1,058

5130-0022	Cord reel rollers mounted through panel. Location(s): [#LOC].	$315
5130-0024	Electric cord reel rewind switch. Switch located [#LOC].	$105
5130-0026	Cord connector. Fire Power 3 wire 20A/110V female located on cord for reel in [#LOC].	$533
5130-0027	Cord connector. Duraline 4 wire 20A/220V female located on cord for reel in [#LOC].	$140
5130-0028	Cord reel rollers mounted on reel.	$315
5130-0030	Junction box Circle-D with one (1) straight blade and three (3) twist lock receptacles. Located on cord for reel in [#LOC].	$841
5130-0031	Cord reel electric/manual back-up with 200' of 10/3 black cable. Crank handle mounted next to reel. Locate [#LOC]	$2,323
5130-0032	Cord reel electric with 150' of 10/4 yellow cable. Location [#LOC]	$2,824
5130-0033	Junction box Circle D with four (4) 3-wire NEMA 5-15 110 Volt 15 amp straight blade receptacles. Located on cord for reel in [#LOC].	$666
5130-0034	Cord reel Akron electric with 200' of 10/3 yellow cable. Location(s): [#LOC].	$2,085
5130-0035	Junction box Circle-D with (3) L5-15 and (1) L5-20 110Volt twist lock receptacles. Located on cord for reel in [#LOC].	$666
5130-0036	Diamond plate cord reel cover over reel. Use rollers provided with reel on cover IPO E-One supplied if applicable. Location: [#LOC]	$551
5130-0037	Cord reel Akron electric with 200' of 10/4 yellow cable. Location(s): [#LOC]	$2,728
5130-0038	Junction box Circle-D with (2) L5-20 twist lock and (2) 5-20 110Volt straight blade duplex receptacles. Located on cord for reel in [#LOC].	$666
5130-0039	Roller support bracket up high at compt opening for reel in [#LOC].	$238
5130-0040	Hannay PWM (Pulse Width Modulator) control for reel. Mounted next to switch for cord reel in [#LOC].	$592
5130-0042	Junction box Circle-D with four (4) 3-wire Nema 5-20 110Volt 20 Amp duplex receptacles. Located on cord for reel in [#LOC].	$737
5130-0043	Cord reel Akron electric with rear mounted motor. Includes 200' of 10/3 yellow cable. Location(s): [#LOC].	$2,375
5130-0044	Junction box Akron with (2) 5-20 125v 20 Amp duplex recepts and (2) L5-20 125v 20 Amp twist lock recepts. Located on cord for reel in [#LOC].	$524
5130-0045	Akron model EJB-VMT-TP mounting box. Locate box for use with reel in or on [#LOC].	$255
5130-0046	Junction box Circle-D with one (1) 5-20 straight blade and three (3) L5-20 twist lock receptacles. Box wired as 240v with individual circuit breakers on box. Located on cord for reel in [#LOC].	$841
5130-0048	Junction box Circle-D with (2) NEMA 5-20 120V GFCI duplex and (2) NEMA L6-20 220V twist lock receptacles. Located on cord for reel in [#LOC].	$841
5130-0049	Cord reel electric for 200' of 10/3 cable. Cable not included. Location(s): [#LOC]	$1,953
5130-0054	Cord reel electric with 200' of 8/3 black cable. Locate [#LOC]	$3,313
5130-0055	Cord reel rollers mounted on support bracket. Location(s): [#LOC]	$315
5130-0056	Junction box Woodhead with (3) NEMA L5-15 110 Volt 15 Amp twist lock receptacles and (1) NEMA 5-20 110 Volt 20 Amp household receptacle. Located on cord for reel in [#LOC].	$1,324
5130-0057	Mounting box for Woodhead junction box. Locate box for use with reel in or on [#LOC].	$238
5130-0058	Junction box Akron with four (4) 3-wire NEMA L5-20 110 volt 20 amp twist lock receptacles. Located [#LOC].	$524
5130-0059	Junction box Circle-D with four (4) FirePower FP11 110Volt 20 Amp receptacles. Located on cord for reel in [#LOC].	$1,086
5130-0061	Cord reel electric with 250' of 10/3 black cable. Locate [#LOC].	$2,282
5130-0062	Junction box Circle-D with (2) 5-20 straight blade and (2) twist lock receptacles; (1) L5-20 and (1) L5-15. Located on cord for reel in [#LOC].	$841
5130-0063	Cord reel electric with 200' of 12/3 black cable. Locate [#LOC].	$2,282
5130-0067	Junction box Akron with (4) 5-20-GFCI 125v 20 Amp duplex recepts. Includes 12" pigtail with L14-20 connector and rubber feet. Located on cord for reel in [#LOC].	$524
5130-0069	Cord reel electric with 250' of 10/3 yellow cable. Locate [#LOC].	$2,594
5130-0070	Cord connector. Hubbell 4 wire NEMA L14-20 twist lock female located on cord for reel in [#LOC]	$102
5130-0073	Cord reel electric low profile with 200' of 10/3 yellow cable. Location(s): [#LOC].	$2,767
5130-0079	Cord reel electric with 150' of 10/3 yellow cable. Location(s): [#LOC].	$2,004
5130-0080	Junction box Circle-D with four (4) 3-wire NEMA L5-20 110 volt 20 amp GFCI twist lock receptacles. Located on cord for reel in [#LOC].	$841
5130-0081	Cord reel electric model ECR 1620-17-18 with 200' of 10/4 yellow cable. Location [#LOC].	$2,824
5130-0082	Cord connector. Daniel Woodhead 3 wire NEMA L5-30 twist lock female located on cord for reel in [#LOC].	$144
5130-0083	Slideout cord reel roller assembly. For cord reel located in [#LOC].	$876
5130-0084	Junction box Circle-D with one (1) 15 amp straight blade and three (3) 15 amp twist lock receptacles. Located on cord for reel in [#LOC].	$841
5130-0087	Cord connector. Daniel Woodhead 4 wire NEMA L14-30 twist lock female located on cord for reel in [#LOC].	$144
5130-0088	Junction box Woodhead with two (2) NEMA L5-20 110V 20A twist lock and two (2) NEMA 5-20 110V 20A duplex receptacles. Located on cord for reel in [#LOC].	$1,202

5130-0089	Swing out roller assembly for cable reel. Roller is Hannay Reels w/ 2.5" opening. Location: [#LOC]	$315
5130-0090	Junction box Akron with (4) 5-15 120v 15 Amp duplex recepts. Located on cord for reel in [#LOC].	$524
5130-0091	Roller support bracket for reel. Rollers and bracket shall be mounted: [#LOC].	$238
5130-0094	Cord reel electric with 200' of 10/3 black cable model ELFCR1622-14-16. Locate [#LOC].	$1,933
5130-0095	Cord reel Akron electric low profile with 200' of 10/3 black cable with rollers and cord stop. Location(s): [#LOC].	$2,496
5130-0098	Cord reel Akron electric low profile with 200' of 10/3 yellow cable with rollers and cord stop. Location(s): [#LOC].	$2,756
5130-0101	Cord reel electric with 150' of 10/4 yellow cable. Reel to include strap (Comet) brake to provide drag pressure to reel axle. Location [#LOC]	$2,895
5130-0102	Junction box Circle-D with four (4) 3-wire 120Volt 20 Amp Hubbel model HBL7310B twist lock receptacles. Located on cord for reel in [#LOC].	$841
5130-0103	Junction box Circle-D with four (4) 3-wire NEMA L5-20 110 volt 20 amp GFCI twist lock receptacles with 220V feed. Located on cord for reel in [#LOC].	$841
5150-0003	Weldon auxiliary turn signal model 9186-8560 (PR). Location: [#LOC]	$185
5150-0006	Whelen 600 series LED horizontal mount tail lights. Includes LED stop/tail, arrow turn and halogen back-up lights with horizontal Cast 3 housing and weatherproof connectors.	$1,211
5150-0007	Whelen 600 series LED vertical mount tail lights. Includes LED stop/tail, arrow turn and halogen back-up lights with vertical Cast 3 housing and weatherproof connectors.	$1,183
5150-0008	Whelen 600 series LED vertical mount tail lights. Includes LED stop/tail, arrow turn and halogen back-up lights with vertical Cast 4 housing and weatherproof connectors.	$1,448
5150-0010	Whelen 600 series LED horizontal mount tail lights. Includes LED stop/tail, turn and halogen back-up lights. Available on G067, L193 and Q100/114 only. With weatherproof connectors.	$1,301
5150-0011	Whelen 600 series LED vertical mount tail lights. Includes LED stop, tail, turn and halogen back-up lights with vertical Cast 3 housing and weatherproof connectors.	$1,274
5150-0012	Whelen 600 series LED vertical mount tail lights. Includes LED stop/tail, turn and halogen back-up lights with vertical Cast 4 housing and weatherproof connectors.	$1,359
5150-0013	Whelen 600 series horizontal mount taillights. Includes incandescent stop/tail, arrow turn and halogen backup light. Available on G067 and L193 only. With weatherproof connectors.	$570
5150-0015	Whelen 600 series vertical mount taillights. Includes incandescent stop/tail, arrow turn and halogen backup lights with vertical Cast 4 housing and weatherproof connectors.	$658
5150-0017	License plate light LED with chrome housing located at the rear of the body.	$122
5150-0019	Marker lights addtional red LED Trucklite Model 21 (PR). Location: [#LOC]	$157
5150-0020	Weldon Model 1010 LED / incandescent taillights. Includes red LED stop/tail/turn and clear incandescent backup.	$340
5150-0023	Weldon Model 1010 LED / incandescent tail lights. Includes red LED stop/tail, amber LED turn and clear incandescent back-up.	$496
5150-0026	Marker light LED body/cab package. E-ONE custom cab with aerial ladder, Mid-Mount platform or Bronto bodies only.	$1,291
5150-0028	Marker light LED body/cab package. E-ONE custom cab with rear mount aerial platform bodies only. Includes (3) marker lights on front of platform.	$1,522
5150-0032	Bracket license plate at rear of body.	$35
5150-0035	Trucklite LED taillights. Includes 4" red LED stop/tail, amber LED turn and clear incandescent backup.	$601
5150-0036	Truck-Lite LED tail lights. Includes 4" red LED stop/tail, amber LED turn and clear LED back-up.	$763
5150-0037	Zico backing light (PR) with white pained housing model #ZQL-RV-H7614. Location: [#LOC].	$358
5150-0039	Marker lights Britax amber/red rubber housed mounted on the rear body corners angled down.	$268
5150-0042	Federal Signal LED tail lights. Includes 4" diameter red LED stop/tail, amber turn and LED clear back-up.	$519
5150-0050	Zico backing lights (PR) with polished stainless steel housing model #ZQL-SS-H7614. Location: [#LOC].	$551
5150-0052	Code 3 65STK4 vertical mount taillights. Includes red LED stop/tail, amber LED turn and white LED backup lights.	$1,844
5150-0053	Code 3 65PKG vertical mount tail lights. Includes red LED stop/tail, amber arrow LED turn and white LED back-up lights.	$1,501
5150-0055	Whelen 600 series LED horizontal mount tail lights. Includes LED stop/tail, arrow turn and back-up lights with horizontal Cast 3 housing and weatherproof connectors.	$1,916
5150-0056	Whelen 600 series LED vertical mount tail lights. Includes LED stop/tail, arrow turn and back-up lights with vertical Cast 3 housing and weatherproof connectors.	$1,888
5150-0057	Whelen 600 series LED vertical mount tail lights. Includes LED stop/tail, arrow turn and back-up lights with vertical Cast 4 housing and weatherproof connectors.	$2,153
5150-0058	Federal Signal QuadraFlare LED vertical mount tail lights. Includes LED stop/tail, arrow turn and back-up lights with vertical Cast 4 housing and weatherproof connectors.	$1,180

5150-0059	Federal Signal QuadraFlare LED vertical mount tail lights. Includes LED stop/tail, arrow turn and back-up lights with vertical Cast 3 housing and weatherproof connectors.	$1,030
5150-0060	Federal Signal QuadraFlare LED vertical mount tail lights. Includes LED stop/tail, turn and back-up lights with vertical Cast 3 housing and weatherproof connectors.	$1,127
5150-0061	Federal Signal QuadraFlare LED horizontal mount taillights. Includes LED stop/tail, turn and backup lights with horizontal Cast 3 housing and weatherproof connectors.	$1,030
5150-0062	Federal Signal QuadraFlare LED horizontal mount taillights. Includes LED stop/tail, arrow turn and backup lights with horizontal Cast 3 housing and weatherproof connectors.	$1,200
5150-0063	Double chrome trim ring for Weldon 1010 tail lights (PR).	$249
5150-0068	Marker lights Britax LED amber/red rubber housed mounted on the rear body corners angled down.	$365
5150-0071	Light Whelen model PSR00XRR LED (EA) red 3rd brake light. Location: [#LOC].	$177
5150-0073	Marker lights additional red LED Whelen Model 50R00MRR (PR). Location: [#LOC]	$227
5150-0074	Marker lights additional amber LED Whelen Model 50A00MAR (PR). Location: [#LOC]	$227
5150-0075	Whelen 600 series LED vertical mount taillights. Includes LED stop/tail, arrow turn and backup lights with individual chrome flanges and weatherproof connectors.	$2,553
5150-0076	Whelen 700 LED auxiliary chevron turn signal (PR) with 15 degree castings. Location: [#LOC]	$667
5150-0077	Whelen 900 series LED tail lights. Includes LED stop/tail, arrow turn and back-up lights with weatherproof connectors.	$4,604
5150-0078	Truck-Lite model #35720 guards for front LED clearance lights on cab.	$84
5150-0080	Weldon auxiliary turn signal model 9186-8580 LED (PR). Location: [#LOC].	$254
5150-0081	Light Whelen 500 model 5SR00XRR red LED 3rd brake light (ea). Location: [#LOC].	$199
5150-0082	Whelen 600 series LED vertical mount taillights. Includes LED stop/tail, arrow turn in vertical Cast 3 housing with 900 series halogen backup lights down low and weatherproof connectors.	$1,572
5150-0084	Weldon LED vertical mount taillights. Includes LED stop, tail, sequential turn and halogen backup lights with vertical 3 housing and weatherproof connectors.	$1,068
5150-0086	Marker light LED body/cab package. E-ONE custom cab with aerial ladder, Mid-Mount platform or Bronto bodies only. Outer cab roof lights to be Weldon model 5060.	$1,291
5150-0087	Weldon LED vertical mount taillights. Includes LED stop, tail, sequential turn and halogen backup lights with vertical 4 housing and weatherproof connectors.	$1,068
5150-0091	Whelen M6 series LED vertical mount tail lights. Includes LED stop/tail, arrow turn and back-up lights with vertical 4 light housing and weatherproof connectors.	$1,497
5150-0098	Truck-Lite auxiliary turn signal model 60117Y LED (PR) with model 60719 stainless steel cover. Location: [#LOC].	$243
5150-0099	LED marker light cab and body package. E-ONE custom cab and SS body vehicles.	$1,210
5150-0101	Whelen M9 series LED taillights. Includes LED stop/tail, arrow turn and backup lights with weatherproof connectors.	$3,144
5150-0102	Whelen M6 series LED vertical mount tail lights. Includes LED stop/tail, arrow turn and back-up lights with vertical 3 light housing and weatherproof connectors.	$1,376
5150-0107	Whelen arrow turn signals, front and rear as applicable, to be set to sequential flash pattern.	$21
5150-0120	Whelen 600 LED auxiliary arrow turn signal (PR) with 15 degree castings. Location: [#LOC].	$608
5150-0122	Marker lights addtional red LED Trucklite Model 15 (PR). Location: [#LOC].	$92
5150-0123	Marker lights addtional amber LED Trucklite Model 15 (PR). Location: [#LOC].	$92
5150-0124	The amber LED marker light on each side front of body just in front of rear wheels shall be upgraded to an amber Trucklite LED clearance/auxiliary turn light IPOS (clearance only no turn).	$164
5150-0127	Whelen M6 series LED vertical mount tail lights. Includes LED stop/tail, arrow turn lights with vertical 3 light housing (PR) with M9LZC Super LED scene lights (PR), with chrome flanges and weatherproof connectors.	$2,350
5150-0129	Whelen M6 series LED horizontal mount tail lights. Includes LED stop/tail, arrow turn and back-up lights individually mounted with weatherproof connectors.	$1,376
5150-0130	License plate light LED with chrome housing located at the rear of the body driver side down low.	$122
5150-0133	License plate light LED with chrome housing located at the rear of the body below B1 entry door.	$122
5150-0134	License plate light incandescent with chrome housing located at the rear of the body.	$122
5200-0000	Breaker box 8 place single phase. Includes main breaker. Note: Main breaker occupies 2 places leaving 6 available. Locate [#LOC].	$774
5200-0001	Breaker box 12 place single phase. Includes main breaker. Note: If gen is 6KW or less, main will occupy 2 places leaving 10 available. Locate [#LOC].	$809
5200-0002	Breaker Box 20 Place Single Phase. Includes main breaker. Locate [#LOC].	$824
5200-0003	Breaker box 2 place single phase (70A 110/220V). Location [#LOC].	$344
5200-0008	Breaker box 16 place single phase. Includes main breaker. Locate [#LOC].	$813
5250-0003	Generator Onan 6KW diesel. Requires fuel pick up option in chassis and 3rd party testing. Generator location: [#LOC].	$13,881
5250-0005	Generator Onan 6KW hydraulic. Includes generator control / PTO engage switch and a gauge panel located adjacent to breaker box. Generator location: [#LOC].	$11,872

5250-0006	Generator Onan 8KW hydraulic. Includes generator control/PTO engage switch and a gauge panel located adjacent to circuit breaker box. Generator location: [#LOC].	$13,362
5250-0007	Generator Onan 10KW hydraulic. Includes generator control / PTO engage switch and a gauge panel located adjacent to breaker box. Generator location: [#LOC].	$13,875
5250-0008	Generator Harrison 15KW MPC hydraulic. Includes generator control / PTO engage switch and a gauge panel located adjacent to breaker box. Generator location: [#LOC].	$23,003
5250-0009	Generator Harrison 20KW MPC hydraulic. Includes generator control / PTO engage switch and a gauge panel located adjacent to breaker box. Generator location: [#LOC].	$24,851
5250-0012	Generator Onan 15KW hydraulic. Includes generator control/PTO engage switch and a gauge panel located adjacent to circuit breaker box. Generator location: [#LOC].	$20,040
5250-0013	Generator Onan 20KW hydraulic. Includes generator control / PTO engage switch and a gauge panel located adjacent to breaker box. N/A on units with a water pump due to frequency fluctuations. Generator location: [#LOC].	$32,858
5250-0017	Generator Honda EM5000SXK with 4.5KW continuous output. Generator location: [#LOC].	$5,620
5250-0026	Generator Smart Power 10KW hydraulic model ER110. Includes generator control / PTO engage switch and a gauge panel located adjacent to breaker box. Generator location: [#LOC].	$15,828
5250-0036	Generator Smart Power 6KW hydraulic model HR-6 (with top mount cooler). Includes generator control / PTO engage switch and a gauge panel located adjacent to breaker box. Generator location: [#LOC].	$12,605
5250-0037	Generator Smart Power 8KW hydraulic model HR-8 (with top mount cooler). Includes generator control/PTO engagement switch and a gauge panel located adjacent to the circuit breaker box. Generator location: [#LOC].	$14,405
5250-0038	Generator Smart Power 10KW hydraulic model HR-110 (with top mount cooler). Includes generator control / PTO engage switch and a gauge panel located adjacent to breaker box. Generator location: [#LOC].	$15,828
5250-0039	Generator Harrison 10KW MCR hydraulic. Includes generator control/PTO engage switch and a gauge panel located adjacent to breaker box. Generator location: [#LOC].	$14,977
5250-0040	Generator Harrison 6KW MCR hydraulic. Includes generator control / PTO engage switch and a gauge panel located adjacent to breaker box. Generator location: [#LOC].	$11,665
5250-0041	** Obsolete discontinued 6/01/12 use 5250-0123** Generator Honda EM3800SX with 3.3KW continuous output. Generator location: [#LOC].	$5,091
5250-0043	Dealer installed generator. Option includes space only. Dealer responsible for NFPA required 3rd party generator testing.	$272
5250-0047	Generator Smart Power 15KW hydraulic model HR-15 (with top mount cooler). Includes generator control / PTO engage switch and a gauge panel located adjacent to breaker box. Generator location: [#LOC].	$21,055
5250-0050	Generator Smart Power 20KW hydraulic model HR-20 (with top mount cooler). Includes generator control / PTO engage switch and a gauge panel located adjacent to breaker box. Generator location: [#LOC].	$23,149
5250-0051	Locate generator gauge panel on pump operators panel ipo next to breaker box.	$110
5250-0055	Generator Smart Power 8KW hydraulic model ER8. Includes generator control / PTO engage switch and a gauge panel located adjacent to breaker box. Generator location: [#LOC]	$17,057
5250-0060	Dealer installed Onan 6KW diesel generator located [#LOC]. Option includes space only. Dealer responsible for NFPA required 3rd party generator testing.	$272
5250-0061	Dealer installed Onan 6KW hydraulic generator located [#LOC]. Option includes space only. Dealer responsible for NFPA required 3rd party generator testing.	$272
5250-0062	Dealer installed Onan 8KW hydraulic generator located [#LOC]. Option includes space only. Dealer responsible for NFPA required 3rd party generator testing.	$272
5250-0063	Dealer installed Onan 10KW hydraulic generator located [#LOC]. Option includes space only. Dealer responsible for NFPA required 3rd party generator testing.	$272
5250-0064	Dealer installed Onan 15KW hydraulic generator located [#LOC]. Option includes space only. Dealer responsible for NFPA required 3rd party generator testing.	$272
5250-0065	Dealer installed Onan 20KW hydraulic generator located [#LOC]. Option includes space only. Dealer responsible for NFPA required 3rd party generator testing.	$272
5250-0066	Dealer installed Smart Power 10KW hydraulic model ER110 generator located [#LOC]. Option includes space only. Dealer responsible for NFPA required 3rd party generator testing.	$272
5250-0067	Dealer installed Smart Power 10KW hydraulic model HR110 generator located [#LOC]. Option includes space only. Dealer responsible for NFPA required 3rd party generator testing.	$272
5250-0068	Dealer installed Smart Power 6KW hydraulic model HR-6 (with top mount cooler) generator located [#LOC]. Option includes space only. Dealer responsible for NFPA required 3rd party generator testing.	$272
5250-0069	Dealer installed Smart Power 8KW hydraulic model HR-8 (with top mount cooler) generator located [#LOC]. Option includes space only. Dealer responsible for NFPA required 3rd party generator testing.	$272

5250-0070	Dealer installed Smart Power 15KW hydraulic model HR-15 (with top mount cooler) generator located [#LOC]. Option includes space only. Dealer responsible for NFPA required 3rd party generator testing.	$272
5250-0071	Dealer installed Smart Power 20KW hydraulic model HR-20 (with top mount cooler) generator located [#LOC]. Option includes space only. Dealer responsible for NFPA required 3rd party generator testing.	$272
5250-0072	Dealer installed Harrison 6KW MCR hydraulic generator located [#LOC]. Option includes space only. Dealer responsible for NFPA required 3rd party generator testing.	$272
5250-0073	Dealer installed Harrison 10KW MCR hydraulic generator located [#LOC]. Option includes space only. Dealer responsible for NFPA required 3rd party generator testing.	$272
5250-0074	Dealer installed Harrison 30KW MPC hydraulic generator located [#LOC]. Option includes space only. Dealer responsible for NFPA required 3rd party generator testing.	$272
5250-0075	Guarded generator PTO engage toggle switch. Located driver side cab switch panel. For use on Typhoon X and CIIX cabs only.	$179
5250-0076	Guarded PTO engage rocker switch. Located driver side cab switch panel. For use on Quest, CIIX LTH aerial and commercial cabs.	$179
5250-0077	Generator Harrison 8KW MCR hydraulic. Includes generator control / PTO engage switch and a gauge panel located adjacent to breaker box. Generator location: [#LOC].	$14,813
5250-0078	Generator Smart Power 10KW hydraulic Liberator model Li15 (with top mount cooler and XRT hyd tool pump). Includes generator control / PTO engage switch and a gauge panel located adjacent to breaker box. Generator location: [#LOC].	$24,464
5250-0081	** Obsolete discontinued 6/01/12 use 5250-0123** Generator Honda EM3800SX with 3.3KW continuous output. NFPA rated at 2.5KW. Generator location: [#LOC].	$5,091
5250-0092	Generator Honda EM5000SXK with 4.5KW continuous output. NFPA rated at 3.3KW. Generator location: [#LOC].	$5,091
5250-0094	Harrison gas powered 5.5KW generator. Includes alternator duct and attached fuel tank. Locate in compartment [#LOC].	$3,863
5250-0106	Westerbeke 10KW BTDAR diesel single phase generator and XRT Hydraulic tool system with 3 tool capability. 10,500 PSI system. Includes selector valve for each reel, hyd res / filter and remote cooler. Requires fuel pick up option in chassis and 3rd party testing. Locate in dunnage pan offset to officer side. Route (4) lead lines to B1 compt.	$42,532
5250-0111	Westerbeke 10KW BTDAR diesel single phase generator and XRT Hydraulic tool system with 2 tool capability. 10,500 PSI system. Includes selector valve for each reel, hyd res / filter. Requires fuel pick up option in chassis and 3rd party testing. Locate in [#LOC]. Route (4) lead lines to B1 compt.	$42,532
5250-0115	Generator Harrison 15KW MPC hydraulic w/IHT. Includes tool circuit manifold, aux heat exchanger, generator control / PTO engage switch and a gauge panel located adjacent to breaker box. [#LOC]	$30,874
5250-0116	Dealer installed Powertech 8KW diesel generator located [#LOC]. Option includes space only. Dealer responsible for NFPA required 3rd party generator testing.	$272
5250-0118	Generator Harrison 8KW LPG hydraulic. Includes generator control switch to engage the PTO and start the generator and a gauge panel located adjacent to breaker box. Generator location: [#LOC].	$14,536
5250-0119	Generator Harrison 8KW MCR hydraulic w/IHT. Includes tool system manifold, aux heat exchanger, generator control / PTO switch, tool sytem / PTO switch, (both switches accessible by driver) and a generator gauge panel located adjacent to breaker box. Generator location: [#LOC].	$24,625
5250-0123	Generator Honda EM4000 with 3.5KW continuous output. NFPA rated at 3.3KW. Generator location: [#LOC].	$5,091
5250-0124	Generator Smart Power 6KW hydraulic model LR-6 Light Rescue Series (FORD 250, 350, 450, 550 Chassis). Includes generator control / PTO engage switch and a gauge panel located adjacent to breaker box. Generator location:[#LOC].	$13,336
5250-0125	Generator Harrison 10KW LPG hydraulic. Includes generator control/PTO engage switch and a gauge panel located adjacent to breaker box. Generator location: [#LOC].	$14,977
5250-0128	Generator Smart Power 15KW hydraulic Liberator model Li20 (with top mount cooler and XRT hyd tool pump). Includes generator control switch and a gauge panel located adjacent to breaker box. Generator location: [#LOC].	$28,552
5250-0130	Generator Harrison 6KW MDS hydraulic w/IHT for continuous accessory. Includes aux hyd system manifold, integral aux heat exchanger, generator control / PTO switch, aux system / PTO switch, (both switches accessible by driver) and a generator gauge panel located adjacent to breaker box. Generator location: [#LOC].	$23,257
5250-0132	Generator Harrison 8KW MDS hydraulic w/IHT for continuous accessory. Includes aux hyd system manifold, integral aux heat exchanger, generator control / PTO switch, aux system / PTO switch (both switches accessible by driver), and a generator gauge panel located adjacent to breaker box. Generator location: [#LOC].	$25,021

5250-0133	Generator Harrison 10KW MDS hydraulic w/IHT for continuous accessory. Includes aux hyd system manifold, integral aux heat exchanger, generator control / PTO switch, aux system / PTO switch (both switches accessible by driver), and a generator gauge panel located adjacent to breaker box. Generator location: [#LOC].	$26,007
5250-0134	Generator Harrison 6KW LPG hydraulic with remote mounted reservoir. Includes generator control / PTO engage switch and a gauge panel located adjacent to breaker box. Generator location: [#LOC].	$15,302
5250-0135	Generator Harrison 10KW MCR hydraulic w/IHT for continuous accessory. Includes aux hyd system manifold, aux heat exchanger, generator control / PTO switch, aux system / PTO switch, (both switches accessible by driver) and a generator gauge panel located adjacent to breaker box. Generator location: [#LOC].	$23,530
5255-0000	3rd party generator testing without pump.	$620
5255-0001	3rd party generator test with pump.	$82
5260-0000	Generator air deflector for Onan hydraulic. When generator is compartment mounted or mounted in a pan on an aerial body, engineering is to specify updraft or downdraft.	$405
5260-0001	Remote start for diesel generator. Location: [#LOC].	$381
5260-0002	Remote control starting kit for Honda EM3800SX, EM4000, EM5000SX and EM6500SX generators. Locate [#LOC].	$658
5260-0004	Generator prewire for dealer supplied and installed 5 KW portable generator. Includes 12 volt wiring and cable between breaker box. Prewire to [#LOC].	$247
5260-0006	Compartment door(s) of compartment mounted generator to have interlock.	$184
5260-0008	Generator prewire for dealer supplied and installed 6.5KW portable generator. Includes 12volt wiring and cable between breaker box. Prewire to [#LOC].	$302
5260-0014	Oil drain valve with tube extending below officer side pump panel.	$193
5260-0017	Compartment door(s) of compartment mounted compressor to have interlock.	$184
5260-0018	Diamond plate generator shield (3) sided. Forward, rearward and outboard sides w/2" space between generator and shield. Outboard side to have slots for hot air exhaust.	$594
5260-0020	Compartment door(s) of compartment mounted electric dump valve to have interlock.	$184
5260-0021	Oil drain valve with tube extending below driver side pump panel.	$193
5260-0024	Locate generator gauge panel on the pump operators panel in lieu of standard location adjacent to breaker box.	$110
5260-0025	Generator prewire for dealer supplied and installed 3.5 KW portable generator (Honda or other with equivalent dimensions). Includes 12 volt wiring and A/C cabling to breaker box. Prewire to [#LOC].	$247
5260-0033	Diamond plate guard to protect the generator's wiring and harnesses in the dunnage pan. The guard will go full height of the dunnage pan, forward to rear, separating the generator and breaker box from the other side (driver's side) of the dunnage pan.	$307
5260-0034	Veritcal exhaust for Harrison MCR and MPC generators 6KW - 20KW.	$469
5300-0000	Light bar Code 3 model XL5100 (PR) 22" Long. All red lens. Location: [#LOC]	$1,127
5300-0003	Light bar Code 3 model 556A3 56" long with all red lenses. Location: Centered on the front cab roof	$1,551
5300-0004	Light bar Code 3 model 718A1 (PR) 18" Long. Red Upper / Clear Lower lens. Location: [#LOC].	$1,270
5300-0011	Light bar Federal Signal ViewPoint. Two (2) 20" light bars LED 3 pod. Lenses shall be all red. Location: [#LOC]	$2,398
5300-0012	Light bar Federal Signal ViewPoint. Two (2) 20" light bars LED 3 pod. Lenses shall be Red/White/Red - Red/White/Red. Location: [#LOC].	$2,659
5300-0013	Light bar Federal Signal ViewPoint. Two (2) 26.5" 4 pod LED light bars. Lenses to be all red. Location: [#LOC].	$2,844
5300-0014	Light bar Federal Signal ViewPoint. Two (2) 26.5" 4 pod LED light bars. Lenses to be R/R/W/R R/W/R/R. Location: [#LOC].	$3,166
5300-0015	Light bars Federal Signal ADX2201 LED (PR) with red lenses. Location: [#LOC].	$2,810
5300-0017	Light bar Federal Signal Jet Stream 48" LED with R/W/R lenses, red diodes and single traffic clearing light. Location: Centered on the front cab roof	$2,305
5300-0021	Light bar Federal Signal JetSolaris 60" LED. Red Solaris reflectors with clear domes. NFPA compliant. Does not require 2 addl side facing bars. Location: Centered on the front cab roof.	$2,437
5300-0023	Light bars Federal Signal 22I (PR). Location: [#LOC].	$1,017
5300-0024	Light bar Federal Signal Aerodynic 25RQL-Fast 52" with red/clear lens. Location: Centered on the front cab roof.	$1,413
5300-0025	(Obsolete) Light bar Federal Signal Aerodynic 25RQL-TCLF 52" with red/clear lens. Location: Centered on the front cab roof	$1,413
5300-0026	Light bar Federal Signal Aerodynic ADL5202 52" with red/clear/red lens. Location: Centered on the front cab roof.	$1,335
5300-0028	Light bar Federal Signal Aerodynic ADX5271 52" with 10 red Solaris LED reflectors. Location: Centered on the front cab roof	$2,706

5300-0029	Light bar Federal Signal AeroDynic ADX7201 72" with 8 red Solaris LED reflectors. Location: Centered on the front cab roof.	$2,835
5300-0030	Light bar Federal Signal Aerodynic AH1LC 72" with red/clear lens. Location: Centered on the front cab roof.	$1,703
5300-0031	Light bar Federal Signal Aerodynic AH2LC 72" with red/clear lens. Location: Centered on the front cab roof	$1,771
5300-0035	Light bar Federal Signal Viewpoint. Two (2) 20" 3 pod light bars. Location: [#LOC]	$1,382
5300-0036	Light bar Federal Signal Viewpoint. Two (2) 26.5" 4-pod light bars. Location: [#LOC]	$1,729
5300-0044	Light bar Federal Signal Vector VC6001. Location: Centered on the front cab roof	$1,998
5300-0047	Light bar Whelen model 9M380NQ66 w/MKEZ7 mounts. Location: Centered on the front cab roof.	$2,575
5300-0048	Light bar Whelen Centurion model C300700N 72". Location: Centered on the front cab roof	$1,572
5300-0049	Light bar Whelen Edge model 9M380NV 66" with MKEZ7 mounts. Location: Centered on the front cab roof	$2,946
5300-0050	Light bar Whelen Edge model 9M387NQ 72" with MKEZ7 mounts without rear facing strobes. N/A on INTL Chassis. Location: Centered on the front cab roof	$2,709
5300-0051	Light bar Whelen model 9M387NV 72" all strobe with MKEZ7 mounts. N/A with Vista roof with front facing windows. N/A on INTL Chassis. Location: Centered on the front cab roof	$2,709
5300-0052	Light bar Whelen Edge model 9MINNFPA 28 1/4" with MK9 mounts. All strobe light bar. Location: [#LOC]	$2,744
5300-0053	Light bar Whelen Freedom model FN66QLED 66" with MKEZ7 mounts. All LED light bar without rear facing LEDs. Location: Centered on the front cab roof.	$3,489
5300-0055	Light bar Whelen Freedom model FN72QLED 72" LED with MKEZ7 mounts and clear lenses. Location: Centered on the front cab roof.	$3,579
5300-0056	Light bar Whelen Freedom model FN72VLED 72" LED with MKEZ7 mounts. N/A INTL Chassis or Vista roofs with front facing windows. Location: Centered on the front cab roof.	$3,579
5300-0059	Light bar Whelen model 9MINNFPA 28 1/4" strobe with MKEZ7 mounts (PR). Location: [#LOC]	$2,744
5300-0060	Light bar Code 3 model 574NFPA1 74" with all red lenses. Location: Centered on the front cab roof.	$1,794
5300-0065	Light bar Federal Signal ADX2202 LED (PR) with red lenses. Located side facing only. Not NFPA compliant forward facing. Location: [#LOC].	$1,742
5300-0070	Light bar Federal Signal JetStream JLX5401 LED 54". Red Solaris reflectors with red domes. Location: Centered on the front cab roof	$2,086
5300-0074	Whelen Mini-Freedom LED light bars (PR) model FNMINI 24" with low profile MK9 mounts. Location: [#LOC].	$4,047
5300-0075	Federal Signal Viewpoint FV2232-SAO light bar. Two (2) 20" 3 pod light bars with red/clear/red pods. Location: [#LOC]	$1,216
5300-0076	Whelen Mini-Freedom LED side facing light bars (PR) model FT8RRRRF 24" with low profile MK9 mounts. Location: [#LOC]. Lense colors: Clear.	$3,877
5300-0082	Whelen Mini-Freedom LED side facing light bars (PR) model FT8RRRRF 24" with MKEZ7 mounts. Location: [#LOC]. Lens color: Clear.	$3,877
5300-0084	Whelen Mini-Freedom LED light bars (PR) model FNMINI 24" with red/clear lenses and MKEZ7 mounts. Location: [#LOC].	$4,047
5300-0085	Federal Vector SL LED Lightbar Model 545NFPA60L2 60". Includes (12) six LED red Solaris reflectors and (4) six LED white Solaris LED reflectors.	$3,586
5300-0086	Light bar Code 3 MX model 758A1. Upper deck contains (4) rotators (2 ea side) with red lenses and (2) clear oscilasers. Lower deck contains (2) frt red halogen flashers outboard, intersection sweeps and clear lenses. Loc: Centered on the frt cab roof.	$1,731
5300-0087	Light bar Code 3 model XL5100 22" Long. All red lens. Location: Centered on the front cab roof.	$565
5300-0088	Light bar Whelen Freedom model FN55VLED 55" LED with MKEZ7 mounts. N/A with Vista roofs with front facing windows. Location: Centered on the front cab roof.	$3,161
5300-0089	Light bar Code 3 MX model 769A1. Upper deck contains 9 rotators w/ red lenses. Lower deck contains intersection sweeps w/clear lenses. Location: Centered on the front cab roof.	$1,792
5300-0090	(OBSOLETE) Light bar Federal Signal Streethawk SHL6558 65" with red/clear lens. Includes (2) 175 FPM rotators outboard and (2) 175 FPM rotators inboard. Location: Centered on the front cab roof	$1,166
5300-0091	Light bar Code 3 Excalibur model X58A. Upper deck contains (4) rotators (two ea side) with red lenses and (2) white oscilasers with clear lenses. Lower deck contains (4) takedown lights and two alley lights. Location: Centered on the front cab roof.	$1,966
5300-0092	Light bar Whelen Freedom model FN55QLED 55" LED with takedown lights and MKEZ7 mounts. Location: Centered on the front cab roof.	$3,425
5300-0093	Light bar Whelen Freedom model FN72VLED 72" LED with Opticom and MKEZ7 mounts. N/A INTL Chassis or Vista roofs with front facing windows. Location: Centered on the front cab roof.	$5,989
5300-0094	Light bar Federal Signal 22I (ADL2201Y) with 175 FPM rotators (PR). Location: [#LOC]	$1,017
5300-0095	Light bar Code 3 MX model 769 with R/C/C/C/B lenses. Upper deck contains 9 rotators. Lower deck contains intersection sweeps w/clear lenses. Location: Centered on the front cab roof.	$1,792

5300-0096	Light bar Code 3 Javelin LED model JX67A. Location: Centered on the front cab roof.	$6,019
5300-0097	Light bars Federal Signal Vector/ViewPoint. One (1) center 21" 3 pod and two (2) side 26.5" 4 pod LED light bars. Lenses to be R/R/W/R R/R/R R/W/R/R. Location: "V" centered on the front cab roof.	$4,066
5300-0099	Light bar Federal Signal JLX21 LED (PR). Located side facing only. Location: [#LOC].	$1,707
5300-0100	Light bar Whelen Freedom model FN72QLED 72" LED with clear lenses and MKEZ7 mounts. Includes (8) red LED and (2) white LED. N/A INTL Chassis. Location: Centered on the front cab roof.	$3,978
5300-0101	Light bar Federal Signal Aerodynic ADL5202 52" with blue lenses. Location: Centered on the front cab roof.	$1,335
5300-0102	Whelen Mini-Freedom LED side facing light bars (PR) model FT8RCRCF 24" with MKEZ7 mounts. Location: [#LOC]. Lense colors: Clear.	$3,847
5300-0105	Light bar Code 3 model 718A1 (PR) 18" Long. Red upper/clear lower lens driver side and blue upper/clear lower officer side. Location: [#LOC]	$1,099
5300-0106	Light bar Code 3 MX model 769 with B/B/C/R/R upper lenses clear lower lenses. Upper deck contains (8) rotators; (4) each side and alley lights. Lower deck contains intersection sweeps, (4) LED warning; (2) blue driver and (2) red officer. Includes pre-wire for opticom in the center of the upper deck. Location: Centered on the front cab roof. Requires 5300-0105.	$3,218
5300-0110	Light bar Whelen Freedom model FN72QLED 72" LED with MK8H high mounts. Includes (12) red LED and (2) white LED. N/A INTL Chassis. Location: Centered on the front cab roof.	$5,026
5300-0111	Whelen Mini-Freedom LED side facing light bars (PR) model FT8RRRRF 24" with MK8H high mounts. Location: [#LOC]. Lens colors: Clear.	$4,059
5300-0112	(Obsolete from Vendor)Light bar Code 3 Model 2169NFPA1 LED. Location: Centered on the front cab roof.	$3,368
5300-0113	Light bar Whelen Freedom model FL2RRRRF 72" LED with MKEZ7 mounts. Includes (10) red LEDs and (4) blue LEDs. N/A INTL Chassis. Location: Centered on the front cab roof.	$4,775
5300-0114	Light bars Federal Signal Vector/ViewPoint. One (1) center 21" 3 pod and two (2) side 26.5" 4 pod light bars. Lenses to be R/R/W/R-R/W/R-R/W/R/R. Location: "V" centered on the front cab roof.	$2,617
5300-0115	Light bar Federal Signal Viewpoint. Two (2) 26.5" 4 pod light bars with red lenses. Location: [#LOC]	$1,634
5300-0117	Light bar Code 3 model 729A (PR) 29" long. Red upper / clear lower lens. Location: [#LOC]	$3,223
5300-0118	Light bar Code 3 MX model 769A with R/W/W/W/R upper lenses and clear lower lenses. Upper deck contains (6) rotators and 3-M Opticom. Lower deck contains intersection sweeps, (6) red LED warning and (4) white LED warning. Location: Centered on the front cab roof.	$6,675
5300-0121	Light bars Federal Signal Vector/ViewPoint. One (1) center 21" 3 pod with 3M 792 Opticom and two (2) side 26.5" 4 pod light bars. Lenses to be R/R/W/R-W/W/W-R/W/R/R. Location: "V" centered on the front cab roof.	$4,747
5300-0124	Light bar Federal Signal ViewPoint. Two (2) 26.5" 4 pod LED light bars configured for use w/vista roof that has front windows. Lenses to be R/R/W/R R/W/R/R. Location: [#LOC]	$2,984
5300-0126	Light bar Whelen Freedom model FN72VLED 72" LED with 795H Opticom, (12) red LEDs, (2) clear LEDs and MKEZ7 mounts. N/A INTL Chassis or Vista roofs with front facing windows. Location: Centered on the front cab roof.	$7,328
5300-0128	Federal ADX7250 LED Light bar 72". Includes (12) Solaris 6-LED red reflectors, (4) Solaris 9-LED red reflectors, and (12) Solaris 6-LED white reflectors. Includes (2) flashers, (1) for red LEDs and (1) for white LEDs.	$4,436
5300-0129	Light bar Federal Signal ADX2205 LED (PR). Location: [#LOC]	$4,839
5300-0130	Light bar Whelen Freedom model FN82VLED 82" LED with 3M Opticom and MKEZ7 mounts. N/A INTL Chassis or Vista roofs with front facing windows. Location: Centered on the front cab roof	$5,720
5300-0131	Light bar Whelen model FFX2068 19" LED. Location: Centered front of cab below windshield	$1,535
5300-0132	Light bar Federal Signal ViewPoint. Two (2) 26.5" 4 pod LED light bars. Lenses to be R/R/W/R R/W/G/R. Location: [#LOC]	$3,313
5300-0136	Light bar Federal Signal 22I (PR) red/blue lenses. Location: [#LOC]	$1,017
5300-0137	Light bar Whelen Freedom model FN72VLED 72" LED with Opticom and MKEZ7 mounts. Includes (10) red LED and (2) white LED. N/A INTL Chassis. Location: Centered on the front cab roof.	$6,789
5300-0138	Light bar package, Federal Signal Escape LED (5) bar package. Includes: (1) 40" LED front bar w/ Opticom, (2) diagonal 26" LED bars and (2) 28" side LED bars.	$10,644
5300-0139	Light bars Federal Signal Vector/ViewPoint. One (1) center 21" 3 pod and two (2) side 26.5" 4 pod LED light bars configured for use w/vista roof that has front windows. Lenses to be R/R/W/R R/R/R R/W/R/R. Location: "V" centered on the front cab roof.	$3,886
5300-0140	Light bar Whelen Freedom model FN72QLED 72" LED with MK8 high mounts. Includes (10) red LED and (4) white LED. N/A INTL Chassis. Location: Centered on the front cab roof.	$5,030
5300-0141	Light bar Code 3 model 574A1 74" with all red lenses. Location: Centered on the front cab roof.	$2,026

5300-0142	Light bar Federal Signal JetStream 60" LED. Red/White Solaris reflectors with clear domes. NFPA Compliant, does not require 2 addl side facing bars. Location: Centered on the front cab roof.	$2,581
5300-0143	Mounting brackets for Federal Signal Vector or Viewpoint lightbars. Height from top of cab to bottom of lightbar to be approx. 4".	$140
5300-0144	Light bar Whelen Edge model 9M387NQ 72" with MKEZ7 mounts, pre-wire for Opticom and without rear facing strobes. N/A on INTL Chassis. Location: Centered on the front cab roof	$2,961
5300-0145	Federal ADX7204 LED Lightbar 72". Includes (12) Solaris 9-LED red reflectors and Opticom. Location: Centered on the front cab roof.	$5,374
5300-0146	Light bar Whelen Freedom model FN72QLED 72" LED with MKEZ7 mounts. Includes (6) red LED, (2) blue LED and (2) white LED. N/A INTL Chassis. Location: Centered on the front cab roof. Lens color: Clear.	$3,978
5300-0147	(Obsolete from Vendor)Light bar Code 3 LED model 2122NFPA1 (PR) 22.5" Long. All red with clear lens. Location: [#LOC].	$4,030
5300-0148	Light bar Whelen model 9MMEDFFD 28 1/4" strobe with MK9 mounts (PR). Lense colors to be RRCR (front to rear). Location: [#LOC]	$2,514
5300-0149	Light bar Federal Signal ViewPoint with 3M Opticom. Two (2) 26.5" 4 pod LED light bars model 535NFPA8P20. Lenses to be Red\Blue\Red\White Opticom\Red\Blue\Red. Location: [#LOC]	$5,080
5300-0150	Light bar Federal Signal ViewPoint. Two (2) 26.5" 4 pod LED light bars. Lenses to be R/B/R/B B/R/B/R. Location: [#LOC]	$2,844
5300-0151	Light bar Whelen Freedom model FN66VLED 66" with MKEZ7 mounts. All LED light bar. Location: Centered on the front cab roof	$3,489
5300-0152	Light bar Whelen Freedom model FN72QLED 72" LED with Opticom and MKEZ7 mounts. Includes (6) red LED, (4) Blue LED and (2) white LED. N/A INTL Chassis. Location: Centered on the front cab roof.	$6,762
5300-0154	Light bar Federal Signal JetStream 60" LED. Red Solaris reflectors and red domes with clear center and 3M 792 Opticom. NFPA Compliant, does not require 2 addl side facing bars. Location: Centered on the front cab roof	$6,240
5300-0155	Federal ADX5283 LED Lightbar 52" with clear domes. Includes (16) Solaris 6-LED red reflectors, (4) Solaris 6-LED white reflectors, TCL and Opticom. Includes (2) flashers, (1) for red LEDs and (1) for white LEDs.	$5,777
5300-0156	Light bar Federal Signal AeroDynic ADX7202 72" with (6) red and (2) white Solaris LED reflectors. Location: Centered on the front cab roof.	$2,985
5300-0157	Whelen Mini-Freedom LED light bars (PR) model FNMINI 24" with clear lenses and MKEZ7 mounts. Location: [#LOC].	$4,047
5300-0158	Light bar Whelen Freedom model FN72QLED 72" LED with 3M Opticom, clear lenses and MKEZ7 mounts. N/A INTL Chassis. Location: Centered on the front cab roof.	$5,787
5300-0159	Light bar Federal Signal ADX7202 72" with (6) red, (2) white Solaris LED reflectors and 3M Opticom. Location: Centered on the front cab roof	$4,890
5300-0160	Light bar Federal Signal JetSolaris 60" LED. Red Solaris reflectors with center traffic clearing light. NFPA compliant, does not require 2 addl side facing bars. Location: Centered on the front cab roof.	$2,511
5300-0161	Light bar Whelen Freedom model FN72VLED 72" LED with Opticom and MKEZ7 mounts. Includes (10) red LED, (2) white LED and (2) green LED. N/A INTL Chassis. Location: Centered on the front cab roof.	$7,528
5300-0162	Whelen Mini-Freedom LED side facing light bars (PR) model FT8RARRF driver and FT8RRARF officer 24" with MKEZ7 mounts. Location: [#LOC]. Lense colors: Clear.	$3,877
5300-0163	Light bar Whelen Freedom model FN72VLED 72" LED with offset Opticom and MKEZ7 mounts. N/A INTL Chassis or Vista roofs with front facing windows. Location: Centered on the front cab roof.	$5,989
5300-0164	Light bar package, Federal Signal Escape LED (5) bar package. Includes: (1) 40" LED front bar (RRWRR), (2) diagonal 26" LED bars (RWR) and (2) 28" side LED bars (RRR).	$8,198
5300-0165	Whelen Mini-Freedom LED side facing front cab light bars (PR) model FT8RRRRF 24" with MKEZ7 mounts. All red LEDs with clear lenses. For use on rear mount platforms with supplemental upper level Zone A warning lights. Locate one each side front cab corners side facing.	$3,877
5300-0166	Light bar Whelen Freedom model FN60VLED 60" LED with MKEZ7 mounts. N/A on Vista roofs with front facing windows. Location: Centered on the front cab roof	$4,492
5300-0167	Whelen Mini-Freedom LED side facing light bars (PR) model FT8RRRRF 28.25" with MKEZ7 mounts. Location: [#LOC]. Lense colors: Clear.	$4,896
5300-0168	Whelen Mini-Freedom LED side facing light bars (PR) model FT8RRRRF 24" with MKEZ7 mounts. Location: [#LOC]. Lense colors: Red.	$3,877
5300-0169	Light bar Whelen Freedom model FN72QLED 72" LED with red lenses and MKEZ7 mounts. Includes (8) red LED and (2) white LED. N/A INTL Chassis. Location: Centered on the front cab roof.	$3,978

5300-0170	Light bar Federal Signal ViewPoint. Two (2) 26.5" 4 pod LED light bars. Lenses to be R/Opticom/W/R R/W/G/R. Location: Front cab corners	$5,441
5300-0171	Light bar Federal Signal Aerodynic ADL5202 52" with driver red and officer blue lenses. Location: Centered on the front cab roof.	$1,335
5300-0172	Whelen Mini-Freedom LED side facing front cab light bars (PR) model FT8RRRRF 24" with MKEZ7 mounts. All red LEDs with red lenses. For use on rear mount platforms with supplemental upper level Zone A warning lights. Locate one each side front cab corners side facing.	$3,877
5300-0173	Light bar Whelen Freedom model FN72VLED 72" LED with MK8 high mounts. Includes (12) red LED, (2) amber LED and (4) white LED. N/A INTL Chassis or Vista roofs with front facing windows. Location: Centered on the front cab roof.	$5,803
5300-0174	Light bar Whelen Freedom model FN82VLED 82" LED with MKEZ7 mounts and red lenses. Includes (1) driver forward facing steady burn to meet California law. N/A INTL Chassis or Vista roofs with front facing windows. Location: Centered on the front cab roof	$4,226
5300-0175	Light bar Whelen Freedom model FN72QLED 72" LED with PE215 pre-emptor and MKEZ7 mounts. Includes (12) red LED and (2) white LED. N/A INTL Chassis. Location: Centered on the front cab roof.	$5,537
5300-0176	Light bar Whelen Freedom model FN72QLED 72" LED with MK8 high mounts. N/A INTL Chassis. Location: Centered on the front cab roof.	$3,579
5300-0177	Light bars Federal Signal Vector/ViewPoint. One (1) center 21" 3 pod with 3M 792 Opticom and two (2) side 26.5" 4 pod light bars configured for use w/vista roof that has front windows. Lenses to be R/R/W/R-R/Opticom/R-R/W/G/R. Location: "V" centered on the front cab roof.	$6,344
5300-0178	Light bar Federal Signal ViewPoint. Two (2) 20" light bars LED 3 pod. Lenses shall be blue/red/blue. Side facing only. Location: [#LOC].	$2,398
5300-0179	Light bar Federal Signal JLX21 LED red/blue(PR). Locate blue forward if side facing. Location: [#LOC]	$2,208
5300-0180	Light bar Federal Signal Escape LED model ESC 2202-NFPA (PR). Red / white with clear lenses. Location: [#LOC].	$3,149
5300-0182	Light bar (PR) Federal Signal Escape LED model ESC 2201P-NFPA (driver side) and ESC 2201D-NFPA (officer side). Red / white with clear lenses. Side facing only - not for use at front cab corners. Location: [#LOC].	$2,986
5300-0184	Whelen Mini-Freedom LED side facing light bars (PR) model FT8RCCRF 28.25" with R/C/C/R lenses and MKEZ7 mounts. Location: [#LOC]	$3,847
5300-0185	Light bar Whelen Freedom model FN72QLED 72" LED with clear lenses, MKEZ7 mounts and pre-wire for 3M opticom. Includes (8) red LED and (2) white LED. N/A INTL Chassis. Location: Centered on the front cab roof	$4,049
5300-0186	Light bar Whelen Freedom model FN72QLED 72" LED with pre-wire for 3M Opticom and MKEZ7 mounts. N/A INTL Chassis. Location: Centered on the front cab roof	$3,814
5300-0187	Light bar Whelen Freedom model FN72QLED 72" LED with clear lenses and MKH8 high mounts. Includes (8) red LED and (2) white LED. N/A INTL Chassis. Location: Centered on the front cab roof	$4,017
5300-0188	Light bar Whelen Freedom model FN72VLED 72" LED with Opticom and MK8 high mounts. N/A INTL Chassis or Vista roofs with front facing windows. Location: Centered on the front cab roof.	$6,031
5300-0189	Light bar Federal Signal ADX2201 LED with red lenses. Location: Centered on the front cab roof. Requires additional corner lightbars for NFPA compliance.	$1,406
5300-0190	Light bar Whelen Freedom model FN72QLED 72" LED with Opticom and MK8 high mounts. Includes (6) red LED, (4) Blue LED and (2) white LED. N/A INTL Chassis. Location: Centered on the front cab roof.	$6,801
5300-0192	Light bar Code 3 Model XP9588NFPA1 88" LED. All red with clear lenses. Not available on commercial cabs. Location: Centered on the front cab roof.	$4,431
5300-0193	Code3 model XP9501NFPA1 (PR) red LED with clear domes. Location: [#LOC].	$1,882
5300-0195	Light bar Federal Signal JetStream 60" LED. Red driver/Blue officer Solaris reflectors. Location: Centered on the front cab roof	$2,137
5300-0196	Whelen Mini-Freedom LED light bars (PR) model FNMINI 24" with red lenses and MK8 high mounts. Location: [#LOC].	$4,149
5300-0197	Light bar Whelen Freedom model FN72QLED 72" LED with GTT Opticom, red lenses and MKH8 high mounts. N/A INTL Chassis. Location: Centered on the front cab roof.	$5,834
5300-0198	Light bar Federal Signal ADX2215-SMV LED side facing (PR) with driver blue forward/red rearward and officer red forward/blue rearward facing lenses. Location: [#LOC].	$3,966
5300-0199	Light bar Whelen Freedom model FL2RRRR 72" LED with Opticom and MKEZ7 mounts. Includes (12) red LED. N/A INTL Chassis. Location: Centered on the front cab roof.	$6,765
5300-0202	Light bar Weldon Aero Maxx II 59" LED. NFPA Compliant, does not require 2 addl side facing bars. Location: Centered on the front cab roof	$2,777

5300-0203	Light bar Whelen Freedom model FN72QLED 72" LED with 3M 795H Opticom, (10) red LEDs, (2) clear LEDs and MK8 high mounts. For use with front vista windows. Location: Centered on the front cab roof.	$6,766
5300-0204	Federal ADX7262 LED Lightbar 72" with clear lenses. Includes (12) Solaris 6-LED red reflectors, (8) Solaris 6-LED blue reflectors, (4) Solaris 9-LED red reflectors, and a 3M Opticom. Includes (2) flashers, (1) for red LEDs and (1) for blue LEDs.	$5,405
5300-0205	Whelen Mini-Freedom LED side facing light bars (PR) model FT8CRRCF 28.25" with CRRC lenses and MKEZ7 mounts. Location: [#LOC].	$3,847
5300-0207	Federal ADX7250 LED Lightbar 72". Includes (12) Solaris 6-LED red reflectors, (4) Solaris 9-LED red reflectors, and (10) Solaris 6-LED white reflectors and Opticom. Includes (2) flashers, (1) for red LEDs and (1) for white LEDs.	$6,716
5300-0209	Federal ADX7265 LED Lightbar 72". Includes (10) Solaris 6-LED red reflectors, (10) Solaris 6-LED blue reflectors, (4) Solaris 9-LED red reflectors, and a 3M Opticom. Includes (2) flashers, (1) for red LEDs and (1) for blue LEDs.	$5,405
5300-0210	Whelen Mini-Freedom LED light bars (PR) model FNMINI 24" with red/clear lenses and MK8 high mounts. Location: [#LOC].	$4,149
5300-0211	Light bar Whelen Freedom model FN60QLED 60" LED with MKEZ7 mounts. Includes (8) red, (2) white and (2) amber modules. Location: Centered on the front cab roof	$4,577
5300-0212	Light bar Whelen Freedom model FN72VLED 72" LED with MKEZ7 mounts. Includes (10) red LED and (4) white LED. N/A INTL Chassis. Location: Centered on the front cab roof.	$4,654
5300-0213	Light bar Code 3 MX model 769NFPA1 with Opticom. Upper deck contains 5 rotators w/ red lenses. Lower deck contains 795H Opticom and intersection sweeps w/clear lenses. Location: Centered on the front cab roof.	$3,008
5300-0214	Light bar Whelen Freedom model FN72QLED 72" LED with GTT Opticom, clear lenses and MKH8 high mounts. N/A INTL Chassis. Location: Centered on the front cab roof	$5,834
5300-0215	Light bar Whelen Freedom model FL2RRRRF 72" LED with MK8H high mounts. Includes (10) red LEDs and (4) blue LEDs. N/A INTL Chassis. Location: Centered on the front cab roof.	$4,821
5300-0216	Light bar Whelen Freedom 72" LED with (8) red LEDs, (2) white LEDs, side facing LR11 alley lights, 3M Opticom, clear lenses and MKEZ7 mounts. N/A INTL Chassis. Location: Centered on the front cab roof	$6,088
5300-0217	Light bar Federal Signal AeroDynic ADX7205 72" with 12 red Solaris LED reflectors and 2 traffic clearing lts. Location: Centered on the front cab roof.	$3,277
5300-0219	Light bar Whelen Freedom model FL2RRRR 72" LED with MKEZ7 mounts and clear lenses. Includes (12) red LEDs, (2) clear LEDs and GTT Opticom. N/A INTL Chassis and vista cabs. Location: Centered on the front cab roof.	$5,956
5300-0220	Light bar Whelen Freedom 82" LED with MKEZ7 mounts and clear lenses. Includes (14) red LEDs and (2) LR11Takedown lights . N/A commercial Chassis. Location: Centered on the front cab roof	$5,047
5300-0232	Light bar Code 3 Excalibur model X69A. Upper deck contains (8) OPX-6 red LED modules and (1) LEDX modules in the center. Lower deck contains (10) OPX-6 red LED modules with a center mounted N-3 emitter. Lens color: Clear. Location: Centered on the front cab roof.	$5,288
5300-0233	Light bar Code 3 Excalibur 36". Upper contains (6) OPX-6 red LED modules. Lower contains (6) OPX-6 red LED modules. Lens color clear. Location: [#LOC].	$7,239
5300-0236	Light bar Federal Signal JLX2108-CNFPA LED (PR). Red Solaris reflectors with clear lenses. Location: [#LOC].	$2,031
5300-0244	Whelen Mini-Freedom LED side facing light bars (PR) model FT8RRRRF driver and FT8BBBBF officer 28.25" with MKEZ7 mounts. Location: [#LOC]. Lense colors: Clear.	$3,877
5300-0245	Whelen Mini-Freedom LED light bars (PR) model FT8RCRCF 28.25" with clear lenses and MKEZ7 mounts. Location: [#LOC].	$4,047
5300-0246	Whelen Mini-Freedom LED light bars (PR) model FT8RCRCF 28.25" with clear lenses and MKEZ7 mounts. Location: [#LOC].	$4,047
5300-0247	Light bar Federal Signal ADX2201 LED (PR) red with clear lenses. Location: [#LOC].	$2,810
5300-0251	Light bar Whelen Freedom model FN72QLED 72" LED with clear lenses, Opticom and MKEZ7 mounts. Includes (7) red LED, (3) blue LED and (2) white LED. N/A INTL Chassis. Location: Centered on the front cab roof.	$6,183
5300-0252	Light bar Whelen Freedom model FN72QLED 72" LED red/blue with MKEZ7 mounts. N/A INTL Chassis. Location: Centered on the front cab roof	$3,579
5300-0253	Whelen Mini-Freedom LED side facing light bars (PR) model FT8RRBBF driver and FT8BBRRF officer 28.25" with MKEZ7 mounts. Location: [#LOC]. Lense colors: Clear.	$3,877
5300-0254	Light bar Federal Signal ViewPoint. Two (2) 20" light bars LED 3 pod. Lenses shall be all clear. Includes red corner mounted LED modules and amber rear facing LED modules. Location: [#LOC].	$2,398
5300-0255	Light bar Federal Signal JLX2133-CNFPA LED (PR) with clear lenses. Location: [#LOC].	$2,031
5300-0256	Light bar Whelen Freedom model FN72QLED 72" LED with MKEZ7 mounts. Includes (4) red LED, (4) blue LED and (2) white LED. N/A INTL Chassis. Location: Centered on the front cab roof	$3,978

5300-0257	Light bar Whelen Freedom model FN72QLED 72" LED with MKEZ7 mounts. Includes (1) driver forward facing steady burn to meet California law. N/A INTL Chassis. Location: Centered on the front cab roof.	$3,579
5300-0258	Light bar Federal Signal ViewPoint. Two (2) 20" light bars LED 3 pod. Lenses shall be driver Red/blue/Red - officer Blue/Red/Blue. Location: [#LOC].	$2,398
5300-0260	Light bar Whelen Freedom 66" LED with 3M Opticom, red lenses and MKEZ7 mounts. Includes (10) red LED and (2) LR11 dual alley lights. Location: Centered on the front cab roof.	$5,649
5300-0261	Light bar Federal Signal Legend. (2) 24" light bars LED side facing only. Lenses color: clear. Location: [#LOC].	$3,262
5300-0262	Light bars Federal Signal Vector/ViewPoint. One (1) center 21" 3 pod with 3M 792 Opticom and two (2) side 26.5" 4 pod light bars. Lenses to be R/R/W/R-R/Opticom/R-R/W/R/R. Location: "V" centered on the front cab roof.	$6,344
5300-0267	Light bar Whelen Justice model JE2NFPA 56" LED with clear lenses and MKEZ7 mounts. N/A on Vista roofs with front facing windows. Includes (4) red corner facing LIN6 LED lights, (6) forward facing CON3 Linear LED lights; (4) red, (2) white. Location: Centered on the front cab roof.	$2,135
5300-0268	Light bar Federal Signal ViewPoint. Two (2) 20" blue light bars LED 3 pod. Lenses shall be all clear. Location: front cab corners.	$2,398
5300-0269	Light bar Whelen Freedom model FN60VLED 60" LED with clear lenses and MKEZ7 mounts. Includes (6) red, (2) white, (4) blue modules and GTT Opticom. Location: Centered on the front cab roof.	$5,470
5300-0270	Light bar Whelen model 45B38 38" LED with Opticom. Location: Centered front of cab below windshield	$2,614
5300-0271	Light bar Whelen Freedom model FN72QLED 72" LED red/blue with MK8 high mounts. N/A INTL Chassis. Location: Centered on the front cab roof	$3,626
5300-0277	Light bar Whelen Freedom model FN72VLED 72" LED with MK8 mounts. N/A INTL Chassis or Vista roofs with front facing windows. Location: Centered on the front cab roof.	$3,625
5300-0278	Light bar Whelen 4500 LED red/clear (PR) side facing. Includes: (2) 28" side LED bars. Location: [#LOC].	$4,497
5300-0279	Light bar Whelen 4500 LED red/clear (PR). Includes: (2) 24" LED bars. Location: [#LOC].	$4,296
5300-0280	Whelen Mini-Freedom LED side facing light bars (PR) model FT8RCRRF driver and FT8RRCRF officer 24" with clear lenses, no rear facing lights and MKEZ7 mounts. Location: [#LOC]	$4,047
5300-0283	Light bar Whelen Freedom model FN72QLED 72" LED with MKEZ7 mounts. Includes (4) red LED, (4) blue LED and (2) white LED. N/A INTL Chassis. Location: Centered on the front cab roof	$3,978
5300-0284	Light bar Whelen Freedom model FN82VLED 82" LED with MKEZ7 mounts and clear lenses. Includes (12) red, (4) white LEDs. N/A commercial Chassis. Location: Centered on the front cab roof	$5,348
5300-0285	Whelen Mini-Freedom LED side facing light bars (PR) model FT8RRRRF 24" with MK8H high mounts. Location: [#LOC]. Lense colors: Red.	$4,059
5300-0286	Light bar Whelen Freedom model FN72QLED 72" LED with MK8 high mounts. Includes (14) red LED with red lenses. N/A INTL Chassis. Location: Centered on the front cab roof.	$5,030
5300-0287	Light bar Whelen Freedom model FN82VLED 82" LED with MKEZ7 mounts and clear lenses. Includes (14) red, (4) white LEDs. N/A commercial Chassis. Location: Centered on the front cab roof	$5,658
5300-0288	Light bar Federal Signal JetStream 60" LED. Red/Blue Solaris reflectors with clear domes. NFPA Compliant, does not require 2 addl side facing bars. Location: Centered on the front cab roof	$2,581
5300-0289	Light bar Whelen Freedom model FN72QLED 72" LED with MKEZ7 mounts. Includes (5) red LED, (5) blue LED and (4) white LED. N/A INTL Chassis. Location: Centered on the front cab roof	$4,767
5300-0290	Whelen Mini-Freedom LED light bars (PR) model FT8 28.25" with clear lenses and MKEZ7 mounts. Includes: (4) corner mounted red LED, (2) split red/white forward facing LED flashing in X pattern and (1) end mounted red LED Location: [#LOC].	$4,940
5300-0291	Whelen Mini-Freedom LED light bars (PR) model FT8 28.25" with clear lenses and MK8H high mounts. Includes: (4)corner mounted red LED, (2) split red/white forward facing LED flashing in X pattern and (1) end mounted red LED Location: [#LOC].	$4,985
5300-0292	Light bar Whelen Freedom model FN72QLED 72" LED with MK8 high mounts. Includes (8) red LED, (2) split red/white and (4) white LED. N/A INTL Chassis. Location: Centered on the front cab roof.	$5,268
5300-0294	Light bar Whelen Freedom model FN72QLED 72" LED with MK8H mounts. Centered on the front cab roof.	$3,530
5300-0295	Light bar Whelen Freedom model FN72QLED 72" LED with 3M Opticom, clear lenses and MKH8 mounts. N/A INTL Chassis. Location: Centered on the front cab roof.	$5,787
5300-0296	Light bar Whelen Freedom model FN72QLED 72Light bar Whelen Freedom model FN72QLED 72" LED with MKEZ7 mounts. Includes (12) red LED and (2) white LED. N/A INTL Chassis. Location: Centered on the front cab roof	$4,767
5300-0297	Light bar Whelen Freedom model FN66QLED 66" with MKEZ7 mounts. All LED light bar without rear facing LEDs. Driver side red LED, officer blue LED. Location: Centered on the front cab roof.	$3,489

5300-0298	Light bar Whelen Freedom model FN72QLED 72" LED with MKEZ7 mounts. Location: Centered on the front cab roof.	$3,579
5300-0299	Light bar Whelen 4500 Series 20" LED (model 45B20). Location: Centered front of cab below windshield.	$1,592
5300-0300	Light bar Whelen Freedom model FN72QLED 72" LED with 3M Opticom, clear lenses and MKEZ7 mounts. N/A INTL Chassis. Location: Centered on the front cab roof.	$5,787
5300-0301	Light bar Whelen Freedom model FN72QLED 72" LED with Opticom and MK8 high mounts. Includes (8) red LED and (4) white LED with red/clear lenses. N/A INTL Chassis. Location: Centered on the front cab roof.	$5,617
5300-0302	Light bar Federal Signal Split Vision VSLR8-NFPA1. Two (2) 26.5" 4-pod light bars w/ (3) red and (1) multi-color pods on each bar with red/clear lenses. Location: [#LOC].	$3,701
5300-0303	Light bar Whelen Freedom model FN66QLED 66" with MKEZ7 mounts. Includes (10) red LED with red lenses and (2) white LED with clear lenses. Location: Centered on the front cab roof.	$4,165
5300-0304	Light bar Whelen Freedom model FN72QLED 72" LED with MK8 high mounts. Includes (5) red LED, (5) blue and (4) white LED . N/A INTL Chassis. Location: Centered on the front cab roof.	$5,030
5300-0305	Light bar Whelen Freedom model FN55QLED 55" LED with driver red/officer blue LEDS, takedown lights and MKEZ7 mounts. Location: Centered on the front cab roof.	$3,425
5300-0306	Light bar Federal Signal JetSolaris 60" LED. Red and blue Solaris reflectors with center traffic clearing light. NFPA Compliant, does not require 2 addl side facing bars. Location: Centered on the front body, mounted to the roof with no upper body or mounted on a bracket in front of the body with 13" upper body.	$2,511
5300-0307	Light bar Whelen Freedom model FN72QLED 72" LED with clear lenses, Opticom and MKEZ7 mounts. Includes (10) red LED and (2) white LED. N/A INTL Chassis. Location: Centered on the front cab roof.	$6,183
5300-0309	Whelen Mini-Freedom LED side facing light bars (PR) model FNMINI 24" with red/blue LED and MKEZ7 mounts. Location: [#LOC]. Lens colors: Clear.	$3,877
5300-0310	Light bar Whelen Freedom model FN72VLED 72" LED with Opticom and MK8H high mounts. Includes (10) red LED, (2) white LED and (2) blue LED. N/A INTL Chassis. Location: Centered on the front cab roof.	$6,126
5300-0312	Light bar Federal Signal ViewPoint. Two (2) 26.5" 4 pod LED light bars. Lenses to be R/B/B/R C/R/R/R. Location: front cab corners	$3,166
5300-0313	Light bar Federal Signal ADX2205 LED (PR) red/clear. State of Maryland only. Location: [#LOC].	$4,839
5300-0314	Light bar Federal Signal Legend. (2) 24" light bars LED. Lenses color: clear. (1) Model number LGD24Z-00019 and (1) model number LGD24Z-00020. Location: [#LOC].	$1,905
5300-0315	Whelen Mini-Freedom LED side facing light bars (PR) model FT8BRBRF driver and FT8RBRBF officer 28.25" with MKEZ7 mounts. Location: [#LOC]. Lense colors: Clear.	$3,877
5300-0316	(Obsolete from Vendor)Light bar Code 3 LED model 2122NFPA1 (3) 22.5" Long. All red with clear lens. Location: center on forward cab roof and each front corner angled 20 degrees.	$6,044
5300-0317	Light bar Whelen Freedom model FN55QLED 55" with GTT 795H Opticom and MKEZ7 mounts. All LED light bar without rear facing LEDs. Location:[#LOC].	$4,520
5300-0318	Light bar risers (PR) for the light bars installed on the top of the cab to insure 360 degree visibility. The riser shall raise the as mounted light bar(s) approximately 4" to prevent interference with the brow lighting (if so equipped) and ensure 360 degree visibility is maintained.	$176
5300-0319	Light bar Whelen Freedom model FN60VLED 60" LED with MK8H mounts. N/A on Vista roofs with front facing windows. Location: Centered on the front cab roof	$4,550
5300-0320	Light bar Whelen Freedom model FN72QLED 72Light bar Whelen Freedom model FN72QLED 72" LED with MKEZ7 mounts. Includes (10) red LED, (4) blue. Location: Centered on the front cab roof.	$4,034
5300-0322	Light bar made from (2) PowerArc model M90FK-RC light heads. Each light head houses (12) red LEDs (24 total) with clear lenses and a polished stainless steel flange. Includes oscillating technology. Both light heads when mounted together to make light bar are approximately 20" in length. Location: centered front of cab below windshield.	$1,523
5300-0325	Light bar Whelen Freedom model FN72VLED 72" LED with 795H Opticom, (12) red LEDs, (2) clear LEDs and MK8H mounts. N/A INTL Chassis or Vista roofs with front facing windows. Location: Centered on the front cab roof.	$7,368
5300-0326	Light bar Whelen Freedom model FN72QLED 72" LED with GTT Opticom, clear lenses and MK8H mounts. Includes (3) red LED, (3) blue LED and (2) white LED. N/A INTL Chassis. Location: Centered on the front cab roof.	$5,832
5300-0328	Light bar Whelen Freedom model FN72QLED 72" LED with MK8 high mounts. Includes (8) red LED, (2) blue LED and (4) white LED. N/A INTL Chassis. Location: Centered on the front cab roof.	$5,030
5300-0329	Light bar Whelen Freedom model FN55QLED 55" LED with driver red/officer blue LEDS, takedown lights and MKEZ7 mounts. Location: Centered on the front cab roof.	$3,425
5300-0330	Light bar Whelen Freedom model FN72QLED 72" LED with MKE7 mounts. Includes (10) red LED and (4) white LED. N/A INTL Chassis. Location: Centered on the front cab roof.	$5,030

5300-0331	Light bar Federal Signal JetSolaris 60" LED. Clear/white Solaris reflectors with red domes. NFPA compliant. Does not require 2 addl side facing bars. Location: Centered on the front cab roof.	$2,437
5300-0332	Light bar Whelen Freedom model FN72QLED 72" LED with MKEZ7 mounts. Includes (6) red, (4) blue and (4) white Super LED modules. Lens color to be R/R/B/W/B/R/W/W/R/B/W/B/R/R Location: Centered on the front cab roof.	$4,687
5300-0333	Whelen Mini-Freedom LED side facing light bars (PR) model FT8RBRP 24" with MKEZ7 mounts. Location: [#LOC]. Lens color: Red/Blue.	$3,877
5300-0334	Light bar Whelen Freedom model FN72QLED 72" LED GTT Opticom and clear lenses, MKEZ7 mounts. Includes (8) red LED and (2) white LED. N/A INTL Chassis. Location: Centered on the front cab roof	$5,109
5300-0335	Federal ADX7204 LED lightbar 72". Includes (12) Solaris 9-LED red reflectors with clear lenses and Opticom. Location: Centered on the front cab roof.	$5,374
5300-0336	Federal ADX7204 LED lightbar 72". Includes (12) Solaris 9-LED red reflectors with lens arrangement of R/C/R/C/R/C/C/C/C/R/C/R/C/R and Opticom (with switch accessible to driver). Location: Centered on the front cab roof.	$5,374
5300-0337	Light bar Whelen Freedom model FN72QLED 72" LED with MK8H high mounts. Includes (8) red LED and (6) white LED. N/A INTL Chassis. Location: Centered on the front cab roof.	$4,718
5300-0338	Light bar Federal Signal ViewPoint. Two (2) 20" light bars LED 3 pod. All lenses shall be clear. LED modules shall be Red/White/Red - Red/White/Red. Location: [#LOC].	$2,659
5300-0339	Light bar Federal Signal JetSolaris 72" LED. Red and White Solaris reflectors with clear domes. NFPA compliant. Does not require 2 addl side facing bars. Location: Centered on the front cab roof.	$2,318
5300-0340	Light bar Whelen Freedom model FN72QLED 72" LED GTT Opticom with MKEZ7 mounts. Includes (4) red LED, (4) blue LED and (2) white LED. N/A INTL Chassis. Location: Centered on the front cab roof	$5,109
5300-0343	Light bar Whelen Freedom model FN72QLED 72" LED with clear lenses, MKEZ7 mounts and pre-wire for 3M opticom. Includes (3) red LED, (3) blue LED and (2) white LED. N/A INTL Chassis. Location: Centered on the front cab roof	$3,420
5300-0344	Light bar Whelen Justice model JE0NFPA 62" LED with clear lenses and MKEZ7 mounts. N/A on Vista roofs with front facing windows. Includes (4) red corner facing LIN6 LED lights, (6) forward facing CON3 Linear LED lights; (4) red, (2) white. Location: Centered on the front cab roof.	$2,244
5300-0346	Whelen Mini-Freedom LED light bars (PR) model FNMINI 24" with clear lenses and MKEZ7 mounts. Includes red/clear/blue driver and blue/clear/red officer. Location: [#LOC].	$4,047
5300-0347	Light bars Federal Signal One (1) center 3 pod Vision SLR model VSLR3S-NFPA1 LED light bar on 4" tall channel riser. One (1) Vision SLR model VSLR85-NFPA1 side light bars containing two (2) 4 pod LED light bars. Lenses to be R/R/W/R R/W/R R/W/R/R. Location: "V" centered on the front cab roof with the center pod mounted on 4" tall channel risers to accommodate an Opticom below (not included).	$5,494
5310-0000	Light bar Federal Signal, Signal Master SML6. Location: installed at the rear of the apparatus.	$806
5310-0002	Light bar Federal Signal Signal Master SMLED6.	$1,376
5310-0012	Diamond plate shield over rear directional light.	$288
5310-0017	Whelen Traffic Advisor model TAL65 LED - 36" long.	$1,244
5310-0018	Whelen Traffic Advisor Model TAM65 LED - 36" long.	$1,609
5310-0023	Light bar CODE 3 model NASL630 LEDX Narrowstik, 30.5 inches long.	$1,515
5310-0025	Directional light circuit wiring through upper level warning.	$70
5310-0027	Whelen Traffic Advisor Model TAM85 LED - 47" long.	$2,251
5310-0028	Whelen Traffic Advisor Model TAM83 LED - 31" long.	$1,649
5310-0029	Smooth plate shield painted job color over rear directional light.	$498
5310-0031	Whelen Traffic Advisor model TA-4437L LED, split (2) 22.75" long. Locate one each side on rear panel of body.	$1,885
5310-0042	Whelen Traffic Advisor Model TAZ86 LED - 31" long.	$2,070
5310-0043	Whelen Traffic Advisor Model TANF65 LED - 34" long.	$1,584
5310-0045	Light bar Federal Signal Signal Master Viper EXT LED 31" with 6 lights.	$1,454
5350-0000	Camera backup Intec with monochrome monitor.	$4,159
5350-0001	Camera back-up Safety Vision LCD model SV-CLCD70BA-625B with audio. For use with up to 2 cameras.	$1,877
5350-0004	FireCom intercom jack on the turntable. (N/A with three-way aerial intercom).	$1,006
5350-0005	FireCom intercom jacks. (1) turntable jack and (1) tip jack. N/A with two or three-way aerial intercom.	$1,687
5350-0006	FireCom intercom jacks. (1) turntable jack and (2) tip jacks. N/A with two or three-way aerial intercom.	$2,089
5350-0025	Back up camera for Vehicle Information Control Center. Video displays automatically when transmission is in reverse.	$632
5350-0026	Side facing camera mtd up high on officer side of the cab centrally located (above canopy window if applicable) interlocked with right turn signal. Displays video on vehicle information control center.	$632

5350-0027	Side facing camera mtd up high on driver side of the cab centrally located (above canopy window if applicable) interlocked with left turn signal. Displays video on vehicle information control center.	$632
5350-0028	Forward facing camera mounted (approximately) center of cab.	$632
5350-0048	Setcom intercom system with (6) cab jacks and (1) pump panel jack. Custom cabs only. Headsets to be shipped loose.	$8,228
5350-0054	Safety Vision officer's side camera. Requires Safety Vision back-up camera option. SV-620 Kit w/ SV-523. Camera to be located on officer's side mirror.	$820
5350-0060	Diamond plate camera shield.	$192
5350-0061	Safety Vision driver's side camera. Requires Safety Vision back-up camera option. SV-620 Kit w/ SV-523. Camera to be located on driver's side mirror.	$820
5350-0069	FireCom intercom prewire. Includes a PP20 jack at pump operator's panel and aerial turntable. Wiring to be run to officer's side overhead console.	$1,277
5350-0070	Voyager back-up camera. Video displays automatically when transmission is in reverse. Camera only - does not include monitor.	$638
5350-0071	Voyager side mtd rear facing camera positioned up high on officer side of the cab centrally located (above canopy window if applicable) interlocked with right turn signal. Camera only - does not include monitor.	$620
5350-0072	Voyager side mtd rear facing camera positioned up high on driver side of the cab centrally located (above canopy window if applicable) interlocked with left turn signal. Camera only - does not include monitor.	$620
5350-0073	Voyager forward facing camera mounted upper center area of cab.	$583
5350-0074	Sigtronics US-45S intercom system with (4) cab jacks, (1) pump panel jack, four headsets / hooks, PTT switches for driver / ppnl. Does not include radio interface cable. Custom cabs only. Headsets to be shipped loose.	$3,919
5350-0076	David Clark model 3800 intercom system with (5) cab head sets. Headsets to be shipped loose.	$6,434
5350-0078	Smooth plate camera shield painted job color (match the "two tone" sale code color, if two tone applies).	$296
5350-0079	Sigtronics US-45D intercom system with (3) cab jacks, (1) pump panel jack, three headsets / hooks, PTT switches for driver/officer/ppnl. Does not include radio interface cable. Custom cabs only. Headsets to be shipped loose.	$3,700
5350-0080	Camera back-up Safety Vision LCD model SV-CLCD70A-625B with split screen capable monitor and audio. For use with up to 4 cameras.	$2,199
5350-0084	David Clark model 3800 intercom system with (6) cab head sets. Headsets to be shipped loose.	$7,276
5350-0085	Safety Vision officer's side camera SV-622RS w/ SV-512 cable. Requires Safety Vision back-up camera option. Camera to be located up high on officer side of the cab centrally located (above canopy window if applicable) interlocked with right turn signal. Camera only - does not include monitor.	$849
5350-0086	Safety Vision driver's side camera SV-622LS w/ SV-512 cable. Requires Safety Vision back-up camera option. Camera to be located up high on driver side of the cab centrally located (above canopy window if applicable) interlocked with left turn signal. Camera only - does not include monitor.	$849
5350-0110	Camera backup Zone Defense LCD model SYS-323-1-4Q with split screen capable monitor.	$1,812
5350-0111	Camera backup Zone Defense LCD model SYS-323-1-4.	$1,220
5350-0112	Sigtronics US-67S intercom system with (6) cab jacks, six headsets / hooks, PTT switches for driver / officer. Does not include radio interface cable. Custom cabs only. Headsets to be shipped loose.	$5,114
5350-0114	Sigtronics US-67D intercom system with (6) cab jacks, six headsets / hooks, PTT switches for driver / officer. Does not include radio interface cable. Custom cabs only. Headsets to be shipped loose.	$5,214
5350-0116	Federal Signal back-up/DVR camera system. Includes front view, rear view camera, side view cameras, split screen monitor and DVR.	$3,605
5350-0118	Camera backup Federal Signal LCD model CAMSET70-NTSC-4.	$1,097
5350-0123	Sigtronics US-12S intercom system with (7) cab jacks, (1) pump panel jack, seven headsets / hooks, PTT switches for driver / officer / ppnl. Does not include radio interface cable. Custom cabs only. Headsets to be shipped loose.	$5,866
5350-0130	David Clark model 3800 intercom system with (6) cab head sets and (1) pump panel jack. Custom cabs only. Headsets to be shipped loose.	$9,122
5350-0132	David Clark model 3800 intercom system with four (4) cab head sets and one (1) pump panel jack. Radio interfaced to three (3) positions, driver , turret operator and pump panel. Headsets to be shipped loose.	$9,447
5350-0134	Voyager back-up camera wire through multiplex display. Video displays automatically when transmission is in reverse.	$638
5350-0136	Sigtronics US-67D intercom system with (5) cab jacks, (1) pump panel jack, (1) driver rear body jack, five headsets / hooks, PTT switches for driver / officer / ppnl / rear body. Does not include radio interface cable. Custom cabs only. Headsets to be shipped loose.	$4,854

5350-0137	Sigtronics US-45S intercom system with (4) cab jacks, four headsets / hooks, PTT switches for driver / officer. Does not include radio interface cable. Custom cabs only. Headsets to be shipped loose.	$3,814
5350-0140	Safety Vision officer's side camera SV-622RS w/ SV-512 cable. Requires Safety Vision back-up camera option. Camera to be located on officer's side gravel shield offset to the rear.	$820
5350-0141	Safety Vision driver's side camera SV-622LS w/ SV-512 cable. Requires Safety Vision back-up camera option. Camera to be located on driver's side gravel shield offset to the rear.	$820
5350-0142	Safety Vision officer's side camera. Requires Safety Vision back-up camera option. SV-620 Kit w/ SV-523. Camera to be located on officer's side of cab above tank level lights.	$820
5350-0144	Safety Vision officer's side camera. Requires Safety Vision back-up camera option. SV-620 Kit w/ SV-523. Camera to be located on officer's side of cab above scene light.	$820
5350-0156	FRC ACT 2-way aerial intercom.	$1,859
5350-0157	FRC ACT 3-way aerial intercom. Speaker and control module to be located to rear of platform on Bronto units.	$2,834
5350-0158	Camera back-up Safety Vision LCD model SV-CLCD70B-625B with audio. Located in cab dash on bracket (see photos).	$1,877
5350-0169	Camera back-up Safety Vision LCD model SV-CLCD-64-810 with lens shutter that opens when the unit is put in reverse.	$1,941
5350-0173	Safety Vision driver's side camera SV-622LS w/ SV-512 cable. Requires Safety Vision back-up camera option. Camera to be located on driver's side above forward tandem of rear axle.	$820
5350-0174	Safety Vision officer's side camera SV-622RS w/ SV-512 cable. Requires Safety Vision back-up camera option. Camera to be located on officer's side above forward tandem of rear axle.	$820
5350-0175	David Clark model 3800 intercom system with (4) cab head sets. Headsets to be shipped loose.	$5,591
5350-0176	David Clark model 3800 intercom system with (5) cab head sets and (1) pump panel jack. Custom cabs only. Headsets to be shipped loose.	$8,324
5350-0177	FireCom (4) position wireless 5yr extended warranty. Includes 5-day repair time with 2-day shipping.	$1,622
5350-0180	Safety Vision officer's side camera SV-622RS w/ SV-512 cable. Requires Safety Vision back-up camera option. Camera to be located up high on officer side of the cab centrally located (above canopy window if applicable) interlocked with left turn signal. Camera only - does not include monitor.	$849
5350-0181	Camera back-up Safety Vision LCD model SV-CLCD70BA-620A with audio. For use with up to 2 cameras.	$2,014
5350-0182	Safety Vision officer's side camera SV-622RS w/ SV-512 cable. Requires Safety Vision back-up camera option. Camera to be located on front cab corner (approx 31" bottom of camera to bottom of cab) interlocked with right turn signal. Camera only - does not include monitor.	$849
5350-0183	Safety Vision driver's side camera SV-622LS w/ SV-512 cable. Requires Safety Vision back-up camera option. Camera to be located on front cab corner (approx 31" bottom of camera to bottom of cab) interlocked with left turn signal. Camera only - does not include monitor.	$849
5350-0186	Back-up camera speaker. For use with VMUX electrical system. Located in cab accessible to driver.	$193
5350-0188	Federal Signal (Sony) back-up camera wire through multiplex display. Video displays automatically when transmission is in reverse.	$617
5350-0189	Zone Defense PathFindIR FLIR camera. Located centered below windshield. For use with Safety Zone Defense split screen back-up camera system only. Includes guarded switch on driver side lower dash area.	$5,643
5350-0190	Zone Defense side camera. Requires Zone Defense back-up camera option. Camera to be located on driver's and officer's side mirror.	$432
5350-0191	Video Sentinel camera system. Includes FLIR and color zoom camera at platform (with pan and tilt) and 8.4" color weatherproof monitor. The monitor shall be located in/and or on: [#LOC].	$50,640
5350-0192	Safety Vision back-up camera wired through multiplex display. Video displays automatically when transmission is in reverse. Camera only - does not include monitor.	$820
5350-0193	Voyager rear facing camera positioned on officer's side front cab corner (approx 31" bottom of camera to bottom of cab) interlocked with right turn signal. Camera only - does not include monitor.	$620
5350-0194	Voyager rear facing camera positioned on driver's side front cab corner (approx 31" bottom of camera to bottom of cab) interlocked with left turn signal. Camera only - does not include monitor.	$620
5350-0196	Sigtronics US-67D intercom system with (5) cab jacks, (1) pump panel jack, five headsets / hooks, PTT switches for driver / officer / ppnl. Does not include radio interface cable. Custom cabs only. Headsets to be shipped loose.	$4,570
5350-0197	Safety Vision officer's side camera SV-622RS w/ SV-512 cable. Requires Safety Vision back-up camera option. Camera to be located on front fender interlocked with right turn signal. Camera only - does not include monitor.	$849

5350-0198	Voyager rear facing camera positioned on officer's side front fender interlocked with right turn signal. Camera only - does not include monitor.	$620
5350-0199	FireCom intercom kit to include a digital intercom model 5100D, four (4) plug in modules and headset hooks shall be installed within the cab. Headsets are not included and ordered separately (misc loose equip).	$2,405
5350-0200	FireCom intercom kit to include a digital intercom model 5100D, four (4) plug in modules and headset hooks shall be installed within the cab and one (1) exterior pump panel plug in module. Headsets are not included and ordered separately (misc loose equip).	$2,612
5350-0201	FireCom intercom kit to include a digital intercom model 5100D, six (6) plug in modules and headset hooks shall be installed within the cab. Headsets are not included and ordered separately (misc loose equip).	$2,725
5350-0202	FireCom intercom kit to include a digital intercom model 5100D, six (6) plug in modules and headset hooks shall be installed within the cab and one (1) exterior pump panel plug in module. Headsets are not included and ordered separately (misc loose equip).	$2,969
5350-0203	FireCom intercom kit to include a digital intercom model 5100D, five (5) plug in modules and headset hooks shall be installed within the cab. Headsets are not included and ordered separately (misc loose equip).	$2,584
5350-0204	FireCom intercom kit to include a digital intercom model 5100D, five (5) plug in modules and headset hooks shall be installed within the cab and one (1) exterior pump panel plug in module. Headsets are not included and ordered separately (misc loose equip).	$2,790
5350-0205	FireCom wireless intercom kit to include a digital intercom model 5100D, two (2) base transmit units with radio transmission, one (1) base transmit unit for intercom only (no radios) and four (4) headset hooks shall be installed within the cab. Headsets are not included and ordered separately (misc loose equip).	$3,716
5350-0206	FireCom wireless intercom kit to include a digital intercom model 5100D, two (2) base transmit units with radio transmission, one (1) base transmit unit for intercom only (no radios) and five (5) headset hooks shall be installed within the cab. Headsets are not included and ordered separately (misc loose equip).	$3,747
5350-0207	FireCom wireless intercom kit to include a digital intercom model 5100D, two (2) base transmit units with radio transmission, one (1) base transmit unit for intercom only (no radios) and six (6) headset hooks shall be installed within the cab. Headsets are not included and ordered separately (misc loose equip).	$3,777
5350-0208	FireCom intercom kit to include a dual radio digital intercom model 5200D, four (4) plug in modules and headset hooks shall be installed within the cab. Headsets are not included and ordered separately (misc loose equip).	$2,821
5350-0209	FireCom intercom kit to include a dual radio digital intercom model 5200D, four (4) plug in modules and headset hooks shall be installed within the cab and one (1) exterior pump panel plug in module. Headsets are not included and ordered separately (misc loose equip).	$3,028
5350-0210	FireCom intercom kit to include a dual radio digital intercom model 5200D, six (6) plug in modules and headset hooks shall be installed within the cab. Headsets are not included and ordered separately (misc loose equip).	$3,141
5350-0211	FireCom intercom kit to include a dual radio digital intercom model 5200D, six (6) plug in modules and headset hooks shall be installed within the cab and one (1) exterior pump panel plug in module. Headsets are not included and ordered separately (misc loose equip).	$3,384
5350-0212	FireCom intercom kit to include a dual radio digital intercom model 5200D, five (5) plug in modules and headset hooks shall be installed within the cab. Headsets are not included and ordered separately (misc loose equip).	$2,999
5350-0213	FireCom intercom kit to include a dual radio digital intercom model 5200D, five (5) plug in modules and headset hooks shall be installed within the cab and one (1) exterior pump panel plug in module. Headsets are not included and ordered separately (misc loose equip).	$3,207
5350-0214	FireCom wireless intercom kit to include a dual radio digital intercom model 5200D, two (2) base transmit units with radio transmission, one (1) base transmit unit for intercom only (no radios) and four (4) headset hooks shall be installed within the cab. Headsets are not included and ordered separately (misc loose equip).	$4,103
5350-0215	FireCom wireless intercom kit to include a dual radio digital intercom model 5200D, two (2) base transmit units with radio transmission, one (1) base transmit unit for intercom only (no radios) and five (5) headset hooks shall be installed within the cab. Headsets are not included and ordered separately (misc loose equip).	$4,133
5350-0216	FireCom wireless intercom kit to include a dual radio digital intercom model 5200D, two (2) base transmit units with radio transmission, one (1) base transmit unit for intercom only (no radios) and six (6) headset hooks shall be installed within the cab. Headsets are not included and ordered separately (misc loose equip).	$4,163
5350-0219	Safety Vision officer's side camera SV-622RS w/ SV-512 cable. Requires Safety Vision back-up camera option. Camera to be located on the officer side cab, up high behind front door, below the scene light interlocked with right turn signal. Camera only - does not include monitor.	$849

5350-0221	Setcom intercom kit to include a intercom model IM-900 and four (4) plug in modules shall be installed within the cab. Headsets are not included and ordered separately (misc loose equip).	$1,175
5350-0222	Setcom dual radio intercom kit to include a intercom model IM-900 and four (4) plug in modules shall be installed within the cab. Headsets are not included and ordered separately (misc loose equip).	$1,593
5350-0223	Setcom intercom kit to include a intercom model IM-900, four (4) plug in modules shall be installed within the cab and (1) pump panel plug in module. Headsets are not included and ordered separately (misc loose equip).	$1,494
5350-0224	Setcom dual radio intercom kit to include a intercom model IM-900, four (4) plug in modules shall be installed within the cab and (1) pump panel plug in module. Headsets are not included and ordered separately (misc loose equip).	$1,912
5350-0225	Setcom intercom kit to include a intercom model IM-900 and five (5) plug in modules shall be installed within the cab. Headsets are not included and ordered separately (misc loose equip).	$1,454
5350-0226	Setcom dual radio intercom kit to include a intercom model IM-900 and five (5) plug in modules shall be installed within the cab. Headsets are not included and ordered separately (misc loose equip).	$1,872
5350-0227	Setcom intercom kit to include a intercom model IM-900, five (5) plug in modules shall be installed within the cab and (1) pump panel plug in module. Headsets are not included and ordered separately (misc loose equip).	$1,774
5350-0228	Setcom dual radio intercom kit to include a intercom model IM-900, five (5) plug in modules shall be installed within the cab and (1) pump panel plug in module. Headsets are not included and ordered separately (misc loose equip).	$2,190
5350-0229	Setcom intercom kit to include a intercom model IM-900 and six (6) plug in modules shall be installed within the cab. Headsets are not included and ordered separately (misc loose equip).	$1,454
5350-0230	Setcom dual radio intercom kit to include a intercom model IM-900 and six (6) plug in modules shall be installed within the cab. Headsets are not included and ordered separately (misc loose equip).	$1,872
5350-0231	Setcom intercom kit to include a intercom model IM-900, six (6) plug in modules shall be installed within the cab and (1) pump panel plug in module. Headsets are not included and ordered separately (misc loose equip).	$1,774
5350-0232	Setcom dual radio intercom kit to include a intercom model IM-900, six (6) plug in modules shall be installed within the cab and (1) pump panel plug in module. Headsets are not included and ordered separately (misc loose equip).	$2,190
5350-0233	Setcom wireless intercom kit to include a intercom model IM-900 and four (4) wireless adapters shall be installed within the cab. Headsets are not included and ordered separately (misc loose equip).	$1,707
5350-0234	Setcom wireless dual radio intercom kit to include a intercom model IM-900 and four (4) wireless adapters shall be installed within the cab. Headsets are not included and ordered separately (misc loose equip).	$2,124
5350-0235	Setcom wireless intercom kit to include a intercom model IM-900 and five (5) wireless adapters shall be installed within the cab. Headsets are not included and ordered separately (misc loose equip).	$2,097
5350-0236	Setcom wireless dual radio intercom kit to include a intercom model IM-900 and five (5) wireless adapters shall be installed within the cab. Headsets are not included and ordered separately (misc loose equip).	$2,516
5350-0237	Setcom wireless intercom kit to include a intercom model IM-900 and six (6) wireless adapters shall be installed within the cab. Headsets are not included and ordered separately (misc loose equip).	$2,211
5350-0238	Setcom wireless dual radio intercom kit to include a intercom model IM-900 and six (6) wireless adapters shall be installed within the cab. Headsets are not included and ordered separately (misc loose equip).	$2,629
5350-0239	David Clark model 3800 intercom system with (4) cab head sets and (1) pump panel jack. Custom cabs only. Headsets to be shipped loose.	$7,525
5350-0240	Intercom aerial 3-way. Atkinson Dynamics (Federal). The intercom system shall be installed to provide communications between the turntable control station, the driver side front compartment face (pump panel area) and the aerial tip.	$2,837
5350-0241	Zone Defense side camera. Requires Zone Defense back-up camera option. Camera to be located on officer's side mirror.	$232
5350-0242	FireCom (8) position, (1) which is wireless. Intercom kit to include a digital quad radio monitor intercom model 5400D, one (1) base transmit unit with radio transmission (for wireless), seven (7) plug in modules and eight (8) headset hooks shall be installed within the cab. Headsets are not included and ordered separately (misc loose equip).	$5,139
5350-0243	FireCom intercom kit to include a digital intercom model 5100D, eight (8) plug in modules and headset hooks shall be installed within the cab. Headsets are not included and ordered separately (misc loose equip).	$3,116

5350-0244	FRC ACT 3-way aerial intercom to provide communications between the turntable control station, the aerial tip and [#LOC].	$2,834
5350-0245	FireCom (2) wireless (2) plug in intercom kit to include a digital intercom model 5100D, two (2) base transmit units with radio transmission for forward poisitions, (2) plug in modules for rear positions and four (4) headset hooks shall be installed within the cab. Headsets are not included and ordered separately (misc loose equip).	$3,388
5350-0246	Voyager rear facing camera positioned on officer's side front cab mirror (approx 31" bottom of camera to bottom of cab) interlocked with right turn signal. Camera only - does not include monitor.	$620
5350-0247	Remote 5100D head for Firecom intercom. Location: [#LOC].	$533
5350-0248	Remote 5200D head for Firecom intercom. Location: [#LOC].	$605
5380-0004	Compartment light incandescent additional (EA). Locate opposite of standard (if applicable) in compartment [#LOC]	$68
5380-0005	Compartment light Truck-Lite LED additional (EA). Locate opposite of standard in compartment [#LOC].	$177
5380-0006	Compartment light incandescent additional (EA). Door(s) mounted. Compartment [#LOC].	$106
5380-0007	Compartment light Truck-Lite LED additional (EA). Door(s) mounted. Compartment [#LOC].	$242
5380-0009	Compartment light package incandescent for medium bodies.	$682
5380-0010	Compartment light package incandescent for large bodies.	$1,060
5380-0012	Compartment light package Truck-Lite LED for medium bodies.	$2,723
5380-0013	Compartment light package Truck-Lite LED for large bodies.	$4,235
5380-0018	Compartment light package POK LED for medium bodies. Includes one light per compartment (two if transverse).	$3,426
5380-0019	Compartment light package POK LED for large bodies. Includes one light per compartment (two if transverse).	$5,454
5380-0022	Compartment light POK LED additional (EA). Locate [#LOC].	$301
5380-0023	Compartment light POK LED additional (EA). Locate [#LOC].	$518
5380-0027	Ground light package for cab and body - small.	$424
5380-0029	Ground light package for cab and body - large.	$636
5380-0030	Ground light package LED - small.	$1,386
5380-0032	Ground light package LED - large.	$2,075
5380-0033	Step light package body - small.	$396
5380-0035	Step light package body - large.	$592
5380-0036	Step light package body LED - small.	$1,357
5380-0038	Step light package body LED - large.	$2,033
5380-0042	Light recessed step Truck-Lite incandescent (additional). Locate [#LOC].	$109
5380-0045	Light recessed step Truck-Lite LED (additional). Locate [#LOC].	$166
5380-0055	Cab and body ground lights to be wired through chassis reverse.	$70
5380-0056	Compartment lights to be wired to automatically activate when park brake is set (IPO cab mtd compartment light switch).	$70
5380-0060	Additional LED ground light (EA). Location: Below [#LOC].	$186
5380-0062	Compartment light Federal Signal LED additional (EA). Locate opposite of standard in compartment [#LOC].	$124
5380-0063	Compartment light Federal Signal LED additional (EA). Door(s) mounted. Compartment [#LOC].	$186
5380-0065	Compartment light package Federal Signal LED for medium bodies.	$2,213
5380-0066	Compartment light package Federal Signal LED for large bodies.	$3,442
5380-0067	Ground light package Federal Signal LED - small.	$1,386
5380-0068	Ground light package Federal Signal LED - large.	$2,076
5380-0069	Step light package body Federal Signal LED - small.	$1,042
5380-0070	Step light package body Federal Signal LED - large.	$1,564
5380-0071	Light Federal Signal recessed step LED (additional). Locate [#LOC].	$133
5380-0072	Additional Federal Signal LED ground light (EA). Location: Below [#LOC]	$175
5380-0074	Compartment light package Whelen PSC0CDCR LED for large bodies. Light to be stacked vertically on forward side of compartment unless implacable.	$5,222
5380-0075	Compartment light incandescent additional (EA). Locate on ceiling of [#LOC].	$68
5380-0076	Compartment light deluxe package Whelen PSC0CDCR LED for medium bodies. Light to be stacked vertically on both sides of compartment.	$7,119
5380-0077	Compartment light package Amdor Luma-Bar LED for medium bodies. Includes one light per compartment (two if transverse).	$2,234
5380-0078	Compartment light Amdor Luma-Bar LED 26-42" long additional (EA). Locate [#LOC].	$216
5380-0079	Compartment light Amdor Luma-Bar LED 48-74" long additional (EA). Locate [#LOC].	$328
5380-0081	Compartment light package Whelen LED for medium bodies.	$4,240
5380-0082	Ground light package Whelen LED - large.	$2,806
5380-0083	Step light package Whelen LED - large.	$2,806
5380-0084	Ground light package for cab and body - large body. There will be 2 lights under each Compartment opening.	$1,269

5380-0086	Ground light package Amdor Luma Bar / Trucklite LED - large. Lights below cab doors to be Luma Bar, lights below bumper and body to be Trucklite.	$2,133
5380-0087	Compartment light package Weldon LED for medium bodies.	$1,820
5380-0090	Compartment light LED (EA). Location: [#LOC].	$177
5380-0091	Whelen PSC0CDCR LED strip light. Locate opposite standard in [#LOC].	$136
5380-0096	Two (2) Whelen PSC0CDCR LED strip light. Locate two (2) opposite side of standard in [#LOC], one (1) 20" down from top of opening and one (1) 10" up from bottom.	$272
5380-0097	Whelen PSC0CDCR LED strip light. Locate one (1) light 15" down from top of opening on opposite side of standard in [#LOC].	$136
5380-0098	Compartment light package Whelen PSC0CDCR LED for medium bodies. Light to be stacked vertically on one side of compartment.	$3,560
5380-0099	Ladder tunnel light LED (EA).	$166
5380-0111	Compartment light Amdor LED for medical cabinet (EA).	$216
5380-0116	Ground light package Amdor Luma-Bar H2O LED - large.	$1,608
5380-0136	Compartment light package Amdor Luma-Bar LED for large bodies. Includes one light per compartment (two if transverse).	$3,539
5380-0137	Compartment light ROM V3 LED 6-18" long additional (EA). Locate [#LOC].	$159
5380-0138	Compartment light ROM V3 LED 24-36" long additional (EA). Locate [#LOC].	$239
5380-0139	Compartment light ROM V3 LED 42-72" long additional (EA). Locate [#LOC].	$401
5380-0140	Compartment light ROM V3 LED for medical cabinet (EA).	$294
5380-0141	Compartment light package ROM V3 LED for medium bodies. Includes one light per compartment (two if transverse).	$2,668
5380-0142	Compartment light package ROM V3 LED for medium bodies. Includes two lights per compartment (four if transverse).	$5,336
5380-0143	Compartment light ROM V3 LED additional (EA) ceiling mounted as close to door opening as practical. Location: [#LOC].	$294
5380-0144	Compartment light package Amdor Luma-Bar LED for medium bodies. Includes two lights per compartment (four if transverse).	$4,467
5380-0145	Compartment light package Amdor Luma-Bar LED for large bodies. Includes two lights per compartment (four if transverse).	$7,076
5380-0146	Compartment light Amdor LED additional (EA) ceiling mounted as close to door opening as practical. Location: [#LOC].	$216
5380-0147	Compartment light package Weldon LED for large bodies.	$2,832
5380-0148	Compartment light package ROM V3 LED for large bodies. Includes one light per compartment (two if transverse).	$4,244
5380-0149	Compartment light package ROM V3 LED for large bodies. Includes two lights per compartment (four if transverse).	$8,485
5380-0166	Compartment light Trucklite LED additional (EA). Locate in [#LOC].	$177
5380-0202	Step light package body EON LED - large.	$1,088
5380-0203	Step light package body EON LED - small.	$860
5380-0209	Compartment light Amdor LED for medical cabinet (PR).	$432
5380-0210	Compartment light ROM V3 LED for medical cabinet (PR).	$588
5380-0214	Compartment light Truck-Lite LED additional (EA). Locate on ceiling of [#LOC].	$177
5380-0217	Compartment light Whelen Fluorent Plus for medical cabinet (PR).	$610
5380-0218	Step light package Whelen LED - small.	$1,552
5380-0219	Compartment light package, Whelen Fluorent Plus, for large bodies. Includes two lights per compartment (four if transverse).	$9,082
5380-0220	Compartment light package, Whelen Fluorent Plus, for medium bodies. Includes two lights per compartment (four if transverse).	$6,631
5380-0224	Whelen PSC0CDCR LED strip light. Mount light [#LOC].	$136
5380-0226	Compartment light Amdor integral white lumbar. Location: [#LOC].	$191
5390-0000	Deck light - Unity 12 volt (PR). Location: [#LOC].	$335
5390-0001	Hose bed light Unity. Locate at front area of hose bed. Switched with work light switch in cab.	$162
5390-0002	Hose bed light Federal Signal GH Scene. Locate at the front area of hose bed. Switched with work light switch in cab.	$210
5390-0003	Hose bed light Truck-Lite. Locate at the front area of the hose bed. Switched with work light switch in cab.	$97
5390-0004	Crosslay lights Weldon. Locate on each side at rear of crosslay (SM) or forward of crosslay (TM) approx. 16" from side of body.	$298
5390-0005	Crosslay light deck Unity. Locate to rear of crosslay (SM) or forward of crosslay (TM).	$158
5390-0006	Deck lights, Collins FX-12R (PR). Location: [#LOC].	$955
5390-0007	Deck/scene light circuit wiring through chassis reverse. Requires rear deck or scene light.	$70
5390-0008	Federal Signal GH scene lights (PR). Switch in cab (driver and officer side facing lights switched separately). Locate [#LOC].	$394
5390-0018	Whelen 600 series 26 degree scenelights (PR) with weatherproof connectors. Switch in cab (driver and officer side facing lights switched separately). Locate [#LOC].	$312

5390-0019	Whelen 700 series 8-32 degree scenelights (PR) with weatherproof connectors. Switch in cab (driver and officer side facing lights switched separately). Locate [#LOC].	$306
5390-0020	Whelen 900 series Gradient Opti-Scenelight (PR) with weatherproof connectors. Switched in cab (driver and officer side facing lights switched separately). Locate [#LOC].	$312
5390-0022	Crosslay light Truck-Lite. Locate to rear of crosslay (SM) and forward of crosslay (TM as applicable). Switched with work light switch in cab.	$97
5390-0023	Tomar 46H13-C 13 degree scene lights (PR) with weatherproof connectors. Switch in cab (driver and officer side lights switched separately). Locate [#LOC].	$346
5390-0024	Deck Light - Truck-Lite (PR). Location: [#LOC].	$290
5390-0025	Cab scene lights are to be switched with cab doors in addition to standard.	$70
5390-0026	Federal Signal GH Scene cornering lights (PR) wired to turn signals, reverse and work lights. Location: [#LOC]	$755
5390-0030	Deck Lts-Collins FX-6 (PR) Location: [#LOC]	$955
5390-0034	Whelen 600 series 26 degree scene lights (PR) with weatherproof connectors. To be used as cornering lights wired to turn signals and four way flashers. Interlock through park brake. Location: [#LOC].	$312
5390-0036	Hose bed light circuit wiring through chassis reverse. Requires hose bed light.	$70
5390-0038	4" LED light (black groument) with diamond plate box mount (PR). Locate (1) at front of hosebed and (1) at the crosslay area. Switch with work light switch.	$649
5390-0039	Federal Signal GH Scene lights (PR). Switch in cab (driver and officer side facing lights switched together). Locate [#LOC]	$394
5390-0040	Weldon 4 x 6 HID scene lights (PR) with weatherproof connectors. Switch in cab (driver and officer side lights switched separately). Locate [#LOC].	$1,109
5390-0041	Whelen 900 series Gradient Opti-Scene lights (PR) with diamond plate mounting box. Switch in cab (driver and officer side facing lights switched separately). Locate [#LOC].	$470
5390-0043	Crosslay light Trucklite. Locate forward of crosslay. Switched with work light switch in cab.	$97
5390-0047	Federal Signal GH scene Light. Locate rearward facing for hose bed storage lighting. Mounted in (1) formed box mounted off forward area of body. Box may shift side to side for best lighting application. Light switched with worklight switch.	$359
5390-0048	Whelen 600 series gradient Super LED scene lights (PR) with weatherproof connectors. Switch in cab (driver and officer side lights switched separately). Locate [#LOC].	$912
5390-0049	Whelen 600 series 26 degree scene lights (PR) with LH46001 castings. Switch in cab (side facing lights switched separately). Locate [#LOC].	$399
5390-0050	Whelen 500 series LED scene lights (PR) with weatherproof connectors. To be used as cornering lights wired to turn signals and four way flashers. Interlocked with park brake. Location: [#LOC]	$765
5390-0052	Federal Signal GH Scene lights (PR) with diamond plate mounting box. Switch in cab (driver and officer side facing lights switched separately). Locate [#LOC].	$716
5390-0054	Hosebed light Trucklite. Locate (1) each side front of hosebed. Switched with work light switch in cab.	$193
5390-0056	Crosslay light Weldon. Locate to rear of crosslay (SM) or forward of crosslay (TM). Switched with work light switch in cab.	$151
5390-0057	Hosebed light Weldon. Locate at front area of hosebed. Switched with work light switch in cab.	$151
5390-0058	Deck Light - Truck-Lite LED model 81380 (PR). Location: [#LOC].	$365
5390-0059	Whelen 600 series 26 degree scene lights (PR) with diamond plate mounting box. Switch in cab (side facing lights switched separately). Locate [#LOC].	$497
5390-0066	Whelen 600 series gradient Super LED scene lights (PR) with weatherproof connectors and diamond plate mounting boxes. Switch in cab (driver and officer side lights switched separately). Locate [#LOC].	$1,000
5390-0067	Deck light Trucklite. Switched with work light switch in cab. Loc: [#LOC].	$170
5390-0068	Havis Shield 12V HID scene lights model KR-4035X-D (PR). Location(s): [#LOC]. Includes switch in cab for side facing lights.	$1,446
5390-0070	Crosslay light Collins FX-12. Locate to rear of crosslay (SM) and forward of crosslay (TM as applicable).	$479
5390-0071	Hosebed light Collins FX-12. Located center front of hosebed. Switched with work light switch in cab	$479
5390-0073	Deck Light - Whelen LED model PFBP12C (PR). Location: [#LOC].	$967
5390-0075	Speedlay light Trucklite. Locate forward area of pump module. Switched with work light switch in cab.	$97
5390-0076	Hose bed light Truck-Lite LED model 81380. Locate at front of hose bed. Switched with work light switch in cab.	$183
5390-0077	Deck Lt-Collins FX-12R (EA) model KR-SB-312 with lift/push up pole. Due to body mount location a position indicator will not be required. Location(s): [#LOC].	$805
5390-0078	Whelen 600 series 26 degree scene lights (3) with weatherproof connectors. Wire through work light switch in cab. Locate back of cab evenly spaced up high.	$467

5390-0080	Deck Light - Hella Mega Beam LED model 996 136-231 (PR) Location: [#LOC].	$532
5390-0081	Deck Light - Grote LED model 63581 (PR) Location: [#LOC].	$1,521
5390-0082	Whelen 600 series 26 degree scene 24VDC lights (PR) with weatherproof connectors. Switch in cab (driver and officer side facing lights switched separately). Locate [#LOC].	$335
5390-0087	Whelen M6 Linear Super LED scene lights (PR). Switched in cab (lights mtd on the sides of apparatus to be switched separately). Locate [#LOC].	$1,070
5390-0088	Crosslay light Whelen PFBP12C LED. Locate to rear of crosslay (SM) and forward of crosslay (TM as applicable). Switched with work light switch in cab.	$484
5390-0089	Hose bed light Whelen PFBP12C LED. Locate center front of hose bed. Switched with work light switch in cab.	$484
5390-0092	Federal Signal 4" round cornering lights (4) wired to turn signals, reverse and work lights. Location: fixed outrigger covers.	$698
5390-0096	Hosebed light Trucklite LED. Locate (1) in each outer hosebed upper front wall and (2) upper front wall of center hosebed . Switched with work light switch in cab.	$786
5390-0102	Crosslay light Truck-Lite LED model 81380. Locate to rear of crosslay (SM) and forward of crosslay (TM as applicable). Switched with work light switch in cab.	$183
5390-0103	Whelen 700 series gradient Super LED scene lights (PR) with weatherproof connectors. Switch in cab (driver and officer side lights switched separately). Locate [#LOC].	$885
5390-0104	Light Whelen Pioneer Plus model PFP1 with recess mount. Wired through work light switch in cab. Location(s): [#LOC].	$1,227
5390-0110	Hosebed light Grote LED model 63581. Locate center front of hosebed. Switched with work light switch in cab.	$762
5390-0111	Crosslay light Grote LED model 63581. Locate to rear of crosslay (SM) and forward of crosslay (TM as applicable). Switched with work light switch in cab.	$762
5390-0117	Whelen 700 series gradient Super LED scene lights (PR). To be used as cornering lights wired to turn signals reverse and work lights. Location: [#LOC].	$912
5390-0118	Grote 63581 LED scene lights (6). Switch in cab (driver and officer side lights switched separately). Lights located (2) each side of body up high (offset forward and rearward) and (2) at rear of body up high. Wetside only.	$3,657
5390-0119	Light Whelen Pioneer Plus model PFP1 with ROM KR-SB-600-W4 pedestal side mount. Switched with work light switch in cab. Location(s): [#LOC].	$2,453
5390-0124	Whelen 600 series gradient Super LED scene lights (3) with weatherproof connectors. Wire through work light switch in cab. Locate back of cab evenly spaced up high.	$1,368
5390-0129	Hose bed light FRC LED900 with diamond plate mounting box. Locate [#LOC]. Switched with worklight switch in cab.	$830
5390-0130	Deck light Whelen PAR-36, model PFBP12C LED (PR). Switched with work light switch in cab. Location: [#LOC].	$967
5390-0131	Crosslay light deck Unity. Locate light on the drivers side rearward of the crosslay door mounted on the Hot Shot II pan cover lid.	$158
5390-0132	Warning light Federal Signal QL64-BACKUP (PR) white with clear lens. Surface mounted with bezel. Location: [#LOC]	$555
5390-0133	Deck light - Unity 12 volt LED (PR). Location: [#LOC].	$915
5390-0139	Crosslay light Whelen PFBP12C LED (PR). Locate on each side at rear of crosslay (SM) or forward of crosslay (TM). Location: [#LOC]. Switched with work light switch in cab.	$967
5390-0140	Whelen 700 series gradient Super LED scene light (EA) with weatherproof connector(s). Switch in cab (driver and officer side lights if applicable switched separately). Locate [#LOC].	$434
5390-0141	Hosebed light Trucklite LED. Locate (1) in driver outer hosebed upper front wall and (2) upper front wall of center hosebed . Switched with work light switch in cab.	$589
5390-0143	Crosslay light deck Unity. Locate to driver side rear of crosslay.	$158
5390-0144	Unity deck light with model TP-1-I internal pull-up pole. Includes switch on lighthead and driver side overhead console. Location: [#LOC].	$538
5390-0151	Whelen M6 Linear Super LED scene lights (PR) with weatherproof connectors and diamond plate mounting boxes. Location: [#LOC]. Switched with worklight switch in cab.	$1,230
5400-0003	Engine compartment light (EA).	$113
5400-0004	Incandescent pump panel light - additional (EA). Location: [#LOC].	$86
5400-0006	Pump panel LED light package with (3) lights per side pump panel. Pump panels over 45" may require additional lights. Side mount only.	$1,036
5400-0007	LED pump panel light - additional (EA). Location: [#LOC].	$177
5400-0008	(1) pump panel light over the pump control area to be wired to come on when pump shift is placed in pump. (Side mount forward light noted, Top Mount is center light.)	$36
5400-0010	Incandescent pump compartment light (EA).	$123
5400-0011	LED pump compartment light (EA).	$332
5400-0020	Federal NightFighter light with internal pole. Locate [#LOC]. Switched on light head.	$1,155
5400-0021	Federal NightFighter Light with External Pole. Locate [#LOC]. Switched on light head.	$1,998
5400-0030	Fog Lights, Quartz Halogen (PR) [#COL] and located [#LOC].	$251

5400-0033	Cab Dome Lts Red/White 4" incandescent. White light wired through door and light assembly mounted rocker switch. Red light through light assembly mounted rocker switch.	$517
5400-0034	Dome Lts Red 4" (Ea) [#LOC]. Includes assembly mounted rocker switch.	$123
5400-0035	Dome Lts White 4" incandescent. Includes assembly mounted rocker switch. Requires one for each cab door.	$140
5400-0037	Dome Lts Red/White Incandescent. Package includes two lights mounted in the front and two mounted in the rear of the cab. White light wire through door and light assembly mounted switch. Red light through light assembly mounted switch.	$497
5400-0038	Spotlights, 6" Unity (PR) cab post mount.	$406
5400-0039	Spotlight Specialty 2150 hand held located on officer's side of cab dash - hardwired.	$348
5400-0041	Spotlight, Federal Visibeam II Remote. If one is selected it will be located centered on cab roof mounted on a bracket. If two are selected, they will be located one each side of cab roof to rear of light bar.	$614
5400-0042	Map light, Sunnex [#LOC].	$297
5400-0043	Maplight-Little Lt 18" Flex [#LOC]. Includes on/off switch.	$201
5400-0047	Pump panel light package with (3) lights per side pump panel. Pump panels over 45" may require additional lights. Side mount only.	$581
5400-0049	Pump panel light package - RLP/MM. Includes (2) lights per side pump panel and (2) lights for angled upper control panel.	$428
5400-0050	Pump panel light LED package - RLP/MM. Includes (2) lights per side pump panel and (2) lights for angled upper control panel.	$714
5400-0054	Spotlight Specialty 2150 hand held located on officer's side of cab dash w/12V receptacle.	$348
5400-0057	Dome lts red/white 4" LED (4). Lights to be located two front and two rear. White light wired through door and light assembly mounted rocker switch. Red light through light assembly mounted rocker switch.	$1,341
5400-0059	Optronics model QH-3000 handheld 12v spotlight. To be hardwired on officer's side of cab dash.	$135
5400-0060	Spotlight Specialty 2150 hand held located on driver's side 3 x 3 post - hardwired.	$348
5400-0061	Golight model 2049 remote control spotlight with black housing. If one is selected it will be located centered on cab roof on a pedestal to rear of light bar. If two are selected, they will be located one each side of cab roof to rear of light bar.	$767
5400-0062	Code 3 model GLB3200 remote control spotlight with black housing. If one is selected it will be located centered on cab roof on a pedistal to rear of lightbar. If two are selected, they will be located one each side of cab roof to rear of lightbar.	$1,096
5400-0064	Dome Lts Red/White 4" LED (5). Lights to be located two front and three rear. White light wired through door and light assembly mounted rocker switch. Red light through light assembly mounted rocker switch.	$1,674
5400-0065	Map light, Littlite 18" flexible LED. Location: [#LOC].	$230
5400-0069	Map light Sunnex HS 761-20 with frosted lens. Location: Officer overhead console inboard of AC vent.	$259
5400-0071	Spotlight, Collins CL-12-M hand held located on officer's side of cab dash, hardwired. Includes Handlelok 1004 bracket.	$419
5400-0076	Golight model 2020 permanent spotlight. Location: Centered top of lightbar.	$608
5400-0080	FRC Night Master light with external push-up pole. Locate [#LOC]. Switched on light head.	$1,105
5400-0081	Golight model 2067 remote control spot light with white housing. If one is selected it will be located centered on cab roof on a pedestal to rear of light bar. If two are selected, they will be located one each side of cab roof to rear of light bar.	$767
5400-0082	Maplight-Little Lt 18" Flex [#LOC]. Includes dimmer switch.	$201
5400-0083	Map light Sunnex HS 761-20 with red lens and dimmer switch. Location: Officer overhead console inboard of AC vent.	$259
5400-0084	SpotLt-Fed VisibeamII Remote. If one is select it will be located center on forward vista roof. If two are selected, they will be located one each side front corners of vista cab roof.	$614
5400-0085	Enclose pump panel LED light package with (3) lights per side pump panel. Side mount only.	$1,381
5400-0086	Spotlight Specialty 2150 hand held located on font of map box - hardwired.	$348
5400-0087	Map light Sunnex model HS741-27 with red lens. Location: [#LOC].	$277
5400-0090	Spotlight Specialty 2150 hand held located on officer's side 3 x 3 post - hardwired.	$348
5400-0091	Zico cornering light (PR) with polished stainless steel housing model #ZQL-SS-H7614 wired through turn signals. Includes cornering light relay. Lights to be directed downward. Location: (1) each side of gravel shield (forward).	$912
5400-0092	Weldon pump panel LED light package with (3) lights per side pump panel. Pump panels over 45" may require additional lights. Side mount only.	$844
5400-0093	Golight model 2049 remote control spotlight with black housing (PR) located one each side of cab roof to rear of lightbar. Driver light control located on driver dash switch panel. Officer light control located on officer dash switch panel. (Quest cab only)	$1,535
5400-0097	Maplight-Havis Shield 12" Flex LED. Location: [#LOC].	$223

5400-0098	Pump panel LED light package with (3) Whelen 4"round lights per side pump panel. Pump panels over 45" may require additional lights. Side mount only.	$1,036
5400-0104	Spotlight Specialty 2150 hand held located on officer's side, side facing engine cover offset forward below cab dash - hardwired.	$348
5400-0109	Weldon LED pump panel light - additional (EA). Location: [#LOC].	$131
5400-0110	Weldon pump panel light LED package - RLP/MM. Includes (2) lights per side pump panel and (2) lights for angled upper control panel.	$624
5400-0112	Innovative Lighting backing light (PR) with polished housing model #580-0200-1. Location: [#LOC].	$326
5400-0125	SpotLt-Fed VisibeamII Remote. Officer side of cab roof to rear of lightbar mounted on a bracket.	$614
5400-0129	Spotlight Collins CL-12-M hand held located on officer's side of cab dash - hardwired. Includes Handlelok 1004 bracket, shipped loose.	$419
5400-0130	Spotlight Optronics Blue Eye model KB4000 hand held located on officer's side of cab dash - hardwired.	$207
5400-0131	Pump panel LED light package Amdor Luma Bar H2O. Includes (1) light per side pump panel (2 driver if split panel). Side mount only.	$844
5400-0132	Incandescent pump panel and runningboard lighting package. Includes (3) lights shield mounted on the driver side and (1) 4" recessed light mounted on the officer side compartment face.	$581
5400-0133	Golight model 2067 remote control spotlight with white housing. Locate (1) each side cab corner outboard of forward facing lightbar without pedestal. Requires additional side facing warning lights to meet NFPA.	$767
5400-0137	Pump panel LED light package for side mount eMAX. Includes (6) Tecniq EON lights with S/S housings, located (3) each side above lower side intake / discharge panels. Includes S/S light shields. SM eMAX only.	$344
5400-0144	ROM V3 pump panel light LED package - RLP/MM. Includes (1) light per side pump panel and (1) light for angled upper control panel.	$791
5400-0148	Maplight-Little Lt 12" Flex LED. Location: [#LOC].	$230
5400-0149	Pump panel Amdor H2O LED light package with (3) lights per side pump panel. Pump panels over 45" may require additional lights. Side mount only.	$852
5400-0151	Pump compartment light EON LED. Wired to work light.	$198
5400-0154	Spotlight Specialty 2150 hand held located on center of cab dash with plug-in connector.	$348
5400-0156	Spotlight Collins CL-12-M handheld. Light to be hardwired and bracket (Handlelok 1004) to be mounted to the rear of the center console.	$419
5400-0157	Spotlight Whelen PAR46 Super LED hand held located on officer's side of cab dash - hardwired.	$571
5400-0158	Spotlights, 6" Unity LED (EA) cab post mount. Location: Officer side cab A post.	$474
5400-0159	Optronics model QH-100 handheld 12v spotlight. To be hardwired on officer's side of cab dash.	$135
5400-0164	Spotlights, 6" Unity LED (PR) cab post mount.	$949
5400-0165	Pump compartment light EON LED. Light shall be switched from the cab dash with the work light switch.	$198
5400-0166	Fog lights (PR) Perlux 500 series model 05001-5 clear fog Light located [#LOC].	$545
5400-0167	(1) pump panel light over the pump control area to be wired to come on when pump shift is placed in pump. (Rearward light.)	$36
5400-0168	Whelen LED pump compartment light (EA).	$252
5400-0171	Compartment light EON LED IPOS. Location of light(s): [#LOC].	$129
5400-0173	Spotlight Whelen PAR46 Super LED hand held located on officer's side of cab dash with plug-in connector.	$571
5450-0002	Quartz light Kwik Raze 500W/110V without pole. Location(s): [#LOC]	$563
5450-0003	Quartz light KwikRaze 500W/110V model KR-905-I with internal telepole. Location(s): [#LOC]	$620
5450-0004	Quartz light KwikRaze 500W/110V model KR-SB-505-W/2-I with external telepole. Location(s): [#LOC]	$976
5450-0005	Quartz light Kwik Raze 500W/110V portable. Location(s): [#LOC].	$395
5450-0006	Quartz light KwikRaze 500W/110V model KR-SB-805-TM-I with external mount tripod telepole. Requires 110V receptacle. Location(s): [#LOC]	$1,449
5450-0007	Quartz light Kwik Raze 500W/110V with recess mount. Location(s): [#LOC].	$901
5450-0008	Quartz light Fire Research Focus 750W/110V model FCA510E-S75-SW with internal pull-up pole. Location(s): [#LOC].	$1,376
5450-0009	Quartz light Fire Research Focus 750W/110V model FCA530-S75-SR-SW with side mount push-up pole. Location(s): [#LOC].	$1,454
5450-0010	Quartz light Fire Research Focus 1000W/240V model FCA200-M12 with recess mount. Location(s): [#LOC].	$772
5450-0011	Quartz light Fire Research Optimum 900W/240V model OPA200-R90 with recess mount. Location(s): [#LOC].	$1,011
5450-0012	Quartz light Fire Research Focus 750W/110V model FCA570-S75 without pole. Location(s): [#LOC].	$1,073

5450-0015	Quartz light Fire Research Focus 750W/110V model FCA600-S75-ON-FC603 with 40" telescopic tripod pole. Location(s): [#LOC].	$1,472
5450-0016	Quartz light Fire Research Focus 750W/110V model FCA540-S75-SW with side mount pull up pole. Location(s): [#LOC].	$1,428
5450-0017	Quartz light Fire Research Focus 750W/110V model FCA512-S75-CLP64.5-SW with 64.5" inner pole and 31.5" outer pole. Location(s): [#LOC]	$1,536
5450-0019	Quartz light Fire Research Focus 750W/110V model FCA802-S75-01 with brow mount. Location(s): [#LOC].	$832
5450-0020	Quartz light Fire Research Focus 1500W/240V model FCA600-M15-ON-FC603 with telescopic tripod pole. Location(s): [#LOC].	$1,551
5450-0021	Quartz light Fire Research Optimum 750W/110V model OPA570-S75 without pole. Location(s): [#LOC].	$1,136
5450-0022	Quartz light Fire Research Optimum 150W/12V model OPA802-HD15-01 with brow mount. Includes switch accessible to driver. Location(s): [#LOC].	$1,403
5450-0023	Quartz light Fire Research Optimum 150W/12V model OPA510E-HD15-SW with internal pole. Includes switch accessible to driver. Location(s): [#LOC].	$1,680
5450-0024	Quartz light Fire Research Optimum 750W/110V model OPA510E-S75-SW with internal pull up pole. Location(s): [#LOC].	$1,418
5450-0028	Quartz light Fire Research Optimum 750W/110V model OPA530-S75-SR-SW with side mount external pole. Location(s): [#LOC].	$1,495
5450-0029	Quartz light Fire Research Optimum 750W/110V model OPA540-S75-SW with side mount pull up pole. Location(s): [#LOC]	$1,371
5450-0030	Quartz light Fire Research Optimum 750W/110V model OPA600-S75-ON-OP603 with 40" telescopic tripod pole. Location(s): [#LOC].	$1,487
5450-0031	Quartz light Fire Research Optimum 750W/110V model OPA802-S75-01 with brow mount. Location(s): [#LOC].	$889
5450-0032	Quartz light Fire Research Optimum 900W/240V model OPA600-R90-ON-OP603 with telescopic tripod pole. Location(s): [#LOC]	$1,581
5450-0033	Quartz light Fire Research Optimum 150W/12V model OPA530-HD15-SR-SW with side mount external pole. Includes switch accessible to driver. Location(s): [#LOC].	$1,876
5450-0034	Quartz light MagnaFire 900W/240V model KR-739-HD with portable base. Requires 220V receptacle. Location(s): [#LOC]	$580
5450-0035	Quartz light MagnaFire 900W/240V model KR-1939 with recess mount. Location(s): [#LOC].	$800
5450-0036	Quartz light MagnaFire 900W/240V model KR-SB-639 without pole. Location(s): [#LOC].	$929
5450-0037	Quartz light MagnaFire 900W/240V model KR-939-I with internal pole. Location(s): [#LOC].	$883
5450-0038	Quartz light MagnaFire 900W/240V model KR-SB-539-W/2-I with external pole. Location(s): [#LOC].	$1,156
5450-0039	Quartz light MagnaFire 900W/240V model KR-SB-839-TM-I with external mount tripod telepole. Requires 220 volt receptacle. Location(s): [#LOC].	$1,256
5450-0040	Quartz light MagnaFire 900W/240V model KR-1339 with low profile mount. Location(s): [#LOC]	$917
5450-0041	Quartz light MagnaFire 900W/240V model KR-1539 with cab brow mount. Not available in front center due to DOT lights. Location(s): [#LOC].	$814
5450-0045	Quartz light MagnaFire 750W/120V model KR-736-HD with portable base. Requires 110V receptacle. Location(s): [#LOC]	$535
5450-0046	Quartz light MagnaFire 750W/120V model KR-1936 with recess mount. Location(s): [#LOC].	$831
5450-0047	Quartz light MagnaFire 750W/120V model KR-SB-636 without pole. Location(s): [#LOC].	$961
5450-0048	Quartz light MagnaFire 750W/120V model KR-936-I with internal pole. Location(s): [#LOC].	$952
5450-0049	Quartz light MagnaFire 750W/120V model KR-SB-536-W/2-I with external pole. Location(s): [#LOC].	$1,211
5450-0050	Quartz light MagnaFire 750W/120V model KR-SB-836-TM-I with external mount tripod telepole. Requires 110V receptacle. Location(s): [#LOC].	$1,395
5450-0051	Quartz light MagnaFire 750W/120V model KR-1336 with low profile mount. Location(s): [#LOC]	$856
5450-0052	Quartz light MagnaFire 750W/120V model KR-1536 with cab brow mount. Location(s): [#LOC].	$755
5450-0053	Quartz light MagnaFire 750W/120V model KR-SB-436-I-XL with through body push up pole. Location(s): [#LOC]	$1,162
5450-0054	Quartz light KwikRaze 1500W/220V model KR-SB-9S15-NCW-I with internal telepole. Location(s): [#LOC].	$705
5450-0055	Quartz light KwikRaze 1500W/220V model KR-SB-515-W/2-I with external telepole. Location(s): [#LOC]	$1,057
5450-0056	Quartz light KwikRaze 1500W/220V model KR-SB-815-TM-I with external mount tripod telepole. Requires 220V receptacle. Location(s): [#LOC]	$1,500
5450-0058	Quartz light Fire Research Optimum 1500W/240V model OPA510E-M15-SW with internal pull-up pole. Location(s): [#LOC].	$1,515
5450-0059	Quartz light Fire Research Optimum 750W/110V portable model OPA700-S75-OP703. Location(s): [#LOC].	$757

5450-0060	Quartz light Fire Research Focus 750W/120V model FCA300U-S75 with brow mount. Location: Center of cab brow.	$832
5450-0062	Quartz light MagnaFire 750W/120V model KR-SB-236-I-SW2 SPCL with top raise external pole. Location(s): [#LOC]	$1,175
5450-0065	Quartz light Fire Research Optimum 1000W/240V model OPA656-M12-ON-OP603 with telescopic tripod pole. Location(s): [#LOC]	$1,581
5450-0067	Quartz light Fire Research Focus 500W/110V model FCA802-S50-01 with brow mount. Light head and mount to be powder coated black. Location(s): [#LOC]	$810
5450-0068	Quartz light MagnaFire 750W/120V model KR-SB-436-I-XL with through ceiling push up pole (PR). Outer pole to be 12", inner pole to be 48". Both lights to be on one breaker. Includes support tubes on interior of cab and switch each side on rear cab wall to control lights. Location: One each side rear corner of cab roof.	$2,859
5450-0069	Quartz light MagnaFire 5000 500W/120V model KR-2555 with cab brow mount. Location(s): [#LOC]. Not available in front center due to DOT lights.	$668
5450-0070	Quartz light MagnaFire 5000 500W/120V model KR-SB-555-W/2-I with external pole. Location(s): [#LOC].	$1,049
5450-0072	Quartz light Fire Research Optimum 1500W/240V model OPA100 with internal pole. Location(s): [#LOC].	$1,392
5450-0073	Quartz light Fire Research Focus 750W/120V model FCA300U-S75 with brow mount. Light head and mount to be powder coated black. Location: Center of cab brow.	$874
5450-0074	Quartz light timer (ea).	$126
5450-0075	Quartz light Fire Research Optimum 900W/240V model OPA510E-R90-SW with top raise pole. Location(s): [#LOC].	$1,495
5450-0076	Quartz light MagnaFire 5000 750W/120V model KR-3556 with front cab brow mount. Quest cabs only. Location(s): [#LOC].	$755
5450-0077	Quartz light MagnaFire 5000 750W/120V model KR-3656 with side cab brow mount. Quest cabs only. Location(s): [#LOC]	$755
5450-0078	Quartz light Fire Research Focus 750W/110V model FCA802-S75-01 with brow mount. Light head and mount to be powder coated black. Location(s): [#LOC]	$874
5450-0079	Quartz light MagnaFire 750W/120V model KR-1536 with cab brow mount. Light head and mount to be powder coated black. Location(s): [#LOC].	$799
5450-0080	Quartz light Fire Research Focus 750W/110V model FCA830-S75 with brow mount. Quest and CII LTH aerial cabs only. Location(s): [#LOC].	$832
5450-0081	Quartz light Fire Research Optimum 750W/110V model OPA656-S75-ON-OP603 with 28" telescopic tripod pole. Location(s): [#LOC]	$1,487
5450-0082	Quartz light Fire Research Focus 750W/110V model FCA656-S75-ON-FC603 with 28" telescopic tripod pole. Location(s): [#LOC].	$1,472
5450-0083	Quartz light Fire Research Focus 1500W/240V model FCA530-M15-SR-SW with side mount push up pole. Location(s): [#LOC].	$1,459
5450-0084	Quartz light Fire Research Focus 150W/12V model FCA510E-D15-SW with internal pole. Includes switch accessible to driver. Location(s): [#LOC].	$1,045
5450-0089	Quartz light MagnaFire 900W/240V model KR-SB-539-W/2-I with external pole. Light head to be powder coated black. Location(s): [#LOC].	$1,198
5450-0090	Aerial circuit timer.	$234
5450-0092	Quartz light Fire Research Focus 750W/110V model FCA530-S75-SR-SW with side mount push-up pole. Light head and mounts to be powder coated black. Location(s): [#LOC].	$1,497
5450-0094	Quartz light Extenda-Lite 750W/110V model E-4750-EX-TL-UI-EX. Location(s): [#LOC].	$791
5450-0095	Quartz light Fire Research Focus 150W/12V model FCA300U-D15 with brow mount. Includes switch accessible to driver. Location: center of cab brow.	$959
5450-0096	Quartz light Fire Research Optimum 1000W/110V portable model OPA700-M10-OP703. Location(s): [#LOC].	$864
5450-0098	Quartz light Fire Research Optimum 1500W/240V model OPA600-M15-ON-OP603 with telescopic tripod pole. Location(s): [#LOC]	$1,643
5450-0099	Quartz light Fire Research Optimum 1500W/240V model OPA200-M15 with recess mount. Location(s):[#LOC].	$923
5450-0102	Quartz light Fire Research Focus 1000W/120V model FCA530-M10-SR-SW-ON with external push up pole. Location(s): [#LOC].	$1,551
5450-0114	Quartz light Fire Research Focus 1000W/120V model FCA200-M10 with recess mount. Location(s): [#LOC].	$772
5450-0115	Light Whelen 12 volt Pioneer Plus model PFP1 with brow mount. Includes switch in cab (driver and officer side facing lights switched separately). Location(s): [#LOC].	$1,430
5450-0116	Quartz light Fire Research Focus 500W/110V model FCA600-S50-ON-FC603 with 40" telescopic tripod pole. Location(s): [#LOC].	$1,472
5450-0117	Light Whelen Pioneer Plus model PFP2 12V with brow mount and PFLASH. Includes switch in cab (driver and officer side facing lights switched separately). Location(s): [#LOC].	$2,186

5450-0118	Quartz light Fire Research Focus 1000W/240V model FCA802-M12-01 with brow mount. Location(s): [#LOC].	$883
5450-0121	Quartz light Fire Research Focus 1500W/240V model FCA530-M15-SR-SW-ON with external push up pole. Location(s): [#LOC].	$1,474
5450-0122	Light Whelen Pioneer Plus model PFP2 12V with brow mount. Includes switch in cab accessible to driver (driver and officer side facing lights switched separately). Location(s): [#LOC].	$2,079
5450-0123	Light Whelen Pioneer Plus LED model PFP2 12V with PBAPEDD pedestal mount. Includes switch in cab (side facing lights switched separately). Location(s): [#LOC].	$2,057
5450-0124	Light Whelen Pioneer model PFA2 with brow mount. Includes switch in cab (driver and officer side facing lights switched separately). Location(s): [#LOC].	$1,670
5450-0125	Quartz light MagnaFire 5000 750W/120V model KR-2556 with cab brow mount. Location(s): [#LOC].	$755
5450-0126	Quartz light Fire Research Focus 750W/110V model FCA642-S75-ON-FC6F3 with 16.625" telescopic tripod pole. Location(s): [#LOC].	$1,472
5450-0127	Quartz light Fire Research Focus 150W/12V model FCA802-H15-01 with brow mount. Includes switch accessible to driver. Location(s): [#LOC]	$1,358
5450-0128	FRC quartz light head and bracket (brow mount only) to be powdered coated job color (EA). Requires paint spray out sent to FRC for color matching.	$168
5450-0130	Quartz light MagnaFire 750W/120V model KR-2556 with cab brow mount. Location(s): [#LOC]. Not available in front center due to DOT lights.	$755
5450-0131	Light Whelen Pioneer Plus model PFP2 12V with internal top raise pole mount (ROM model KR-9PFP2-S). Includes switch on light head. Location: [#LOC].	$1,853
5450-0134	Light Whelen Pioneer Plus model PFP2 12V with brow mount powder coated black. Includes switch in cab (driver and officer side facing lights switched separately). Location(s): [#LOC].	$2,079
5450-0135	Quartz light Fire Research Focus 150W/12V model FCA802-H15-01 with brow mount. Light head and mount to be powder coated black. Includes switch accessible to driver. Location(s): [#LOC].	$1,397
5450-0136	Light Whelen Pioneer Plus model PCP2 flood/spot with brow mount. Includes switch in cab (driver and officer side facing lights switched separately). Location(s): [#LOC].	$2,096
5450-0137	Floodlight Whelen/ROM model KR-SB-8PFP2AC-SL-I-TM with external mount tripod telepole. Requires 110V receptacle. Location(s): [#LOC].	$2,559
5450-0138	Light Whelen Pioneer Plus model PFP2AC with Quest brow mount. Location(s): [#LOC].	$2,035
5450-0139	Light Whelen Pioneer Plus model PFP1AC 120V with recess mount. Location(s): [#LOC].	$1,270
5450-0140	Light Whelen Pioneer model PFA1 with pedistal mount. Includes switch in cab (driver and officer side facing lights switched separately). Location(s): [#LOC].	$1,371
5450-0141	Quartz light Fire Research Optimum 150W/12V model OPA230-H15 with recess mount. Includes switch in cab console. Location(s): [#LOC].	$1,430
5450-0142	Light Whelen Pioneer model PCP2 with external bottom raise pole mount (Havis KR-SB-5PCP2-W/2-S-I). Includes switch on light head. Location(s): [#LOC].	$2,157
5450-0143	Light Whelen 12V Pioneer model PFP2 with PBA203 recess mount. Includes switch accessible to driver (side facing lights switched separately). Location: [#LOC].	$1,976
5450-0144	Fire Research Evolution 12V LED scene light model FCA530-V15-SW-H with external push-up pole. Includes switch in cab accessible to driver. Location: [#LOC].	$2,107
5450-0145	Light Whelen Pioneer Plus model PFP1 with recess mount. Includes switch accessible to driver (side facing lights switched separately). Location(s): [#LOC].	$1,227
5450-0151	Light Whelen Pioneer model PFP2 12V with external bottom raise pole mount (ROM model KR-SB-5PFP2-W/2-S-I). Includes switch on light head. Location(s): [#LOC].	$2,157
5450-0153	Light Whelen Pioneer Plus model PFP1 with bail mount. Includes switch in cab accessible to driver (side facing lights switched seperately). Location(s): [#LOC].	$1,227
5450-0154	Fire Research Evolution 12V LED scene light model FCA510E-V15-SW with internal pull-up pole. Includes switch accessible to driver. Location: [#LOC].	$2,107
5450-0155	Fire Research Evolution 12V LED scene light model FCA802-V15 with brow mount. Includes switch accessible to driver (driver and officer side facing lights switched separately). Location: [#LOC].	$1,814
5450-0156	Quartz light Fire Research Evolution 12V LED model FCA300U-V15 with brow mount. Includes switch accessible to driver. Location: center of cab brow.	$1,748
5450-0161	Light Whelen 12V Pioneer model PCP2 with internal push-up pole mount (Havis KR-SB-4PCP2-S-I). Includes switch on light head. Location(s): [#LOC].	$2,129
5450-0162	Light Whelen Pioneer Plus model PFP2AC 120V with brow mount. Location(s): [#LOC].	$2,035
5450-0163	Light Whelen Pioneer model PFP2AC 120V with internal top raise pole mount (ROM model KR-9PFP2AC-I). Location: [#LOC].	$1,853
5450-0164	Light Whelen Pioneer Plus model PFP2AC 120 volts with permanent mount (ROM model KR-SB-6PFP2AC). Location(s): [#LOC].	$1,903
5450-0165	Light Whelen Pioneer model PFP2AC 120V with external bottom raise pole mount (ROM model KR-SB-5PFP2AC-W/2-I). Location(s): [#LOC].	$2,134
5450-0166	Light Whelen Pioneer Plus model PFP2AC 120V with recess mount. Location(s): [#LOC].	$2,359

5450-0167	Light Whelen Pioneer Plus model PFP2 with Quest brow mount. Includes switch in cab accessible to driver (driver and officer side facing lights switched separately). Location(s): [#LOC].	$2,079
5450-0168	Floodlight Whelen/ROM model KR-SB-8PFP2-SL-I-TM with external mount tripod telepole. Location(s): [#LOC].	$2,559
5450-0169	Quartz light MagnaFire 750W/120V model KR-SB-836-TM-SL-I with external mount tripod telepole. Requires 110V receptacle. Location(s): [#LOC].	$1,395
5450-0170	Fire Research Evolution 12V LED model FCA210-V12 with recess mount. Includes switch in cab accessible to driver. Location(s): [#LOC].	$1,671
5450-0171	Light Whelen Pioneer model PFA1 with PBA103 recess mount. Includes switch accessible to driver. Location: [#LOC].	$1,227
5450-0172	Light Whelen Pioneer Plus model PFP1 12V with vertical bail mount. Includes switch in cab accessible to driver (side facing lights switched seperately). Location(s): [#LOC].	$1,227
5450-0173	Light Whelen Pioneer model PFP1 12V with internal top raise pole mount (ROM model KR-9PFP1-I). Includes switch accessible to driver. Location: [#LOC].	$1,349
5450-0174	Light Whelen Pioneer Plus model PFP1AC 120V with recess mount. Location(s): [#LOC].	$1,270
5450-0175	Light Whelen Pioneer Plus model PFP2AC 120V with brow mount powder coated black. Location(s): [#LOC].	$2,035
5450-0176	Light Whelen Pioneer Plus LED model PFP2 12V with pedestal mount powder coated black. Includes switch in cab (side facing lights switched separately). Location(s): [#LOC].	$2,057
5450-0177	(Replaced with sales code 5450-209)Quartz light Fire Research Spectra 12V LED model SPA830-Q20 powder coated black with brow mount. Includes switch accessible to driver. Location: [#LOC].	$2,247
5450-0179	Light Whelen Pioneer model PFA2 with brow mount powder coated FLNA3225E-1. Includes switch in cab (driver and officer side facing lights switched separately). Location(s): [#LOC].	$1,726
5450-0180	(Replaced with sales code 5450-0208)Quartz light Fire Research Spectra 12V LED model SPA830-Q20 with brow mount. Includes switch accessible to driver. Location: [#LOC].	$2,201
5450-0181	Light Fire Research Spectra 12V LED model SPA510E-Q20-SW with internal pull-up pole. Includes switch accessible to driver. Location(s): [#LOC].	$2,521
5450-0183	Fire Research Spectra 12V LED scene light model SPA530E-Q20-SW-H with external push-up pole. Includes switch in cab accessible to driver. Location: [#LOC].	$2,519
5450-0185	Light Whelen Pioneer model PFA1 with brow mount. Includes switch in cab (driver and officer side facing lights switched separately). Location(s): [#LOC].	$1,086
5450-0186	Light Whelen Pioneer model PFA1 with vertical bail mount. Includes switch in cab (driver and officer side facing lights switched separately). Location(s): [#LOC].	$1,011
5450-0188	Quartz light MagnaFire 5000 500W/120V model KR-SB-555-W/2-I-SL with (special length) external pole. Location(s): [#LOC].	$1,049
5450-0189	Light Whelen Pioneer Plus model PFP1AC 120V with brow mount. Location(s): [#LOC].	$1,449
5450-0190	Fire Research Spectra 12V LED model SPA260-Q15 with surface mount. Includes switch accessible to driver. Location: [#LOC].	$1,697
5450-0191	Light Fire Research Spectra 120V LED model SPA600-K20-ON-SPA603 with 40" telescopic tripod pole. Location(s): :[#LOC].	$2,906
5450-0192	Light Fire Research Spectra 120V LED model SPA830-K20 with universal brow mount (EA). Location: [#LOC].	$2,201
5450-0193	Light Fire Research Spectra LED 110V model SPA510-K20 with internal pull-up pole. Location(s): [#LOC].	$2,250
5450-0195	Whelen Micro Pioneer Series Super LED Work/Scene Light Model MPR15W with 15 degree recess mount. Includes switch accessible to driver (side facing lights switched seperately). Location: [#LOC].	$666
5450-0196	Brow light brackets (not housing) shall be painted FLNA 10219. This shall include forward, rear and side facing if so equipped.	$158
5450-0197	Light Whelen Pioneer model PFP2 12V powder coated FLNA3225E-1 red with internal top raise pole mount (ROM model KR-9PFP2-S). Includes switch on light head. Location: [#LOC].	$1,942
5450-0198	Light Whelen Pioneer Plus model PFP2 12V with brow mount powder coated FLNA3225E-1 red. Includes switch in cab accessible to driver (driver and officer side facing lights switched separately). Location(s): [#LOC].	$2,168
5450-0199	Light Whelen Pioneer Plus model PFP1 12V with vertical bail mount powder coated FLNA3225E-1 red. Includes switch in cab accessible to driver (side facing lights switched seperately). Location(s): [#LOC].	$1,316
5450-0200	Fire Research Spectra 120V LED scene light model SPA530-K20-SW-H with external push-up pole. Location: [#LOC].	$2,519
5450-0201	Light Fire Research Spectra LED 12V model SPA570-Q20 without pole. Includes switch accessible to driver (driver and officer side facing lights switched seperately). Location(s): [#LOC].	$2,330

5450-0202	Quartz light Fire Research Spectra 120V LED model SPA260-K15 with surface mount. Includes switch accessible to driver (driver and officer side facing lights switched separately). Location: [#LOC].	$2,052
5450-0205	Floodlight Whelen/ROM model KR-SB-8PFP2AC-SL-I-TM with external mount tripod telepole powder coated black. Requires 110V receptacle. Location(s): [#LOC].	$2,559
5450-0206	Light Whelen 150W/120V model KR-7PFPAC2-HD with portable base. Requires 110V receptacle. Location(s): [#LOC].	$2,019
5450-0207	Light Whelen Pioneer Plus LED model PFP2 120V with pedestal mount powder coated black. Location(s): [#LOC].	$2,212
5450-0208	Quartz light Fire Research Spectra 12V LED model SPA802-Q20-02 with brow mount (EA). Includes switch accessible to driver. Location: [#LOC].	$2,201
5450-0209	Quartz light Fire Research Spectra 12V LED model SPA802-Q20-02 powder coated black with brow mount. Includes switch accessible to driver. Location: [#LOC].	$2,247
5450-0210	Light Fire Research Spectra LED 240V model SPA570-J20 without pole. Location(s): [#LOC].	$2,330
5450-0211	Light Fire Research Spectra 240V LED model SPA512-J20-SW with internal thru roof push up pole. Includes switch accessible to driver. Location(s): [#LOC].	$2,683
5450-0212	Quartz light Fire Research Focus 1500W/240V model FCA570-M15 without pole. Location(s): [#LOC].	$1,171
5450-0214	Light Whelen Pioneer Plus model PFP1 12V powder coated black with vertical bail mount. Includes switch in cab accessible to driver (side facing lights switched seperately). Location(s): driver and officer side rear of body up high.	$1,227
5450-0215	Light Whelen 12V Pioneer model PFP2 powder coated black with PBA203 recess mount. Includes switch accessible to driver (side facing lights switched separately). Location: driver and officer side centrally located in center area recessed into roof top compartment raise.	$1,976
5450-0216	Quartz light Fire Research Spectra 120V LED model SPA802-K20-02 with brow mount (EA). Location: [#LOC].	$2,201
5450-0218	Fire Research Evolution 12V LED model FCA210-V12 with recess mount powder coated black. Includes switch in cab accessible to driver. Location(s):[#LOC].	$1,710
5450-0220	Quartz light MagnaFire 750W/120V model KR-1936 with recess mount in diamond plate mounting box. Location(s): [#LOC].	$986
5450-0221	Quartz light MagnaFire 5000 750W/120V model KR-2556 with cab brow mount. Light head to be powder coated black. Location(s): [#LOC].	$827
5450-0222	Quartz light MagnaFire 750W/120V model KR-1336 with low profile mount. Light head to be powder coated black. Location(s): [#LOC]	$936
5450-0223	Quartz light MagnaFire 750W/120V model KR-SB-536-W/2-I with external pole. Light head to be powder coated black. Location(s): [#LOC].	$1,257
5450-0224	Quartz light Fire Research Focus 1000W/120V model FCA600-M10-ON-6F3 with telescopic tripod pole. Location(s): [#LOC].	$1,592
5450-0225	Light Whelen Pioneer model PFP2-P 12V with external bottom raise pole mount (ROM model KR-SB-5PFP2-W/2-S-I). Does not include a switch on light head. Location(s): [#LOC].	$2,157
5450-0226	Light Whelen Pioneer Plus model PFP1AC 120V with vertical bail mount. Location(s): [#LOC].	$1,394
5450-0227	Light Whelen Pioneer Plus LED model PFP1 12V with PBAPEDD pedestal mount. Includes switch in cab (side facing lights switched separately). Location(s): [#LOC].	$1,465
5450-0228	Light Whelen Pioneer model PFP1 12V with external bottom raise pole mount (Havis KR-SB-5PFP1-W/2-S-I). Includes switch on light head. Location(s): [#LOC].	$1,404
5450-0229	Floodlight Whelen/ROM model KR-SB-8PFP2AC-I-TM with external mount tripod telepole powder coated black. Pole length required shall be determined upon mounted location. Requires 110V receptacle. Location(s): [#LOC].	$2,559
5450-0230	Floodlight Whelen/ROM model KR-SB-8PFP2AC-I-TM with external mount tripod telepole. Pole length required shall be determined upon mounted location. Requires 110V receptacle. Location(s): [#LOC].	$2,559
5450-0231	Light Whelen Pioneer Plus LED model PFP2 12V with PBAPEDD pedestal mount powder coated black housing, mounting brackets applicable shall also be black. Includes switch in cab (side facing lights switched separately). Location(s): [#LOC].	$2,099
5450-0232	Light Whelen Pioneer Plus model PCP2AFSB 120VAC flood/spot with brow mount powder coated black. Location(s): [#LOC].	$2,096
5450-0233	Light Whelen Pioneer Plus model PCP2ASFB 120VAC spot/flood with brow mount powder coated black. Location(s): [#LOC].	$2,096
5450-0234	Light Whelen Pioneer Plus model PCP2AFSB 120VAC flood/spot with pedestal mount powder coated black. Location(s): [#LOC].	$2,093
5450-0235	Light Whelen Pioneer Plus model PCP2ASFB 120VAC spot/flood with pedestal mount powder coated black. Location(s): [#LOC].	$2,093
5450-0236	Light Whelen 150W/120V model KR-7PFPAC2-HD with portable base, powder coated black and Fire Power FP11 male pigtail. Requires 110V receptacle. Location(s): [#LOC].	$2,690

5450-0237	Light Whelen Pioneer Plus 12V model PCP2 flood/spot with pedistal mount. Includes switch in cab (driver and officer side facing lights switched separately). Location(s): [#LOC].	$2,093
5450-0238	Light Whelen Pioneer model PFP2 12V powder coated black with external bottom raise pole mount (ROM model KR-SB-5PFP2-W/2-S-I). Includes switch on light head. Location(s): [#LOC].	$2,157
5450-0239	Light Whelen Pioneer Plus model PCP2 flood/spot with pedestal mount (EA). Includes switch in cab (driver and officer side facing lights switched separately). Location(s): [#LOC].	$2,093
5450-0240	Light Whelen Pioneer Plus model PFP2 with Quest brow mount (EA) powder coated black. Includes switch in cab accessible to driver (driver and officer side facing lights switched separately). Location(s): [#LOC].	$2,079
5460-0000	Light tower Night Scan Powerlite NS3.0-3000M with four 750 watt 115 volt MagnaFire quartz light heads. Requires air brakes or air system and auxiliary air tank. Tower to be located [#LOC].	$20,131
5460-0001	Night Scan Powerlite NS3.0-4500M light tower with six 750 watt 115 volt MagnaFire quartz light heads. Control to be located next to the breaker box. Requires air brakes or air system and auxiliary air tank. Tower to be located [#LOC].	$21,939
5460-0002	Night Scan Powerlite NS4.5-3000M light tower with four 750 watt 115 volt MagnaFire quartz light heads. Control to be located next to the breaker box. Requires air brakes or air system and auxiliary air tank. Tower to be located [#LOC].	$20,694
5460-0003	Night Scan Powerlite NS4.5-4500M light tower with six 750 watt 115 volt MagnaFire quartz light heads. Control to be located next to the breaker box. Requires air brakes or air system and auxiliary air tank. Tower to be located [#LOC].	$22,290
5460-0004	Night Scan Powerlite NS4.5-6000A light tower with four 1500 watt 220 volt quartz light heads. Control to be located next to the breaker box. Requires air brakes or air system and auxiliary air tank. Tower to be located [#LOC].	$19,518
5460-0005	Night Scan Powerlite NS4.5-6000OPT light tower with four 1500 watt 230 volt Optimum quartz light heads. Control to be located next to the breaker box. Requires air brakes or air system and auxiliary air tank. Tower to be located [#LOC].	$19,256
5460-0006	Night Scan Powerlite NS4.5-9000OPT light tower with six 1500 watt 230 volt Optimum quartz light heads. Control to be located next to the breaker box. Requires air brakes or air system and auxiliary air tank. Tower to be located [#LOC].	$24,102
5460-0010	Will-Burt Night Scan extension harness. Required when tower is installed on custom cab roof or more than 20' from controller location.	$1,030
5460-0011	Night Scan Chief NS1.8-3000A light tower with two 1500 watt 230 volt quartz light heads. Control to be located next to the breaker box. Tower to be located [#LOC].	$11,867
5460-0013	Command Light light tower model CL 605. Includes (6) 500 watt quartz halogen lights and a green strobe. Location: [#LOC].	$18,839
5460-0014	Command Light light tower model CL 610. Includes (6) 650 watt quartz halogen lights and a green strobe. Location: [#LOC].	$16,878
5460-0019	Command Light light tower model CL 611. Includes (6) 1000 watt quartz halogen lights and a green strobe. Location: [#LOC].	$18,191
5460-0020	Night Scan Powerlite NS3.0-4500 Profiler light tower with three (3) 1500 watt, 230 volt Optimum Fire Research quartz light heads. Control to be located next to the breaker box. Requires air brakes or air system and an auxiliary air tank. Location: [#LOC].	$18,741
5460-0021	Command Light light tower model CL 615. Includes (6) 1500 watt quartz halogen lights and a green strobe. Location: [#LOC].	$18,191
5460-0022	Command Light Knight tower model KL450. Includes (6) 500 watt quartz halogen lights and a green strobe. Location: [#LOC].	$12,407
5460-0024	Command Light light tower model SL429-RT. Includes (2) 1500 watt quartz halogen lights. Control to be located next to the breaker box. Location: [#LOC].	$8,002
5460-0025	Night Scan Powerlite NS4.5-5400M light tower with six 900 watt 230 volt MagnaFire quartz light heads. Control to be located next to the breaker box. Requires air brakes or air system and auxiliary air tank. Tower to be located [#LOC].	$20,928
5460-0026	Night Scan Chief NS1.8-3000A light tower with two 1500 watt 230 volt quartz light heads. Control to be located next to the breaker box. Tower to be located [#LOC].	$11,867
5460-0027	Command Light tower option, back lighting.	$1,859
5460-0030	Command Light light tower model KL475HS. Includes (6) 750 watt Magnafire quartz halogen lights and a green strobe. Location: [#LOC].	$20,474
5460-0031	Night Scan Chief NS1.8-3000M light tower with four 750 watt 115 volt MagnaFire quartz light heads. Control to be located next to the breaker box. Tower to be located [#LOC].	$13,041
5460-0032	Command Light light tower model KL475HS. Includes (6) 750 watt Magnafire quartz halogen lights and a red strobe. Location: [#LOC].	$20,474
5460-0033	Night Scan Powerlite NS4.5-3600M light tower with four 900 watt 230 volt MagnaFire quartz light heads. Control to be located next to the breaker box. Requires air brakes or air system and auxiliary air tank. Tower to be located [#LOC].	$18,482
5460-0034	Command Light light tower model CL 615. Includes (4) 1500 watt quartz halogen lights, (2) 1000 watt Metal Halide light heads, and a green strobe. Locate [#LOC].	$19,239

5460-0036	Night Scan Chief NS2.3-3000M light tower with four 750 watt 115 volt MagnaFire quartz light heads. Control to be located next to the breaker box. Tower to be located [#LOC].	$12,261
5460-0038	Command Light light tower model CL 615. Includes (6) 1000 watt quartz halogen lights and a green strobe. Location: [#LOC].	$18,191
5460-0040	Night Scan Powerlite NS4.5-6000OPT light tower with four 1500 watt 230 volt Optimum quartz light heads. Light heads and base covers painted job color. Control to be located next to the breaker box. Requires air brakes or air system and auxiliary air tank. Tower to be located [#LOC].	$22,114
5460-0043	Night Scan Powerlite NS3.0-6000OPT light tower with four 1500 watt 230 volt Optimum quartz light heads. Control to be located next to the breaker box. Requires air brakes or air system and auxiliary air tank. Tower to be located [#LOC].	$21,939
5460-0045	Night Scan Powerlite NS4.5-3000M light tower with four 750 watt 115 volt MagnaFire quartz light heads. Control to be located next to the breaker box. Requires air brakes or air system and auxiliary air tank. Tower to be located [#LOC].	$20,343
5460-0046	Command Light light tower model KL450. Includes black powder coat finish with (6) 500 watt quartz halogen lights and a green strobe. Location: [#LOC].	$13,568
5460-0047	Night Scan Chief NS2.3-6000OPT light tower with four 1500 watt 230 volt FRC Optimum quartz light heads. Control to be located next to the breaker box. Requires air brakes or air system and auxiliary air tank. Tower to be located [#LOC].	$12,270
5460-0048	Command Light light tower model CL 615 with FRC Optimum lightheads. Includes (6) 1500 watt quartz halogen lights and a amber strobe. Location: [#LOC].	$22,632
5460-0050	Night Scan Powerlite NS 3.0-3600M light tower with four 900 watt 230 volt MagnaFire quartz light heads. Control to be located next to the breaker box. Requires air brakes or air system and auxiliary air tank. Tower to be located [#LOC].	$18,020
5460-0053	Command Light light tower model CL602A with Whelen PFP2AC lightheads. Includes (6) 150 watt LED lights and a amber strobe. Location: [#LOC].	$29,975
5460-0059	Command Light Knight tower model KL465. Includes (6) 650 watt quartz halogen lights. Location: [#LOC].	$12,407
5460-0060	Night Scan Powerlite NS3.0-4000OPT light tower with four 1000 watt 230 volt Optimum quartz light heads and D-TECH II safety system. Control to be located next to the breaker box. Requires air brakes or air system and auxiliary air tank. Tower to be located [#LOC].	$25,832
5460-0064	Night Scan Chief NS1.8-6000OPT light tower with four 1500 watt 230 volt FRC Optimum quartz light heads. Control to be located next to the breaker box. Requires air brakes or air system and auxiliary air tank. Tower to be located [#LOC].	$12,748
5460-0065	Night Scan Chief 1.8-3600M light tower with four 900 watt 230 volt quartz light heads. Control to be located next to the breaker box. Tower to be located [#LOC].	$14,275
5460-0066	Command Light light tower model CL602D with Whelen PFP2 12V lightheads. Includes (4) 150 watt LED lights and a amber strobe. Location: [#LOC].	$24,853
5460-0067	Night Scan Chief NS2.3-600LED Whelen light tower with (4) 150 watt 12V Whelen Pioneer PFP2 LED light heads. Control to be located next to the breaker box if equipped or the forward wall of L1 if unit has no breaker box. Tower to be located [#LOC].	$15,680
5460-0069	Command Light Knight tower model KL450. Includes (6) 500 watt quartz halogen lights and a amber strobe. Location: [#LOC].	$12,407
5460-0070	Night Scan Chief NS1.8-3000-4-MGN-110v light tower with four 750 watt 115 volt MagnaFire quartz light heads. Control to be located next to the breaker box. Tower to be located [#LOC].	$10,105
5460-0071	Night Scan Powerlite NS3.0-600WHL light tower with (4) 150 watt 120 volt Whelen Pioneer PFP2AC LED light heads. Control to be located next to the breaker box. Requires air brakes or air system and auxiliary air tank. Ahead of vista location requires riser. Tower to be located [#LOC].	$27,558
5460-0072	Night Scan Powerlite NS3.0-900WHL light tower with (6) 150 watt 120 volt Whelen Pioneer PFP2AC LED light heads. Control to be located next to the breaker box. Requires air brakes or air system and auxiliary air tank. Ahead of vista location requires riser. Tower to be located [#LOC].	$32,597
5460-0073	Night Scan Chief NS1.8-600WHL 120V Whelen light tower with (4) 150 watt 120 volt Whelen Pioneer PFP2AC LED light heads. Control to be located next to the breaker box. Tower to be located [#LOC].	$23,116
5460-0074	Night Scan Chief NS1.8-600 Whelen light tower with (4) 150 watt 12V Whelen Pioneer PFP2 LED light heads. Control to be located next to the breaker box. Tower to be located [#LOC].	$15,812
5460-0075	Night Scan Powerlite NS4.5-900WHL light tower with (6) 150 watt 120 volt Whelen Pioneer PFP2AC LED light heads. Control to be located next to the breaker box. Requires air brakes or air system and auxiliary air tank. Ahead of vista location requires riser. Tower to be located [#LOC].	$33,360
5460-0076	Night Scan Powerlite NS4.5-600WHL light tower with (4) 150 watt 120 volt Whelen Pioneer PFP2AC LED light heads. Control to be located next to the breaker box. Requires air brakes or air system and auxiliary air tank. Ahead of vista location requires riser. Tower to be located [#LOC].	$28,242
5460-0077	Night Scan Chief NS2.3-600LED Whelen light tower with (4) 150 watt 110V Whelen Pioneer PFP2AC LED light heads. Control to be located next to the breaker box. Tower to be located [#LOC].	$23,346

5460-0078	Night Scan Chief NS1.8-920SPA 120V FRC light tower with (4) 230 watt 120 volt FRC Spectra LED light heads. Control to be located next to the breaker box. Tower to be located [#LOC].	$20,886
5460-0079	Night Scan Chief NS1.8-920SPA 12V FRC light tower with (4) 230 watt 12 volt FRC Spectra LED light heads. Control to be located next to the breaker box. Tower to be located [#LOC].	$20,886
5460-0080	Night Scan Chief NS2.3-920SPA 12V FRC light tower with (4) 230 watt 12 volt FRC Spectra LED light heads. Control to be located next to the breaker box. Tower to be located [#LOC].	$21,038
5460-0081	Night Scan Chief NS2.3-920SPA 120V FRC light tower with (4) 230 watt 120 volt FRC Spectra LED light heads. Control to be located next to the breaker box. Tower to be located [#LOC].	$21,038
5460-0082	Night Scan Powerlite NS3.0-920SPA light tower with (4) 230 watt 120 volt FRC Spectra LED light heads. Control to be located next to the breaker box. Requires air brakes or air system and auxiliary air tank. Ahead of vista location requires riser. Tower to be located [#LOC].	$32,724
5460-0083	Night Scan Powerlite NS3.0-1380SPA light tower with (6) 230 watt 120 volt FRC Spectra LED light heads. Control to be located next to the breaker box. Requires air brakes or air system and auxiliary air tank. Ahead of vista location requires riser. Tower to be located [#LOC].	$37,595
5460-0085	Night Scan Powerlite NS4.5-1380SPA light tower with (6) 230 watt 120 volt FRC Spectra LED light heads. Control to be located next to the breaker box. Requires air brakes or air system and auxiliary air tank. Ahead of vista location requires riser. Tower to be located [#LOC].	$37,850
5460-0086	Command Light light tower model CL 607. Includes (6) 750 watt ROM Magnafire quartz halogen lights and a green strobe. Location: [#LOC].	$22,776
5460-0087	Command Light light tower model CL 607. Includes (6) 750 watt FRC Optimum quartz halogen lights and a green strobe. Location: [#LOC].	$22,776
5460-0088	Command Light light tower model CL602A with Whelen PFP2AC lightheads. Includes (4) 150 watt LED lights. Location: [#LOC].	$28,943
5460-0089	Command Light light tower model CL602A with FRC 120V Spectra lightheads. Includes (4) 220 watt LED lights. Location: [#LOC].	$28,943
5460-0090	Command Light light tower model CL602A with FRC 120V Spectra lightheads. Includes (6) 220 watt LED lights. Location: [#LOC].	$29,975
5460-0091	Command Light light tower model CL602D with FRC Spectra 12V lightheads. Includes (4) 220 watt LED lights. Location: [#LOC].	$24,853
5460-0092	Command Light light tower model KL475OPT. Includes (6) 750 watt FRC Optimum quartz halogen lights. Location: [#LOC].	$20,487
5460-0093	Command Light light tower model KL415A. Includes (6) 220 watt 120V FRC Spectra LED lights. Control to be located adjacent to breaker box. Location: [#LOC].	$27,862
5460-0094	Command Light light tower model KL415A. Includes (6) 150 watt 120V Whelen Pioneer PFP2 LED lights. Control to be located adjacent to breaker box. Location: [#LOC].	$27,862
5460-0095	Command Light light tower model KL415A. Includes (4) 220 watt 120V FRC Spectra LED lights. Control to be located adjacent to breaker box. Location: [#LOC].	$22,777
5460-0096	Command Light light tower model KL415A. Includes (4) 150 watt 120V Whelen Pioneer PFP2 LED lights. Control to be located adjacent to breaker box. Location: [#LOC].	$22,777
5460-0097	Command Light light tower model KL415D. Includes (4) 220 watt 12V FRC Spectra LED lights. Control to be located adjacent to breaker box. Location: [#LOC].	$21,505
5460-0098	Command Light light tower model KL415D. Includes (4) 150 watt 12V Whelen Pioneer PFP2 LED lights. Control to be located adjacent to breaker box (unless otherwise specified). Location: [#LOC].	$21,505
5460-0100	Command Light light tower model SL422D. Includes (2) 150 watt Whelen 12V Pioneer lights. Control to be located next to the breaker box. Location: [#LOC].	$11,076
5460-0101	Command Light light tower model CL602A-2MH. Includes (4) 110V 220 watt FRC Spectra LED lights, (2) 230V 1000W metal halide lights and a green strobe. Location: [#LOC].	$31,486
5460-0102	Night Scan Chief NS1.8-3000OPT light tower with four 750 watt FRC Optimum quartz light heads. Control to be located next to the breaker box. Tower to be located on [#LOC].	$12,540
5460-0103	Night Scan Powerlite NS3.0-900WHL light tower with (6) 150 watt 120 volt Whelen Pioneer PFP2AC LED light heads. Control to be located next to the breaker box. Requires air brakes or air system and auxiliary air tank. Tower to be located rearward on flat roof (non vista) and mounted side to side and hinged to driver. Placement to allow 45 degree shield to be placed in normal vista rise locations to allow cab to appear to have vista roof.	$32,597
5460-0106	Strobe light for Command Light tower. Color: [#COL].	$319
5470-0000	Receptacle twist lock 15A/110V 3 wire NEMA L5-15 with cover plate. Location: [#LOC].	$280
5470-0001	Receptacle twist lock 20A/110V 3 wire NEMA L5-20 with cover plate. Location: [#LOC].	$292
5470-0002	Receptacle twist lock 30A/110V 3 wire NEMA L5-30 with cover plate. Location: [#LOC].	$315
5470-0003	Receptacle household 15A/110V duplex 3-prong NEMA 5-15 with cover plate. Location: [#LOC].	$255
5470-0004	Receptacle household 20A/110V duplex 3-prong NEMA 5-20 with cover plate interior mounted wired to inlet receptacle. Location: [#LOC].	$275
5470-0005	Receptacle household 15A/110V Daniel Woodhead duplex 3 wire NEMA 5-15 w/Daniel Woodhead cover plate. Location: [#LOC]	$509

5470-0006	Receptacle twist lock 15A/110V Daniel Woodhead 3 wire NEMA L5-15 w/Daniel Woodhead cover plate. Location: [#LOC]	$458
5470-0007	Receptacle twist lock 15A/220V Daniel Woodhead 3 wire NEMA L6-15 w/Daniel Woodhead cover plate. Location: [#LOC]	$578
5470-0008	Receptacle twist lock 20A/110V Daniel Woodhead 3 wire NEMA L5-20 w/Daniel Woodhead cover plate. Location: [#LOC].	$472
5470-0009	Receptacle twist lock 20A/220V Daniel Woodhead 3 wire NEMA L6-20 w/Daniel Woodhead cover plate. Location: [#LOC]	$623
5470-0010	Receptacle twist lock 20A 110V/220V Daniel Woodhead 4 wire NEMA L14-20 w/Daniel Woodhead cover plate. Location: [#LOC]	$646
5470-0011	Receptacle twist lock 15A/220V 3 wire NEMA L6-15 with cover plate. Location: [#LOC]	$407
5470-0012	Receptacle twist lock 20A/220V 3 wire NEMA L6-20 with cover plate. Location: [#LOC].	$407
5470-0013	Receptacle twist lock 20A 110V/220V 4 wire NEMA L14-20 with cover plate. Location: [#LOC].	$554
5470-0014	Receptacle twist lock 30A/220V 3 wire NEMA L6-30 with cover plate. Location: [#LOC].	$554
5470-0015	Receptacle twist lock 30A 110V/220V 4 wire NEMA L14-30 with cover plate. Location: [#LOC]	$550
5470-0016	Receptacle shoreline 30A/110V with auto transfer switch. The receptacle shall be located [#LOC].	$940
5470-0017	Receptacle household 20A/110V duplex 3-prong NEMA 5-20 with cover plate. Location: [#LOC].	$266
5470-0018	Receptacle shoreline 50A/220V with auto transfer switch. The receptacle shall be located [#LOC].	$949
5470-0019	Receptacle FirePower 20A/110V model FP-11 with cover plate. Location: [#LOC].	$323
5470-0020	Receptacle 12V military with A pin Positive, B pin Negative, C pin Blank. Location: [#LOC]	$220
5470-0021	12 volt power point wired battery hot. Location [#LOC]	$53
5470-0024	Receptacle 15A/110V duplex with (1) 3-prong NEMA 5-15 and (1) twist lock NEMA L5-15 with cover plate. Location: [#LOC].	$298
5470-0025	Receptacle household 30A/110V 3-prong NEMA 5-30 with cover plate. Location: [#LOC]	$304
5470-0026	Receptacle household 15A/110V duplex 3-prong NEMA 5-15 with cover plate interior mounted wired to inlet receptacle. Location: [#LOC].	$255
5470-0027	Household switch with weaterproof cover located near receptacle at [#LOC]. Switch to operate single leg of this duplex receptacle.	$460
5470-0028	Receptacle household 20A/110V Daniel Woodhead duplex 3 wire NEMA 5-20 w/Daniel Woodhead cover plate. Location: [#LOC].	$523
5470-0029	Receptacle Hubbell twist lock 20A 110V/250V 3 wire NON-NEMA with cover plate. Location: [#LOC].	$348
5470-0030	Receptacle twist lock 15A/110V 3 wire NEMA L5-15 with yellow Daniel Woodhead cover plate. Location: [#LOC].	$341
5470-0031	Receptacle twist lock 15A/110V duplex 3 wire NEMA L5-15 with yellow Daniel Woodhead cover plate. Location: [#LOC]. Top duplex will be hooked to toogle switch next to it.	$578
5470-0034	Receptacle shoreline 50A/220V. The receptacle shall be located [#LOC]. No additional breaker box is included in this code.	$254
5470-0036	9 outlet Stanley model 31610 household 15A/110V power strip wired to inlet receptacle. Location: [#LOC].	$166
5470-0039	Receptacle NON-NEMA locking 20A 120V/250V Daniel Woodhead model 67W08 w/Daniel Woodhead cover plate. Location: [#LOC].	$646
5470-0040	Receptacle twist lock 50A/220V 3 wire NEMA L6-50 with cover plate. Location: [#LOC].	$675
5470-0042	Auto-Eject receptacle inlet 30 amp 120 volt with auto transfer switch. The receptacle shall be located [#LOC] and with a [#COL] cover.	$1,367
5470-0048	Service 30A/220V 4 wire with junction box. Location: [#LOC].	$430
5470-0049	Receptacle household 15A/110V double gang (four outlets) 3-prong NEMA 5-15 with cover plate interior mounted wired to inlet receptacle. Location:[#LOC].	$509
5470-0051	6 outlet household 20A/110V power strip wired to inlet receptacle. Location: [#LOC].	$191
5470-0053	Receptacle inlet 110 VAC, 20 Amp twist lock with a [#COL] cover. Location: [#LOC].	$256
5470-0054	Receptacle household 15A/110V duplex 3-prong NEMA 5-15 with cover plate interior mounted wired to generator (not wired to inlet/shoreline). Location: [#LOC].	$255
5470-0055	Receptacle household 15A/110V duplex 3-prong NEMA 5-15 with cover plate. This receptacle shall be GFCI protected and have a push button reset on the receptacle. Location: [#LOC].	$277
5470-0057	Receptacle household 20A/110V duplex 3-prong NEMA 5-20 with cover plate interior mounted wired to generator (not wired to inlet/shoreline). Location: [#LOC].	$266
5500-0003	Code3 V-con #3692 siren on cab dash.	$587
5500-0004	Code3 V-Con #3692 siren recessed mounted.	$677
5500-0005	Federal Signal electronic EQ2B-EF siren. Includes 200 watt speaker with square "E-ONE" grille. Speaker location: [#LOC].	$3,412
5500-0006	Federal electronic e-Q2B siren. Includes "Q" grille. Speaker location: [#LOC].	$3,869
5500-0007	Federal MS4000 siren recessed mounted.	$769
5500-0009	Federal PA300 electronic siren recessed mounted.	$635
5500-0010	Federal Q2B siren - flush mounted in bumper. Location: [#LOC].	$2,719
5500-0011	Federal Q2B siren - Pedestal mounted on bumper. Location: [#LOC].	$2,449
5500-0012	Prewire for Federal Q2B mechanincal siren.	$253

5500-0014	Unitrol #480K siren.	$1,450
5500-0015	Whelen model 295SLSA1 siren with microphone (replaced 295HFSA1).	$843
5500-0016	Code 3 V-Con #3672 siren recessed mounted.	$677
5500-0017	Whelen model 295HFSM1 siren with mechanical siren tone and microphone. N/A in California.	$927
5500-0019	Code 3 #3997 siren. Requires (1) 200 watt or (2) 100 watt speakers.	$1,557
5500-0020	Federal PA4000 siren recessed mounted.	$679
5500-0022	Federal PA300 siren mounted on electrical access panel between the driver and officer front seats.	$635
5500-0027	Signal Vehicle Products model SS741MG siren recessed mounted.	$535
5500-0028	Integrated Siren System with dual control heads, separate PA controls with remote mircrophone and volume switch.	$777
5500-0030	Code 3 #3997R siren. Requires (1) 200 watt or (2) 100 watt speakers.	$1,557
5500-0031	Whelen model 295HFSA7 siren with microphone.	$1,319
5500-0032	Federal / Unitrol #U480K-4 siren.	$1,398
5500-0034	Federal Rumbler secondary siren. Includes amp, timer, and two speakers mounted under vehicle. Requires control switch.	$1,112
5500-0036	Whelen model 295HFSC9 siren with microphone. N/A in California.	$1,059
5500-0037	Federal PA300 siren recessed mounted. Microphone to be removed and a plug is to be installed in the wiring hole.	$635
5500-0038	Federal / Unitrol #UTM4 siren.	$1,414
5500-0040	Powercall DX5200 siren control. For use with (1) 200 watt speaker or up to (2) 100W speakers.	$847
5500-0041	Federal electronic Q2B-EF siren. Includes two ES100 speakers with square "E-ONE" grills. Speaker location: [#LOC].	$3,531
5500-0044	Whelen model 295HFSA7 siren with microphone. Microphone to be removed (shipped loose) and a plug is to be installed in the wiring hole.	$1,319
5500-0045	Whelen model 295SLSC1 siren with plug-in microphone. N/A in California.	$843
5500-0048	Federal PA300 100W siren recessed mounted.	$595
5500-0049	Whelen Howler secondary siren. Includes amp, timer, and two speakers mounted under vehicle.	$1,125
5500-0050	Integrated Siren System with dual control heads. No microphone or volume control.	$777
5500-0051	Federal PA300R siren with single control. PA control and volume switch located on electrical access panel.	$764
5500-0052	Federal PA640 electronic siren recessed mounted.	$635
5500-0054	Federal / Unitrol #UTM1 siren.	$1,020
5500-0059	Whelen model 295SL100 siren with microphone (replaced 295HF100).	$796
5500-0060	Whelen Howler secondary siren. Includes amp, timer, and two speakers mounted under gravelshield.	$1,125
5500-0063	Federal electronic Q2B-EF siren. Includes two ES100 speakers. Speaker location: [#LOC].	$3,531
5500-0066	Whelen model 295SLSA1 siren without microphone.	$843
5500-0067	Whelen model 295SLSC1 siren without microphone. N/A in California.	$843
5510-0002	Speaker Federal BP200 mounted through bumper. Location: [#LOC].	$1,064
5510-0003	Speaker Federal CP100S pedestal mounted. Location: [#LOC].	$695
5510-0006	Speaker Federal ES100-MSBMT. Location: [#LOC].	$412
5510-0007	Speaker Cast Products SA2401 100W thru bumper. Location: [#LOC].	$464
5510-0008	Speaker Cast Products SA3501 100W through bumper. Location: [#LOC].	$513
5510-0009	Federal TS100-N speaker mounted on pump panel.	$419
5510-0012	Speaker Federal TS100 through bumper. Location: [#LOC].	$493
5510-0013	Speaker Federal Dynamax MS100-EF thru bumper. Location: [#LOC].	$493
5510-0016	Code 3 PB100C electronic siren speaker recessed in front bumper. Location: [#LOC].	$483
5510-0017	Speaker Cast Products SA2403 100W thru bumper. Location: [#LOC].	$464
5510-0018	Whelen SA122FMP electronic siren speaker recessed in front bumper. Location: [#LOC].	$510
5510-0021	Speaker Federal TS100-N mounted on driver side front compartment face.	$419
5510-0023	Speaker Atkinson Dynamics (Federal) mounted on pump panel.	$565
5510-0026	Code 3 FM100C electronic siren speaker recessed in front bumper. Location: [#LOC].	$556
5510-0027	Speaker volume control on pump panel for pump panel mtd speaker. Locate next to speaker. Includes 16-18 gauge audio cable run from volume control to center overhead area, leave a 30" coil of wire.	$400
5510-0029	Speaker, Federal Signal Dynamax ES100 with "E-ONE" grille through bumper. Location: [#LOC].	$493
5510-0031	Whelen SA314P electronic siren speaker recessed in front bumper with polished trim ring. Location: [#LOC].	$687
5510-0041	Speaker, Federal Signal Dynamax ES100. Location: [#LOC].	$493
5510-0042	Speaker Atkinson Dynamics (Federal) model AD-SF-25 flush mounted with volume controls. Location: [#LOC].	$624
5510-0045	Speaker, Federal Signal Dynamax ES100 with "E-ONE" grille. Location: [#LOC].	$493
5550-0006	Whelen LED 6/2/2 lower level warning light package. Includes (6) 600 series (2) 400 series and (2) 500 series light heads w/weatherproof connectors. Locate side facing lights: [#LOC].	$2,926

5550-0007	Whelen LED 8/2 lower level warning light package. Includes (8) 600 series and (2) 500 series light heads w/weatherproof connectors. Locate side facing lights: [#LOC].	$3,152
5550-0008	Whelen strobe/LED 6/2/2 lower level warning light package. Includes (6) 600 series strobes, (2) 400 series strobes and (2) 500 series LED light heads w/weatherproof connectors and required power supplies. Locate side facing lights: [#LOC].	$2,823
5550-0010	Whelen 600 series LED lower level warning light package. Includes (10) LED light heads w/weatherproof connectors. Locate side facing lights: [#LOC].	$3,467
5550-0012	Whelen 600 series strobe lower level warning light package. Includes (10) strobe lights w/weatherproof connectors and required power supplies. Locate side facing lights: [#LOC].	$3,262
5550-0013	Federal Signal strobe/halogen lower level warning light package. Includes (8) strobe, (2) GH1F halogen lts and required power supplies. Locate side facing lights: [#LOC].	$2,753
5550-0014	Federal Signal GS5 strobe lower level warning light package. Includes (10) Lights and required power supplies. Locate side facing lights: [#LOC].	$3,142
5550-0021	Federal Signal GL5 LED lower level warning light package. Includes Ten (10) GL5-R lights. Locate side facing lights: [#LOC].	$2,514
5550-0028	Code3 strobe/halogen 6/4 lower level warning light package. Includes (6) 40 series strobe lights and (4) OL135 halogen lights and required power supplies. Locate side facing lights: [#LOC].	$4,252
5550-0029	Code3 halogen 4/6 lower level warning light package. Includes Includes (6) 41 series and (4) OL135 halogen lights. Locate side facing lights: [#LOC].	$2,136
5550-0030	Code3 model 65 red LED lower level warning light package. Includes (10) LED lights. Locate side facing lights: [#LOC].	$3,663
5550-0049	Code3 LED 6/2/2 lower level warning light package. Includes (8) model 65 red LED and (2) LXEX1F-R LED lights. Includes chrome bezels where applicable. Locate side facing lights: [#LOC].	$2,899
5550-0052	Flash rate for Federal LED lower level warning lights to be set at pattern 2, alternating triple flash (102 TFPM).	$81
5550-0053	Flash rate for Federal LED lower level warning lights to be set at pattern 8, alternating single flash (150 FPM).	$81
5550-0054	Whelen 600 series Super LED lower level warning light package. Includes (10) red LED light heads w/chrome flanges. Locate side facing lights: [#LOC].	$2,752
5550-0055	Federal Signal QuadraFlare LED lower level warning light package. Includes (10) QL64XF-R LED light heads with bezels. Locate side facing lights: [#LOC].	$2,301
5550-0059	Whelen Super LED lower level warning light package. Includes (8) red 600 LED light heads and (2) red 500 LED light heads w/chrome flanges. Locate side facing lights: [#LOC].	$2,600
5550-0067	Flash rate for Federal QuadraFlare LED lower level warning lights to be set at pattern 4, alternating quad flash (75 QFPM).	$81
5550-0069	Flash rate for Federal QuadraFlare LED lower level warning lights to be set at pattern 5, alternating double flash (150 DFPM).	$81
5550-0072	Whelen 600 series Super LED lower level warning light package. Includes (8) red/amber and (2) red LED light heads w/chrome flanges. Locate side facing lights: [#LOC].	$3,102
5550-0073	Whelen Super LED lower level warning light package. Includes (8) 600 Super LED light heads and (2) 900 Super LED light heads w/chrome flanges where applicable. Locate side facing lights: [#LOC].	$3,028
5550-0091	Whelen strobe/LED 6/2/2 lower level warning light package. Includes (6) 600 series strobes, (2) 700 series strobes and (2) 500 series LED light heads w/weatherproof connectors and required power supplies. Locate side facing lights: [#LOC].	$2,886
5550-0092	Whelen strobe/LED 6/2/2 lower level warning light package. Includes (6) 600 series super LED, (2) 700 series split lens strobes and (2) 500 series super LED light heads w/weatherproof connectors and required power supplies. Locate side facing lights: [#LOC]	$3,291
5550-0093	Whelen Super LED lower level warning light package. Includes (6) 600 LED red light heads, (2) 400 LED red light heads and (2) 500 red LED light heads w/chrome flanges. Locate side facing lights: [#LOC]	$2,480
5550-0094	Federal Signal strobe lower level warning light package. Includes (8) GS5 strobes and (2) GS2 strobes lts. All lenses to be blue except mid-body which are red. Locate side facing lights: [#LOC]	$3,142
5550-0095	Whelen Super LED lower level warning light package. Includes (7) 600 red LED light heads, and (3) 600 blue LED light head w/chrome flanges. Locate side facing lights: [#LOC]	$2,752
5550-0096	Weldon Diamondback V46 LED lower level warning light package. Includes (10) red LED light heads w/chrome flanges. Locate side facing lights: [#LOC].	$2,794
5550-0097	Whelen 400 series linear Super LED lower level warning light package. Includes (10) red LED light heads w/chrome flanges. Locate side facing lights: [#LOC].	$4,208
5550-0098	(Obsolete)Federal Signal QuadraFlare LED lower level warning light package. Includes (8) QL64XF-R LED light heads with bezels and (2) Model 360501-04 LED light heads side forward mounted. Locate side facing lights: [#LOC].	$1,932
5550-0099	Whelen Super LED lower level warning light package. Includes (4) red 600 LED light heads, (4) red/clear 600 split LED light heads and (2) red 500 LED light heads w/chrome flanges. Locate side facing lights: [#LOC].	$3,456

5550-0100	Whelen Super LED lower level warning light package. Includes (6) red 600 LED light heads and (4) red 500 LED light heads w/chrome flanges. Locate side facing lights: [#LOC].	$2,600
5550-0104	Whelen 600 series Super LED lower level warning light package. Includes (8) red and (2) red/white LED light heads w/chrome flanges. Locate side facing lights: [#LOC].	$3,210
5550-0106	Whelen Super LED lower level warning light package. Includes (6) 600 red LED light heads, (2) 400 amber LED light heads and (2) 500 red LED light heads w/chrome flanges. Locate side facing lights: [#LOC].	$2,480
5550-0107	Whelen Super LED lower level warning light package. Includes (8) red 600 LED light heads and (2) red 500 LED light heads w/chrome flanges. Locate side facing lights: [#LOC].	$2,600
5550-0109	Federal Signal QuadraFlare LED lower level warning light package. Includes (5) QL64XF-R LED light heads with bezels and (5) QL64XF-B LED light heads with bezels. Lights to alternate red/blue around unit; see specificaton. Locate side facing lights: [#LOC].	$2,301
5550-0110	Whelen Super LED lower level warning light package. Includes (4) red 600 LED light heads, (4) blue 600 LED light heads, (1) red 500 LED light head and (1) blue 500 LED light head. LIghts to alternate red/blue around unit; see specification. Locate side facing lights: [#LOC].	$2,600
5550-0114	Weldon Diamondback V46 LED lower level warning light package. Includes (10) red LED light heads w/clear lenses and chrome flanges. Locate side facing lights: [#LOC].	$2,794
5550-0117	Whelen Super LED lower level warning light package. Includes (6) 600 Super LED light heads (2 red forward/2 red rearward/2 amber rearward) and (6) side facing 500 Super LED red light heads w/chrome flanges where applicable. Requires additional side facing lights midship to meet blocking mode. Locate side facing lights: [#LOC].	$3,547
5550-0123	Whelen M6 Super LED lower level warning light package. Includes (8) red M6R LED light heads and (2) red 500 Super LED light heads w/chrome flanges. Locate side facing lights: [#LOC].	$2,897
5550-0125	Whelen M6RC Super LED lower level warning light package. Includes (8) red M6RC LED light heads and (2) red 500 Super LED light heads w/chrome flanges and clear lenses. Locate side facing lights: [#LOC].	$2,897
5550-0127	Federal Signal QuadraFlare LED lower level warning light package. Includes (10) QL64XFC-R LED light heads with clear lenses and bezels. Locate side facing lights: [#LOC].	$2,301
5550-0129	Whelen 600 series Super LED lower level warning light package. Includes (5) red LED light heads w/chrome flanges and (5) blue LED light heads w/chrome flanges. LIghts to alternate red/blue around unit; see specification. Locate side facing lights: [#LOC].	$2,752
5550-0130	Weldon Diamondback V46W-C/V26W-C LED lower level warning light package. Includes (8) red V46 LED light heads w/clear lenses and (2) red V26 LED light heads w/clear lenses. Locate side facing lights: [#LOC].	$2,699
5550-0131	Whelen Super LED lower level warning light package. Includes (8) 600 LED light heads (7 red,1 blue rear facing officer side) and (2) red 500 LED light heads w/chrome flanges. Locate side facing lights: [#LOC].	$2,600
5550-0132	Whelen Super LED lower level warning light package. Includes (8) red 600 LED light heads and (2) red TIR3 LED light heads grommet mounted. Locate side facing lights: [#LOC].	$2,476
5550-0133	Whelen 500 Series Super LED upper level rear warning light package. Includes (4) red Whelen 500 Super LED TIR6 lights with chrome bezels and clear lenses. Includes weatherproof connectors. Locate (1) rear facing each side up high, (1) side facing each side up high rearward on the body.	$906
5550-0135	Whelen Super LED lower level warning light package with clear lenses. Includes (6) red 600 LED light heads, (2) red/clear 600 split LED light heads (side facing forward position) and (2) red 500 LED light heads w/chrome flanges. Locate side facing lights: [#LOC].	$3,195
5550-0148	Whelen M6 Super LED lower level warning light package. Includes (6) red M6RC LED light heads with clear lenses and chrome flanges, (4) split red/clear M6D light heads with clear lenses and chrome flanges. See specifications for locations of split lights. Locate side facing lights: [#LOC].	$3,308
5550-0149	Whelen M6 Super LED lower level warning light package. Includes (10) red M6R LED light heads w/chrome flanges. Locate side facing lights: [#LOC].	$3,263
5550-0152	Federal Signal QuadraFlare LED lower level warning light package. Includes (8) QL64XF-R red LED light heads with bezels and (2) forward facing QL64SFC-RC split red/clear LED light heads with bezels. Locate side facing lights: [#LOC].	$2,387
5550-0154	Whelen M6 Super LED lower level warning light package. Includes (1) red M6RC LED light head with clear lens and chrome flange, (1) blue M6BC with clear lens and chrome flange and (8) split red/clear M6D light heads with clear lenses and chrome flanges. Locate side facing lights: [#LOC].	$3,541
5550-0155	Whelen Super LED lower level warning light package with clear lenses. Includes (8) 600 LED light heads (6 red,2 blue; (1) forward and (1) rearward facing officer side) and (2) red 500 LED light heads w/chrome flanges. Locate side facing lights: [#LOC].	$2,600
5550-0158	Federal Signal Viper EXT LED upper level rear warning light package. Includes (9) Viper EXT red LEDs; (5) center upper body rear facing, (2) driver upper body corner side facing and (2) officer upper body corner side facing.	$1,707

5550-0159	Whelen M6 Super LED lower level warning light package. Includes (6) M6RC red LED light heads with clear lenses, (2) M9RC red LED light heads with clear lenses and (2) red 500 Super LED light heads w/chrome flanges and clear lenses. Locate side facing lights: [#LOC].	$3,722
5550-0164	Whelen 600 series Super LED lower level warning light package. Includes (10) red LED light heads w/clear lenses and chrome flanges. Locate side facing lights: [#LOC].	$2,752
5550-0169	Federal Signal QuadraFlare LED lower level warning light package. Includes (10) QL64XF-B blue LED light heads with bezels. Locate side facing lights: [#LOC].	$2,301
5550-0170	Whelen Super LED lower level warning light package. Includes (8) 600 Series (4) red & (4) blue, (2) 400 Series (1) red & (1) blue and chrome flanges alternating in colors. Locate side facing lights: at forward most position, in rear wheelwell offset to front, and on tailboard mounted light box above rear tailboard. Lights will alternate color from light to light. All lights will have clear lenses with colored LEDs.	$2,752
5550-0171	Whelen Super LED lower level warning light package. Includes (4) red 600 LED light heads, (4) blue 600 LED light heads, (1) red 500 LED light head and (1) blue 500 LED light head. Lights to be driver side red, officer side blue; see specification. Locate side facing lights: [#LOC].	$2,600
5550-0173	Whelen M6 Super LED lower level warning light package. Includes (8) red M6R LED light heads and (2) red M2R LED light heads. Locate side facing lights: [#LOC].	$2,897
5550-0178	Whelen Super LED lower level warning light package with clear lenses. Includes (8) red 600 LED light heads and (2) red 500 LED light heads w/chrome flanges. Locate side facing lights: [#LOC].	$2,600
5550-0180	Whelen M6 Super LED lower level warning light package. Includes (10) red M6 LED light heads w/clear lenses and chrome flanges. Locate side facing lights: [#LOC].	$3,263
5550-0181	Whelen Super LED lower level warning light package with clear lenses. Includes (8) red/clear M6 split LED light heads and (2) split red/clear M2 LED light heads w/chrome flanges. State of Maryland only. Locate side facing lights: [#LOC].	$3,573
5550-0183	Whelen M6 Super LED lower level warning light package. Includes (8) red M6R LED light heads and (2) red TIR3 LED light heads. Locate side facing lights: [#LOC].	$2,897
5550-0188	Whelen M6 Super LED lower level warning light package. Includes (6) red M6R and (4) blue M6B LED light heads w/chrome flanges. See specifications for color locations. Locate side facing lights: [#LOC].	$3,263
5550-0189	Whelen Super LED lower level warning light package. Includes (7) red 600 LED light heads, (1) blue 600 LED light heads and (2) red 500 LED light heads. Locate side facing lights: [#LOC].	$2,600
5550-0190	Federal Signal QuadraFlare LED lower level warning light package. Includes (5) QL64XF-R LED light heads with bezels and (5) QL64XF-B LED light heads with bezels. Lights to alternate red/blue around unit; see specificaton. Locate side facing lights: [#LOC].	$2,301
5550-0191	Weldon Diamondback V46/V79 LED lower level warning light package. Includes (8) red V46 LED light heads w/clear lenses and (2) red V79 LED light heads w/clear lenses. Locate side facing lights: [#LOC].	$3,280
5550-0192	Federal Signal QuadraFlare LED lower level warning light package. Includes (8) QL64XF-R LED light heads with bezels and (2) IMPAXX LED model IPX302-4 light heads. Locate side facing lights: [#LOC].	$2,063
5550-0194	Federal Signal QuadraFlare LED lower level warning light package. Includes (4) QL64XF-R LED light heads, (4) QL64XF-B LED light heads, (1) IMPAXX LED model IPX302-3 light head and (1) IMPAXX LED model IPX302-4 light head. Lights to alternate red/blue around unit; see specification. Locate side facing lights: [#LOC].	$2,100
5550-0197	Weldon Diamondback LED lower level warning light package. Includes (4) red V46 LED light heads w/clear lenses, (4) red V79 LED light heads w/clear lenses and (2) red V26 LED light heads w/clear lenses. Locate side facing lights: [#LOC].	$3,672
5550-0210	Federal Signal QuadraFlare LED lower level warning light package. Includes (8) Quadraflare light heads, (7) QL64XF-R (red) LED lights and (1) QL64XF-B (blue) LED light with bezels and (2) IMPAXX LED model IPX302-4 light heads. Locate side facing lights: [#LOC].	$2,063
5550-0211	Whelen Super LED lower level warning light package with clear lenses. Includes (8) 600 LED light heads (4 red driver's side, 4 blue officer's side) and (2) 500 LED light heads (1 red driver's side, 1 blue officer's side)w/chrome flanges. Locate side facing lights: [#LOC].	$2,600
5550-0214	Whelen Super LED lower level warning light package with clear lens. Includes (7) red 600 LED light heads, (1) blue 600 LED light heads and (2) red 500 LED light heads. Locate side facing lights: [#LOC].	$2,600
5550-0225	Whelen M6 Super LED lower level warning light package. Includes (8) red M6RC LED light heads with clear lens and (2) red M2RC LED light heads with clear lens. Locate side facing lights: [#LOC].	$2,897
5550-0227	Whelen M6/M7/600/IONWR Super LED lower level warning light package. Includes (2) red M6R LED light heads, (4) split red/clear M7D light heads, (2) 600 Series Super LED light heads, Red with clear lenses and (2) red IONWR LED light heads. See specification for location of split lights. Locate side facing lights: [#LOC].	$3,415

5550-0234	Whelen M6RC Super LED lower level warning light package. Includes (8) red M6RC LED light heads and (2) red 500 Super LED light heads w/chrome flanges and clear lenses. Locate side facing lights: [#LOC].	$2,897
5550-0236	Whelen M6 Super LED lower level warning light package. Includes (6) red M6R LED light heads, (2) blue M6B LED light heads (1 officer front and 1 officer rear facing) and (2) red M2R LED light heads. Locate side facing lights: [#LOC].	$2,897
5550-0238	Federal Signal QuadraFlare LED lower level warning light package. Includes (3) QL64XF-R LED light heads, (3) QL64XF-B LED light heads, (2) IMPAXX LED model IPX302-3 light head and (2) IMPAXX LED model IPX302-4 light head. Lights to alternate red/blue around unit; see specification. Locate side facing lights: [#LOC].	$2,100
5550-0240	Whelen Super LED lower level warning light package. Includes (8) red 600 LED light heads and (2) red 500 LED light heads w/chrome flanges. Locate side facing lights: [#LOC].	$2,600
5550-0241	Whelen M6 Super LED lower level warning light package. Includes (6) M6R red LED light heads, (2) M9R red LED light heads and (2) red M2R red Super LED light heads. Locate side facing lights: [#LOC].	$3,722
5550-0242	Whelen Super LED lower level warning light package. Includes (8) 600 LED light heads (6) Red/Blue (2) Red /White with clear lenses and (2) red 500 LED light heads with clear lenses and chrome flanges. Locate side facing lights: [#LOC].	$2,939
5550-0244	Whelen M6 Super LED lower level warning light package. Includes (8) split red/clear M6D LED light heads and (2) red TIR3 LED light heads. Locate side facing lights: [#LOC].	$3,066
5550-0245	Whelen Super LED lower level warning light package. Includes (4) red 600 LED light heads, (4) blue 600 LED light heads, (1) red 500 LED light head and (1) blue 500 LED light head all with clear lenses. Lights to be driver side blue, officer side red; see specification. Locate side facing lights: [#LOC].	$2,600
5550-0248	Federal Signal QuadraFlare LED lower level warning light package with clear lenses. Includes (8) QL64XFC-R LED light heads with bezels and (2) IMPAXX LED model IPX300-4 light heads. Locate side facing lights: [#LOC].	$2,063
5550-0249	Whelen M6 Super LED lower level warning light package. Includes (5) red M6R LED light heads, (2) M6J split red/blue LED light heads, (1) blue M6B LED light head (officer front) and (2) red M2R LED light heads. Locate side facing lights: [#LOC].	$3,281
5550-0251	Whelen 600 series Super LED lower level warning light package. Includes (10) LED light heads w/chrome flanges. (5) Red, (5) blue alternating. Locate side facing lights: [#LOC].	$2,752
5550-0252	Whelen 600 series Super LED lower level warning light package. Includes (8) red LED light heads with clear lenses and (2) split red/blue LED light heads with clear lenses. Locate side facing lights: [#LOC].	$2,799
5600-0002	Warning light Whelen 600 series strobe (PR) [#COL]. Requires power pack or option with spare power pack outlets. Includes weatherproof connectors. Requires engineering approval for NFPA applications. Location(s): [#LOC]	$408
5600-0005	Warning light Whelen 700 series strobe (PR) [#COL]. Requires power pack or option with spare power pack outlets. Includes weatherproof connectors. Requires engineering approval for NFPA applications. Location(s): [#LOC]	$405
5600-0008	Warning light Whelen 900 series strobe (PR) [#COL]. Requires power pack or option with spare power pack outlets. Includes weatherproof connectors. Requires engineering approval for NFPA applications. Location(s): [#LOC]	$408
5600-0011	Whelen power supply model UPS64LX 4Place 75Watt strobe.	$527
5600-0012	Whelen power supply model ISP148 eight (8) place 140watt strobe.	$1,238
5600-0013	Whelen power supply model ISP188 eight (8) place 180watt strobe.	$1,324
5600-0017	Warning light Whelen 500 series LED (PR) red. Surface mounted with weatherproof connector. Location: [#LOC]	$401
5600-0020	Warning light Whelen 600 series LED (PR) amber. Location: [#LOC] Surface mounted with weatherproof connector. Requires engineering approval for NFPA applications.	$715
5600-0021	Warning light Whelen 600 series LED (PR) red. Surface mounted with weatherproof connector. Location: [#LOC]	$715
5600-0022	Warning light Whelen 700 series LED (PR) red. Surface mounted with weatherproof connector. Location: [#LOC]	$625
5600-0023	Warning light Whelen 900 series LED (PR) amber. Location: [#LOC] Surface mounted with weatherproof connector. Requires engineering approval for NFPA applications.	$1,294
5600-0024	Warning light Whelen 900 series LED (PR) red. Surface mounted with weatherproof connector. Location: [#LOC]	$1,294
5600-0025	Warning light Whelen 600 series halogen (PR) [#COL]. Includes weatherproof connectors. Requires engineering approval for NFPA applications. Location(s): [#LOC]	$330
5600-0027	Warning light Whelen 900 series halogen (PR) [#COL]. Includes weatherproof connectors. Requires engineering approval for NFPA applications. Location(s): [#LOC]	$330
5600-0029	Code3 Model 550 rotating (PR) with [#COL] domes. Location: [#LOC].	$353
5600-0030	Code3 Model #550/#41. Includes (2) #550's with red domes and (2) #41 lights with [#COL] lenses. Total four (4) lights at rear upper. Location of Model 550 lights: [#LOC].	$910

5600-0031	Code 3 / PSE Oscilaser warning light (PR). Lights are to be located on front of cab in the inboard position of the quad bezel.	$549
5600-0033	Whelen beacon with halogen rotator and 700 series strobe (PR) Model B6R with red domes and [#COL] strobes. Location [#LOC]. Requires power pack.	$783
5600-0034	Federal model SY12FS Sentry (PR) with [#COL] domes. Location: [#LOC].	$354
5600-0036	Federal model IVP100 Vector pod (PR) with [#COL] domes. Location: [#LOC].	$422
5600-0037	Hazard (door ajar) light Federal Signal model FB3 Comp R. Location: [#LOC].	$219
5600-0038	Federal Model IVP200F Vector pod warning light (PR) with [#COL] filters. Location: [#LOC].	$459
5600-0040	Whelen beacon Model RB6PAP (PR) with amber lenses. Located one (1) each side at rear. Location: [#LOC]	$432
5600-0041	Warning light Federal Signal GS2 strobe (PR) [#COL]. Requires power pack or option w/spare power pack outlets. Requires engineering approval for NFPA applications. Location(s): [#LOC].	$394
5600-0046	Warning light Federal Signal GH1F halogen (PR) [#COL]. Location(s): [#LOC]	$295
5600-0048	Warning light Federal Signal GL5 LED (PR) red. Location: [#LOC]	$584
5600-0049	Warning light Federal Signal GS5 strobe (PR) [#COL]. Requires power pack or option w/spare power pack outlets. Requires engineering approval for NFPA applications. Location(s): [#LOC]	$361
5600-0051	Warning light Federal Signal GL5 LED (PR) amber. Location: [#LOC].	$604
5600-0052	Federal Signal SPS4-NFPA (4) place 90 watt strobe power supply. Required when using Federal Signal strobes.	$523
5600-0053	Federal Signal SPS8-NFPA (8) place 192 watt strobe power supply. Required when using Federal Signal strobes.	$932
5600-0061	Mars 888 pedestal mounted traffic clearing light on front of cab above grille.	$867
5600-0062	Warning light Roto Ray 200 with red lenses. N/A on commercial chassis. Locate on front of cab center above grille.	$1,496
5600-0063	Warning light Roto Ray 200 with (2) red and (1) clear lenses. N/A on commercial chassis. Locate on front of cab center above grille.	$1,496
5600-0067	Federal Signal Model #100 beacon (PR) with [#COL] domes. Location: [#LOC].	$452
5600-0074	Opticom Emitter 3M #792H. Emitter and control only. Wire through parking brake. Location: [#LOC].	$2,770
5600-0075	Opticom Emitter 3M #592 Chrome. Emitter and dash control only. Wire through parking brake. Location: [#LOC].	$3,292
5600-0078	Whelen Super LED beacon (PR) model L31H with [#COL] domes. Location [#LOC].	$1,711
5600-0079	Whelen beacon with halogen rotator and 700 series LED (PR) Model B6TM with red domes and [#COL] LEDs. Location [#LOC].	$1,295
5600-0080	Whelen beacon with LED upper beacon and 700 series Super LED (PR) model B6LED with red domes and [#COL] LEDs. Location: [#LOC].	$2,622
5600-0081	Code 3 / PSE Oscilaser warning light (PR). Lights are to be located on front of cab above quad bezels.	$576
5600-0083	Warning light Code3 LXEX1F-R LED (PR). Surfaced mounted with clear lens. Location: [#LOC]	$652
5600-0085	Tomar strobe preemption emitter with chrome housing. Includes pedistal mount and switch on dash. Wire through parking brake. Location: [#LOC].	$1,352
5600-0086	Whelen beacon model RB6T (PR) with [#COL] domes. Location: [#LOC].	$366
5600-0087	Warning light Code 3 65BZA LED (PR) amber. Surface mounted with bezel. Location: [#LOC]	$525
5600-0088	Warning light Code 3 65BZR LED (PR) Red. Surface mounted with bezel. Location: [#LOC]	$525
5600-0089	Warning Light Code3 model #65BZRW split red/clear LED with chrome bezel (PR). Location: [#LOC].	$690
5600-0090	Warning light Federal Signal QuadraFlare QL64XF LED (PR) red. Surface mounted with bezel. Location: [#LOC].	$555
5600-0092	Opticom Emitter 3M #792HF. Emitter with filter and control only. Wire through parking brake. Location: [#LOC].	$2,770
5600-0093	Whelen beacon with halogen rotator and 700 series scene (PR) Model B6TH*Z1P. Dome color: [#COL]. Location [#LOC].	$1,092
5600-0094	Warning light Federal Signal QL64XF LED (PR) amber. Surface mounted with bezel. Location: [#LOC].	$555
5600-0098	Warning light Whelen 600 series Super LED (PR) amber. Location: [#LOC].	$552
5600-0099	Warning light Whelen 600 series Super LED (PR) red. Location: [#LOC].	$552
5600-0100	Warning light Whelen 600 series Super LED (PR) blue with clear lens. Location: [#LOC].	$552
5600-0101	Whelen beacon with halogen rotator and 700 series LED (PR) Model B6TM with amber dome on driver side, red dome officer side and [#COL] LEDs. Location [#LOC].	$1,295
5600-0105	Hazard (door ajar) light 2" LED. Location: [#LOC].	$32
5600-0106	Warning light Roto Ray LED with (2) red and (1) clear lights. Locate on front of cab center above grille.	$2,543
5600-0107	Warning light Roto-Ray LED with red lenses. Locate on front of cab center above grille.	$2,543
5600-0111	Warning light Whelen 600 series Super LED (PR) white with clear lens. Location: [#LOC]	$626
5600-0112	Warning light Whelen 600 series LED (PR) blue. Surface mounted. Location: [#LOC]	$821

5600-0117	Whelen Ultra Freedom Micro Edge LED (PR) model MCFLED25 clear lens with red LEDs. Location [#LOC].	$1,779
5600-0118	Warning light Whelen 500 series TIR6 Super LED (PR) red. Surface mounted 5TSMAC bezel with weatherproof connector. Location: [#LOC].	$467
5600-0124	Warning light Code 3 LXEX1F-R LED (PR) red. Surface mounted with bezel. Location: [#LOC]	$644
5600-0125	Code3 model 780 LED flasher. Flasher will control lower level warning lights ipo multiplexing	$1,508
5600-0128	Warning light Whelen 600 series split Super LED (PR) red/amber. Location: [#LOC]	$717
5600-0129	Warning light Whelen 600 series split Super LED (PR) red/clear. Location: [#LOC].	$771
5600-0130	Whelen model UFM8 LED flasher (PR). Flashers will control lower level warning lights ipo internal flashers. Locate (1) in cab and (1) in body.	$1,019
5600-0131	Light Whelen model PSR00FRR LED (PR) red. Location: [#LOC].	$352
5600-0132	Warning light Federal Signal QL64XF LED (PR). (1) red and (1) green. Location: Red driver and green officer in front quad inboard of NFPA warning light	$741
5600-0133	Warning light Whelen 900 series Super LED model 90RR5FRR (PR) red. Location: [#LOC].	$1,088
5600-0134	Warning light Whelen 600 series LED red/clear. Surface mounted with weatherproof connector(PR). Location: [#LOC]	$719
5600-0136	Federal MicroEscape LED beacon (PR) with [#COL] lenses. Location: [#LOC]. Requires additional upper level warning or Signal Master.	$1,858
5600-0137	Warning light Whelen 700 series Super LED (PR) red/clear. Surface mounted with weatherproof connector. Location: [#LOC]	$726
5600-0138	Warning light Whelen LIN3 series Super LED (PR) red with clear lens. Surface mounted RFLANGCD bezel with weatherproof connector. Location: [#LOC]	$348
5600-0139	Whelen beacon with LED upper beacon and 700 series Super LED (PR) model B6LED with red LEDs/clear domes and [#COL] LEDs/clear lenses. Location: [#LOC].	$2,622
5600-0140	Warning light circuit wiring through chassis reverse. All warning lights.	$70
5600-0143	Warning lights Whelen 600 series Super LED (PR) red w/clear lens. Location: [#LOC].	$552
5600-0144	Warning light Whelen 500 series TIR6 Super LED (PR) blue. Surface mounted 5TSMAC bezel with weatherproof connector. Location: [#LOC]	$467
5600-0147	Warning light Whelen 600 series LED (PR). Red driver, blue officer surface mounted with weatherproof connector. Location: [#LOC]	$768
5600-0152	Warning light Whelen 500 series LED (PR) green. Includes switch on pump panel labeled "Ready for Water" Location: (1) centered between grille and windshield on slope, (1) driver side (inside of beavertail if so equipped) up high below hosebed opposite officer discharge.	$713
5600-0153	Warning light Whelen 600 series split Super LED (PR) red/blue driver, red/amber officer. Location: [#LOC].	$717
5600-0154	Warning light Whelen 600 series Super LED (PR). Red driver, blue officer surface mounted with weatherproof connector. Location: [#LOC].	$552
5600-0156	Warning light Federal Signal QL64XF LED (PR) green. Surface mounted with bezel. Location: [#LOC].	$612
5600-0157	Federal Model SY12FS Sentry with green dome. Includes switch on driver overhead. Location: pole mounted center rear cab roof.	$359
5600-0160	Warning light Federal Signal QL97XF LED (PR) red. Surface mounted with bezel (if applicable). Location: [#LOC].	$800
5600-0161	Warning light Federal Signal QL97XF LED (PR) amber. Surface mounted with bezel (if applicable). Location: [#LOC]	$800
5600-0162	Warning light Federal Signal QL64XF LED (PR) blue. Surface mounted with bezel. Location: [#LOC].	$555
5600-0165	Warning light Whelen 500 series Super Linear LED (PR) green. Location: [#LOC].	$493
5600-0173	Federal MicroEscape NFPA compliant LED beacons (PR) clear lenses with [#COL] LED reflectors. Location: [#LOC].	$1,387
5600-0175	Warning light Whelen 700 series Super LED (PR) red. Location: [#LOC].	$552
5600-0176	Mars 888 pedestal mounted traffic clearing lights with clear lenses located one each side of cab above outer quad bezel.	$1,732
5600-0177	Whelen model UFM8 LED flasher (3). Flashers will control warning lights ipo internal flashers. Locate (1) in cab and (2) in body.	$1,529
5600-0180	(Obsolete from vendor)Whelen beacon with LED upper beacon and 700 series Super LED (PR) Model B6LED with red domes and split red/amber LEDs. Location [#LOC].	$2,689
5600-0181	Warning light Federal Signal Model 360501 LED w/ bezel (PR). Surfaced mounted with blue driver and red officer lenses. Location: [#LOC].	$513
5600-0182	Whelen beacon with LED upper beacon and 700 series Super LED (PR) Model B6LED with amber domes and [#COL] LEDs. Location [#LOC]	$2,622
5600-0183	Warning light Whelen 600 series Super LED (PR). blue driver, green officer surface mounted with weatherproof connector. Location: [#LOC].	$642
5600-0184	Warning light Federal Signal QL64XF LED (PR). (1) red driver, (1) blue officer. Surface mounted with bezel. Location: [#LOC]	$555

5600-0185	Federal Model IVP100 Vector pod (PR) located at the rear cab corners. Driver side to be amber with switch on driver's switch panel and automatically turn off when warning lts are on. Officer side to be blue with switch on driver's switch panel.	$706
5600-0187	Warning light Federal Signal QL97XF LED (PR). (1) red driver, (1) blue officer. Surface mounted with bezel (if applicable). Location: [#LOC].	$800
5600-0189	Federal Intelli model 650205 LED flasher (PR). Flashers will control lower level warning lights ipo internal flashers. Locate (1) in cab and (1) in body.	$808
5600-0190	Warning light Whelen 600 series Super LED (PR). Blue driver, amber officer surface mounted with weatherproof connector. Location: [#LOC].	$552
5600-0191	Whelen beacon with LED upper beacon and 700 series Super LED (PR) Model B6LED with amber driver and red officer domes and [#COL] LEDs. Location [#LOC].	$2,622
5600-0195	Code3 model XP9501NFPA1 (PR) red LED with clear domes. Location: [#LOC].	$1,882
5600-0196	Fed QuadraFlare QL64SC-RC Red/White split color LED lights in ptd smooth plt alum box above the grille. Red on top on left side and bottom on right side to simulate "X" pattern. Wired to lower zone lighting and switched off with parking brake. Includes ext flasher.	$1,480
5600-0197	Warning light Whelen 600 series Super LED (PR). red driver, green officer surface mounted with weatherproof connector. Location: [#LOC].	$642
5600-0198	Whelen PE215 emitter. Emitter and control only. Wire through parking brake. Location: [#LOC].	$796
5600-0199	Whelen beacon with LED upper beacon and 700 series Super LED (PR) Model B6LED with red driver and blue officer domes and [#COL] LEDs. Location [#LOC].	$2,622
5600-0200	Whelen beacon with LED upper beacon and 700 series Super LED (PR) Model B6LED with red driver and amber officer domes and [#COL] LEDs. Location [#LOC].	$2,622
5600-0202	Warning light Weldon Diamondback V46W-C00R LED (PR) red w/ clear lenses. Includes diamond plate mounting box. Location: [#LOC].	$845
5600-0221	Warning light Whelen LIN3 series Super LED (4) red with clear lens. Surface mounted RFLANGCD bezel with weatherproof connector. Location: 2 each side of ford logo on the front grill above and below center brush gaurd bar.	$694
5600-0223	Warning light Code 3 378ABZ LED (PR) amber. Surface mounted with bezel. Location: [#LOC].	$626
5600-0226	Warning light Federal Signal Model 360501-04 LED w/ bezel (PR). Surfaced mounted with red lens. Location: [#LOC].	$366
5600-0227	Warning light Whelen 600 series Super LED (PR). Red driver, blue officer surface mounted with clear lenses and weatherproof connector. Location: [#LOC].	$552
5600-0228	Warning light Whelen 900 series Super LED (PR) with clear lenses. (1) model 90RR5FCR red driver and (1) model 90BB5FCR blue officer. Each light shall have a clear lense w/ colored LEDs. Location: [#LOC].	$1,088
5600-0229	Warning light Whelen 500 series TIR6 Super LED (PR) red driver, blue officer with clear lenses. Surface mounted 5TSMAC bezel with weatherproof connector. Location: [#LOC]	$467
5600-0230	Warning light Whelen 600 series Super LED (PR) blue with blue lens. Location: [#LOC].	$552
5600-0234	Warning light Whelen Dominator series LED model D844000 red driver/blue officer with clear lenses. Location: [#LOC]. Wire through lower level warning.	$833
5600-0236	Whelen beacon with LED upper beacon and 700 series Super LED (PR) model B6LED with blue driver and red officer domes and [#COL] LEDs. Location: [#LOC].	$2,622
5600-0237	Warning light Whelen M7RC Linear Super LED (PR) red with clear lense. Location: [#LOC].	$614
5600-0238	Warning light Whelen 600 series Super LED (PR). (1) red steady burn front driver side below windshield and (1) flashing amber driver side above tail lights to meet California DOT requirements.	$552
5600-0240	Warning light Whelen M4R LED (4) red. Surface mounted with weatherproof connector. Flashing lights wired through door ajar. Location: One on each of the interior cab doors (outboard position).	$1,096
5600-0241	Warning light Whelen M6R series Linear Super LED (PR) red. Location: [#LOC].	$632
5600-0242	Warning light Whelen M6 series Linear Super LED (PR) split red/amber with clear lens. Location: [#LOC].	$693
5600-0243	Warning light Whelen 500 series split TIR6 Super LED (PR) red/amber. Surface mounted 5TSMAC bezel with weatherproof connector. Location: [#LOC].	$535
5600-0245	Warning light Federal Signal QL64XF LED (PR) red with clear lens. Surface mounted with bezel. Location: [#LOC]	$555
5600-0248	Warning light Whelen M9 series Super LED (PR) red driver, blue officer with clear lenses. Location: [#LOC].	$1,253
5600-0249	Warning light Whelen M6 series Linear Super LED (PR) red driver, blue officer with clear lenses. Location: [#LOC].	$632
5600-0250	Whelen beacon with LED upper beacon and 700 series Super LED (PR) Model B6LED with red LED/clear dome driver and blue LED/clear dome officer and [#COL] LEDs/clear lenses. Location: [#LOC].	$2,622
5600-0251	3m Opticom GPS vehicle system kit. Includes antenna, radio and control unit. Wired through park brake.	$7,631
5600-0252	Hazard (door ajar) light Federal Signal Fire Bolt strobe. Location: [#LOC].	$220

5600-0253	Warning light Federal Signal QL97XF LED (PR). (1) red driver, (1) amber officer. Surface mounted with bezel (if applicable). Location: [#LOC]	$800
5600-0254	Warning light Federal Signal QL97XF LED (PR). (1) amber driver, (1) red officer. Surface mounted with bezel (if applicable). Location: [#LOC]	$800
5600-0255	Warning light Whelen 900 series Super LED driver side red model (90RR5FRR) / officer side amber (90AA5FAR). Location: [#LOC]	$1,088
5600-0256	Warning light Whelen M-Series Super LED model M9J (PR) red/blue. Surface mounted with weatherproof connector. Location: [#LOC].	$1,253
5600-0257	Warning light Whelen M6 series Linear Super LED (PR) split red/blue with clear lens. Location: [#LOC].	$693
5600-0258	Warning light Whelen M9RC series Super LED (PR) red with clear lens. Location: [#LOC].	$1,063
5600-0259	Warning light Whelen M6BC series Linear Super LED (PR) blue with clear lens. Location: [#LOC].	$632
5600-0264	Whelen beacon with LED upper beacon and 700 series Super LED (PR) Model B6LED with blue LED/clear dome driver and red LED/clear dome officer and [#COL] LEDs/clear lenses. Location: [#LOC].	$2,622
5600-0267	Warning light Whelen Dominator series LED with red driver/blue officer with clear lenses. Location: [#LOC]. Wire through lower level warning.	$846
5600-0268	Mars 888 pedestal mounted traffic clearing light located one each side of cab outboard above the outer quad bezel on contoured pedestal bracket. Lens color(s): driver red, officer clear.	$2,065
5600-0269	Whelen Super LED beacon (PR) model L31H with red driver, amber officer LED and clear domes. Location [#LOC].	$1,711
5600-0272	Hazard (door ajar) light Federal Signal 2.5" LED model 607120-04. Location: [#LOC].	$53
5600-0273	Warning light Whelen 900 series Super LED (PR). (1) model 90RR5FCR red driver and (1) model 90BB5FCR blue officer. Each light shall have a clear lense w/ colored LEDs. Location: side facing (1) each side upper front body panels and side facing (1) each side upper rear body panels.	$1,088
5600-0274	Warning light Whelen 900 series Super LED (PR). (1) model 90RR5FCR red driver and (1) model 90BB5FCR blue officer. Each light shall have a clear lense w/ colored LEDs. Location: Rear facing up high on the rear one above each other.	$1,088
5600-0275	Warning light Whelen M6AC series Linear Super LED (PR) amber with clear lens. Location: [#LOC].	$632
5600-0276	Whelen Ultra Freedom Micro Edge LED (PR) model MCFLED clear lens with amber driver / red officer LEDs. Location [#LOC].	$1,779
5600-0277	Warning light Whelen M6C series Linear Super LED (PR) white. Location: [#LOC].	$632
5600-0279	Hazard (door ajar) light Whelen model L53RP red. Location: [#LOC].	$219
5600-0284	Whelen Super LED beacon (PR) model L31H with blue driver, red officer LED and clear domes. Location [#LOC].	$1,711
5600-0285	Warning light Roto-Ray LED with (1) red, (1) blue and (1) clear lenses. Locate on front of cab center above grille.	$2,543
5600-0286	Warning light Whelen M6RC series Super LED (PR) red with clear lens. Location: [#LOC].	$605
5600-0287	Warning light Whelen Dominator Plus model DP880000 with (8) red LINZ6 LEDs. Location: [#LOC]. Wire through lower level warning.	$1,392
5600-0290	Warning light Whelen 600 series Super LED (PR) red with diamond plate mounting boxes. Location: [#LOC].	$711
5600-0291	Warning light Roto Ray LED with (1) red, (1) green and (1) white lights. Locate on front of cab center above grille.	$2,543
5600-0292	Warning light Whelen 900 series Super LED model 90RR5FRC (PR) red w/ clear lens. Location: [#LOC].	$1,088
5600-0294	Warning light Federal Signal IMPAXX model IPX600-R red LED w/ bezel (PR). Surfaced mounted with clear lens. Location: [#LOC].	$428
5600-0297	Warning light Whelen Dominator series LED model D860020 red/white. Includes R/W/R/R/R/R/W/R LEDs with clear lenses. Location: [#LOC]. Wire through lower level warning.	$836
5600-0298	Warning light Power Arc model M90FK-W LED (PR). Color: White. Location: [#LOC].	$915
5600-0299	Warning light Federal Signal IMPAXX LED model IPX302-4 w/ bezel (PR). Surfaced mounted with red lens. Location: [#LOC].	$293
5600-0301	Warning light Whelen M2 Super LED warning lights. Includes (2) red M2R LED light heads, (red LEDs, red lens) w/chrome flanges (if applicable). Location: [#LOC].	$503
5600-0302	Warning light Whelen M2 Super LED warning lights. Includes (2) red M2R LED light heads, (red LEDs, clear lens) w/chrome flanges (if applicable). Location: [#LOC].	$503
5600-0303	Whelen Super LED beacon (PR) model L31H with [#COL] domes. Location [#LOC].	$1,711
5600-0305	Warning light Whelen M6 series Linear Super LED (PR) amber driver, red officer with clear lenses. Location: [#LOC].	$632
5600-0306	Opticom Emitter 3M 794H. LED emitter and control only. Location and activation: [#LOC].	$2,132

5600-0307	Warning light Whelen 600 series LED (PR) with clear lens. Red driver, blue officer surface mounted with weatherproof connector. Location: [#LOC]	$768
5600-0310	Warning light Whelen M6 series Linear Super LED (PR) split red/clear with clear lens. Location: [#LOC].	$693
5600-0312	Light Whelen model PSA00FAR LED (PR) amber. Location: [#LOC].	$352
5600-0313	Warning light Whelen 900 series Super LED with clear lens model 90BB5FCR (PR) blue. Location: [#LOC].	$1,088
5600-0314	Federal Signal Vision LED rotating beacons model VSLR-IPX-R1R21 with rear facing IPX6 red LED warning light (Requires additional rear facing warning lights for NFPA compliance). Location: [#LOC].	$2,141
5600-0315	Whelen Micro Liberty LED (PR) (1) driver Model MCSLED2R clear lense with red LEDs and (1) officer MCSLED2B clear lense with blue LEDs. Location: [#LOC].	$1,498
5600-0316	Warning light Whelen M4AC Super-LED lights (PR) amber with clear lenses. Location: [#LOC].	$811
5600-0317	Whelen Super LED beacon (PR) model L31H with red driver, blue officer LED and clear domes. Location: [#LOC].	$1,711
5600-0321	Mars 888 pedestal mounted traffic clearing light located one each side of cab outboard above the outer quad bezel on contoured pedestal brkt. Lens color: clear.	$2,065
5600-0322	Warning light Whelen M7D series Linear Super LED (PR) split red/clear with clear lens. Location: [#LOC].	$701
5600-0327	Warning light Whelen Dominator series LED model D880000 red with clear lenses. Location: [#LOC]. Wire through lower level warning.	$833
5600-0328	Warning light Whelen M7 series Linear Super LED (PR) white light with clear lens. Location: [#LOC].	$614
5600-0330	Warning light Federal Signal IMPAXX model IPX602-R red LED w/ bezel (PR). Surfaced mounted with red lens. Location: [#LOC].	$428
5600-0331	Federal Signal Vision LED rotating beacons model VSLR-R with red LED warning light(s) and red lenses (Requires additional rear facing warning lights for NFPA compliance). Location: [#LOC].	$1,600
5600-0332	Mars 888 pedestal mounted traffic clearing light located (1) each side of cab outboard above the outer quad bezel on contoured pedestal bracket. Driver side red, officer side clear.	$2,065
5600-0333	Warning light Whelen M9 series Super LED (PR) red driver, amber officer. Location: [#LOC].	$1,253
5600-0336	Warning light Roto Ray LED with (1) red, (1) amber and (1) clear lights. Locate on front of cab center above grille.	$2,543
5600-0338	Warning light Whelen M9 series Super LED (PR) red officer, amber driver. Location: [#LOC].	$1,253
5600-0339	Warning light Whelen 600 series Super LED (PR). Red officer, blue driver surface mounted with weatherproof connector. Location: [#LOC].	$552
5600-0340	Warning light Whelen M6 series Linear Super LED (PR) red driver, blue officer. Location: [#LOC].	$632
5600-0341	Warning light Whelen 600 series split Super LED (PR) red/blue with clear lens. Location: [#LOC].	$717
5600-0342	Whelen beacon with LED upper beacon and 700 series Super LED (PR) Model B6LED with blue driver and amber officer domes and [#COL] LEDs. Location [#LOC].	$2,622
5600-0345	Warning light Federal Signal IMPAXX LED model IPX300-4 w/ bezel (PR). Surfaced mounted red LEDs with clear lens. Location: [#LOC].	$293
5600-0347	Warning light Whelen 900 series Super LED blue driver, amber officer. Location: [#LOC].	$1,088
5600-0350	Hazard (door ajar) light Whelen Vertex red LED model VTX609R w/chrome bezel. Location: [#LOC].	$236
6000	**Aerial**	
6100-0000	Ladder HM100 with waterway to 80 ft. Includes partial fly section K-bracing, left side console with cover, split steps at tip and jack leg flood lights.	$212,937
6100-0001	Ladder HM100 without waterway. Includes partial fly section K-bracing, left side console with cover, split steps at tip and jack leg flood lights.	$186,917
6100-0002	Ladder 110 with waterway to 87'. Includes partial fly section K-bracing, left side console with cover, split steps at tip and jack leg flood lights.	$213,003
6100-0003	Ladder 110 without waterway. Includes partial fly section K-bracing, left side console with cover, split steps at tip and jack leg flood lights.	$186,985
6100-0005	Ladder HP75 with waterway. Includes left side console with cover, split steps at tip and jack leg flood lights.	$173,250
6100-0006	Ladder HP100. Includes pinned waterway, left side console with cover, split steps at tip and jack leg flood lights.	$266,742
6100-0007	Ladder CR100 with waterway. Includes left side console with cover, split steps at tip and jack leg flood lights.	$262,649
6100-0008	Platform HP95 Mid-Mount. Includes driver side roll top console, level assist and jack leg flood lights.	$357,736
6100-0009	Ladder HP100 SideStacker. Includes pinned waterway, left side console with cover, turntable mansaver bars, split steps at tip and jack leg flood lights.	$267,598
6100-0010	Ladder CR100 SideStacker with waterway. Includes left side console with cover, turntable mansaver bars, split steps at tip and jack leg flood lights.	$263,505

6100-0018	Platform HP100 with SideStacker T/T. Includes left side roll top console, turntable mansaver bars and jack leg flood lights.	$340,179
6100-0019	Platform HP100 with full turntable. Includes left side roll top console, turntable mansaver bars and jack leg flood lights.	$340,179
6100-0020	Ladder HM100 with waterway to tip. Includes full fly section K-bracing, left side console with cover, split steps at tip and jack leg flood lights.	$216,219
6100-0025	Aerial chassis components for 95-Platform/CR100/110H/135. Requires customer supplied aerial and aerial overhaul/upgrade package.	$135,440
6100-0026	Raise aerial turntable pedestal and boom support 1" (Required on 260" wheelbase HP100 Platform and 250" wheel base long cab HP100 NPNT Platform).	$2,567
6100-0027	Ladder HP78 500 lb tip load with waterway. Includes left side console with cover, split steps at tip and jack leg flood lights.	$175,360
6100-0028	Ladder HP78 750 lb tip load with waterway. Includes left side console with cover, split steps at tip and jack leg flood lights.	$175,360
6100-0030	Lower aerial turntable pedistal and boom support 6" (HM100/110). Top of turntable support to top of torque box to be 36.25".	$778
6100-0031	Ladder 110' SideStacker with waterway to 87'. Includes partial fly section K-bracing, left side console with cover, turntable mansaver bars, split steps at tip and jack leg flood lights.	$213,860
6100-0032	Lower aerial turntable pedestal and boom support 3" (HP100 ladder). Top of turntable support to top of torque box to be 35.813".	$778
6100-0033	Ladder CR137 with waterway to 110'. Includes left side console with cover, split steps at tip and jack leg flood lights.	$272,377
6100-0034	Ladder CR137 SideStacker with waterway to 110'. Includes left side console with cover, turntable mansaver bars, split steps at tip and jack leg flood lights.	$273,234
6100-0035	Lower aerial turntable pedistal and boom support (CR100/95-Platform). Top of turntable support to top of torque box to be 32.875" (for use with a 58" high body).	$778
6100-0036	Ladder HM100 with waterway to tip for SideStacker body. Includes full fly section K-bracing, left side console with cover, split steps at tip and jack leg flood lights.	$217,077
6100-0037	Ladder HP100. For use with center rear staircase body. Includes pinned waterway, rear handrail extension (PR) on turntable, left side console with cover, split steps at tip and jack leg flood lights.	$267,012
6100-0038	Lower aerial turntable pedestal and boom support 3" (HM100/110). Top of turntable support to top of torque box to be 39.25".	$778
6100-0039	Lower aerial turntable pedestal and boom support 4". For use with 65" high body.	$487
6100-0040	Platform HP100 (2000 GPM capacity) with SideStacker T/T. Includes perimeter flow w/way pipe, 5" swivel, 5" lower w/way piping, left side roll top console, turntable mansaver bars and jack leg flood lights.	$341,972
6100-0041	Raise aerial turntable pedistal and boom support 2". Top of turntable support to top of torque box to be 36". (Required on Industrial HP100 Platform 750 gallon or greater tank).	$2,619
6100-0042	Ladder LTH100 without waterway. Includes left side console with cover, adjustable height turntable handrails, split steps at tip and jack leg flood lights.	$185,915
6100-0043	Lower aerial turntable pedistal and boom support 2" (HP100 Platform). Top of turntable support to top of torque box to be 32".	$778
6150-0000	Cold weather package for aerial hydraulic system.	$2,414
6150-0001	Aerial hydraulic filter isolation kit.	$340
6150-0002	Aerial hydraulic reservoir to be located in lower L1 compt.	$888
6150-0003	Gauge aerial hydraulic oil level. Electronic display to be located [#LOC].	$524
6150-0004	Extended length outrigger foot (PR). Required with 33k rear axle.	$320
6150-0005	Aerial hydraulic oil reservoir to be stainless steel IPOS. Includes flange type hyd fittings. Not for use in southern climates.	$1,571
6150-0006	Gauge aerial hydraulic oil level. Electronic display to be located on upper rear surface of turntable control console.	$729
6150-0007	Aerial hydraulic reservoir to be located ahead of ladder tunnel on "H" style bracket.	$888
6150-0008	Integral outrigger pad extensions (4). 15" x 20" x .5" steel plate welded to std jack foot plates.	$394
6150-0009	Cold weather package for shared aerial hydraulic system.	$246
6150-0011	Aerial hydraulic sight level gauge IATS. To be located on forward face of aerial reservoir viewable from a hinged door facing outboard behind compartment plate work.	$563
6150-0012	Extended length outrigger foot (4). Required with >54k rear axle on HP100 Platform.	$131
6300-0001	Monitor Elkhart electric 1000 GPM for ladder. Includes tip and base controls.	$10,400
6300-0002	Monitor Akron electric 1000 GPM for ladder. Includes tip and base controls.	$10,304
6300-0004	Monitor Elkhart electric 1250GPM. Includes tip controls, base controls and a butterfly valve.	$10,304
6300-0007	Monitor Akron electric 1250GPM for platform. Includes tip controls, base controls and butterfly valve.	$10,449

6300-0009	Monitor Elkhart dual for platform. Rated at 1250 GPM on the 92 Pltfrm and 1500 GPM on the HP95MM and HP100 Pltfrm. Includes (1) electric and (1) manual monitor, (2) butterfly valves and tip/base controls for the electric monitor. Monitor sweep is 67.5 degrees outward and 22.5 degrees inward.	$15,644
6300-0010	Monitor Akron dual for platform. Rated at 1250 GPM on the 92 Pltfrm and 1500 GPM on the HP95MM and HP100 Pltfrm. Includes (1) electric and (1) manual monitor, (2) butterfly valves and tip/base controls for the electric monitor. Monitor sweep is 67.5 degrees outward and 22.5 degrees inward.	$16,000
6300-0014	Monitor TFT electric 1250GPM with powder coated silver finish. Includes tip controls, base controls and a butterfly valve.	$12,490
6300-0015	Monitor TFT dual for platform with powder coated silver finish. Rated at 1250 GPM on the 92 Pltfrm and 1500 GPM on the HP95MM and HP100 Pltfrm. Includes (1) electric and (1) manual monitor, (2) butterfly valves and tip/base controls for the electric monitor. Monitor sweep is 67.5 degrees outward and 22.5 degrees inward.	$16,691
6300-0016	Monitor TFT electric 1000 GPM for ladder with a powder coated silver finish. Includes tip and base controls.	$10,304
6300-0018	Monitor painted job color.	$376
6300-0020	Monitor Akron electric 1250GPM with SabreMaster nozzle. Includes tip controls, base controls and a butterfly valve.	$11,399
6300-0025	Monitor Elkhart Scorpion RF 1000GPM for ladder. Includes (1) handheld control, OEM transmitter with tip and base controls.	$13,176
6300-0029	Monitor painted two-tone (secondary) job color.	$376
6300-0030	Monitor Akron dual for platform. Rated at 1250 GPM on the 92 Pltfrm and 1500 GPM on the HP95MM and HP100 Pltfrm. Includes (1) electric with SabreMaster nozzle and (1) manual monitor, (2) butterfly valves and tip/base controls for the electric monitor. Monitor sweep is 67.5 degrees outward and 22.5 degrees inward.	$16,948
6300-0031	Monitor Akron 3578 electric 1000GPM for ladder. Includes 3499 stack tips, 3485 steam shaper and base controls.	$9,992
6300-0032	Monitor Akron electric 1000GPM with SabreMaster nozzle for ladder. Includes tip and base controls.	$11,370
6300-0033	Monitor Akron electric 1500GPM. Side sweep limited to 45 degrees. Up sweep limited to 30 degrees. Includes tip controls, base controls and a butterfly valve.	$10,991
6300-0034	Monitor Akron electric 1250GPM. Includes 3499 stack tips, 3485 steam shaper, tip controls, base controls and a butterfly valve.	$9,808
6300-0037	Monitor Akron 3578 electric 1000GPM for ladder. Includes base controls. Does not include nozzle or tips. For use with dept supplied 3499 stack tips and 3485 steam shaper (to be noted on the NFPA exceptions document).	$9,380
6300-0039	Semi-Automatic stow upgrade for TFT monitor on aerial ladder. Includes switches with indicatior lights at aerial turntable and pump panel control stations. Requires use of TFT control sys IPO OEM.	$679
6300-0040	Semi-automatic stow upgrade for Akron monitor on aerial. Includes switch with indicatior light at aerial control console(s).	$651
6300-0041	Monitor controls on pump operators panel. HP75/HP78 only.	$780
6300-0042	Monitor Akron electric 1500GPM for ladder. Includes tip and base controls. Side sweep limited to 45 degrees.	$10,794
6300-0043	Monitor TFT dual for platform. Rated at 1250 GPM on the 92 Pltfrm and 1500 GPM on the HP95MM and HP100 Pltfrm. Includes (1) electric and (1) manual monitor w/stacked tips, (2) butterfly valves and tip/base controls for the electric monitor. Monitor sweep is 67.5 degrees outward and 22.5 degrees inward.	$16,204
6300-0044	Monitor Akron electric 1000GPM StreamMaster XT with SabreMaster nozzle for ladder. Includes tip controls, base controls and stow feature.	$13,339
6300-0045	Monitor Elkhart dual for platform. Rated at 1250 GPM on the 92 Pltfrm and 1500 GPM on the HP95MM and HP100 Pltfrm. Includes (2) manual monitors, (2) butterfly valves. Monitor sweep is 67.5 degrees outward and 22.5 degrees inward.	$10,680
6300-0046	Wireless control for Akron monitor on aerial. Includes (1) transmitter.	$1,778
6300-0047	Monitor painted FLNA3225 red.	$376
6300-0048	Wireless control for TFT Monitor on aerial. Includes (1) transmitter and stainless steel mounting bracket.	$2,228
6300-0049	Monitor TFT electric 1000GPM for ladder with a powder coated silver finish. Includes stacked tips with tip and base controls.	$9,545
6300-0051	Monitor Elkhart dual for platform. Rated at 1250 GPM on the 92 Pltfrm and 1500 GPM on the HP95MM and HP100 Pltfrm. Includes (1) electric Scorpion EXM w/SM-1250 nozzle and (1) manual Scorpion monitor w/handwheels and ST-195 stacked tips, (2) butterfly valves and tip/base controls for the electric monitor. Monitor sweep is 67.5 degrees outward and 22.5 degrees inward.	$16,773

6300-0053	Monitor Akron electric 1250GPM for ladder. Includes tip and base controls. Side sweep limited to 45 degrees.	$10,304
6300-0054	Monitor TFT electric 1250GPM with powder coated silver finish. Includes tip controls, base controls and electric VUM with dual outlets (1) pointed out and (1) pointed in. VUM to be controlled from platform and turntable control consoles.	$12,695
6300-0055	Manual monitor painted silver from OEM. Electric monitor painted job color. Applies to dual monitor platforms only.	$284
6300-0056	Monitor Akron dual for platform. Rated at 2000 GPM on the HP100 Pltfrm. Includes (1) electric monitor with 5178 nozzle, (1) manual monitor with 5170 nozzle, (2) butterfly valves and tip/base controls for the electric monitor. Monitor sweep is 67.5 degrees outward and 22.5 degrees inward at 1500 flow. Greater flows have restricted sweep.	$16,869
6300-0057	Monitor TFT dual electric for platform with powder coated silver finish. 1250 GPM on the 92 Pltfrm and 1500 GPM on the HP95MM and HP100 Pltfrm. Includes (2) electric monitors, (2) manual VUM valves with (1)2.5" gated elbow outlet including 2.5" x 1.5" reducer w/cap, tip/base controls with monitor selector switch. Monitor sweep is 67.5 degrees outward and 22.5 degrees inward.	$20,533
6300-0058	Monitor TFT dual electric for platform with powder coated silver finish. Rated at 2000 GPM on HP100 Pltfrm. Includes (2) electric monitors, (2) VUM valves with (1)2.5" gated elbow outlet including 2.5" x 1.5" reducer w/cap, tip/base controls and monitor selector switch. Monitor sweep is 67.5 degrees outward and 22.5 degrees inward.	$20,533
6300-0059	Monitor Elkhart dual electric for platform. Rated at 2000 GPM on HP100 Pltfrm. Includes (2) electric monitors, (2) butterfly valves, tip/base controls and monitor selector switch. Monitor sweep is 67.5 degrees outward and 22.5 degrees inward.	$22,088
6300-0060	Monitor TFT electric 1250GPM with powder coated silver finish. Waterway rated at 1250gpm with M-ERP2000-NN nozzle. Includes tip controls, base controls and a butterfly valve.	$13,171
6300-0061	Monitor TFT electric 1250GPM for ladder. Includes shut off valve at tip (VUM) with reduced extension pipe at 2.75" long and 2.5" aux discharge valve . Side sweep set at 45 degrees. Includes tip and base controls. Monitor has a powder coated silver finish. Requires 4" waterway discharge and high flow W/W relief vlv.	$12,097
6300-0062	Monitor TFT electric 1500GPM for ladder with a powder coated silver finish. Side sweep set at 45 degrees. Requires 4" waterway discharge. Includes tip and base controls.	$10,304
6350-0000	Pinned waterway - upgrade. Waterway pins to section 2 or 3 on HP75 / HP78 and pins to section 3 or 4 on HM100 and CR100.	$6,654
6350-0001	Nozzle Guard.	$694
6350-0002	Elkhart 2.5" valve for platform. Valve to be located at the [#LOC].	$1,351
6350-0005	Rear 4" NST waterway inlet for rear mounted aerials. Includes chrome cap.	$917
6350-0006	2.5" Waterway Class 1 pressure gauge 30-0-600. Locate next to waterway inlet.	$177
6350-0007	3.5" Waterway Class 1 pressure gauge. Locate next to waterway inlet.	$200
6350-0008	Waterway shut-off valve. Mounted to allow waterway to be used as a discharge. (Available on 1000 GPM waterway only - N/A with Waterous pumps on 4-jack aerials.)	$1,222
6350-0009	Right side 4" NST waterway inlet for Mid-Mount Boom or Platform. Includes chrome cap.	$1,337
6350-0010	Flowminder with single readout and totalizer for the aerial waterway to be located at the aerial control station.	$2,236
6350-0012	Akron 2.5" valve for platform. Valve to be located at the [#LOC].	$1,490
6350-0014	2.5" chrome elbow with 2.5" x 1.5" reducer and 1.5" cap for platform / ladder discharge valve.	$246
6350-0015	Dual 4" NST waterway inlets for Mid-Mount Platform. Includes chrome caps.	$2,418
6350-0019	2.5" Waterway Class 1 pressure gauge 30-0-400. Locate next to waterway inlet.	$177
6350-0020	Dual read 2.5" Waterway Class 1 pressure gauge (30-0-600 psi/100-0-4140 KPA). Locate next to waterway Inlet.	$177
6350-0021	Dual read 3.5" Waterway Class 1 pressure gauge (30-0-600 psi/100-0-4140 KPA). Locate next to waterway Inlet.	$237
6350-0024	3.5" Waterway Class 1 pressure gauge 30-0-400. Locate next to waterway inlet.	$200
6350-0025	2.5" Noshok Waterway pressure gauge. Locate next to waterway inlet.	$189
6350-0026	2.5" Stainless steel RedHead 45 degree elbow with 2.5" x 1.5" chrome brass reducer and 1.5" chrome brass cap for platform discharge valve.	$403
6350-0027	Auxiliary waterway inlet isolation valve - 4" handwheel controlled Akron. Mounted to allow aux inlet to be connected while flowing waterway from on-board pump.Includes relief valve and bleeder outboard of 4" valve.	$3,506
6350-0029	Rear 4" NST waterway inlet (PR) for rear mounted aerials. Includes 4" Akron handwheel controled shut-off vlvs, relief vlvs and chrome caps. Available only on CR100/92RM and HP100 Platform WOP, inlet replaces small compts at lower rear of body.	$9,204
6350-0031	Auxiliary waterway inlet isolation valve - 4" electric controlled Akron. Mounted to allow aux inlet to be connected while flowing waterway from on-board pump. Includes relief valve and bleeder outboard of 4" valve.	$3,890
6350-0033	Waterway inlet shut-off valve - 4" electric controlled Akron. Mounted below ladder tunnel between torque box and rear of body. Includes relief valve and bleeder outboard of 4" valve. Note: Std aerial relief valve to be located ahead of 4" valve.	$3,890

6350-0034	3.5" Waterway Class 1 pressure gauge 0 to 300. Locate next to waterway inlet.	$200
6350-0035	2.5" Class 1 Pressure Gauge (30-0-400). Waterway, Color: [#COL]	$215
6350-0036	3.5" Waterway pressure gauge Ashcroft Gauge. Locate next to waterway inlet.	$200
6350-0037	2.5" Waterway Class 1 pressure gauge 0 to 300. Locate next to waterway inlet.	$177
6350-0038	Relief valve Hale P30 for aerial waterway. Required with tip vlv option. For use with three section aerial only.	$906
6350-0039	Akron 2.5" valve for ladder tip. Includes alum manifold and butterfly valve to shut-off monitor. Requires high flow W/W relief vlv. HP78 only.	$2,496
6350-0040	2.5" Waterway Span pressure gauge 30 to 600. Locate next to waterway inlet.	$177
6350-0041	Waterway inlet check valve 4" (PR). Includes bleeder outboard of valve. Locate on driver and officer side.	$1,229
6350-0042	Dual read 3.5" Waterway Class 1 pressure gauge (30-0-400 psi/100-0-2758 KPA). Locate next to waterway Inlet.	$237
6350-0043	Auxiliary waterway inlet isolation valve - 4" electric controlled Akron. Mounted to allow aux inlet to be connected while flowing waterway from on-board pump. Includes bleeder outboard of 4" valve. Control to at the pump operator panel.	$3,480
6350-0044	3.5" Waterway Span pressure gauge 30 to 600. Locate next to waterway inlet.	$202
6350-0045	Pressure gauge Class1 digital for the aerial waterway. Gauge to be located at the aerial turntable control station.	$1,000
6350-0048	Waterway shut-off valve 4" Akron elect model 9313. Mounted to allow waterway inlet to be used as a discharge. Master control to be located adjacent to the auxiliary waterway inlet, slave control located on turntable console.	$4,355
6350-0049	2.5" FNST x 2.5" MCSA Chrome elbow with 2.5" FCSA x 1.5" MNPSH reducer and 1.5" cap for platform / ladder discharge valve.	$246
6350-0050	2.5" Pressure Gauge Dual Read (30-0-600 psi/100-0-4140 KPA). Locate next to waterway inlet Color: [#COL].	$176
6350-0051	2.5" Waterway Class 1 pressure gauge 0 to 300. Locate on aerial turntable console rear facing.	$226
6350-0052	2.5" chrome elbow with 2.5" FNST x 1.5" MNPSH reducer and 1.5" cap for platform / ladder discharge valve.	$241
6350-0054	3.5" Waterway Class 1 pressure gauge 0-400. Locate next to waterway inlet.	$199
6350-0055	Vacuum breaker for waterway.	$333
6350-0056	Waterway shut-off valve - 4" electric controlled Elkhart unibody. Mounted in waterway riser piping.	$3,886
6350-0057	Rear 5" NST waterway inlet for rear mounted high flow aerials. Piping to run on top of torque box and "Y" into waterway pipe below swivel. Includes chrome cap.	$1,405
6350-0058	Rear 5" NST waterway inlet for rear mounted aerials. Includes chrome cap. Requires TB with 5" wway pipe.	$1,405
6350-0059	The rear waterway drain to be controlled by a cable IPOS. Locate control at rear body adjacent to waterway inlet.	$305
6350-0060	3.5" Waterway Class 1 pressure gauge. Locate next to waterway inlet. Color: [#COL].	$216
6400-0000	Breathing air platform with (2) 300CF cylinders. Includes low air alarm.	$7,969
6400-0001	Breathing air platform with (2) 444CF cylinders. Includes low air alarm.	$8,995
6400-0002	Breathing air platform with (2) 509CF cylinders. Includes low air alarm.	$11,227
6400-0003	Breathing air platform with (1) 444CF cylinder. Includes low air alarm.	$6,747
6400-0004	Breathing air ladder with (1) 300CF cylinder. Includes low air alarm.	$7,757
6400-0005	Breathing air ladder with (2) 300CF cylinders. Includes low air alarm.	$9,486
6400-0006	Breathing air ladder with (1) 444CF cylinder. Includes low air alarm.	$7,865
6400-0007	Fill hose 50' 2250 PSI for 300CF cylinders.	$769
6400-0008	Fill hose 50' 5000 PSI for 444CF cylinders.	$897
6400-0009	Fill hose 50' 10,000 PSI for 509CF cylinders.	$1,099
6400-0010	Additional breathing air outlet at turntable console. Includes filter.	$591
6400-0011	Breathing air outlets additional in platform (PR).	$219
6400-0012	Breathing air ladder with (2) 444CF cylinders. Includes low air alarm.	$10,514
6400-0013	Breathing air platform with (1) 509CF cylinder. Includes low air alarm.	$8,388
6400-0014	Breathing air ladder with (1) 509CF cylinder. Includes low air alarm.	$9,506
6400-0015	Fill hose 100' 5000 PSI for 444CF cylinders.	$1,791
6400-0016	Breathing air outlets, additional (PR) on ladder fly section. These outlets shall be piped from the tip manifold back down to the lower end of the fly where the outlets will be mounted. It will align at the monitor when the ladder is fully extended.	$1,288
6500-0000	Hose box for 50' of 1.75" DJ hose located [#LOC].	$565
6500-0001	Hose box for 50' of 2.5" DJ hose [#LOC].	$569
6500-0011	Pike pole tube for 6' pole on ladder. Location: [#LOC].	$236
6500-0012	Pike pole tube for 8' pole on ladder. Location: [#LOC].	$236
6500-0013	Pike pole tube for 10' pole on ladder. Location: [#LOC].	$236
6500-0014	Pike pole tube for 12' pole on ladder. Location: [#LOC].	$236
6500-0015	Mansaver safety bars mounted at turntable (PR).	$1,583
6500-0016	Lifting eyes on platform (PR). Not available on Bronto.	$286

6500-0017	Lifting arm for Mid-Mount platform.	$531
6500-0018	Stokes basket receiver for use with Ferno Washington Model 71 Stokes on 95 RM platforms. Includes brackets to mount stokes on base of ladder. With a center hosebed or without a pump, the stokes basket shall mount on the right side of the base section opposite the breathing air bottles. With a side hosebed, the stokes basket shall mount on the right side of the base section ahead of the sign plate. Stokes not included.	$1,094
6500-0019	Axe bracket mounted on aerial. For use with a 6 lb. axe only. Location: [#LOC].	$395
6500-0020	Stokes basket receiver for use with Ferno Washington Model 71 Stokes on 95 MM platforms. Stokes not included.	$1,322
6500-0023	Dual rope roller for aerial.	$2,214
6500-0024	Lifting eye at tip of ladder. N/A on HM100 with pinned wway to tip.	$392
6500-0025	Rear hand rail extension (PR) on turntable for center access step on rear of the body. HP75 / HP78 center hose bed only.	$272
6500-0026	Stokes basket receiver for use with Ferno Washington Model 71 Stokes on HP100 platform. Includes brackets to mount stokes to base section right side ahead of sign plate (if equipped). Stokes not included.	$1,903
6500-0027	Lifting eye / tie-off package for HP100 Platform. Includes lifting eyes each side at tip of base and a tie-off point on each turntable trunnion.	$1,788
6500-0028	Rappelling rope guides located each side on front handrail of platform. HP95 and HP100 Platforms only.	$223
6500-0030	Hard suction storage box (PR) with nylon straps. (1) each side of ladder base section. Outer wall to be used as sign plate. Color: [#COL]	$1,726
6500-0031	Hose box for 10' of 1.75" DJ hose located [#LOC].	$538
6500-0032	Vogel auto lube system for aerial device (up to 8 points). Includes Dia Plt cover w/slot to view grease level.	$2,425
6500-0033	Mansaver safety bars w/o padded cover mounted at turntable (PR).	$1,640
6500-0037	Storage box with hinged lid & butterfly latch for miscellaneous items, rated for 10lb. capacity. Approx size: 8W x 8L x 20D. Box location: [#LOC].	$395
6500-0038	Stokes basket mounting bracket outside base section. Location: left side ahead of sign plate.	$724
6500-0039	Equipment mounting plate 6" W x height of ladder section. Loc: Outboard on right side of fly approx 11" from tip. Permanent mounted equipment not to exceed 5 lbs.	$392
6500-0040	Hose box for 100' of 1.75" DJ hose located [#LOC].	$603
6500-0041	Diamond plate storage box with hinged lid for chain saw. Saw to store with blade extended thru dealer supplied slot in sub floor. Located on officer side of aerial turntable.	$657
6500-0042	Stokes basket mounting bracket outside base section. Location: right side rear of sign plate.	$724
6500-0043	Retaining pin for pike pole storage tube. Pin to prevent pike pole form vibrating out of stored position on ladder section.	$90
6500-0044	Center turntable handrail to flare outward approx 8" to provide additional working space. HP100 SideStacker ladder only.	$961
6500-0046	Mask box in platform for two masks. Box is in addition to box supplied with breathing air system.	$380
6500-0048	Turntable handrails - adjustable. Height to be able to be adjusted to allow for low height stations. Provide two settings, approx 2" and 4" lower than std.	$950
6500-0049	Lifting eyes each side at tip of base. Rating is 400 lbs ea, 800 lbs pr.	$1,216
6500-0053	Hose box for 25' of 1.75" DJ hose located [#LOC].	$543
6500-0054	Guard for quartz light on front of platform (EA). 1/8" Aluminum plate around top and sides of light.	$197
6500-0055	Lifting eyes each side at tip of base. Rating is 1000 lbs ea, 2000 lbs pr.	$1,216
6500-0057	Left & Right side turntable handrails to flare out to rear, to provide additional working space. HP100 platform with full turntable only.	$1,142
6500-0058	Stokes basket receiver for use with Ferno Washington Model 71 Stokes on HP100 platform. Stokes and base mounting brackets not included.	$1,903
6500-0059	Stokes basket receiver for use with Ferno Washington Model 71 Stokes on HP100 platform. Includes brackets to mount stokes to base section left side ahead of sign plate (if equipped). Stokes not included.	$1,903
6500-0060	Heavy duty safety belt anchor points in platform (6). Anchors to be rated for 300# with a six foot long maximum shock lanyard.	$799
6500-0061	Reducer 3.5"F x 2.5"M with mtg bracket. Locate at tip on right side.	$687
6500-0062	Stokes basket receiver for use with Junkin MIL-8131-WM Stokes on HP100 platform. Includes brackets to mount stokes to base section right side ahead of sign plate (if equipped). Stokes not included.	$1,903
6500-0063	Stokes basket receiver for use with Cascade model CT-PSS1 Stokes on 95 RM platforms. Includes brackets to mount stokes on base of ladder. With a center hosebed or without a pump, the stokes basket shall mount on the right side of the base section opposite the breathing air bottles. With a side hosebed, the stokes basket shall mount on the right side of the base section ahead of the sign plate. Stokes not included.	$1,094
6500-0065	Storage box with hinged lid & butterfly latch for miscellaneous items. Approx size: 6W x 14L x 15D. Box location:right side tip of ladder base.	$515

6500-0067	PAC TRAC postive locking bracket (PR) for 8' pike pole on ladder includes stop plate to prevent the pole from sliding. location: right side of base horizontally mounted behind sign plate.	$317
6500-0068	PAC TRAC postive locking bracket (PR) for 10' pike pole on ladder includes stop plate to prevent the pole from sliding. location: right side of base horizontally mounted behind sign plate.	$317
6500-0069	PAC TRAC postive locking bracket (PR) for 12' pike pole on ladder includes stop plate to prevent the pole from sliding. location: right side of base horizontally mounted behind sign plate.	$317
6500-0070	Diamond plate storage box with hinged lid for chain saw. Box to be approx 33L x 12W x 16D located on right side of aerial turntable. HP100L/CR100/137L/92Pltfrm with full T/T only.	$698
6500-0071	PAC TRAC postive locking bracket (PR) for 12' Boston Rake on ladder. Includes stop plate to prevent the rake from sliding. location: left side of base horizontally mounted behind sign plate.	$317
6500-0072	Guard shall be provided at tip for intercom speaker to protect against damage.	$162
6500-0073	Guard shall be provided at tip for ladder controls to protect against damage.	$162
6500-0074	Axe bracket mounted on aerial. For use with a 8 lb axe only. Location: [#LOC].	$513
6500-0075	Stokes basket mounting bracket for Rescue Tech 1 Model# 620124 outside base section. Location: left side ahead of sign plate.	$724
6500-0076	PAC TRAC positive locking bracket (PR) for storing 10' attic ladder on ladder base includes stop plate to prevent the attic ladder from sliding. Location: right side of base horizontally mounted behind sign plate.	$482
6500-0077	Stokes basket receiver for use with Ferno Washington Model 71 Stokes on 95 MM platforms. Stokes and storage brackets on side of base not included.	$876
6500-0078	Lifting eye at tip of ladder (250lb rating).	$392
6500-0079	Stokes basket receiver for use with Junkin Model MIL-8131-W Stokes on 95 MM platforms. Stokes and storage brackets on side of base not included.	$876
6500-0080	Storage box with hinged lid & butterfly latch for miscellaneous items, rated for 30lb. capacity. Approx size: 5.5W x 18L x 40D. Box location: [#LOC].	$516
6500-0081	Hose box for (2) 50' rolls of 1.75" DJ hose. Position box on platform so vent holes are to the inside IPO outside. Location: [#LOC].	$603
6500-0082	Stokes basket receiver for use with Ferno Washington Model 71 Stokes on 95 RM platforms. Includes brackets to mount stokes to the inside of the aerial sign plate on the right side of the base section. Stokes not included.	$1,571
6500-0083	PAC TRAC positive locking brackets, four (4) for two (2) 8' pike poles on ladder includes stop plate to prevent the pole from sliding. Location: Two (2) brackets right side and two (2) left side of base horizontally mounted behind sign plate for one (1) pike pole each side.	$634
6500-0084	Stokes basket receiver for use with CMC Rescue-CMC Pro Series Model #726112-T1 Stokes basket on HP100 platform. Includes brackets to mount stokes to base section right side ahead of sign plate (if equipped). Stokes not included.	$1,903
6500-0085	Stokes basket receiver for use with CMC Rescue-CMC Pro Series Model #726112-T1 stokes on HP100 platform. Stokes and base mounting brackets not included.	$1,903
6500-0086	Stokes basket storage box for Ferno Washington model 71 stokes on aerial base section. Includes hinged lid with gas springs & notch to clear extension system components. Locate right side on side of base section ahead of sign plate (if equipped). HP100 platform only	$2,156
6500-0087	Stokes basket storage box for Ferno Washington model 71 stokes on aerial base section. Includes hinged lid with gas springs & notch to clear extension system components. Locate right side on side of base section ahead of sign plate (if equipped). HP100 platform only	$2,273
6550-0000	Outrigger warning lights (4). Trucklite Model 60015R.	$199
6550-0001	Outrigger warning lights (PR) LED. Truck-Lite model 91R.	$297
6550-0002	Outrigger warning lights (4) LED. Truck-Lite model 91R.	$591
6550-0003	Whelen 700 Series [#COL] strobe lights on platform (PR). The lights shall be switched with aerial master and located one each side on the [#LOC].	$943
6550-0004	Whelen strobe lights at ladder tip (PR) with [#COL] lenses. Switched with aerial master.	$950
6550-0009	Whelen 700 Series [#COL] LED lights on platform (PR). The lights shall be switched with aerial master and located one each side on [#LOC].	$625
6550-0010	Outrigger warning lights (PR). Trucklite Model 60015R.	$101
6550-0011	Outrigger warning lights (PR). Weldon Model 1010.	$101
6550-0013	Federal QL64XF LED red warning lights (4). Located down low across front of platform wired to upper level warning lights.	$1,162
6550-0014	Whelen 600 Super LED red warning lights (4). Located down low across front of platform wired to upper level lights.	$1,261
6550-0015	Code3 65R LED red warning lights (4). Located down low across front of platform, wired to the upper level warning lights.	$1,269
6550-0016	Federal QL64XF [#COL] LED warning lights on platform (PR). The lights shall be switched with aerial master and located one each side on [#LOC].	$544
6550-0017	Whelen 600 Super LED [#COL] LED warning lights on platform (PR). The lights shall be switched with aerial master and located one each side on [#LOC].	$592

6550-0018	Code 3 65 [#COL] LED warning lights on platform (PR). The lights shall be switched with aerial master and located one each side on [#LOC].	$560
6550-0019	Outrigger warning lights (PR) LED. Whelen 600 Super LED.	$552
6550-0020	Whelen 500 Series TIR6 Super-LED lights at ladder tip (PR) with red lenses. Switched with aerial master.	$746
6550-0022	LED warning lights on the sides of the platform to be switched with either upper level warning or aerial master warning.	$198
6550-0023	Federal IMPAXX model IPX 302 [#COL] LED lights (4) with clear lenses at ladder tip. Lights located (2) each side, (1) side facing and (1) forward facing. Lights to be synchronized together and switched with aerial master.	$1,064
6550-0025	Whelen 500 Series TIR6 Super-LED lights at ladder tip (PR) with blue lenses. Switched with aerial master.	$746
6550-0026	Whelen 600 Super LED red and blue warning lights (4). Located down low across front of platform alternating red/blue wired to upper level lights.	$1,261
6550-0027	Code 3 model 468 [#COL] LED warning lights with clear lenses on platform (PR). The lights shall be switched with aerial master and located one each side on [#LOC].	$580
6550-0028	Whelen M4RC Super-LED lights at ladder tip (PR) with clear lenses. Switched with aerial master.	$811
6550-0029	Outrigger warning lights (PR) LED. Federal Signal Quadraflare LED.	$555
6550-0032	Whelen M6 Super LED red warning lights (4). Located down low across front of platform wired to upper level lights.	$1,301
6550-0033	Whelen M6 Super LED [#COL] warning lights on platform (PR). The lights shall be switched with aerial master and located [#LOC].	$632
6550-0034	Outrigger warning lights (4) LED. Whelen M9RC red with clear lens.	$2,126
6550-0035	**OBS use 6550-0048** Whelen VTC3R Vetex Super-LED lights at ladder tip (PR). Red with clear lenses and chrome bezels. Switched with aerial master.	$497
6550-0036	Whelen 600 Super LED [#COL] LED warning lights on platform (PR). The lights shall be switched with upper level warning and located one each side on [#LOC].	$592
6550-0037	Four (4) Federal Signal Qudraflare LED red light heads shall be provided. The rectangular lights shall include chrome flanges. The lights shall be surface mounted on the outrigger covers	$1,109
6550-0038	Whelen 600 Super LED split red/clear warning lights (4). Located down low across front of platform wired to upper level lights.	$1,562
6550-0039	Whelen M6 Super LED red and blue warning lights with clear lens (4). Located down low across front of platform red outboard, blue inboard wired to upper level lights.	$1,301
6550-0040	Additional LED outrigger warning lights (8). Lts to be recessed on inward facing front and rear ends of each outrigger cover.	$332
6550-0041	Outrigger warning lights (4) LED. Whelen M6 Super LED.	$1,265
6550-0042	Warning light Whelen Dominator Plus model DP4ARAR with (4) LINZ6 LEDs Amber, Red, Amber, Red. Location: [#LOC]. The light shall be switched with emergency lighting.	$1,047
6550-0043	Whelen M6 [#COL] Super LED warning light (EA). Location: [#LOC]. The light shall be switched with aerial master power.	$533
6550-0044	Additional LED outrigger warning lights (4). Lts to be recessed on inward facing front and rear ends of each outrigger cover.	$167
6550-0045	Whelen 600 Super LED red warning lights (4) with clear lenses. Located down low across front of platform wired to upper level lights.	$1,261
6550-0046	Federal QL64XFC LED red warning lights (4)with clear lenses. Located down low across front of platform wired to upper level warning lights.	$1,162
6550-0047	Outrigger warning lights (PR) LED. Federal Signal Quadraflare red LED with clear lenses.	$555
6550-0048	Whelen VTC6R Vetex Super-LED lights at ladder tip (PR). Red with clear lenses and chrome bezels. Switched with aerial master.	$497
6550-0049	Whelen M6 series Super LED red warning lights with clear lenses model number M6RC (4). Located down low across front of platform wired to upper level lights.	$1,301
6550-0050	Whelen 500 Series TIR6 Super-LED lights at ladder tip (PR) red with clear lenses. Switched with aerial master.	$746
6560-0001	Ladder climbing lights. Lens colors shall be [#COL].	$2,373
6560-0002	Spot light 12V located [#LOC].	$392
6560-0003	Flood light 12V located [#LOC].	$392
6560-0004	Collins light FX-12 located [#LOC].	$507
6560-0005	Flood lights Unity at base (PR).	$459
6560-0006	Collins light FX-12 at base (PR).	$1,109
6560-0008	Quartz light 500W with pole platform. Hardwired. Requires 110V twist lock at tip option. The light shall be located [#LOC].	$605
6560-0009	Quartz light 500W at tip. Hardwired. Requires 110V twist lock at tip option. The light shall be located [#LOC].	$322
6560-0010	Quartz light 750W Magnafire model KR1436 platform mounted. Requires 110 volt twistlock receptacle at tip option. Includes hardwired switch on platform console. The light shall be located [#LOC].	$884

6560-0011	Quartz light 750W Magnafire with pole model KR236-S mounted at platform. Requires 110V twist lock receptacle at tip option. The light shall be located [#LOC].	$1,248
6560-0012	Quartz light 750W Magnafire model KR636-S. Requires 110-volt receptacle at tip option. The light shall be located [#LOC].	$1,001
6560-0013	Quartz light 750W Magnafire permanently mounted recessed in the center of the bottom heat shield on the platform. Requires 110 receptacle at tip option. Includes hardwired switch on platform console. Midmount only.	$818
6560-0014	Quartz light 750W Magnafire (PR) permanently mounted recessed in the front corners of the bottom heat shield on the platform. Requires 110 receptacle at tip option. Includes hardwired switch on platform console. Midmount only.	$1,639
6560-0016	Quartz light Fire Research Focus 750W/110V model FCA540-S75-CLP37-ON-SW with 37" pull up pole. The light shall be located [#LOC].	$1,436
6560-0017	Quartz light Fire Research Focus 750W/110V model FCA300-S75 with aerial mount. The light shall be located [#LOC].	$930
6560-0018	Quartz light Fire Research Focus 750W/110V model FCA570-S75-ON without pole. The light shall be located [#LOC].	$1,100
6560-0019	Quartz light Fire Research Optimum 750W/110V model OPA570-S75-ON without pole. The light shall be located [#LOC].	$1,164
6560-0026	Quartz light Fire Research Optimum 750W/110V model OPA540-S75-CLP37-ON-SW with 37" pull up pole. The light shall be located [#LOC].	$1,495
6560-0028	Grille guard for Magnafire light(s) on aerial.	$139
6560-0029	Ladder climbing lights Truck-lite LED. Lens colors shall be [#COL].	$2,665
6560-0030	Grille guard for Optimum light(s) on aerial.	$135
6560-0031	Quartz light 750W Magnafire 5000 model KR656-S. Requires 110-volt twist lock receptacle at tip option. The light shall be located [#LOC].	$1,001
6560-0033	Quartz light Fire Research Focus 750W/110V model FCA200-S75 (PR) permanently mounted recessed in the front corners of the bottom heat shield on the platform. Requires 110 receptacle at tip option. Includes hardwired switch on platform console. Midmount only.	$1,859
6560-0034	Three way switching for quartz light on front of platform to allow light to be controlled from platform console, turntable console or cab. Includes 12v/110v relay and switches at platform and base consoles. Requires add'l 12v switch option in cab.	$649
6560-0036	Quartz light MagnaFire 70W/12V model KR-1331-S low profile permanent mount with angle bracket. Includes switch on light. Location(s): [#LOC].	$1,358
6560-0037	Collins light FX-6 located [#LOC]. No switch at lighthead.	$507
6560-0038	Additional turntable console lights (PR). Locate (1) each side ahead of aerial controls. HP100 platform only.	$96
6560-0039	Additional floor strip light in platform (EA). Location: [#LOC].	$100
6560-0040	Whelen model PSBP12C LED spot light located [#LOC].	$523
6560-0041	Whelen LED model PFBP12C at base (PR).	$967
6560-0042	Quartz light 750W Magnafire 5000 model KR1456 platform mounted. Requires 110 volt twistlock receptacle at tip option. Includes hardwired switch on platform console. The light shall be located [#LOC].	$872
6560-0043	Quartz light Fire Research Focus 500W/110V model FCA200-S50 permanently mounted recessed in the center of the bottom heat shield on the platform. Requires 110 receptacle at tip option. Midmount only.	$846
6560-0044	Quartz light Fire Research Optimum 750W/110V model OPA200-S75 recess mount. Includes hardwired switch on platform console. The light shall be located [#LOC].	$1,065
6560-0045	Outrigger flood lights LED (4). Trucklite model 81380.	$651
6560-0046	Outrigger flood lights LED (2) IPOS. Trucklite model 81380.	$326
6560-0048	Collins light FX-HID located [#LOC].	$577
6560-0049	Collins light FX-HID at base (PR).	$1,250
6560-0050	Light Whelen Pioneer Plus model PCP2 flood/spot with pedestal mount. Location(s): [#LOC].	$2,093
6560-0051	Quartz light Fire Research Focus 1000W/240V model FCA570-M12-ON without pole. The light shall be located [#LOC].	$1,172
6560-0052	Quartz light 900W Magnafire with 30" pole model KR239-S mounted at platform. Requires 220V at tip option. The light shall be located [#LOC].	$1,289
6560-0053	(No longer used; See sales code 6560-0040) Whelen PSBP12C LED spot light located [#LOC].	$484
6560-0054	Quartz light 12V 70W Magnafire with pole model KR231-S mounted at platform. The light shall be located [#LOC].	$1,462
6560-0055	Light Whelen Pioneer Plus model PFP1P with ROM KR-SB-600 pedestal mount. Switched at light head and base console. Location(s): [#LOC].	$1,227
6560-0056	Flood lights Whelen PFP1P at base (PR). Includes Havis KR-SB-600 fixed mount.	$2,928
6560-0057	Outrigger flood lights LED (4). Whelen model PFBS6.	$1,096
6560-0060	LED floodlight Whelen Pioneer with pole model KR-SB-2PFP2AC-W2-S-SL mounted at platform. Requires 110V twist lock receptacle at tip option. The light shall be located [#LOC].	$2,122

6560-0062	Fire Research Evolution 12V LED model FCA570-V15-ON without pole. The light shall be located [#LOC].	$1,885
6560-0063	Light Whelen Pioneer Plus model PFP2AC with permanent mount (ROM model KR-SB-6PFP2AC). Requires 110-volt receptacle at tip option. Location(s): [#LOC].	$1,903
6560-0064	Light Whelen Pioneer Plus PFP1AC. Model KR-SB-6PFP1AC-S. Requires 110 volt twist lock receptacle at tip option. Location(s): [#LOC].	$1,388
6560-0065	Whelen model PFBP12C LED flood light located [#LOC].	$483
6560-0066	Light Fire Research Spectra 120V LED model SPA540-K20-CLP37-ON-SW with 37" pull up pole. The light shall be located [#LOC].	$2,835
6560-0067	Light Fire Research Spectra LED 120V model SPA570-K20 permanent mount. Requires 110-volt twist lock receptacle at tip option. Location(s): [#LOC].	$2,405
6560-0068	Light Fire Research Spectra 120V LED model SPA850-K20 with flat mount. Location: [#LOC].	$2,146
6560-0070	Quartz light 750W Magnafire model KR-2656 recess mount. Requires 110 receptacle at tip option. Includes hardwired switch on platform console. The light shall be located center front of platform.	$673
6560-0071	Ladder climbing lights Luma-Bar Pathfinder LED strip (both sides of 3 section ladder). Color: blue.	$6,623
6560-0072	Light Whelen Pioneer Plus model PFP2AC 120V with recess mount. Requires 110-volt receptacle at tip option. Includes hardwired switch on platform console. The light shall be located [#LOC].	$2,310
6560-0073	Light Whelen Pioneer Plus model PFP2AC w/bail mount permanently bolted and recessed in the center of the bottom heat shield on the platform as mounted, to the bail mount. Requires 110-volt receptacle at tip option. Includes hardwired switch on platform console. Midmount only.	$2,177
6560-0074	Whelen model PSBP12C LED spot lights (PR). Located: on the left and right side of aerial base.	$1,044
6560-0075	Federal Signal QL97LEDSCENE LED scene light (EA) with weatherproof connectors. Switch on platform console. Locate [#LOC].	$1,196
6560-0076	Fire Research Evolution 12V LED model FCA300-V15 with aerial mount. Includes hardwired switch on platform console. The light shall be located [#LOC].	$1,691
6560-0077	Ladder climbing lights LED strip (one side of 3 section ladder). Color:[#COL].	$2,427
6560-0078	Ladder climbing lights Luma Bar Pathfinder LED strip for HP75/78 ladder (one side). Color: [#COL].	$3,623
6560-0079	Ladder climbing lights Luma Bar Pathfinder LED strip for HP75/78 ladder (both sides). Color: [#COL].	$7,246
6560-0080	Ladder climbing lights Luma Bar Pathfinder LED strip for 4 section aerial (one side). Color: [#COL].	$4,012
6560-0081	Ladder climbing lights Luma-Bar Pathfinder LED strip for 4 section aerial (both sides). Color: [#COL].	$8,024
6560-0082	Ladder climbing lights Luma Bar Pathfinder LED strip for CR137 (one side). Color: [#COL].	$6,628
6560-0083	Ladder climbing lights Luma Bar Pathfinder LED strip for CR137 (both sides). Color: [#COL].	$13,255
6560-0084	Ladder climbing lights Luma Bar Pathfinder LED strip for 95-Platform and HP100 Platform (one side). Color: [#COL].	$4,125
6560-0085	Ladder climbing lights Luma Bar Pathfinder LED strip for 95-Platform and HP100 Platform (both sides). Color: [#COL].	$8,251
6560-0086	Quartz light Fire Research Focus 1500W/240V model FCA540-M15-CLP37-ON-SW with 37" pull up pole. [#LOC].	$1,532
6560-0087	Quartz light Fire Research Focus 1500W/240V model FCA570-M15 without pole. Location(s): [#LOC].	$1,371
6560-0089	Light Whelen model PSR00XRR LED (EA) red 3rd brake light. Location: [#LOC].	$177
6560-0090	LED floodlight Whelen Pioneer with pole model KR-SB-2PFP1-W2-S-SL mounted at platform. Switched at lighthead and base console. Lights shall be located: [#LOC].	$1,553
6560-0091	LED floodlight Whelen Pioneer with pole model KR-SB-2PFP2AC-W2-S-SL powder coated black mounted at platform. Requires 110V twist lock receptacle at tip option. The light shall be located [#LOC].	$2,122
6560-0092	Wire guard for FRC Evolution light(s) on aerial. Location: [#LOC].	$135
6560-0093	Light Whelen Pioneer Plus model PFP2AC powder coated black with permanent mount (ROM model KR-SB-6PFP2AC) powder coated black. Requires 110-volt receptacle at tip option. Location(s): [#LOC].	$1,903
6560-0097	Light Fire Research Spectra LED 12V model SPA570-Q20 permanent mount. The light shall be fitted with a weather-resistant switch and hard-wired to the aerial tip power circuit. Location(s): [#LOC].	$2,330
6570-0003	110V/15A twist lock receptacle at tip.	$2,534
6570-0007	Intercom Speaker - additional located at the monitor.	$639
6570-0008	Intercom aerial 2-way. Atkinson Dynamics (Federal). Speaker to be located to rear of platform on Bronto units.	$1,415

6570-0009	Intercom aerial 3-way. Atkinson Dynamics (Federal). Speaker to be located to rear of platform on Bronto units.	$2,837
6570-0010	Aerial Information System (AIS) for ladder.	$6,918
6570-0011	Aerial Information System (AIS) for ladder. Includes engine information.	$7,697
6570-0012	Aerial Information System (AIS) for platform.	$9,037
6570-0013	Aerial Information System (AIS) for platform. Includes engine information.	$10,148
6570-0014	Class1 aerial information center.	$3,385
6570-0015	110V/20A twist lock receptacle at tip.	$2,534
6570-0017	Duplex receptacle at tip with (1) 3-prong NEMA 5-15 and (1) twist lock NEMA L5-15 receptacle.	$2,576
6570-0018	Extension alarm for aerial. Alarm to sound at turntable console when aerial is near full extension.	$507
6570-0019	Platform floor lights additional (4). Lights to match standard floor lights.	$216
6570-0021	Duplex receptacle at tip with 3-prong NEMA 5-15 outlets.	$2,576
6570-0022	Air horn switch at aerial turntable control console. Switch to be labeled "Air Horn".	$125
6570-0023	Firepower receptacle at tip.	$2,563
6570-0024	Laser jack pad spotting lights (4).	$4,174
6570-0026	Laser jack pad spotting lights (2).	$2,296
6570-0028	Air horn switch at aerial turntable control console. Switch to be a red button type and be labeled "Air Horn".	$125
6570-0029	Light with alarm on turntable console for low eng oil press, high water temp, low voltage and low air press.	$320
6570-0030	110V/20A duplex household receptacle at tip.	$2,534
6570-0033	Air horn switch at aerial turntable control console. Switch to be labeled "Evacuation Alert".	$125
6570-0034	Additional 110V/20A twist lock receptacle at tip. Requires 110v to tip option. Location: opposite standard at tip.	$292
6570-0035	110V/15A twist lock receptacle at tip. Wiring from breaker box to tip to be 220V.	$2,631
6570-0036	Akron 9313 auxiliary waterway discharge vlv control on turntable console. Requires waterway discharge with Akron electric valve and three available collector rings.	$1,086
6570-0038	Cradle alignment light on turntable console.	$494
6570-0039	110V/20A twist lock receptacle at tip. Wiring from breaker box to tip to be 220V.	$2,631
6570-0040	110V/30A twist lock receptacle at tip.	$2,631
6570-0042	120V/250V 20A Daniel Woodhead Non-NEMA model 67W08 receptacle at tip.	$2,888
6570-0043	110V/20A twist lock receptacle at tip. Receptacle power is provided via inlet receptacle (not generator/breaker box). Includes a [#COL] cover. Location: [#LOC].	$2,631
6570-0044	Aerial information displays located at TT and platform console.	$3,385
6570-0045	Switch at aerial turntable control console to disable flashing light at aerial tip. Switch to be labeled "Flashing Light".	$125
6570-0046	12 VDC junction box located outside of platform near the breathing air block (no outlet, power source only). This 12 VDC circuit shall be activated with aerial master.	$285
6600-0000	Folding ladder bracket. Locate inside the right side fly section for a FL-10.	$535
6600-0001	Slide out roof ladder bracket. Locate outside base section for a [#LOC]. Available on 95RM, 110, CR100 and HM100.	$1,628
6600-0002	Roof ladder bracket J style mount. Locate outside base section for a [#LOC]. Available on HP75/78, HP100, and HP95.	$1,676
6600-0003	Roof ladder bracket lift out. Locate inside the left side fly section for a PRL-12. Avail on 95-Platform, 95MM and HP100 Platform.	$307
6600-0004	Lift out style roof ladder bracket. Locate outside base section for a [#LOC]. Available on 95RM, 110, CR100 and HM100.	$1,628
6600-0005	Roof ladder bracket lift out. Locate inside the left side fly section for a PRL-14. Avail on 95-Platform, 95MM and HP100 Platform.	$307
6600-0006	Roof ladder bracket lift out. Locate inside the left side fly section for a PRL-16. Avail on 95-Platform, 95MM and HP100 Platform.	$307
6600-0008	Roof ladder bracket lift out. Locate inside the left side fly section for a 775A-12. Avail on HP100P, 95RM and 95MM.	$307
6600-0009	Parapet roof ladder bracket for platform. For use with Alcolite and Duo Safety roof ladders (not included). Available on HP100 Pltfrm only.	$1,686
6600-0010	Parapet roof ladder bracket for platform. For use with Alcolite and Duo Safety roof ladders (not included). Available on HP95 MM Pltfrm only.	$1,686
6600-0011	Roof ladder bracket lift out. Locate inside the right side fly section for a 775A-10. Avail on HP100P, 95RM and 95MM.	$307
6600-0012	In addition to the lift-out ladder bracket in the fly section a guard plate shall be installed on the inside of the fly section. To guard against the roof ladder hooks from accidently following into the ladder fly structure when the aerial is extending or retracting.	$128
6750-0000	Aerial sign plates 10 x 144 (PR). Available on Booms, HP75 and HP100 only. Does not include lettering. Color: [#COL].	$1,376
6750-0001	Aerial sign plates 16 x 144 (PR). Available on HP95, HP100L and HP100P only. Does not include lettering. Color: [#COL]	$1,300

6750-0002	Aerial sign plates 22 x 144 (PR). Available on HM100, HM110, 95, CR100 and CR137 only. Does not include lettering. Color: [#COL].	$1,711
6750-0004	Aerial sign plates 12 x 144 (PR). Available on HP78, HP100 and HP100 platform only. Does not include lettering. Color: [#COL].	$1,432
6750-0006	Aerial sign plates 16 x 144 driver and 12 x 144 officer. Does not include lettering. Color: Job color.	$1,582
6750-0007	Sign plate for rear of aerial turntable handrails. To be two piece painted smooth aluminum plate split in the center and hinged on each side. Does not include lettering. Color: [#COL]	$724
6750-0009	Aerial sign plates 10 x 168 (PR). Available on HP75/78. Does not include lettering. Color: [#COL]	$1,606
6750-0010	Brackets for 22" x 144" aerial sign plate. For use with roof ladder bracket on opposite side. Available on HP100 Platform.	$1,481
6750-0011	Aerial sign plates 22 x 144 (PR) un-painted. Available on HM100, HM110, 95 and CR100 only. Does not include lettering.	$1,469
6750-0013	Sign plate for rear of aerial turntable handrails. Single piece un-painted smooth aluminum plate. Does not include hinges or lettering.	$439
6850-0002	Pump panel control station. HP75 / HP78 and 50' rear mount boom.	$3,253
6850-0003	Ladder tip controls.	$9,604
6850-0004	Short Jack System HP75 / HP78.	$7,621
6850-0005	Lock for ladder controls. 50/HP75/HM100/HP100/CR100/110 only.	$243
6850-0006	Additional handheld jack controller at rear of body. Locate in rear jack control box. Includes selector switch at aerial master panel.	$2,102
6850-0008	Platform leveling system to allow adjustment of platform pivot angle from cab. Includes light on back of platform visible by driver to indicate platform is in alignment with ladder.	$2,220
6850-0009	Hinged cover for platform control console. Diamond plate with rubber hood latch to hold closed.	$388
6850-0010	Connector for handheld jack control at rear of body. Loc: [#LOC]	$471
6850-0011	Gas spring for aerial ladder console cover. To hold cover open at 90 degrees to the side.	$154
6850-0012	Hinged cover for platform control console. Swirl finish smooth plate with gas spring hold-open.	$483
6850-0014	Aerial control station (add'l) located at pump operator's panel. Includes upgrade to elect / hyd aerial control system and monitor controls at pump panel.	$12,150
6850-0015	Aerial turntable console lowered approx 4" to allow for stations with arched doors.	$822
6850-0017	Envelope controls HP100 Platform. Forward extention of aerial to be restricted due to 260" wheelbase.	$619
6850-0019	Vinyl platform console control cover. Color: [#COL].	$230
6850-0020	Aerial control stations (add'l) located at pump operator's panel and ladder tip. Includes upgrade to elect / hyd aerial control system and monitor controls at pump panel. Tip controls to be "creep" style.	$14,802
6850-0021	Additional handheld jack controller at front of cab. Locate in front bumper officer side tray. Includes selector switch at aerial master panel.	$2,102
6850-0023	Retraction stops for ladder. Required to allow for nozzle guard on HP75/78 with 225-230 WB S/A and all T/A.	$437
6900-0000	Aerial flow test - 3rd party.	$408
6900-0002	Aerial 2009 NFPA Certification.	$3,289
6900-0004	Aerial 2009 NFPA Certification. Performed by UL.	$6,922
6900-0005	Aerial flow test - 3rd party.	$408
6900-0006	Aerial flow test - 3rd party.	$408
7000	**Loose Equipment**	
7000-0003	Akron Brass stacked tips w/stream shaper. Base style 3485 & Stacked Tips style 3499.	$556
7600-0005	Pike Pole Fiberglass 6'.	$126
7600-0006	Pike Pole Fiberglass 8'.	$83
7600-0007	Pike Pole Fiberglass 10'.	$159
7600-0008	Pike Pole Fiberglass 12'	$168
7600-0009	Pike Pole Mounting Tube Style (Each)	$201
7600-0016	Wheel chocks 44" NFPA complaint, pair (PR) of Zico SAC-44. Up to 44" diameter tires. Includes mounting brackets.	$475
7800-0000	8' Folding Ladder	$279
7800-0002	Alco-Lite FL-10, 10' folding ladder without shoes.	$233
7800-0003	10' folding Duo-Safety 585-A ladder.	$364
7800-0004	Aluminum Cast Bracket for Duo Safety Folding Ladder - For 8' or 10'	$387
7800-0005	Alco-Lite CJL-14 Combo Ladder A-Frame/Extension	$513
7800-0006	Alco-Lite PRL-12 Roof Ladder	$372
7800-0007	Alco-Lite PRL-14' roof ladder.	$397
7800-0008	14' roof ladder, Duo-Safety 775-A.	$549
7800-0009	Duo-Safety 16' 875-A roof ladder.	$424
7800-0010	Alco-Lite PRL-16' roof ladder.	$476
7800-0011	Alco-Lite PRL-18 Roof Ladder	$517
7800-0012	Alco-Lite TRL-20 Roof Ladder	$756
7800-0013	Alco-Lite AEL-12 Attic Extension Ladder	$495

7800-0014	Alco-Lite PEL-16 Extension Ladder	$644
7800-0016	Alco-Lite PEL-24' 2-section extension ladder.	$812
7800-0017	Alco-Lite PEL3-24 Extension Ladder	$1,170
7800-0018	Extension ladder, Duo-Safety 900-A, 24' 2-section.	$871
7800-0021	Alco-Lite PEL-28' extension ladder.	$1,054
7800-0022	Alco-Lite PEL-30 Extension Ladder	$1,134
7800-0023	Alco-Lite PEL3-35' 3-section extension ladder.	$1,434
7800-0024	Alco-Lite PEL-35' extension ladder.	$1,309
7800-0025	Duo-Safety 1225-A 35' 3-section extension ladder.	$1,453
7800-0026	Alco-Lite TEL3-40P Extension Ladder w/Stay Poles	$2,788
7800-0027	Little Giant model 17 ladder.	$666
7800-0028	Alco-Lite PEL-14 14' 2-Section Extension Ladder.	$623
7800-0029	Alco-Lite PEL-20 Extension Ladder.	$754
7800-0031	Little Giant Model 22 ladder.	$631
7800-0032	Alco-Lite FL-10, 10' folding ladder w/safety shoes.	$233
7800-0038	Alco-Lite PRL-20' roof ladder.	$560
7800-0039	Duo-Safety 1225-A 30' 3 Section Extension Ladder	$1,334
7800-0040	Alco-Lite PEL3-28 Extension Ladder	$1,236
7800-0041	Duo-Safety 1200-A, 28' 2-section extension ladder.	$1,070
7800-0043	Duo-Safety 12' 775-A Roof Ladder	$365
7800-0044	Alco-Lite PEL-12 Extension Ladder	$546
7800-0045	Duo-Safety 1200-A 35' 2 Section Extension Ladder	$1,345
7800-0046	Duo-Safety 300-A 13' combination ladder.	$484
7800-0047	Duo-Safety 925-A 26' 3 Section Extension Ladder	$969
7800-0048	Alco-Lite CJL-10 Combo Ladder A-Frame/Extension	$414
7800-0049	Duo-Safety 1525-A 40' 3 Section Extension Ladder w/stay poles.	$2,274
7800-0050	Duo-Safety 525-C 40' 3 Section Extension Truss Ladder without stay poles.	$2,235
7800-0051	Duo-Safety 20' 875-A Roof Ladder	$534
7800-0052	Duo-Safety 18' 875-A Roof Ladder	$479
7800-0053	Alco-Lite AEL-14 Attic Extension Ladder	$557
7800-0054	Alco-Lite TEL-40 Extension Ladder	$2,025
7800-0055	Alco-Lite PEL3-40 Extension Ladder w/o stay poles.	$1,915
7800-0056	Alco-Lite TEL-35 Extension Ladder	$1,741
7800-0057	Alco-Lite TEL-28 Extension Ladder	$1,381
7800-0058	Alco-Lite TEL-40P Extension Ladder with Staypoles.	$2,363
7800-0059	Alco-Lite TEL-50P Extension Ladder with Staypoles.	$2,802
7800-0060	Alco-Lite TEL3-50P Extension Ladder w/Stay Poles	$3,263
7800-0061	Alco-Lite PRL-8 Roof Ladder.	$341
7800-0062	Alco-Lite PRL-10 Roof Ladder.	$346
7800-0064	Duo-Safety 1525-A 40' 3 Section Extension Ladder without stay poles.	$1,858
7800-0067	Duo-Safety 10' 775-A Roof Ladder	$330
7800-0068	14' Fresno Duo-Safety ladder, model 701	$632
7800-0069	Alco-Lite PEL3-35P Extension Ladder w/Stay Poles.	$1,517
7800-0070	Alco-Lite PEL3-30 3 Section Extension Ladder	$1,215
7800-0071	Duo-Safety 20' 875-A Roof Ladder with mud guard attached.	$534
7800-0072	Duo-Safety 1200-A 28' 2 Section Extension Ladder with mud guard attached.	$1,116
7800-0073	Duo-Safety 1200-A 35' 2 Section Extension Ladder with mud guard attached.	$1,390
7800-0074	Duo-Safety 3-section 16' extension ladder, Wildland	$784
7800-0075	Duo Safety 3 Section 20' Extension Ladder, Wildland	$918
7800-0076	Duo-Safety 1200-A 35' 2 Section Extension Ladder. Special custom length ladder 1" shorter than standard in closed position.	$1,345
7800-0077	Duo-Safety 925-A 22' 3 Section Extension Ladder	$950
7800-0078	Alco-Lite FL-10, 10' folding ladder without shoes and handles.	$233
7800-0079	Duo-Safety 1200-A 28' 2 Section Extension Ladder, special width 22" wide.	$1,193
7800-0080	Aluminum Cast Bracket for Alcolite Folding Ladder - For 8' or 10'	$387
7900-0014	DOT Required Drive Away Kit - Kit includes three (3) triangular warning reflectors with carrying case. This kit is for the end user and is to remain with the truck.	$26
7900-0046	Goodyear front spare tire assembly with aluminum wheel to match front tire / wheel specification.	$1,845
7900-0047	Goodyear rear spare tire assembly with aluminum wheel to match rear tire / wheel specification.	$1,596
7900-0048	Michelin front spare tire assembly with aluminum wheel to match front tire / wheel specification.	$1,673
7900-0049	Michelin rear spare tire assembly with aluminum wheel to match rear tire / wheel specification.	$1,495
7900-0050	Goodyear front spare tire assembly with steel wheel to match front tire specification.	$1,336
7900-0051	Goodyear rear spare tire assembly with steel wheel to match rear tire specification.	$1,079
7900-0052	Michelin front spare tire assembly with steel wheel to match front tire specification.	$1,262
7900-0053	Michelin rear spare tire assembly with steel wheel to match rear tire specification.	$966

7900-0156	Multiplex adapter kit. Includes 6' harness with 9 pin plug/Deutsch ends and a USB to CAN interface module.	$270
7900-0218	Wheel chocks 44" NFPA complaint, pair (PR) of Zico SAC-44. Up to 44" diameter tires.	$546
7900-0228	V-MUX Electrical system diagnostic kit.	$779
8000	**Paint & Lettering**	
8100-0001	Paint end of fly section high visibility orange. Includes nozzle guard (if equipped).	$418
8100-0065	Paint chassis frame rails, springs, cross-members, fire pump, drivelines, fuel and air tanks, axles front bumper extensions with brackets and front suction piping (if applicable) shall be painted: [#COL].	$1,710
8100-0070	Paint valve ends job color.	$435
8100-0071	Undercoating E-ONE.	$266
8100-0072	Touch up paint, (1) pint. Dupont paint job color.	$84
8100-0084	All applicable pump/pre-connect application modules are to have a job color finish. Includes upper and lower pump modules, crosswalk module and/or speedlay/pre-connect module (as applicable). Rear mounted body/pump module to be painted job color.	$555
8100-0085	Paint end of fly section job color. Includes nozzle guard (if equipped).	$418
8100-0088	Painted trim stripe on chassis wheels (per axle). Color to be: [#COL].	$161
8100-0096	Paint rear tow eye assemblies job color IPO black.	$252
8100-0097	Paint the pump job color.	$531
8100-0100	Special paint break. See sketch / drawing / photo in sales file.	$175
8100-0108	Front wheels to be painted on the inboard side (same color as outboard side).	$286
8100-0109	Rear wheels (4) to be painted on the inboard side (same color as outboard side). Includes outboard side of the inboard wheels.	$571
8100-0115	Paint valve ends 767681EG Black.	$435
8100-0117	Paint cab/body with approved metallic paint color.	$2,516
8100-0165	Paint lift cylinders, extension cylinders and upper turntable steelwork job color (does not apply to TT deck). If cab is two-tone, color to match upper cab.	$492
8100-0166	Painted stripe - 12" wide and straight on front, sides and rear of cab and body. Color: [#COL]. Location: [#LOC].	$4,097
8100-0170	Painted Stripe - 6" wide with "Z". Stripe straight on front, sides and rear of cab and body. "Z" location to be specified by customer. Color: [#COL]. Location: [#LOC].	$4,097
8100-0172	Paint body two tone color. Paint break will be just above door drip rail. DuPont paint. Color: [#COL].	$1,765
8100-0176	Paint E-ONE chassis cab - Sikkens paint. Color: [#COL].	$5,094
8100-0177	Paint cab Sikkens two-tone. Upper area of cab to be painted [#COL].	$1,147
8100-0181	Paint body two-tone color - Sikkens paint: Color: [#COL].	$1,765
8100-0183	Paint Body - Large - For Aerials, T/A Tankers/Wetsides, Rear Mounts and Rescues. Sikkens paint. Color: [#COL].	$3,882
8100-0185	Paint body stainless steel - Large. Sikkens paint. Color: [#COL].	$7,084
8100-0188	Durabak coating for all cab and body handrails.	$1,304
8100-0225	Paint the pump. Color: [#COL].	$531
8100-0226	Medical cabinet exterior roll-up door two-tone paint adjustment (EA). Includes dis-assembly/re-assembly of existing two-tone roll-up door to match cab paint break.	$423
8100-0230	Painted stripe - 10" wide hockey stripe, straight across front and may contour as it transitions from Cab to Body on each side. Color: [#COL]. Location: [#LOC].	$5,119
8100-0361	Rear body surface to have a painted job color finish. Includes hinged doors that do not have discrete sales codes and removable panels.	$791
8100-0362	Paint body two tone color. Paint break will be just above the body compartment top. Sikkens paint. Color: [#COL].	$1,765
8100-0363	Breathing air bottle(s) to be painted non-standard color IPOS yellow. Color: [#COL].	$104
8100-0372	Paint cab two-tone with approved metallic flake paint color.	$629
8100-0373	Front cab grille mesh painted FLNA4001 white with [#COL] painted letters. Sales to provide detail of letters to provide.	$548
8100-0375	LizardSkin under cab insulation. Includes all exterior under cab surfaces exposed to interior crew compartment.	$2,904
8100-0383	Paint Newton Dump job color.	$472
8100-0385	Outline for painted letter on cab grille (EA) - 18". CIIX cabs only. Color: [#COL].	$116
8100-0386	FRP painted exterior panels IPO standard paint process for stainless steel bodies. Available only on stainless steel aerial bodies that have rollup doors. Provides a credit versus the standard painting process. Sikkens paint. Color [#COL].	-$5,693
8100-0387	Chassis frame and component undercoating prior to body load.	$694
8100-0388	Chassis fuel tank to have undercoating applied prior to installation on frame.	$185
8100-0389	Standard paint process for the exterior of large stainless steel bodies. Sikkens paint. Color: [#COL].	$3,882
8100-0394	Paint body two-tone color. Paint break will be just above the body compartment opening. Sikkens paint. Color: [#COL].	$1,765

8100-0395	Pinned waterway reel to be painted job color. Note: Since reel is painted as a complete unit, it will not be covered under the 10 year paint warranty.	$501
8100-0398	Paint swivel chute job color.	$587
8100-0401	Paint front and rear axle hubs primary job color.	$1,205
8100-0403	Black Durabak coating on fuel tank.	$377
8100-0407	Striping shall be painted as laid out and defined by customer. Refer to specific instruction, sketches and dimensions within the shop order file.	$7,154
8100-0410	Black Durabak coating on pump master drain bracket.	$43
8100-0412	Zolatone finish gray in color for the upper pump module on the officer side where the E-ONE logo is mounted.	$169
8100-0413	Front cab grille mesh painted FLNA4006 white with [#COL] painted letters. Sales to provide detail of letters to provide.	$548
8100-0416	Front cab grille mesh painted with the waving United States flag.	$1,402
8100-0421	Paint air conditioning condenser color: [#COL].	$718
8100-0422	Monitor painted [#COL].	$376
8100-0424	Front cab grille mesh painted with the waving Maryland flag.	$1,402
8100-0425	Rear ladder tunnel doors upgraded to be painted rather than sanded. Color shall be: [#COL]. Applicable rear body Chevron package shall not be applied on painted door surfaces.	$161
8150-0008	Zolatone for Removable Toolboard.	$69
8200-0000	Scotchlite Letter (Each) - 3". Color [#COL].	$7
8200-0001	Scotchlite Letter (Each) - 6". Color [#COL].	$9
8200-0002	Scotchlite Letter (Each) - 9". Color [#COL].	$10
8200-0003	Scotchlite Letter (Each) - 12". Color [#COL].	$10
8200-0004	Scotchlite Letter (Each) - 15". Color [#COL].	$12
8200-0005	Scotchlite Letter (Each) - 18". Color [#COL].	$14
8200-0006	Maltese cross 12" (Pair).	$1,028
8200-0007	Sign Gold Letter (Each) - 3"	$11
8200-0008	Sign Gold Letter (Each) - 6"	$17
8200-0009	Sign Gold Letter (Each) - 9"	$26
8200-0010	Sign Gold Letter (Each) - 12"	$26
8200-0011	Scotchlite Letters (60) - 3". Color [#COL].	$693
8200-0012	Sign Gold Letters (60) - 3".	$1,008
8200-0013	Shade for lettering.	$3
8200-0014	Sign "Stay Back 500FT" with black reflective lettering. Locate below rear of body.	$121
8200-0015	White reflective tape on (2) outriggers.	$198
8200-0016	White reflective tape on (4) outriggers.	$392
8200-0018	Scotchlite Letters (90) - 3". Color [#COL].	$865
8200-0019	Scotchlite Letters (120) - 3". Color [#COL].	$1,036
8200-0020	Sign Gold Letters (90) - 3".	$1,341
8200-0021	Sign Gold Letters (120) - 3".	$1,671
8200-0022	Shade and outline for lettering.	$4
8200-0024	Reflexite Letter (Each) - 18". [#COL] Reflexite letter(s) stitched to vinyl hosebed cover end flap.	$60
8200-0026	Die cut letter in stripe (EA).	$22
8200-0027	Scotchlite Letter (Each) - 5". Color [#COL].	$9
8200-0028	Sign Gold Letter (Each) - 5"	$17
8200-0029	Scotchlite Letter (Each) - 10". Color [#COL].	$11
8200-0030	Sign Gold Letter (Each) - 10"	$26
8200-0031	Scotchlite Letter (Each) - 30". Color [#COL].	$18
8200-0032	Scotchlite letter each 24" [#COL].	$16
8200-0033	Scotchlite letter (each) - 8". Color [#COL].	$11
8200-0036	Scotchlite Letter (Each) - 4". Color [#COL].	$8
8200-0038	Reflexite Letter (Each) - 12". [#COL] Reflexite letter(s) stitched to vinyl hose bed cover end flap.	$47
8200-0039	Maltese Cross SignGold up to 18" dia (PR) with new layout.	$927
8200-0040	Gold leaf letters (90) - 3".	$3,348
8200-0041	O.W.L. lettering and striping tower package. See photos on file for custom package details.	$8,292
8200-0045	Gold leaf letters (120) - 3".	$3,897
8200-0046	Scotchlite Letter (Each) - 27". Color [#COL].	$17
8200-0047	Sign Gold Letter (Each) - 4"	$13
8200-0048	Sign Gold Letters (120) - 4".	$2,056
8200-0052	Sign Gold Letter (Each) - 8"	$26
8200-0061	Scotchlite Letter (Each) - 2". Color [#COL].	$6
8200-0068	Painted letter on cab grille (EA) - 18". CIIX cabs only. Color: [#COL].	$116
8200-0070	Scotchlite Letter (Each) - 1.25". Color Black. To read: VIST OUR WEB SITE AT: WWW.PALMHARBORFD.COM	$5
8200-0073	Sign Gold Letter (Each) - 3". Sign Gold to be small turn style.	$14
8200-0074	Maltese Cross SignGold up to 15" dia (PR) with new layout.	$746

8200-0075	Reflexite Letter (Each) - 10". [#COL] Reflexite letter(s) stitched to vinyl hose bed cover end flap.	$43
8200-0076	Sign Gold 2" Lettering IPO standard on breathing air bottle that's mounted to side of aerial base section.	$275
8200-0081	Etched Vinyl Letter (Each) - 5"	$17
8200-0084	Scotchlite Letter (Each) - 1". Color [#COL].	$6
8200-0086	Sign Gold Letter (Each) - 16".	$32
8200-0087	Sign Gold 2" Lettering with a red outline IPO standard on breathing air bottle that's mounted to side of aerial base section.	$275
8200-0088	Gold leaf letter (Each) - 4".	$61
8200-0089	Gold leaf letters (EA) - 3".	$37
8300-0002	NFPA Scotchlite Stripe - 4" wide and straight on front/sides of cab and sides/rear of body. Color: [#COL]. Location: [#LOC].	$661
8300-0003	NFPA Scotchlite Stripe - 6" wide and straight on front/sides of cab and sides/rear of body. Color: [#COL]. Location: [#LOC].	$669
8300-0006	NFPA Scotchlite Stripe - 6" wide with "Z". Stripe straight on front, sides and rear of cab and body. "Z" location to be specified by customer. Color: [#COL]. Location: [#LOC].	$1,058
8300-0008	NFPA Scotchlite Stripe - 5" wide with "S". Stripe straight on front, sides and rear of cab and body. "S" location to be specified by customer. Color: [#COL]. Location: [#LOC].	$1,181
8300-0009	NFPA Scotchlite Stripe - 5" wide with double "S". Stripe straight on front, sides and rear of cab and body. Double "S" locations to be specified by customer. Color: [#COL]. Location: [#LOC].	$1,446
8300-0011	Scotchlite stripe (PR) 1/2" located 1/2" above and below existing stripe. Color: [#COL].	$493
8300-0012	Scotchlite stripes (4) 1/2" located (2) above and (2) below existing stripe. Stripes to be spaced 1/2" apart. Color: [#COL].	$979
8300-0013	NFPA Scotchlite Stripe - 2" and 4" wide with "Z". Stripe straight on front, sides and rear of cab and body. "Z" location to be specified by customer. 2" above 4" with 1" gap between stripes. Color: [#COL]. Location: [#LOC].	$1,495
8300-0016	Paint Break Sign Gold Chassis Stripe - 3/4" Wide - Black, Gold, Black. To be located above existing paint break.	$344
8300-0017	Paint Break Sign Gold Body Stripe - 3/4" Wide - Black, Gold, Black. To be located above existing paint break.	$538
8300-0018	Sign gold scroll for body door with shade (Ea). Location: [#LOC]	$162
8300-0019	Sign gold scroll for body door (Ea). Location: [#LOC]	$52
8300-0024	Red/White rubrail scotchlite insert.	$191
8300-0025	1/4" Pin stripe above and below existing Scotchlite stripe. Color: [#COL].	$790
8300-0026	Scotchlite stripe 1" located 1" above and below existing stripe. Color: [#COL].	$590
8300-0027	NFPA Scotchlite 4" wide hockey stripe, straight across front and may contour as it transitions from cab to body on each side. Color: [#COL]. Location: [#LOC].	$795
8300-0028	NFPA Scotchlite 6" wide hockey stripe, straight across front and may contour as it transitions from Cab to Body on each side. Color: [#COL]. Location: [#LOC].	$803
8300-0030	NFPA Scotchlite 10" wide hockey stripe, straight across front and may contour as it transitions from Cab to Body on each side. Color: [#COL]. Location: [#LOC].	$1,073
8300-0032	Chevron "A" style 4" Scotchlite striping on rear of body. Includes rear facing extrusions, panels and doors inboard/outboard of the beavertails(if applicable). Colors to be [#COL].	$3,128
8300-0033	NFPA Scotchlite Stripe - 8" wide and straight on front/sides of cab and sides/rear of body. Color: [#COL]. Location: [#LOC].	$827
8300-0034	Scotchlite stripe 2" located 1" above existing stripe. Color: [#COL].	$374
8300-0036	NFPA Scotchlite Stripe - 8" wide with "S". Stripe straight on front, sides and rear of cab and body. "S" location to be specified by customer. Color: [#COL]. Location: [#LOC].	$1,343
8300-0037	Chevron "V" style 4" Scotchlite striping on rear of body. Includes rear facing extrusions, panels and doors inboard/outboard of the beavertails(if applicable). Colors to be [#COL].	$3,128
8300-0038	Scotchlite stripe 2" located 1" above and below existing stripe. Color: [#COL].	$748
8300-0039	Scotchlite stripe 1" located .5" above and below existing stripe. Color: [#COL].	$623
8300-0044	Scotchlite stripe 1" located 1" above existing stripe. Color: [#COL].	$312
8300-0045	1/4" pinstripe. Color: [#COL]. Location: At cab paint break	$173
8300-0046	Scotchlite stripe (PR) 1/2" located directly above and below existing stripe. Color: [#COL].	$618
8300-0048	Paint break Scotchlite chassis stripe - 3/4" Wide - Black, [#COL], Black. To be located above existing paint break.	$602
8300-0050	Scotchlite stripe (PR) 1" located directly above and below existing stripe on satin roll-up doors only. Color: [#COL].	$493
8300-0052	Chevron "V" style Scotchlite striping on rear of body outboard of beavertails (if equipped). Colors to be [#COL].	$927
8300-0054	[#COL] 3/4" razor blade stripe for sign plates	$509
8300-0056	Chevron "A" style 4" individual Scotchlite striping on front bumper. Colors to be [#COL].	$1,292
8300-0057	Arched stripe 6"/2" on front cab door and blend into a straight body stripe. Includes stripe on front bumper. Color: [#COL]	$2,148

8300-0058	Chevron "V" style 4" Scotchlite striping on rear B1 compt door, (3) stripes. Colors to be red/white/black pinstripe.	$810
8300-0060	Scotchlite Stripe - 5" wide straight on front front of cab below windshield end at radius corners. Color: [#COL].	$219
8300-0061	Chevron "A" style 6" individual Scotchlite striping on rear of body. Includes rear facing extrusions, panels and doors inboard/outboard of the beavertails(if applicable). Colors to be [#COL].	$1,650
8300-0062	Chevron "A" style Scotchlite striping on rear of body outboard of beavertails (if equipped). Colors to be [#COL].	$927
8300-0065	Paint break scotchlite chassis stripe - 3/4" Wide - White, [#COL], White. To be located above existing paint break.	$602
8300-0066	NFPA Scotchlite Stripe - 4" wide with "Z". Stripe straight on front, sides and rear of cab and body. "Z" location to be specified by customer. Color: [#COL]. Location: [#LOC].	$1,050
8300-0069	6" [#COL] scotchlite stripe around perimeter of plaform. Includes 1/2" black trim on top and bottom of stripe.	$459
8300-0071	Paint break Scotchlite chassis stripe - 3/4" Wide - [#COL]. To be located above existing paint break.	$602
8300-0072	NFPA Scotchlite Stripe - 10" wide with "Z". Stripe straight on front, sides and rear of cab and body. "Z" location to be specified by customer. Color: [#COL]. Location: [#LOC].	$1,809
8300-0076	Chevron "A" style 4" Scotchlite striping on rear of body between beavertails; body panels and extrusions only (No doors). Colors to be [#COL].	$995
8300-0078	Chevron "A" style 4" 3M "Diamond Grade" striping on rear of body. Includes rear facing extrusions, panels and doors inboard/outboard of the beavertails(if applicable). Colors to be [#COL].	$3,910
8300-0079	Chevron "A" style 4" 3M "Diamond Grade" striping on rear pump panel/bleeder panel(s). Colors to be [#COL].	$653
8300-0080	Chevron "A" style 4" 3M "Diamond Grade" striping on front bumper. Colors to be [#COL].	$1,614
8300-0081	Chevron "A" style 3M "Diamond Grade" striping on rear of body outboard of beavertails (if equipped). Colors to be [#COL].	$1,160
8300-0082	[#COL] Scotchlite on nozzle guard.	$330
8300-0083	[#COL] Scotchlite on end of fly section	$512
8300-0084	Chevron "A" style 6" printed sheet Scotchlite striping on rear of body. Includes rear facing extrusions, panels and doors inboard/outboard of the beavertails (if applicable). Colors to be [#COL].	$1,287
8300-0085	Scotchlite stripe 1" located directly above and below existing stripe. Color: [#COL].	$590
8300-0086	Scotchlite 6" wide cab hockey stripe. Hockey located on front cab doors up to top of cab. Color: White.	$481
8300-0090	Scotchlite stripe 1.5" located directly above and below existing stripe. Color: [#COL].	$625
8300-0091	1/4" Scotchlite pinstripe above and below existing stripe. Color: [#COL].	$901
8300-0092	NFPA Scotchlite custom double hockey stripe. Includes white 6" stripe with 10" angle (hockey) stripes and gold accent stripes on white stripe with black outline. Top of stripe even with bottom of quad bezel, hockey on rear of front cab doors and hockey on L2/R2. See additional photos on file with sales.	$3,788
8300-0093	Chevron "A" style 6" printed sheet Scotchlite striping on front bumper. Colors to be [#COL].	$530
8300-0094	Chevron "A" style 4" Scotchlite striping on rear body panels only, no extrusions. Colors to be [#COL].	$2,346
8300-0096	Reflective tape on two outriggers. Individual striping to alternate in an "A" pattern when viewed from the front or rear of the truck. Colors to be: [#COL].	$540
8300-0099	Chevron "A" style 6" printed sheet Scotchlite striping on rear of body between beavertails. Colors to be [#COL].	$1,013
8300-0100	Chevron "V" style 4" Scotchlite striping on rear ladder tunnel door(s) only. Colors to be [#COL].	$802
8300-0104	Chevron "V" style 3" Scotchlite striping on rear of body. Colors to be Red/White/Blue.	$3,128
8300-0109	Chevron "A" style 6" 3M "Diamond Grade" striping on rear of body. Includes rear facing extrusions, panels and doors inboard/outboard of the beavertails(if applicable). Colors to be [#COL].	$3,910
8300-0111	Chevron "A" style 6" individual Scotchlite striping on rear of body except for the pump/ladder tunnel access door. Colors to be [#COL].	$3,128
8300-0112	Chevron "A" style 6" Scotchlite striping on rear facing side of the slide out room. Colors to be [#COL].	$1,565
8300-0119	Yellow reflective tape on 2 outriggers.	$198
8300-0120	Chevron "A" style 6" 3M "Diamond Grade" striping on front bumper. Colors to be [#COL].	$1,614
8300-0121	Blue reflective tape on 2 outriggers.	$198
8300-0122	Signgold body scroll package. (1) each upper corner L1, L2, L3, L6, L7, R1, R2, R3, R6, R7 and (1) each upper corner L4, L5, R4, R5 with connecting 3/4" signgold stripe. See photos on file with sales.	$5,288
8300-0125	Reflective [#COL] striping positioned in the "A" formation located in the lower door panel (EA). Location: [#LOC].	$64

8300-0138	Reflective tape on four outriggers. Striping to alternate in an "A" pattern when viewed from the front or rear of the truck. Colors to be: [#COL].	$1,079
8300-0142	Chevron "A" style 6" individual Scotchlite striping on front bumper. Colors to be [#COL].	$662
8300-0143	NFPA Scotchlite Stripe - three stripes 3" wide with "Z" with 1" gap between stripes. Stripe straight on front, sides and rear of cab and body. "Z" location to be specified by customer. Color: top stripe - Yellow, middle stripe - White, bottom stripe - Black. Location: top of bottom stripe flush with top of bumper and straight back.	$3,078
8300-0144	Chevron "A" style 6" 3M "Diamond Grade" striping on rear of body (does not include the B1 door). Includes rear facing extrusions, panels and doors inboard/outboard of the beavertails(if applicable). Colors to be [#COL].	$1,643
8300-0145	Chevron "A" style 6" 3M "Diamond Grade" striping on front bumper. Colors to be [#COL].	$785
8300-0146	Chevron "A" style 6" 3M "Diamond Grade" striping on rear of body. Includes rear facing extrusions, panels and doors inboard/outboard of the beavertails (if applicable). Colors to be [#COL].	$2,168
8300-0148	Sign gold scroll (4 ea side) for body with connecting .75" sign gold body stripe and white painted pin stripe.	$2,756
8300-0150	Chevron "A" style 6" printed sheet Scotchlite striping on rear of body. Includes rear facing extrusions, panels and doors inboard/outboard of the beavertails (if applicable). Colors to be [#COL].	$1,120
8300-0155	NFPA Scotchlite Stripe - 4" wide with ribbon style "Z". Stripe straight on front, sides and rear of cab and body. "Z" location to be specified by customer. Color: [#COL]. Location: [#LOC].	$1,058
8300-0156	Sign gold scroll (20) for body doors with connecting .5" sign gold stripe.	$1,236
8300-0159	Red/Yellow scotchlite. Locate on front of roll-out tray(s), front lip of adjustable/fixed shelves and tool board(s) on outer vertical edge on both sides.	$385
8300-0162	Scotchlite stripe 1" located 1" below existing stripe. Color: [#COL].	$312
8300-0179	Chevron "A" style 6" printed sheet Scotchlite striping on rear of body. Includes rear facing extrusions, panels, inboard/outboard of the beavertails (if applicable). Does not include the rear door(s). Colors to be Yellow/Red.	$1,063
8300-0180	Sign gold scroll (4 ea side) for body with connecting .75" sign gold body stripe and white scotchlite pin stripe.	$1,848
8300-0181	Paint Break Sign Gold Chassis Stripe - 3/4" Wide - Black, Gold, Black. Sign Gold to be small turn style. To be located above existing paint break.	$464
8300-0186	NFPA Scotchlite Stripe - 2" and 6" wide with "Z". Stripe straight on front, sides and rear of cab and body. "Z" location to be specified by customer. 2" above 6" with 1" gap between stripes. 6" stripe to have a .25" outline above and below. Color: [#COL]. Location: [#LOC].	$1,495
8300-0189	Scotchlite striping on front bumper 6". Color to be [#COL].	$662
8300-0190	Chevron "A" style 6" 3M "Diamond Grade" striping on rear of body (does not include the B1 door). Includes rear facing extrusions, panels and doors inboard/outboard of the beavertails(if applicable). Colors to be [#COL].	$1,643
8300-0191	Paint break Scotchlite chassis stripe - 1/4" Wide - [#COL]. To be located above existing paint break.	$431
8300-0192	NFPA Scotchlite Stripe - 8" and 3" wide with "Z". Stripe straight on front, sides and rear of cab and body. "Z" location to be specified by customer. 8" above 3" with 1.5" gap between stripes. Color: White. Location: center of stripe centered with headlight bezel and straight back.	$1,965
8300-0193	Chevron "A" style 3M "Diamond Grade" Dots in 6" striping pattern on rear of body (does not include the B1 door). Includes rear facing extrusions, panels and doors inboard of the beavertails (if applicable). Colors to be [#COL].	$2,449
8300-0194	Install dealer supplied Scotchlite pinstripe above and below existing stripe. Color: Blue.	$483
8300-0197	Scotchlite stripe 1" located 1" down from top of stripe and 1" up from bottom of stripe (1"stripes on existing stripe). Color: [#COL].	$623
8300-0198	NFPA Scotchlite Stripe - 8" wide with "Z". Stripe straight on front, sides and rear of cab and body. "Z" location to be specified by customer. Color: [#COL]. Location: [#LOC].	$1,965
8300-0200	Scotchlite stripe 2" located 2" below existing stripe. Color: [#COL].	$737
8300-0204	Chevron "A" style 6" 3M "Diamond Grade" striping on (4) outriggers. Colors to be [#COL].	$1,089
8300-0205	NFPA Scotchlite Stripe - 4" wide with double ribbon. Double ribbon locations to be specified by customer. Color: [#COL]. Location: [#LOC].	$1,446
8300-0207	Chevron "A" style 6" individual Scotchlite striping for sign plate at rear turntable handrails. Colors to be [#COL].	$331
8300-0208	Chevron "A" style 6" Scotchlite striping on bottom of platform oriented with base of chevron to hinged side. Colors to be Red/Yellow.	$792
8300-0210	There will be reflective tape added to the front and both sides of all roll-out trays to aid in visibility. Tape will be [#COL] in color.	$984
8300-0214	Chevron "A" style 6" printed sheet Scotchlite striping stitched to vinyl hosebed cover end flap. Colors to be [#COL].	$398
8300-0215	Gold reflective tape on 2 outriggers.	$198

8300-0216	Scotchlite 3" wide hockey stripe, straight across front and may contour as it transitions from cab to body on each side. Color: [#COL]. Location: [#LOC].	$795
8300-0217	NFPA Scotchlite Stripe - 1" and 6" wide with "Z". Stripe straight on front, sides and rear of cab and body. "Z" location to be specified by customer. 1" above 6" with 1" gap between stripes. 6" stripe to have a .25" outline above and below. Color: [#COL]. Location: [#LOC].	$1,495
8300-0220	Paint Break Sign Gold Chassis Stripe - 1" Wide - Black pin stripe, Sign Gold, Black pin stripe. To be located above existing paint break if so equipped or at the same approximate position (when there is not a paint break).	$618
8300-0221	Sign gold scroll (Ea). Scroll detail/definition shall be defined by sales administration and or shop order file. Location: [#LOC]	$52
8300-0222	NFPA Scotchlite Stripe - 1", 4" and 1" wide with "Z". Stripe straight on front, sides and rear of cab and body. "Z" location to be specified by customer. 1" above and below 4" with 1" gap between stripes. Color: [#COL]. Location: [#LOC].	$1,495
8300-0223	NFPA Scotchlite Stripe - 6" wide with double pin stripe top and bottom. "Z" Stripe straight on front, sides and rear of cab and body. "Z" location to be specified by customer. Stripe shall be a printed sheet laid out from top to bottom as 1/4" pin stripe, 1/8" gap (wide stripe color), 1/8" pin stripe, 6" wide stripe, 1/8" pin stripe, 1/8" gap (wide stripe color), 1/4" pin stripe. Color: [#COL]. Location: [#LOC].	$1,495
8300-0224	Paint break Scotchlite chassis stripe - 1/2" Wide - [#COL]. To be located above existing paint break.	$493
8300-0225	Paint break Scotchlite body stripe - 1/2" Wide - [#COL]. To be located above existing paint break.	$701
8300-0226	Sign Gold Stripe - 3/4" Wide aerial sign plate - Gold with red pin stripe outline. The striping shall create a border around sign plate lettering.	$1,043
8300-0227	Diamond Grade reflective tape on (2) outriggers. Striping to alternate in an "A" pattern when viewed from the front or rear of the truck. Colors to be: [#COL].	$548
8300-0228	Printed reflective striping on (2) outriggers. Striping to alternate in an "A" pattern when viewed from the front or rear of the truck. Colors to be: [#COL].	$283
8300-0229	Scotchlite stripe 3" located 2" below existing stripe. Color: [#COL].	$778
8300-0230	Paint break painted on chassis stripe - 1/8" Wide - [#COL].To be located above existing paint break if so equipped or at the same approximate position (when there is not a paint break).	$1,049
8300-0232	NFPA Scotchlite Stripe - 2" and 4" wide with interlocking "Z". Stripe straight on front, sides and rear of cab and body. "Z" location to be specified by customer. 2" above 4" with 1" gap between stripes. Color: [#COL]. Location: [#LOC].	$1,495
8300-0233	NFPA Scotchlite Stripe - 1", 4" and 1" wide with triple interlocking "Z". Stripe straight on front, sides and rear of cab and body. "Z" location to be specified by customer. 2" above 4" with 1" gap between stripes. Color: [#COL]. Location: [#LOC].	$2,187
8300-0234	NFPA Scotchlite Stripe - 2" wide with "Heartbeat". Stripe straight on front, sides and rear of cab and body. "heartbeat" location to be specified by customer. Color: [#COL]. Location: [#LOC].	$1,050
8400-0000	Vision flags on canopy windows (PR).	$498
8400-0004	Install customer supplied logos on front cab doors.	$180
8400-0005	A pair of customer logos for cab supplied to E-One in a digital format.	$811
8400-0008	Star of life logo 12". Location: [#LOC].	$90
8400-0009	American Flag (EA). Approx size: 7"H x 14"W. Location: [#LOC]	$103
8400-0010	Install customer logo from an existing E-ONE design (EA). Location: [#LOC]	$111
8400-0011	Vision flag on officer canopy window.	$250
8400-0012	Star of life logo 22.5". Location: [#LOC]	$179
8400-0013	Signgold Fleur de Lis 5" logo (PR) with black outline. Location: [#LOC].	$179
8400-0015	Install customer supplied logos on rear cab doors.	$180
8400-0017	A customer logo supplied to E-One in a digital format. Location: [#LOC].	$274
8400-0018	Star of life logo 20". Location: (1) each side centered on capony window.	$301
8400-0021	Label "NO SMOKING" with universal symbol 2"x6"; white background with red letters. Location: [#LOC].	$34
8400-0023	Install customer supplied logo. Location: [#LOC].	$62
8400-0024	Install up to 12" SignGold customer logo from an existing E-ONE design (EA). Location: [#LOC].	$166
8400-0025	A customer SignGold logo (up to 12") supplied to E-One in a digital format. Location: [#LOC].	$350
8400-0029	Reflective American Flag (PR) - wavy. Approx size: 12"H x 18"W. Location: [#LOC].	$206
8400-0033	Logo E-ONE (PR) on aerial lift cylinder. Logo to be sign gold material approx 14" long located midway along outward surface of cylinder.	$74
8400-0034	Vision flags (Canadian ribbon style) on canopy windows (PR).	$498
8400-0036	Star of life logo 20" (PR). Location: (1) each side centered between cab doors.	$301
8400-0037	Vision flags (state of Texas ribbon style) on canopy windows (PR).	$498
9000	**Delivery / Warranty / Service**	
9300-0002	Aerial training manual (EA).	$30
9300-0003	Compressed air foam system training, Pneumax.	$2,990
9300-0009	Manuals, Operator and Service CD-ROM.	$308
9300-0010	Approval Drawings	$888

9300-0012	Pump panel approval drawings.	$357
9300-0013	Approval Drawings Revised	$178
9300-0017	Manuals Printed (Set).	$804
9300-0018	Manuals, Operator and Service CD-ROM (additional set).	$45
9300-0031	Dash panel layout approval drawings	$464
9300-0035	Customer late change order.	$272
9300-0038	Manuals, operator, service and exploded view parts CD-ROM.	$308
9300-0039	Manuals printed (set) with exploded view parts.	$804
9300-0040	As built electrical drawings.	$2,159
9300-0041	As built plumbing drawings.	$2,698
9300-0044	Transmission programming print-out - provided at delivery.	$104
9300-0045	Manuals Printed (Set). Includes (1) service, (1) parts and (5) operation manuals.	$804
9300-0303	Approval Drawings - Top View of body and pump module section of the vehicle.	$244

Notes:

1) Availability of options are limited by other options selected, and not all options are available in every chassis/apparatus configuration. Selection of an option may require several of the above parts/items to complete the option package.

2) Certain options, alone or in combination with other options, may require heavier axle/suspension packages, longer frames, or reinforced frames at additional cost per the above price list.

3) To configure options, the E-One State Term Schedule authorized dealer will use quote configuration software to select the components necessary to effect the option, feature, or configuration requested and quote the total option price.

Fire Apparatus Quotation for:
STATE OF OHIO TERM SCHEDULE

Quotation Number: 57496 Rev: 6

Unit Description: WMST-COMM

Quote Description: Water Master 2000 Tanker - International 2dr Chassis

Salescode	Extended Description	Qty
Watermaster Tanker Base Model		
0502-0005	A Water Master apparatus being compliant to NFPA 2009 (plumbing as applicable) or ULC (as applicable) to be provided.	1
CHASSIS MODEL		
1005-0165	Chassis Prep International with Maxx Force engine and single rear axle. Includes rear bumper/tow eyes, high idle, master light switch and master battery switch.	1
1005-0475	International 4400 (2) door, 215" WB, front tow hooks, 14K & 26K axles with ESC, Officer side vertical exhaust with pipe guard, ABS brakes, 50 gal driver side fuel tank, (3) 1950 CCA batteries, 320 alternator, ember separator and AC.	1
1200-0117	International Maxx Force 330 HP engine with EVS3000 transmission. Includes Diamond Logix Exhaust Brake.	1
BUMPERS		
1160-0056	OEM chrome front bumper.	1
WHEEL OPTIONS		
1050-0050	International chassis rims painted job color. For use with single rear axle.	1
TIRE OPTIONS		
1060-0055	Tire pressure monitoring valve stem caps. For use with a chassis with 14K front and 26K rear axle.	1
ENGINES & TRANSMISSIONS		
1200-0122	Electronically limited speed to 60 MPH.	1
CHASSIS OPTIONS		
1680-0142	Two (2) hood-mounted air horns with driver and officer mounted foot switches. International.	1
1680-0143	The commercial chassis to have seat belt and chassis pre-wiring for NFPA seating indicator and vehicle data recorder.	1
CAB STEP OPTIONS		

1640-0014	Standard OEM chassis trim package International 4400 or 7400. Includes light mounting bracket.	1
SEATS		
1510-0142	Seating Package Two (2) Door International. Includes One (1) Gra-Mag fixed driver seat and (1) Gra-Mag fixed officer seat.	1
1510-0143	One (1) two person seating capacity tag- driver side area and two (2) seat belt warning tags- one (1) each cab door. For use with International chassis.	1
MISC INTERIOR CAB OPTIONS		
1685-0142	Main control console. Locate in cab centered between driver and officer. Includes NFPA in-cab controls/switching.	1
1685-0143	Cab gauge cluster with english dominant.	1
CAB ELECTRICAL OPTIONS		
1750-0347	Battery charger with indicator, inlet receptacle and air inlet with mounting plate. Locate to driver side of cab below driver door opening.	1
BODY MODEL		
3080-0209	Single axle body with 2000 gallon tank (with auxiliary rear tank fill). Includes driver side forward body access to vacuum pump, compartments L1/R1 with satin roll-up doors with header, driver and officer side compartment top storage areas (driver side includes double hose restraints) and rear body/bumper trim.	1
3080-0214	Anodes for water tank - (3) anodes located in bottom of water tank.	1
COVERS		
3305-0073	Vinyl crosslay cover. Includes mechanical hold-downs on top outer corners and quick release side flap hold downs. Cover color: Red.	1
PUMP MODULE		
3130-0253	Side mount pump module. Includes upper area for double stacked double preconnects.	1
LADDER STORAGE / RACKS		
3365-0150	Manually operated drop down rack on officer body. Secures portable folding tank with capacity of main tank on body.	1
MISC BODY OPTIONS		
3340-0504	E-ONE logo mounted (1) each side on forward body side rearward of water level gauge and (1) rear below the rear tank inlet and offset to driver side. Logos to be sized as applicable to available space.	1
PUMPS		
4005-0072	PTO for use with PM80 vacuum pump and EVS3000 transmission.	1
4005-0075	PTO for use with AP50 pump and EVS3000 transmission.	1
4005-0161	PM80 Vacuum Pump. Includes primary and secondary shut offs, (4) water level gauges- (3) body and (1) cab and the (3) inlets/outlets with switching.	1

PLUMBING KITS		
4410-0053	Plumbing kit with Hale AP50 (with officer side steamer) pump (500GPM). Includes (1) 2.5" Driver Side Discharge with droop and cap, (1) 2.5" Officer Side Discharge with droop and cap and (2) 1.5" Crosslay Discharges. The discharges are to be labeled and color coded in compliance with current NFPA.	1
PUMP OPTIONS		
4015-0093	The optional pump to be NFPA or ULC (as applicable) compliant. Includes primer, pump shift and indicators, (1) 2.5" driver side aux. intake with swing handle and test ports.	1
4015-0168	Engine cooler. For use with International 4400, 7400 and 7500 chassis.	1
PRESSURE GOVERNORS		
4465-0014	FRC In-Control pressure governor. Includes engine and master pump gauges. For use with International MaxxForce engines.	1
GAUGES		
4435-0141	Pump module discharge gauges (4) to be english dominant. For use with AP/MBP pumps.	1
ELECTRICAL SYSTEMS		
5010-0020	Body and cab electrical system.	1
5150-0089	Vehicle data recorder - 2009 NFPA compliant. Includes occupant detection with display. Display location on cab dash near the transmission shifter.	1
LIGHT BARS		
5380-0102	Whelen Justice model JE2NFPA 56" with MKEZ7 mounts. All LED (forward facing) lightbar.	1
WARNING LIGHT PACKAGES		
5550-0118	Whelen LED lower level cab warning light package. Includes light heads wiith bezels located (1) each side of hood area and (1) each side forward facing mounted in grill area.	1
5550-0119	Whelen LED lower level body warning light package. Includes (6) LED light heads located (1) each side forward of the rear wheel well, (1) each side rearward of the rear wheel well and (1) each side on rear of body down low below the taillights (offset outboard).	1
WARNING LIGHTS		
5600-0204	Whelen beacon Model RB6 (PR)- red driver/amber officer. Location: upper rear tank.	1
DOT LIGHTING		
5150-0088	DOT STT/BU lighting. Includes red LED stop/tail/turn and clear incandescent back-up lights. Lights mounted horizontally on the rear of the body	1
LIGHTS - COMPARTMENT, STEP & GROUND		
5380-0108	Cab (WHLN) LED ground lighting package with LED step lighting. Includes (1)	1

	Whelen light per side below the cab lower steps and (1) LED step light below the lower area of the cab for step lighting.		
5380-0109	LED (Whelen) underbody ground lighting. Includes lighting below the forward body and below the rear body.	1	
5380-0110	LED (Whelen) compartment light package. For use in L1 and R1 compartments.	1	
LIGHTS - NON-WARNING			
5400-0122	(7) incandescent scene lighting package. Locate lights - (1) forward area of tank, (2) each side of tank and (2) at rear of tank/body.	1	
CAMERAS / INTERCOM			
5350-0106	Camera system. Includes in-cab mounted monitor and officer side and rear body mounted cameras.	1	
MISC ELECTRICAL			
5110-0049	NFPA cab siren and speaker (WHLN) package. Includes (1) siren with (1) speaker officer side behind bumper cut-out (includes mounting bracket).	1	
HOSE / NOZZLES			
7700-0100	Adaptor, hose and strainer package. For use with vacuum pump system. For use with 2000 thru 4000 gallon tanks only.	1	
7700-0101	Aluminum 6" storz x 5" NH female thread swivel adaptor. For use with AP50 Pump Inlet.	1	
MISC LOOSE EQUIPMENT			
7900-0165	DOT driveaway kit. Includes three (3) triangular reflectors with case.	1	
EXTERIOR PAINT			
8100-0196	Cab paint FLNA 3225 Red. International NAV2893.	1	
STRIPING			
8300-0106	Chevron "A" style 6" Scotchlite striping on rear of tank. Colors to be Yellow/Red.	1	
8300-0107	4" White/Red Scotchlite stripe. Locate white on cab with bottom of stripe even with bottom of cab. The red is to be straight on the body side storage trays.	1	
WARRANTY / STANDARD & EXTENDED			
9100-0039	1 year full warranty.	1	
9100-0043	10 Year stainless steel plumbing warranty.	1	
PRICE	2013 E-ONE WATERMASTER 2000 TANKER - INTERNATIONAL 2DR CHASSIS		$227,513

STATE OF OHIO TERM SCHEDULE

4200 SURFACE RD
COLUMBUS, OH 43228

Quote No: 57496

3/5/2013

Quote Rev:6 Drawing Rev:2

2000 GALLON TANK

500 GPM PUMP

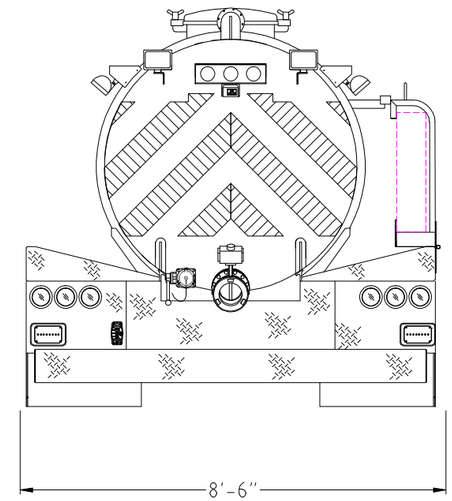

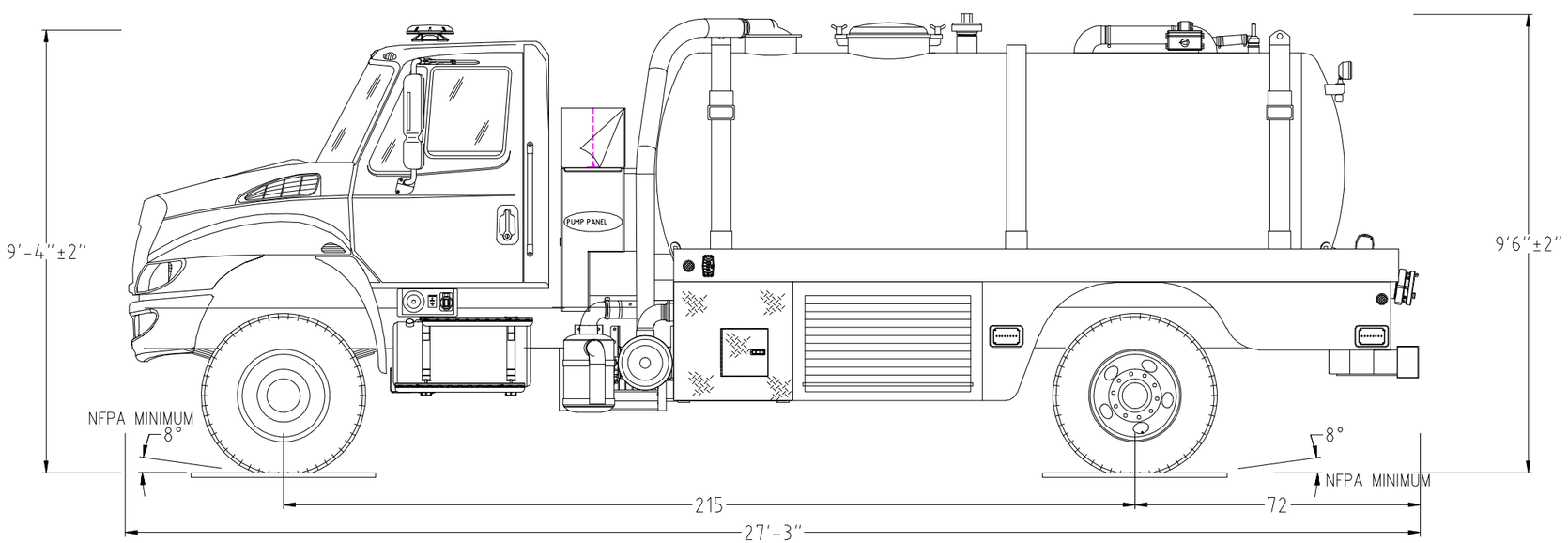

POWERED BY EZDRAW

Notice: This drawing provides a GENERAL REPRESENTATION of the vehicle configuration and should be used for evaluation purposes. The respective dimensions shown,including overall height and length, are estimates and may vary due to manufacturing processes. All other items such as lighting and fixtures, plumbing, compartmentation, and other generally assembled details are shown for REFERENCE ONLY and may not be a direct reflection of the final truck configuration. In ALL situations where this drawing may conflict with the specifications, THE SPECIFICATIONS, AS REFLECTED IN THE APPROVED SHOP ORDER, SHALL PREVAIL. Unless otherwise specified, the proposed apparatus will be manufactured to the latest NFPA recommendations as well as other applicable federally regulated safety regulations. E-One reserves the right to engineer and incorporate design improvements and changes without notice, while adhering to the intent of the specification.

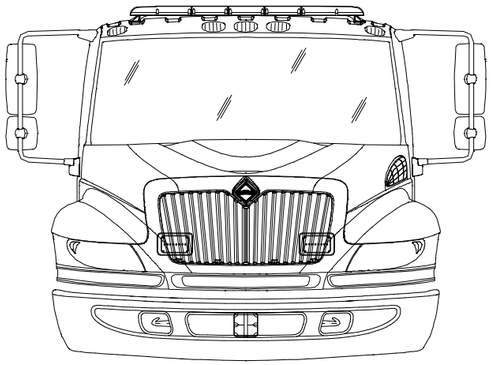

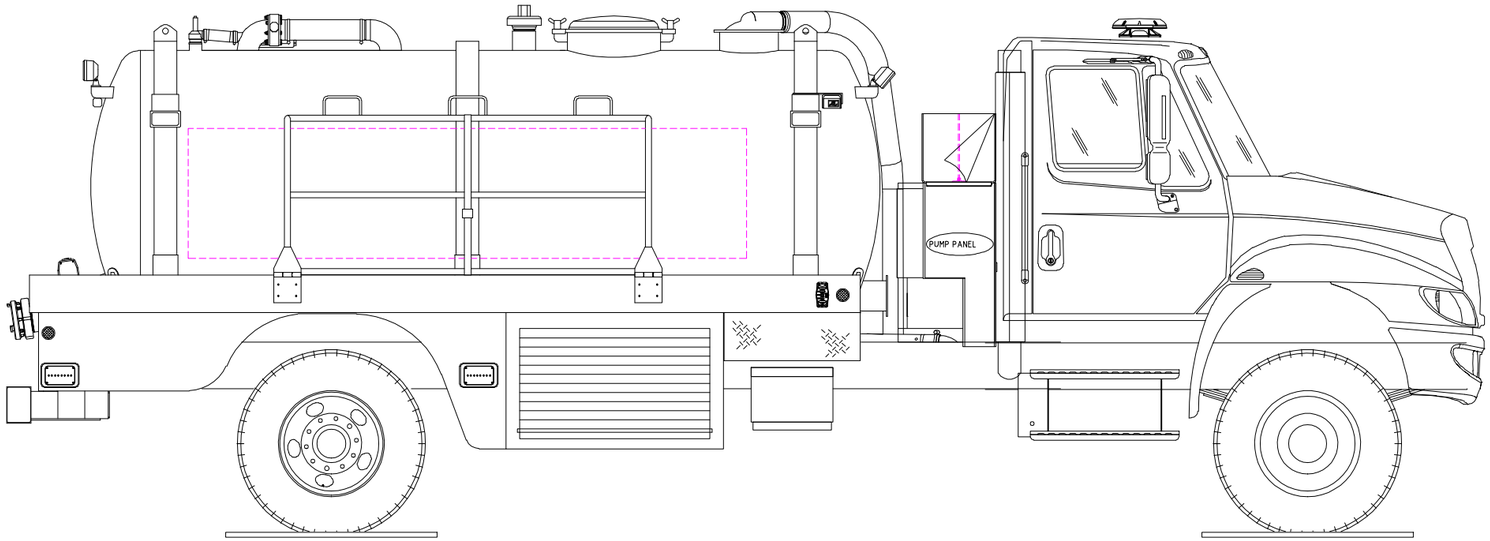

POWERED BY

EZDRAW

Fire Apparatus Quotation for:
STATE OF OHIO TERM SCHEDULE

Quotation Number: 57497 Rev: 6

Unit Description: WMST-COMM

Quote Description: Water Master 3000 Tanker - International 2dr Chassis

Salescode	Extended Description	Qty
Watermaster Tanker Base Model		
0502-0005	A Water Master apparatus being compliant to NFPA 2009 (plumbing as applicable) or ULC (as applicable) to be provided.	1
CHASSIS MODEL		
1005-0166	Chassis Prep International with Maxx Force engine and tandem rear axle. Includes rear bumper/tow eyes, high idle, master light switch and master battery switch.	1
1005-0479	International 7400 (2) door, 242" WB, front tow hooks, 18K & 40K tandem axle with ESC, Officer side vertical exhaust with pipe guard, ABS brakes, 50 gal driver side fuel tank, (3) 1950 CCA batteries, 320 alternator, ember separator and AC.	1
1200-0117	International Maxx Force 330 HP engine with EVS3000 transmission. Includes Diamond Logix Exhaust Brake.	1
BUMPERS		
1160-0056	OEM chrome front bumper.	1
WHEEL OPTIONS		
1050-0052	International chassis rims painted job color. For use with tandem rear axle.	1
TIRE OPTIONS		
1060-0057	Tire pressure monitoring valve stem caps. For use with a chassis with 18K front and 40K tandem rear axle.	1
ENGINES & TRANSMISSIONS		
1200-0122	Electronically limited speed to 60 MPH.	1
CHASSIS OPTIONS		
1680-0142	Two (2) hood-mounted air horns with driver and officer mounted foot switches. International.	1
1680-0143	The commercial chassis to have seat belt and chassis pre-wiring for NFPA seating indicator and vehicle data recorder.	1
CAB STEP OPTIONS		
1640-0014	Standard OEM chassis trim package International 4400 or 7400. Includes light	1

	mounting bracket.	
SEATS		
1510-0142	Seating Package Two (2) Door International. Includes One (1) Gra-Mag fixed driver seat and (1) Gra-Mag fixed officer seat.	1
1510-0143	One (1) two person seating capacity tag- driver side area and two (2) seat belt warning tags- one (1) each cab door. For use with International chassis.	1
MISC INTERIOR CAB OPTIONS		
1685-0142	Main control console. Locate in cab centered between driver and officer. Includes NFPA in-cab controls/switching.	1
1685-0143	Cab gauge cluster with english dominant.	1
CAB ELECTRICAL OPTIONS		
1750-0347	Battery charger with indicator, inlet receptacle and air inlet with mounting plate. Locate to driver side of cab below driver door opening.	1
BODY MODEL		
3080-0211	Tandem axle body with 3000 gallon tank (with auxiliary rear tank fill). Includes driver side forward body access to vacuum pump, compartments L1/R1 with satin roll-up doors with header, driver and officer side compartment top storage areas (driver side includes double hose restraints) and rear body/bumper trim.	1
3080-0214	Anodes for water tank - (3) anodes located in bottom of water tank.	1
COVERS		
3305-0073	Vinyl crosslay cover. Includes mechanical hold-downs on top outer corners and quick release side flap hold downs. Cover color: Red.	1
PUMP MODULE		
3130-0253	Side mount pump module. Includes upper area for double stacked double preconnects.	1
LADDER STORAGE / RACKS		
3365-0150	Manually operated drop down rack on officer body. Secures portable folding tank with capacity of main tank on body.	1
MISC BODY OPTIONS		
3340-0504	E-ONE logo mounted (1) each side on forward body side rearward of water level gauge and (1) rear below the rear tank inlet and offset to driver side. Logos to be sized as applicable to available space.	1
PUMPS		
4005-0073	PTO for use with PM100 vacuum pump and EVS3000 transmission.	1
4005-0075	PTO for use with AP50 pump and EVS3000 transmission.	1
4005-0162	PM100 Vacuum Pump (for use with AP or MBP pumps only). Includes primary and secondary shut offs, (4) water level gauges- (3) body and (1) cab and the (3) inlets/outlets with switching.	1

PLUMBING KITS		
4410-0053	Plumbing kit with Hale AP50 (with officer side steamer) pump (500GPM). Includes (1) 2.5" Driver Side Discharge with droop and cap, (1) 2.5" Officer Side Discharge with droop and cap and (2) 1.5" Crosslay Discharges. The discharges are to be labeled and color coded in compliance with current NFPA.	1
PUMP OPTIONS		
4015-0093	The optional pump to be NFPA or ULC (as applicable) compliant. Includes primer, pump shift and indicators, (1) 2.5" driver side aux. intake with swing handle and test ports.	1
4015-0168	Engine cooler. For use with International 4400, 7400 and 7500 chassis.	1
PRESSURE GOVERNORS		
4465-0014	FRC In-Control pressure governor. Includes engine and master pump gauges. For use with International MaxxForce engines.	1
GAUGES		
4435-0141	Pump module discharge gauges (4) to be english dominant. For use with AP/MBP pumps.	1
ELECTRICAL SYSTEMS		
5010-0020	Body and cab electrical system.	1
5150-0089	Vehicle data recorder - 2009 NFPA compliant. Includes occupant detection with display. Display location on cab dash near the transmission shifter.	1
LIGHT BARS		
5380-0102	Whelen Justice model JE2NFPA 56" with MKEZ7 mounts. All LED (forward facing) lightbar.	1
WARNING LIGHT PACKAGES		
5550-0118	Whelen LED lower level cab warning light package. Includes light heads wiith bezels located (1) each side of hood area and (1) each side forward facing mounted in grill area.	1
5550-0119	Whelen LED lower level body warning light package. Includes (6) LED light heads located (1) each side forward of the rear wheel well, (1) each side rearward of the rear wheel well and (1) each side on rear of body down low below the taillights (offset outboard).	1
WARNING LIGHTS		
5600-0204	Whelen beacon Model RB6 (PR)- red driver/amber officer. Location: upper rear tank.	1
DOT LIGHTING		
5150-0088	DOT STT/BU lighting. Includes red LED stop/tail/turn and clear incandescent back-up lights. Lights mounted horizontally on the rear of the body	1
LIGHTS - COMPARTMENT, STEP & GROUND		
5380-0108	Cab (WHLN) LED ground lighting package with LED step lighting. Includes (1)	1

	Whelen light per side below the cab lower steps and (1) LED step light below the lower area of the cab for step lighting.		
5380-0109	LED (Whelen) underbody ground lighting. Includes lighting below the forward body and below the rear body.	1	
5380-0110	LED (Whelen) compartment light package. For use in L1 and R1 compartments.	1	
LIGHTS - NON-WARNING			
5400-0122	(7) incandescent scene lighting package. Locate lights - (1) forward area of tank, (2) each side of tank and (2) at rear of tank/body.	1	
CAMERAS / INTERCOM			
5350-0106	Camera system. Includes in-cab mounted monitor and officer side and rear body mounted cameras.	1	
MISC ELECTRICAL			
5110-0050	NFPA cab siren and speaker (WHLN) package. Includes (1) siren with (1) speaker located driver side front bumper (includes mounting bracket).	1	
HOSE / NOZZLES			
7700-0100	Adaptor, hose and strainer package. For use with vacuum pump system. For use with 2000 thru 4000 gallon tanks only.	1	
7700-0101	Aluminum 6" storz x 5" NH female thread swivel adaptor. For use with AP50 Pump Inlet.	1	
MISC LOOSE EQUIPMENT			
7900-0165	DOT driveaway kit. Includes three (3) triangular reflectors with case.	1	
EXTERIOR PAINT			
8100-0196	Cab paint FLNA 3225 Red. International NAV2893.	1	
STRIPING			
8300-0106	Chevron "A" style 6" Scotchlite striping on rear of tank. Colors to be Yellow/Red.	1	
8300-0107	4" White/Red Scotchlite stripe. Locate white on cab with bottom of stripe even with bottom of cab. The red is to be straight on the body side storage trays.	1	
WARRANTY / STANDARD & EXTENDED			
9100-0039	1 year full warranty.	1	
9100-0043	10 Year stainless steel plumbing warranty.	1	
PRICE	2013 E-ONE WATERMASTER 3000 TANKER - INTERNATIONAL 2DR CHASSIS		$245,159.

STATE OF OHIO TERM SCHEDULE

4200 SURFACE RD
COLUMBUS, OH 43228

Quote No: 57497

3/5/2013

Quote Rev:6 Drawing Rev:2

3000 GALLON TANK

500 GPM PUMP

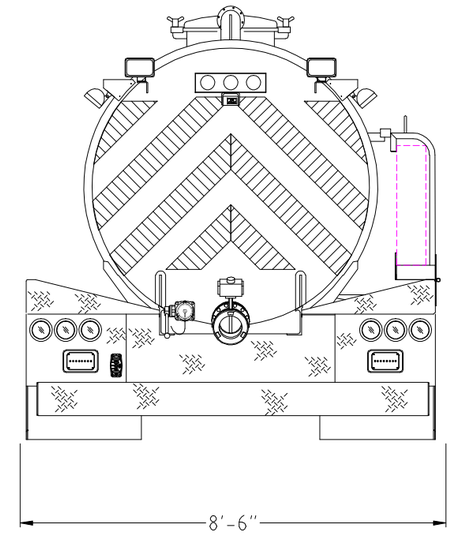

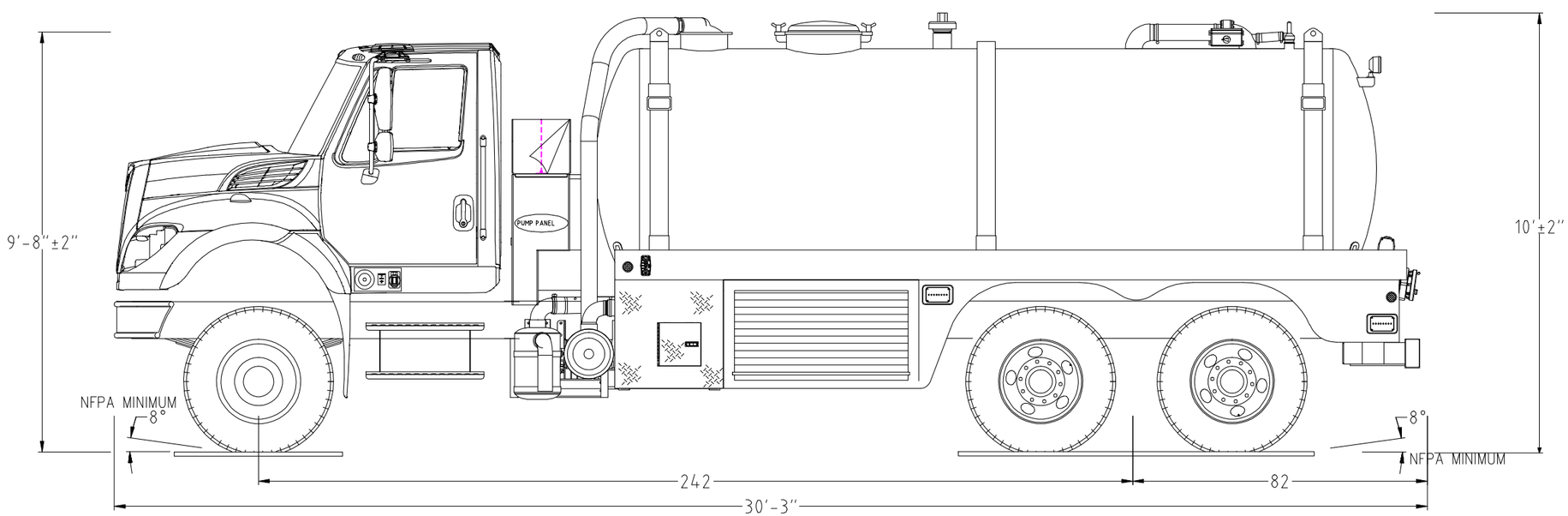

POWERED BY EZDRAW

Notice: This drawing provides a GENERAL REPRESENTATION of the vehicle configuration and should be used for evaluation purposes. The respective dimensions shown,including overall height and length, are estimates and may vary due to manufacturing processes. All other items such as lighting and fixtures, plumbing, compartmentation, and other generally assembled details are shown for REFERENCE ONLY and may not be a direct reflection of the final truck configuration. In ALL situations where this drawing may conflict with the specifications, THE SPECIFICATIONS, AS REFLECTED IN THE APPROVED SHOP ORDER, SHALL PREVAIL. Unless otherwise specified, the proposed apparatus will be manufactured to the latest NFPA recommendations as well as other applicable federally regulated safety regulations. E-One reserves the right to engineer and incorporate design improvements and changes without notice, while adhering to the intent of the specification.

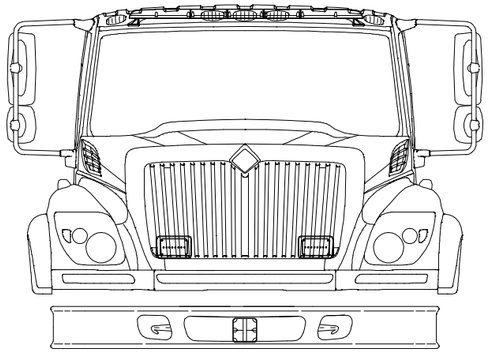

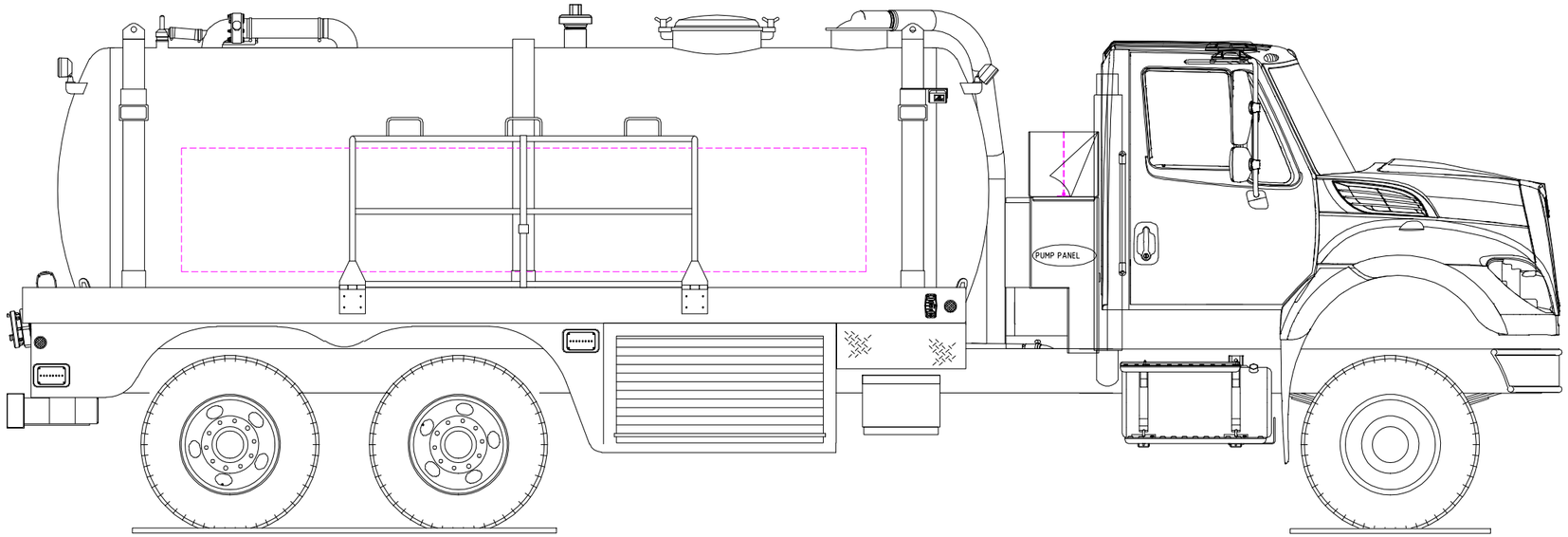

POWERED BY

EZDRAW

E-ONE OHIO STATE TERM SCHEDULE 2013 OPTIONS PRICE BOOK

WATERMASTER TANKERS - COMMERCIAL CHASSIS

1000	Chassis	
1005-0475	International 4400 (2) door, 215" WB, front tow hooks, 14K & 26K axles with ESC, Officer side vertical exhaust with pipe guard, ABS brakes, 50 gal driver side fuel tank, (3) 1950 CCA batteries, 320 alternator, ember separator and AC.	$85,609
1005-0476	International 4400 (2) door, 232" WB, front tow hooks, 14.6K & 26K axles with ESC, Officer side vertical exhaust with pipe guard, ABS brakes, 50 gal driver side fuel tank, (3) 1950 CCA batteries, 320 alternator, ember separator and AC.	$86,198
1005-0477	International 4400 (2) door, 221" WB, front tow hooks, 14K & 30K axles with ESC, Officer side vertical exhaust with pipe guard, ABS brakes, 50 gal driver side fuel tank, (3) 1950 CCA batteries, 320 alternator, ember separator and AC.	$86,798
1005-0479	International 7400 (2) door, 242" WB, front tow hooks, 18K & 40K tandem axle with ESC, Officer side vertical exhaust with pipe guard, ABS brakes, 50 gal driver side fuel tank, (3) 1950 CCA batteries, 320 alternator, ember separator and AC.	$94,310
1005-0480	International 7400 (2) door, 258" WB, front tow hooks, 18K & 40K tandem axle with ESC, Officer side vertical exhaust with pipe guard, ABS brakes, 50 gal driver side fuel tank, (3) 1950 CCA batteries, 320 alternator, ember separator and AC.	$94,472
1005-0481	International 7400 (2) door, 242" WB, front tow hooks, 18K & 46K tandem axle with ESC, Officer side vertical exhaust with pipe guard, ABS brakes, 50 gal driver side fuel tank, (3) 1950 CCA batteries, 320 alternator, ember separator and AC.	$97,904
1005-0482	International 7400 (2) door, 258" WB, front tow hooks, 18K & 46K tandem axle with ESC, Officer side vertical exhaust with pipe guard, ABS brakes, 50 gal driver side fuel tank, (3) 1950 CCA batteries, 320 alternator, ember separator and AC.	$97,904
1005-0483	International 7600 (2) door, 242" WB, front tow hooks, 20K & 46K tandem axle with ESC, Officer side vertical exhaust with pipe guard, ABS brakes, 50 gal driver side fuel tank, (3) 1950 CCA batteries, 320 alternator, ember separator and AC.	$127,903
1005-0484	International 7600 (2) door, 258" WB, front tow hooks, 20K & 46K tandem axle with ESC, Officer side vertical exhaust with pipe guard, ABS brakes, 50 gal driver side fuel tank, (3) 1950 CCA batteries, 320 alternator, ember separator and AC.	$127,963
1005-0572	International 7600 (2) door, 258" WB, front tow hooks, 20K & 46K tandem axle with ESC, Officer side vertical exhaust with pipe guard, ABS brakes, 50 gal driver side fuel tank, (3) batteries 2100 CCA total, 320 alternator, ember separator and AC.	$133,301
1025-0082	Driver Controlled Dif Lock. For use with International chassis with 26K rear axle.	$790
1025-0083	Driver Controlled Dif Lock. For use with International chassis with 30K rear axle.	$829
1025-0084	Driver Controlled Dif Lock (Rearward rear axle). For use with International chassis with 40K tandem rear axle.	$803
1025-0085	Driver Controlled Dif Lock (Rearward rear axle). For use with International chassis with 46K tandem rear axle.	$626
1050-0051	International chassis rims aluminum. For use with single rear axle.	$1,403
1050-0053	International chassis rims aluminum. For use with tandem rear axle.	$1,949
1050-0073	Wheel trim package. For use with steel or aluminum wheels.	$491
1060-0056	Tire pressure monitoring valve stem caps. For use with a chassis with 14K front and 30K rear axle.	$48
1060-0057	Tire pressure monitoring valve stem caps. For use with a chassis with 18K front and 40K tandem rear axle.	$66
1060-0058	Tire pressure monitoring valve stem caps. For use with a chassis with 18K front and 46K tandem rear axle.	$66
1060-0059	Tire pressure monitoring valve stem caps. For use with a chassis with 20K front and 46K tandem rear axle.	$66
1060-0084	Tire pressure monitoring valve stem caps. For use with a chassis with 14K front and 40K tandem rear axle.	$66
1060-0088	Tire pressure monitoring valve stem caps. For use with a chassis with 20K front and 40K tandem rear axle.	$158
1110-0000	Inlet for air system. Location: [#LOC].	$403
1160-0083	24" Bumper extension with 1/8" diamond plate gravel shield, 10" front stainless steel bumper with location for NFPA speaker and dual Hadley air horns with driver and officer foot switch controls.	$3,444
1160-0107	10" Stainless steel front bumper with driver side cut-out for NFPA speaker. Includes frame mounted painted tow hooks, 20" bumper extension (1/8" diamond plate) with center-mounted hose storage tray with red vinyl cover.	$3,208
1200-0123	Engine block heater. Locate receptacle below the driver side cab door.	$202

1200-0254	International Maxx Force 350 HP engine with EVS3000 transmission. Includes Diamond Logix Exhaust Brake.	$2,979
1510-0141	Seating Package Two (2) Door International. Includes One (1) National Brand air suspended driver seat and (1) National Brand air suspended officer seat.	$399
1535-0113	(2) Cabinets rear of commercial extended cab. Sized in height, width and depth as space within cab permits while allowing for installation requirements for a commercial chassis. Each cabinet to include (1) LED strip light mounted as applicable. Cabinets to be bolt-in and have zolatone grey interior and exterior finish.	$3,936
1640-0010	Diamond plate trim package for a (2) door International 4400. Includes driver and officer step trim that will utilize pieces already supplied by the OEM.	$1,352
1640-0011	Diamond plate trim package for a (2) door International 7400 or 7600. Includes driver and officer step trim that will utilize pieces already supplied by the OEM.	$1,352
1640-0017	Diamond plate trim package for a (2) door extended International 7500. Includes driver side and an officer side trim and stepping areas that will utilize pieces already supplied by the OEM. The rearward area below the extended cab will be formed diamond plate with support framing.	$2,494
1670-0049	Pair of hood mounted Lang Mekra convex mirrors (heated with black finish). International chassis only.	$343
1675-0155	Painted visor for International 4400 cab. Option 16XWD.	$209
1680-0138	Cab step area trim plates provided on the driver and officer side.	$202
1680-0139	Cab step area trim plates provided on the driver and officer side.	$202
1680-0140	Cab step area trim plates provided on the driver and officer side.	$202
1680-0142	Two (2) hood-mounted air horns with driver and officer mounted foot switches. International.	$851
1680-0185	RUDD (Rotogrip) 18 strand automatic tire chains. Includes switch in cab.	$3,284
1680-0205	Cab windows and locks to be power operated. Two (2) door International.	$582
1680-0240	AM/FM stereo with weatherband, clock, auxiliary input, includes multiple speakers, International/ Water Master.	$286
1685-0144	Cab gauge cluster with metric dominant.	$307
1685-0191	Diamond plate cover for battery charger/air compressor. Includes louvers for ventilation.	$238
1750-0202	Kussmaul battery charger with air compressor and air inlet. The battery charger receptacle and air inlet to include auto-eject. Locate to driver side below the driver door.	$991
1750-0272	Kussmaul battery charger with air compressor and air inlet. The battery charger receptacle and air inlet to include auto-eject. Locate to driver side body above vacuum pump access.	$1,887
1750-0273	Kussmaul battery charger. The battery charger receptacle and air inlet to include auto-eject. Locate to driver side body above vacuum pump access. No compressor required with charger	$1,197
1750-0282	Auto-Eject receptacle inlet 20 amp located below the driver's door with a red cover. Receptical to be wired to heaters on tank inlet / out collars. WaterMaster only.	$601
3000	**Body**	
3080-0083	Single axle body with 2500 gallon tank. Includes driver side forward body access to vacuum pump, compartments L1/R1 with satin roll-up doors with header, driver and officer side compartment top storage areas (driver side includes double hose restraints) and rear body/bumper trim.	$2,625
3080-0084	Tandem axle body with 3000 gallon tank. Includes driver side forward body access to vacuum pump, compartments L1/R1 with satin roll-up doors with header, driver and officer side compartment top storage areas (driver side includes double hose restraints) and rear body/bumper trim.	$5,924
3080-0085	Tandem axle body with 3500 gallon tank. Includes driver side forward body access to vacuum pump, compartments L1/R1 with satin roll-up doors with header, driver and officer side compartment top storage areas (driver side includes double hose restraints) and rear body/bumper trim.	$8,539
3080-0086	Tandem axle body with 4000 gallon tank. Includes driver side forward body access to vacuum pump, compartments L1/R1 with satin roll-up doors with header, driver and officer side compartment top storage areas (driver side includes double hose restraints) and rear body/bumper trim.	$11,154
3080-0092	Single axle body with 2500 gallon tank (with auxiliary rear tank fill). Includes driver side forward body access to vacuum pump, compartments L1/R1 with satin roll-up doors with header, driver and officer side compartment top storage areas (driver side includes double hose restraints) and rear body/bumper trim.	$2,625
3080-0093	Tandem axle body with 3000 gallon tank (with auxiliary rear tank fill). Includes driver side forward body access to vacuum pump, compartments L1/R1 with satin roll-up doors with header, driver and officer side compartment top storage areas (driver side includes double hose restraints) and rear body/bumper trim.	$5,924
3080-0094	Tandem axle body with 3500 gallon tank (with auxiliary rear tank fill). Includes driver side forward body access to vacuum pump, compartments L1/R1 with satin roll-up doors with header, driver and officer side compartment top storage areas (driver side includes double hose restraints) and rear body/bumper trim.	$8,227

3080-0095	Tandem axle body with 4000 gallon tank (with auxiliary rear tank fill). Includes driver side forward body access to vacuum pump, compartments L1/R1 with satin roll-up doors with header, driver and officer side compartment top storage areas (driver side includes double hose restraints) and rear body/bumper trim.	$11,154
3080-0153	Tandem axle body with 2500 gallon tank (with auxiliary rear tank fill). Includes driver side forward body access to vacuum pump, compartments L1/R1 with satin roll-up doors with header, driver and officer side compartment top storage areas (driver side includes double hose restraints) and rear body/bumper trim.	$5,924
3080-0205	Reinforcement pads welded to the Water Master aluminum tank by Brenner Tank for mounting of ladder support and brackets.	$433
3080-0206	Weld the ladder bracket support to the pads on the driver side on the Water Master tank (by E_ONE).	$591
3080-0209	Single axle body with 2000 gallon tank (with auxiliary rear tank fill). Includes driver side forward body access to vacuum pump, compartments L1/R1 with satin roll-up doors with header, driver and officer side compartment top storage areas (driver side includes double hose restraints) and rear body/bumper trim.	$348
3080-0210	Single axle body with 2500 gallon tank (with auxiliary rear tank fill). Includes driver side forward body access to vacuum pump, compartments L1/R1 with satin roll-up doors with header, driver and officer side compartment top storage areas (driver side includes double hose restraints) and rear body/bumper trim.	$2,972
3080-0211	Tandem axle body with 3000 gallon tank (with auxiliary rear tank fill). Includes driver side forward body access to vacuum pump, compartments L1/R1 with satin roll-up doors with header, driver and officer side compartment top storage areas (driver side includes double hose restraints) and rear body/bumper trim.	$6,271
3080-0212	Tandem axle body with 3500 gallon tank (with auxiliary rear tank fill). Includes driver side forward body access to vacuum pump, compartments L1/R1 with satin roll-up doors with header, driver and officer side compartment top storage areas (driver side includes double hose restraints) and rear body/bumper trim.	$8,575
3080-0213	Tandem axle body with 4000 gallon tank (with auxiliary rear tank fill). Includes driver side forward body access to vacuum pump, compartments L1/R1 with satin roll-up doors with header, driver and officer side compartment top storage areas (driver side includes double hose restraints) and rear body/bumper trim.	$11,502
3080-0214	Anodes for water tank - (3) anodes located in bottom of water tank.	$523
3130-0263	Side mount pump module. Includes upper area for double stacked double preconnects with area for dead lay of hose. Side panels to be stainless steel and backside of module to have diamond plate trim. Includes red crosslay cover with mechanical hold downs and quick release side flaps.	$1,036
3130-0446	Side mount pump module. Includes upper area for double stacked double preconnects with area for dead lay of hose. Side panels to be stainless steel and backside of module to have diamond plate trim.	$1,035
3136-0082	Two (2) pump compartment heaters are to be mounted in the pump area. Locate as low as possible.The lower area of the pump compartment to have a four (4) sided heat pan with removable bottoms. Extreme weather heat pan plates. Includes interior module area mounted plates for increasing the lower heat pan (forward and rearward) into the lower area of the module for increased heat retaining.	$4,028
3320-0026	(2) SCBA Storage. Located (1) each side and rearward of the rear axle.	$627
3320-0035	SCBA Bottle storage - behind the cab qty of (4)	$627
3320-0036	(4) SCBA Storage. Located (2) each side rearward of the rear axle in the body skirting.	$1,278
3320-0037	(4) SCBA Storage. Located (2) each side- (1) forward and (1) rearward of the rear axle in the body skirting.	$1,278
3320-0048	(4) SCBA Storage. Located (2) each side in wheel well - (1) forward and (1) rearward of the rear axle.	$1,341
3330-0117	Frame mounted stirrup style step with gator grip offset to forward area of pump module one each side. Requires relocating oil catch muffler.	$1,382
3330-0140	Driver side rear flop down step (24" wide). Includes driver side step area only gator grip overlay, (1) 18" handrail vertically mounted on rear inboard side of hard suction storage box and (1) 12" mounted horizontally on rear of driver side compartment top storage. Step to be stored in the up/pinned position when not in use.	$674
3340-0325	(PR) NFPA compliant wheel chocks. Locate (1) each side rearward of the rear axle.	$752
3340-0326	Storage compartment driver side compartment top. Locate to forward area. Includes roll-up door (wired to door ajar) with header and (1) interior strip light.	$2,080
3340-0377	Storage compartment driver side compartment top. Locate to forward area. Includes roll-up door (wired to door ajar) with header and (1) interior strip light. For use with 2000 Gallon Tank.	$2,080
3340-0378	Storage compartment driver side compartment top. Locate to forward area. Includes roll-up door (wired to door ajar) with header and (1) interior strip light. For use with 2500 Gallon Tank.	$2,080

3340-0379	Storage compartment driver side compartment top. Locate to forward area. Includes roll-up door (wired to door ajar) with header and (1) interior strip light. For use with 3000 Gallon Tank.	$2,080
3340-0380	Storage compartment driver side compartment top. Locate to forward area. Includes roll-up door (wired to door ajar) with header and (1) interior strip light. For use with 3500 Gallon Tank.	$2,080
3340-0381	Storage compartment driver side compartment top. Locate to forward area. Includes roll-up door (wired to door ajar) with header and (1) interior strip light. For use with 4000 Gallon Tank.	$2,080
3340-0402	Water Master wheel well to have E-One style trim. For use with tandem axle only.	$884
3340-0410	Water Master Body, Pump Module and Cab Tags in French to replace standard English E-One supplied Tags.	$1,642
3340-0466	Turtle Tile Brand Red Floor Matting covering all applicable Compartment Floors, Shelves, and Rollout Trays.	$723
3340-0468	Storage compartment driver side compartment top with extended length (58" opening with roll-up door open). Locate to forward area. Includes roll-up door (wired to door ajar) with header and (1) interior strip light. For use with 3500 Gallon Tank.	$2,310
3340-0469	Driver side upper body storage area to have black dri-deck installed and run full length and width as applicable. Area to be for storage of two (2) lays of 5" LDH hose (500' total). Includes bolt-in plate at rear to square off back of storage area and three (3) NFPA retaining straps (sized to wrap up from floor and over hoses with adjustablity for hose stacking). Hose to be deployable from the rear with rear body and bolt-in plate notched to provide rear opening. A red vinyl drop down flap shall be provided with quarter turn upper latching.	$913
3340-0515	Driver side upper body storage area to have black dri-deck installed and run full length and width as applicable. Area to be for storage of 400' 0f 2.5" DJ hose. Includes bolt-in plate at rear to square off back of storage area and three (3) NFPA retaining straps (sized to wrap up from floor and over hoses with adjustablity for hose stacking). Hose to be deployable from the side of the body.	$913
3340-0598	Driver side upper body storage area to have black dri-deck installed and run full length and width as applicable. Area to be for storage of 200' 0f 3" DJ hose. Includes welded plate at rear to square off back of storage area and three (3) NFPA retaining straps (sized to wrap up from floor and over hoses with adjustablity for hose stacking). Hose to be deployable from the rear of the body. A black vinyl drop down flap shall be provided with quarter turn upper latching.	$913
3365-0151	Zico electric drop down rack on officer body. Secures portable folding tank with capacity of main tank on body.	$6,450
3365-0152	Diamond plate portable folding tank cover. For use with 2000 tank and Zico drop down rack.	$748
3365-0153	Diamond plate portable folding tank cover. For use with 2500 tank and Zico drop down rack.	$748
3365-0154	(2) Zico quic-mount brackets (1 brackets supports 2 poles) with rubber pull-over hold-downs. Locate in driver side compartment top storage outboard. Position for use with (2) 6' pike poles.	$204
3365-0157	Diamond plate portable folding tank cover. For use with 3000 tank and Zico drop down rack.	$748
3365-0158	Diamond plate portable folding tank cover. For use with 3500 tank and Zico drop down rack.	$748
3365-0159	Diamond plate portable folding tank cover. For use with 4000 tank and Zico drop down rack.	$748
3365-0160	Manually operated drop down rack on driver body. Secures portable folding tank with capacity of main tank on body.	$876
3365-0161	Zico electric drop down rack on driver body. Secures portable folding tank with capacity of main tank on body.	$6,578
3365-0169	Triple hardsuction storage with NFPA compliant restraints. Locate driver side of tank with fixed mounted brackets. Trays to formed diamond plate (diamonds out) and sized to hold 6" x 15' hardsuction hose.	$1,554
3365-0201	Manually operated drop down rack on driver. To secure a 2500 portable folding tank IPO capacity of main tank on body. Includes rearward mounted tank stop (2500 gallon portable tank to stored offset forward in rack).	$1,221
3365-0204	Zico electric drop down ladder rack on officer body.	$5,347
3365-0205	Driver side hardsuction storage racks for (2) 18' hardsuction hoses. Each rack to be mounted to tank ribs and includes NFPA retaining straps.	$1,177
3365-0207	Diamond plate box for storage of (3) 10' hard suction hoses (hoses not included). Box to be mounted off driver side of tank (tank rib mounts) and is to include rear access door with push-button latch. Door to be wired to door ajar indicator.	$3,153
3365-0212	(2) pike pole tubes with retaining pins. Locate driver side mounted to tank ribs. Tubes are for use with up to (2) 10' poles.	$294
3365-0213	Manually operated drop down rack (PR) located (1) each side of body. Each capable of securing a 4000 gallon portable folding tank.Includes diamond plate cover along ends, top and outward side with (2) 20" handrails mounted along the forward and rearward ends and (2) 12" handrails mounted along the top towards the ends of the cover.	$2,651
3365-0224	Double hardsuction storage with NFPA compliant restraints. Locate driver side of tank with fixed mounted brackets. Trays to formed diamond plate (diamonds out) and sized to hold (1) 6" x 16' and (1) 6" x 18' hardsuction hose.	$1,036

3365-0235	Diamond plate box for storage of (4) 16' hard suction hoses (hoses not included). Box to be mounted off driver side of tank (tank rib mounts) and is to include rear access door with push-button latch. Door to be wired to door ajar indicator. Position box to allow loading of lower body storage tray with hose from rear.	$2,241
3365-0269	Zico electric drop down hardsuction rack. Rack located to officer of body. The control switching to be located on the side pump panel with the rack being in full view of the operator during operations. The rack includes (2) main rack mounted 18' trays and (1) upper mounted 18' tray.	$6,709
3365-0287	Smooth plate portable folding tank cover, painted job color. For use with 3000 tank and Zico drop down rack.	$909
3365-0327	Ladder brackets. Locate on welded brackets on the driver side of the Water master tank.	$571
3365-0341	Ladder brackets. Locate on welded brackets on the driver side of the Water Master tank. Brackets shall be mounted so the bottom edge of stored ladder(s) are approximately 18" above the hose bed storage floor.	$571
3370-0113	Tracks for adjustable shelf and/or tray. Location: Driver side forward body compartment.	$102
3370-0114	Tracks for adjustable shelf and/or tray. Location: Officer side forward body compartment.	$102
3380-0124	Floor mounted roll-out tray with 500lbs capacity. Mount on L1 and R1 floor.	$711
3380-0135	Roll-out tray. Mount on driver side forward body compartment floor.	$711
3380-0136	Roll-out tray. Mount on officer side forward body compartment floor.	$711
3380-0137	Adjustable roll-out tray. Mount in driver side forward body compartment.	$1,021
3380-0138	Adjustable roll-out tray. Mount in officer side forward body compartment.	$1,021
4000	**Pumps/Tanks**	
4005-0065	PM100 Vacuum Pump (for use with AP or MBP pumps only). Includes primary and secondary shut offs, (4) water level gauges- (3) body and (1) cab and the (3) inlets/outlets with switching.	$2,965
4005-0084	PM100 Vacuum Pump (for use with DSD pump only). Includes primary and secondary shut offs, (4) water level gauges- (3) body and (1) cab and the (3) inlets/outlets with switching.	$2,965
4005-0088	Hydraulically driven PM 100 vacuum pump and APH50 water pump. Hydraulic motor driven by PTO on driver side of EVS 4000 series transmission. 40 gallon hydraulic reservoir. Vacuum pump system includes primary and secondary shut-offs, 4 water level gauges ? 3 body and 1 cab and the (3) inlets/outlets with switching.	$2,965
4005-0097	PM100 Vacuum Pump (for use with DSD pump only). Includes primary and secondary shut offs, (4) water level gauges- (3) body and (1) cab and the (2) inlets/outlets officer's, driver side and (1) 10" rear dump only with switching.	$7,495
4005-0153	PM100 Vacuum Pump (for use with APH or MBP pumps only). Includes primary and secondary shut offs, (4) water level gauges- (3) body and (1) cab and the (3) inlets/outlets with switching.	$2,963
4005-0161	PM80 Vacuum Pump. Includes primary and secondary shut offs, (4) water level gauges- (3) body and (1) cab and the (3) inlets/outlets with switching.	$762
4005-0162	PM100 Vacuum Pump (for use with AP or MBP pumps only). Includes primary and secondary shut offs, (4) water level gauges- (3) body and (1) cab and the (3) inlets/outlets with switching.	$3,726
4005-0163	PM100 Vacuum Pump (for use with DSD pump only). Includes primary and secondary shut offs, (4) water level gauges- (3) body and (1) cab and the (3) inlets/outlets with switching.	$3,726
4015-0096	Engine cooler. For use with International 7600 chassis.	$2,793
4015-0097	Heated intake strips (4). Located (1) on each 6" tank intake and (1) 2.5" rear tank fill.	$1,801
4015-0099	Zinc Anodes for Hale Pump and tank - (Pair) (1) pump and (1) tank.	$682
4015-0143	Pump&Roll kit WM. To include Digitial Master pressure gauge, Switches, and Preset discharge pressure relief valve controls in cab. Locate in cab center console.	$2,691
4015-0151	Indicator Light for valve position on the vacumn pump.	$1,647
4015-0161	Addition Heated intake strips (1). Located (1) on addition 2.5" direct tank fill.	$451
4015-0168	Engine cooler. For use with International 4400, 7400 and 7500 chassis.	$514
4015-0169	Engine cooler. For use with International 7600 chassis.	$413
4020-0037	Three (3) anodes located in main body water tank.	$869
4405-0057	Booster Reel. Reel to have capacity of 200' of 1" (not included). Includes aluminum plate enclosure on lower frame mount and the upper diamond plate panel forward of R1 will be reduced in size for the reel to fit under that area, easily accessible rewind switch, rollers and air blow-out. Locate officer side lower forward body/pump area.	$3,489
4405-0072	Booster Reel. Reel to have capacity of 200' of 1" (Reeltex hose). Includes aluminum plate enclosure on lower frame mount and the upper diamond plate panel forward of R1 will be reduced in size for the reel to fit under that area, easily accessible rewind switch, rollers, 200' of 1" reeltex hose and air blow-out. Locate officer side lower forward body/pump area.	$5,209
4405-0079	Booster Reel. Reel to have capacity of 200' of 1" (Reeltex hose). Includes aluminum plate enclosure on lower frame mount and the upper diamond plate panel forward of R1 will be reduced in size for the reel to fit under that area, easily accessible rewind switch, rollers, 200' of 1" reeltex hose (4-50' sections) and air blow-out. Locate officer side lower forward body/pump area.	$5,209

4410-0053	Plumbing kit with Hale AP50 (with officer side steamer) pump (500GPM). Includes (1) 2.5" Driver Side Discharge with droop and cap, (1) 2.5" Officer Side Discharge with droop and cap and (2) 1.5" Crosslay Discharges. The discharges are to be labeled and color coded in compliance with current NFPA.	$26,332
4410-0054	Plumbing Kit with Hale MBP500 NFPA pump (500GPM). Includes (1) 2.5" Driver Side Discharge with droop and cap, (1) 2.5" Officer Side Discharge with droop and cap and (2) 2.5" Crosslay Discharges. The discharges are to be labeled and color coded in compliance with current NFPA.	$32,574
4410-0055	Plumbing Kit with Hale MBP1000 NFPA pump (1000GPM). Includes (1) 2.5" Driver Side Discharge with droop and cap, (1) 2.5" Officer Side Discharge with droop and cap and (2) 2.5" Crosslay Discharges. The discharges are to be labeled and color coded in compliance with current NFPA.	$32,574
4410-0056	Plumbing Kit for use with a Hale DSD NFPA pump (1250GPM). Includes (1) FRC In-Control display, (1) 2.5" Driver Side Discharge with droop and cap, (2) 2.5" Officer Side Discharges with droops and caps and (2) 2.5" Crosslay Discharges. The discharges are to be labeled and color coded in compliance with current NFPA.	$38,818
4415-0664	Front bumper 1.5" pre-connect with manual valve. Locate pre-connect in front bumper tray down low on rear wall. Includes air-blow out and bleeder valve.	$4,607
4415-0717	1.5" front bumper discharge line. Includes air actuated Akron valve with switching located in cab on console. Discharge line to terminate just below driver side of bumper with male NPT threads (line is for use with dealer installed bumper turret. Dealer responsible for plumbing application and any additional length of line or connectors). Secure line as required and cap. Includes cab mounted pressure gauge and side panel bleeder and blow-out.	$1,928
4415-0893	Front bumper 1.5" pre-connect with manual valve and pressure gauge. Locate pre-connect in front bumper tray down low on rear wall.	$2,159
4415-0894	2.5" officer forward hosebed/body tray pre-connect. Includes connection to 2.5" valve assembly, pressure gauge and bleeder. Pre-connect to be positioned rearward of the forward Zico rack mount of the officer side hosebed/body tray. Hosebed/Body tray to include black dri-dek flooring for NFPA and a red vinyl hosebed cover (secure along the sides with awning strips and twist locks along the inboard side. The area inboard of the forward and rearward Zico rack mounts to have a bolt-in wall to square off the hose storage area.	$3,326
4417-0093	Akron FireFox remote control monitor. Located above pump area with joystick controller at cab console. For use with AP or MBP pumps.	$10,128
4417-0094	Akron FireFox remote control monitor. Located above pump area with joystick controller at cab console. For use with DSD pump.	$9,331
4417-0095	Monitor and Reel kit. Includes (1) Akron FireFox remote control monitor. Located above pump area with joystick controller at cab console and (1) Booster Reel with a capacity for 200' of 1" (not included). Includes aluminum plate enclosure with easily accessible rewind switch, rollers and air blow-out. Locate officer side lower pump area. For use with AP or MBP pumps.	$12,742
4417-0096	Monitor and Reel kit. Includes (1) Akron FireFox remote control monitor. Located above pump area with joystick controller at cab console and (1) Booster Reel with a capacity for 200' of 1" (not included). Includes aluminum plate enclosure with easily accessible rewind switch, rollers and air blow-out. Locate officer side lower pump area. For use with DSD pump.	$12,742
4432-0144	Foam ready Manifold for a Hale Foam Logix or a Foam Pro system- plumbed to Crosslay #1, Driver side 2.5" discharge, Hose reel, and (1) 2.5" outlet for dealer install bumper monitor. W/3" plumbing	$2,302
4435-0145	Additional discharge gauge(s). Includes english dominant reading.	$147
4435-0146	Additional discharge gauge(s). Includes metric dominant reading.	$151
4445-0047	Bleeder/Drain .75 Valve Plumbed to each 6" inlet/outlet.	$187
4450-0154	Manual Valve Overrides for the (3) 6" valves tank inlet/outlet valves in the event of an air pressure failure.	$1,141
4450-0155	2.5" Tank Fill Akron Electric/air control Valve.	$1,790
4450-0159	Inlet/Outlet 6" Heated Collar. The heat collar will be install between the valve, and tank flange. They are connected to the coolant system on the truck to circulate anti-freeze. Also a 110 volt heater and thermostat for freeze control when the truck is parker. The 110 volt heater shall be connected to shoreline.	$1,867
4450-0209	2" tank fill Akron manual valve.	$1,489
5000	**Electrical**	
5010-0059	VFD Text display for V-MUX electrical system. Location: [#LOC].	$839
5100-0053	All cab console switches (as applicable) and the (4) body mount intake switches to be LED smart switches (IPOS).	$1,612
5110-0062	(4) rocker switches with back lighing to be provided IPO the standard toggle switches on body for the (3) main vacuum pump intake/discharge.	$461
5110-0081	NFPA cab siren and speaker (WHLN) package. Includes (1) siren with (2) speakers located - (1) to driver side and (1) to officer side of front bumper (includes mounting bracket).	$257

5110-0095	(3) rocker switches with back lighting to be provided in cab on center console. Lable switch "Driver Spray Nozzle", "Officer Spray Nozzle" and "Remote Nozzle Light". Switching only being provided. Dealership to make all final connections to switches from dealer installed ground nozzle application.	$345
5150-0107	Whelen arrow turn signals, front and rear as applicable, to be set to sequential flash pattern.	$25
5300-0308	Whelen Mini-Freedom LED side facing front cab light bars (PR) model FNMINI 24" with MKEZ7 mounts. Red and blue LEDs with clear lenses. For use on rear mount platforms with supplemental upper level Zone A warning lights. Locate one each side front cab corners side facing.	$4,586
5310-0032	Federal Signal Signal Master Light bar. Surface mounted at rear of tank. Includes (8) LED lights with controller located in cab.	$823
5310-0033	Whelen traffic advisor light bar. Surface mounted at rear of tank. Includes (8) LED lights with controller located in cab.	$1,033
5350-0128	Camera (3) backup Safety Vision LCD with split screen capable monitor. WaterMaster	$5,305
5350-0129	Camera system. Includes dual in-cab mounted monitors and officer side and rear body mounted cameras.	$1,415
5380-0164	LED (Whelen) underbody ground lighting additional (PR). (1) each side below the mid-body. Water Master only.	$402
5380-0165	LED (ROM V3) compartment light package. For use in L1 and R1 compartments. Water Master only.	$402
5390-0042	Whelen 900 series model 90C0ENZR Super LED Opti-Scene light (PR) with weatherproof connectors. Switch in cab (driver and officer side lights switched separately). Locate [#LOC].	$1,782
5390-0061	Rear upper tank deck/scene lights wired through chassis reverse.	$83
5390-0062	Sides and rear upper tank deck/scene lights wired through chassis reverse.	$83
5390-0063	(8) LED scene lighting package. Locate (3) each side of tank and (2) at rear of body/tank. All (8) lights to be wired to operate with chassis transmisson in reverse.	$488
5390-0086	Whelen Pioneer LED scene light package/ Trucklite work light. Includes (2) model PFA2, (2) model PFA1 lights with bail mounts and (1) work light. Rear and front lights wired through work light switch in switch panel; side facing lights switched seperately. Location(s): (1) PFA2 each side center of tank, (1) PFA1 each side rear facing and (1) work light forward facing on upper tank.	$4,616
5390-0093	All tank mounted Deck/Scene lighting to be wired through chassis reverse.	$246
5390-0120	Whelen 900 series model 90C0ENZR Super LED Opti-Scene light (PR) with diamond plate mounting box. Switch in cab (driver and officer side lights switched separately). Locate [#LOC].	$1,970
5390-0122	Whelen 900 series model 90C0ENZR Super LED Opti-Scene light (PR) with cast products mounting box. Switch in cab (driver and officer side lights switched separately). Locate [#LOC].	$1,970
5390-0123	Federal Signal model QL97LEDSCENE LED scene light (PR) with weatherproof connectors. Includes switch accessible to driver (driver and officer side lights switched separately). Locate [#LOC].	$1,055
5390-0149	Whelen 900 series model 90C0ENZR Super LED Opti-Scene light (EA) with diamond plate mounting box. Switch in cab (driver and officer side lights switched separately). Locate [#LOC].	$986
5390-0150	Whelen 900 series model 90C0ENZR Super LED Opti-Scene light (EA) with cast products mounting box. Switch in cab (driver and officer side light(s) switched separately). Locate [#LOC].	$986
5400-0095	(2) additional scene lighting package. Locate lights - (1) each side of tank centered. Wired with standard work light switching.	$498
5400-0103	Fog Lights-Qtz Halogen (PR) Amber and located front of bumper.	$297
5400-0120	(9) LED scene lighting package. Locate lights - (3) each side of tank, (2) at rear of tank/body and (1) at front of tank/body.	$480
5550-0235	Code 3 NFPA warning light package. Includes X58A red/blue lightbar, (8) 65 LED lights (4 red, 4 blue), (2) LXEX1F LED lights (1 red, 1 blue) and (2) 550 rotators (1 red, 1 blue)	$482
5600-0239	Whelen Ultra Freedom Micro Edge LED (PR) Model MCFLED25 clear lense with red LEDs. Location: (1) each side at rear of tank.	$1,645
7000	**Loose Equipment**	
7700-0075	Hard Suction Hose 6" with Pyrolite Couplings 16' long	$1,935
7700-0090	Adaptor, hose and strainer package. For use with vacuum pump system. For use with 3000 to 4000 gallon tanks.	$2,695
7700-0091	Floating strainer. For use with vacuum pump system.	$754
7700-0093	Adaptor, hose and strainer package. For use with vacuum pump system. For use with 2000 gallon tank.	$2,695
7700-0094	Adaptor, hose and strainer package. For use with vacuum pump system. For use with 2000 thru 4000 gallon tank.	$2,695
7700-0095	Adaptor, hose and strainer package. For use with vacuum pump system. For use with 2500 gallon tank.	$3,875
7700-0097	Soft Suction Hose 20ft 5" with 4.5" long handle female coupler on one end and a 4.5" long handle male coupler on the other end.	$1,687

7700-0100	Adaptor, hose and strainer package. For use with vacuum pump system. For use with 2000 thru 4000 gallon tanks only.	$2,695
7700-0101	Aluminum 6" storz x 5" NH female thread swivel adaptor. For use with AP50 Pump Inlet.	$308
7700-0102	Aluminum 6" storz x 6" NH female thread swivel adaptor. For use with MBP/DSD Pump Inlet.	$308
8000	**Paint & Lettering**	
8100-0195	International paint Break 24AGM. Required with all two-tone painted International cabs.	$796
8100-0200	International paint Break 23FGA. Required with all two-tone painted International cabs.	$760
8200-0043	3" Scotchlite Letters (60). Includes shade and outline per letter.	$1,110
8300-0107	4" White/Red Scotchlite stripe. Locate white on cab with bottom of stripe even with bottom of cab. The red is to be straight on the body side storage trays.	$891
8300-0108	4" Red Scotchlite stripe. Locate red on cab with bottom of stripe even with bottom of cab and straight on the body side storage trays.	$891
8300-0158	4" Black Scotchlite stripe. Locate on cab with bottom of stripe even with bottom of cab. The stripe is to be straight on the body side storage trays.	$891
8300-0196	Scotchlite Stripe - 4" wide reflective stripe on the front of the forward bumper shall be applied. Center on front bumper and extend side to side to best conform to bumper contour. Color: White (reflective).	$120
8300-0213	Scotchlite Stripe - 6" wide reflective stripe on the front of the forward bumper shall be applied. Center on front bumper and extend side to side to best conform to bumper contour. Color: White (reflective).	$120
8400-0021	Label "NO SMOKING" with universal symbol 2"x6"; white background with red letters. Location: [#LOC].	$41
8400-0023	Install customer supplied logo. Location: [#LOC].	$74

Notes:

1) Availability of options are limited by other options selected, and not all options are available in every chassis/apparatus configuration. Selection of an option may require several of the above parts/items to complete the option package.

2) Certain options, alone or in combination with other options, may require heavier axle/suspension packages, longer frames, or reinforced frames at additional cost per the above price list.

3) To configure options, the E-One State Term Schedule authorized dealer will use quote configuration software to select the components necessary to effect the option, feature, or configuration requested and quote the total option price.

Fire Apparatus Quotation for:
STATE OF OHIO TERM SCHEDULE

Quotation Number: 57498 Rev: 3

Unit Description: WTSA-COMM

Quote Description: Tanker, Wetside, Single Axle, Aluminum

Salescode	Extended Description	Qty
TESTING COMPLIANCE STANDARD		
1001-0024	The E-ONE supplied components of the vehicle shall meet the requirements of NFPA 1901, 2009 edition (ULC as applicable) as a Tanker.	1
CHASSIS PREP		
1020-0011	Comm Chas Prep E-1 Supp-Non FL.	1
TIRE OPTIONS		
1060-0050	Tire pressure monitoring valve stem caps.	1
AIR SYSTEM OPTIONS		
1110-0010-277	Air inlet. To charge brake system. Commercial chassis only. Location: driver's door step area.	1
1110-0064	Dual Hadley Hood Mounted Air Horns with Driver and Officer Foot Switches to be Supplied and Installed by International.	1
ENGINES & TRANSMISSIONS		
1200-0137	Electronically limited speed to 60 MPH.	1
CHASSIS OPTIONS		
1680-0011	Tow eyes rear below body, painted.	1
1680-0078	Tow hooks front. Not available with extended front bumper. Tow hooks are OEM supplied with chassis.	1
1680-0106	OEM chassis step package for International 4000 and 7000 series. Includes mounting plate for the battery charger receptacle and air inlet.	1
CAB MODEL		
1520-0083	International 4400 4x2 Chassis, (2) door cab, 169" WB, MaxxForce 9-330hp, Allison 3000EVS, exhaust brake, 14.6k front axle, 30k rear axle, ABS brakes with ATC, steel wheels job color, front tow hooks, chrome bumper, 50 gal fuel tank rt. side under cab, air suspension driver seat, fixed passenger seat.	1
MISC EXTERIOR CAB OPTIONS		

1675-0007	Diesel fuel only label.	1
SEATS		
1685-0012	Seating capacity tag of two occupants.	1
CAB ELECTRICAL OPTIONS		
1750-0059-277-04	Receptacle inlet 20 amp with a Yellow cover. Location: driver's door step area.	1
1750-0343	Battery charger E-ONE LPC 20. 120 volt inlet, 20 amp output.	1
BODY MODEL		
3080-0191	Extruded alum body for Wetside water tank, single axle chassis with driver side under tank pump. Includes driver and officer side forward lower body compartments, dia plt wheel well area and flat back style rearend with 12" tailboard.	1
BODY SPEC		
3090-0031-T11	The cab to body gap is approx 4.4". (Note: this option is to support internal programming functions)	1
DOORS		
3300-0199-003	Door single vertically hinged diamond plate. (For use on products with integral driprail only) Location(s): L1	1
3300-0201-015	Door double vertically hinged w/rotary latches - diamond plate. (For use on products with integral driprail only) Location(s): R1	1
COVERS		
3305-0007-000-06	Vinyl Red hose bed cover with attached rear flap(s).	1
3305-0167-000-06	Vinyl rear cover for diamond plate cover on pre-connect tray. Color: Red	1
PUMP MODULE		
3130-0412	Pump module for use with frame mounted PTO pump. Will be mounted below tank forward of driver side front compartment and will reduce the size of L1 by approximately 39".	1
PUMP PANELS		
3134-0105	Stainless steel driver side pump panel. Wetside tanker with under tank pump only.	1
MISC PUMP PANEL OPTIONS		
4460-0003	Pump panel tags color coded per NFPA compliance.	1
WATER TANK		
4010-0153	Tank 2000 gallon Wetside. Note: Any foam cell(s) and/or storage options in tank will reduce the overall water capacity. Tank capacity is 2000 US gallons / 1665 Imperial gallons / 7571 Liters.	1
WATER TANK OPTIONS		
4020-0004	Newton dump mounting plate.	1

TANK PLUMBING		
4020-0018	Rear tank dump. Includes painted steel assembly with manually actuated valve on top of dump assembly. For use with slip on extension and chute.	1
4450-0010	2" tank fill Akron manual valve.	1
4450-0121	3" Tank To Pump Akron Air Actuated Valve w/4" Plumbing.	1
4450-0165-199	3" rear direct tank fill. Includes swing handle control, swivel with droop and cap with retainer. Located to officer's side of the rear body.	1
LADDER STORAGE / RACKS		
3340-0409-198	Adjustable tracks (pair). Locate tracks to driver's side assembly. For use with ladder and/or hard suction rack(s).	1
3365-0183-M12	Hard suction storage rack. Locate driver side in adjustable track (above ladder brackets if applicable). Includes NFPA retaining strap(s).	2
3365-0189-M13-L3	Manual drop-down portable tank storage rack. Includes forward and rearward securing clamps with manual releases. Locate rack to officer side on compartment top of body. Rack sized for steel framed 2100 portable tank.	1
3365-0294	There shall be a metal plate mounted to the side of the portable tank rack to assist in the application of the NFPA stripe.	1
HANDRAILS / STEPS		
3330-0141-525	Access ladder with aluminum side rails and aluminum ribbed extruded steps for NFPA hosebed access and handrail mounted on upper hosebed side (as applicable). LED lighting provided and positioned to illuminate steps per NFPA. Ladder to be located rear of body officer side.	1
MISC BODY OPTIONS		
3090-0002	The unit has no overall height restrictions.	1
3090-0004	The unit has no overall length restrictions.	1
3340-0093	Mud flaps, rear, black with E-ONE logo.	1
3340-0523	Hosebed area above booster tank. Includes raised sides and front of water tank, slatted flooring and adjustable divider extrusions.	1
3340-0552	Double pre-connect tray on top of the drivers side compartment top offset to the rear. Tray to be "U" shape to hold 200' of 1.75" DJ (each). Includes hinged diamond plate cover.	1
3340-0588	Slip-on painted steel dump elbow and 36" straight extension chute. Includes body mounted removable support arm and mounting brackets at rear of body for elbow and straight chute.	1
3340-0612	Diamond plate shield over electrical items mounted on extended box at upper rear of Wetside tank.	1
3340-0680	Body mainframe layout line to be 23". Includes body and all applicable modules.	1
PUMPS		
4005-0103	Rating 500 GPM.	1
4005-0144	Hale AP PTO driven pump. Includes driver side 5" intake with cap (shipped loose). Capacity of 500GPM/1892LPM. For use with Wetside Tanker only.	1

PUMP CERTIFICATION		
4475-0004	Pump certification 250-500 GPM	1
PUMP OPTIONS		
4015-0073	Manual operated master pump drain. The master drain shall be clearly marked and placed in accessible location rearward below running board on driver side or L1 compartment.	1
INTAKES		
4440-0005	2.5" Left Intake Akron Manual Valve.	1
INTAKE OPTIONS		
4445-0009	Intake relief valve, Akron.	1
DISCHARGES AND PRECONNECTS		
4415-0014-581	2.5" Left Pump Panel Discharge Akron Manual Valve. Location: left side discharge 1.	1
4415-0014-582	2.5" Left Pump Panel Discharge Akron Manual Valve. Location: left side discharge 2.	1
4415-0875	Pair of 1.5" preconnect discharges with Akron manual valves. For use with narrow Wetside tank with driver side compartment top pre-connect storage. Plumbing to terminate with 1.5" MNST threads.	1
DISCHARGE OPTIONS		
4417-0070	Push-Pull "T" handle controls.	1
4417-0089-575	Lift lever quarter turn bleeder valve. Plumbed for use with: left discharge.	2
4417-0089-J29	Lift lever quarter turn bleeder valve. Plumbed for use with: preconnect #1.	1
4417-0089-J30	Lift lever quarter turn bleeder valve. Plumbed for use with: preconnect #2.	1
PRESSURE GOVERNORS		
4465-0020	Class 1 TPG Plus pressure governor. Includes master intake and discharge gauges, water, oil, volt and tachometer.	1
GAUGES		
4435-0001	Class 1 Intelli-Tank water tank level gauge.	1
4435-0047-318	Class 1 Tank Level Intel Water Gauge, Additional. Location: rear center body.	1
4435-0092-581	2.5" Class 1 compound pressure gauge (30-0-400). Discharge: left side discharge 1.	1
4435-0092-582	2.5" Class 1 compound pressure gauge (30-0-400). Discharge: left side discharge 2.	1
4435-0092-J29	2.5" Class 1 compound pressure gauge (30-0-400). Discharge: preconnect #1.	1
4435-0092-J30	2.5" Class 1 compound pressure gauge (30-0-400). Discharge: preconnect #2.	2
ELECTRICAL SYSTEMS		
5010-0014-G97	Vehicle data recorder for commercial cab - 2009 NFPA compliant. Includes occupant	1

	detection with display. Display location: cab dash above transmission shift panel.	
5010-0036	V-MUX Electrical system for pumper / tanker / rescue.	1
LIGHT BARS		
5300-0267	Light bar Whelen Justice model JE2NFPA 56" LED with clear lenses and MKEZ7 mounts. N/A on Vista roofs with front facing windows. Includes (4) red corner facing LIN6 LED lights, (6) forward facing CON3 Linear LED lights; (4) red, (2) white. Location: Centered on the front cab roof.	1
WARNING LIGHT PACKAGES		
5550-0182-P27	Whelen LED lower level warning light package. Includes (10) red LIN3 lights w/chrome flanges. Locate side facing lights: at forward most position, in rear wheelwell offset to front, and in rear wheelwell offset to rear.	1
WARNING LIGHTS		
5600-0086-479-09	Whelen beacon model RB6T (PR) with driver amber, officer red domes. Location: rear upper body on aerial style brackets.	1
5600-0105-170	Hazard (door ajar) light 2" LED. Location: center overhead.	1
SIRENS		
5500-0015	Whelen model 295SLSA1 siren with microphone (replaced 295HFSA1).	1
5500-0024-170	The electronic siren control is to be located on the center overhead.	1
SPEAKERS		
5510-0034-211	Whelen SA315P electronic siren speaker recessed in front bumper. Location: officer side front bumper.	1
DOT LIGHTING		
5150-0017	License plate light LED with chrome housing located at the rear of the body.	1
5150-0042	Federal Signal LED tail lights. Includes 4" diameter red LED stop/tail, amber turn and LED clear back-up.	1
5150-0112	Marker light LED body package. Commercial pumper Wetside tanker bodies only.	1
LIGHTS - COMPARTMENT, STEP & GROUND		
5380-0198	Compartment light package ROM V3 LED (2) for Wetside tanker. Includes one 12" light per compartment.	1
5380-0200	Ground light package EON LED - small.	1
5380-0205	Cab step lighting package. Includes (2) EON LED lights per side.	1
LIGHTS - DECK AND SCENE		
5390-0076	Hose bed light Truck-Lite LED model 81380. Locate at front of hose bed. Switched with work light switch in cab.	1
5390-0115	Whelen 600 series gradient Super-LED scene lights (6). Switch in cab (driver and officer side lights switched separately). Lights located (2) each side of body up high (offset forward and rearward) and (2) at rear of body up high. Wetside only.	1

LIGHTS - NON-WARNING			
5400-0003	Engine compartment light (EA).	1	
5400-0143	Pump panel LED light package for side mount. Includes (3) Tecniq EON lights with S/S housings. Includes S/S light shield. Wetside only.	1	
5400-0152	Pump compartment light EON LED. Includes switch on pump operator's panel.	1	
MISC ELECTRICAL			
5110-0017	Back-up alarm 97 dB.	1	
HOSE / NOZZLES			
7700-0012	Hard suction hose 5" with Pyrolite couplings.	2	
MISC LOOSE EQUIPMENT			
7900-0008	Chrome Barrel Strainer 5".	1	
7900-0014	DOT Required Drive Away Kit - Kit includes three (3) triangular warning reflectors with carrying case. This kit is for the end user and is to remain with the truck.	1	
EXTERIOR PAINT			
8100-0377	Body to be unpainted.	1	
8100-0400	Wetside water tank to be unpainted.	1	
STRIPING			
8300-0002-Q55-12	NFPA Scotchlite Stripe - 4" wide and straight on front/sides of cab and sides/rear of body. Color: White. Location: low on side of cab and low on side of wetside tank.	1	
8300-0177-000-72	Chevron "A" style 6" printed sheet Scotchlite striping on rear of Wetside body (on panels only - not tank). Colors to be Yellow/Red.	1	
WARRANTY / STANDARD & EXTENDED			
9100-0000	Standard 1 Year Warranty.	1	
9100-0004	10 Year/100,000 Mile Structural Warranty - Statement of Warranty.	1	
9100-0005	10 Year Stainless Steel Plumbing Warranty - Statement of Warranty.	1	
SUPPORT, DELIVERY, INSPECTIONS AND MANUALS			
9300-0009	Manuals, Operator and Service CD-ROM.	1	
PRICE	**2013 E-ONE WETSIDE TANKER, 2000 GAL, INTERNATIONAL CHASSIS**		**$188,534.**

STATE OF OHIO TERM SCHEDULE

4200 SURFACE RD
COLUMBUS, OH 43228

Quote No: 57498

2/26/2013

Quote Rev:3 Drawing Rev:1

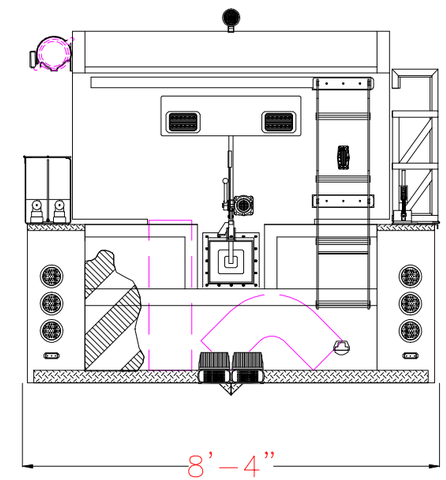

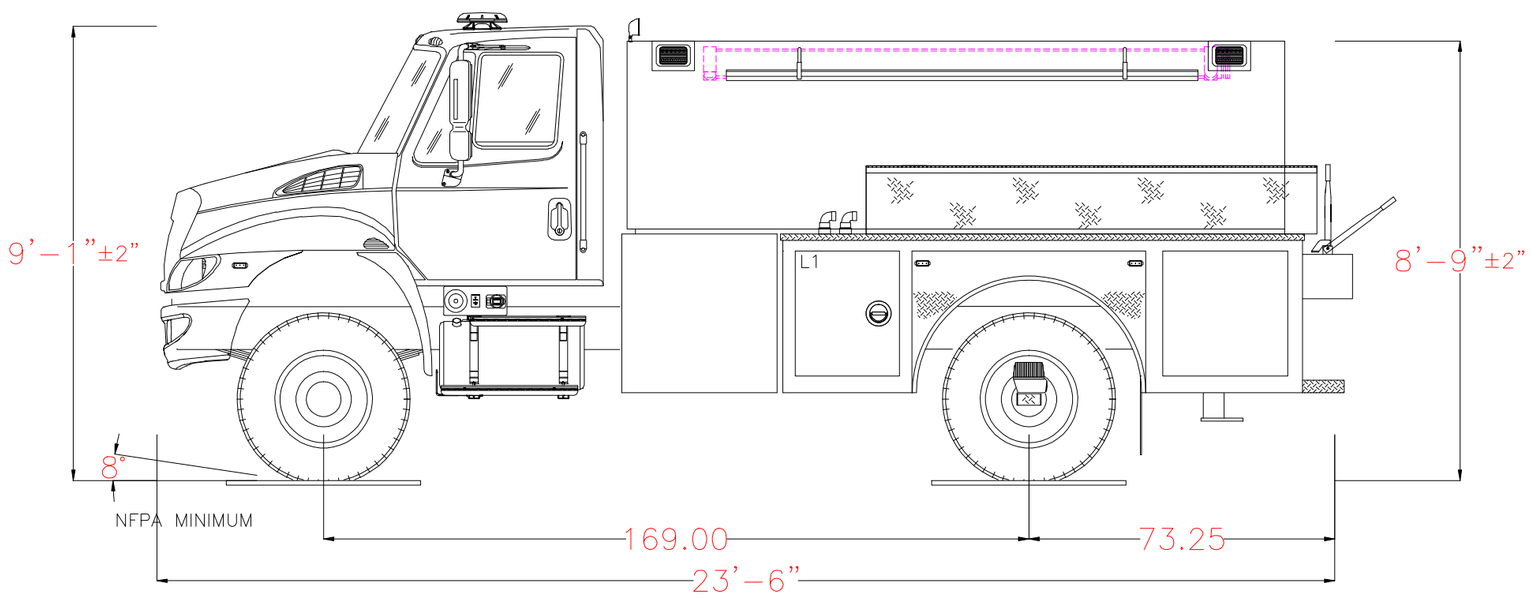

POWERED BY EZDRAW

Notice This drawing provides a GENERAL REPRESENTATION of the vehicle configuration and should be used for evaluation purposes. The respective dimensions shown,including overall height and length, are estimates and may vary due to manufacturing processes. All other items such as lighting and fixtures, plumbing, compartmentation, and other generally assembled details are shown for REFERENCE ONLY and may not be a direct reflection of the final truck configuration. In ALL situations where this drawing may conflict with the specifications, THE SPECIFICATIONS, AS REFLECTED IN THE APPROVED SHOP ORDER, SHALL PREVAIL. Unless otherwise specified, the proposed apparatus will be manufactured to the latest NFPA recommendations as well as other applicable federally regulated safety regulations. E-One reserves the right to engineer and incorporate design improvements and changes without notice, while adhering to the intent of the specification.

	HOSE LOADS :
0 GPM PUMP	
0 TOTAL VOLUME	
0 TOTAL FOAM	

	OPENING		INTERIOR DIMENSIONS				
COMPT.	WIDTH	HEIGHT	WIDTH	LOWER HEIGHT	LOWER DEPTH	UPPER HEIGHT	UPPER DEPTH
L1	25	30	25	30	26	N/A	N/A

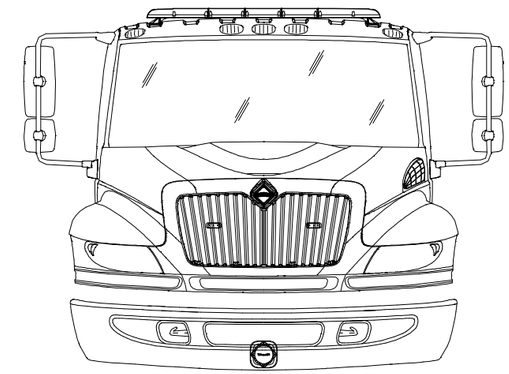

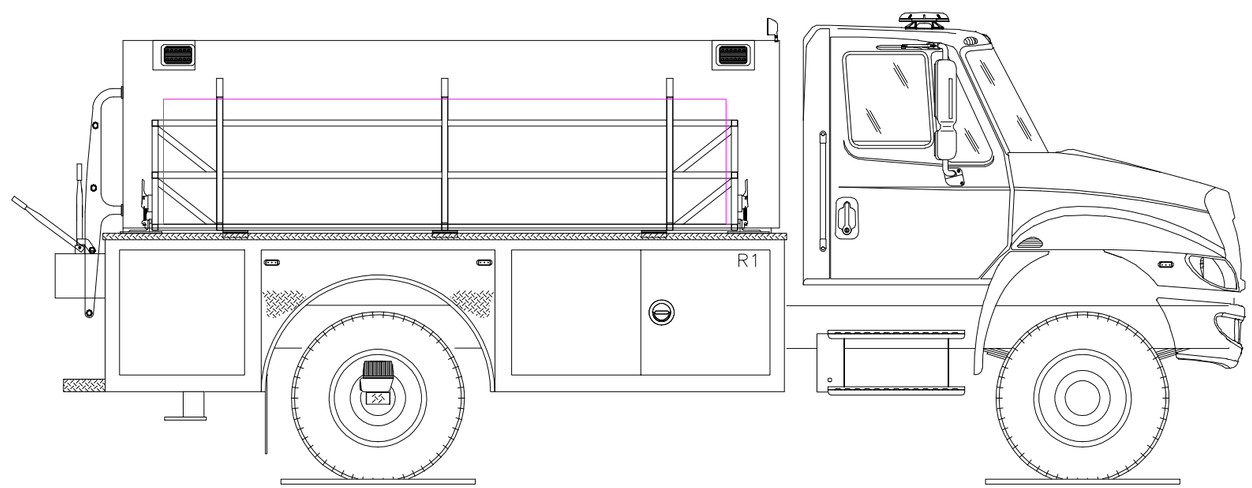

POWERED BY EZDRAW

Fire Apparatus Quotation for:
STATE OF OHIO TERM SCHEDULE

Quotation Number: 57499 Rev: 2

Unit Description: WTTA-COMM

Quote Description: Tanker, Wetside, Tandem Axle, Aluminum

Salescode	Extended Description	Qty
TESTING COMPLIANCE STANDARD		
1001-0024	The E-ONE supplied components of the vehicle shall meet the requirements of NFPA 1901, 2009 edition (ULC as applicable) as a Tanker.	1
CHASSIS PREP		
1020-0011	Comm Chas Prep E-1 Supp-Non FL.	1
TIRE OPTIONS		
1060-0050	Tire pressure monitoring valve stem caps.	1
AIR SYSTEM OPTIONS		
1110-0010-277	Air inlet. To charge brake system. Commercial chassis only. Location: driver's door step area.	1
1110-0064	Dual Hadley Hood Mounted Air Horns with Driver and Officer Foot Switches to be Supplied and Installed by International.	1
ENGINES & TRANSMISSIONS		
1200-0137	Electronically limited speed to 60 MPH.	1
CHASSIS OPTIONS		
1680-0011	Tow eyes rear below body, painted.	1
1680-0078	Tow hooks front. Not available with extended front bumper. Tow hooks are OEM supplied with chassis.	1
1680-0106	OEM chassis step package for International 4000 and 7000 series. Includes mounting plate for the battery charger receptacle and air inlet.	1
CAB MODEL		
1520-0094	International 7400 6x4 Chassis, (2) door cab, 193" WB, MaxxForce 10-350hp, Allison 3000EVS, exhaust brake, 16k front axle, 40k tandem rear axle with air supension, ABS brakes with ATC, steel wheels job color, front tow hooks, chrome bumper, 50 gal fuel tank rt. side under cab, air suspension driver seat, fixed passenger seat.	1

MISC EXTERIOR CAB OPTIONS		
1675-0007	Diesel fuel only label.	1
SEATS		
1685-0012	Seating capacity tag of two occupants.	1
CAB ELECTRICAL OPTIONS		
1750-0059-277-04	Receptacle inlet 20 amp with a Yellow cover. Location: driver's door step area.	1
1750-0343	Battery charger E-ONE LPC 20. 120 volt inlet, 20 amp output.	1
BODY MODEL		
3080-0193	Extruded alum body for Wetside water tank, tandem axle chassis with driver side under tank pump. Includes driver and officer side forward lower body compartments, dia plt wheel well area and flat back style rearend with 12" tailboard.	1
BODY SPEC		
3090-0031-T05	The cab to body gap is approx 2.9". (Note: this option is to support internal programming functions)	1
DOORS		
3300-0199-003	Door single vertically hinged diamond plate. (For use on products with integral driprail only) Location(s): L1	1
3300-0201-015	Door double vertically hinged w/rotary latches - diamond plate. (For use on products with integral driprail only) Location(s): R1	1
COVERS		
3305-0007-000-06	Vinyl Red hose bed cover with attached rear flap(s).	1
3305-0167-000-06	Vinyl rear cover for diamond plate cover on pre-connect tray. Color: Red	1
PUMP MODULE		
3130-0412	Pump module for use with frame mounted PTO pump. Will be mounted below tank forward of driver side front compartment and will reduce the size of L1 by approximately 39".	1
PUMP PANELS		
3134-0105	Stainless steel driver side pump panel. Wetside tanker with under tank pump only.	1
MISC PUMP PANEL OPTIONS		
4460-0003	Pump panel tags color coded per NFPA compliance.	1
WATER TANK		
4010-0151	Tank 3000 gallon Wetside. Note: Any foam cell(s) and/or storage options in tank will reduce the overall water capacity. Tank capacity is 3000 US gallons / 2498 Imperial gallons / 11356 Liters.	1
WATER TANK OPTIONS		

4020-0004	Newton dump mounting plate.	1
TANK PLUMBING		
4020-0018	Rear tank dump. Includes painted steel assembly with manually actuated valve on top of dump assembly. For use with slip on extension and chute.	1
4450-0010	2" tank fill Akron manual valve.	1
4450-0121	3" Tank To Pump Akron Air Actuated Valve w/4" Plumbing.	1
4450-0165-199	3" rear direct tank fill. Includes swing handle control, swivel with droop and cap with retainer. Located to officer's side of the rear body.	1
LADDER STORAGE / RACKS		
3340-0409-198	Adjustable tracks (pair). Locate tracks to driver's side assembly. For use with ladder and/or hard suction rack(s).	1
3365-0183-M12	Hard suction storage rack. Locate driver side in adjustable track (above ladder brackets if applicable). Includes NFPA retaining strap(s).	2
3365-0189-M13-L7	Manual drop-down portable tank storage rack. Includes forward and rearward securing clamps with manual releases. Locate rack to officer side on compartment top of body. Rack sized for steel framed 3000 portable tank.	1
3365-0294	There shall be a metal plate mounted to the side of the portable tank rack to assist in the application of the NFPA stripe.	1
HANDRAILS / STEPS		
3330-0141-525	Access ladder with aluminum side rails and aluminum ribbed extruded steps for NFPA hosebed access and handrail mounted on upper hosebed side (as applicable). LED lighting provided and positioned to illuminate steps per NFPA. Ladder to be located rear of body officer side.	1
MISC BODY OPTIONS		
3090-0002	The unit has no overall height restrictions.	1
3090-0004	The unit has no overall length restrictions.	1
3340-0093	Mud flaps, rear, black with E-ONE logo.	1
3340-0524	Hosebed area above booster tank. Includes raised sides and front of water tank, slatted flooring and adjustable divider extrusions.	1
3340-0552	Double pre-connect tray on top of the drivers side compartment top offset to the rear. Tray to be "U" shape to hold 200' of 1.75" DJ (each). Includes hinged diamond plate cover.	1
3340-0588	Slip-on painted steel dump elbow and 36" straight extension chute. Includes body mounted removable support arm and mounting brackets at rear of body for elbow and straight chute.	1
3340-0612	Diamond plate shield over electrical items mounted on extended box at upper rear of Wetside tank.	1
3340-0680	Body mainframe layout line to be 23". Includes body and all applicable modules.	1
PUMPS		
4005-0103	Rating 500 GPM.	1

4005-0144	Hale AP PTO driven pump. Includes driver side 5" intake with cap (shipped loose). Capacity of 500GPM/1892LPM. For use with Wetside Tanker only.	1
PUMP CERTIFICATION		
4475-0004	Pump certification 250-500 GPM	1
PUMP OPTIONS		
4015-0073	Manual operated master pump drain. The master drain shall be clearly marked and placed in accessible location rearward below running board on driver side or L1 compartment.	1
INTAKES		
4440-0005	2.5" Left Intake Akron Manual Valve.	1
INTAKE OPTIONS		
4445-0009	Intake relief valve, Akron.	1
DISCHARGES AND PRECONNECTS		
4415-0014-581	2.5" Left Pump Panel Discharge Akron Manual Valve. Location: left side discharge 1.	1
4415-0014-582	2.5" Left Pump Panel Discharge Akron Manual Valve. Location: left side discharge 2.	1
4415-0875	Pair of 1.5" preconnect discharges with Akron manual valves. For use with narrow Wetside tank with driver side compartment top pre-connect storage. Plumbing to terminate with 1.5" MNST threads.	1
DISCHARGE OPTIONS		
4417-0070	Push-Pull "T" handle controls.	1
4417-0089-575	Lift lever quarter turn bleeder valve. Plumbed for use with: left discharge.	2
4417-0089-J29	Lift lever quarter turn bleeder valve. Plumbed for use with: preconnect #1.	1
4417-0089-J30	Lift lever quarter turn bleeder valve. Plumbed for use with: preconnect #2.	1
PRESSURE GOVERNORS		
4465-0020	Class 1 TPG Plus pressure governor. Includes master intake and discharge gauges, water, oil, volt and tachometer.	1
GAUGES		
4435-0001	Class 1 Intelli-Tank water tank level gauge.	1
4435-0047-318	Class 1 Tank Level Intel Water Gauge, Additional. Location: rear center body.	1
4435-0092-581	2.5" Class 1 compound pressure gauge (30-0-400). Discharge: left side discharge 1.	1
4435-0092-582	2.5" Class 1 compound pressure gauge (30-0-400). Discharge: left side discharge 2.	1
4435-0092-J29	2.5" Class 1 compound pressure gauge (30-0-400). Discharge: preconnect #1.	1
4435-0092-J30	2.5" Class 1 compound pressure gauge (30-0-400). Discharge: preconnect #2.	2

ELECTRICAL SYSTEMS		
5010-0014-G97	Vehicle data recorder for commercial cab - 2009 NFPA compliant. Includes occupant detection with display. Display location: cab dash above transmission shift panel.	1
5010-0036	V-MUX Electrical system for pumper / tanker / rescue.	1
LIGHT BARS		
5300-0267	Light bar Whelen Justice model JE2NFPA 56" LED with clear lenses and MKEZ7 mounts. N/A on Vista roofs with front facing windows. Includes (4) red corner facing LIN6 LED lights, (6) forward facing CON3 Linear LED lights; (4) red, (2) white. Location: Centered on the front cab roof.	1
WARNING LIGHT PACKAGES		
5550-0182-P27	Whelen LED lower level warning light package. Includes (10) red LIN3 lights w/chrome flanges. Locate side facing lights: at forward most position, in rear wheelwell offset to front, and in rear wheelwell offset to rear.	1
WARNING LIGHTS		
5600-0086-479-09	Whelen beacon model RB6T (PR) with driver amber, officer red domes. Location: rear upper body on aerial style brackets.	1
5600-0105-170	Hazard (door ajar) light 2" LED. Location: center overhead.	1
SIRENS		
5500-0015	Whelen model 295SLSA1 siren with microphone (replaced 295HFSA1).	1
5500-0024-170	The electronic siren control is to be located on the center overhead.	1
SPEAKERS		
5510-0034-210	Whelen SA315P electronic siren speaker recessed in front bumper. Location: center front bumper.	1
DOT LIGHTING		
5150-0017	License plate light LED with chrome housing located at the rear of the body.	1
5150-0042	Federal Signal LED tail lights. Includes 4" diameter red LED stop/tail, amber turn and LED clear back-up.	1
5150-0112	Marker light LED body package. Commercial pumper Wetside tanker bodies only.	1
LIGHTS - COMPARTMENT, STEP & GROUND		
5380-0198	Compartment light package ROM V3 LED (2) for Wetside tanker. Includes one 12" light per compartment.	1
5380-0200	Ground light package EON LED - small.	1
5380-0205	Cab step lighting package. Includes (2) EON LED lights per side.	1
LIGHTS - DECK AND SCENE		
5390-0076	Hose bed light Truck-Lite LED model 81380. Locate at front of hose bed. Switched with work light switch in cab.	1
5390-0115	Whelen 600 series gradient Super-LED scene lights (6). Switch in cab (driver and	1

	officer side lights switched separately). Lights located (2) each side of body up high (offset forward and rearward) and (2) at rear of body up high. Wetside only.	
LIGHTS - NON-WARNING		
5400-0003	Engine compartment light (EA).	1
5400-0143	Pump panel LED light package for side mount. Includes (3) Tecniq EON lights with S/S housings. Includes S/S light shield. Wetside only.	1
5400-0152	Pump compartment light EON LED. Includes switch on pump operator's panel.	1
MISC ELECTRICAL		
5110-0017	Back-up alarm 97 dB.	1
HOSE / NOZZLES		
7700-0012	Hard suction hose 5" with Pyrolite couplings.	2
MISC LOOSE EQUIPMENT		
7900-0008	Chrome Barrel Strainer 5".	1
7900-0014	DOT Required Drive Away Kit - Kit includes three (3) triangular warning reflectors with carrying case. This kit is for the end user and is to remain with the truck.	1
EXTERIOR PAINT		
8100-0377	Body to be unpainted.	1
8100-0400	Wetside water tank to be unpainted.	1
STRIPING		
8300-0002-Q55-12	NFPA Scotchlite Stripe - 4" wide and straight on front/sides of cab and sides/rear of body. Color: White. Location: low on side of cab and low on side of wetside tank.	1
8300-0177-000-72	Chevron "A" style 6" printed sheet Scotchlite striping on rear of Wetside body (on panels only - not tank). Colors to be Yellow/Red.	1
WARRANTY / STANDARD & EXTENDED		
9100-0000	Standard 1 Year Warranty.	1
9100-0004	10 Year/100,000 Mile Structural Warranty - Statement of Warranty.	1
9100-0005	10 Year Stainless Steel Plumbing Warranty - Statement of Warranty.	1
SUPPORT, DELIVERY, INSPECTIONS AND MANUALS		
9300-0009	Manuals, Operator and Service CD-ROM.	1
PRICE	2013 E-ONE WETSIDE TANKER, 3000 GALLON, INTERNATIONAL CHASSIS	$207,200.

STATE OF OHIO TERM SCHEDULE

4200 SURFACE RD
COLUMBUS, OH 43228

Quote No: 57499

3/25/2013

Quote Rev:2 Drawing Rev:2

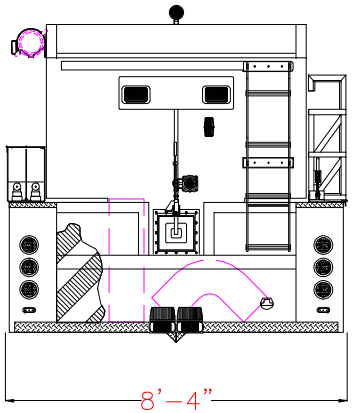

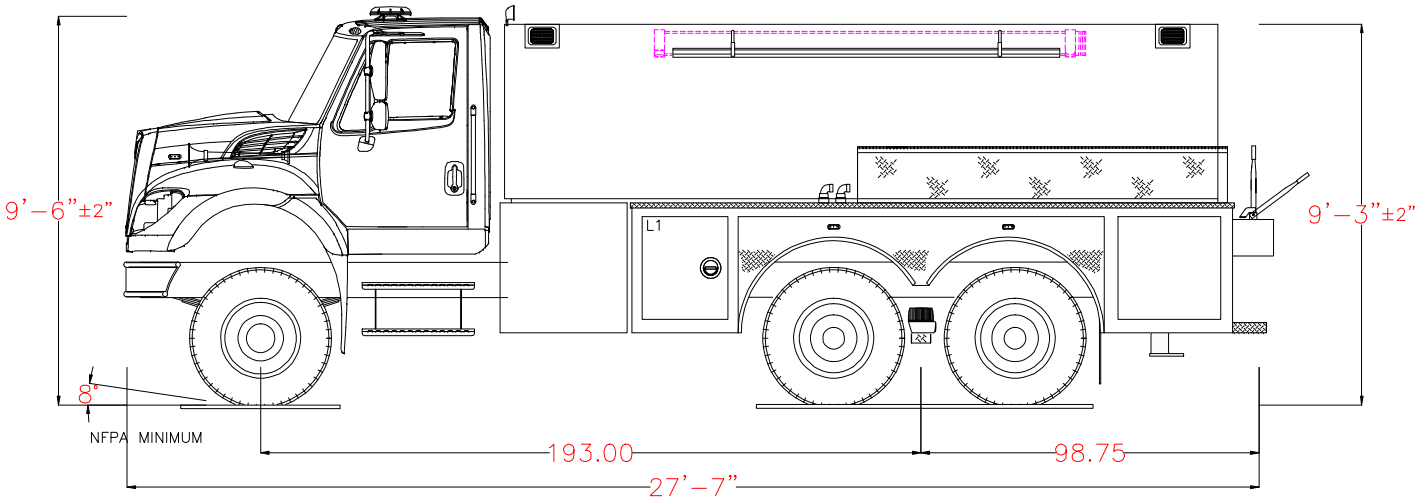

POWERED BY EZDRAW

Notice: This drawing provides a GENERAL REPRESENTATION of the vehicle configuration and should be used for evaluation purposes. The respective dimensions shown,including overall height and length, are estimates and may vary due to manufacturing processes. All other items such as lighting and fixtures, plumbing, compartmentation, and other generally assembled details are shown for REFERENCE ONLY and may not be a direct reflection of the final truck configuration. In ALL situations where this drawing may conflict with the specifications, THE SPECIFICATIONS, AS REFLECTED IN THE APPROVED SHOP ORDER, SHALL PREVAIL. Unless otherwise specified, the proposed apparatus will be manufactured to the latest NFPA recommendations as well as other applicable federally regulated safety regulations. E-One reserves the right to engineer and incorporate design improvements and changes without notice, while adhering to the intent of the specification.

	HOSE LOADS :
0 GPM PUMP 0 TOTAL VOLUME 0 TOTAL FOAM	

	OPENING		INTERIOR DIMENSIONS				
COMPT.	WIDTH	HEIGHT	WIDTH	LOWER HEIGHT	LOWER DEPTH	UPPER HEIGHT	UPPER DEPTH
L1	25	30	25	30	26	N/A	N/A

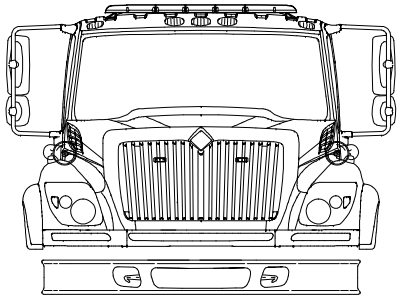

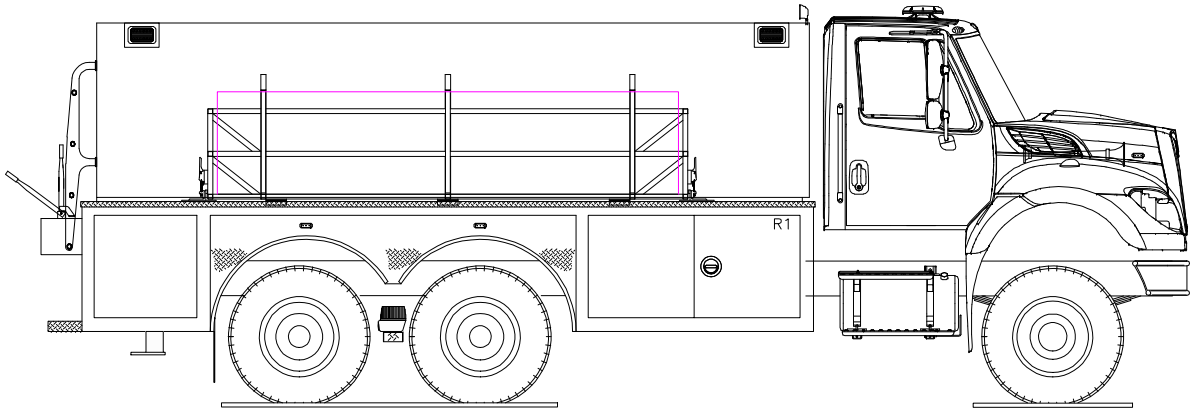

POWERED BY EZDRAW

E-ONE OHIO STATE TERM SCHEDULE 2013 OPTIONS PRICE BOOK

WETSIDE TANKERS - COMMERCIAL CHASSIS

1000	Commercial Chassis & Chassis Options	Price
1020-0011	Comm Chas Prep E-1 Supp-Non FL.	$4,956
1050-0029	Front & rear axle wheel simulator kit. Includes stainless steel wheel simulator and center cap with E-ONE logo.	$1,750
1050-0073	Wheel trim package. For use with steel or aluminum wheels.	$450
1060-0050	Tire pressure monitoring valve stem caps.	$167
1110-0000	Inlet for air system. Location: [#LOC].	$370
1110-0010	Air inlet. To charge brake system. Commercial chassis only. Location: [#LOC].	$370
1110-0062	Dual Hadley Hood Mounted Air Horns with Driver and Officer Foot Switches to be Supplied and Installed by International.	$683
1520-0083	International 4400 4x2 Chassis, (2) door cab, 169" WB, MaxxForce 9-330hp, Allison 3000EVS, exhaust brake, 14.6k front axle, 30k rear axle, ABS brakes with ATC, steel wheels job color, front tow hooks, chrome bumper, 50 gal fuel tank rt. side under cab, air suspension driver seat, fixed passenger seat, .	$89,387
1520-0084	International 4400 4x2 Chassis, (2) door cab, 207" WB, MaxxForce 9-330hp, Allison 3000EVS, exhaust brake, 14.6k front axle, 30k rear axle, ABS brakes with ATC, steel wheels job color, front tow hooks, chrome bumper, 50 gal fuel tank rt. side under cab, air suspension driver seat, fixed passenger seat, .	$89,554
1520-0094	International 7400 6x4 Chassis, (2) door cab, 193" WB, MaxxForce 10-350hp, Allison 3000EVS, exhaust brake, 16k front axle, 40k tandem rear axle with air supension, ABS brakes with ATC, steel wheels job color, front tow hooks, chrome bumper, 50 gal fuel tank rt. side under cab, air suspension driver seat, fixed passenger seat, .	$98,160
1520-0095	International 7400 6x4 Chassis, (2) door cab, 232" WB, MaxxForce 10-350hp, Allison 3000EVS, exhaust brake, 16k front axle, 46k tandem rear axle with air supension, ABS brakes with ATC, steel wheels job color, front tow hooks, chrome bumper, 50 gal fuel tank rt. side under cab, air suspension driver seat, fixed passenger seat, .	$103,565
1675-0137	Tag for front grille, front of bumper and both side of hood shall have a tag that reads "REMOVE MONITOR BEFORE LIFTING". See photos on file.	$263
1680-0011	Tow eyes rear below body, painted.	$597
1680-0012	Tow eyes rear frame painted.	$531
1680-0106	OEM chassis step package for International 4000 and 7000 series. Includes mounting plate for the battery charger receptacle and air inlet.	$150
1680-0239	Tow eyes rear frame painted mounted low just above tailboard.	$531
1685-0206	Center control console. Locate in cab between driver and officer. Includes area for NFPA siren, electrical, and in-cab controls (as applicable) switching.	$1,586
1685-0255	Center control console. Locate in cab between driver and officer. Includes area for NFPA siren, electrical, customer supplied radio cut-out and in-cab controls (as applicable) switching.	$1,586
1685-0265	Smooth plate cover(s) for battery charger and air compressor. These cover's shall be painted to match cab interior and shall include louvers as required for ventilation.	$218
1750-0019	Battery charger Super Smart 110 volt, 20 amp.	$403
1750-0024	Auto-Eject receptacle inlet 20 amp located [#LOC] with a [#COL] cover.	$551
1750-0059	Receptacle inlet 20 amp with a [#COL] cover. Location: [#LOC].	$278
1750-0308	Battery charging connector 12V Anderson with weatherproof cover. Includes mating connector (ship loose). Location: Driver's door step area.	$278
3000	**Body**	
3080-0189	Extruded alum body for Wetside water tank, single axle chassis and individual side mount pump module. Includes driver and officer side forward lower body compartments, dia plt wheel well area and flat back style rearend with 12" tailboard.	$10,274
3080-0190	Extruded alum body for Wetside water tank, tandem axle chassis and individual pump module forward of body. Includes driver and officer side forward lower body compartments, dia plt wheel well area and flat back style rearend with 12" tailboard.	$12,187
3080-0191	Extruded alum body for Wetside water tank, single axle chassis with driver side under tank pump. Includes driver and officer side forward lower body compartments, dia plt wheel well area and flat back style rearend with 12" tailboard.	$9,988
3080-0192	Extruded alum body for Wetside water tank, single axle chassis with driver side under tank pump and officer side forward discharge/intake panel. Includes driver and officer side forward lower body compartments, dia plt wheel well area and flat back style rearend with 12" tailboard.	$10,276
3080-0193	Extruded alum body for Wetside water tank, tandem axle chassis with driver side under tank pump. Includes driver and officer side forward lower body compartments, dia plt wheel well area and flat back style rearend with 12" tailboard.	$11,899
3080-0194	Extruded alum body for Wetside water tank, tandem axle chassis with driver side under tank pump and officer side forward discharge/intake panel. Includes driver and officer side forward lower body compartments, dia plt wheel well area and flat back style rearend with 12" tailboard.	$12,187

3080-0203	Extruded alum body for Wetside water tank, tandem axle chassis with driver side under tank pump and officer side forward discharge/intake panel. Includes driver and officer side forward lower body compartments, space for newton dump in wheel well area and flat back style rearend with 12" tailboard.	$13,741
3100-0258	Driver extruded half side tandem body with 74" wide forward and 34" wide rearward compartmentation.For use with wetside narrow tank application.	$5,025
3110-0155	Extruded lower rearend for use with Wetside tank. Includes smooth plate panels and area for Newton dump application.	$962
3110-0180	Bolt-on diamond plate 14" tailboard (full width of body). For use with rear ladder application. Includes handrails- (1) vertically on trailing edge of body opposite side of ladder and handrail(s) horizontally below hosebed.	$1,028
3110-0188	Bolt-on diamond plate 10" tailboard (full width of body). For use with rear ladder application. Includes a handrail vertically mounted on trailing edge of body opposite side of ladder.	$894
3110-0210	Bolt-on diamond plate 10" tailboard (full width of body). For use with folding step application. Includes handrails- (1) vertically on trailing edge of body opposite each side of body and handrail(s) horizontally below hosebed.	$894
3110-0220	Bolt-on 10" tailboard (full width of body) aluminum smooth plate with black Scorpion coating (IPOS diamond plate). For use with rear ladder application. Includes handrails- (1) vertically on trailing edge of body opposite side of ladder and handrail(s) horizontally below hosebed.	$1,174
3110-0222	Bolt-on 10" diamond plate tailboard (full width of rear compartment). Includes the enhanced extended side compartment frame work. For use with rear ladder application. Includes handrails (1) vertically mounted on trailing edge of body opposite side of ladder and horizontally mounted handrail(s) below hosebed.	$1,956
3110-0230	Bolt-on 10" tailboard (full width of body) aluminum smooth plate with black Scorpion coating (rough finish) IPOS diamond plate. For use with rear ladder application. Includes handrails- (1) vertically on trailing edge of body opposite side of ladder and handrail(s) horizontally below hosebed.	$1,174
3110-0238	Bolt-on diamond plate 18" tailboard (full width of body). For use with rear ladder application. Includes handrails- (1) vertically on trailing edge of body opposite side of ladder and handrail(s) horizontally below hosebed.	$1,704
3110-0243	Bolt-on diamond plate 16" tailboard (full width of body). For use with rear ladder application. Includes handrails- (1) vertically on trailing edge of body opposite side of ladder and handrail(s) horizontally below hosebed.	$1,643
3120-0419	Officer extruded half side tandem body with 74" wide forward and 34" wide rearward compartmentation.For use with wetside narrow tank application.	$5,025
3130-0003	Pump module. Includes 39" wide pump panel opening and running boards.	$4,825
3130-0012	Upper SM pump module with double stacked double crosslays and diamond plate storage pan.	$1,421
3130-0401	Crosslay double with dry lay. Includes (2) double stack crosslays to hold up to 200' of 2.0" DJ each and (1) dry lay to hold up to 200' of 2.5" DJ. Wetside tanker only.	$1,421
3130-0402	Pump module side mount with 33" wide pump panel opening. Includes dia plt running boards. Wetside tanker only.	$3,145
3130-0433	Crosslay double. Includes (2) double stack crosslays to hold up to 200' of 2.0" DJ each and a diamond plate cover over module to rear of crosslays. Wetside tanker only.	$1,341
3130-0434	Crosslay double. Includes (2) double stack crosslays to hold up to 200' of 2.0" DJ each and a diamond plate storage pan to rear of crosslays. Wetside tanker only.	$1,758
3130-0454	Upper SM pump module with double stacked double crosslays and diamond plate storage pan. Crosslay divider to be adjustable side to side.	$1,764
3130-0478	Pump module top mount with 39" wide pump panel opening and integral walkway (no compartments). Includes dia plt running boards. Wetside tanker only.	$4,095
3130-0479	Crosslay Triple. Includes (3) single stack crosslays to hold up to 200' of 2.0" DJ each. Wetside tanker only.	$1,341
3134-0006	The single gauge panel on the driver's side of the side mount module is to be hinged downward. Includes two (2) cable hold opens, and latches.	$130
3134-0011	Officer side pump panel to be vertically hinged on forward extrusion. Panel(s) to be secured in the closed position with push button latches. Upper panel to be held open with gas shock.	$484
3134-0097	Rearward area pump panel header panels for use with hinged panels (vertical and horizontal) and forward body/tank mounted lighting with poles.	$485
3134-0098	The driver side under mount pump panel to be stainless steel. Includes panel supports and hinged upper diamond plate top with hold-down.	$626
3134-0099	The driver and officer side under mount pump panel to be stainless steel. Includes panel supports and hinged upper diamond plate top (driver side) with hold-down.	$895
3134-0101	The driver side pump panel below tank to be painted Zolatone black. Wetside Tanker Only.	$411
3134-0102	The driver side under mount pump panel to be stainless steel. Includes panel supports and hinged upper diamond plate top (driver side) with hold-down. The officer side panel will be constructed of the same material as the body compartment.	$895
3134-0108	Booster reel rewind switch. Switch guarded half moon. Location on driver side upper pump display panel.	$27

3134-0109	Booster reel rewind switch. Switch guarded half moon. Location on driver side upper pump display panel.	$27
3134-0110	Gauge panel on the driver's side compartment top for under tank pump module. Panel is to be hinged downward. Includes two (2) cable hold opens, and latches. To include Fuel Gauge, Class 1 TPG Control, Suction and Pressure Gauges, Tank to Pump Switch, Tank Level Gauge and Guarded Hose Reel Switch. Panel to be painted Zolatone black. OKC Only.	$440
3136-0100	Notched Speedlay divider(s) on the both for connecting preconnect hoses. Notch to be 12"L X 4"H enough room to use a spanner wincher for connecting hoses.	$91
3136-0101	Diamond plate shield for under tank pump module on Wetside Tankers. Shield shall be mounted vertcally at the front of the module.	$309
3136-0104	The lower area of the under frame pump compartment to have a four (4) sided heat pan with two (2) removable (side to side) bottoms. Bottoms to be secured in the closed position with butterfly latches. Wetsides Only.	$976
3136-0106	One (1) pump compartment heater is to be mounted in the pump area. Locate as low as possible.	$674
3136-0127	The pump module storage pan shall be upgraded to include a hinged cover. The hinged cover shall be constructed of 3/16" embossed aluminum tread plate, include a grab handle, (2) butterfly latches and hold open device(s). The cover shall be included in the door ajar circuit and may be used a walking surface.	$497
3136-0133	Removable Poly Speedlay Tray(s). The floor of the tray(s) to be slotted to prevent the accumulation of water and allow for ventilation of wet hose.	$535
3300-0009	Door single vertically hinged diamond plate. Location(s): [#LOC]	$504
3300-0010	Door double vertically hinged diamond plate. Location(s): [#LOC].	$720
3300-0011	Door single horizontally hinged lift-up painted. Location(s): [#LOC]	$700
3300-0017	Door roll up short (up to 45") with satin finish ROM. Location(s): [#LOC].	$808
3300-0107	Pull down straps for lift-up door. Loc: [#LOC].	$99
3300-0198	Door single vertically hinged painted. (For use on products with integral driprail only) Location(s): [#LOC]	$687
3300-0199	Door single vertically hinged diamond plate. (For use on products with integral driprail only) Location(s): [#LOC]	$471
3300-0200	Door double vertically hinged w/rotary latches - painted. (For use on products with integral driprail only) Location(s): [#LOC]	$752
3300-0201	Door double vertically hinged w/rotary latches - diamond plate. (For use on products with integral driprail only) Location(s): [#LOC]	$672
3305-0007	Vinyl [#COL] hose bed cover with attached rear flap(s).	$829
3305-0008	Vinyl [#COL] crosslay cover with attached side flaps.	$291
3305-0167	Vinyl rear cover for diamond plate cover on pre-connect tray. Color: [#COL]	$92
3305-0175	Vinyl fire retardent [#COL] hose bed cover with attached rear flap(s).	$1,036
3305-0183	Vinyl [#COL] crosslay cover with attached side flaps with bungee cord.	$363
3305-0189	The rear flap(s) of the hosebed cover shall be upgraded to add weight to the bottom of the rear vertical flap(s).	$515
3305-0198	Diamond plate preconnect cover. Cover to attach to preconnect tray mounted on compartment top and protect preconnect discharge(s).	$400
3305-0212	Vinyl fire retardent [#COL] hosebed cover with twist locks fasteners and bungee cord attached rear flap(s). Cover to be partial hosebed cover leaving hosebed walkway area uncovered. To extend full length of the hosebed from roof top compartment on the side to divider against walkway in the middle and to hosebed storage pan rearward mounting flange at the front.	$1,339
3320-0005	SCBA Bottle Storage. (4) Cast Product SCBA bottle storage with gasketed doors. (2) each side in rear wheel well area.	$718
3330-0008	Handrail 12". Location [#LOC].	$111
3330-0079	Slide-out platform, rollerless. Includes chrome grab handle centered on the front face of the platform (includes hand rail as applicable for body mounted locations) and required step lighting. Located [#LOC].	$883
3330-0141	Access ladder with aluminum side rails and aluminum ribbed extruded steps for NFPA hosebed access and handrail mounted on upper hosebed side (as applicable). LED lighting provided and positioned to illuminate steps per NFPA. Ladder to be located [#LOC].	$1,104
3330-0165	Handrail 24". Location [#LOC].	$200
3330-0166	Handrail 12". Locations to be determined at pre-construction meeting.	$111
3330-0167	Intermediate rear step to be approximately 10" deep located above the rear Newton dump valve, and be of embossed aluminum treadplate.	$552
3330-0168	Slide-out platform, rollerless. Includes chrome grab handle centered on the front face of the platform (includes hand rail as applicable). Located under right side pump running board.	$1,311
3330-0170	Slideout platform-roller-less. Includes chrome grab handle and retaining pin, centered on the front face of the platform (includes handrail as applicable for body mounted locations) and required step lighting. Located: [#LOC].	$883
3340-0035	Divider Long. To run full length of hose bed (front to rear).	$490
3340-0093	Mud flaps, rear, black with E-ONE logo.	$161

3340-0107	Diamond plate tandem axle wheel well. Includes bolt-on composite wheel well liners and fenderettes.	$2,217
3340-0145	Rubrail for the body and pump area module(s).	$746
3340-0319	Bolt-on diamond plate 10" tailboard (full width of body). For use with rear ladder application. Includes handrails-(1) vertically on trailing edge of body opposite side of ladder and handrail(s) horizontally below hosebed.	$894
3340-0408	Adjustable ladder brackets. Locate in adjustable track [#LOC].	$485
3340-0409	Adjustable tracks (pair). Locate tracks to [#LOC] assembly. For use with ladder and/or hard suction rack(s).	$191
3340-0494	Rubrail for the body.	$746
3340-0523	Hosebed area above booster tank. Includes raised sides and front of water tank, slatted flooring and adjustable divider extrusions.	$2,659
3340-0524	Hosebed area above booster tank. Includes raised sides and front of water tank, slatted flooring and adjustable divider extrusions.	$4,033
3340-0546	A bolt-on preconnect storage area to be provide to the driver side upper tank area. To include aluminum sides and front (notched for discharges), (2) dividers (notched for nozzle) with handhold cut-outs. Storage from driver to officer (double stacked) : 200' of 1.75" DJ/ 200' of 1.75" DJ/ 200' of 2.5" DJ. Storage area depth to be approximatley 8.75" deep to the dri-deck flooring.	$1,324
3340-0551	Diamond plate hose storage box located on driver side compartment top. Includes lift-up door for easy access from the ground. Tray to sized for 150' of 2.50" hose (deadlay).	$2,266
3340-0552	Double pre-connect tray on top of the drivers side compartment top offset to the rear. Tray to be "U" shape to hold 200' of 1.75" DJ (each). Includes hinged diamond plate cover.	$1,404
3340-0587	Slip-on stainless steel dump elbow and 36" straight extension chute. Includes body mounted removable support arm and mounting brackets at rear of body for elbow and straight chute.	$1,660
3340-0588	Slip-on painted steel dump elbow and 36" straight extension chute. Includes body mounted removable support arm and mounting brackets at rear of body for elbow and straight chute.	$1,282
3340-0604	Diamond plate hose storage box. Locate on driver side compartment top. Box to include removable flooring and a diamond plate drop down door with d-ring latch(s). Rubber stops will be provided ipo chains.	$1,404
3340-0608	Hosebed area above booster tank. Includes raised sides and front of water tank. No hosebed slats in hosebed.	$1,640
3340-0609	Guard Booster Reel. There shall be an expanded metal guard provided for booster reel mounted below body between frame rails to prevent booster reel hose from falling below the truck.	$544
3340-0610	Full width partition/channel located in hosebed rearward of the fill tower(s). Channel shall be approximately 6" wide x 2" high and located 106" from the rear of the truck. See photos on file.	$447
3340-0611	Body will have (2) additional compartments, (1) each side behind the rear wheels. Doors to match material of forward doors. Wetsides.	$1,233
3340-0612	Diamond plate shield over electrical items mounted on extended box at upper rear of Wetside tank.	$95
3340-0618	Captive booster reel rollers mounted through center rear compartment face. Locate down low and size for width of reel assembly.	$385
3340-0619	Body will have (2) additional compartments, located (1) each side behind rear wheels. Narrow tank Wetside only.	$218
3340-0620	Body will have (2) additional compartments, located (1) each side behind rear wheels. Wide tank Wetside only.	$218
3340-0624	Box mounted on driver side rear compartment face to hold auto eject rectacle and battery charger display. Box to be angled downward at an approximate 15 degree angle.	$253
3340-0634	Double pre-connect tray on top of the drivers side compartment top offset to the rear. Tray to be "U" shape to hold 200' of 1.75" DJ (each). Includes black vinyl cover.	$1,404
3340-0642	Body will have (2) additional compartments, (1) each side behind the rear wheels.	$752
3340-0643	Stainless steel trim for lower edge of rear mudflap (PR). The trim shall be 2" in height and go full width of the mudflap. The material shall be "polished" stainless steel and it will be mounted to the lower edge of the rear (back side) of the mudflaps.	$311
3340-0652	Stainless steel trim for lower edge of front mudflap (PR). The trim shall be 2" in height and go full width of the mudflap. The material shall be "polished" stainless steel and it will be mounted to the lower edge of the rear (back side) of the mudflaps.	$311
3340-0653	Diamond plate tandem axle wheel well. Includes bolt-on composite wheel well liners and bolt-on polished alum fenderettes.	$2,012
3340-0669	Rubrail for the body (sides only, serrated surface facing down).	$554
3340-0670	Double pre-connect tray on top of the drivers side compartment top offset to the rear. Tray to be "U" shape to hold 200' of 1.75" DJ (each). Includes cover to protect preconnects and hinged smooth plate cover for hose. Tray and covers to be painted job color.	$1,561
3340-0674	There shall be a metal plate mounted to the side of the driver side compartment top mounted preconnect tray to assist in the application of the NFPA stripe.	$166
3340-0678	Double pre-connect tray on top of the drivers side compartment top offset to the rear. Tray to be "U" shape to hold 200' of 1.75" DJ (each). Includes red vinyl cover.	$1,404

3340-0684	Body compartment interiors to have Zolatone gray finish. To include pan of hinged doors (as applicable). Does not include floors if they are dia plt. Wetside Only.	$1,309
3340-0700	Body will have (2) additional compartments, (1) each side behind the rear wheels below side dumps. Includes a vertically hinged diamond plate door with thumb latch.	$752
3340-0714	Bolt-in floor [#LOC]. Floor is in addition to the existing DP floor. Floor to have 2" raised forward area (tapered towards rear for securing cribbing) and run full length front to rear.	$219
3340-0720	Slip-on painted steel dump elbow and 36" straight extension chute. Includes body mounted removable support arm and mounting brackets in compartment [#LOC] for elbow and straight chute.	$1,282
3340-0724	Diamond plate tandem axle wheel well. Includes fenderettes and bolt-on aluminum wheel well liners painted job color.	$2,217
3340-0741	Rubrail for the body (sides only, serrated surface facing up).	$554
3365-0183	Hard suction storage rack. Locate [#LOC]. Includes NFPA retaining strap(s).	$259
3365-0189	Manual drop-down portable tank storage rack. Includes forward and rearward securing clamps with manual releases. Locate rack to [#LOC] of body. Rack sized for steel framed [#COL] portable tank.	$1,825
3365-0230	Diamond plate storage area for up to (3) 5" x 10' hardsuction hoses (not included). Includes side facing access with a fixed forward panel, a side rearward swing door with mechanical latching (wired to door ajar) and (2) securing straps located inward front to rear. Storage to be located [#LOC]	$559
3365-0231	Diamond plate storage box for storage of a 2500 gallon portable water tank (not included). Includes drop down rear access door with push button latch (wired to door ajar). Box to be located [#LOC]	$559
3365-0233	Diamond plate storage area for a portable water storage tank (not included). Includes side facing access with a full width drop down door with mechanical latching (wired to door ajar). Storage located to [#LOC] of body. Sized for [#COL] steel frame portable tank.	$491
3365-0234	Diamond plate storage area for up to (3) 5" x 10' hardsuction hoses (not included). Includes rear facing access with a full width drop down door with mechanical latching (wired to door ajar). Storage to be located [#LOC]	$559
3365-0244	Pre-connect storage box with hinged full length lid. Includes center divider and storage for (2) 1.75" DJ hose (200' each) with black dri-deck flooring and red vinyl end flap with hold-downs.	$673
3365-0247	Horizontal ladder bracket installed on officer side of hosebed. Will include aluminum boot and ladder hold down. Ladder Compliment: [#LOC].	$256
3365-0270	Stainless steel scuff plate mounted full height of tank to protect paint from hard suction handles. Located at each end of hard suction hose.	$234
3365-0273	Horizontal ladder bracket installed on driver side of hosebed. Will include aluminum boot and ladder hold down. Ladder Compliment: [#LOC].	$256
3365-0275	Hard suction storage rack for (1) 6" X 14' suction hose. Locate [#LOC]. Includes NFPA retaining strap(s).	$394
3365-0294	There shall be a metal plate mounted to the side of the portable tank rack to assist in the application of the NFPA stripe.	$166
3365-0295	Manual drop down portable tank storage rack. Includes forward and rearward securing clamps with manual releases. Locate rack to [#LOC] of body. Rack sized for an aluminum framed [#COL] portable tank.	$1,825
3365-0315	Zico drop down rack to have smooth plate cover between outboard rack assemblies. Rack and cover to be painted job color, includes painting of the actuator covers.	$1,520
3365-0334	Ladder Storage Box. Located in the officer side hosebed. The top shall be enclosed using the hosebed cover, the rear access shall be included in the vinyl rear flap as part of the hose bed cover (hinged door not included), The hosebed cover and rear flap shall be sold separately. Box to hold (1) Alcolite PEL 24' 3-section, (1) Alcolite PRL 12' roof, (1) Alcolite FL 10' attic ladder, (2) backboards and (2) pike poles.	$2,713
4000	**Pumps/Tanks**	
4005-0013	Hale QFLO 750-1250 GPM pump, single stage.	$22,730
4005-0136	Hale MBP PTO driven pump. Includes driver side 5" intake with cap (shipped loose). Capacity of 750GPM/2839LPM. For use with Wetside Tanker only.	$14,651
4005-0144	Hale AP PTO driven pump. Includes driver side 5" intake with cap (shipped loose). Capacity of 500GPM/1892LPM. For use with Wetside Tanker only.	$12,941
4005-0145	Hale MBP PTO driven pump. Includes driver side 6" intake with cap (shipped loose). Capacity of 1000GPM/4000LPM. For use with Wetside Tanker only.	$15,269
4005-0146	Hale MBP PTO driven pump for use with under tank mounting. Includes driver side 5" intake with cap (shipped loose). Capacity of 750GPM/2839LPM. For use with Wetside Tanker only.	$14,651
4005-0157	Waterous CL PTO driven pump. Includes driver side 5" intake with cap (shipped loose). Capacity of 500GPM/1892LPM. For use with Wetside Tanker only.	$13,586
4010-0134	3000 gallon wide Wetside water tank. Tank capacity is 3000 US gallons / 2498 Imperial gallons / 11356 Liters. For use with single rear tank dump.	$13,312
4010-0135	2000 Gallon wide Wetside water tank. Tank capacity is 2000 US gallons / 1665 Imperial gallons / 7570 Liters.	$20,993

4010-0137	3000 gallon narrow Wetside water tank. Includes offset forward officer side integral SCBA storage compartment. Tank capacity with compartment is 3000 US gallons / 2498 Imperial gallons / 11356 Liters.	$13,788
4010-0139	3000 gallon narrow Wetside water tank. Tank capacity is 3000 US gallons / 2498 Imperial gallons / 11356 Liters. For use with single rear tank dump.	$14,368
4010-0142	3000 gallon narrow Wetside water tank for 6X6 chassis. Tank capacity is 3000 US gallons / 2498 Imperial gallons / 11356 Liters. For use with single rear tank dump.	$14,368
4010-0151	Tank 3000 gallon Wetside. Note: Any foam cell(s) and/or storage options in tank will reduce the overall water capacity. Tank capacity is 3000 US gallons / 2498 Imperial gallons / 11356 Liters.	$24,122
4010-0153	Tank 2000 gallon Wetside. Note: Any foam cell(s) and/or storage options in tank will reduce the overall water capacity. Tank capacity is 2000 US gallons / 1665 Imperial gallons / 7571 Liters.	$17,343
4015-0007	Pump cooler, 1/4" valve with 3/8" tubing.	$162
4015-0018	Valve Inlet MIV-E - Hale. Location: [#LOC].	$3,336
4015-0142	Pump&Roll kit. To include Digital Master pressure gauge. Mini tank level, Tank to pump control, Switches in cab, and Preset discharge pressure relief valve.	$2,887
4015-0159	Valve Inlet MIV-E - Hale. Location: [#LOC].	$3,336
4015-0164	Factory Pump Test.	$458
4015-0166	Pump cooler, automatic with 3/8" tubing. Include a check valve that is install between the pump discharge and tank that will automatically close when drafting.	$139
4015-0175	Additional control and air bleeder for the MIV-E to provide controls at: [#LOC].	$536
4020-0004	Newton dump mounting plate.	$543
4020-0019	Rear tank dump. Includes stainless steel assembly with manually actuated valve on top of dump assembly. For use with slip on extension and chute.	$1,607
4020-0022	Rear tank dump. Includes stainless steel assembly with manually actuated valve on top of dump assembly. Includes integral swivel chute with manual extension.	$4,791
4020-0039	Rear tank dump. Includes painted steel assembly with electric actuated valve and integral electric extension chute.	$3,530
4020-0043	Slip-on mild finish dump extension and chute. Includes (1) rear body mounted removable support arm bracket and tailboard mounted storage tray (lower step directly below dump) with retaining straps.	$1,317
4020-0044	Slip-on stainless steel dump extension and chute. Includes body mounted removable support arm bracket and tailboard mounted storage tray (opposite side of NFPA upper access step/ladder) with retaining straps.	$1,703
4020-0048	Recessed SCBA storage compartment located officer side of tank offset forward of fold-a-tank rack. Storage compartment shall be equipped with aluminum smooth plate double doors painted job color with drip rail. Interior will include tracking on side and rear walls for mounting of equipment.	$669
4020-0051	Speedlay provision in tank. Located at front of tank to accomodate (2) hose trays. Includes provision for plumbing to be located on driver side above trays. Trays to hold 200' of 1.75" DJ. Wetside only.	$1,645
4020-0052	Hosebed partition "L" shape. Locate at rear of hosebed, centered side to side, extend 106" forward and taper at 90 degrees to driver hosebed side wall. Partition to be poly and integral to the tank. See photos on file.	$644
4020-0053	Tank sump box (1) each side behind rear wheels for newton dump mounting. Wetside Tanker Only.	$620
4020-0054	Rear tank dump. Includes painted steel assembly with electric actuated valve on top of dump assembly. Includes integral swivel chute with manual extension.	$4,830
4020-0055	Switch guard half moon. Locate on electrical Newton dump and Newton dump ext chute switches.	$27
4020-0058	Recessed SCBA storage compartment located driver side of tank offset forward. Recess will include tracking on side and rear walls for mounting of equipment. Does not include door. Wetside Only.	$290
4020-0059	Rear tank dump. Includes painted steel assembly with electrically actuated valve. For use with slip on extension and chute.	$1,876
4020-0060	Tank sump box (1) each side centered above rear wheels for newton dump mounting. Wetside Tanker Only.	$620
4020-0061	Recessed SCBA storage compartment located officer side of tank offset forward. Recess will include tracking on side and rear walls for mounting of equipment. Does not include door. Wetside Only.	$290
4405-0089	Booster Reel. Reel to have capacity of 200' of 1" (not included). Locate under rear body. Includes rewind switch.	$2,842
4405-0091	Booster reel skid plate. For use with booster reel mounted between frame rails.	$451
4405-0099	Booster Reel. Reel to have capacity of 200' of 1" (not included). Locate under rear body. Includes electric rewind foot switch offset to the officer side of B1 compartment.	$2,842
4415-0012	1.5" crosslay with Akron manual valve. Location: [#LOC].	$951
4415-0014	2.5" Left Pump Panel Discharge Akron Manual Valve. Location: [#LOC].	$991
4415-0016	2.5" Right Pump Panel Discharge Akron Manual Valve. Location: [#LOC].	$1,102

4415-0028	2.5" Right Rear Discharge Akron Manual Valve. Location: [#LOC].	$1,158
4415-0041	3" Deck Gun Discharge, Akron manual valve.	$1,625
4415-0161	2.5" Left Panel Discharge Akron Manual Valve w/30 Degree Droop. Location: [#LOC].	$1,245
4415-0164	2.5" Right Panel Discharge Akron Manual Valve w/30 Degree Droop. Location: [#LOC].	$1,245
4415-0165	3" Right Panel Discharge Akron Manual Valve w/30 Degree Droop. (Waterous pumps noted if location is forward of steamer use lower discharge port.) Location: [#LOC].	$1,903
4415-0872	Pair of 1.5" preconnect discharges with Akron manual valves. For use with Wetside tank with upper tank/hosebed pre-connect storage. All exposed piping along forward area of tank to be painted black. Plumbing to terminate with 1.5" MNST threads to the driver side of the tank/hosebed.	$2,242
4415-0873	Provide a 1.5" port connection (with removable cap) on the main manifold for use with a dealer installed ground spray system. Dealer will make all required connections and controller applications.	$168
4415-0875	Pair of 1.5" preconnect discharges with Akron manual valves. For use with narrow Wetside tank with driver side compartment top pre-connect storage. Plumbing to terminate with 1.5" MNST threads.	$2,172
4415-0925	All Discharge/Intake caps, and plug to be Kochek brand and Powder coated. Color; White.	$581
4415-0938	2.5" Left Pump Panel Discharge Akron Manual Valve. w/Chrome plated valve face. Location: [#LOC].	$1,118
4415-0939	2.5" Right Pump Panel Discharge Akron Manual Valve. w/Chrome plated valve face. Location: [#LOC].	$1,118
4417-0138	Officer side pump panel shall have polished stainless steel split escutcheon plates mounted in place for each discharge/intake. The escutcheon plates will be fastened in place to allow quick disassembly to permit the hinge to operate.	$236
4435-0001	Class 1 Intelli-Tank water tank level gauge.	$475
4435-0015	2.5" Class 1 compound pressure gauge (30-0-600). Discharge(s): [#LOC].	$134
4435-0047	Class 1 Tank Level Intel Water Gauge, Additional. Location: [#LOC].	$546
4435-0092	2.5" Class 1 compound pressure gauge (30-0-400). Discharge: [#LOC].	$134
4435-0094	Class 1 4-1/2" compound pressure gauge (30-0-400 PSI).	$188
4435-0189	Class 1/Whelen PSTank water tank level gauge package. Includes ITL-40M on pump operator's panel, mini gauge in cab and (3) Whelen PSTANK lights. Location of Whelen PSTANK lights: (1) driver side up high on tank offset rearward of forward scene light, (1) officer side up high on tank offset rearward of forward scene light and (1) at rear up high.	$2,562
4435-0193	2.5" Class 1 compound pressure gauge (0-400). Discharge: [#LOC].	$134
4435-0200	2.5" Class 1 pressure gauge (0-600). Discharge: [#LOC].	$130
4435-0207	Class 1/Whelen PSTank water tank level gauge package. Includes ITL-40M on pump operator's panel, and (3) Whelen PSTANK lights. Location of Whelen PSTANK lights: (1) driver side up high on tank offset rearward of forward scene light, (1) officer side up high on tank offset rearward of forward scene light and (1) at rear up high.	$2,057
4435-0215	Class 1 4-1/2" compound pressure gauge (30-0-400 PSI). Locate Auto Fill Inlet.	$188
4440-0005	2.5" Left Intake Akron Manual Valve.	$1,079
4440-0006	2.5" right intake Akron manual valve.	$1,079
4440-0138	2.5" right intake Akron manual valve with chrome plated end.	$1,126
4440-0140	2.5" right intake Akron manual valve, located rear of steamer IPO standard location.	$1,079
4445-0009	Intake relief valve, Akron.	$447
4450-0011	2.5" tank fill Akron manual valve.	$1,147
4450-0105	3" Tank Fill Akron Manual Valve	$1,509
4450-0119	3" tank to pump Akron manual valve w/4" plumbing.	$1,150
4450-0121	3" Tank To Pump Akron Air Actuated Valve w/4" Plumbing.	$1,581
4450-0149	2.5" rear direct tank fill. Includes swing handle control, swivel with droop and cap with retainer. Located to [#LOC] of the rear body.	$1,197
4450-0165	3" rear direct tank fill. Includes swing handle control, swivel with droop and cap with retainer. Located to [#LOC] of the rear body.	$1,402
4450-0169	4" rear direct tank fill. Includes handwheel control, with 5" Swivel Storz elbow and cap. Located to [#LOC] off rear of body	$2,911
4450-0171	2.5" rear direct tank fill. The 2.5" direct water tank fill connection shall include an inlet strainer, a 2.5" FNST chrome inlet swivel, w/double male nst adapter and a chrome cap with cable. [#LOC] of the rear body.	$1,197
4450-0172	4" Direct Tank Inlet/Outlet w/4" Elect Valve. Include 4" plumbing, strainer and terminate with 4"FNST X 5" storz adapter w/cap. Location at left side pump panel.	$4,108
4450-0189	Rear tank dump. Includes stainless steel assembly with manually actuated valve on top of dump assembly. Includes integral 6001 swivel chute with manual telescopic extension and two locks one each side.	$5,054
4450-0192	Rear tank dump. Includes stainless steel assembly with electrically actuated 1070 dump valve. Includes integral swivel chute with manual extension.	$6,700
4450-0195	Rear tank dump. Includes stainless steel assembly with manually actuated valve on top of dump assembly with quick release pin to allow for folding down handle. Includes integral swivel chute with manual extension.	$4,790

4450-0199	Reverse push/pull handle on 3" tank to pump Akron manual valve. The "in" position will be open and the "out" position will be closed.	$53
4460-0067	Officer side pump panel shall include an access door to provide access to the cab tilt switch and manual jack as mounted.	$190
4465-0011	Class 1 TPG pressure governor. Includes, water, oil, volt and tachometer.	$2,186
4465-0020	Class 1 TPG Plus pressure governor. Includes master intake and discharge gauges, water, oil, volt and tachometer.	$2,919
4475-0000	Pump certification 750-2250 GPM	$2,514
5000	**Electrical**	
5010-0002	Multiplex electrical system for pumper / tanker / rescue.	$3,396
5010-0014	Vehicle data recorder for commercial cab - 2009 NFPA compliant. Includes occupant detection with display. Display location: [#LOC].	$1,439
5010-0053	Vehicle data recorder for commercial cab - 2009 NFPA compliant. Includes occupant detection shown in multiplex display.	$921
5010-0055	Vista IV display for V-MUX electrical system. Location: [#LOC].	$1,771
5010-0056	Mounting arm for driver's multiplex display in cab (6").	$214
5010-0059	VFD Text display for V-MUX electrical system. Location: [#LOC].	$771
5100-0036	Additional programming instructions: [#LOC].	$119
5100-0077	Switch, additional 12 volt/15 amp (PR). Location and function: Center console labeled "Left Nozzle" and "Right Nozzle" for use with dealer installed ground spray system. Dealer to make all fianl connections and functional testing of switching.	$221
5110-0017	Back-up alarm 97 dB.	$99
5150-0017	License plate light LED with chrome housing located at the rear of the body.	$132
5150-0022	Marker light LED body package. Commercial pumper bodies only.	$784
5150-0023	Weldon Model 1010 LED / incandescent tail lights. Includes red LED stop/tail, amber LED turn and clear incandescent back-up.	$538
5150-0032	Bracket license plate at rear of body.	$38
5150-0050	Zico backing lights (PR) with polished stainless steel housing model #ZQL-SS-H7614. Location: [#LOC].	$599
5150-0111	Weldon Model 7" 1010 red LED stop/tail, amber LED turn and clear LED (9186-5586) back-up.	$802
5150-0112	Marker light LED body package. Commercial pumper Wetside tanker bodies only.	$685
5150-0130	License plate light LED with chrome housing located at the rear of the body driver side down low.	$132
5150-0133	License plate light LED with chrome housing located at the rear of the body below B1 entry door.	$132
5150-0134	License plate light incandescent with chrome housing located at the rear of the body.	$132
5300-0092	Light bar Whelen Freedom model FN55QLED 55" LED with takedown lights and MKEZ7 mounts. Location: Centered on the front cab roof.	$3,720
5300-0240	Whelen Justice model JE2NFPA 56" with MKEZ7 mounts. All LED (forward facing) light bar.	$637
5300-0305	Light bar Whelen Freedom model FN55QLED 55" LED with driver red/officer blue LEDS, takedown lights and MKEZ7 mounts. Location: Centered on the front cab roof.	$3,720
5300-0329	Light bar Whelen Freedom model FN55QLED 55" LED with driver red/officer blue LEDS, takedown lights and MKEZ7 mounts. Location: Centered on the front cab roof.	$3,720
5300-0341	Whelen Justice model JE2NFPA 56" with MKEZ7 mounts. All LED (forward facing) light bar.	$637
5350-0001	Camera back-up Safety Vision LCD model SV-CLCD70BA-625B with audio. For use with up to 2 cameras.	$2,038
5350-0060	Diamond plate camera shield.	$208
5350-0158	Camera back-up Safety Vision LCD model SV-CLCD70B-625B with audio. Located in cab dash on bracket (see photos).	$2,038
5350-0169	Camera back-up Safety Vision LCD model SV-CLCD-64-810 with lens shutter that opens when the unit is put in reverse.	$2,108
5350-0181	Camera back-up Safety Vision LCD model SV-CLCD70BA-620A with audio. For use with up to 2 cameras.	$2,188
5350-0192	Safety Vision back-up camera wired through multiplex display. Video displays automatically when transmission is in reverse. Camera only - does not include monitor.	$891
5380-0008	Compartment light package incandescent for small bodies.	$496
5380-0011	Compartment light package LED for small bodies.	$1,769
5380-0027	Ground light package for cab and body - small.	$461
5380-0030	Ground light package LED - small.	$1,505
5380-0198	Compartment light package ROM V3 LED (2) for Wetside tanker. Includes one 12" light per compartment.	$256
5380-0199	Compartment light package ROM V3 LED (4) for Wetside tanker with optional rear side compartments. Includes one 12" light per compartment.	$510
5380-0200	Ground light package EON LED - small.	$857
5380-0201	Ground light package EON LED - medium.	$1,061
5380-0205	Cab step lighting package. Includes (2) EON LED lights per side.	$234
5380-0206	Cab step lighting package. Includes (4) EON LED lights per side.	$467
5380-0211	Compartment light package ROM V3 LED (4) for Wetside tanker with optional rear side compartments. Includes one 18" light per compartment.	$672

5390-0000	Deck light - Unity 12 volt (PR). Location: [#LOC].	$364
5390-0001	Hose bed light Unity. Locate at front area of hose bed. Switched with work light switch in cab.	$176
5390-0003	Hose bed light Truck-Lite. Locate at the front area of the hose bed. Switched with work light switch in cab.	$105
5390-0007	Deck/scene light circuit wiring through chassis reverse. Requires rear deck or scene light.	$76
5390-0008	Federal Signal GH scene lights (PR). Switch in cab (driver and officer side facing lights switched separately). Locate [#LOC].	$428
5390-0022	Crosslay light Truck-Lite. Locate to rear of crosslay (SM) and forward of crosslay (TM as applicable). Switched with work light switch in cab.	$105
5390-0024	Deck Light - Truck-Lite (PR). Location: [#LOC].	$315
5390-0115	Whelen 600 series gradient Super-LED scene lights (6). Switch in cab (driver and officer side lights switched separately). Lights located (2) each side of body up high (offset forward and rearward) and (2) at rear of body up high. Wetside only.	$1,973
5390-0132	Warning light Federal Signal QL64-BACKUP (PR) white with clear lens. Surface mounted with bezel. Location: [#LOC]	$603
5390-0133	Deck light - Unity 12 volt LED (PR). Location: [#LOC].	$994
5390-0134	Whelen M9 series Super-LED scene lights (6). Switch in cab (driver and officer side lights switched separately). Lights located (2) each side of body up high (offset forward and rearward) and (2) at rear of body up high. Wetside only.	$3,607
5390-0144	Unity deck light with model TP-1-I internal pull-up pole. Includes switch on lighthead and driver side overhead console. Location: [#LOC].	$584
5400-0003	Engine compartment light (EA).	$123
5400-0005	Pump panel LED light package with (2) Whelen strip lights per side pump panel. Not available on panels over 45" wide. Side mount only.	$784
5400-0010	Incandescent pump compartment light (EA).	$133
5400-0011	LED pump compartment light (EA).	$361
5400-0031	Pair of Cab Dome Large Lights mounted driver and officer side front. N/A on E-One Chassis. Required on Comm Chassis.	$74
5400-0047	Pump panel light package with (3) lights per side pump panel. Pump panels over 45" may require additional lights. Side mount only.	$631
5400-0141	Under mount side mount pump panel LED lighting. Includes (3) pump panel lights.	$298
5400-0142	Under mount side mount pump panel LED lighting. Includes (4) pump panel lights (3 driver and 1 officer).	$397
5400-0143	Pump panel LED light package for side mount. Includes (3) Tecniq EON lights with S/S housings. Includes S/S light shield. Wetside only.	$298
5400-0145	Pair of Cab Dome Large Lights mounted driver (clear) and officer (red) side front. N/A on E-One Chassis. Required on Comm Chassis.	$74
5400-0150	Pump panel LED light package for side mount. Includes (6) Tecniq EON lights with S/S housings located (3) ea side. Includes S/S light shields.	$374
5400-0151	Pump compartment light EON LED. Wired to work light.	$215
5400-0152	Pump compartment light EON LED. Includes switch on pump operator's panel.	$215
5400-0153	Right side discharge panel LED light Tecniq EON with S/S housing. Wetside only.	$63
5400-0160	Pump panel LED light package for side mount. Includes (3) Tecniq EON lights with S/S housings. Includes Zolatone black light shield. Wetside only.	$298
5400-0165	Pump compartment light EON LED. Light shall be switched from the cab dash with the work light switch.	$215
5400-0168	Whelen LED pump compartment light (EA).	$274
5400-0169	Pump panel LED light package for top mount. Includes (10) Tecniq EON lights with S/S housings located (3) ea side and (4) for top mount panel. Includes S/S light shields.	$634
5400-0170	Compartment light EON LED. Includes activation switch. Location of light and switch: [#LOC].	$215
5400-0175	Compartment light EON blue LED. Includes activation switch. Location of light: [#LOC].	$215
5450-0144	Fire Research Evolution 12V LED scene light model FCA530-V15-SW-H with external push-up pole. Includes switch in cab accessible to driver. Location: [#LOC].	$2,289
5450-0157	Quartz light Fire Research Optimum 150W/12V model OPA530-HD15-SR-SW with side mount external pole. Includes individual switch in cab on center console. Location(s): [#LOC]	$2,037
5450-0160	Quartz light Fire Research Focus 300W/12V model FCA530-D30-SR-SW with side mount external pole. Includes switch accessible to driver. Location(s): driver and officer side, (1) each side on body offset forward.	$1,602
5470-0053	Receptacle inlet 110 VAC, L5-30 Amp twist lock with a [#COL] cover. Location: [#LOC].	$278
5500-0009	Federal PA300 electronic siren recessed mounted.	$690
5500-0017	Whelen model 295HFSM1 siren with mechanical siren tone and microphone. N/A in California.	$1,007
5500-0059	Whelen model 295SL100 siren with microphone (replaced 295HF100).	$865
5510-0029	Speaker, Federal Signal Dynamax ES100 with "E-ONE" grille through bumper. Location: [#LOC].	$535
5510-0033	Wheln UnderPro SA31I01P/D speakers with natural finish. Includes E-ONE supplied brackets (as required) for mounting under the driver and officer side non-extended front bumper.	$754
5510-0041	Speaker, Federal Signal Dynamax ES100. Location: [#LOC].	$535
5510-0045	Speaker, Federal Signal Dynamax ES100 with "E-ONE" grille. Location: [#LOC].	$535

5550-0128	Whelen Super LED lower level warning light package. Includes (6) red 600 LED light heads, (2) red LIN3 lights and (2) red 500 LED light heads w/chrome flanges. Locate side facing lights: [#LOC].	$2,824
5550-0172	Whelen Super LED lower level warning light package. Includes (4) red 600 LED light heads, (2) red LIN3 lights and (2) red 500 LED light heads w/chrome flanges. Locate side facing lights at forward most position and in wheelwell offset to the rear. Wetside Tanker Only.	$2,228
5550-0182	Whelen LED lower level warning light package. Includes (10) red LIN3 lights w/chrome flanges. Locate side facing lights: [#LOC].	$2,075
5550-0186	Whelen M Series Super LED lower level warning light package. Includes (8) red M6R LED light heads and (2) red M2R LED light heads. Locate side facing lights: [#LOC].	$3,146
5550-0198	Federal Signal level warning light package, IMPAXX LED. Includes (10) red model IPX302-4 w/ bezel (chrome). Locate side facing lights: [#LOC].	$2,136
5550-0199	Whelen Super LED lower level warning light package. Includes (6) red 600 LED light heads and (2) red 500 LED light heads w/chrome flanges. Locate side facing lights: [#LOC].	$2,259
5550-0200	Federal Signal QuadraFlare LED lower level warning light package. Includes (8) QL64XF-R LED light heads with bezels. Locate side facing lights: [#LOC].	$2,000
5550-0201	Federal Signal QuadraFlare LED lower level warning light package. Includes (6) QL64XF-R LED light heads with bezels (chrome) and (2) IMPAXX LED model IPX302-4 light heads with bezels (chrome). Locate side facing lights: [#LOC].	$2,240
5550-0202	Federal Signal QuadraFlare LED lower level warning light package. Includes (8) QL64XF-R LED light heads with bezels (chrome) and (2) IMPAXX LED model IPX302-4 light heads with bezels (chrome). Locate side facing lights: [#LOC].	$2,240
5550-0204	Whelen 600 series Super LED lower level warning light package. Includes (8) red LED light heads w/chrome flanges. Locate side facing lights: [#LOC].	$2,392
5550-0205	Whelen M6 Super LED lower level warning light package. Includes (8) red M6R LED light heads w/chrome flanges. Locate side facing lights: [#LOC].	$2,836
5550-0206	Whelen M6 Super LED lower level warning light package. Includes (6) red M6R LED light heads w/chrome flanges and (2) M2R LED light heads with chrome flanges. Locate side facing lights: [#LOC].	$2,622
5550-0207	Whelen Super LED lower level warning light package. Includes (5) red 600 LED light heads (1) blue 600 LED light head at rear officer side and (2) red 500 LED light heads w/chrome flanges. Locate side facing lights: [#LOC].	$2,865
5550-0213	Whelen Super LED lower level warning light package. Includes (6) red 600 LED light heads, (2) red LIN3 lights and (2) red 500 LED light heads w/chrome flanges and clear lenses. Locate side facing lights: [#LOC].	$2,824
5550-0222	Federal Signal QuadraFlare LED upper level warning light package. Includes (8) QL64XF-R LED light heads with bezels. Locate side facing lights: [#LOC].	$2,000
5550-0228	Whelen M Series Super LED lower level warning light package. Includes (8) red M6R LED light heads and (2) red M7R LED light heads. Locate side facing lights: [#LOC].	$3,146
5550-0233	Whelen Super LED lower level warning light package. Includes (6) red 600 LED light heads, (2) red LIN3 lights and (2) red 500 LED light heads w/chrome flanges. Locate side facing lights: [#LOC].	$2,824
5550-0243	Whelen M Series Super LED lower level warning light package. Includes (8) red M6R LED light heads and (2) red M7R LED light heads. Locate side facing lights: [#LOC].	$3,146
5550-0250	Whelen Super LED lower level warning light package. Includes (4) red 600 LED light heads, (4) red LIN3 lights and (2) red 500 LED light heads w/chrome flanges. Locate side facing lights: [#LOC].	$2,432
5600-0078	Whelen Super LED beacon (PR) model L31H with [#COL] domes. Location [#LOC].	$1,858
5600-0086	Whelen beacon model RB6T (PR) with [#COL] domes. Location: [#LOC].	$398
5600-0099	Warning light Whelen 600 series Super LED (PR) red. Location: [#LOC].	$600
5600-0284	Whelen Super LED beacon (PR) model L31H with blue driver, red officer LED and clear domes. Location [#LOC].	$1,858
5600-0290	Warning light Whelen 600 series Super LED (PR) red with diamond plate mounting boxes. Location: [#LOC].	$773
5600-0303	Whelen Super LED beacon (PR) model L31H with [#COL] domes. Location [#LOC].	$1,858
5600-0328	Warning light Whelen M7 series Linear Super LED (PR) white light with clear lens. Location: [#LOC].	$667
7000	**Loose Equipment**	
7700-0012	Hard suction hose 5" with Pyrolite couplings.	$762
7900-0008	Chrome Barrel Strainer 5".	$338
7900-0009	Strainer Bracket 5"	$96
7900-0014	DOT Required Drive Away Kit - Kit includes three (3) triangular warning reflectors with carrying case. This kit is for the end user and is to remain with the truck.	$28
7900-0191	3000 Gallon steel portable fold-a-tank. Ship with unit stored in storage tank rack.	$919
7900-0244	Removable Poly Speedlay Tray(s). The floor of the tray(s) to be slotted to prevent the accumulation of water and allow for ventilation of wet hose. Ship loose.	$535
8000	**Paint & Lettering**	

8100-0183	Paint Body - Large - For Aerials, T/A Tankers/Wetsides, Rear Mounts and Rescues. Sikkens paint. Color: [#COL].	$4,216
8100-0364	Paint tank - Small - For Wetside tankers products. Sikkens paint. Color: [#COL].	$3,113
8100-0365	Paint tank - Large - For Wetside tankers products. Sikkens paint. Color: [#COL].	$4,333
8100-0370	All applicable pump/pre-connect application modules to have a swirled finish (non-clear coated).	$722
8100-0398	Paint swivel chute job color.	$637
8100-0410	Black Durabak coating on pump master drain bracket.	$46
8200-0007	Sign Gold Letter (Each) - 3"	$12
8200-0022	Shade and outline for lettering.	$4
8200-0073	Sign Gold Letter (Each) - 3". Sign Gold to be small turn style.	$15
8300-0002	NFPA Scotchlite Stripe - 4" wide and straight on front/sides of cab and sides/rear of body. Color: [#COL]. Location: [#LOC].	$718
8300-0003	NFPA Scotchlite Stripe - 6" wide and straight on front/sides of cab and sides/rear of body. Color: [#COL]. Location: [#LOC].	$726
8300-0084	Chevron "A" style 6" printed sheet Scotchlite striping on rear of body. Includes rear facing extrusions, panels and doors inboard/outboard of the beavertails (if applicable). Colors to be [#COL].	$1,398
8300-0176	Chevron "A" style 6" printed sheet Scotchlite striping on rear of Wetside tank. Colors to be [#COL].	$1,100
8300-0177	Chevron "A" style 6" printed sheet Scotchlite striping on rear of Wetside body (on panels only - not tank). Colors to be [#COL].	$1,100
8300-0179	Chevron "A" style 6" printed sheet Scotchlite striping on rear of body. Includes rear facing extrusions, panels, inboard/outboard of the beavertails (if applicable). Does not include the rear door(s). Colors to be Yellow/Red.	$1,154
8300-0184	Special rear flag style chevron striping on rear of apparatus. Includes triangular area of blue Scotchlite (with white reflective stars) at top center with individual 6" red and white Scotchlite stripes at a 45 degree angle on remaining area (sloping down from left to right). Ref photo of SO 134676.	$1,961
8300-0185	Chevron "A" style 6" printed sheet Scotchlite striping on rear of Wetside body and tank. Colors to be [#COL].	$1,756
8300-0187	Chevron "A" style 6" 3M "Diamond Grade" striping on rear of rear of Wetside tank. Colors to be [#COL].	$2,058
8300-0188	Chevron "A" style 6" 3M "Diamond Grade" striping on rear of Wetside body (on panels only - not tank). Colors to be [#COL].	$2,058
8300-0214	Chevron "A" style 6" printed sheet Scotchlite striping stitched to vinyl hosebed cover end flap. Colors to be [#COL].	$432
9000	**Delivery / Warranty / Service**	
9300-0009	Manuals, Operator and Service CD-ROM.	$334
9300-0017	Manuals Printed (Set).	$874

Notes:

1) Availability of options are limited by other options selected, and not all options are available in every chassis/apparatus configuration. Selection of an option may require several of the above parts/items to complete the option package.

2) Certain options, alone or in combination with other options, may require heavier axle/suspension packages, longer frames, or reinforced frames at additional cost per the above price list.

3) To configure options, the E-One State Term Schedule authorized dealer will use quote configuration software to select the components necessary to effect the option, feature, or configuration requested and quote the total option price.