Fire Apparatus Quotation for:
STATE OF OHIO TERM SCHEDULE

Quotation Number: 70720 Rev: 27

Unit Description: PMPR-COMM
Quote Description: Pumper, Commercial Chassis

| Salescode | Extended Description | Qty |
|---|---|---|
| **TESTING COMPLIANCE STANDARD** | | |
| 1001-0065 | The E-ONE supplied components of the vehicle shall meet the requirements of NFPA 1901, 2016 edition. | 1 |
| 3090-0002 | OAH. Unit has no overall height restrictions. | 1 |
| 3090-0004 | OAL. Unit has no overall length restrictions. | 1 |
| 3090-0007 | Hosebed hoseload allowance on the apparatus shall be 1200 lbs. | 1 |
| 3340-1137-12B | Equipment allowance on the apparatus shall be 2000 lbs. This allowance is in addition to the weight of the hoses and ground ladders listed in the shop order as applicable. | 1 |
| **CHASSIS PREP** | | |
| 1020-0011 | Comm Chas Prep E-1 Supp-Non FL. International | 1 |
| **FRAME ASSEMBLY** | | |
| 1250-0011 | Rear underbody support frame. | 1 |
| **AXLE OPTIONS** | | |
| 1025-0042 | Front axle for commercial chassis 12,000 lb. rating. | 1 |
| 1025-0046 | Rear axle for commercial chassis 23,000lb rating | 1 |
| **WHEEL OPTIONS** | | |
| 1050-0007 | Front axle wheel trim kit. Includes stainless steel lug nut covers (chrome plated plastic if applicable) and center cap with E-ONE logo. Note: Center cap will have an inspection port IPO a logo if equipped with Stemco oil seals. | 1 |
| 1050-0008 | Rear axle (single) wheel trim kit. Includes stainless steel lug nut covers (chrome plated plastic if applicable) and center cap with E-ONE logo. E-ONE custom chassis w/steel wheels will have chrome plated plastic lug covers. | 1 |
| **TIRE OPTIONS** | | |
| 1060-0117 | RWC AirGuard LED tire pressure monitoring valve stem caps (6) for single rear axle applications. | 1 |
| **AIR SYSTEM OPTIONS** | | |
| 1110-0010-277 | Air inlet. To charge brake system. Commercial chassis only. Location: driver's door step area. | 1 |
| 1110-0065 | Dual Grover hood mounted air horns with driver and officer foot switches to be supplied and installed by Navistar. | 1 |
| **ENGINES & TRANSMISSIONS** | | |
| 1200-0126 | Chassis speed to be electronic limited and not to exceed a maximum of 68 MPH. Note: Speed rating may be lower based on OEM tire ratings/top speed limitations provided on chassis. | 1 |
| 1200-0296 | International N9 engine, 330 HP SCR. | 1 |
| **CHASSIS OPTIONS** | | |
| 1680-0011 | Tow eyes rear below body, painted. | 1 |
| 1680-0078 | Tow hooks front OEM. Not available with extended E-ONE installed front bumper. Tow hooks are OEM supplied with chassis. | 1 |
| 1680-0235-R01 | The batteries to be located under left hand side of cab. | 1 |
| 1680-0323 | Diamond plate trim package for a (4) door International. Includes a full length driver side and officer side trim that will utilize pieces already supplied by the OEM. For International cabs with SCR and | 1 |

| | | |
|---|---|---|
| | DEF. | |
| **CAB MODEL** | | |
| 1500-0011 | Four door Navistar 4400 4x2. | 1 |
| **CAB BADGE PACKAGE** | | |
| 1610-0000 | Cab and body to have applicable E-ONE logos. | 1 |
| **CAB DOOR OPTIONS** | | |
| 1550-0059-000-G6 | Reflective Red/Lemon Yellow printed striping positioned in the "A" formation located on the cab door panels. | 1 |
| **MISC EXTERIOR CAB OPTIONS** | | |
| 1675-0007 | Diesel fuel only label. | 1 |
| **SEATS** | | |
| 1510-0151 | Universal air pack bottle bracket installed (EA). | 4 |
| 1685-0032 | Seating capacity tag of five occupants. | 1 |
| **CAB ELECTRICAL OPTIONS** | | |
| 1750-0024-277-04 | Auto-Eject receptacle inlet 20 amp located driver's door step area with a Yellow cover. | 1 |
| 1750-0343 | Battery charger E-ONE LPC 20. 120 volt inlet, 20 amp output. | 1 |
| **BODY COMPT LEFT SIDE** | | |
| 3100-0112 | Driver side body with full height 36" wide forward and 50" wide rearward enhanced extended compartmentation. Includes (1) 56" wide compartment over the wheel well. | 1 |
| **BODY COMPT RIGHT SIDE** | | |
| 3120-0013 | Officer half side body with 36" wide forward and 50" wide rearward enhanced extended compartmentation. Includes adjustable ladder tracks and ladder brackets. | 1 |
| **BODY COMPT REAR** | | |
| 3110-0005 | Full Height Rear Compartment. Includes smooth plate panels. | 1 |
| 3110-0035 | Upper rear compartment depth to be approximately 25" deep. | 1 |
| 3340-0083 | Bolt-on diamond plate tailboard (full width of rear compartment). Includes the enhanced extended side compartment frame work with diamond plate compartment tops, (1) officer side lower area folding step. Driver side includes (1) upper hosebed mounted handrail (as applicable) and handrails-(2) vertical on trailing edge of body and horizontal mounted handrail(s) below hosebed. | 1 |
| **DOORS** | | |
| 3300-0017-004 | Door roll up short (up to 45") with satin finish ROM. Location(s): L2. | 1 |
| 3300-0017-015 | Door roll up short (up to 45") with satin finish ROM. Location(s): R1. | 1 |
| 3300-0017-016 | Door roll up short (up to 45") with satin finish ROM. Location(s): R2. | 1 |
| 3300-0019-003 | Door roll up tall (greater than 45") with satin finish ROM. Location(s): L1. | 1 |
| 3300-0019-005 | Door roll up tall (greater than 45") with satin finish ROM. Location(s): L3. | 1 |
| 3300-0019-027 | Door roll up tall (greater than 45") with satin finish ROM. Location(s): B1. | 1 |
| **SHELVES** | | |
| 3370-0025-099 | Shelf, permanent shelf. Locate in L1 at offset (above extrusion if applicable). | 1 |
| 3370-0025-100 | Shelf, permanent shelf. Locate in L3 at offset (above extrusion if applicable). | 1 |
| **COVERS** | | |
| 3305-0007-000-02 | Vinyl Red hose bed cover with attached rear flap(s). | 1 |
| 3305-0008-000-02 | Vinyl Red crosslay cover with attached side flaps. | 1 |
| **PUMP MODULE** | | |
| 3130-0167 | Pump module to be 76" wide (side to side). Includes upper, lower, crosswalk, speedlay and tranverse module(s) if applicable. | 1 |
| 3130-0523 | Side mount pump module. Extruded aluminum with runningboards. | 1 |
| 3130-0532 | Pump panel opening is 39" wide. Pumper / tanker only. | 1 |

| | | |
|---|---|---|
| 3130-0540 | Pump module height is 80". Pumper / tanker only. | 1 |

| PUMP PANELS | | |
|---|---|---|
| 3134-0006 | The single gauge panel on the driver's side of the side mount module is to be hinged downward. Includes two (2) cable hold opens, and latches. | 1 |
| 3134-0016 | Stainless steel driver and officer side pump panels. | 1 |
| 3134-0143 | Officer side pump panel to be vertical hinged on forward extrusion. Panel to be (3) pieces with upper (2) panels secured in the closed position with push button latches. Upper panel to be held open with gas shock. | 1 |

| MISC PUMP PANEL OPTIONS | | |
|---|---|---|
| 4460-0003 | Pump panel tags color coded per NFPA compliance. | 1 |

| PUMP MODULE OPTIONS | | |
|---|---|---|
| 3136-0058 | E-ONE logo mounted one each side on pump module/preconnect panels. Logos to be sized as applicable to available space on panels. | 1 |
| 3136-0138 | Pump module storage pan. | 1 |
| 3136-0141 | Crosslay double 4.25" wide single stack to hold up to 200' of 2.0" DJ (each). | 1 |

| WATER TANK | | |
|---|---|---|
| 4010-0099 | Fill tower(s) to be located offset to officer side of water tank. | 1 |
| 4010-0178 | 1030 Gallon "T" Water Tank. UPF Poly III color fill towers. Note: Any foam cell(s) and/or storage options through the tank will reduce the overall water capacity. | 1 |

| TANK PLUMBING | | |
|---|---|---|
| 4450-0010 | 2" tank fill Akron manual valve. | 1 |
| 4450-0119 | 3" tank to pump Akron manual valve w/4" tank connection. | 1 |

| LADDER STORAGE / RACKS | | |
|---|---|---|
| 3365-0025-515 | Attic ladder mounting brackets (PR). Locate officer side compartment top. | 1 |
| 3365-0028 | Hard Suction Storage Rack. Driver side compartment top. Includes spring hold downs and scuff plates behind spring mounts (as applicable). | 1 |
| 3365-0031 | Hard Suction Storage Rack. Officer side in adjustable track above ladders (if applicable). Includes spring hold downs and scuff plates. | 1 |
| 3365-0034-515 | (2) aluminum pike pole storage tubes. Locate officer side compartment top. | 1 |
| 3365-0049 | Brand of ladders capable of being carried on unit to be Alco-Lite. | 1 |
| 3365-0086-B99 | Pike pole(s) capable of being stored are to be the following length: (2) 10' pike poles. | 1 |
| 3365-0087-C57 | The length of ladders capable of being stored shall be the following: 24' 2-section and 14' roof ladder. | 1 |
| 3365-0168 | Pike pole tube secondary retaining pin(s) with cable. Locate on end of pike pole tube(s). | 1 |

| HANDRAILS / STEPS | | |
|---|---|---|
| 3330-0277 | Innovative Controls dual lighted LED folding steps rear NFPA. Includes folding steps on driver side (staggered stepped as applicable with tailboard depth) for NFPA hosebed access and handrail mounted on driver side upper hosebed side (as applicable). | 1 |
| 3330-0279-060 | Innovative Controls dual lighted LED folding step. Location: officer side front compartment face. Each location requires a minimum of (1) handrail per NFPA. | 1 |
| 3330-0279-062 | Innovative Controls dual lighted LED folding step. Location: driver side front compartment face. Each location requires a minimum of (1) handrail per NFPA. | 4 |

| MISC BODY OPTIONS | | |
|---|---|---|
| 3340-0004 | Hosebed above the booster tank. Includes forward hosebed and tower(s) cover plate work (as applicable). Hosebed adjustable divider extrusion rearward of the furthest tower is to run full width of the hosebed (as is practical with other hosebed mounted equipment). | 1 |
| 3340-0035 | Divider Long. To run full length of hose bed (front to rear). | 1 |
| 3340-0074 | Body mainframe and hosebed side assemblies for a 85" high body. | 1 |
| 3340-0088 | Smooth plate single axle wheel well painted job color. Includes bolt-on composite wheel well liners. | 1 |
| 3340-0093 | Mud flaps, rear, black with E-ONE logo. | 1 |

| | | |
|---|---|---|
| 3340-0110 | The rear of each hose bed divider to have a hand hold cut-out(s). | 1 |
| 3340-0145 | Rub rail for the body and pump area module(s). | 1 |
| 3340-0680 | Body mainframe layout line to be 23". Includes body and all applicable modules. | 1 |
| SCBA BOTTLE STORAGE | | |
| 3320-0100 | Strap(s), loop style to retain SCBA bottle(s). Locate one per bottle in each exterior storage compartment. | 1 |
| 3320-0187-495 | Cast Products brand (1) SCBA bottle storage with gasketed door and push button latch. Door shall NOT cover the recessed fuel fill if located adjacent to the SCBA storage. Location: driver side rear wheel well offset forward | 1 |
| 3320-0187-497 | Cast Products brand (1) SCBA bottle storage with gasketed door and push button latch. Door shall NOT cover the recessed fuel fill if located adjacent to the SCBA storage. Location: driver side rear wheel well offset rearward | 1 |
| 3320-0187-498 | Cast Products brand (1) SCBA bottle storage with gasketed door and push button latch. Door shall NOT cover the recessed fuel fill if located adjacent to the SCBA storage. Location: officer side rear wheel well offset forward | 1 |
| 3320-0187-500 | Cast Products brand (1) SCBA bottle storage with gasketed door and push button latch. Door shall NOT cover the recessed fuel fill if located adjacent to the SCBA storage. Location: officer side rear wheel well offset rearward | 1 |
| PUMPS | | |
| 4005-0030 | Rating 1250 GPM | 1 |
| 4005-0195 | Hale QFLO 750-1250 GPM pump, single stage. Requires primer option. | 1 |
| PUMP CERTIFICATION | | |
| 4475-0000 | Pump certification 750-2250 GPM | 1 |
| PUMP OPTIONS | | |
| 4015-0008 | Zinc anodes for Hale pump (PR), (1) discharge side and (1) intake side. | 1 |
| 4015-0053-198 | Steamers to be Flush + 1". Location: driver's side. | 1 |
| 4015-0053-199 | Steamers to be Flush + 1". Location: officer's side. | 1 |
| 4015-0098 | Manual operated master pump drain. The master drain shall be clearly marked and placed in accessible location on pump panel. | 1 |
| 4015-0210 | Pump cooler with Innovative Control 1/4 turn valve with "T" handle and label. | 1 |
| 4015-0238 | Hale electric primer (oil-less). | 1 |
| INTAKES | | |
| 4440-0005 | 2.5" Left Intake Akron Manual Valve. | 1 |
| INTAKE OPTIONS | | |
| 4445-0048 | Intake pressure relief valve, Task Force Tips. | 1 |
| DISCHARGES AND PRECONNECTS | | |
| 4415-0012-654 | 1.5" Crosslay with Akron manual valve. Location: crosslay 1 & 2. | 2 |
| 4415-0014-581 | 2.5" Left Pump Panel Discharge Akron Manual Valve. Location: left side discharge 1. | 1 |
| 4415-0014-582 | 2.5" Left Pump Panel Discharge Akron Manual Valve. Location: left side discharge 2. | 1 |
| 4415-0022-350 | 2.5" Left Rear Discharge Akron Manual Valve. Location: left rear discharge. | 1 |
| 4415-0041 | 3" Deck Gun Discharge, Akron manual valve. | 1 |
| 4415-0054-583 | 4" Right Pump Panel Discharge with 3" Akron Manual Valve (Waterous pumps noted location to be forward lower port). Location: right side discharge 1. | 1 |
| 4417-0106-L65 | Deck gun piping to be positioned centered in deck gun channel. | 1 |
| DISCHARGE OPTIONS | | |
| 4417-0175 | Innovative Controls push/pull valve controls with locking T handles. | 1 |
| 4417-0177 | Innovative Controls 3/4" bleeder/drain valve include 1/4 turn T-handle. | 7 |
| 4417-0185 | Innovative Controls discharge and intake bezels with integral color code and verbiage for side mount pump panel. | 1 |
| PRESSURE GOVERNORS | | |
| 4465-0011 | Class 1 TPG pressure governor. Includes, water, oil, volt and tachometer. | 1 |
| GAUGES | | |
| 4435-0001 | Class 1 Intelli-Tank water tank level gauge. On pump panel. | 1 |
| 4435-0246 | 2.5" Innovative Controls stainless steel case pressure gauge (0-400) with color code bezel. | 7 |

| | | |
|---|---|---|
| 4435-0247 | 4" Innovative Controls stainless steel case master pressure gauges with bezel. Intake 30-0-400, and discharge 0-400. | 1 |
| **ELECTRICAL SYSTEMS** | | |
| 5010-0014-E12 | Vehicle data recorder for commercial cab - 2009 NFPA compliant. Includes occupant detection with display. Display location: outboard on driver's side overhead console. | 1 |
| 5010-0036 | V-MUX Electrical system for pumper / tanker / rescue. | 1 |
| 5010-0059-339 | VFD Text display for V-MUX electrical system. Location: center of dash. | 1 |
| **LIGHT BARS** | | |
| 5300-0267 | Light bar Whelen Justice model JE2NFPA 56" LED with clear lenses and MKEZ7 mounts. N/A on Vista roofs with front facing windows. Includes (4) red corner facing LIN6 LED lights, (6) forward facing CON3 Linear LED lights; (4) red, (2) white. Location: Centered on the front cab roof. | 1 |
| **WARNING LIGHT PACKAGES** | | |
| 5550-0128-535 | Whelen Super LED lower level warning light package. Includes (6) red 600 LED light heads, (2) red LIN3 lights and (2) red 500 LED light heads w/chrome flanges. Locate side facing lights: at forward most position, centered in rear wheel well, and side facing at rear of body in rubrail if equipped. | 1 |
| **WARNING LIGHTS** | | |
| 5600-0078-479-06 | Whelen Super LED beacon (PR) model L31H with Red domes. Location rear upper body on aerial style brackets. | 1 |
| 5600-0105-170 | Hazard (door ajar) light 2" LED. Location: center overhead. | 1 |
| **SIRENS** | | |
| 5500-0009 | Federal PA300 electronic siren recessed mounted. | 1 |
| 5500-0024-170 | The electronic siren control is to be located on the center overhead. | 1 |
| **SPEAKERS** | | |
| 5510-0028 | Speaker Federal Dynamax ES100. Located officer's side behind tow hook. Navistar 4400 chassis only. | 1 |
| **DOT LIGHTING** | | |
| 5150-0007 | Whelen 600 series LED vertical mount tail lights. Includes LED stop/tail, arrow turn and halogen back-up lights with vertical Cast 3 housing and weatherproof connectors. | 1 |
| 5150-0017 | License plate light LED with chrome housing located at the rear of the body. | 1 |
| 5150-0022 | Marker light LED body package. Commercial pumper bodies only. | 1 |
| **LIGHTS - COMPARTMENT, STEP & GROUND** | | |
| 5380-0189 | Compartment light package Amdor Luma-Bar LED for small bodies. Includes one light per compartment (two if transverse). | 1 |
| 5380-0200 | Ground light package EON LED - small. | 1 |
| **LIGHTS - DECK AND SCENE** | | |
| 5390-0058-395 | Deck Lights - Truck-Lite LED model 81380 (PR). Location: rear body/beavertail area on the trailing edge up high. | 1 |
| 5390-0076 | Hose bed light Truck-Lite LED model 81380. Locate at front of hose bed. Switched with work light switch in cab. | 1 |
| 5390-0102 | Crosslay light Truck-Lite LED model 81380. Locate to rear of crosslay (SM) and forward of crosslay (TM as applicable). Switched with work light switch in cab. | 1 |
| **LIGHTS - NON-WARNING** | | |
| 5400-0003 | Engine compartment light (EA). | 1 |
| 5400-0010 | Incandescent pump compartment light (EA). | 1 |
| 5400-0031 | Pair of Cab Dome Large Lights mounted driver and officer side front. N/A on E-One Chassis. Required on Comm Chassis. | 1 |
| 5400-0032 | Pair of Cab Dome Large Lights mounted driver and officer side Rear. N/A on E-One Chassis or two door commercial chassis. Required on Comm Chassis. | 1 |

| | | |
|---|---|---|
| 5400-0039 | Spotlight Specialty 2150 hand held located on officer's side of cab dash - hardwired. | 1 |
| 5400-0092 | Weldon pump panel LED light package with (3) lights per side pump panel. Pump panels over 45" may require additional lights. Side mount only. | 1 |
| MISC ELECTRICAL | | |
| 5110-0017 | Back-up alarm 97 dB. | 1 |
| LIGHTS - QUARTZ | | |
| 5450-0290-407 | Light Whelen Pioneer model PFP1 12V with internal top raise pole mount. Includes switch accessible to driver. Location: driver side of pump module forward area. | 1 |
| 5450-0290-408 | Light Whelen Pioneer model PFP1 12V with internal top raise pole mount. Includes switch accessible to driver. Location: officer side of pump module forward area. | 1 |
| ELBOWS | | |
| 7400-0004 | Elbow 30 degree chrome swivel w/2.5"FNST x 2.5"MNST. | 3 |
| ADAPTERS | | |
| 7200-0026 | Swivel Connector 4" FNST x 5" Storz 30 Deg Elbow with Tethered Cap. | 1 |
| HAND TOOLS | | |
| 7600-0005 | Pike Pole Fiberglass 6'. | 1 |
| 7600-0007 | Pike Pole Fiberglass 10'. | 1 |
| HOSE / NOZZLES | | |
| 7700-0004 | Hard suction hose 6" X 10' with Pyrolite couplings. | 2 |
| GROUND LADDERS | | |
| 7800-0007 | Alco-Lite PRL-14' roof ladder. | 1 |
| 7800-0016 | Alco-Lite PEL-24' 2-section extension ladder. | 1 |
| 7800-0032 | Alco-Lite FL-10, 10' folding ladder w/safety shoes. | 1 |
| MISC LOOSE EQUIPMENT | | |
| 7900-0010 | Chrome Barrel Strainer 6" NST. | 1 |
| 7900-0014 | DOT Required Drive Away Kit - Kit includes three (3) triangular warning reflectors with carrying case. This kit is for the end user and is to remain with the truck. | 1 |
| EXTERIOR PAINT | | |
| 8100-0071 | Undercoating E-ONE. | 1 |
| 8100-0089 | All applicable pump/pre-connect application modules are to have a sanded finish (not painted job color). Includes upper and lower pump modules, crosswalk module and/or speedlay/pre-connect module (as applicable). Rear mounted body/pump module to be painted job color. | 1 |
| 8100-0116 | Rear body surface to have a sanded finish (not painted job color). Includes hinged doors that do not have discrete sales codes and removable panels. | 1 |
| 8100-0182-000-17 | Paint Body - Small - For Pumpers, Rear Mounts, S/A Tankers/Wetsides and Rescues. Sikkens paint. Color: FLNA3225E-1 Red. | 1 |
| 8100-0442-000-17 | International cab paint (by chassis OEM). Paint to match FLNA3225E-1 Red. | 1 |
| STRIPING | | |
| 8300-0002-859-12 | NFPA Scotchlite Stripe - 4" wide and straight on front/sides of cab and sides/rear of body. Color: White. Location: bottom of stripe flush with bottom of cab and straight back. | 1 |
| 8300-0042 | White rubrail scotchlite insert. | 1 |
| 8300-0084-000-72 | Chevron "A" style 6" printed sheet Scotchlite striping full width on rear of body. Includes rear facing extrusions, panels and doors. Colors to be Yellow/Red. | 1 |
| 8300-0313 | Yellow line to indicate designated standing / walking areas above 48" high in compliance with 2016 NFPA 1901. Line to be 1" wide. Steps, ladders and areas with a railing or structure at least 12" high are excluded from requiring the line. | 1 |
| WARRANTY / STANDARD & EXTENDED | | |

| | | |
|---|---|---|
| 9100-0000 | Standard 1 Year Warranty. | 1 |
| 9100-0004 | 10 Year/100,000 Mile Structural Warranty for Alum Cab / Body - Statement of Warranty. | 1 |
| 9100-0005 | 10 Year Stainless Steel Plumbing Warranty - Statement of Warranty. | 1 |
| 9100-0019 | 10 Year Limited Paint and Perforation Warranty - For Sikkens Paint. | 1 |

| SUPPORT, DELIVERY, INSPECTIONS AND MANUALS | | |
|---|---|---|
| 9300-0009 | Manuals, Operator and Service CD-ROM. | 1 |
| 9300-0316 | Fire Apparatus Safety Guide published by FAMA, latest edition. | 1 |

PRICE - 2017 E-ONE PUMPER - COMMERCIAL CHASSIS - $260,469.

# STATE OF OHIO TERM SCHEDULE

## 4200 SURFACE RD
## COLUMBUS, OH 43228

*Quote No: 70720*

8/27/2016

Quote Rev:27 Drawing Rev:7

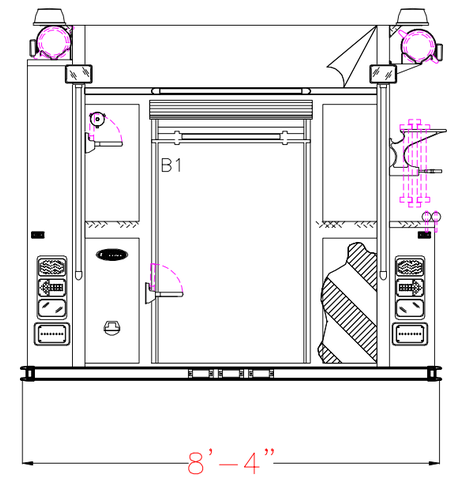


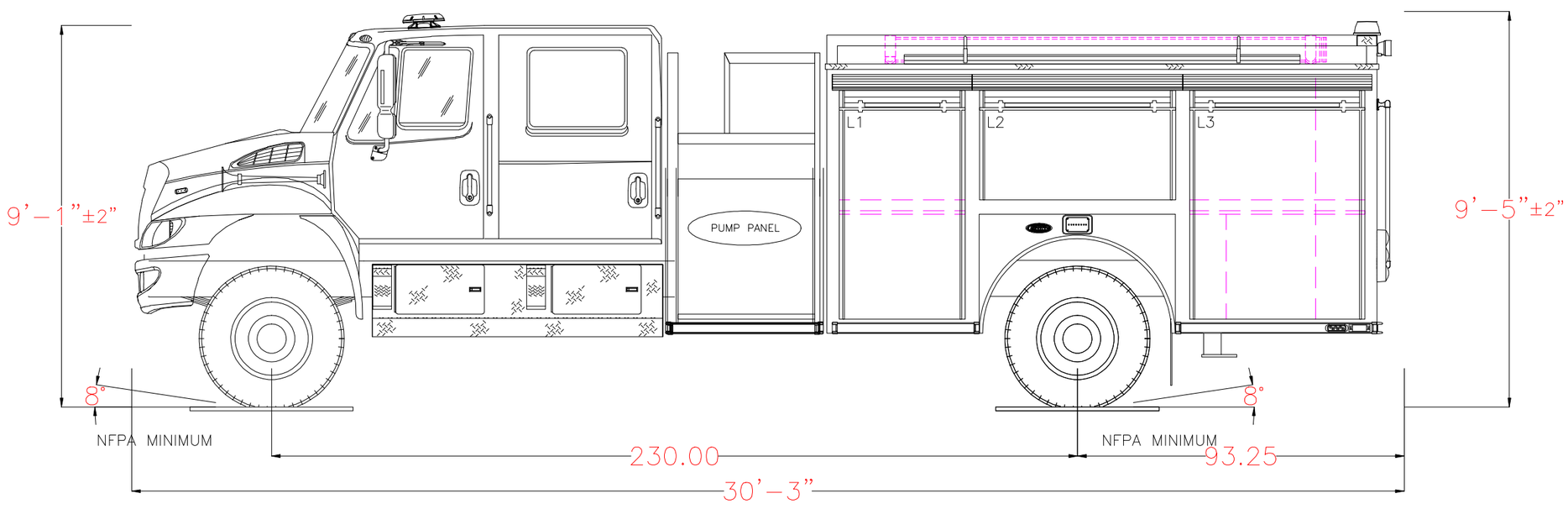


POWERED BY EZDRAW

Notice This drawing provides a GENERAL REPRESENTATION of the vehicle configuration and should be used for evaluation purposes. The respective dimensions shown,including overall height and length, are estimates and may vary due to manufacturing processes. All other items such as lighting and fixtures, plumbing, compartmentation, and other generally assembled details are shown for REFERENCE ONLY and may not be a direct reflection of the final truck configuration. In ALL situations where this drawing may conflict with the specifications, THE SPECIFICATIONS, AS REFLECTED IN THE APPROVED SHOP ORDER, SHALL PREVAIL. Unless otherwise specified, the proposed apparatus will be manufactured to the latest NFPA recommendations as well as other applicable federally regulated safety regulations. E-One reserves the right to engineer and incorporate design improvements and changes without notice, while adhering to the intent of the specification.

| 1250 GPM PUMP<br>0 TOTAL VOLUME<br>0 TOTAL FOAM | HOSE LOADS : |
|---|---|
| | |
| | |
| | |
| | |

| | OPENING | | INTERIOR DIMENSIONS | | | | |
|---|---|---|---|---|---|---|---|
| COMPT. | WIDTH | HEIGHT | WIDTH | LOWER HEIGHT | LOWER DEPTH | UPPER HEIGHT | UPPER DEPTH |
| L1 | 34 | 59.75 | 36 | 30 | 26 | 26.75 | 12 |
| L2 | 54 | 25.75 | 56 | N/A | N/A | 26.75 | 12 |
| L3 | 48 | 59.75 | 50 | 30 | 24 | 26.75 | 12 |
| R1 | 34 | 21 | 36 | 30 | 26 | N/A | N/A |
| R2 | 48 | 21 | 50 | 30 | 26 | N/A | N/A |
| B1 | 36 | 45 | 38 | 30 | 26 | 24 | 14 |

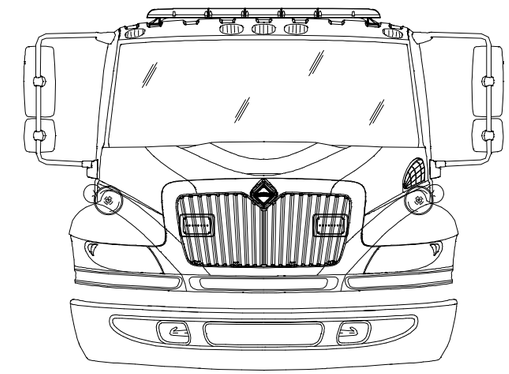

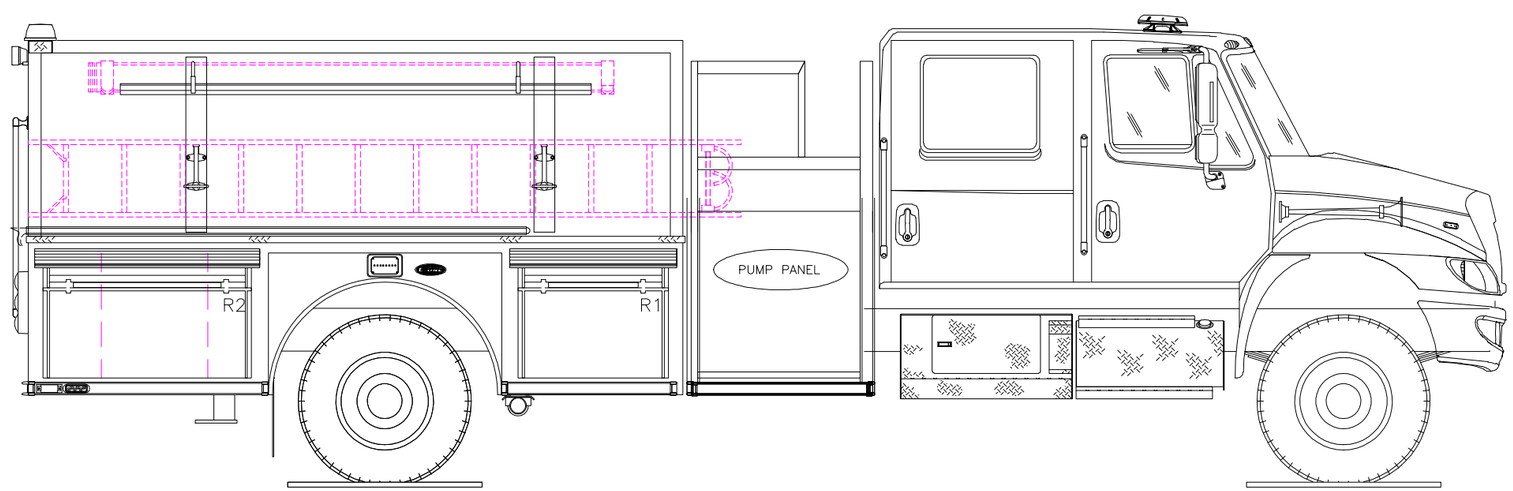


POWERED BY EZDRAW

Fire Apparatus Quotation for:
STATE OF OHIO TERM SCHEDULE

Quotation Number: 70545 Rev: 29

Unit Description: PMPR-COMM
Quote Description: Pumper, Commercial Chassis

| Salescode | Extended Description | Qty |
|---|---|---|
| **TESTING COMPLIANCE STANDARD** | | |
| 1001-0065 | The E-ONE supplied components of the vehicle shall meet the requirements of NFPA 1901, 2016 edition. | 1 |
| 3090-0002 | OAH. Unit has no overall height restrictions. | 1 |
| 3090-0004 | OAL. Unit has no overall length restrictions. | 1 |
| 3090-0007 | Hosebed hoseload allowance on the apparatus shall be 1200 lbs. | 1 |
| 3340-1137-12C | Equipment allowance on the apparatus shall be 2500 lbs. This allowance is in addition to the weight of the hoses and ground ladders listed in the shop order as applicable. | 1 |
| **CHASSIS PREP** | | |
| 1020-0011 | Comm Chas Prep E-1 Supp-Non FL. International | 1 |
| **FRAME ASSEMBLY** | | |
| 1250-0011 | Rear underbody support frame. | 1 |
| **AXLE OPTIONS** | | |
| 1025-0042 | Front axle for commercial chassis 12,000 lb. rating. | 1 |
| 1025-0053 | Rear axle for commercial chassis 24,000lb rating | 1 |
| **WHEEL OPTIONS** | | |
| 1050-0007 | Front axle wheel trim kit. Includes stainless steel lug nut covers (chrome plated plastic if applicable) and center cap with E-ONE logo. Note: Center cap will have an inspection port IPO a logo if equipped with Stemco oil seals. | 1 |
| 1050-0008 | Rear axle (single) wheel trim kit. Includes stainless steel lug nut covers (chrome plated plastic if applicable) and center cap with E-ONE logo. E-ONE custom chassis w/steel wheels will have chrome plated plastic lug covers. | 1 |
| **TIRE OPTIONS** | | |
| 1060-0117 | RWC AirGuard LED tire pressure monitoring valve stem caps (6) for single rear axle applications. | 1 |
| **AIR SYSTEM OPTIONS** | | |
| 1110-0010-277 | Air inlet. To charge brake system. Commercial chassis only. Location: driver's door step area. | 1 |
| 1110-0065 | Dual Grover hood mounted air horns with driver and officer foot switches to be supplied and installed by Navistar. | 1 |
| **ENGINES & TRANSMISSIONS** | | |
| 1200-0126 | Chassis speed to be electronic limited and not to exceed a maximum of 68 MPH. Note: Speed rating may be lower based on OEM tire ratings/top speed limitations provided on chassis. | 1 |
| 1200-0296 | International N9 engine, 330 HP SCR. | 1 |
| **CHASSIS OPTIONS** | | |
| 1680-0011 | Tow eyes rear below body, painted. | 1 |
| 1680-0078 | Tow hooks front OEM. Not available with extended E-ONE installed front bumper. Tow hooks are OEM supplied with chassis. | 1 |
| 1680-0235-R01 | The batteries to be located under left hand side of cab. | 1 |
| 1680-0323 | Diamond plate trim package for a (4) door International. Includes a full length driver side and officer side trim that will utilize pieces already supplied by the OEM. For International cabs with SCR and | 1 |

| | | |
|---|---|---|
| | DEF. | |
| **CAB MODEL** | | |
| 1500-0011 | Four door Navistar 4400 4x2. | 1 |
| **CAB BADGE PACKAGE** | | |
| 1610-0000 | Cab and body to have applicable E-ONE logos. | 1 |
| **CAB DOOR OPTIONS** | | |
| 1550-0059-000-G6 | Reflective Red/Lemon Yellow printed striping positioned in the "A" formation located on the cab door panels. | 1 |
| **MISC EXTERIOR CAB OPTIONS** | | |
| 1675-0007 | Diesel fuel only label. | 1 |
| 1510-0151 | Universal air pack bottle bracket installed (EA). | 4 |
| **SEATS** | | |
| 1685-0032 | Seating capacity tag of five occupants. | 1 |
| **CAB ELECTRICAL OPTIONS** | | |
| 1750-0024-277-04 | Auto-Eject receptacle inlet 20 amp located driver's door step area with a Yellow cover. | 1 |
| 1750-0343 | Battery charger E-ONE LPC 20. 120 volt inlet, 20 amp output. | 1 |
| **BODY COMPT LEFT SIDE** | | |
| 3100-0153 | Driver side body with full height 42" wide forward and 56" wide rearward enhanced extended compartmentation. Includes (1) 56" wide compartment over the wheel well. | 1 |
| **BODY COMPT RIGHT SIDE** | | |
| 3120-0283 | Officer side body with full height 42" wide forward and 56" wide rearward enhanced extended compartmentation. Includes (1) 56" wide compartment over the wheel well and one (1) storage tunnel. | 1 |
| **BODY COMPT REAR** | | |
| 3110-0013 | Full Height Rear Compartment with Officer Side Storage Tunnel. Includes smooth plate panels and storage access door with push button latch. | 1 |
| 3110-0052 | Bolt-on diamond plate tailboard (full width of rear compartment). Includes the enhanced extended side compartment frame work and handrails- (2) vertical on trailing edge of body and horizontal mounted handrail(s) below hosebed. | 1 |
| 3110-0092 | Enhanced Extended Compartmentation stepped down below hosebed level. Includes embossed diamond plate compartment tops. | 1 |
| **DOORS** | | |
| 3300-0017-004 | Door roll up short (up to 45") with satin finish ROM. Location(s): L2. | 1 |
| 3300-0017-016 | Door roll up short (up to 45") with satin finish ROM. Location(s): R2. | 1 |
| 3300-0019-003 | Door roll up tall (greater than 45") with satin finish ROM. Location(s): L1. | 1 |
| 3300-0019-005 | Door roll up tall (greater than 45") with satin finish ROM. Location(s): L3. | 1 |
| 3300-0019-015 | Door roll up tall (greater than 45") with satin finish ROM. Location(s): R1. | 1 |
| 3300-0019-017 | Door roll up tall (greater than 45") with satin finish ROM. Location(s): R3. | 1 |
| 3300-0019-027 | Door roll up tall (greater than 45") with satin finish ROM. Location(s): B1. | 1 |
| **SHELVES** | | |
| 3370-0025-101 | Shelf, permanent shelf. Locate in R1 at offset (above extrusion if applicable). | 1 |
| 3370-0025-102 | Shelf, permanent shelf. Locate in R3 at offset (above extrusion if applicable). | 1 |
| 3370-0052-003 | Adjustable shelf (J-Style) for non-transverse compartments 16" or greater in depth. Location: L1. | 1 |
| 3370-0052-004 | Adjustable shelf (J-Style) for non-transverse compartments 16" or greater in depth. Location: L2. | 1 |
| 3370-0052-005 | Adjustable shelf (J-Style) for non-transverse compartments 16" or greater in depth. Location: L3. | 1 |
| 3370-0052-027 | Adjustable shelf (J-Style) for non-transverse compartments 16" or greater in depth. Location: B1. | 1 |

| | | |
|---|---|---|
| 3370-0054-003 | Tracks for adjustable shelf and/or adjustable tray in compartments 16" or greater in depth. Location: L1. | 1 |
| 3370-0054-004 | Tracks for adjustable shelf and/or adjustable tray in compartments 16" or greater in depth. Location: L2. | 1 |
| 3370-0054-005 | Tracks for adjustable shelf and/or adjustable tray in compartments 16" or greater in depth. Location: L3. | 1 |
| 3370-0054-027 | Tracks for adjustable shelf and/or adjustable tray in compartments 16" or greater in depth. Location: B1. | 1 |

| COVERS | | |
|---|---|---|
| 3305-0007-000-02 | Vinyl Red hose bed cover with attached rear flap(s). | 1 |
| 3305-0008-000-02 | Vinyl Red crosslay cover with attached side flaps. | 1 |

| PUMP MODULE | | |
|---|---|---|
| 3130-0167 | Pump module to be 76" wide (side to side). Includes upper, lower, crosswalk, speedlay and tranverse module(s) if applicable. | 1 |
| 3130-0523 | Side mount pump module. Extruded aluminum with runningboards. | 1 |
| 3130-0532 | Pump panel opening is 39" wide. Pumper / tanker only. | 1 |
| 3130-0540 | Pump module height is 80". Pumper / tanker only. | 1 |

| PUMP PANELS | | |
|---|---|---|
| 3134-0016 | Stainless steel driver and officer side pump panels. | 1 |
| 3134-0064 | The gauge panel(s) on the driver side of the Side Mount module to be hinged upward. Panel(s) to include (2) mechanical/pneumatic (as applicable to panel size) hold opens and latches. | 1 |
| 3134-0143 | Officer side pump panel to be vertical hinged on forward extrusion. Panel to be (3) pieces with upper (2) panels secured in the closed position with push button latches. Upper panel to be held open with gas shock. | 1 |

| MISC PUMP PANEL OPTIONS | | |
|---|---|---|
| 4460-0003 | Pump panel tags color coded per NFPA compliance. | 1 |

| PUMP MODULE OPTIONS | | |
|---|---|---|
| 3136-0058 | E-ONE logo mounted one each side on pump module/preconnect panels. Logos to be sized as applicable to available space on panels. | 1 |
| 3136-0138 | Pump module storage pan. | 1 |
| 3136-0141 | Crosslay double 4.25" wide single stack to hold up to 200' of 2.0" DJ (each). | 1 |

| WATER TANK | | |
|---|---|---|
| 4010-0099 | Fill tower(s) to be located offset to officer side of water tank. | 1 |
| 4010-0177 | 780 Gallon "R" Water Tank. UPF Poly III color fill towers. Note: Any foam cell(s) and/or storage options through the tank will reduce the overall water capacity. | 1 |

| TANK PLUMBING | | |
|---|---|---|
| 4450-0010 | 2" tank fill Akron manual valve. | 1 |
| 4450-0119 | 3" tank to pump Akron manual valve w/4" tank connection. | 1 |

| LADDER STORAGE / RACKS | | |
|---|---|---|
| 3365-0028 | Hard Suction Storage Rack. Driver side compartment top. Includes spring hold downs and scuff plates behind spring mounts (as applicable). | 1 |
| 3365-0035 | Hard Suction Storage Rack. Officer side compartment top. Includes spring hold downs and scuff plates behind spring mounts (as applicable). | 1 |
| 3365-0049 | Brand of ladders capable of being carried on unit to be Alco-Lite. | 1 |
| 3365-0087-Z71 | The length of ladders capable of being stored shall be the following: 24' 2-section, 14' roof ladder and 10' attic ladder w/shoes. | 1 |
| 3365-0149-O97 | Storage tunnel capable of holding: (1) 2-section, (1) roof, (1) attic, (2) pike poles, (1) backboard in Officer. | 1 |

| HANDRAILS / STEPS | | |
|---|---|---|
| 3330-0277 | Innovative Controls dual lighted LED folding steps rear NFPA. Includes folding steps on driver side (staggered stepped as applicable with tailboard depth) for NFPA hosebed access and handrail mounted on driver side upper hosebed side (as applicable). | 1 |

| | | |
|---|---|---|
| 3330-0279-060 | Innovative Controls dual lighted LED folding step. Location: officer side front compartment face. Each location requires a minimum of (1) handrail per NFPA. | 4 |
| 3330-0279-062 | Innovative Controls dual lighted LED folding step. Location: driver side front compartment face. Each location requires a minimum of (1) handrail per NFPA. | 4 |
| MISC BODY OPTIONS | | |
| 3340-0004 | Hosebed above the booster tank. Includes forward hosebed and tower(s) cover plate work (as applicable). Hosebed adjustable divider extrusion rearward of the furthest tower is to run full width of the hosebed (as is practical with other hosebed mounted equipment). | 1 |
| 3340-0035 | Divider Long. To run full length of hose bed (front to rear). | 1 |
| 3340-0075 | Body mainframe and hosebed side assemblies for a 90" high body. | 1 |
| 3340-0088 | Smooth plate single axle wheel well painted job color. Includes bolt-on composite wheel well liners. | 1 |
| 3340-0093 | Mud flaps, rear, black with E-ONE logo. | 1 |
| 3340-0110 | The rear of each hose bed divider to have a hand hold cut-out(s). | 1 |
| 3340-0145 | Rub rail for the body and pump area module(s). | 1 |
| 3340-0680 | Body mainframe layout line to be 23". Includes body and all applicable modules. | 1 |
| SCBA BOTTLE STORAGE | | |
| 3320-0100 | Strap(s), loop style to retain SCBA bottle(s). Locate one per bottle in each exterior storage compartment. | 1 |
| 3320-0187-495 | Cast Products brand (1) SCBA bottle storage with gasketed door and push button latch. Door shall NOT cover the recessed fuel fill if located adjacent to the SCBA storage. Location: driver side rear wheel well offset forward | 1 |
| 3320-0187-497 | Cast Products brand (1) SCBA bottle storage with gasketed door and push button latch. Door shall NOT cover the recessed fuel fill if located adjacent to the SCBA storage. Location: driver side rear wheel well offset rearward | 1 |
| 3320-0187-498 | Cast Products brand (1) SCBA bottle storage with gasketed door and push button latch. Door shall NOT cover the recessed fuel fill if located adjacent to the SCBA storage. Location: officer side rear wheel well offset forward | 1 |
| 3320-0187-500 | Cast Products brand (1) SCBA bottle storage with gasketed door and push button latch. Door shall NOT cover the recessed fuel fill if located adjacent to the SCBA storage. Location: officer side rear wheel well offset rearward | 1 |
| PUMPS | | |
| 4005-0030 | Rating 1250 GPM | 1 |
| 4005-0195 | Hale QFLO 750-1250 GPM pump, single stage. Requires primer option. | 1 |
| PUMP CERTIFICATION | | |
| 4475-0000 | Pump certification 750-2250 GPM | 1 |
| PUMP OPTIONS | | |
| 4015-0008 | Zinc anodes for Hale pump (PR), (1) discharge side and (1) intake side. | 1 |
| 4015-0053-198 | Steamers to be Flush + 1". Location: driver's side. | 1 |
| 4015-0053-199 | Steamers to be Flush + 1". Location: officer's side. | 1 |
| 4015-0098 | Manual operated master pump drain. The master drain shall be clearly marked and placed in accessible location on pump panel. | 1 |
| 4015-0210 | Pump cooler with Innovative Control 1/4 turn valve with "T" handle and label. | 1 |
| 4015-0238 | Hale electric primer (oil-less). | 1 |
| INTAKES | | |
| 4440-0005 | 2.5" Left Intake Akron Manual Valve. | 1 |
| INTAKE OPTIONS | | |
| 4445-0048 | Intake pressure relief valve, Task Force Tips. | 1 |
| DISCHARGES AND PRECONNECTS | | |
| 4415-0012-654 | 1.5" Crosslay with Akron manual valve. Location: crosslay 1 & 2. | 2 |
| 4415-0014-581 | 2.5" Left Pump Panel Discharge Akron Manual Valve. Location: left side discharge 1. | 1 |
| 4415-0014-582 | 2.5" Left Pump Panel Discharge Akron Manual Valve. Location: left side discharge 2. | 1 |

| | | |
|---|---|---|
| 4415-0022-350 | 2.5" Left Rear Discharge Akron Manual Valve. Location: left rear discharge. | 1 |
| 4415-0041 | 3" Deck Gun Discharge, Akron manual valve. | 1 |
| 4415-0054-583 | 4" Right Pump Panel Discharge with 3" Akron Manual Valve (Waterous pumps noted location to be forward lower port). Location: right side discharge 1. | 1 |
| 4417-0106-L65 | Deck gun piping to be positioned centered in deck gun channel. | 1 |

| DISCHARGE OPTIONS | | |
|---|---|---|
| 4417-0175 | Innovative Controls push/pull valve controls with locking T handles. | 1 |
| 4417-0177 | Innovative Controls 3/4" bleeder/drain valve include 1/4 turn T-handle. | 7 |
| 4417-0185 | Innovative Controls discharge and intake bezels with integral color code and verbiage for side mount pump panel. | 1 |

| PRESSURE GOVERNORS | | |
|---|---|---|
| 4465-0011 | Class 1 TPG pressure governor. Includes, water, oil, volt and tachometer. | 1 |

| GAUGES | | |
|---|---|---|
| 4435-0083 | Innovative Controls 10 LED SL series water tank level gauge. On pump panel. | 1 |
| 4435-0246 | 2.5" Innovative Controls stainless steel case pressure gauge (0-400) with color code bezel. | 7 |
| 4435-0247 | 4" Innovative Controls stainless steel case master pressure gauges with bezel. Intake 30-0-400, and discharge 0-400. | 1 |

| ELECTRICAL SYSTEMS | | |
|---|---|---|
| 5010-0014-E12 | Vehicle data recorder for commercial cab - 2009 NFPA compliant. Includes occupant detection with display. Display location: outboard on driver's side overhead console. | 1 |
| 5010-0036 | V-MUX Electrical system for pumper / tanker / rescue. | 1 |
| 5010-0059-339 | VFD Text display for V-MUX electrical system. Location: center of dash. | 1 |

| LIGHT BARS | | |
|---|---|---|
| 5300-0267 | Light bar Whelen Justice model JE2NFPA 56" LED with clear lenses and MKEZ7 mounts. N/A on Vista roofs with front facing windows. Includes (4) red corner facing LIN6 LED lights, (6) forward facing CON3 Linear LED lights; (4) red, (2) white. Location: Centered on the front cab roof. | 1 |

| WARNING LIGHT PACKAGES | | |
|---|---|---|
| 5550-0128-535 | Whelen Super LED lower level warning light package. Includes (6) red 600 LED light heads, (2) red LIN3 lights and (2) red 500 LED light heads w/chrome flanges. Locate side facing lights: at forward most position, centered in rear wheel well, and side facing at rear of body in rubrail if equipped. | 1 |

| WARNING LIGHTS | | |
|---|---|---|
| 5600-0078-479-06 | Whelen Super LED beacon (PR) model L31H with Red domes. Location rear upper body on aerial style brackets. | 1 |
| 5600-0105-170 | Hazard (door ajar) light 2" LED. Location: center overhead. | 1 |

| SIRENS | | |
|---|---|---|
| 5500-0015 | Whelen model 295SLSA1 siren with microphone (replaced 295HFSA1). | 1 |
| 5500-0024-170 | The electronic siren control is to be located on the center overhead. | 1 |

| SPEAKERS | | |
|---|---|---|
| 5510-0028 | Speaker Federal Dynamax ES100. Located officer's side behind tow hook. Navistar 4400 chassis only. | 1 |

| DOT LIGHTING | | |
|---|---|---|
| 5150-0007 | Whelen 600 series LED vertical mount tail lights. Includes LED stop/tail, arrow turn and halogen back-up lights with vertical Cast 3 housing and weatherproof connectors. | 1 |
| 5150-0017 | License plate light LED with chrome housing located at the rear of the body. | 1 |
| 5150-0022 | Marker light LED body package. Commercial pumper bodies only. | 1 |
| 5150-0032 | Bracket license plate at rear of body. | 1 |

| LIGHTS - COMPARTMENT, STEP & GROUND |
|---|

| | | |
|---|---|---|
| 5380-0077 | Compartment light package Amdor Luma-Bar LED for medium bodies. Includes one light per compartment (two if transverse). | 1 |
| 5380-0200 | Ground light package EON LED - small. | 1 |
| **LIGHTS - DECK AND SCENE** | | |
| 5390-0058-395 | Deck Lights - Truck-Lite LED model 81380 (PR). Location: rear body/beavertail area on the trailing edge up high. | 1 |
| 5390-0076 | Hose bed light Truck-Lite LED model 81380. Locate at front of hose bed. Switched with work light switch in cab. | 1 |
| 5390-0102 | Crosslay light Truck-Lite LED model 81380. Locate to rear of crosslay (SM) and forward of crosslay (TM as applicable). Switched with work light switch in cab. | 1 |
| **LIGHTS - NON-WARNING** | | |
| 5400-0003 | Engine compartment light (EA). | 1 |
| 5400-0010 | Incandescent pump compartment light (EA). | 1 |
| 5400-0031 | Pair of Cab Dome Large Lights mounted driver and officer side front. N/A on E-One Chassis. Required on Comm Chassis. | 1 |
| 5400-0032 | Pair of Cab Dome Large Lights mounted driver and officer side Rear. N/A on E-One Chassis or two door commercial chassis. Required on Comm Chassis. | 1 |
| 5400-0039 | Spotlight Specialty 2150 hand held located on officer's side of cab dash - hardwired. | 1 |
| 5400-0092 | Weldon pump panel LED light package with (3) lights per side pump panel. Pump panels over 45" may require additional lights. Side mount only. | 1 |
| **CONTROLS / SWITCHES** | | |
| 5100-0007-198 | Foot switch to control electronic siren located driver's side. | 1 |
| **MISC ELECTRICAL** | | |
| 5110-0017 | Back-up alarm 97 dB. | 1 |
| **LIGHTS - QUARTZ** | | |
| 5450-0290-407 | Light Whelen Pioneer model PFP1 12V with internal top raise pole mount. Includes switch accessible to driver. Location: driver side of pump module forward area. | 1 |
| 5450-0290-408 | Light Whelen Pioneer model PFP1 12V with internal top raise pole mount. Includes switch accessible to driver. Location: officer side of pump module forward area. | 1 |
| **ELBOWS** | | |
| 7400-0004 | Elbow 30 degree chrome swivel w/2.5"FNST x 2.5"MNST. | 3 |
| **ADAPTERS** | | |
| 7200-0026 | Swivel Connector 4" FNST x 5" Storz 30 Deg Elbow with Tethered Cap. | 1 |
| **HAND TOOLS** | | |
| 7600-0005 | Pike Pole Fiberglass 6'. | 1 |
| 7600-0007 | Pike Pole Fiberglass 10'. | 1 |
| **HOSE / NOZZLES** | | |
| 7700-0004 | Hard suction hose 6" X 10' with Pyrolite couplings. | 2 |
| **GROUND LADDERS** | | |
| 7800-0007 | Alco-Lite PRL-14' roof ladder. | 1 |
| 7800-0016 | Alco-Lite PEL-24' 2-section extension ladder. | 1 |
| 7800-0032 | Alco-Lite FL-10, 10' folding ladder w/safety shoes. | 1 |
| **MISC LOOSE EQUIPMENT** | | |
| 7900-0010 | Chrome Barrel Strainer 6" NST. | 1 |
| 7900-0014 | DOT Required Drive Away Kit - Kit includes three (3) triangular warning reflectors with carrying case. This kit is for the end user and is to remain with the truck. | 1 |
| **EXTERIOR PAINT** | | |
| 8100-0071 | Undercoating E-ONE. | 1 |

| | | |
|---|---|---|
| 8100-0089 | All applicable pump/pre-connect application modules are to have a sanded finish (not painted job color). Includes upper and lower pump modules, crosswalk module and/or speedlay/pre-connect module (as applicable). Rear mounted body/pump module to be painted job color. | 1 |
| 8100-0116 | Rear body surface to have a sanded finish (not painted job color). Includes hinged doors that do not have discrete sales codes and removable panels. | 1 |
| 8100-0182-000-17 | Paint Body - Small - For Pumpers, Rear Mounts, S/A Tankers/Wetsides and Rescues. Sikkens paint. Color: FLNA3225E-1 Red. | 1 |
| 8100-0442-000-17 | International cab paint (by chassis OEM). Paint to match FLNA3225E-1 Red. | 1 |
| STRIPING | | |
| 8300-0002-859-12 | NFPA Scotchlite Stripe - 4" wide and straight on front/sides of cab and sides/rear of body. Color: White. Location: bottom of stripe flush with bottom of cab and straight back. | 1 |
| 8300-0042 | White rubrail scotchlite insert. | 1 |
| 8300-0084-000-72 | Chevron "A" style 6" printed sheet Scotchlite striping full width on rear of body. Includes rear facing extrusions, panels and doors. Colors to be Yellow/Red. | 1 |
| 8300-0313 | Yellow line to indicate designated standing / walking areas above 48" high in compliance with 2016 NFPA 1901. Line to be 1" wide. Steps, ladders and areas with a railing or structure at least 12" high are excluded from requiring the line. | 1 |
| WARRANTY / STANDARD & EXTENDED | | |
| 9100-0000 | Standard 1 Year Warranty. | 1 |
| 9100-0004 | 10 Year/100,000 Mile Structural Warranty for Alum Cab / Body - Statement of Warranty. | 1 |
| 9100-0005 | 10 Year Stainless Steel Plumbing Warranty - Statement of Warranty. | 1 |
| 9100-0019 | 10 Year Limited Paint and Perforation Warranty - For Sikkens Paint. | 1 |
| SUPPORT, DELIVERY, INSPECTIONS AND MANUALS | | |
| 9300-0009 | Manuals, Operator and Service CD-ROM. | 1 |
| 9300-0316 | Fire Apparatus Safety Guide published by FAMA, latest edition. | 1 |

PRICE - 2017 E-ONE RESCUE PUMPER - COMMERCIAL CHASSIS - $276,281

# STATE OF OHIO TERM SCHEDULE

## 4200 SURFACE RD
## COLUMBUS, OH 43228

*Quote No: 70545*

8/27/2016

Quote Rev:29 Drawing Rev:6

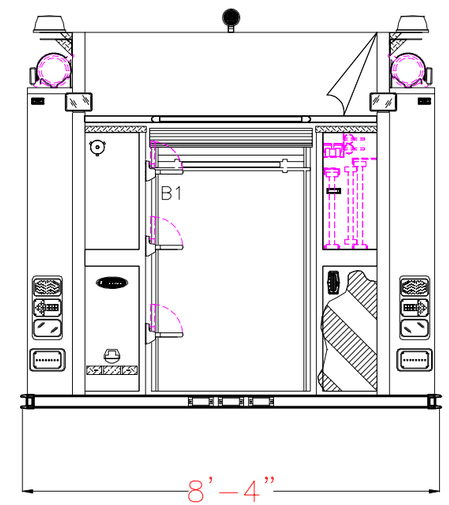


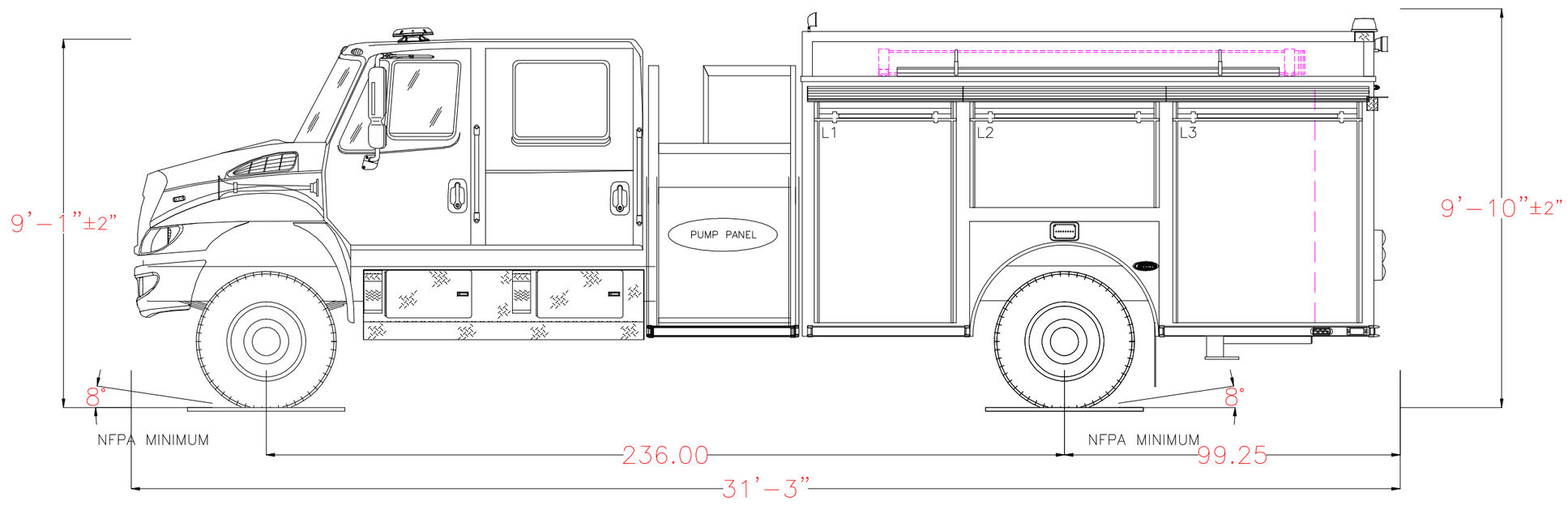


POWERED BY EZDRAW

Notice: This drawing provides a GENERAL REPRESENTATION of the vehicle configuration and should be used for evaluation purposes. The respective dimensions shown,including overall height and length, are estimates and may vary due to manufacturing processes. All other items such as lighting and fixtures, plumbing, compartmentation, and other generally assembled details are shown for REFERENCE ONLY and may not be a direct reflection of the final truck configuration. In ALL situations where this drawing may conflict with the specifications, THE SPECIFICATIONS, AS REFLECTED IN THE APPROVED SHOP ORDER, SHALL PREVAIL. Unless otherwise specified, the proposed apparatus will be manufactured to the latest NFPA recommendations as well as other applicable federally regulated safety regulations. E-One reserves the right to engineer and incorporate design improvements and changes without notice, while adhering to the intent of the specification.

| 1250 GPM PUMP<br>0 TOTAL VOLUME<br>0 TOTAL FOAM | HOSE LOADS : |
|---|---|
| | |
| | |
| | |
| | |

| | OPENING | | INTERIOR DIMENSIONS | | | | |
|---|---|---|---|---|---|---|---|
| COMPT. | WIDTH | HEIGHT | WIDTH | LOWER HEIGHT | LOWER DEPTH | UPPER HEIGHT | UPPER DEPTH |
| L1 | 40 | 59.75 | 42 | 30 | 26 | 26.75 | 26 |
| L2 | 54 | 25.75 | 56 | N/A | N/A | 26.75 | 26 |
| L3 | 54 | 59.75 | 56 | 30 | 26 | 26.75 | 26 |
| R1 | 40 | 59.75 | 42 | 30 | 26 | 26.75 | 12 |
| R2 | 54 | 25.75 | 56 | N/A | N/A | 26.75 | 12 |
| R3 | 54 | 59.75 | 56 | 30 | 26 | 26.75 | 12 |
| B1 | 36 | 45 | 38 | 30 | 26 | N/A | N/A |

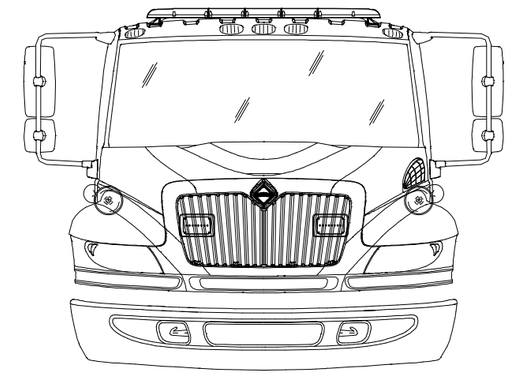

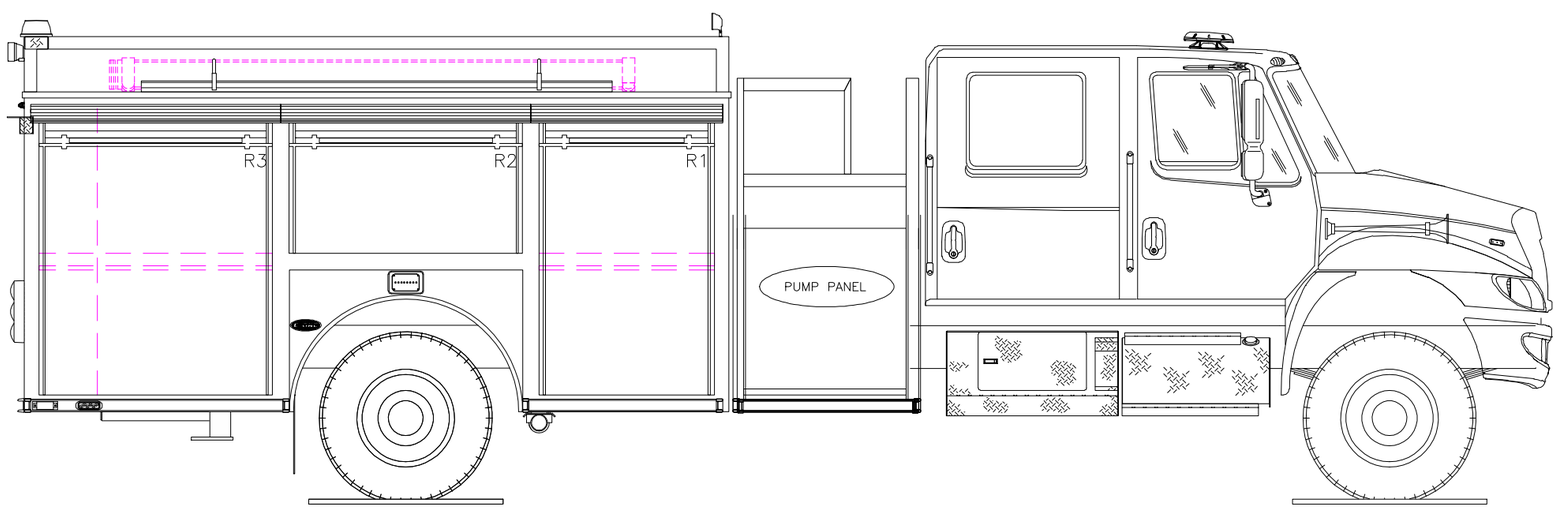


POWERED BY EZDRAW

Fire Apparatus Quotation for:
STATE OF OHIO TERM SCHEDULE

Quotation Number: 77020 Rev: 15

Unit Description: PAEM-COMM
Quote Description: Pumper, Aluminum, eMAX, Commercial

| Salescode | Extended Description | Qty |
|---|---|---|
| **TESTING COMPLIANCE STANDARD** | | |
| 1001-0065 | The E-ONE supplied components of the vehicle shall meet the requirements of NFPA 1901, 2016 edition. | 1 |
| 3090-0002 | OAH. Unit has no overall height restrictions. | 1 |
| 3090-0004 | OAL. Unit has no overall length restrictions. | 1 |
| 3090-0007 | Hosebed hoseload allowance on the apparatus shall be 1200 lbs. | 1 |
| 3340-1137-12C | Equipment allowance on the apparatus shall be 2500 lbs. This allowance is in addition to the weight of the hoses and ground ladders listed in the shop order as applicable. | 1 |
| **CHASSIS PREP** | | |
| 1020-0011 | Comm Chas Prep E-1 Supp-Non FL. International | 1 |
| **FRAME ASSEMBLY** | | |
| 1250-0011 | Rear underbody support frame. | 1 |
| **AXLE OPTIONS** | | |
| 1025-0043 | Front axle for commercial chassis 14,000 lb. rating. | 1 |
| 1025-0047 | Rear axle for commercial chassis 26,000 lb. rating. | 1 |
| **WHEEL OPTIONS** | | |
| 1050-0007 | Front axle wheel trim kit. Includes stainless steel lug nut covers (chrome plated plastic if applicable) and center cap with E-ONE logo. Note: Center cap will have an inspection port IPO a logo if equipped with Stemco oil seals. | 1 |
| 1050-0008 | Rear axle (single) wheel trim kit. Includes stainless steel lug nut covers (chrome plated plastic if applicable) and center cap with E-ONE logo. E-ONE custom chassis w/steel wheels will have chrome plated plastic lug covers. | 1 |
| **TIRE OPTIONS** | | |
| 1060-0117 | RWC AirGuard LED tire pressure monitoring valve stem caps (6) for single rear axle applications. | 1 |
| **AIR SYSTEM OPTIONS** | | |
| 1110-0010-277 | Air inlet. To charge brake system. Commercial chassis only. Location: driver's door step area. | 1 |
| 1110-0064 | Dual Hadley Hood Mounted Air Horns with Driver and Officer Foot Switches to be Supplied and Installed by International. | 1 |
| **ENGINES & TRANSMISSIONS** | | |
| 1200-0126 | Chassis speed to be electronic limited and not to exceed a maximum of 68 MPH. Note: Speed rating may be lower based on OEM tire ratings/top speed limitations provided on chassis. | 1 |
| 1200-0296 | International N9 engine, 330 HP SCR. | 1 |
| **CHASSIS OPTIONS** | | |
| 1680-0011 | Tow eyes rear below body, painted. | 1 |
| 1680-0078 | Tow hooks front OEM. Not available with extended E-ONE installed front bumper. Tow hooks are OEM supplied with chassis. | 1 |
| 1680-0235-R01 | The batteries to be located under left hand side of cab. | 1 |
| 1680-0323 | Diamond plate trim package for a (4) door International. Includes a full length driver side and officer side trim that will utilize pieces already supplied by the OEM. For International cabs with SCR and | 1 |

| | | |
|---|---|---|
| | DEF. | |
| **CAB MODEL** | | |
| 1500-0011 | Four door Navistar 4400 4x2. | 1 |
| **CAB BADGE PACKAGE** | | |
| 1610-0000 | Cab and body to have applicable E-ONE logos. | 1 |
| **CAB DOOR OPTIONS** | | |
| 1550-0059-000-G6 | Reflective Red/Lemon Yellow printed striping positioned in the "A" formation located on the cab door panels. | 1 |
| **MISC EXTERIOR CAB OPTIONS** | | |
| 1675-0007 | Diesel fuel only label. | 1 |
| **SEATS** | | |
| 1685-0032 | Seating capacity tag of five occupants. | 1 |
| **CAB ELECTRICAL OPTIONS** | | |
| 1750-0024-277-04 | Auto-Eject receptacle inlet 20 amp located driver's door step area with a Yellow cover. | 1 |
| 1750-0343 | Battery charger E-ONE LPC 20. 120 volt inlet, 20 amp output. | 1 |
| **BODY COMPT LEFT SIDE** | | |
| 3100-0245 | Driver side body with full height 60" wide forward and 56" wide rearward compartmentation. Includes (1) 56" wide compartment over the wheel well. Side Mount eMAX only. | 1 |
| **BODY COMPT RIGHT SIDE** | | |
| 3120-0403 | Officer side body with full height 60" wide forward and 56" wide rearward compartmentation. Includes (1) 56" wide compartment over the wheel well and one (1) storage tunnel located behind the upper (3) compartment back walls. | 1 |
| **BODY COMPT REAR** | | |
| 3110-0013 | Full Height Rear Compartment with Officer Side Storage Tunnel. Includes smooth plate panels and storage access door with push button latch. | 1 |
| 3340-0102 | Angled (Boston style) style tailboard corners. | 1 |
| 3340-0319 | Bolt-on diamond plate 10" tailboard (full width of body). For use with rear ladder application. Includes handrails- (1) vertical on trailing edge of body opposite side of ladder and handrail(s) horizontal below hosebed. | 1 |
| **BODY MODULE FRONT** | | |
| 3125-0005 | eMAX Forward body configuration - SM. Includes a lower double preconnect storage area, upper transverse storage area, rack in upper storage area for (2) backboards (vertical stored offset forward - sleeve each side of center pump access), center front pump access doors and removable center floor in upper area. | 1 |
| **DOORS** | | |
| 3300-0017-004 | Door roll up short (up to 45") with satin finish ROM. Location(s): L2. | 1 |
| 3300-0017-016 | Door roll up short (up to 45") with satin finish ROM. Location(s): R2. | 1 |
| 3300-0019-003 | Door roll up tall (greater than 45") with satin finish ROM. Location(s): L1. | 1 |
| 3300-0019-005 | Door roll up tall (greater than 45") with satin finish ROM. Location(s): L3. | 1 |
| 3300-0019-015 | Door roll up tall (greater than 45") with satin finish ROM. Location(s): R1. | 1 |
| 3300-0019-017 | Door roll up tall (greater than 45") with satin finish ROM. Location(s): R3. | 1 |
| 3300-0019-027 | Door roll up tall (greater than 45") with satin finish ROM. Location(s): B1. | 1 |
| **SHELVES** | | |
| 3370-0025-101 | Shelf, permanent shelf. Locate in R1 at offset (above extrusion if applicable). | 1 |
| 3370-0025-102 | Shelf, permanent shelf. Locate in R3 at offset (above extrusion if applicable). | 1 |
| 3370-0052-003 | Adjustable shelf (J-Style) for non-transverse compartments 16" or greater in depth. Location: L1. | 1 |
| 3370-0052-005 | Adjustable shelf (J-Style) for non-transverse compartments 16" or greater in depth. Location: L3. | 1 |
| 3370-0052-027 | Adjustable shelf (J-Style) for non-transverse compartments 16" or greater in depth. Location: B1. | 1 |

| | | |
|---|---|---|
| 3370-0054-003 | Tracks for adjustable shelf and/or adjustable tray in compartments 16" or greater in depth. Location: L1. | 1 |
| 3370-0054-005 | Tracks for adjustable shelf and/or adjustable tray in compartments 16" or greater in depth. Location: L3. | 1 |
| 3370-0054-027 | Tracks for adjustable shelf and/or adjustable tray in compartments 16" or greater in depth. Location: B1. | 1 |
| 3370-0054-073 | Tracks for adjustable shelf and/or adjustable tray in compartments 16" or greater in depth. Location: R1 lower. | 1 |

| TRAYS / TOOLBOARDS | | |
|---|---|---|
| 3380-0077-015 | Tray, adjustable roll-out with 500 lbs. capacity and a gas shock. Location(s): R1. | 1 |

| COVERS | | |
|---|---|---|
| 3305-0007-000-02 | Vinyl Red hose bed cover with attached rear flap(s). | 1 |
| 3305-0016-000-02 | Vinyl Red speedlay side covers. | 1 |

| PUMP PANELS | | |
|---|---|---|
| 3134-0079 | The side pump intake / discharge panels to be stainless steel. eMAX only. | 1 |
| 3134-0080 | Pump operator control panel in driver side forward body compartment to be stainless steel. eMAX only. | 1 |
| 3134-0095 | The upper gauge panel on the enclosed pump panel is to be hinged forward. Side mount eMAX only. | 1 |

| MISC PUMP PANEL OPTIONS | | |
|---|---|---|
| 4460-0003 | Pump panel tags color coded per NFPA compliance. | 1 |
| 4460-0058 | Push-pull handles on the pump operator's panel to be oriented vertical. eMAX only. | 1 |

| PUMP MODULE OPTIONS | | |
|---|---|---|
| 3136-0000-202 | Air horn switch at pump panel. Switch to be labeled ''Evacuation Alert''. Location: driver side pump panel. | 1 |
| 3136-0058 | E-ONE logo mounted one each side on pump module/preconnect panels. Logos to be sized as applicable to available space on panels. | 1 |
| 3136-0205 | Removable Aluminum Speedlay Tray(s) with slotted floor to prevent the accumulation of water and allow for ventilation of wet hose. Includes vertical slotted hand hold cutouts on each end to facilitate easy removal of the hose tray. No lip, No grab rod. | 2 |

| WATER TANK | | |
|---|---|---|
| 4010-0099 | Fill tower(s) to be located offset to officer side of water tank. | 1 |
| 4010-0177 | 780 Gallon "R" Water Tank. UPF Poly III color fill towers. Note: Any foam cell(s) and/or storage options through the tank will reduce the overall water capacity. | 1 |

| TANK PLUMBING | | |
|---|---|---|
| 4450-0010 | 2" tank fill Akron manual valve. | 1 |
| 4450-0121 | 3" Tank to pump Akron air actuated valve w/4" tank connection. | 1 |

| LADDER STORAGE / RACKS | | |
|---|---|---|
| 3365-0028 | Hard Suction Storage Rack. Driver side compartment top. Includes spring hold downs and scuff plates behind spring mounts (as applicable). | 1 |
| 3365-0035 | Hard Suction Storage Rack. Officer side compartment top. Includes spring hold downs and scuff plates behind spring mounts (as applicable). | 1 |
| 3365-0049 | Brand of ladders capable of being carried on unit to be Alco-Lite. | 1 |
| 3365-0087-Z71 | The length of ladders capable of being stored shall be the following: 24' 2-section, 14' roof ladder and 10' attic ladder w/shoes. | 1 |
| 3365-0149-O97 | Storage tunnel capable of holding: (1) 2-section, (1) roof, (1) attic, (2) pike poles, (1) backboard in Officer. | 1 |

| HANDRAILS / STEPS | | |
|---|---|---|
| 3110-0099-524 | NFPA hose bed access ladder. Zico model RL12 for increased visibility of rear outboard body mounted DOT/NFPA lighting. Includes required step lights and additional hand rail(s) if applicable. Location: rear of body driver side. | 1 |
| 3330-0158 | Step below side intake / discharge panel (PR). Gator grip diamond plate. Each location requires a minimum of (1) handrail / handhold per NFPA. eMAX only. | 1 |

| | | |
|---|---|---|
| MISC BODY OPTIONS | | |
| 3340-0004 | Hosebed above the booster tank. Includes forward hosebed and tower(s) cover plate work (as applicable). Hosebed adjustable divider extrusion rearward of the furthest tower is to run full width of the hosebed (as is practical with other hosebed mounted equipment). | 1 |
| 3340-0035 | Divider Long. To run full length of hose bed (front to rear). | 1 |
| 3340-0049 | Hosebed storage pan. Locate in forward area of hosebed. | 1 |
| 3340-0074 | Body mainframe and hosebed side assemblies for a 85" high body. | 1 |
| 3340-0093 | Mud flaps, rear, black with E-ONE logo. | 1 |
| 3340-0110 | The rear of each hose bed divider to have a hand hold cut-out(s). | 1 |
| 3340-0302 | Long hose bed divider(s) to be held short to allow for adjustability of the divider(s) with hose bed preconnect(s) if applicable per hose loading and option locations. | 1 |
| 3340-0486 | Diamond plate single axle wheel well. Includes bolt-on composite wheel well liners and bolt-on polished alum fenderettes. | 1 |
| 3340-0494 | Rubrail for the body. | 1 |
| 3340-0680 | Body mainframe layout line to be 23". Includes body and all applicable modules. | 1 |
| SCBA BOTTLE STORAGE | | |
| 3320-0100 | Strap(s), loop style to retain SCBA bottle(s). Locate one per bottle in each exterior storage compartment. | 1 |
| 3320-0187-495 | Cast Products brand (1) SCBA bottle storage with gasketed door and push button latch. Door shall NOT cover the recessed fuel fill if located adjacent to the SCBA storage. Location: driver side rear wheel well offset forward | 1 |
| 3320-0187-497 | Cast Products brand (1) SCBA bottle storage with gasketed door and push button latch. Door shall NOT cover the recessed fuel fill if located adjacent to the SCBA storage. Location: driver side rear wheel well offset rearward | 1 |
| 3320-0187-498 | Cast Products brand (1) SCBA bottle storage with gasketed door and push button latch. Door shall NOT cover the recessed fuel fill if located adjacent to the SCBA storage. Location: officer side rear wheel well offset forward | 1 |
| 3320-0187-500 | Cast Products brand (1) SCBA bottle storage with gasketed door and push button latch. Door shall NOT cover the recessed fuel fill if located adjacent to the SCBA storage. Location: officer side rear wheel well offset rearward | 1 |
| PUMPS | | |
| 4005-0030 | Rating 1250 GPM | 1 |
| 4005-0204 | E-ONE 1250-1500 GPM pump, single stage. Requires primer option. | 1 |
| PUMP CERTIFICATION | | |
| 4475-0000 | Pump certification 750-2250 GPM | 1 |
| PUMP OPTIONS | | |
| 4015-0053-198 | Steamers to be Flush + 1". Location: driver's side. | 1 |
| 4015-0053-199 | Steamers to be Flush + 1". Location: officer's side. | 1 |
| 4015-0098 | Manual operated master pump drain. The master drain shall be clearly marked and placed in accessible location on pump panel. | 1 |
| 4015-0133 | Anode for Darley pump - (1) intake side. | 1 |
| 4015-0210 | Pump cooler with Innovative Control 1/4 turn valve with "T" handle and label. | 1 |
| 4015-0240 | Darley electric primer (oil-less). | 1 |
| INTAKES | | |
| 4440-0005 | 2.5" Left Intake Akron Manual Valve. | 1 |
| INTAKE OPTIONS | | |
| 4445-0048 | Intake pressure relief valve, Task Force Tips. | 1 |
| DISCHARGES AND PRECONNECTS | | |
| 4415-0014-581 | 2.5" Left Pump Panel Discharge Akron Manual Valve. Location: left side discharge 1. | 1 |
| 4415-0014-582 | 2.5" Left Pump Panel Discharge Akron Manual Valve. Location: left side discharge 2. | 1 |
| 4415-0018 | 2.5" left front hose bed discharge Akron manual valve. | 1 |
| 4415-0041 | 3" Deck Gun Discharge, Akron manual valve. | 1 |
| 4415-0054-583 | 4" Right Pump Panel Discharge with 3" Akron Manual Valve (Waterous pumps noted location to be | 1 |

| | | |
|---|---|---|
| | forward lower port). Location: right side discharge 1. | |
| 4415-0065 | 1.5" Double Speedlay with Akron Manual Valves. | 1 |
| 4417-0106-685 | Deck gun piping to be positioned driver side of hose bed storage pan. | 1 |
| **DISCHARGE OPTIONS** | | |
| 4417-0175 | Innovative Controls push/pull valve controls with locking T handles. | 1 |
| 4417-0176 | Innovative Controls 3/4" bleeder/drain valve include lift lever with ergonomic grip. | 7 |
| 4417-0185 | Innovative Controls discharge and intake bezels with integral color code and verbiage for side mount pump panel. | 1 |
| **PRESSURE GOVERNORS** | | |
| 4465-0011 | Class 1 TPG pressure governor. Includes, water, oil, volt and tachometer. | 1 |
| **GAUGES** | | |
| 4435-0083 | Innovative Controls 10 LED SL series water tank level gauge. On pump panel. | 1 |
| 4435-0246 | 2.5" Innovative Controls stainless steel case pressure gauge (0-400) with color code bezel. | 7 |
| 4435-0247 | 4" Innovative Controls stainless steel case master pressure gauges with bezel. Intake 30-0-400, and discharge 0-400. | 1 |
| **ELECTRICAL SYSTEMS** | | |
| 5010-0014-E12 | Vehicle data recorder for commercial cab - 2009 NFPA compliant. Includes occupant detection with display. Display location: outboard on driver's side overhead console. | 1 |
| 5010-0036 | V-MUX Electrical system for pumper / tanker / rescue. | 1 |
| 5010-0059-339 | VFD Text display for V-MUX electrical system. Location: center of dash. | 1 |
| **LIGHT BARS** | | |
| 5300-0267 | Light bar Whelen Justice model JE2NFPA 56" LED with clear lenses and MKEZ7 mounts. N/A on Vista roofs with front facing windows. Includes (4) red corner facing LIN6 LED lights, (6) forward facing CON3 Linear LED lights; (4) red, (2) white. Location: Centered on the front cab roof. | 1 |
| **WARNING LIGHT PACKAGES** | | |
| 5550-0128-535 | Whelen Super LED lower level warning light package. Includes (6) red 600 LED light heads, (2) red LIN3 lights and (2) red 500 LED light heads w/chrome flanges. Locate side facing lights: at forward most position, centered in rear wheel well, and side facing at rear of body in rubrail if equipped. | 1 |
| **WARNING LIGHTS** | | |
| 5600-0078-479-06 | Whelen Super LED beacon (PR) model L31H with Red domes. Location rear upper body on aerial style brackets. | 1 |
| 5600-0105-170 | Hazard (door ajar) light 2" LED. Location: center overhead. | 1 |
| **SIRENS** | | |
| 5500-0015 | Whelen model 295SLSA1 siren with microphone (replaced 295HFSA1). | 1 |
| 5500-0024-170 | The electronic siren control is to be located on the center overhead. | 1 |
| **SPEAKERS** | | |
| 5510-0028 | Speaker Federal Dynamax ES100. Located officer's side behind tow hook. Navistar 4400 chassis only. | 1 |
| **DOT LIGHTING** | | |
| 5150-0017 | License plate light LED with chrome housing located at the rear of the body. | 1 |
| 5150-0022 | Marker light LED body package. Commercial pumper bodies only. | 1 |
| 5150-0056 | Whelen 600 series LED vertical mount tail lights. Includes LED stop/tail, arrow turn and back-up lights with vertical Cast 3 housing and weatherproof connectors. | 1 |
| **LIGHTS - COMPARTMENT, STEP & GROUND** | | |
| 5380-0144 | Compartment light package Amdor Luma-Bar LED for medium bodies. Includes two lights per compartment (four if transverse). | 1 |

| | | |
|---|---|---|
| 5380-0182 | Ground light package EON LED - large. | 1 |
| **LIGHTS - DECK AND SCENE** | | |
| 5390-0007 | Deck/scene light circuit wiring through chassis reverse. Requires rear deck or scene light. | 1 |
| 5390-0076 | Hose bed light Truck-Lite LED model 81380. Locate at front of hose bed. Switched with work light switch in cab. | 1 |
| 5390-0152-396 | Whelen 600 series gradient Super LED surface mounted scene lights (PR) with weatherproof connectors. Switch in cab (driver and officer side lights switched separately). Locate (1) each side rear compartment face up high. | 1 |
| **LIGHTS - NON-WARNING** | | |
| 5400-0003 | Engine compartment light (EA). | 1 |
| 5400-0010 | Incandescent pump compartment light (EA). | 1 |
| 5400-0031 | Pair of Cab Dome Large Lights mounted driver and officer side front. N/A on E-One Chassis. Required on Comm Chassis. | 1 |
| 5400-0032 | Pair of Cab Dome Large Lights mounted driver and officer side Rear. N/A on E-One Chassis or two door commercial chassis. Required on Comm Chassis. | 1 |
| 5400-0039 | Spotlight Specialty 2150 hand held located on officer's side of cab dash - hardwired. | 1 |
| 5400-0137 | Pump panel LED light package for side mount eMAX. Includes (6) TecNiq EON lights with S/S housings, located (3) each side above lower side intake/discharge panels. Includes S/S light shields. SM eMAX only. | 1 |
| **CONTROLS / SWITCHES** | | |
| 5100-0007-198 | Foot switch to control electronic siren located driver's side. | 1 |
| **MISC ELECTRICAL** | | |
| 5110-0017 | Back-up alarm 97 dB. | 1 |
| **LIGHTS - QUARTZ** | | |
| 5450-0123-429 | Light Whelen Pioneer Plus LED model PFP2 12V with PBAPEDD pedestal mount. Includes switch in cab (side facing lights switched separately). Location(s): driver side forward compartment top. | 1 |
| 5450-0123-431 | Light Whelen Pioneer Plus LED model PFP2 12V with PBAPEDD pedestal mount. Includes switch in cab (side facing lights switched separately). Location(s): officer side forward compartment top. | 1 |
| **ELBOWS** | | |
| 7400-0004 | Elbow 30 degree chrome swivel w/2.5"FNST x 2.5"MNST. | 2 |
| **ADAPTERS** | | |
| 7200-0026 | Swivel Connector 4" FNST x 5" Storz 30 Deg Elbow with Tethered Cap. | 1 |
| **HAND TOOLS** | | |
| 7600-0005 | Pike Pole Fiberglass 6'. | 1 |
| 7600-0007 | Pike Pole Fiberglass 10'. | 1 |
| **HOSE / NOZZLES** | | |
| 7700-0004 | Hard suction hose 6" X 10' with Pyrolite couplings. | 2 |
| **GROUND LADDERS** | | |
| 7800-0007 | Alco-Lite PRL-14' roof ladder. | 1 |
| 7800-0016 | Alco-Lite PEL-24' 2-section extension ladder. | 1 |
| 7800-0032 | Alco-Lite FL-10, 10' folding ladder w/safety shoes. | 1 |
| **MISC LOOSE EQUIPMENT** | | |
| 7900-0010 | Chrome Barrel Strainer 6" NST. | 1 |
| 7900-0014 | DOT Required Drive Away Kit - Kit includes three (3) triangular warning reflectors with carrying case. This kit is for the end user and is to remain with the truck. | 1 |
| **EXTERIOR PAINT** | | |
| 8100-0071 | Undercoating E-ONE. | 1 |
| 8100-0116 | Rear body surface to have a sanded finish (not painted job color). Includes hinged doors that do not | 1 |

| | | |
|---|---|---|
| | have discrete sales codes and removable panels. | |
| 8100-0182-000-17 | Paint Body - Small - For Pumpers, Rear Mounts, S/A Tankers/Wetsides and Rescues. Sikkens paint. Color: FLNA3225E-1 Red. | 1 |
| 8100-0442-000-17 | International cab paint (by chassis OEM). Paint to match FLNA3225E-1 Red. | 1 |
| STRIPING | | |
| 8300-0002-859-12 | NFPA Scotchlite Stripe - 4" wide and straight on front/sides of cab and sides/rear of body. Color: White. Location: bottom of stripe flush with bottom of cab and straight back. | 1 |
| 8300-0042 | White rubrail scotchlite insert. | 1 |
| 8300-0084-000-72 | Chevron "A" style 6" printed sheet Scotchlite striping full width on rear of body. Includes rear facing extrusions, panels and doors. Colors to be Yellow/Red. | 1 |
| 8300-0313 | Yellow line to indicate designated standing / walking areas above 48" high in compliance with 2016 NFPA 1901. Line to be 1" wide. Steps, ladders and areas with a railing or structure at least 12" high are excluded from requiring the line. | 1 |
| WARRANTY / STANDARD & EXTENDED | | |
| 9100-0000 | Standard 1 Year Warranty. | 1 |
| 9100-0004 | 10 Year/100,000 Mile Structural Warranty for Alum Cab / Body - Statement of Warranty. | 1 |
| 9100-0005 | 10 Year Stainless Steel Plumbing Warranty - Statement of Warranty. | 1 |
| 9100-0019 | 10 Year Limited Paint and Perforation Warranty - For Sikkens Paint. | 1 |
| SUPPORT, DELIVERY, INSPECTIONS AND MANUALS | | |
| 9300-0009 | Manuals, Operator and Service CD-ROM. | 1 |
| 9300-0316 | Fire Apparatus Safety Guide published by FAMA, latest edition. | 1 |

PRICE - 2017 E-ONE EMAX PUMPER - COMMERCIAL PUMPER - $294,818

# STATE OF OHIO TERM SCHEDULE

## 4200 SURFACE RD
## COLUMBUS, OH 43228

*Quote No: 77020*

8/27/2016

Quote Rev:15 Drawing Rev:5

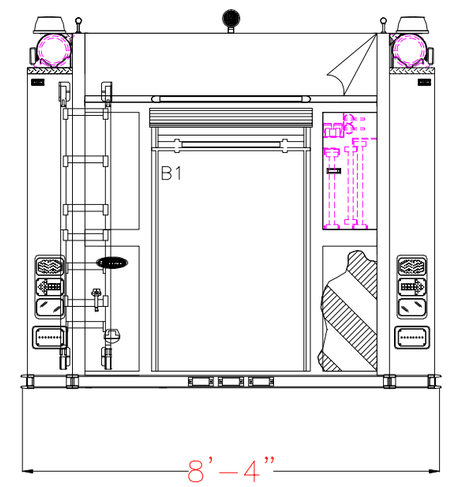


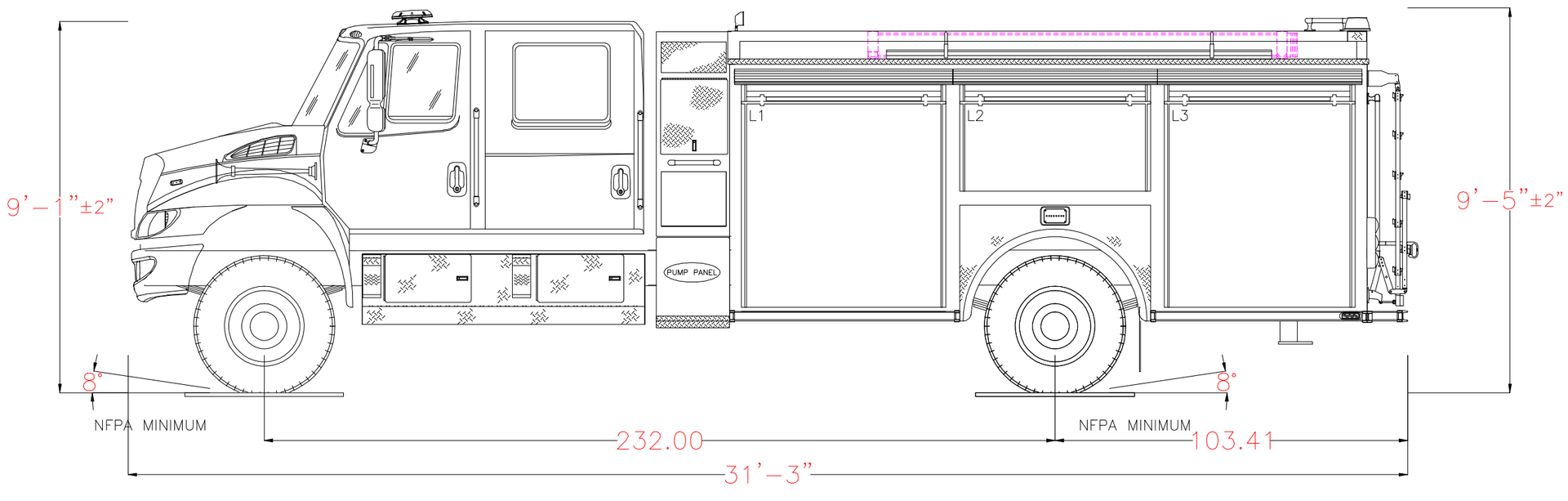


POWERED BY EZDRAW

Notice: This drawing provides a GENERAL REPRESENTATION of the vehicle configuration and should be used for evaluation purposes. The respective dimensions shown,including overall height and length, are estimates and may vary due to manufacturing processes. All other items such as lighting and fixtures, plumbing, compartmentation, and other generally assembled details are shown for REFERENCE ONLY and may not be a direct reflection of the final truck configuration. In ALL situations where this drawing may conflict with the specifications, THE SPECIFICATIONS, AS REFLECTED IN THE APPROVED SHOP ORDER, SHALL PREVAIL. Unless otherwise specified, the proposed apparatus will be manufactured to the latest NFPA recommendations as well as other applicable federally regulated safety regulations. E-One reserves the right to engineer and incorporate design improvements and changes without notice, while adhering to the intent of the specification.

| 1250 GPM PUMP<br>0 TOTAL VOLUME<br>0 TOTAL FOAM | HOSE LOADS : |
|---|---|
| | |
| | |
| | |
| | |

| | OPENING | | INTERIOR DIMENSIONS | | | | |
|---|---|---|---|---|---|---|---|
| COMPT. | WIDTH | HEIGHT | WIDTH | LOWER HEIGHT | LOWER DEPTH | UPPER HEIGHT | UPPER DEPTH |
| L1 | 58 | 59.75 | 60 | 30 | 26 | 26.75 | 26 |
| L2 | 54 | 25.75 | 56 | N/A | N/A | 26.75 | 26 |
| L3 | 54 | 59.75 | 56 | 30 | 26 | 26.75 | 26 |
| R1 | 58 | 59.75 | 60 | 30 | 26 | 26.75 | 12 |
| R2 | 54 | 25.75 | 56 | N/A | N/A | 26.75 | 12 |
| R3 | 54 | 59.75 | 56 | 30 | 26 | 26.75 | 12 |
| B1 | 36 | 45 | 38 | 30 | 26 | N/A | N/A |

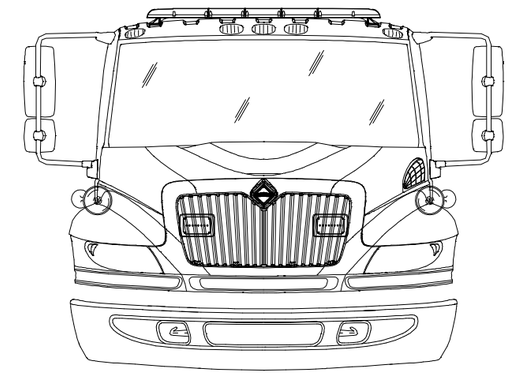

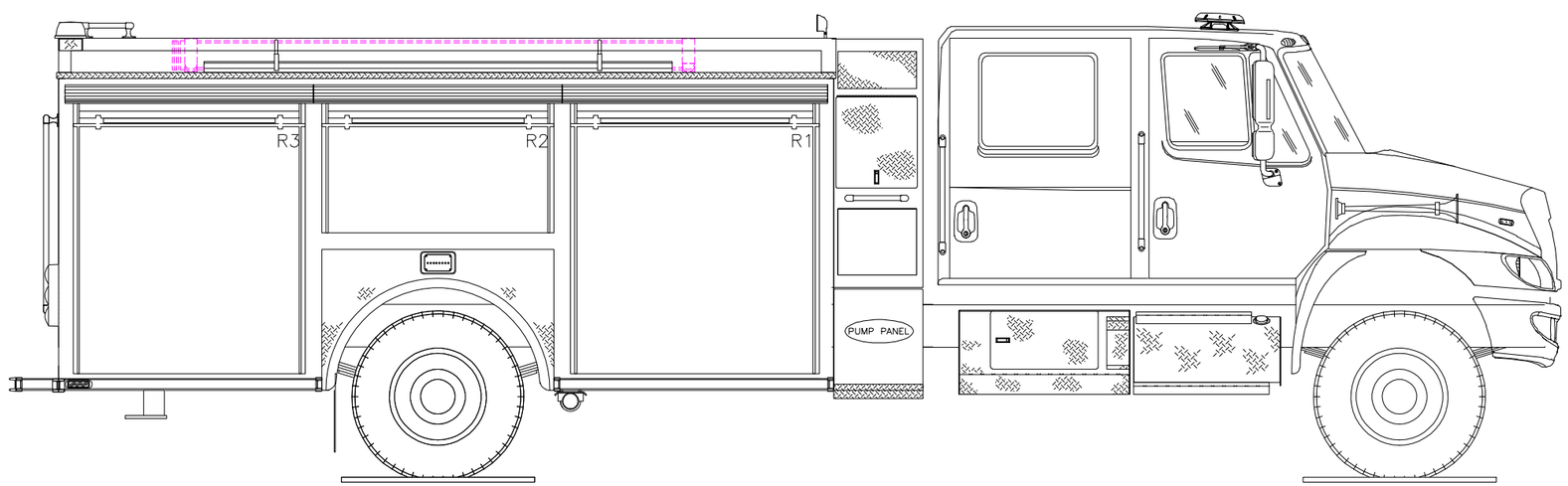


POWERED BY EZDRAW

# E-ONE OHIO STATE TERM SCHEDULE 2017 OPTIONS PRICE BOOK
## PUMPERS - COMMERCIAL CHASSIS

| Item No. | Description | |
|---|---|---|
| **COMMERCIAL CHASSIS** | | |
| 1500-0008 | Two door Freightliner M2 106 4x2. 330hp. 12f/23r | 95488 |
| 1500-0009 | Four door Freightlner M2 106 4x2. 330hp. 14.6f/26r | 105544 |
| 1500-0010 | Two door International 4400 4x2. 330 hp. 12f/26r | 93767 |
| 1500-0011 | Four door Navistar 4400 4x2. 330hp. 14f/26r | 102268 |
| **COMMERCIAL CHASSIS MODIFICATIONS** | | |
| 1020-0010 | Comm Chassis Prep E-1 Supp-FL. | 3635 |
| 1020-0011 | Comm Chas Prep E-1 Supp-Non FL. International | 3635 |
| 1020-0019 | Comm Chas Prep E-1 Supp-Non FL relocate batteries to [#LOC]. | 6549 |
| 1050-0029 | Front & rear axle wheel simulator kit. Includes stainless steel wheel simulator and center cap with E-ONE logo. | 2001 |
| 1050-0073 | Wheel trim package. For use with steel or aluminum wheels. | 517 |
| 1050-0080 | Trim Kit Lug nut covers for front and rear axle wheels. Includes lug nut covers only (chrome plated plastic if applicable) | 213 |
| 1060-0049 | Tyron tire pressure monitoring system model TPMS. Includes wireless remote display in cab. | 1314 |
| 1060-0050 | Tire pressure monitoring valve stem caps. | 192 |
| 1060-0053 | PressurePro tire pressure monitoring system for single rear axle units. Includes bail mounted display in cab. | 1117 |
| 1060-0054 | PressurePro tire pressure monitoring system for tandem rear axle units. Includes bail mounted display in cab. | 1337 |
| 1060-0081 | PressurePro tire pressure monitoring system for single rear axle units. Includes electrical system integrated display in cab. | 1117 |
| 1060-0094 | Cat's Eye model 6120-AB00 single rear axle tire pressure monitoring system. For use on 120 PSI tires. Includes braided lines. | 935 |
| 1060-0103 | Cat's Eye model 6130-AB00 single rear axle tire pressure monitoring system. For use on 130 PSI tires. Includes braided lines. | 935 |
| 1060-0117 | RWC AirGuard LED tire pressure monitoring valve stem caps (6) for single rear axle applications. | 197 |
| 1060-0123 | RWC AirGuard LED tire pressure monitoring valve stem caps (2) front only. For use with rear axle Crossfire equalization systems. | 80 |
| 1060-0128 | Tire pressure monitoring integrated with V-MUX multiplex electrical system. Includes wheel mounted sensors. Requires Vista display. For use with single rear axle units. | 1403 |
| 1060-0129 | Tire pressure monitoring integrated with V-MUX multiplex electrical system. Includes wheel mounted sensors. Requires Vista display. For use with tandem rear axle units. | 1917 |
| 1110-0001 | Air inlet auto eject. Includes weatherproof gasketed cover. [#LOC]. | 546 |
| 1110-0009 | Air horns on hood pair. Requires control. | 688 |
| 1110-0010 | Air inlet. To charge brake system. Commercial chassis only. Location: [#LOC]. | 424 |
| 1110-0012 | Air outlet off front ACC tank. It shall be located [#LOC]. | 424 |
| 1110-0013 | Air horns shut-off valve. Located in cab accessible by driver. | 125 |
| 1110-0026 | Air horns recessed in bumper (PR). | 941 |
| 1110-0027 | Isolated air tank. Includes pressure protection valve. | 639 |
| 1110-0041 | Air horns Grover recessed in bumper (PR). | 1146 |
| 1110-0044 | Air inlet Auto-Eject. Includes [#COL] weatherproof gasketed cover. Location: [#LOC]. | 546 |
| 1110-0046 | Kussmaul 12V Auto Drain. For use with Kussmaul air compressor. | 531 |
| 1110-0052 | Air horns recessed behind bumper (PR). Includes E-ONE grilles on bumper. | 1183 |
| 1110-0053 | Air horns Grover recessed in front bumper. (1) air horn 21" long (1) air horn 24.5" long | 1199 |
| 1110-0055 | Air horns will alternate from driver to officer. | 456 |
| 1110-0058 | Air horns recessed in bumper (PR) with bells behind bumper. | 1007 |
| 1110-0066 | Air horns Grover recessed in front bumper. (1) air horn 21" long (1) air horn 24.5" long. | 1406 |
| 1110-0068 | Dual Grover Hood Mounted Air Horns with Driver and Officer Foot Switches to be Supplied and Installed by E-One. | 1146 |
| 1110-0074 | Air horns Grover mounted to hood each side. (1) air horn 21" long (1) air horn 24.5" long. | 1409 |
| 1110-0082 | Air horns Grover model 2040 rectangular recessed in bumper (PR) with snow caps. | 1221 |
| 1110-0085 | Bumper mounted Grover 21" air horns. Controls required and provided separately. | 989 |
| 1110-0087 | Air inlet. To charge brake system. Commercial chassis only. Inlet to be located within the cab and accessable from the driver side door area. | 424 |
| 1110-0090 | Air horns Grover recessed in bumper (PR) with snow caps. | 1292 |
| 1110-0106 | Air horns Grover recessed behind bumper (PR). Includes E-ONE grilles on bumper. | 1389 |
| 1110-0112 | Martin-Horn No. 2297 GM. Includes set of (4) horns air compressor and snow caps for horns. Locate horns and compressor in cab. Horn compressor to be activated through switch in cab accessible to the driver. | 5971 |

| Item No. | Description | |
|---|---|---|
| 1110-0116 | Air horns Buell recessed in bumper (PR). | 1194 |
| 1110-0117 | Air horns Grover model 2040 rectangular recessed in bumper (PR). | 1221 |
| 1110-0124 | Air horns Grover recessed behind bumper (PR). Includes grilles (No Logo) on bumper. | 1389 |
| 1110-0135 | Air horns shut-off valve. Located on driver side overhead console. | 125 |
| 1110-0136 | Air horns shut-off valve. Located on officer side overhead console. | 125 |
| 1110-0138 | Air horns Grover model 2040 rectangular behind bumper (PR). Includes E-ONE grilles. | 1465 |
| 1110-0145 | Switch. Foot switch siren break. Includes: 25 degree mounting bracket. See photo on file for mounting instructions. Locate (1) officer side for left foot. | 158 |
| 1150-0054 | Hinged diamond plate lid for driver side bumper tray. Includes 1/4 turn latch and gas shock hold open. | 309 |
| 1150-0055 | Hinged diamond plate lid for center bumper tray. Includes 1/4 turn latch and gas shock hold open. | 340 |
| 1150-0056 | Hinged diamond plate lid for officer side bumper tray. Includes 1/4 turn latch and gas shock hold open. | 309 |
| 1150-0059 | Red vinyl lid with velcro fasteners for bumper tray driver side. | 203 |
| 1150-0060 | Red vinyl lid with velcro fasteners for bumper tray officer side. | 203 |
| 1150-0061 | Red vinyl lid with velcro fasteners for bumper tray center. | 203 |
| 1150-0062 | Black vinyl lid with velcro fasteners for bumper tray driver side. | 203 |
| 1150-0063 | Black vinyl lid with velcro fasteners for bumper tray officer side. | 203 |
| 1150-0064 | Black vinyl lid with velcro fasteners for bumper tray center. | 203 |
| 1150-0085 | Nylon black strap on officer side front bumper tray (EA). | 88 |
| 1150-0086 | Nylon black strap on driver side front bumper tray (EA). | 88 |
| 1150-0087 | Nylon black strap on center front bumper tray (EA). | 88 |
| 1150-0094 | Hinged diamond plate lid for driver side bumper tray. Includes D-Ring latch and gas shock hold open. | 338 |
| 1150-0095 | Hinged diamond plate lid for center bumper tray. Includes D-Ring latch and gas shock hold open. | 370 |
| 1150-0096 | Hinged diamond plate for officer side bumper tray. Includes D-Ring latch and gas shock hold open. | 338 |
| 1150-0102 | Diamond plate lid for driver hosetray. 5.25" high with chrome grab handle rubber hood latch gas shock and water stop angle. | 438 |
| 1150-0103 | Diamond plate lid for center hose tray 5.25" high with chrome grab handle rubber hood latch gas shock and water stop angle. | 438 |
| 1150-0104 | Diamond plate lid for officer hosetray. 5.25" high with chrome grab handle rubber hood latch gas shock and water stop angle. | 438 |
| 1150-0107 | Nylon black strap with clip release on officer side front bumper tray. | 156 |
| 1150-0108 | Nylon black strap with clip release on driver side front bumper tray. | 156 |
| 1150-0109 | Nylon black strap with clip release on center front bumper tray. The strap shall be attached to the inboard side of the tray and shall not reduce the overall tray capacity | 156 |
| 1150-0115 | Notch bumper tray lid for preconnected hose. Notch location: [#LOC]. | 153 |
| 1150-0118 | Bumper tray driver's side with slats 14 inches deep (approx 13 inches to slats). | 510 |
| 1150-0119 | Bumper tray center of bumper with slats 10 inches deep (approx 9 inches to slats). | 510 |
| 1150-0121 | Bumper tray center of bumper with slats 14 inches deep (approx 13 inches to slats). | 510 |
| 1150-0124 | Bumper tray officer's side with slats 14 inches deep (approx 13 inches to slats). | 510 |
| 1150-0128 | Notch front bumper tray for speaker/Q2B/radar. Will reduce front hose/equipment load. Center tray only. | 138 |
| 1150-0130 | Black nylon cargo net on center front bumper tray. | 334 |
| 1150-0131 | Extinguisher tube in front bumper extension. Location: [#LOC]. | 859 |
| 1150-0136 | Bumper tray center of bumper with slats 16 inches deep (approx 15 inches to slats). Mount tray 1" above gravel shield. | 609 |
| 1150-0138 | Bumper pan driver's side without slats 4 inches deep with strap. For use with suction strainer only. | 510 |
| 1150-0139 | Nylon black strap with aluminum quick release buckle for front bumper hose tray. Strap to attach to front and rear walls of tray down low as applicable. Location: [#LOC]. | 128 |
| 1150-0140 | Bumper tray center of bumper with slats 14 inches deep (approx 13 inches to slats). Mount tray 1" above gravel shield. | 609 |
| 1150-0145 | Single crosslay on top of the front bumper gravel shield. Tray to be "U" shape 10" wide x 8" high x the width of the gravel shield. Vinyl cover [#COL] with end flaps to cover crosslay velcro along front edge fastened along back. Requires 24" extension. | 937 |
| 1150-0146 | Water stop angle. Gravel shield mounted. Requires raised lid and/or 28" bumper extension with reel trays. | 218 |
| 1150-0149 | Nylon black cargo net on sides for bumper crosslay. | 247 |
| 1150-0150 | Double crosslay on top of the front bumper gravel shield. Tray to be "U" shape approx 20" wide x 7.5" high x 90" wide minimum or as per application bumper width. Holds 200' of 1.75" DJ (each). Includes tri-fold diamond plate cover hinged at the front. Requires seperate side cover option and 28" extension. | 1605 |
| 1150-0154 | Bumper tray center of bumper with slats located to rear of Q2B. Tray to be approx 34"W x 9"L x 10" deep (9" to slats). | 740 |

| Item No. | Description | |
|---|---|---|
| 1150-0155 | Tray officer side bumper outboard for hydraulic/cord reel. | 822 |
| 1150-0156 | Tray driver side bumper outboard for hydraulic/cord reel. | 822 |
| 1150-0157 | Diamond plate raised full lid for extended front bumper. 6" high with dual chrome grab hands rubber hood latches and gas shocks. | 793 |
| 1150-0159 | Bumper tray center of bumper with slats 16 inches deep (approx 15 inches to slats). | 510 |
| 1150-0161 | Double crosslay on top of the front bumper gravel shield. Tray to be "U" shape to hold 200' of 1.75" DJ (each). Includes bi-fold diamond plate cover hinged at the rear. Requires separate side cover option and 28" extension. | 1605 |
| 1150-0164 | Bumper tray center of bumper with black Turtle Tile 14" deep (approx. 13.25" from tile). Includes: hinged diamond plate lid for center bumper tray with Tri-Mark latch gas shock hold open and door ajar switch. | 1053 |
| 1150-0168 | Bumper tray center of bumper without slats 10 inches deep. | 437 |
| 1150-0169 | Bumper tray center of bumper without slats 12 inches deep. | 437 |
| 1150-0170 | Bumper tray center of bumper without slats 14 inches deep. | 437 |
| 1150-0177 | Notch front bumper tray for speaker/Q2B. Will reduce front hose/equipment load. Driver's side only. | 138 |
| 1150-0179 | Bumper tray center of bumper without slats 16 inches deep. | 437 |
| 1150-0181 | Nylon black strap with aluminum quick release buckle for front bumper hose tray. Strap to attach to side walls of tray down low as applicable. Location: [#LOC]. | 128 |
| 1150-0184 | Vinyl [#COL] side covers for diamond plate bumper crosslay cover. | 209 |
| 1150-0187 | Nylon yellow strap with aluminium quick release buckle for front bumper hose tray. Strap to attach to front and rear walls of tray down low as applicable. Location: [#LOC]. | 128 |
| 1150-0193 | Bumper tray center of bumper with black turtle tile 16 inches deep (approx 15 inches to tiles). | 510 |
| 1150-0194 | Dri-Deck will be added to the center bumper tray. Color will be black. | 93 |
| 1150-0195 | Bumper tray center of bumper with black Turtle Tile 14" deep (approx. 13.25" from tile). | 510 |
| 1150-0197 | Nylon black strap with aluminum quick release buckle. Location: driver officer and center top of front bumper gravel shield. | 380 |
| 1150-0198 | Notch front bumper tray for speaker/Q2B. Will reduce front hose/equipment load. Officer's side only. | 138 |
| 1150-0199 | Nylon black cargo net with bungee hold downs on sides for bumper crosslay. | 306 |
| 1150-0200 | Bumper tray center of bumper with slats 18 inches deep (approx 17 inches to slats). | 510 |
| 1150-0201 | Notch front bumper tray for speaker/Q2B. Notch to be sized as close to obstacle as possible to provide more storage space in tray. Will reduce front hose/equipment load. Center only. | 138 |
| 1150-0202 | Bumper tray center of bumper with slats 12 inches deep (approx 11 inches to slats). The bumper tray shall be raised 2" above the gravel shield (12" total depth). The bumper tray shall be approximately 17" front to rear X 30" in length side to side. A divider shall be centered (spanning from front to back) making a left hand and right hand center bumper tray. | 510 |
| 1150-0207 | Hinged diamond plate lid for center bumper tray. Includes 1/4 turn latch and moon spring hold open. | 340 |
| 1150-0211 | Bumper tray center of bumper with slats 16 inches deep (approx 15 inches to slats). Mount tray 1" above gravel shield. Forward bottom edge has 45 degree cut to improve approach angle. Forward cut height begins at approximate tray depth as it aligns with bumper bottom continuing rearward at a 45 degree angle. | 731 |
| 1150-0212 | Nylon black strap with clip release on officer side front bumper tray running front to back. | 156 |
| 1150-0213 | Bumper tray center of bumper (w/o slats) 10 inches deep. | 510 |
| 1150-0214 | Traffic cone storage on front bumper extension. Cones to be oriented downard through a 7 3/4" hole in the gravelshield. Includes nylon strap with aluminum buckle. Location: [#LOC]. | 422 |
| 1150-0215 | Hinged diamond plate lid for center bumper tray. Includes 1/4 turn latch and two (2) gas shock hold open. | 372 |
| 1150-0216 | Bumper tray lid(s) to be constucted using 3/16" aluminum ipos. | 163 |
| 1150-0219 | Additional gas shock on front bumper tray lid. Location: [#LOC]. | 175 |
| 1150-0223 | Bumper tray officer's side with slats 16 inches deep (approx 15 inches to slats). | 510 |
| 1150-0225 | The rear wall of bumper tray to have louvers for additional ventilation. Location: [#LOC]. | 200 |
| 1150-0227 | Bumper tray center of bumper with slats 18 inches deep (approx 17 inches to slats). | 437 |
| 1150-0228 | Bumper tray driver's side of bumper with black Turtle Tile 14" deep (approx. 13.25" from tile). | 510 |
| 1150-0230 | Bumper trough full length mounted on top of gravel shield. Trough shall run side to side 4" high 7" wide made from 3/16" smooth plate aluminum. | 273 |
| 1150-0231 | Nylon black strap with aluminum quick release buckle for front bumper hose tray. Strap to attach to front and rear walls of tray as high as possible. Location: [#LOC]. | 128 |
| 1150-0232 | Hinged diamond plate lid for center bumper tray. Includes Tri-Mark latch and gas shock hold open. | 455 |
| 1150-0233 | Hinged smooth plate lid for driver side bumper tray. Includes D-Ring latch and gas shock hold open. Lid to painted with black Scorpion brand coating inside and outside surfaces (smooth finish). | 449 |

| Item No. | Description | |
|---|---|---|
| 1150-0236 | Recessed bumper double crosslay to hold of 200' of 1.75" DJ hose in each crosslay. The crosslay floor/bottom shall be slotted to allow drainage (no slats). Includes hinged bi-fold raised lid in center with outboard fixed panels for optional equipment and stainless steel scuff guards at each side of crosslay opening across bottom and sides. Requires 28" extension side covers 12" heavy duty bumper and engineering approval. | 4158 |
| 1150-0239 | Bumper trays shall have 1/2" drain holes IPOS. | 30 |
| 1150-0241 | Bumper tray center of bumper with slats 14 inches deep (approx 13 inches to slats) fabricated from smooth plate aluminum. Outside facing surface of tray below bumper shall be painted black Durabak. | 610 |
| 1150-0247 | Hinged diamond plate lid raised 3" high for center bumper tray. Includes a single chrome grab handle SS butterfly latches and gas shocks. | 415 |
| 1150-0250 | Single crosslay on top of the front bumper gravel shield. Tray to be "U" shape approx 10" wide x 7.5" high x 90" wide. Holds 200' of 1.75" DJ (each). Includes diamond plate cover hinged at the front. Requires seperate side cover and 24" extension. | 1258 |
| 1150-0253 | Black nylon cargo net on driver side front bumper tray. | 334 |
| 1150-0255 | Hinged smooth plate lid for driver side bumper tray. Includes D-Ring latch and gas shock hold open. Smooth plate lid will be painted with black Durabak. | 429 |
| 1150-0256 | Bumper tray(s) to be constructed using smooth plate aluminum with exterior surface painted black Durabak. | 204 |
| 1150-0257 | Recessed bumper double crosslay to hold of 200' of 1.75" DJ hose with pistol grip (raise lid an additional 1") in each crosslay. The crosslay floor/bottom shall be slotted to allow drainage (no slats). Includes hinged bi-fold raised lid in center with outboard fixed panels for optional equipment and polished stainless steel scuff guards at each side of crosslay opening across bottom and sides. Requires 28" extension side covers 12" heavy duty bumper and engineering approval. | 4158 |
| 1150-0258 | Recessed bumper double crosslay to hold of 200' of 1.75" DJ hose in each crosslay. The crosslay floor/bottom shall be slotted to allow drainage (no slats). Includes hinged bi-fold raised lid in center with outboard fixed panels for optional equipment and stainless steel rollers at each side of crosslay opening across bottom and sides. Requires 28" extension side covers 12" heavy duty bumper and engineering approval. | 4325 |
| 1150-0259 | Bumper tray full width of bumper (approx. 85") without slats 6" inches deep. | 950 |
| 1150-0260 | Recessed bumper double crosslay to hold of 200' of 1.75" DJ hose in each crosslay. The crosslay floor/bottom shall be slotted to allow drainage (no slats). Includes full width hinged bi-fold raised lid and stainless steel scuff guards at each side of crosslay opening across bottom and sides. Requires 28" extension side covers 12" heavy duty bumper and engineering approval. | 4607 |
| 1150-0263 | Recessed bumper crosslay to hold of 150' of 1.75" DJ hose. The crosslay floor/bottom shall be slotted to allow drainage (no slats). Includes full width flat lid. Requires 20" extension side covers and 10" heavy duty bumper. | 3844 |
| 1150-0264 | Recessed bumper double crosslay to hold 200' of 1.75" DJ hose in each crosslay with a nozzle as applicable. The crosslay floor/bottom shall be slotted to allow drainage (no slats). Includes hinged bi-fold full width raised lid for open full access to crosslays when open and stainless steel scuff guards at each side of crosslay opening across bottom and sides. Requires 28" extension side covers 12" heavy duty bumper and engineering approval. Lid shall be raised approx 5.25" above top of bumper for capacity to ensure ease of use with a nozzle. Lid to be secured in closed position with S/S Butterfly latches. Capacity may be affected and may require a compact nozzle depending on hose selection as loaded. | 4383 |
| 1150-0269 | Bumper tray to be constucted using 3/16" aluminum ipos. | 113 |
| 1150-0272 | Raised lid over bumper tray to be extended over jumpline swivel on top of gravel shield. For use with 2" swivel only. | 66 |
| 1150-0273 | Nylon black cargo net with black powder coated quick release buckles on sides for bumper crosslay. | 359 |
| 1150-0275 | Hinged smooth plate lid for center bumper tray. Includes 1/4 turn latch and gas shock hold open. Smooth plate lid will be painted black Durabak. | 424 |
| 1150-0276 | Nylon black strap with aluminum quick-release buckle. Location: driver officer and (2) center top of front bumper gravel shield. | 510 |
| 1150-0280 | Bumper tray center of bumper with slats 17 inches deep (approx 16 inches to slats). Mount tray 1" above gravel shield. Exterior of tray to be painted FLNA4145 Black. | 981 |
| 1150-0281 | Hinged diamond plate lid for driver side bumper tray. Includes D-Ring latch and moon spring hold open. | 370 |
| 1150-0283 | Hinged diamond plate lid for center and officer bumper tray. Includes (2) D-Ring latches (2) gas shock hold open and smooth plate spacer between bumper trays. | 707 |
| 1150-0284 | Nylon black strap with aluminum quick release buckle. Location: driver officer and center top of front bumper gravel shield. Mount at final inspection. | 380 |
| 1150-0286 | Shallow bumper tray located center of the bumper without slats. Tray to be as wide and as deep as possible while maintaining a flat floor without notches or protrusions. | 347 |

| Item No. | Description | |
|---|---|---|
| 1150-0287 | Hinged diamond plate lid for officer side bumper tray. Includes D-Ring latch and moon spring hold open. | 370 |
| 1150-0288 | Seconday bumper tray located towards the rear beneath first center tray for additional storage. Tray to be as long front to back as possible while maintaining a flat floor without notches or protrusions and still have the seconday lid removable. Tray to be as wide as applicable and as deep as other trays on the truck. | 455 |
| 1150-0290 | All fabricated aluminum sheet metal parts installed on the bumper shall be made using smooth plate in place of standard. Includes gravel shield tray(s) lid(s) and other miscellanous parts. | 204 |
| 1150-0293 | Bumper tray driver side of bumper made as large as possible with slats 14 inches deep (approx 13 inches to slats). Mount tray 1" above gravel shield. | 722 |
| 1150-0294 | Insulation on exterior of the bumper tray assembly. Location: Driver side. | 265 |
| 1150-0296 | Hinged diamond plate lid for officer bumper tray. Includes Tri-Mark latch and gas shock hold open. | 455 |
| 1150-0297 | Bumper tray driver side of bumper made as large as possible without slats 14 inches deep. Mount tray 1" above gravel shield. | 722 |
| 1150-0298 | Bumper tray center of bumper without slats 14 inches deep. Mount tray 1" above gravel shield. | 609 |
| 1150-0300 | Bumper tray driver's side with slats 16 inches deep (approx 15 inches to slats). | 510 |
| 1150-0303 | Nylon black strap with aluminum quick release buckle for front bumper hose tray. Strap to attach to front and rear top of tray. Location: [#LOC]. | 128 |
| 1155-0000 | Class III hitch for portable winch for the front. | 979 |
| 1155-0002 | Winch electric front mounted Ramsey 12000 lb. Includes access door with quarter turn latch and spring hold open device. | 4565 |
| 1155-0005 | Winch Warn Series 12 12000 lb. with 125' 3/8" plated cable. Includes access door with quarter turn latch and spring hold open device. Locate: Mounted to the chassis frame extension centered at the front bumper area. | 5741 |
| 1155-0013 | Winch Warn Series 12 12000 lb. with 125' 3/8" plated cable. Includes access door hinged rearward that is smooth plate alum (IPO tread) and painted with black Scorpion brand coating inside and outside surfaces (smooth finish). Latch to be D-Ring style (IPO std. 1/4 turn latch). Lid to have 1 gas shock. | 5884 |
| 1155-0016 | 20000lb Hydraulically Driven Winch. Ramsey Model H800R (Mfg.Part# 124410) Hydraulic Winch with Dow-Lok Clutch roller guide assembly minimum 200' of 5/8" Wire Rope Assembly Winch Mounting Brackets PTO and Hydraulic Pump. Maudlin to supply and install winch E-One to complete installation. | 15039 |
| 1155-0018 | Winch Warn Series 12-S Spydura Pro 12000 lb. with 100' of 7/16" synthetic rope and Hawse fairlead. Includes access door with quarter turn latch and spring hold open device. | 6416 |
| 1155-0019 | Winch Warn Series 12 12000 lb. Includes 100' 7/16" Spydura Pro synthetic rope fairlead & 32' remote. Locate: Mounted to the chassis frame extension centered at the front bumper area. A service access to the winch shall be provided. | 6173 |
| 1160-0002 | Bumper reinforcement backing. For use with 10" SS or heavy duty bumpers only. | 507 |
| 1160-0004 | Stainless Steel 10" high front bumper. Requires extended front bumper. | 1427 |
| 1160-0008 | 3/16" Front Bumper Gravel Shield. | 146 |
| 1160-0012 | 12" Front Bumper Gravel Shield Extension. | 162 |
| 1160-0013 | 16" Front Bumper Gravel Shield Extension. | 309 |
| 1160-0014 | 20" Front Bumper Gravel Shield Extension. | 548 |
| 1160-0015 | 24" Front Bumper Gravel Shield Extension. | 726 |
| 1160-0016 | 28" Front Bumper Gravel Shield Extension. | 877 |
| 1160-0020 | License plate holder mounted center of front bumper. | 45 |
| 1160-0034 | 8" Front Bumper Extension. | 162 |
| 1160-0051 | 3/16" Front Bumper Gravel Shield. Smooth plate painted with black Durabak. | 1503 |
| 1160-0053 | 14" Front Bumper Gravel Shield Extension. | 236 |
| 1160-0055 | Guard straps for bumper mtd recessed Q2B - polished stainless steel. | 342 |
| 1160-0068 | 1/8" Front Bumper Gravel Shield. Smooth plate painted with black Durabak. | 1503 |
| 1160-0082 | Front bumper extension. For use with International 7000 Series 4x4 chassis. Total extension to be 20" including the OEM frame extension. | 548 |
| 1160-0088 | Removable number plate with mounting brackets. Locate [#LOC]. Plate to be painted job color. Plate to be 12"W x 8"H. Lettering and/or graphics not included. | 294 |
| 1160-0094 | 18" Front Bumper Gravel Shield Extension. | 429 |
| 1160-0105 | Removable number plate with mounting brackets. Locate [#LOC]. Plate to be painted lower job color (if cab is painted two tone). Plate to be 14"W x 8"H. Lettering and/or graphics not included. | 322 |
| 1160-0108 | 3/16" Front Bumper Gravel Shield. Smooth plate painted with black Scorpion coating. | 1503 |
| 1160-0120 | 1/8" Front Bumper Gravel Shield. Includes 1" return break on each side of heavy duty bumper. | 177 |
| 1160-0121 | Diamond plate lower gravelshield. Located under side of the front bumper extension. | 855 |
| 1160-0122 | 20" Front Bumper Gravel Shield Extension. The extension shall extend further forward and each side to align with the edge of the bumper. | 628 |
| 1160-0129 | License plate holder hinge mounted below center of front bumper. | 88 |

| Item No. | Description | |
|---|---|---|
| 1160-0131 | 1/8" Front Bumper Gravel Shield for heavy duty bumper. Includes 1" turn down around perimeter of HD bumper. | 239 |
| 1160-0132 | Notch front bumper for low "S" type front intake. Tray below pipe extending from cab to bumper. Tray to hold 15' of 5" LDH. Include nylon strap (seat belt type) for tray. | 2148 |
| 1160-0134 | 28" Front Bumper Gravel Shield Extension for recessed crosslay to be used on commercials only. | 3126 |
| 1160-0138 | 3/16" Front Bumper Gravel Shield. Extend shield to flush with heavy duty bumper edge. | 595 |
| 1160-0139 | 20" Front Bumper Gravel Shield Extension for recessed crosslay to be used on commercials only. | 2797 |
| 1160-0140 | 3/16" Front Bumper Gravel Shield for heavy duty bumper. Includes 1" turn down around perimeter of HD bumper. | 383 |
| 1160-0141 | 3/16" Front Bumper Gravel Shield with 1" turn down lips to protect the top edge of the heavy duty bumper from damage. Smooth plate painted with black Durabak. | 1559 |
| 1160-0145 | Notch front bumper for low "S" type front intake. 10" deep tray below pipe extending from cab to bumper to hold at minimum 25' of 5" LDH. Include nylon strap (seat belt type) for tray. | 2148 |
| 1160-0149 | LINE-X bumper package: Includes all visible diamond plate surfaces including gravel shield exterior surface of trays and lids(flat or raised). If equipped exterior of the fabricated booster reel housing fabricated box for booster reel rollers and winch access door shall be included in this package. | 1008 |
| 1160-0155 | LINE-X bumper: The bottom lip of the bumper shall have LINE-X finish. | 234 |
| 1160-0156 | Durabak Black bumper package: Includes all visible plate surfaces including gravel shield exterior surface of trays and lids(flat or raised). If equipped exterior of the fabricated booster reel housing fabricated box for booster reel rollers and winch access door shall be included in this package. | 1008 |
| 1160-0159 | 30" Front Bumper Gravel Shield Extension. | 1052 |
| 1160-0164 | Heavy duty inner city front bumper 10" high with full angle corners. Includes support wings for angled corners. Center of bumper to have a 5" deep notch for recessed Q2B. Bumper to be painted job color. | 3434 |
| 1160-0166 | 26" Front Bumper Gravel Shield Extension. | 801 |
| 1160-0170 | 3/16" Front Bumper Gravel Shield with 1" turn down lip. Smooth plate painted with LINE-X. | 1391 |
| 1200-0182 | International Maxx Force 9 330 HP engine. | 217 |
| 1200-0287 | Freightliner Cummins ISL 300 HP engine in place of ISB engine. | 1594 |
| 1225-0012 | Ward No Smoke Exhaust System. | 19461 |
| 1225-0030 | Exhaust driver side terminating between L3/L4 | 690 |
| 1225-0034 | Exhaust officer side terminating rearward of R1 door below the 1.5" X 3" extrusion. | 690 |
| 1225-0054 | Locate exhaust end 3" below rubrail extending 2" past rubrail. | 268 |
| 1225-0057 | Nederman exhaust transmitter on cab dash. Wired through engine run. | 1195 |
| 1225-0059 | Ward No Smoke 2 Exhaust System. | 19461 |
| 1250-0011 | Rear underbody support frame. | 652 |
| 1250-0074 | Rear underbody support frame with side tow eye style frame brackets without lower tow eyes to minimize impact on departure angle. To be used with frame mounted tow eyes facing rearward from frame rails. | 1113 |
| 1250-0076 | Rear underbody support frame. Includes zinc plated (galvanized) IPOS. | 1546 |
| 1350-0000 | Electric reprime diesel fuel pump. Not available on E-One custom chassis. | 806 |
| 1350-0002 | Recessed fuel fill | 148 |
| 1350-0010 | Fuel pick-up for generator or pump. Includes hoses run to generator compartment. | 154 |
| 1350-0016 | Fuel Fill Package. Required on chassis with approved factory tank. | 411 |
| 1350-0058 | Radiator mounted fuel cooler. | 540 |
| 1400-0011 | Battery splash cover for ULC compliance. | 340 |
| 1400-0022 | Battery Rollout Tray in Commercial Chassis in Deluxe Trim Package. | 769 |
| 1400-0037 | Battery rollout tray in body compartment R1. | 769 |
| 1510-0035 | Universal air pack bottle bracket (EA). Location: [#LOC]. | 171 |
| 1510-0091 | Zico Quic-Hold mechanical air pack bottle bracket (EA). Model QLM-U with adjustable footplate and pull release. Location: [#LOC]. | 748 |
| 1510-0151 | Universal air pack bottle bracket installed (EA). | 171 |
| 1510-0203 | Bracket SCBA IMMI SmartDock Gen2 restraint system. Location: [#LOC]. | 553 |
| 1510-0227 | Zico Quic-Hold mechanical air pack bottle bracket (EA). Model QM-ROLO-SA with adjustable footplate and pull release. | 550 |
| 1510-0258 | Zico EZ-LOC mechanical air pack bottle bracket (EA). Model QM-EZL with adjustable top clamp and footplate with center pull release for Bostrom seat. Location: [#LOC]. | 658 |
| 1510-0317 | Zico EZ-LOC mechanical air pack bottle bracket (EA). Model QM-EZL-CPR with adjustable top clamp and adjustable footplate with center pull release for 911 seats. Location: [#LOC]. | 743 |
| 1510-0346 | Zico model ULLH-EZO air pack bottle bracket (EA). Location: [#LOC]. | 339 |
| 1515-0056 | Roof mtd A/C system Coleman Mach 8 15000 BTU. Locate on rear cab roof wired to shore power and (if equipped w/auto transfer) generator. | 3513 |
| 1535-0035 | Engine compartment light LED (EA). | 268 |
| 1535-0039 | Medical cabinet. Locate center on rear wall (20" wide x 24" deep x 52" high). Includes (3) adjustable shelves and (1) vertically mounted incandescent light. | 3120 |

| Item No. | Description | |
|---|---|---|
| 1535-0040 | Medical cabinet. Locate center on rear wall (20" wide x 21" deep x 52" high). Includes (3) adjustable shelves and (1) vertically mounted incandescent light. | 2986 |
| 1535-0113 | (2) Cabinets rear of commercial extended cab. Sized in height width and depth as space within cab permits while allowing for installation requirements for a commercial chassis. Each cabinet to include (1) LED strip light mounted as applicable. Cabinets to be bolt-in and have zolatone grey interior and exterior finish. | 3757 |
| 1535-0138 | Lock box mounted in the driver side wheel well medical cabinet floor. 14X21X20 with a locking horizontally hinged door. Finish will match interior of cab. | 671 |
| 1535-0143 | Lock box mounted on top of the rear wall medical cabinet. 14HX18WX12D with a locking horizontally hinged drop down door. Finish will match interior of cab. | 671 |
| 1535-0224 | Lock box mounted in the driver side wheel well medical cabinet floor. 8X21X20 with a locking horizontally hinged door. Finish will match interior of cab. | 671 |
| 1535-0230 | Lock box in rear wall medical cabinet; floor mounted. 12H X FW X 12D with a locking horizontally hinged drop down door. Finish will match interior of cab. | 671 |
| 1535-0246 | Medical cabinet. Locate center on rear wall (20" wide x 24" deep x 52" high) with a locking roll-up door. Includes (3) adjustable shelves. | 3120 |
| 1535-0254 | Rubber floor matting on interior of all medical cabinet floors. | 225 |
| 1535-0273 | Compartment dividers with rubber floor matting on interior of vista cabinet floor. | 281 |
| 1535-0299 | Medical cabinet mounted on the wheel well driver side of cab 26H x 21W x 24D with an interior hinged full height door with locking d-ring. | 2371 |
| 1535-0300 | Medical cabinet mounted on the wheel well officer side of cab 26H x 21W x 24D with an interior hinged full height door with locking d-ring. | 2371 |
| 1535-0302 | Medical cabinet mounted on the wheel well officer side of cab 32H x 21W x 24D with a interior full height opening and cargo net restraint. | 2423 |
| 1535-0341 | Cabinet mounted on the wheel well driver side of cab 26H x 21W x 24D with an interior full height cargo net cover. | 2371 |
| 1535-0342 | Cabinet mounted on the wheel well officer side of cab 26H x 21W x 24D with an interior full height cargo net cover. | 2371 |
| 1535-0352 | Medical cabinet mounted on the wheel well driver side of cab 26H x 21W x 24D with interior cargo netting and (2) adj shelves. | 2528 |
| 1540-0002 | Center console with map storage box. | 1503 |
| 1540-0043 | Floor Mounted Map Box Between Driver and Officer Seats of Commercial Chassis. | 2655 |
| 1540-0044 | Map Box with Large  Storage Area and Cargo Net Cover. | 1503 |
| 1540-0061 | Map storage box constructed of 3/16" aluminum. | 1624 |
| 1540-0074 | Map storage box constructed of 1/8" aluminum. Map Box will include forward area for switching center area will have an area to mount sirens radios and other miscellanous items. Rear of this area will be a hinged door area for maps. | 1624 |
| 1540-0101 | The center console shall have an adjustable track mounted to the front of the console for joystick control mounting bracket. | 213 |
| 1550-0138 | Door mounted Whelen M2 red super LED flashing lights (4). Locate lights on each cab door in the outboard position. Each individual light shall be activated by the corresponding cab door ajar circuit. | 1250 |
| 1550-0173 | Stainless steel trim on bottom edge of the over wheel cab compartment opening (ea). Vertical trim edge to be 3" tall. | 140 |
| 1550-0176 | Door mounted Whelen 3SR00FRR red super LED flashing lights (4). Locate lights [#LOC]. Each individual light shall be activated by the corresponding cab door ajar circuit. | 809 |
| 1640-0017 | Diamond plate trim package for a (2) door extended International 7500.  Includes driver side and an officer side trim and stepping areas that will utilize pieces already supplied by the OEM. The rearward area below the extended cab will be formed diamond plate with support framing. | 2618 |
| 1675-0008 | Step chassis off road type pair.  Required on all medium duty 4x4 chassis for each cab door. | 485 |
| 1675-0015 | Cab roof mounted diamond plate 3 sided light tower shield with 45 degree front slope. | 1058 |
| 1675-0016 | Cab roof mounted painted job color 3 sided light tower shield with 45 degree front slope. | 1318 |
| 1675-0033 | Chrome fire bell with eagle. Location: Officer's side of front bumper extension. | 1547 |
| 1675-0052 | Relocate commerical chassis batteries location [#LOC]. | 891 |
| 1675-0058 | Chrome fire bell with gold eagle. Location: Officer's side of front bumper extension. | 1630 |
| 1675-0073 | Hose deflector pin to protect Q2B on front bumper extension. | 232 |
| 1675-0140 | Cab roof mounted diamond plate 3 sided AC shield with 45 degree front slope. | 822 |
| 1675-0149 | The battery charger receptacle mounting plate shall be fabricated using 3/16" aluminum smooth plate. It shall be painted to match cab two tone job colors and align with the paint break as mounted. | 156 |
| 1675-0154 | The cab shall have trim plates made from diamond plate to overlay the existing commercial cab closeout panels below the doors left and right. | 436 |
| 1675-0157 | The exterior lower rear of the commercial cab to have a diamond plate overlay. For use with a top mount application. | 185 |
| 1675-0164 | Cab roof mounted painted job color 3 sided light tower shield with 45 degree front slope to match the height of the light tower in the bedded position (+1" -0"). | 1436 |

| Item No. | Description | |
|---|---|---|
| 1675-0166 | Cab roof mounted painted job color 3 sided light tower shield with 45 degree front slope. Located rearward on flat roof (non vista). Placement to allow 45 degree shield to be placed in normal vista rise location to allow cab to appear to have vista roof. | 1432 |
| 1675-0169 | Door single vertically hinged painted with Tri-Mark latch. Location(s): driver side canopy area of cab. | 1030 |
| 1675-0184 | Chrome fire bell with eagle. Location: Officer's side front cab corner. | 1663 |
| 1675-0189 | Door single vertically hinged painted with Tri-Mark latch. Location(s): officer side canopy area of cab. | 1030 |
| 1675-0205 | Drip pan for a ROM roll-up door (EA). Location(s): driver and officer side ALS door. | 187 |
| 1675-0220 | Chrome fire bell. Location: Officer's side of front bumper extension. | 1547 |
| 1675-0232 | Customer supplied electric fire bell for dealer installation. Includes: bracing under extended front bumper extension (as applicable) and switch in officer side overhead panel. Location: Officer's side of front bumper extension. | 478 |
| 1675-0238 | DEF Tank Inside Cab Door label to be mounted on the exterior of the driver side rear cab door. | 45 |
| 1680-0008 | Tow eyes front painted below bumper/cab (PR). | 297 |
| 1680-0009 | Tow eyes front stainless steel below bumper / cab (PR). | 746 |
| 1680-0010 | Tow eyes front stainless steel mounted in up position. Requires 16" minimum bumper extension on custom chassis and 18" minimum bumper extension on commercial chassis. | 746 |
| 1680-0011 | Tow eyes rear below body painted. | 684 |
| 1680-0012 | Tow eyes rear frame painted. | 608 |
| 1680-0013 | Tow hooks front stainless steel in down position. Requires extended bumper on commercial chassis. If Non-Extended bumper on Comm. Chassis tow hooks are to be ordered with chassis. | 891 |
| 1680-0014 | Tow hooks front stainless steel mounted up. Requires 12" minimum bumper extension on custom and commercial chassis. | 891 |
| 1680-0015 | Trailer hitch Class III mounted rear. | 1088 |
| 1680-0018 | Exhaust driver side light rescue | 690 |
| 1680-0042 | Tow hooks front painted in the down position. | 308 |
| 1680-0059 | DELUXE TRIM PKG 2DR INTNL | 2748 |
| 1680-0060 | Deluxe Trim Pkg 4DR Navistar. | 4806 |
| 1680-0061 | Deluxe Trim Pkg 4DR M2 (Obsolete - Use 1680-0298) | 4806 |
| 1680-0062 | Deluxe Trim Pkg 2DR M2 | 3473 |
| 1680-0063 | Diamond Plate Running Boards Ford. | 795 |
| 1680-0075 | (3) way rear underbody receiver assembly. Includes rearward 9000 lb. winch receiver or Class III trailer receiver and (2) side facing 9000 lb. winch receivers- (1) each below rearward body compartments. Includes rearward tow eyes and electrical winch connections for each receiver. | 2616 |
| 1680-0077 | Front bumper 9K winch receiver. Includes electrical connection for portable winch application. Commercial chassis only. | 2063 |
| 1680-0079 | Pressure Sensing Governor DDEC Engine - Required with Fire Commander | 1506 |
| 1680-0093 | Tow eyes front stainless steel with 3" holes mounted in up position. Requires 16 inminimum bumper extension on custom chassis and 18 in minimum bumper extension on commercial chassis. | 1005 |
| 1680-0094 | Trailer hitch Class IV mounted rear. | 1986 |
| 1680-0095 | Side underbody 9K winch receivers. Includes (2) side facing- (1) each below rearward body compartments for portable winch with electrical connection for winch. | 1744 |
| 1680-0096 | Side underbody 9K winch receivers. Includes (2) side facing- (1) each below body compartment ahead of the rear wheels for portable winch with electrical connection for winch. | 1744 |
| 1680-0104 | OEM chassis step package for Freightliner M2 series. Includes mounting plate for the battery charger receptacle and air inlet. | 164 |
| 1680-0106 | OEM chassis step package for International 4000 and 7000 series. Includes mounting plate for the battery charger receptacle and air inlet. | 173 |
| 1680-0107 | Diamond plate trim package for a (2) door International. Includes a full length driver side and an officer side trim that will utilize pieces already supplied by the OEM. | 1471 |
| 1680-0110 | Chassis Trim Package for a (2) door Freightliner series. | 1471 |
| 1680-0111 | Chassis Trim Package for a (4) door Freightliner. | 2939 |
| 1680-0114 | Diamond plate trim package for a (4) door International. Includes a full length driver side and a (2) piece officer side trim that will utilize pieces already supplied by the OEM. | 2939 |
| 1680-0121 | Under the body there shall be equipped with a pair of 12000 lb receiver assemblies each with a removable swivel hoist ring or can be used with a Class III trailer hitch. One each side of apparatus. The receivers shall be locate in front of rear axle. Final location will depend on Engineering and driveline. 12v not included. | 3817 |
| 1680-0122 | Tow eyes rear below body painted. Eyes to be on edge pointing to rear. | 684 |
| 1680-0144 | Trailer hitch class V mounted rear. This hitch has under body support as needed. | 2806 |
| 1680-0150 | International 7400 Model Year and 2010 EPA Engine Surcharge. | 7481 |
| 1680-0151 | International 7600 Model Year and 2010 EPA Engine Surcharge. | 9581 |
| 1680-0162 | Diamond plate running boards with Gator Grip for 2 door F550 Ford chassis. | 623 |
| 1680-0184 | Existing chassis to be modified to match wheelbase and frame cut of order configuration. | 1155 |

| Item No. | Description | |
|---|---|---|
| 1680-0189 | Tow eyes front painted mounted in up position. Requires 16" minimum bumper extension on custom chassis and 18" minimum bumper extension on commercial chassis. | 297 |
| 1680-0192 | Forward facing under front bumper winch receiver. Includes lowered height for center bumper mounted tray depth and electrical connection for portable winch application. Commercial chassis only. | 2057 |
| 1680-0193 | Tow eyes rear below body stainless steel. | 2260 |
| 1680-0194 | Tow eyes front stainless steel through bumper / cab (PR). | 1032 |
| 1680-0196 | Tow eyes front painted through bumper / cab (PR). | 580 |
| 1680-0200 | Diamond plate trim package for a (2) door International with driver's side fuel tank and Officer's side battery storage. Includes a full length driver side and an officer side trim that will utilize pieces already supplied by the OEM. | 1471 |
| 1680-0219 | Diamond plate trim package for a (2) door International. Includes a driver side trim that will utilize pieces already supplied by the OEM and a full length officer side. | 1471 |
| 1680-0227 | Tow eyes front painted with 3" holes below bumper/cab (PR). | 746 |
| 1680-0231 | Insta-chain tire chain installation. Requires pre-wire option located in Cab Electrical. | 3124 |
| 1680-0237 | Deluxe Trim Package 2DR Extended Cab International. | 4505 |
| 1680-0239 | Tow eyes rear frame painted mounted low just above tailboard. | 608 |
| 1680-0244 | (2) way rear underbody Class III hitch receiver. Includes Class III trailer receivers (2) side facing- (1) each below rearward body compartments for portable winch receivers with electrical connection for winch. | 1749 |
| 1680-0247 | Trailer hitch Class III mounted rear optmized mounting to be in a raised mounting position. | 1088 |
| 1680-0252 | OEM chassis step package for Kenworth Commercial Chassis. Includes mounting plate for the battery charger receptacle and air inlet. | 173 |
| 1680-0254 | Officer side rear underbody Class III hitch receiver. Includes Class III trailer receiver (1) officer side facing side for portable winch receiver with an electrical connection for winch. | 1051 |
| 1680-0258 | Insta-chain tire chain installation. Includes 12 chain sytem. Requires pre-wire option located in Cab Electrical. | 3261 |
| 1680-0267 | Commercial chassis trim package upgrade to include smooth aluminum plate bolted in place on underside of gator grip over batteries. | 107 |
| 1680-0270 | Smooth plate trim package with black durabak finish for a (4) door International. Includes a full length driver side and a (2) piece officer side trim that will utilize pieces already supplied by the OEM will include modfication for booster reel(s). | 5938 |
| 1680-0271 | Tow eyes front painted through bumper / cab (PR). Eyes to be 1" thick material. | 580 |
| 1680-0272 | Plumb Vogel lube system to On-Spot tire chains. | 223 |
| 1680-0278 | Deluxe Trim Pkg 4DR Navistar with provision for booster reels. | 4806 |
| 1680-0280 | Diamond plate trim package for a (4) door International. Includes a full length driver and officer side trim package that will utilize pieces already supplied by the OEM. | 3051 |
| 1680-0282 | Tow eyes rear below body painted. 1" thick material with 3" diameter hole staight down from chassis frame. | 816 |
| 1680-0283 | Delux diamond plate trim package for (2) door International. Includes full length driver side and officer side trim. | 2447 |
| 1680-0287 | Tow eyes front painted bright silver through bumper / cab (PR). | 580 |
| 1680-0293 | Tow hooks front painted in the outboard position. | 308 |
| 1680-0295 | Trailer hitch Class I receiver mounted rear. | 665 |
| 1680-0297 | Diamond plate trim package for a (2) door International 7600. Includes a full length driver side and an officer side trim that will utilize pieces already supplied by the OEM. To be used with body mounted batteries. | 1471 |
| 1680-0298 | Deluxe Trim Package to be used with 4 door Freightliner M2 series chassis. | 4806 |
| 1680-0299 | Trim Package to be used with 4 door Freightliner M2 series chassis. | 2939 |
| 1680-0301 | Cord connector. Daniel Woodhead 3 wire NEMA 5-20 straight blade male located for block heater routed to driver side battery box. | 173 |
| 1680-0304 | Deluxe Trim Pkg 4DR Navistar with storage compartment on one side and provision for booster reel on the other side. | 4806 |
| 1680-0307 | 4-ply upper and lower radiator hose ipos. | 80 |
| 1680-0309 | Muncie digital tachometer. Locate display in cab visible to driver. | 763 |
| 1680-0314 | LINE-X package for 2 door commercial chassis: Includes chassis trim package all steps mounting plates for electrical components access doors for battery etc as applicable. | 663 |
| 1680-0315 | LINE-X package for 4 door commercial chassis: Includes chassis trim package all steps trim pack compartment doors mounting plates for electrical components access doors for battery etc as applicable. | 1351 |
| 1680-0322 | Diamond plate trim package for a (2) door International. Includes a full length driver side and an officer side trim that will utilize pieces already supplied by the OEM. For use with SCR and DEF. | 1471 |
| 1680-0323 | Diamond plate trim package for a (4) door International. Includes a full length driver side and officer side trim that will utilize pieces already supplied by the OEM. For International cabs with SCR and DEF. | 2939 |

| Item No. | Description | |
|---|---|---|
| 1680-0324 | Deluxe diamond plate trim package for a (4) door International. Includes a full length driver side and officer side trim plus additional storage area(s). For use with International cabs with SCR and DEF. Storage compartments shall be provided below the side rear cab doors and shall include a hinged door with push-button latch and shall include lighting and wired through the cab door ajar indicator per NFPA as space permits. | 4806 |
| 1680-0331 | Tow eyes front painted job color mounted in up position. Requires 16" minimum bumper extension on custom chassis and 18" minimum bumper extension on commercial chassis. | 443 |
| 1680-0336 | Special transmission lock bracket for manual transmission and electrical programming. | 757 |
| 1680-0337 | OEM chassis step package for commercial chassis. Includes mounting plate for air and electrical options. | 173 |
| 1680-0346 | Deluxe Trim Pkg 4DR Freightliner with provision for One (1) booster reel and One (1) compartment under rear cab doors as applicable per chassis configuration. | 4806 |
| 1680-0349 | Tow eyes rear below body painted. 1" thick material with 3" diameter hole staight down from chassis frame. For use as lifting eyes at rear of chassis. | 1937 |
| 1685-0009 | Chain for ignition key | 146 |
| 1685-0070 | Lanyard "Y" control. Chassis mounted air horn(s). Commercial chassis. | 184 |
| 1685-0073 | Control lanyard Y type or dual single pull as applicable for air horns on a commercial chassis. | 280 |
| 1685-0137 | Console Remote Control Panel between Driver and Officer for remote control Bumper Turret Pump Control and switchs. | 959 |
| 1685-0173 | Main control console for Ford chassis. Locate in cab centered between driver and officer. Includes all in-cab controls/switching. | 670 |
| 1685-0180 | On Scene Solutions Talon helmet holder (EA). Location: [#LOC]. | 447 |
| 1685-0189 | Identification plate GSA units. Located on inside of driver's door. Exact information and wording to be determined at time of final inspection. See specification. | 312 |
| 1685-0195 | Control lanyard to officer side and located over the officer side door opening with a single chain. For use with air horns. Commercial chassis only. | 280 |
| 1685-0235 | Foot switch Linemaster model 632S to control air horns located [#LOC]. Includes 25 degree diamond plate bracket. | 131 |
| 1685-0245 | Main control console for Ford chassis. Locate in cab centered between driver and officer. Includes all in-cab controls/switching. Console to have a Zolatone gray finish. | 670 |
| 1685-0254 | Storage box locking mounted on the rear lower engine cover. Engine cover lock box measures 18x24x9 with a lift top lid and a locking latch. Finish will match cab interior. | 952 |
| 1685-0264 | A universal laptop mount Havis model C-3090-3 shall be mounted to the center console. Ford commercial chassis. Requires 1685-0173 Ford center console. | 780 |
| 1685-0265 | Smooth plate cover(s) for battery charger and air compressor. These cover's shall be painted to match cab interior and shall include louvers as required for ventilation. | 250 |
| 1685-0289 | Foot switch Linemaster model 632S to control Q2B siren located [#LOC]. Includes 25 degree diamond plate bracket. | 131 |
| 1685-0313 | Smooth plate cover for battery charger. Includes louvers for ventilation. Cover to match cab interior. | 250 |
| 1685-0328 | Fold down computer tray bolted to the map box on officer's side. | 839 |
| 1685-0339 | Lower exterior cab steps to be equipped with Bustin Industries Type M stainless steel overlay in lieu of Gator Grip. Includes (6) 3/4" drain holes on the lower steps. | 1120 |
| 1685-0356 | Writing surface cab dash finished same as cab interior. Location: Mount at final inspection. | 232 |
| 1685-0363 | Locking seat riser door. Officer seat riser door is to include a Simplex model 9672C-20-260-41 combination lock with satin chrome finish and black trim ring. Not available with air or electric seats. | 406 |
| 1685-0371 | Overhead console flange re-inforcement. Includes driver and officer side consoles. | 118 |
| 1685-0372 | Map pocket rear cab console aluminum plate to match console finish. | 117 |
| 1685-0374 | Stack-On model PS-514-12 gun safe. Location: centered on top of rear wall medical cabinet. | 350 |
| 1685-0377 | Fixed back wall mounted swirled overlay. Overlay to be spaced off wall approx. half inch. Location(s): center rear wall of cab full height above seat support channel x engine cover width. | 296 |
| 1685-0385 | Fixed back wall mounted swirled overlay. Overlay to be spaced off wall approx. 0.5". Location(s): driver side rear wall of cab outboard of rear wall seats full height above seat support channel. | 296 |
| 1685-0397 | Manual cab tilt pump handle located adjacent to pump with cable tether. | 60 |
| 1685-0433 | Smooth plate cover for air compressor. Includes louvers for ventilation. Cover to match cab interior. | 250 |
| 1750-0019 | Battery charger Super Smart 110 volt 20 amp. | 462 |
| 1750-0021 | Battery charger Kussmaul model 1200 40 amp. | 776 |
| 1750-0022 | Battery charger Kussmaul 40 amp model 1200 with air compressor. | 2616 |
| 1750-0024 | Auto-Eject receptacle inlet 20 amp located [#LOC] with a [#COL] cover. | 631 |
| 1750-0026 | Clamshell controller mounted on officer's side of engine cover for the air horns. | 138 |
| 1750-0027 | Control push-button switch officer dash for Q2B siren. | 105 |
| 1750-0029 | Switch horn button two position DOT/air horn. | 110 |
| 1750-0030 | Switch horn button two position DOT/electronic siren. | 110 |
| 1750-0031 | Switch horn button two position DOT/Q2B. | 110 |
| 1750-0032 | Switch horn button three position DOT/air horn/electronic siren. | 223 |

| Item No. | Description | |
|---|---|---|
| 1750-0034 | Switch additional 12 volt/15 amp. Location and function: [#LOC]. | 223 |
| 1750-0040 | Battery charger Super Smart 220 volt 50 Hz 20 amp. | 462 |
| 1750-0042 | Horn button selector switch 3-position DOT/ES/Q2B. | 223 |
| 1750-0047 | The chassis shall be pre-wired for installation of tire chains. | 593 |
| 1750-0059 | Receptacle inlet 20 amp with a [#COL] cover. Location: [#LOC]. | 319 |
| 1750-0060 | Auto transfer switch 120 volt. Includes 8 place breaker box. Allows interior receptacles to be powered by either shore power or generator. | 838 |
| 1750-0061 | Control push-button switch officer dash for air horns. | 105 |
| 1750-0062 | Control push-button switch officer dash for siren. | 105 |
| 1750-0063 | Clamshell controller mounted on officer's side of engine cover for Q2B. | 138 |
| 1750-0064 | Clamshell controller mounted on on officer's side of engine cover for electronic siren. | 138 |
| 1750-0071 | Mount customer supplied antenna on cab roof. Location: [#LOC]. | 193 |
| 1750-0072 | 12 VDC (or 24VDC) electrical outlet in the cab wired battery hot. Location: [#LOC]. | 67 |
| 1750-0073 | Antenna base Tessco P/N 90942 (NMO Motorola Style - also called MATM style) on cab roof. Location: [#LOC]. | 104 |
| 1750-0082 | 12V power distribution module. Includes (6) battery hot and (6) switched hot circuits. 100 amps max (IATS). Location: [#LOC]. | 343 |
| 1750-0084 | Receptacle inlet 220 volt European "Schuko" style. Includes matching cord connector. Location: [#LOC] | 455 |
| 1750-0091 | Battery Saver Kussmaul model 091-195-12 wired to battery charger receptacle. | 767 |
| 1750-0094 | Battery charger / air compressor 220 volt Kussmaul Pump Plus HO. | 1647 |
| 1750-0113 | Dome Lts Red/White Incandescent. Package includes two lights mounted in the front of the cab. White light wire through door and light assembly mounted switch. Red light through light assembly mounted switch. | 310 |
| 1750-0114 | Cab Headlights in addition to front quad headlights | 474 |
| 1750-0115 | Master warning light switch to have a red cover (or bezel). | 43 |
| 1750-0117 | Auto eject receptacle inlet 15 amp 240 volt with a [#COL] cover. Location: [#LOC]. | 576 |
| 1750-0124 | Whelen 4" round LED red door ajar light. Model 20R00FCR light with 2FLANGEC bezel. | 207 |
| 1750-0131 | Pyrometer gauge in cab. | 630 |
| 1750-0132 | Auto transfer switch for additional battery charge receptacle. | 507 |
| 1750-0144 | Q2B brake switch to have a red cover (or bezel). | 43 |
| 1750-0149 | Control push-button switch on officer's dash for Q2B siren brake. | 105 |
| 1750-0158 | Dome Lts Red/White LED. Package includes two lights mounted in the front and two mounted in the rear of the cab. White light wired through door and light assembly switch. Red light through light assembly switch. | 891 |
| 1750-0160 | Dome Lts Red/White Incandescent. Package includes two lights mounted in the front and two mounted in the rear of the cab. Front cab lights: White light wired through door and light assembly mounted switch. Red light through light assembly mounted switch. Rear cab lights: White light wired through door and switch on side cab interior wall. Red light through switch on side cab interior wall. Rear dome switches to be located between side window and door opening and control light on respective side of cab. | 1056 |
| 1750-0162 | Battery charger Kussmaul model 091-35/10 35 amp battery charger / 10 amp battery saver. | 906 |
| 1750-0170 | Commercial 4x4 headlight wiring for headlights below in/below the bumper in addition to factory headlights. Wire factory hood headlights to three (3) position switch labeled "Off Road Lights". | 512 |
| 1750-0173 | Rocker switch cover (or bezel) to be red. Location: [#LOC]. | 43 |
| 1750-0183 | Wire Oil Pan Heater Provided by Commercial ChassisThrough Battery Charger Receptacle. | 219 |
| 1750-0185 | Vernier engine throttle in cab for use with jet dump operations. Locate in driver side overhead console or Lower Dash. Includes selector sw also in overhead console or Lower Dash. | 1002 |
| 1750-0186 | Dome Lts Red/White Incandescent additional. White light wire through door and light assembly mounted switch. Red light through light assembly mounted switch. Location: Centered rear of cab. | 159 |
| 1750-0190 | Dome Lts Red/White LED. Package includes two lights mounted in the front of the cab. White light wire through door and light assembly mounted switch. Red light through light assembly mounted switch. | 447 |
| 1750-0205 | Handheld flashlight orange Streamlight Vulcan flashlight with vehicle mount system. Location: [#LOC]. | 284 |
| 1750-0224 | Engine Compartment Light LED for Freightliner Chassis (EA). | 268 |
| 1750-0225 | Engine Compartment Light for Freightliner Chassis (EA). | 143 |
| 1750-0230 | Control Push Button Switch for Air Horns on Officers Side of Console. | 105 |
| 1750-0232 | Incandescent Red/White domes and upper NFPA step lighting. Package includes two lights mounted in the front and two mounted in the rear of the cab. White light wire through door and light assembly mounted switch. Red light through light assembly mounted switch. Upper cab step areas to have for NFPA incandescent step lighting. Step lighting to be positioned per OEM recommendations for best compliance to NFPA. | 709 |
| 1750-0252 | Kussmaul mounting plate model 091-9H for 12v air compressor. | 90 |
| 1750-0256 | Auto eject block heater receptacle inlet 15amp with a [#COL] cover. Location: [#LOC]. | 573 |

| Item No. | Description | |
|---|---|---|
| 1750-0262 | Auto transfer switch 120 volt. Includes 8 place breaker box. Allows interior receptacles to be powered by either shore power or generator. Ship to VanMor for installation. | 838 |
| 1750-0284 | Switch additional guarded toggle. Location and Function: [#LOC]. | 223 |
| 1750-0308 | Battery charging connector 12V Anderson with weatherproof cover. Includes mating connector (ship loose). Location: Driver's door step area. | 319 |
| 1750-0310 | Clamshell controller mounted on officer's side of engine cover for Federal Signal Rumbler. | 138 |
| 1750-0314 | Battery charger Kussmaul model 12 HO PIM 20 amp. Includes model 091-189-12 indicator located adjacent to inlet receptacle. | 1547 |
| 1750-0316 | Switch horn button two position DOT/Rumbler. | 110 |
| 1750-0320 | Conduit flexible .75" for radio installation distribution box to officer's overhead. | 333 |
| 1750-0325 | Pigtail minimum of 18" of wire for service of the battery charger and air compressor. | 54 |
| 1750-0326 | Auto transfer switch 120 volt. Includes 2 place breaker box. Allows interior receptacles to be powered by either shore power or generator. | 815 |
| 1750-0328 | Auto transfer switch 120 volt. Includes 8 place breaker box. Allows interior receptacles to be powered by either shore power or inverter. | 838 |
| 1750-0332 | Dome lights Red/White incandescent. Package includes two lights mounted in the front and two mounted in the rear of the cab Trucklite 80 series with push style on/off button (may be used with Ford chassis). White light wire through door and light assembly mounted switch. Red light through light assembly mounted switch. | 617 |
| 1750-0333 | Dome lights White incandescent. Package includes two lights mounted in the front and two mounted in the rear of the cab Trucklite 80 series with push style on/off button (may be used with Ford chassis). Lights wire through door and light assembly mounted switch. | 617 |
| 1750-0334 | Dome lights White incandescent. Package includes two lights mounted in the front of the cab Trucklite 80 series with push style on/off button (may be used with Ford chassis). Lights wire through door and light assembly mounted switch. | 309 |
| 1750-0336 | Whelen traffic advisor control head (model TRACTRL1A) shall be mounted in the center overhead panel. The control head shall be wired to the main power switching circuit. There shall be a 50' control cable (model TAPVC50) ran from the control head to the rear of the body coiled up for dealer supplied and installed traffic advisor. | 1109 |
| 1750-0337 | Garmin GSP 18X USB. May be mounted at E-ONE discretion on the cab roof within reach of cab 12VDC hot outlet(s). | 271 |
| 1750-0342 | Battery charger Kussmaul model 12 HO PIM 20 amp. Includes model 091-189-12 indicator located behind driver's door adjacent to exterior handrail. | 1547 |
| 1750-0343 | Battery charger E-ONE LPC 20. 120 volt inlet 20 amp output. | 665 |
| 1750-0344 | Battery charger E-ONE LPC 40. 120 volt inlet 40 amp output. | 1011 |
| 1750-0353 | Dome Lts Red/White LED. Package includes two lights mounted in the front and three mounted in the rear of the cab. White light wired through door and light assembly switch. Red light through light assembly switch. | 1136 |
| 1750-0355 | Each 110 volt cab receptacle shall have a dedicated breaker within the breaker box. This is to provide each cab mounted receptacle (single outlet duplex etc. as applicable) with its own isolated circuit. | 294 |
| 1750-0369 | Guard. On-Spot activation switch shall have a red flip up safety guard. The switch shall de located on the driver side overhead panel offset to the officer side as far as possible. | 57 |
| 1750-0372 | 12 VDC (or 24VDC) electrical outlet in the cab wired battery hot with 14AWG at each seated position. Outlets are shared within the same circuit. | 267 |
| 1750-0392 | Battery charger Kussmaul 75 amp model 091-149-12 with 091-9 air compressor. | 3873 |
| 1750-0394 | Control push button switch for Q2B on officers side of console. | 105 |
| 1750-0396 | Control push-button switch on officer's overhead for Q2B siren brake. | 105 |
| 1750-0399 | Control push-button switch driver side of center dash upper tier for Q2B siren. | 105 |
| 1750-0405 | Battery charger Kussmual model 091-200-12-194-WT-RD. 120 Volt 40 Amp output includes water tight display mounted adjacent to inlet. | 1938 |
| 1750-0406 | The air horn(s) shall not be included within the Multiplex system (separate switching from Multiplex display required). | 426 |
| 1750-0411 | Dome Lts Red/White Whelen model 60CREGCS LED. Package includes two lights mounted in the front and four mounted in the rear of the cab. White light wired through door and light assembly switch. Red light through light assembly switch. | 1835 |
| 1750-0412 | Kussmaul digital battery display model 091-194-IND-WT-RD in place of standard. | 379 |
| 1750-0414 | Warning light Whelen M6R series Linear Super LED (PR) red. Location: interior of canopy doors wired through each door ajar switch only. | 785 |
| 1750-0429 | Dual USB charging ports in the cab wired battery hot. Location: [#LOC]. | 77 |
| 1750-0433 | Battery charger Kussmaul LPC 80. 120 volt inlet 80 amp output. | 1855 |
| 1750-0439 | Dome Lt Red/White Whelen model 60CREGCS LED additional (EA). White light wired through door and light assembly switch. Red light through light assembly switch. Location: center rear crew cab ceiling. | 370 |
| 1750-0440 | Switch horn button three position DOT/air horn/electronic siren. Wired through multiplex display screen. | 223 |

| Item No. | Description | |
|---|---|---|
| 1750-0441 | Battery charger Kussmaul model EV40 40 amp. | 1684 |
| 1750-0443 | Dome Lts Red/White Whelen model 60CREGCS LED. Package includes two lights mounted in the front of the cab. White light wired through door and light assembly switch. Red light through light assembly switch. | 612 |
| 1750-0447 | Dome Lts Red/White Whelen model 60CREGCS LED. Package includes two lights mounted in the front and two mounted in the rear of the cab. White light wired through door and light assembly switch. Red light through light assembly switch. | 1224 |
| 1750-0453 | Auto transfer switch 120 volt. Includes 12 place breaker box. Allows interior receptacles to be powered by either shore power or generator. | 882 |
| 1750-0454 | Courtesy light for driver and officer located on front of risers wired through marker lights. Whelen model 0SR00SCR light. | 280 |
| 1750-0458 | Quad bezels (4) black ipos. | 281 |
| 1750-0464 | Dome Lt Red/White Whelen model 60CREGCS LED. One (1) light centered between driver/officer in the ceiling. White light wired through door and light assembly switch. Red light through light assembly switch. | 370 |
| 1750-0466 | DEF level gauge adjacent to tank fill area. | 384 |
| 1750-0471 | Auto-Eject receptacle inlet 20 amp located rear of body driver side with a Yellow cover. Receptacle wired to roof top A.C. | 631 |
| 1750-0475 | Control push-button switch center dash upper tier offset to officer for Q2B. | 105 |
| 1750-0477 | Clamshell controller mounted on officer's side of engine cover for Q2B brake. | 138 |
| 1750-0478 | Battery charger Kussmaul model 091-216-40/20 40 amp battery charger / 20 amp battery saver. | 2192 |
| 1750-0479 | On-Spot activation switch to have a red cover (or bezel). | 43 |
| 1750-0480 | Auto-Eject dual receptacle inlet; 30 amp 120V with air auto eject located [#LOC] with a [#COL] cover. | 1661 |
| 1750-0481 | Auto-Eject receptacle inlet 20 amp wired to roof top AC located [#LOC] with a [#COL] cover. | 631 |
| 1750-0482 | Control push-button switch officer switch panel for Q2B siren. | 105 |
| 1750-0483 | Control push-button switch on officer's switch panel for Q2B siren brake. | 105 |
| 1750-0484 | Control push-button switch officer switch panel for siren. | 105 |
| 1750-0485 | Control push-button switch officer switch panel for air horns. | 105 |
| 1750-0486 | Battery charger Kussmaul model Pump Plus 1200 40 amp. | 1577 |
| 1750-0490 | Lateral "G" Alert system with Audible and Visual warnings. | 4699 |
| 1750-0491 | The chassis shall be pre-wired for installation of tire chains. Includes 12 volt rocker lock-out/safety style switch. | 593 |
| 1750-0495 | Kussmaul bluetooth module model 091-226 wired to cab speakers. Located in cab accessible to driver. | 381 |
| 1750-0498 | Aerial PTO switch to have a red cover (or bezel). | 43 |
| 1750-0509 | Battery charger Iota model DLS-75 75 amp. | 833 |
| 1750-0513 | The commercial chassis shall be pre-wired for installation of tire chains. Installed by chassis OEM. | 593 |
| 1750-0517 | Cab headlights Sirius single low/hi beam located recessed behind bumper in addition to front cab mounted quad headlights. | 701 |
| 1750-0526 | Dome Lts Red/White Incandescent. Package includes two lights mounted in the front of the cab. White light wire through door and light assembly mounted switch. Red light through light assembly mounted switch. | 357 |
| **PUMPER BODY** | | |
| 3100-0000 | Driver side body with full height 24" wide forward and 36" wide rearward compartmentation. Includes (1) 56" wide compartment over the wheel well. | 9434 |
| 3100-0002 | Driver side body with full height 36" wide forward and 36" wide rearward compartmentation. Includes (1) 56" wide compartment over the wheel well. | 10812 |
| 3100-0003 | Driver side body with full height 42" wide forward and 42" wide rearward compartmentation. Includes (1) 56" wide compartment over the wheel well. | 11555 |
| 3100-0004 | Driver side body with full height 48" wide forward and 48" wide rearward compartmentation. Includes (1) 56" wide compartment over the wheel well. | 12362 |
| 3100-0015 | Driver side body with full height 36" wide forward and 50" wide rearward extended compartmentation. Includes (1) 56" wide compartment over the wheel well. | 11458 |
| 3100-0016 | Driver side body with full height 42" wide forward and 56" wide rearward extended compartmentation. Includes (1) 56" wide compartment over the wheel well. | 12215 |
| 3100-0020 | Driver side body with full height 36" wide forward and 50" wide rearward enhanced extended compartmentation. Includes (1) 56" wide compartment over the wheel well. | 11760 |
| 3100-0021 | Driver side body with full height 42" wide forward and 56" wide rearward enhanced extended compartmentation. Includes (1) 56" wide compartment over the wheel well. | 12518 |
| 3100-0022 | Driver side body with full height 48" wide forward and 62" wide rearward enhanced extended compartmentation. Includes (1) 56" wide compartment over the wheel well. | 13325 |
| 3100-0025 | Driver side body with full height 42" wide forward and 42" wide rearward compartmentation. Includes (1) 56" wide compartment over the wheel well. | 12362 |
| 3100-0026 | Driver side body with full height 48" wide forward and 48" wide rearward compartmentation. Includes (1) 56" wide compartment over the wheel well. | 13227 |

| Item No. | Description | |
|---|---|---|
| 3100-0052 | Officer half side body with 24" wide forward and 36" wide rearward compartmentation. Includes adjustable ladder tracks and 30 degree rear body angle for greater angle of departure. | 5083 |
| 3100-0053 | Officer half side body with 30" wide forward and 36" wide rearward compartmentation. Includes adjustable ladder tracks and 30 degree rear body angle for greater angle of departure. | 5083 |
| 3100-0060 | Stainless Steel officer half side body with 36" wide forward and 48" wide rearward compartmentation (interior). Includes adjustable ladder tracks. | 5943 |
| 3100-0075 | Driver side body with full height 36" wide rearward compartmentation. Includes (1) 56" wide compartment over the wheel well and 30 degree rear body angle for greater angle of departure. | 9181 |
| 3100-0079 | Driver side body with full height 54" wide forward and 60" wide rearward compartmentation. Includes (1) 56" wide compartment over the wheel well. The compartment behind the wheel well has upper area for RM pump panel mounting. | 19195 |
| 3100-0085 | Driver half side body with 24" wide forward and 36" wide rearward compartmentation. | 4718 |
| 3100-0089 | Driver half side body with 42" wide forward and 42" wide rearward compartmentation. | 5779 |
| 3100-0093 | Driver side body with full height 24" wide forward and 36" wide rearward compartmentation. Includes (1) 56" wide compartment over the wheel well. | 9434 |
| 3100-0094 | Driver side body with full height 30" wide forward and 36" wide rearward compartmentation. Includes (1) 56" wide compartment over the wheel well. | 10093 |
| 3100-0095 | Driver side body with full height 36" wide forward and 36" wide rearward compartmentation. Includes (1) 56" wide compartment over the wheel well. | 10812 |
| 3100-0096 | Driver side body with full height 42" wide forward and 42" wide rearward compartmentation. Includes (1) 56" wide compartment over the wheel well. | 11555 |
| 3100-0097 | Driver side body with full height 48" wide forward and 48" wide rearward compartmentation. Includes (1) 56" wide compartment over the wheel well. | 12362 |
| 3100-0098 | Driver side body with upper and lower compartmentation. Includes 24" wide forward and 36" wide rearward lower compartments and (3) opening upper compartments. | 9906 |
| 3100-0099 | Driver side body with upper and lower compartmentation. Includes 30" wide forward and 36" wide rearward lower compartments and (3) opening upper compartments. | 10564 |
| 3100-0100 | Driver side body with upper and lower compartmentation. Includes 36" wide forward and 36" wide rearward lower compartments and (3) opening upper compartments. | 11270 |
| 3100-0101 | Driver side body with upper and lower compartmentation. Includes 42" wide forward and 42" wide rearward lower compartments and (3) opening upper compartments. | 12027 |
| 3100-0102 | Driver side body with upper and lower compartmentation. Includes 48" wide forward and 48" wide rearward lower compartments and (3) opening upper compartments. | 12835 |
| 3100-0103 | Driver side body with upper and lower compartmentation. Includes 42" wide forward and 42" wide rearward lower compartments (3) opening upper compartments with portable water tank storage with access door at rear. | 12386 |
| 3100-0104 | Driver side body with upper and lower compartmentation. Includes 48" wide forward and 48" wide rearward lower compartments (3) opening upper compartments with portable water tank storage with access door at rear. | 13220 |
| 3100-0105 | Driver side body with full height 24" wide forward and 50" wide rearward extended compartmentation. Includes (1) 56" wide compartment over the wheel well. | 10093 |
| 3100-0106 | Driver side body with full height 30" wide forward and 50" wide rearward extended compartmentation. Includes (1) 56" wide compartment over the wheel well. | 10756 |
| 3100-0107 | Driver side body with full height 36" wide forward and 50" wide rearward extended compartmentation. Includes (1) 56" wide compartment over the wheel well. | 11458 |
| 3100-0108 | Driver side body with full height 42" wide forward and 56" wide rearward extended compartmentation. Includes (1) 56" wide compartment over the wheel well. | 12215 |
| 3100-0109 | Driver side body with full height 48" wide forward and 62" wide rearward extended compartmentation. Includes (1) 56" wide compartment over the wheel well. | 13023 |
| 3100-0110 | Driver side body with full height 24" wide forward and 50" wide rearward enhanced extended compartmentation. Includes (1) 56" wide compartment over the wheel well. | 10397 |
| 3100-0111 | Driver side body with full height 30" wide forward and 50" wide rearward enhanced extended compartmentation. Includes (1) 56" wide compartment over the wheel well. | 11055 |
| 3100-0112 | Driver side body with full height 36" wide forward and 50" wide rearward enhanced extended compartmentation. Includes (1) 56" wide compartment over the wheel well. | 11760 |
| 3100-0113 | Driver side body with full height 42" wide forward and 56" wide rearward enhanced extended compartmentation. Includes (1) 56" wide compartment over the wheel well. | 12518 |
| 3100-0114 | Driver side body with full height 48" wide forward and 62" wide rearward enhanced extended compartmentation. Includes (1) 56" wide compartment over the wheel well. | 13325 |
| 3100-0115 | Driver side body with full height 36" wide forward and 36" wide rearward compartmentation. Includes (1) 56" wide compartment over the wheel well. | 11555 |
| 3100-0116 | Driver side body with full height 42" wide forward and 42" wide rearward compartmentation. Includes (1) 56" wide compartment over the wheel well. | 12362 |
| 3100-0117 | Driver side body with full height 48" wide forward and 48" wide rearward compartmentation. Includes (1) 56" wide compartment over the wheel well. | 13227 |

| Item No. | Description | |
|---|---|---|
| 3100-0118 | Driver side body with full height 24in. wide forward and 36in. wide rearward compartmentation. Includes (1) 56in. wide compartment over the wheel well and 30 degree rear body angle for greater angle of departure. | 9799 |
| 3100-0119 | Driver side body with full height 30" wide forward and 36" wide rearward compartmentation. Includes (1) 56" wide compartment over the wheel well and 30 degree rear body angle for greater angle of departure. | 10458 |
| 3100-0120 | Driver side body with full height 36" wide forward and 36" wide rearward compartmentation. Includes (1) 56" wide compartment over the wheel well and 30 degree rear body angle for greater angle of departure. | 11163 |
| 3100-0121 | Stainless steel driver side body with full height 36" wide forward and 48" wide rearward compartmentation (interior). Includes (1) 60" wide compartment over the wheel well. | 11878 |
| 3100-0122 | Stainless steel driver side body with full height 48" wide forward and 48" wide rearward compartmentation (interior). Includes (1) 60" wide compartment over the wheel well. | 13599 |
| 3100-0123 | Stainless steel driver side body with full height 60" wide forward and 60" wide rearward compartmentation (interior). Includes (1) 60" wide compartment over the wheel well. | 14552 |
| 3100-0124 | Stainless steel driver side body with full height 48" wide forward and 60" wide rearward compartmentation (interior). Includes (1) 60" wide compartment over the wheel well. | 14279 |
| 3100-0125 | Driver side body with full height 60" wide forward and 42" wide rearward compartmentation. Includes (1) 56" wide compartment over the wheel well. | 14154 |
| 3100-0126 | Driver side body with upper and lower compartmentation. Includes 60" wide forward and 42" wide rearward lower compartments and (3) opening upper compartments. | 13732 |
| 3100-0127 | Driver side body with upper and lower compartmentation. Includes 60" wide forward and 42" wide rearward lower compartments (3) opening upper compartments with portable water tank storage with access door at rear. | 14110 |
| 3100-0128 | Driver side body with full height 60" wide forward and 42" wide rearward compartmentation. Includes (1) 56" wide compartment over the wheel well. | 13227 |
| 3100-0129 | Driver side body with full height 36" wide rearward compartmentation. Includes (1) 56" wide compartment over the wheel well. | 8815 |
| 3100-0130 | Driver side body with full height 36" wide rearward compartmentation. Includes (1) 56" wide compartment over the wheel well and 30 degree rear body angle for greater angle of departure. | 9181 |
| 3100-0131 | Stainless steel driver side body with full height 36" wide forward and 48" wide rearward compartmentation (interior). Includes (1) 60" wide compartment over the wheel well. | 11878 |
| 3100-0132 | Stainless steel driver side body with full height 48" wide forward and 48" wide rearward compartmentation (interior). Includes (1) 60" wide compartment over the wheel well. | 13599 |
| 3100-0133 | Stainless steel driver side body with full height 60" wide forward and 60" wide rearward compartmentation (interior). Includes (1) 60" wide compartment over the wheel well. | 14552 |
| 3100-0134 | Stainless Steel Driver side body with full height 48" wide forward and 60" wide rearward compartmentation (interior). Includes (1) 60" wide compartment over the wheel well. | 14279 |
| 3100-0135 | Driver side body with full height 60" wide forward and 56" wide rearward compartmentation. Includes (1) 56" wide compartment over the wheel well. Top Mount eMAX Only. | 14154 |
| 3100-0136 | Driver side tunnel to hold: Lower section (3) Backboards. Upper section (1) Divider full length of tunnel bolted at rear of tunnel and held in place by a slot in the front of the tunnel for removability. | 672 |
| 3100-0137 | Driver side compartment top storage box. Box to be smooth plate and painted job color with diamond plate top. Box to have a rear vertically hinged door with push-button latch. Box to have diamond plate lids with push button latches. | 2004 |
| 3100-0138 | Driver side body with upper and lower compartmentation. Includes 24" wide forward and 36" wide rearward lower compartments and (2) opening upper compartments. | 9906 |
| 3100-0139 | Compartment L1 to have rescue style interior compartment depth and height. | 1602 |
| 3100-0142 | Driver side body with full height 42" wide forward and 48" wide rearward compartmentation. Includes (1) 56" wide compartment over the wheel well and upper area for recessed pike pole storage. | 11555 |
| 3100-0143 | Driver side body with full height 52" wide forward and 52" wide rearward compartmentation. Includes (1) 56" wide compartment over the wheel well. | 13227 |
| 3100-0144 | Driver side body with full height 36" wide forward and 50" wide rearward compartmentation. Includes (1) 56" wide compartment over the wheel well. | 11760 |
| 3100-0145 | Driver side body with full height 30" wide forward and 50" wide rearward compartmentation. Includes (1) 56" wide compartment over the wheel well. | 11055 |
| 3100-0146 | Driver side body with full height 24" wide forward and 50" wide rearward compartmentation. Includes (1) 56" wide compartment over the wheel well. | 10397 |
| 3100-0148 | Driver side body with full height 42" wide forward and 56" wide rearward compartmentation. Includes (1) 56" wide compartment over the wheel well. | 12466 |
| 3100-0149 | Driver side body with full height 36" wide forward and 42" wide rearward compartmentation. Includes (1) 56" wide compartment over the wheel well. | 12362 |

| Item No. | Description | |
|---|---|---|
| 3100-0151 | Driver side body with 42" wide x 38" high wide forward lower compartmentation and 42" wide x 26.75" high forward upper compartmentation. 42" wide full height rearward compartmentation. Includes (1) 56" wide compartment over the wheel well. | 13600 |
| 3100-0152 | Driver side body with full height 36" wide forward and 50" wide rearward enhanced extended compartmentation. Includes (1) 56" wide compartment over the wheel well. | 12502 |
| 3100-0153 | Driver side body with full height 42" wide forward and 56" wide rearward enhanced extended compartmentation. Includes (1) 56" wide compartment over the wheel well. | 13311 |
| 3100-0154 | Driver side body with full height 48" wide forward and 62" wide rearward enhanced extended compartmentation. Includes (1) 56" wide compartment over the wheel well. | 14177 |
| 3100-0155 | Driver side body with full height 60" wide forward and 56" wide rearward enhanced extended compartmentation. Includes (1) 56" wide compartment over the wheel well. | 15103 |
| 3100-0156 | Driver side body with full height 30" wide forward and 36" wide rearward compartmentation. Includes (1) 56" wide compartment over the wheel well. Front and rear compartment opening height to be 66.75" high. | 10805 |
| 3100-0159 | Driver side body with full height 42" wide forward and 56" wide rearward enhanced extended compartmentation. Includes (1) 56" wide compartment over the wheel well and one (1) storage tunnel and access door at rear. | 16376 |
| 3100-0160 | Driver side body with full height 30" wide forward and 50" wide rearward enhanced extended compartmentation. Includes (1) 56" wide compartment over the wheel well. | 11751 |
| 3100-0161 | Driver side body with 42" wide x 30" high wide forward lower compartmentation and 42" wide x 34.75" high forward upper compartmentation. 42" wide full height rearward compartmentation. Includes (1) 56" wide compartment over the wheel well. | 14897 |
| 3100-0162 | 2-Arm Ladder Rack. The ladder rack includes amber lights on each end to visually indicate when the rack is in motion. Ladder rack to hold storage box with (1) vertically hinged rearward and (2) horizontally hinged outboard (when ladder rack in the down position) diamond plate doors with push button latches. The outboard horizontally hinged door(s) to have chains set to open at approx 160 degrees. Forward section of the box to hold (2) backboards and the rearward section to hold (1) stokes basket. | 19400 |
| 3100-0163 | Driver side body with full height 50" wide forward and 50" wide rearward enhanced extended compartmentation. Includes (1) 56" wide compartment over the wheel well. | 13311 |
| 3100-0164 | Driver side body with full height 56" wide forward and 56" wide rearward enhanced extended compartmentation. Includes (1) 56" wide compartment over the wheel well. | 14177 |
| 3100-0165 | Driver side body with full height 62" wide forward and 62" wide rearward enhanced extended compartmentation. Includes (1) 56" wide compartment over the wheel well. | 15039 |
| 3100-0166 | Driver side tunnel to hold: [#LOC]. | 672 |
| 3100-0168 | Driver side body with full height 30" wide forward and 50" wide rearward enhanced extended compartmentation. Includes (1) 56" wide compartment over the wheel well. Rear compartment to be pumper style enhanced extended (shallow upper and deep lower compartmentation). | 13698 |
| 3100-0170 | Driver side body with 62" wide full height forward enhanced extended compartment 36" wide half height second forward compartment and 50" wide half height rearward compartmentation. | 19484 |
| 3100-0171 | Driver side body with full height 24" wide forward and 50" wide rearward extended compartmentation. Includes (1) 33" wide compartment over the wheel well and (1) Zico Overhead Ladder Rack. | 16975 |
| 3100-0172 | Driver side body with full height 24" wide forward and 56" wide rearward extended compartmentation. Includes (1) 56" wide compartment over the wheel well. | 11009 |
| 3100-0173 | Driver side body with full height 24" wide forward and 50" wide rearward enhanced extended compartmentation. Includes (1) 56" wide compartment over the wheel well. Rear compartment to be pumper style enhanced extended (shallow upper and deep lower compartmentation). | 14555 |
| 3100-0174 | Driver side body with upper and lower compartmentation. Includes 36" wide forward and 50" wide rearward extended lower compartments and (3) opening upper compartments. | 16551 |
| 3100-0175 | Driver side body with full height 36" wide forward and 36" wide rearward compartmentation. Includes (1) 56" wide compartment over the wheel well and one (1) storage tunnel. | 14618 |
| 3100-0176 | Driver side body with full height 36" wide forward and 50" wide rearward enhanced extended compartmentation. Includes (1) 56" wide compartment over the wheel well and one (1) storage tunnel. | 15566 |
| 3100-0177 | Driver side body with full height 42" wide forward and 42" wide rearward compartmentation. Includes (1) 56" wide compartment over the wheel well and one (1) storage tunnel. | 15426 |
| 3100-0178 | Driver side body with full height 42" wide forward and 56" wide rearward enhanced extended compartmentation. Includes (1) 56" wide compartment over the wheel well and one (1) storage tunnel. | 16376 |
| 3100-0179 | Driver side body with full height 48" wide forward and 48" wide rearward compartmentation. Includes (1) 56" wide compartment over the wheel well and one (1) storage tunnel. | 16291 |
| 3100-0180 | Driver side body with full height 48" wide forward and 62" wide rearward enhanced extended compartmentation. Includes (1) 56" wide compartment over the wheel well and one (1) storage tunnel. | 17241 |

| Item No. | Description | |
|---|---|---|
| 3100-0181 | Driver side body with full height 60" wide forward and 42" wide rearward compartmentation. Includes (1) 56" wide compartment over the wheel well and one (1) storage tunnel. | 17219 |
| 3100-0182 | Driver side body with full height 60" wide forward and 56" wide rearward enhanced extended compartmentation. Includes (1) 56" wide compartment over the wheel well and one (1) storage tunnel. | 18164 |
| 3100-0183 | Driver side body with full height 36" wide forward and 50" wide rearward enhanced extended compartmentation (2008 body design) with (1) 56" wide compartment over the wheel well. | 18150 |
| 3100-0185 | Driver side body with full height 20" wide forward and 50" wide rearward extended compartmentation. Includes (1) 56" wide compartment over the wheel well. | 9870 |
| 3100-0186 | Driver side upper body extension. Does not include any external doors. External framework and platework only. Platework shall be recessed. | 2330 |
| 3100-0187 | Stainless steel driver side body with full height 30" wide forward and 40" wide rearward compartmentation. Includes (1) 54" wide compartment over the wheel well. | 26385 |
| 3100-0188 | Stainless steel driver side body with full height 40" wide forward and 40" wide rearward compartmentation. Includes (1) 54" wide compartment over the wheel well. | 27848 |
| 3100-0189 | Stainless steel driver side body with full height 48" wide forward and 40" wide rearward compartmentation. Includes (1) 54" wide compartment over the wheel well. | 28653 |
| 3100-0190 | Stainless steel driver side body with full height 30" wide forward and 58" wide rearward enhanced extended compartmentation. Includes (1) 54" wide compartment over the wheel well. | 27347 |
| 3100-0191 | Stainless steel driver side body with full height 40" wide forward and 58" wide rearward enhanced extended compartmentation. Includes (1) 54" wide compartment over the wheel well. | 28810 |
| 3100-0192 | Stainless steel driver side body with full height 48" wide forward and 58" wide rearward enhanced extended compartmentation. Includes (1) 54" wide compartment over the wheel well. | 29617 |
| 3100-0194 | Stainless steel driver side body with full height/full depth 48" wide forward and 40" wide rearward compartmentation. Includes (1) 54" wide compartment over the wheel well. | 28653 |
| 3100-0195 | Driver 3/4 side body with full height 36" wide forward and 36" wide rearward compartmentation. Includes (1) 56" wide compartment over the wheel well. | 6749 |
| 3100-0196 | Driver half side body with (2) forward compartments (48" and 30" wide) and one rearward area for locating of side tank dump. | 5262 |
| 3100-0197 | Driver half side body with (2) forward compartments (48" and 30" wide) and (1) rearward compartment (24"). | 6192 |
| 3100-0198 | Driver 3/4 side body with (2) lower forward compartments (48" and 30" wide) (3) upper compartments (54") and one lower rearward area for locating of side tank dump. | 7277 |
| 3100-0199 | Driver 3/4 side body with (2) lower forward compartments (48" and 30" wide) (3) upper compartments (54") and (1) lower rearward compartment (24"). | 8201 |
| 3100-0201 | Driver full height side body with (2) lower forward compartments (48" and 30" wide) (3) upper compartments (54") and one lower rearward area for locating of side tank dump. | 9293 |
| 3100-0202 | Driver full height side body with (2) lower forward compartments (48" and 30" wide) (3) upper compartments (54") and (1) lower rearward compartment (24"). | 10218 |
| 3100-0203 | Driver full height side body with (2) full height rescue style forward compartments (48" and 30" wide) (1) upper compartment (61" and offset rearward of the rack opening) and one lower rearward area for locating of side tank dump. | 9293 |
| 3100-0204 | Driver full height side body with (2) full height rescue style forward compartments (48" and 30" wide) (1) upper compartment (61" and offset rearward of the rack opening) and (1) lower rearward compartment (24"). | 10218 |
| 3100-0207 | Driver full height side body with (2) lower forward compartments (48" and 30" wide) (3) upper compartments (54") with rear compartment face access door for portable tank storage and one lower rearward area for locating of side tank dump. | 10761 |
| 3100-0208 | Driver full height side body with (2) lower forward compartments (48" and 30" wide) (3) upper compartments (54") with rear compartment face access door for portable tank storage and (1) lower rearward compartment (24"). | 11684 |
| 3100-0209 | Driver side body with full height 24" wide forward and 50" wide rearward enhanced extended compartmentation. Includes (1) 56" wide compartment over the wheel well. | 11001 |
| 3100-0210 | Driver full height side body with (2) full height rescue style forward compartments (48" and 30" wide) (2) upper compartment (40" wide) and (1) lower rearward compartment (24"). | 10218 |
| 3100-0211 | Driver full height side body with (2) full height rescue style forward compartments (48" and 30" wide) (2) upper compartments (40" wide) and one lower rearward area for locating of side tank dump. | 9293 |
| 3100-0213 | Stainless steel driver side body with full height 48" wide forward and 48" wide rearward compartmentation. Includes (1) 54" wide compartment over the wheel well. | 29520 |
| 3100-0214 | Stainless steel driver side body with full height 54" wide forward and 54" wide rearward compartmentation. Includes (1) 54" wide compartment over the wheel well. | 30578 |
| 3100-0215 | Stainless steel driver side body with full height 60" wide forward and 60" wide rearward compartmentation. Includes (1) 54" wide compartment over the wheel well. | 31637 |
| 3100-0216 | Compartment L1 to be 48.75" high in full depth lower area due to pipe routing for deck gun in hosebed storage pan. | 606 |

| Item No. | Description | |
|---|---|---|
| 3100-0219 | Driver half side body with 42" wide forward and 42" wide rearward compartmentation. Includes adjustable ladder tracks. | 5779 |
| 3100-0220 | Overhead Ladder Rack to be offset forward includes shifting compartment (rearward) over the wheel well. | 639 |
| 3100-0221 | Driver half side tandem body with 30" wide forward and 30" wide rearward compartmentation. | 7895 |
| 3100-0222 | Driver half side tandem body with 42" wide forward and 42" wide rearward compartmentation. | 8625 |
| 3100-0223 | Driver half side tandem body with 60" wide forward and 54" wide rearward compartmentation. | 9464 |
| 3100-0224 | Driver 3/4 side tandem body with full height 30" wide forward and 30" wide rearward compartmentation. Includes (2) 51.5" wide compartments over the wheel well. | 9142 |
| 3100-0225 | Driver 3/4 side tandem body with full height 42" wide forward and 42" wide rearward compartmentation. Includes (2) 51.5" wide compartments over the wheel well. | 10053 |
| 3100-0226 | Driver 3/4 side tandem body with full height 60" wide forward and 54" wide rearward compartmentation. Includes (2) 51.5" wide compartments over the wheel well. | 11099 |
| 3100-0227 | Driver side tandem body with upper and lower compartmentation. Includes 30" wide forward and 30" wide rearward compartments and (4) opening upper compartments. | 13394 |
| 3100-0228 | Driver side tandem body with upper and lower compartmentation. Includes 42" wide forward and 42" wide rearward compartments and (4) opening upper compartments. | 14858 |
| 3100-0229 | Driver side tandem body with upper and lower compartmentation. Includes 60" wide forward and 54" wide rearward compartments and (4) opening upper compartments. | 16562 |
| 3100-0230 | Driver side tandem body with upper and lower compartmentation. Includes 30" wide forward and 30" wide rearward compartments and (4) opening upper compartments. Includes overhead rack opening centered between upper compartments. | 13928 |
| 3100-0231 | Driver side tandem body with upper and lower compartmentation. Includes 42" wide forward and 42" wide rearward compartments and (4) opening upper compartments. Includes overhead rack opening centered between upper compartments. | 15450 |
| 3100-0232 | Driver side tandem body with upper and lower compartmentation. Includes 60" wide forward and 54" wide rearward compartments and (4) opening upper compartments. Includes overhead rack opening centered between upper compartments. | 17223 |
| 3100-0233 | Driver side tandem body with full height 30" wide forward and 30" wide rearward compartmentation. Includes (2) 51.5" wide compartments over the wheel well. | 12924 |
| 3100-0234 | Driver side tandem body with full height 42" wide forward and 42" wide rearward compartmentation. Includes (2) 51.5" wide compartments over the wheel well. | 14386 |
| 3100-0235 | Driver side tandem body with full height 60" wide forward and 54" wide rearward compartmentation. Includes (2) 51.5" wide compartments over the wheel well. | 16057 |
| 3100-0236 | Driver side tandem body with full height 30" wide forward and 30" wide rearward compartmentation. Includes (2) 42" wide compartments over the wheel well and overhead rack opening centered between upper compartments. | 13439 |
| 3100-0237 | Driver side tandem body with full height 42" wide forward and 42" wide rearward compartmentation. Includes (2) 42" wide compartments over the wheel well and overhead rack opening centered between upper compartments. | 14959 |
| 3100-0238 | Driver side tandem body with full height 60" wide forward and 54" wide rearward compartmentation. Includes (2) 42" wide compartments over the wheel well and overhead rack opening centered between upper compartments. | 16699 |
| 3100-0243 | Driver side body with full height 42" wide forward and 50" wide rearward compartmentation. Includes (1) 56" wide compartment over the wheel well. | 12112 |
| 3100-0244 | Driver half side tandem body with with 42" wide forward and one rearward area for locating of side tank dump rearward of the wheel well. | 8927 |
| 3100-0245 | Driver side body with full height 60" wide forward and 56" wide rearward compartmentation. Includes (1) 56" wide compartment over the wheel well. Side Mount eMAX only. | 14154 |
| 3100-0246 | Driver side body with upper and lower compartmentation. Includes 36" wide forward and 31" wide rearward lower compartments and (2) opening upper compartments. | 11270 |
| 3100-0247 | Driver side body with full height 46" wide forward and 56" wide rearward enhanced extended compartmentation. Includes (1) 56" wide compartment over the wheel well. L1 compartment to be Rescue Pumper style individual compartments. | 14779 |
| 3100-0248 | Driver side body with full height 50" wide forward and 50" wide rearward compartmentation. Includes (1) 56" wide compartment over the wheel well. | 14154 |
| 3100-0250 | Driver side body with full height 60" wide forward and 62" wide rearward enhanced extended compartmentation. Includes (1) 56" wide compartment over the wheel well. | 15565 |
| 3100-0251 | Driver side body with full height 60" wide forward and 42" wide rearward compartmentation. Includes (1) 33" wide compartment over the wheel well and (1) Zico Overhead Portable Tank Rack. Rack to hold (1) 3000 gallon portable tank. | 19727 |
| 3100-0252 | Driver side body with full height 42" wide forward and 56" wide rearward enhanced extended compartmentation. Includes (1) 56" wide compartment over the wheel well. | 13914 |
| 3100-0253 | Driver full height side body with (3) full height rescue style forward compartments (39" and 39" wide and rearward of wheel well 24" wide)(1) upper compartment over the wheel well 56" wide. | 10303 |

| Item No. | Description | |
|---|---|---|
| 3100-0254 | Driver side body with upper and lower compartmentation. Includes 48" wide forward and 62" wide enhanced extended rearward lower compartments and (3) opening upper compartments. | 14011 |
| 3100-0257 | Driver side body with full height 36" wide forward and 50" wide rearward enhanced extended compartmentation. Includes (1) 33" wide compartment over the wheel well and (1) Zico Overhead Ladder Rack. | 18642 |
| 3100-0259 | Driver side diamond plate roof top compartment. Includes smooth plate painted vertical hinged access door at the rear with push button latch to be wired to door ajar indicator in cab. | 1672 |
| 3100-0260 | Driver side body with full height 36" wide forward and 45" wide rearward compartmentation. Includes (1) 56" wide compartment over the wheel well. | 12411 |
| 3100-0262 | Driver side body with full height 32" wide forward and 50" enhanced extended rearward compartmentation. Includes (1) 56" wide compartment over the wheel well. | 9783 |
| 3100-0263 | Driver side body with full height 54" wide forward and 48" wide rearward compartmentation. Includes (1) 56" wide compartment over the wheel well. Side Mount eMAX only. | 13268 |
| 3100-0264 | Driver side body with full height 26" and 56" wide forward compartments and 56" wide rearward compartmentation. Includes (1) 56" wide compartment over the wheel well. Side Mount eMAX only. | 15629 |
| 3100-0265 | Driver side diamond plate roof top compartment. Includes (2) hinged lift-up access doors with turn latches and grab handle(s) and (1) vertical hinged access door at the rear with push button latch to be. Each lid to have (1) bracket mounted LED light and to be wired to door ajar indicator in cab. | 2407 |
| 3100-0266 | Driver side body with full height/full depth 60" wide front and 54" wide rear compartment. Includes (1) 60" wide compartment over the wheel well. Side mount SS eMAX only. | 17269 |
| 3100-0267 | Driver side tandem body with upper and lower compartmentation. Includes 60" wide forward and 54" wide rearward compartments and (1) opening forward upper compartment with painted panels rearward. | 17724 |
| 3100-0270 | Rear aluminum smooth plate painted job color vertical hinged door on driver side roof top compartments. Includes thumb latch and wiring for door ajar switch. | 231 |
| 3100-0271 | Stainless steel driver side body with full height/full depth 36" wide front and 48" rear for reverse hinge compartment L1 door. Includes 54" wide compartment above rear wheels. | 30172 |
| 3100-0273 | Driver side roof top compartment contents: (2) 6" x 10' hard suction hoses (not included) stored vertical. Includes vertical partition around hard suction hoses. | 1142 |
| 3100-0274 | Driver side body with full height 36" wide forward and 56" wide rearward enhanced extended compartmentation. Includes (1) 56" wide compartment over the wheel well. Rescue Pumper individual style compartments. | 14717 |
| 3100-0275 | Driver side tandem body with upper and lower compartmentation. Includes 30" wide forward and 54" wide rearward compartments and (4) opening upper compartments. Includes offseting upper compartments forward due to deck gun location and access panel on upper rear compartment face to deck gun piping. | 14866 |
| 3100-0277 | Driver side tandem body with 60" wide forward and 54" wide rearward compartmentation. Forward compartment to be full height rearward to be half height. | 11661 |
| 3100-0279 | Driver side body with full height 54" wide forward and 36" wide rearward compartmentation. Includes (1) 56" wide compartment over the wheel well. Side Mount eMAX only. | 12802 |
| 3100-0280 | Driver side roof top assembly. Does not include external upper doors or internal platework. External framework and platework only. | 1679 |
| 3100-0281 | Driver side body with full height 36" wide forward and 36" wide rearward compartmentation. Includes (1) 56" wide compartment over the wheel well and 30 degree rear body angle for greater angle of departure. L1 compartment to be Rescue Pumper style individual compartments. | 12764 |
| 3100-0283 | Driver half side body with (2) forward compartments (48" and 30" wide) and one rearward area for locating of side tank dump. Includes (1) 20" wide compartment above the lower forward comaprtment. | 5778 |
| 3100-0285 | Driver side tandem body with full height 42" wide forward and 59" wide rearward compartmentation. Includes (2) 51.5" wide compartments over the wheel well. | 16368 |
| 3100-0288 | Stainless steel driver side body with full height 54" wide front and 54" rear with reduced upper depth for "T" tank. Includes 54" wide compartment over rear wheels. | 29979 |
| 3100-0289 | Stainless steel driver side body with full height 48" wide forward and 70" wide rearward enhanced extended compartmentation. Includes (1) 54" wide compartment over the wheel well. | 31838 |
| 3100-0290 | Driver side body with full height 48" wide forward and 48" wide rearward compartmentations. Includes (1) 56" wide compartment over the wheel well and one (1) storage tunnel. Tunnel to be behind L2 and L3 compartments only. L1 compartment to be full depth full height with notch in upper rearward wall and boxed in cover for hard suction. | 17921 |
| 3100-0291 | Driver side body with full height 48" wide forward and 48" wide rearward compartmentation. Includes (1) 56" wide compartment over the wheel well and one (1) storage tunnel. Tunnel to be behind L2 and L3 compartments only. L1 compartment to be full depth full height with notch in upper rearward wall and boxed in cover for hard suction. | 17927 |
| 3100-0292 | Stainless steel driver side body high side 60" front and 60" rear. Five compartments tandem axle. For use with single arm overhead portable tank rack. | 19929 |

| Item No. | Description | |
|---|---|---|
| 3100-0293 | Driver side tandem body with upper and lower compartmentation. Includes 30" wide forward and 54" wide rearward compartments and (4) opening upper compartments. Includes offseting upper compartments forward due to deck gun location and access panel on upper rear compartment face to deck gun piping. | 14866 |
| 3100-0294 | Driver side standard width roof top compartment contents: (2) 6" x 10' hard suction hoses (not included) stored vertical. The hard suction storage shall have a front wall which will prevent the hoses from sliding too far forward while also creating a full depth coffin storage area forward of the wall if applicable. | 363 |
| 3100-0295 | Driver side body with full height 26" and 56" wide forward compartments and 56" wide rearward compartmentation. Includes (1) 56" wide compartment over the wheel well for top mount application. | 15629 |
| 3100-0298 | Stainless steel driver side short Boston style body with low height 36" front and 40" rear and (2) lift-up doors above. Includes 60" wide fender panel. For use with optional suicide hinged L1 door. | 28966 |
| 3100-0299 | Driver side tandem body with full height (1) 60" wide forward and (1) 60" wide rearward compartmentation. For use with Rear Mount pump. | 19878 |
| 3100-0300 | Driver side body with full height/full depth 60" wide front and 54" wide rear compartment. Includes (1) 60" wide compartment over the wheel well. Top mount SS eMAX only. | 17269 |
| 3100-0301 | Stainless steel driver side body with full height 60" wide forward and 60" wide rearward compartmentation. Includes (1) 54" wide compartment over the wheel well. | 35104 |
| 3100-0302 | Stainless steel driver side body with full height 48" wide forward and 58" wide rearward enhanced extended compartmentation. Includes (1) 60" wide compartment over the wheel well. Body interior height is 76" high. | 30726 |
| 3100-0303 | Stainless steel driver side body with full height 48" wide forward and 54" wide rearward compartmentation. Includes (1) 54" wide compartment over the wheel well. | 29617 |
| 3100-0304 | Driver side tandem body with (2) 34" wide forward and 54" wide rearward compartmentation. Forward compartments to be full height rearward to be half height. | 12992 |
| 3100-0306 | (2) driver side roof top compartments with removable floors and extra width to inboard side. Includes hinged raised compartment lids with turn latches grab handle(s) and gas shock hold open and drain line(s) ran to below body. Each lid to have (1) bracket mounted LED light and to be wired to door ajar indicator in cab. | 7159 |
| 3100-0307 | (2) Driver side roof top compartments. Includes hinged raised aluminum smooth plate with black Scorpion coating (IPOS diamond plate) compartment lids with turn latches and grab handle(s). Each lid to have (1) bracket mounted LED light and to be wired to door ajar indicator in cab. | 3238 |
| 3100-0308 | Driver side body with full height 60" wide forward and 54" wide rearward compartmentation. Includes (1) 60" wide compartment over the wheel well. Top mount SS eMAX only. | 21005 |
| 3100-0309 | Driver side body with full height 30" and 60" wide forward compartments and 54" wide rearward compartmentation. Includes (1) 60" wide compartment over the wheel well. Side mount SS eMAX only. | 19068 |
| 3100-0311 | Driver side body with full height 30" and 60" wide forward compartments and 54" wide rearward compartmentation. Includes (1) 60" wide compartment over the wheel well. Top mount SS eMAX only. | 19068 |
| 3100-0313 | Driver side body with full height 50" wide forward and 42" wide rearward compartmentation. Includes (1) 56" wide compartment over the wheel well. Rear perimeter or body raised 3" for improved departure angle. Side Mount eMAX only. | 12802 |
| 3100-0314 | Driver full height side body with upper and lower compartmentation. Includes 42" wide forward and 56" wide rearward lower enhanced compartmentation and (3) opening upper compartments. For use with ladder storage in the hosebed | 12518 |
| 3100-0316 | Stainless steel driver side body with rescue style full height 30" front 40" rear and 60" wide fender panel L2 compartment. For use with suicide hinged L1 door (if applicable). | 28966 |
| 3100-0317 | Horizontal partition located in driver side roof top compartment over DOT bottles. Floor to be provided above the DOT bottles to use remaining area above. | 1004 |
| 3100-0318 | Driver side body with full height 48" wide forward and 56" wide rearward enhanced extended compartmentation. Includes (1) 56" wide compartment over the wheel well. | 14177 |
| 3100-0319 | Driver side roof top compartment contents: (1) 10' hard suction hose (not included) stored horizontal. Includes stop bracket rearward of hard suction hoses and Nylatron compartment flooring. | 575 |
| 3100-0321 | Driver side body with upper and lower compartmentation. Includes 42" wide forward and 42" wide rearward lower compartments (3) opening upper compartments with portable water tank storage with access door at rear. Smooth plate compartment top painted black durabak. | 12910 |
| 3100-0322 | Driver 3/4 side body with (3) full height rescue style (2) forward compartments (48" and 30" wide) and (1) rearward compartment (24"). Includes (1) 56" wide compartment over the wheel well. | 8690 |
| 3100-0324 | Driver side roof top compartment. Includes vertically hinged access door at the rear with push button latch to be wired to door ajar indicator in cab. | 1672 |

| Item No. | Description | |
|---|---|---|
| 3100-0325 | (2) driver side roof top compartments with extra width to inboard side. Includes hinged raised compartment lids with turn latches grab handle(s) and gas shock hold open and drain line(s) ran to below body. Each lid to have (2) bracket mounted LED lights and to be wired to door ajar indicator in cab. | 5840 |
| 3100-0326 | Driver side tandem body with upper and lower compartmentation. Includes 30" wide forward and 30" wide rearward compartments and (4) opening upper compartments. | 14254 |
| 3100-0327 | Driver side body with full height 50" wide forward and 42" wide rearward compartmentation. Includes (1) 56" wide compartment over the wheel well. Rear perimeter or body raised 3" for improved departure angle. | 12802 |
| 3100-0329 | Stainless steel driver side body with full height 48" wide forward and 48" wide rearward compartmentation. Includes (1) 54" wide compartment over the wheel well. | 30269 |
| 3100-0331 | Driver side body with full height 24" wide forward and 36" wide rearward compartmentation. Includes (1) 56" wide compartment over the wheel well. Rear bottom corner of truck will be angled 30 degrees for a greater rear angle of departure. | 10748 |
| 3100-0332 | Driver side body with full height 36" wide forward and 62" wide rearward enhanced extended compartmentation. Includes (1) 56" wide compartment over the wheel well. | 13432 |
| 3100-0333 | Driver full height side body with 36" wide forward and 48" wide rearward compartmentation. Includes (2) 38" wide compartments over the wheel well and one forward area for side tank dump. For use with custom chassis only. | 10738 |
| 3100-0334 | Driver side tandem body with full height 30" wide forward and 30" wide rearward compartmentation. Includes (2) 51.5" wide compartments over the wheel well. | 14077 |
| 3100-0335 | Driver side body with full height 48" wide forward and 48" wide rearward compartmentation. Includes (1) 56" wide compartment over the wheel well. Compartment material to be 5083-H321. | 14037 |
| 3100-0336 | Driver full height side body with 42" wide and 20" wide forward compartments and 42" wide rearward compartment. Includes (1) 56" wide compartments over the wheel well. For use with custom chassis only. | 10738 |
| 3100-0337 | Driver side body with full height 48" wide forward and 54" wide rearward compartmentation. Includes (1) 56" wide compartment over the wheel well. | 13464 |
| 3100-0339 | Driver 3/4 side body with upper and lower compartmentation. Includes 42" wide forward and 42" wide rearward lower compartments and (2) opening upper compartments. | 7694 |
| 3100-0340 | Driver side ERV body with full height 37" forward and 52" rearward. Includes (1) 56" wide compartment over the wheel well. Includes (2) roof top compartments with hinged raised lids with thumb latches grab handle(s) and gas shock hold open and drain line(s) ran to below body.Eack lid to have (1) bracket mounted LED light and to be wired to door ajar indicator in cab. | 20546 |
| 3100-0341 | Driver side body with full height 24" wide forward and 36" wide rearward compartmentation. Includes (1) 56" wide compartment over the wheel well. | 10748 |
| 3100-0342 | Driver side body with full height 38" wide forward and 56" wide rearward compartment. Includes (1) 56" wide compartment over the wheel well. | 13311 |
| 3100-0343 | (2) Driver side roof top compartments. Includes hinged raised compartment lids with thumb latches and grab handle(s). Each lid to have (1) bracket mounted LED light and to be wired to door ajar indicator in cab. | 2872 |
| 3100-0344 | Driver half side tandem body with (2)41" wide forward and (2)32" wide rearward compartmentation. | 12783 |
| 3100-0345 | Stainless steel driver side body with full height 48" wide forward and 54" wide rearward compartmentation. Includes (1) 60" wide compartment over the wheel well. | 12860 |
| 3100-0346 | Stainless steel driver side body with full height 40" wide forward and 40" wide rearward compartmentation with reduced upper depth. Includes (1) 60" wide compartment over the wheel well. | 10486 |
| 3100-0347 | Stainless steel driver side body with full height/full depth 40" wide forward and 48" wide rearward compartmentation. Includes (1) 60" wide compartment over the wheel well. | 28653 |
| 3100-0349 | Driver side roof top compartment contents: (1) 12'-14'+ hard suction hose (not included) stored horizontal. Includes Nylatron compartment flooring. Length of capacity depends on body configuration. | 670 |
| 3100-0350 | Notch compartment L1 in forward ceiling area to allow for hose bed preconnect piping to route down into pump module. | 440 |
| 3100-0351 | Driver side body with full height 48" wide forward and 62" wide rearward compartmentation. Includes (1) 56" wide compartment over the wheel well. | 13325 |
| 3100-0352 | Stainless steel driver side body with full height 48" wide forward and 58" wide rearward enhanced extended compartmentation. Includes (1) 60" wide compartment over the wheel well. | 30726 |
| 3100-0354 | Driver side body with full height 54" wide forward and 48" wide rearward compartmentation. Includes (1) 56" wide compartment over the wheel well. Top Mount eMAX Only. | 13268 |
| 3100-0355 | (2) driver side roof top compartments with extra width to inboard side. Includes hinged raised compartment lids with turn latches grab handle(s) and gas shock hold open and drain line(s) ran to below body. Each lid to be wired to door ajar indicator in cab. | 5597 |

| Item No. | Description | |
|---|---|---|
| 3100-0357 | Driver 3/4 height side body with 20" wide and 42" wide forward compartments and 42" wide rearward compartment. Includes (1) 56" wide compartments over the wheel well. For use with custom chassis only. | 8643 |
| 3100-0358 | Driver side body with full height 42" wide forward and 56" wide rearward compartmentation. Includes (1) 56" wide compartment over the wheel well. | 13914 |
| 3100-0359 | Stainless steel driver side tanker body high side 52" front and 52" rear rescue style with Lord/coil spring torsion style body mounts. Four compartments tandem axle. | 22242 |
| 3100-0360 | Stainless steel driver side special tall body with full height 40" wide forward and 58" wide rearward enhanced extended compartmentation. Includes (1) 54" wide compartment over the wheel well. | 29617 |
| 3100-0361 | Stainless steel driver side body with full height/full depth 48" wide forward and 48" wide rearward compartmentation. Includes (1) 54" wide compartment over the wheel well. | 30269 |
| 3100-0362 | Driver side body with full height 50" wide forward and 36" wide rearward compartmentation. Includes (1) 56" wide compartment over the wheel well. Rear perimeter of body raised 4" for improved departure angle. | 12352 |
| 3100-0364 | Stainless steel driver side body with full height 40" wide forward and 58" wide rearward enhanced extended compartmentation. Includes (1) 60" wide compartment over the wheel well. | 29387 |
| 3100-0365 | Driver 3/4 side body with full height 24" wide forward and 36" wide rearward compartmentation. Includes (1) 56" wide compartment over the wheel well. | 5898 |
| 3100-0366 | (2) driver side roof top compartments. Includes hinged raised compartment lids with slam style D-ring latches and no grab handles. Each lid to have (1) bracket mounted LED light and to be wired to door ajar indicator in cab. | 3009 |
| 3100-0367 | Driver side body with upper and lower compartmentation. Includes 42" wide forward and 42" wide rearward lower compartments and (2) opening upper compartments. | 12027 |
| 3100-0368 | Driver side body with full height 26" and 30" wide forward compartments and 56" wide rearward compartmentation. Includes (1) 56" wide compartment over the wheel well. Side Mount eMAX only. | 15629 |
| 3100-0369 | Driver side body with full height 60" wide forward and 42" wide rearward compartmentation. Includes (1) 33" wide compartment over the wheel well and (1) Zico Overhead Portable Tank Rack. Rack to hold (1) 2100 gallon portable tank. | 19727 |
| 3100-0370 | Driver side body with full height 42" wide forward and 42" wide rearward compartmentation. Includes (1) 56" wide compartment over the wheel well. | 12133 |
| 3100-0371 | Stainless steel driver side body with full height 40" wide forward and 58" wide rearward extended compartmentation. Includes (1) 60" wide compartment over the wheel well | 29079 |
| 3100-0372 | Driver side smooth plate roof top compartment and paited black Durabak. Includes smooth plate vertically hinged access door at the rear with push button latch and painted job color to be wired to door ajar indicator in cab. | 2090 |
| 3100-0373 | (2) driver side roof top compartments with extra width to inboard side. Includes hinged raised compartment lids with turn latches grab handle(s) and gas shock hold open and drain line(s) ran to below body. Each lid to have (1) Amdor LED strip light and to be wired to door ajar indicator in cab. | 6555 |
| 3100-0374 | Driver side roof top compartment contents: (2) 6" x 10' hard suction hoses (not included) stored horizontal side by side. Includes stop bracket rearward of hard suction hoses and partition over the hard suction hoses. | 1142 |
| 3100-0375 | (2) driver side roof top compartments. Includes hinged raised compartment lids with turn latches and grab handle(s). Each lid to have (1) bracket mounted LED light and to be wired to door ajar indicator in cab. Includes fixed floor with hard suction storage below accessible through hinged rear panel access door with bent D-ring latch. | 3779 |
| 3100-0377 | Driver side body with full height 42" and 40" wide forward compartments and 56" wide rearward compartmentation. Includes (1) 56" wide compartment over the wheel well. Side Mount eMAX only. | 16192 |
| 3100-0379 | Driver Full height forward compartment and 3/4 side rear of L1 tandem body with 42" wide forward and 42" wide rearward compartmentation. Includes (2) 51.5" wide compartments over the wheel well. Lowered W/Well for extra compt heigth. Side Dump Valves between Tandems N/A. | 15118 |
| 3100-0380 | (2) driver side roof top compartments. Includes hinged raised compartment lids with turn latches and grab handle(s). Each lid to have (3) bracket mounted EON LED lights and to be wired to door ajar indicator in cab. | 2872 |
| 3100-0381 | Driver side tandem body with upper and lower compartmentation. Includes (2) 28" wide forward and 54" wide rearward compartments and (1) opening forward upper compartment with painted panels rearward. | 18300 |
| 3100-0383 | Stainless steel driver side short Boston style body with low height 30" front and 40" rear and (2) lift-up doors above. Includes 60" wide fender panel. For use with optional suicide hinged L1 door. | 27629 |

| Item No. | Description | |
|---|---|---|
| 3100-0384 | Driver side tandem body with upper and lower compartmentation. Includes 60" wide full height forward and 54" wide half height rearward compartments and (1) opening forward upper compartment with painted panels rearward. | 18305 |
| 3100-0386 | Driver side rear mount pumper body with full height 48" wide forward and 60" wide rearward compartmentation. Includes (1) 56" wide compartment over the wheel well and one (1) storage tunnel and access door at rear. | 18416 |
| 3100-0387 | Driver side body with full height 60" wide forward and 48" wide rearward compartmentation. Includes (1) 56" wide compartment over the wheel well. Side Mount eMAX only. | 14154 |
| 3100-0389 | Driver side body with full height 34" and 48" wide forward compartments and 56" wide rearward compartmentation. Includes (1) 56" wide compartment over the wheel well. Side Mount eMAX only. | 16192 |
| 3100-0390 | Driver side body with full height 30" wide forward and 44" wide rearward compartmentation. Includes (1) 56" wide compartment over the wheel well. | 11760 |
| 3100-0391 | Stainless steel driver side body with full height/full depth 60" wide forward and 60" wide rearward compartmentation. Includes (1) 60" wide compartment over the wheel well. | 32743 |
| 3100-0394 | Driver side rear mount rescue pumper body with full height 38" wide forward and 42" wide rearward compartmentation. Includes (1) 56" wide compartment over the wheel well and 30 degree angled rear body for improved angle of departure. | 13311 |
| 3100-0395 | Driver full height body side with (1) 48" wide Full Height forward compartment (1) 30" wide lower forward compartment adjacent to w/well (2) upper compartments (57" wide each) the rearward upper having a rear compartment face access door for portable tank storage and (1) lower rearward compartment (24") to rear of the w/well. | 12246 |
| 3100-0396 | Stainless steel driver side body with full height 54" wide forward and 48" wide rearward compartmentation. Includes (1) 60" wide compartment over the wheel well. | 32692 |
| 3100-0398 | (2) side low profile stepped interior roof top compartments with extra width to inboard side. Includes hinged raised compartment lids with turn latchesgas shock hold opens and drain line(s) ran to below body. Each lid to have (1) bracket mounted LED light and to be wired to door ajar indicator in cab. Lids shall be without grab handles for lowered OAH and shall have a stepped interior. | 5857 |
| 3100-0399 | Driver half side body with 42" wide forward and 56" wide rearward extended compartmentation. For use with a drop down ladder rack. | 6442 |
| 3100-0400 | Driver side body with upper and lower compartmentation. Includes 42" wide forward and 36" wide rearward lower compartments and (3) opening upper compartments. | 11912 |
| 3100-0401 | Driver side rear mount rescue pumper body with full height 62" wide forward and 42" wide rearward compartmentation. Includes (1) 56" wide compartment over the wheel well and 30 degree angled rear body for improved angle of departure. | 15474 |
| 3100-0402 | Driver side diamond plate roof top compartment. Includes smooth plate painted vertical hinged access door at the rear with D-Ring latch to be wired to door ajar indicator in cab. | 1699 |
| 3100-0404 | Stainless steel driver side body with full height 40" wide forward and 40" wide rearward compartmentation. Includes (1) 60" wide compartment over the wheel well. | 29094 |
| 3100-0405 | Driver side body with full height 30" wide forward and 60" wide rearward extended compartmentation. Includes (1) 56" wide compartment over the wheel well. | 12069 |
| 3100-0406 | Stainless steel driver side body with full height 30" front 40" rear and 60" wide fender panel L2 compartment. | 27686 |
| 3100-0407 | Driver side body with full height 36" wide forward and 56" wide rearward compartmentation. Includes (1) 56" wide compartment over the wheel well. For use on low hosebed body and individual compartments on the driver side. | 14717 |
| 3100-0408 | L1 floor to have a cut-out rearward and near back wall for a recessed box as applicable to allow for 6000 psi DOT bottle to be located without interference. | 554 |
| 3100-0409 | (2) driver side roof top compartments. Includes hinged raised compartment lids with turn latches and grab handle(s). Each lid to have (1) bracket mounted ROM V4 LED strip light and to be wired to door ajar indicator in cab. | 3262 |
| 3100-0410 | Driver side body with full height 34" and 30" wide forward compartments and 56" wide rearward compartmentation. Includes (1) 56" wide compartment over the wheel well. Side Mount eMAX | 16231 |
| 3100-0411 | Driver full height side body with (3) full height rescue style forward compartments (48" and 30" wide) and (1) rearward compartment (24" wide) (1) upper compartment (56" wide). | 10218 |
| 3100-0412 | Driver side body with full height 42 in. wide forward and 56 in. wide rearward enhanced extended compartmentation. Includes (1) 56 in. wide compartment over the wheel well. L1 compartment to be Rescue Pumper style full depth compartment. | 14454 |
| 3100-0414 | Stainless steel driver side body with full height 48" wide forward and 48" wide rearward compartmentation. Includes (1) 60" wide compartment over the wheel well. | 35104 |
| 3100-0415 | (2) driver side roof top compartments. Includes hinged raised compartment lids with turn latches and grab handle(s). Each lid to have (1) bracket mounted ROM V4 LED strip light and to be wired to door ajar indicator in cab. | 3262 |
| 3100-0416 | Driver side body with full height 42in. wide forward and 62in. wide rearward enhanced extended compartmentation. Includes (1) 56in. wide compartment over the wheel well and one (1) storage tunnel. | 17241 |

| Item No. | Description | |
|---|---|---|
| 3100-0419 | Driver side body with full height 60" wide forward and 56" wide rearward compartmentation. Includes (1) 56" wide compartment over the wheel well. Rear perimeter or body raised 3" for improved departure angle. Side Mount eMAX only. | 14154 |
| 3100-0420 | Drivers full height side body with 20" wide and 42" wide forward compartments and 42" wide rearward compartment. Includes (1) 56" wide compartments over the wheel well. For use with 30 high lower compt height only. | 10738 |
| 3100-0421 | Driver side body with full height 44" wide forward and 36" wide rearward compartmentation and 60.75" opening. Includes (1) 56" wide compartment over the wheel well and 28.75" opening . | 13274 |
| 3100-0423 | Driver side body with full height 36" wide forward and 50" wide rearward compartmentation. Includes (1) 56" wide compartment over the wheel well. Rescue Pumper individual style compartments. | 12706 |
| 3100-0425 | (2) driver side roof top compartments with extra width to inboard side. Includes hinged raised compartment lids with turn latches grab handle(s) and gas shock hold open and drain line(s) ran to below body. Each lid to have (1) bracket mounted ROM V4 LED strip light and to be wired to door ajar indicator in cab. | 6130 |
| 3100-0426 | Driver side body with full height 60" wide forward and 56" wide rearward compartmentation. Includes (1) 56" wide compartment over the wheel well and one (1) storage tunnel located behind the upper (3) compartment back walls. Top Mount eMAX Only. | 17219 |
| 3100-0427 | Driver 3/4 side tandem body with 3/4 full height 42" wide forward (2) 3/4 compartments over the wheel well the forward 41.5" wide rearward to be 61.5" wide and a 3/4 full height 42" wide rearward compartment. Additionally there shall be a 3/4 full height 20" wide beavertail compartment. | 11015 |
| 3100-0428 | Drivers full height side body (FOR 4X4 Chassis) with 30" high lower compartment height (2) lower forward compartments (34" and 28" wide) ahead of wheel well (1) one lower rearward compartment 24" wide and (3) upper compartments (48.67" wide x 32" high opening) each transverse front to rear. | 10218 |
| 3100-0429 | Driver side standard width roof top compartment contents: (2) 6" x 12' hard suction hoses (not included) stored vertical. The hard suction storage shall have a front wall which will prevent the hoses from sliding too far forward while also creating a full depth coffin storage area forward of the wall if applicable. | 363 |
| 3100-0430 | (2) driver side roof top compartments. Includes hinged raised compartment lids with turn latches and grab handle(s). Each lid to have (1) Amdor LED strip light and to be wired to door ajar indicator in cab. | 3689 |
| 3100-0431 | Driver side tandem body with full height 48" wide forward and 48" wide rearward compartmentation. Includes (2) 51.5" wide compartments over the wheel well. | 15225 |
| 3100-0432 | Stainless steel driver 3/4 side body with 40" wide forward and 58" wide rearward compartmentation rear for flat back body design. Includes (1) 60" wide compartment over the wheel well. | 25175 |
| 3100-0433 | Driver side body with upper and lower compartmentation. Includes 30" wide forward and 50" wide rearward lower compartments and (3) opening upper compartments. | 11760 |
| 3100-0434 | 2-arm ladder rack on driver side. The ladder rack includes amber lights on each end to visually indicate when the rack is in motion. Restricts the top folding step (if optioned) from closing completely. Mounting bracket for lights not required. | 12989 |
| 3100-0435 | Driver side body with full height 26" and 50" wide forward compts 56" wide over wheel compt and 52" wide rearward compt. Includes slide-back rear side compt for engine access. HS only. | 26877 |
| 3100-0436 | Stainless steel driver side body with rescue style full height 35" front 40" rear and 60" wide fender panel L2 compartment. | 30077 |
| 3100-0437 | Driver side body with full height 60" wide forward and 52" wide rearward compartmentation. Includes (1) 56" wide compartment over the wheel well. Includes slide-back rear side compt for engine access. HS only. | 25456 |
| 3100-0438 | Driver side rear mount rescue pumper body with full height 24" wide forward and 42" wide rearward compartmentation. Includes (1) 56" wide compartment over the wheel well and 30 degree angled rear body for improved angle of departure. | 12229 |
| 3100-0439 | Driver full height side body with (2) full height rescue style forward compartments (48" and 30" wide) (2) upper compartment (42" wide) and (1) lower rearward compartment (28"). | 10303 |
| 3100-0444 | Driver side body with upper and lower compartmentation. Includes full height 24" wide forward 30" high by 38" wide lower rear and 34" high by 38" wide upper rear compartmentation. Includes (1) 56" wide compartment over the wheel well. | 10397 |
| 3100-0445 | Stainless steel driver side body with full height/full depth 54" wide forward and 54" wide rearward compartmentation. Includes (1) 60" wide compartment over the wheel well. | 31494 |
| 3100-0446 | Driver side body with full height 30" wide forward and 52" wide rearward extended compartmentation. Includes (1) 56" wide compartment over the wheel well. | 11760 |
| 3100-0447 | Driver full height side body with 66" wide forward and 42" wide rearward compartmentation. Includes (1) 56" wide compartment over the wheel well. The compartment opening height to be 30" IPO 34". For use with custom chassis only. | 10504 |
| 3100-0449 | Stainless steel driver side body with full height 48" wide front and 58" rear with reduced upper depth for "T" tank. Includes 60" wide compartment over rear wheels. Upper compartments to be 15" deep. | 29979 |

| Item No. | Description | |
|---|---|---|
| 3100-0450 | Stainless steel driver side short Boston style body with low height 48" front and 40" rear and (3) lift-up doors above. Includes 60" wide fender panel. | 29881 |
| 3100-0452 | Driver side tandem body with full height 60" wide forward and 54" wide rearward compartmentation. Includes (2) 51.5" wide compartments over the wheel well. Wheel wells and lower compartment height to lowered 4" over standard (Pumper/Rescue Pumper Height). | 16057 |
| 3100-0455 | Driver side rear mount pumper body with two full height 48" wide forward compartments and 42" wide rearward compartment. Includes (1) 56" wide compartment over the wheel well and 30 degree angled rear body for improved angle of departure. | 19342 |
| 3100-0456 | Driver side tandem body with 48" wide forward and 42" wide rearward compartmentation. Forward compartment to be full height rearward to be half height. | 11661 |
| 3100-0457 | Driver side body with full height 30" wide forward and 50" wide rearward compartmentation. Includes (1) 56" wide compartment over the wheel well. | 11055 |
| 3100-0458 | Driver side body with full height 42" wide forward and 42" wide rearward compartmentation. Includes (1) 56" wide compartment over the wheel well. | 11555 |
| 3100-0460 | Stainless steel driver side body with full height 30" wide forward and 58" wide rearward extended compartmentation. Includes (1) 60" wide compartment over the wheel well | 29079 |
| 3100-0461 | Driver side body with full height/full depth 60" wide front and 54" wide rear compartment. Includes (1) 60" wide compartment over the wheel well. Includes notch in upper rear compartment walls to provide for a level hose bed. Side mount SS eMAX only. | 17512 |
| 3100-0462 | Driver side body with full height 60" wide forward and 42" wide rearward compartments. Includes (1) 56" wide compartment over the wheel well. Side Mount e-MAX only. | 13268 |
| 3100-0463 | Driver full height side body with 31" wide and 31" wide forward compartments and 42" wide rearward compartment. Includes (1) 56" wide compartments over the wheel well. | 10738 |
| 3100-0467 | Roof top compartment contents: (1) 6in x 10ft hard suction hose (not included) stored in the lower area of roof top compartment. Includes stop bracket rear ward of hard suction hose if applicable to body length and partition surround over the hard suction hoses to accommodate storage area above and in front of the stored hose. Floor to include nylon pad as applicable for ease of deployment on scene. | 736 |
| 3100-0468 | Rear aluminum smooth plate painted job color vertical hinged door on roof top compartment. Includes D-ring latch and wiring for door ajar switch. | 233 |
| 3100-0471 | Stainless steel driver side body with full height 48" wide forward and 54" wide rearward compartmentation. Includes (1) 60" wide compartment over the wheel well. | 30578 |
| 3100-0472 | Driver side body with full height 30 and 60" wide front and 54" wide rear compartments. Includes (1) 60" wide compartment over the wheel well and one (1) storage tunnel located behind reduced upper depth compartments. SS eMAX only. | 22760 |
| 3100-0473 | (2) driver side roof top compartments. Includes hinged raised compartment lids with turn latches and grab handle(s). Each lid to include LED light (per specifications) and to be wired to door ajar indicator in cab. | 2655 |
| 3100-0474 | Driver side body with full height 36" wide forward and 50" wide rearward enhanced extended compartmentation. Includes (1) 56" wide compartment over the wheel well. | 12502 |
| 3100-0475 | Driver side body with upper and lower compartmentation. Includes 42" wide forward and 56" wide rearward lower compartments and (3) opening upper compartments. | 13274 |
| 3100-0476 | Driver side diamond plate roof top compartment. Includes smooth plate painted vertical hinged access door at the rear with D-ring style latch to be wired to door ajar indicator in cab. | 1672 |
| 3100-0477 | Stainless steel driver side body with full height 30" wide forward and 46" wide rearward compartmentation having Lord/coil spring torsion style body mounts. Includes a 60" wide compartment over the wheel well. Custom height in lower L3 for a special ALS shelving unit. | 27347 |
| 3100-0479 | Stainless steel 96" wide driver side body with full height full depth 48" wide forward and 48" wide rearward compartmentation. Includes (1) 54" wide compartment over the wheel well. | 30810 |
| 3100-0480 | Driver side body with full height 30" wide forward and 52" wide rearward enhanced extended compartmentation. Includes (1) 56" wide compartment over the wheel well. | 11760 |
| 3100-0483 | Stainless steel driver side body with full height/full depth 36" wide front compartment and reduced depth upper 48" rearward compartmentation. Includes 60" wide compartment above rear wheels. | 30172 |
| 3100-0484 | Stainless steel driver side body with full height 44" wide forward and 60" wide rearward compartmentation. Includes (1) 54" wide compartment over the wheel well. | 32439 |
| 3100-0485 | Driver side body with full height 34" and 56" wide forward compartments and 56" wide rearward compartmentation. Includes (1) 56" wide compartment over the wheel well. Side Mount eMAX only. | 16274 |
| 3100-0486 | Driver side tandem body with full height 54" wide forward and 48" wide rearward compartmentation. Includes (2) 51.5" wide compartments over the wheel well. Includes 30" high lower compartment height "Pumper Style" ilo 34" high. Side Dumps between or adjacent to Tandems are not available. | 16057 |
| 3100-0487 | Stainless steel driver side body with full height full depth 48" wide forward and 58" wide rearward enhanced extended compartmentation. Includes (1) 60" wide compartment over the wheel well. Compartment height to be 78". | 31225 |

| Item No. | Description | |
|---|---|---|
| 3100-0488 | 2-arm ladder rack on driver side. The ladder rack includes amber lights on each end to visually indicate when the rack is in motion. Restricts the top folding step (if optioned) from closing completely. Includes mounting bracket (if required matching rear compartment face or compartment wrap finish) for components mounted on rear compartment face. | 12989 |
| 3100-0489 | Stainless steel driver side body with full height 30" wide forward and 46" wide rearward compartmentation having Lord/coil spring torsion style body mounts. Includes a 66" wide compartment over the wheel well. Custom height in lower L3 for a special ALS shelving unit. | 27347 |
| 3100-0490 | Driver side body with full height 60" wide forward and 46" wide rearward compartmentation. Includes (1) 56" wide compartment over the wheel well. Top Mount eMAX Only. | 13522 |
| 3100-0491 | Driver side body with full height 36" wide forward and 56" wide rearward enhanced extended compartmentation. Includes (1) 56" wide compartment over the wheel well. | 12112 |
| 3100-0492 | Driver half side body with 36" wide forward and 50" wide rearward enhanced extended compartmentation. Includes adjustable ladder tracks. | 6363 |
| 3100-0493 | Stainless steel driver side body with full height 48" wide front and 48" wide rear compartments. Includes 60" wide compartment over rear wheels. | 29558 |
| 3100-0494 | Stainless steel driver side body with full height/full depth 40" wide forward and 58" wide rearward extended compartment. Includes (1) 60" wide compartment over the wheel well. | 29079 |
| 3100-0495 | Driver side tandem body with two forward compartments ahead of the rear wheels and one rear compartment behind rear wheels. The forward front compartment to be 38" wide and full height the rearward front compartment to be 24" wide and half height. The single rear to be a half height 60" wide compartment. | 16057 |
| 3100-0496 | Stainless steel driver side body with full height 35" wide forward and 48" wide rearward compartmentation. Includes (1) 60" wide compartment over the wheel well. | 30077 |
| 3100-0497 | Rear aluminum smooth plate painted job color vertical hinged door on driver side roof top compartments. Includes D-Ring latch and wiring for door ajar switch. | 279 |
| 3100-0498 | Driver side roof top compartment contents: (1) 6" x 10' hard suction hose (not included) stored in lower rearward area of the roof top storage with Nylatron compartment flooring. Includes surround forward and above hard suction hose to allow for additional storage in remaining available roof top storage compartments accessible from top lift doors. | 755 |
| 3100-0499 | Driver side tandem body with full height 66" wide forward and 60" wide rearward compartmentation. Includes (2) 51.5" wide compartments over the wheel well. | 17709 |
| 3100-0500 | Driver side body with upper and lower compartmentation. Includes 42" wide forward and 48" wide rearward lower compartments and (3) opening upper compartments. | 12431 |
| 3100-0505 | Driver side body with full height 42" wide forward and 56" wide rearward enhanced extended compartmentation. Includes (1) 56" wide compartment over the wheel well and one (1) storage tunnel. | 16376 |
| 3100-0506 | Driver side body with full height 35" wide forward and 47" wide rearward compartmentation. Includes (1) 56" wide compartment over the wheel well. | 14217 |
| 3100-0507 | (3) driver side roof top compartments with extra width to inboard side (43"/43"/43"). Includes hinged raised compartment lids with thumb latches grab handle(s) and gas shock hold open and drain line(s) ran to below body. Each lid to have (1) bracket mounted LED light and to be wired to door ajar indicator in cab. | 6712 |
| 3100-0508 | Driver side body with full height 42" wide forward and 56" wide rearward enhanced extended compartmentation. Includes (1) 56" wide compartment over the wheel well. | 12518 |
| 3100-0511 | Stainless steel driver side body with full height full depth 48" wide forward and 48" wide rearward compartmentation. Includes (1) 60" wide compartment over the wheel well. | 30301 |
| 3100-0512 | Vertical partition located in driver side roof top compartment at rear access door. Partition is to be full height of compartment and 61" long capped of at the end to create a boxed in area for separate storage. | 507 |
| 3100-0513 | Driver half side tandem body with (1) 44" wide first forward (1) 30" wide second forward and (1) 66" wide rearward compartments. Compartment height openings to be 30" IPO standard 34". | 12783 |
| 3100-0514 | Driver side body with full height 40" wide forward and 56" wide rearward compartmentation. Includes (1) 56" wide compartment over the wheel well. | 13227 |
| 3100-0516 | Driver side body with full height 42" wide forward and 56" wide rearward enhanced extended compartmentation. Includes (1) 56" wide compartment over the wheel well. | 12518 |
| 3100-0517 | Compartment L1 to be notched for vertical exhaust in back forward corner of the compartment. | 303 |
| 3100-0518 | (2) side roof top compartments with extra width to inboard side. Includes hinged raised compartment lids with D-ring slam style latch (s) and no grab handles for reduced OAH impact with gas shock hold open(s) and drain line(s) ran to below body. Each lid to have (1) bracket mounted LED light and to be wired to door ajar indicator in cab. | 5739 |
| 3100-0519 | Driver side body with full height 36" wide forward and 56" wide rearward compartmentation. Includes (1) 56" wide compartment over the wheel well. | 12466 |
| 3100-0521 | Driver side body with upper and lower compartmentation. Includes 24" wide forward and 36" wide rearward lower compartments and (2) opening upper compartments. For use with 94"(96" with rubrail) wide body configuration. | 9906 |

| Item No. | Description | |
|---|---|---|
| 3100-0525 | Driver side body with full height 42" wide forward and 56" wide rearward extended compartmentation. Includes (1) 56" wide compartment over the wheel well. | 13311 |
| 3105-0002 | Rear Mount forward body. Includes main side body structures and compartment L1/R1 L2/R2. | 16316 |
| 3105-0005 | Hosebed walkway. Includes forward body headboard mod and rear body module walkway end partition. Walkway to be a slip resistant material. Walkway located to [#LOC] of the hosebed. | 2021 |
| 3105-0006 | Rear Mount forward body compartments. Includes L1/R1 54" wide x 26" deep in the 56" lower area and 12" deep in the 12" upper area L2/R2 56" wide x 26" deep in the 22" lower area and 12" deep in the 12" upper area. | 1616 |
| 3105-0008 | Rear Mount forward body. Includes main side body structures and compartment L1/R1 L2/R2 and a Zico overhead ladder rack (control located officer rear body/pump module). | 25979 |
| 3105-0009 | Rear Mount forward body compartments with driver side storage tunnel. Includes L1 - 72" wide x 26" deep in the 30" lower area and 12" deep in the 34" upper area L2 - 56" wide x 12" deep R1 - 72" wide x 26" deep in the 56" lower area and 12" deep in the 12" upper area R2 - 56" wide x 26" deep in the 22" lower area and 12" deep in the 12" upper area. | 4763 |
| 3105-0010 | Rear Mount forward body. Includes main side body structures and compartment LT/RT L1/R1 L2/R2. LT/RT (full width and 95" high) with lower storage areas (compartment opening 67" wide and same height as main body compartments). Includes full width forward storage pan and a pan in the rearward center/officer area between the driver roof top compartment. Transverse floor to run full width. Rear headboard to have area for routing of plumbing for preconnects located in rearward area. Area above preconnects (forward area) to be for storage of a stokes basket. L1/R1 54" wide x 26" deep in the 56" lower area and 12" deep in the 12" upper area L2/R2 56" wide x 26" deep in the 22" lower area and 12" deep in the 12" upper area. | 33236 |
| 3105-0011 | Rear Mount forward body compartments with driver side storage tunnel. Includes L1 - 54" wide x 26" deep in the 30" lower area and 12" deep in the 38" upper area L2 - 56" wide x 12" deep. R1 - 54" wide x 26" deep in the 56" lower area and 12" deep in the 12" upper area R2 - 56" wide x 26" deep in the 22" lower area and 12" deep in the 12" upper area. | 1616 |
| 3105-0014 | Rear Mount forward body compartments. Includes L1/R1 - 60" wide x 26" deep in the 56" lower area and 12" deep in the 12" upper area L2/R2 - 56" wide x 26" deep in the 22" lower area and 12" deep in the 12" upper area. | 2666 |
| 3105-0015 | Rear Mount forward body compartments. Includes L1/R1 - 66" wide x 26" deep in the 56" lower area and 12" deep in the 12" upper area L2/R2 - 56" wide x 26" deep in the 22" lower area and 12" deep in the 12" upper area. | 3716 |
| 3105-0016 | Rear Mount forward body compartments. Includes L1/R1 - 72" wide x 26" deep in the 56" lower area and 12" deep in the 12" upper area L2/R2 - 56" wide x 26" deep in the 22" lower area and 12" deep in the 12" upper area. | 4763 |
| 3105-0017 | Rear Mount forward body compartments with officer side Zico Overhead Ladder Rack. Includes L1/R1 - 54" wide x 26" deep in the 56" lower area and 12" deep in the 12" upper area L2 - 56" wide x 26" deep in the 22" lower area and 12" deep in the 12" upper area R2 - 33" wide x 26" deep in the 22" lower area and 12" deep in the 12" upper area (position of R2 depends on position of overhead ladder rack). | 1616 |
| 3105-0018 | Rear Mount forward body compartments with officer side Zico Overhead Ladder Rack. Includes L1/R1 - 60" wide x 26" deep in the 56" lower area and 12" deep in the 12" upper area L2 - 56" wide x 26" deep in the 22" lower area and 12" deep in the 12" upper area R2 - 33" wide x 26" deep in the 22" lower area and 12" deep in the 12" upper area (position of R2 depends on position of overhead ladder rack). | 2666 |
| 3105-0019 | Rear Mount forward body compartments with officer side Zico Overhead Ladder Rack. Includes L1/R1 - 66" wide x 26" deep in the 56" lower area and 12" deep in the 12" upper area L2 - 56" wide x 26" deep in the 22" lower area and 12" deep in the 12" upper area R2 - 33" wide x 26" deep in the 22" lower area and 12" deep in the 12" upper area (position of R2 depends on position of overhead ladder rack). | 3716 |
| 3105-0020 | Rear Mount forward body compartments with officer side Zico Overhead Ladder Rack. Includes L1/R1 - 72" wide x 26" deep in the 56" lower area and 12" deep in the 12" upper area L2 - 56" wide x 26" deep in the 22" lower area and 12" deep in the 12" upper area R2 - 33" wide x 26" deep in the 22" lower area and 12" deep in the 12" upper area (position of R2 depends on position of overhead ladder rack). | 4763 |
| 3105-0022 | Rear Mount forward body compartments with driver side storage tunnel. Includes L1 - 60" wide x 26" deep in the 30" lower area and 12" deep in the 38" upper area L2 - 56" wide x 12" deep. R1 - 60" wide x 26" deep in the 56" lower area and 12" deep in the 12" upper area R2 - 56" wide x 26" deep in the 22" lower area and 12" deep in the 12" upper area. | 2666 |
| 3105-0023 | Rear Mount forward body compartments with driver side storage tunnel. Includes L1 - 66" wide x 26" deep in the 30" lower area and 12" deep in the 38" upper area L2 - 56" wide x 12" deep. R1 - 66" wide x 26" deep in the 56" lower area and 12" deep in the 12" upper area R2 - 56" wide x 26" deep in the 22" lower area and 12" deep in the 12" upper area. | 3716 |

| Item No. | Description | |
|---|---|---|
| 3105-0025 | Rear Mount forward body compartments with officer side storage tunnel. Includes L1 - 54" wide x 26" deep in the 56" lower area and 12" deep in the 12" upper area L2 - 56" wide x 26" deep in the 22" lower area and 12" deep in the 12" upper area. R1 - 54" wide x 26" deep in the 30" lower area and 12" deep in the 38" upper area R2 - 56" wide x 12" deep. | 1616 |
| 3105-0026 | Rear Mount forward body compartments with officer side storage tunnel. Includes L1 - 60" wide x 26" deep in the 56" lower area and 12" deep in the 12" upper area L2 - 56" wide x 26" deep in the 22" lower area and 12" deep in the 12" upper area. R1 - 60" wide x 26" deep in the 30" lower area and 12" deep in the 38" upper area R2 - 56" wide x 12" deep. | 2666 |
| 3105-0027 | Rear Mount forward body compartments with officer side storage tunnel. Includes L1 - 66" wide x 26" deep in the 56" lower area and 12" deep in the 12" upper area L2 - 56" wide x 26" deep in the 22" lower area and 12" deep in the 12" upper area. R1 - 66" wide x 26" deep in the 30" lower area and 12" deep in the 38" upper area R2 - 56" wide x 12" deep. | 3716 |
| 3105-0028 | Rear Mount forward body compartments with officer side storage tunnel. Includes L1 - 72" wide x 26" deep in the 56" lower area and 12" deep in the 12" upper area L2 - 56" wide x 26" deep in the 22" lower area and 12" deep in the 12" upper area. R1 - 72" wide x 26" deep in the 30" lower area and 12" deep in the 38" upper area R2 - 56" wide x 12" deep. | 4763 |
| 3105-0034 | Rear Mount forward body. Includes main side body structures and compartment L1/R1 L2/R2 and (1) storage tunnel. | 22597 |
| 3105-0036 | Rear Mount forward body. Includes main side body structures and compartment LT/RT L1/R1 L2/R2. LT/RT (full width and 95" high) with lower storage areas (compartment opening 67" wide and same height as main body compartments). Includes full width storage pan. Transverse floor to run full width. Rear headboard to have area for routing of plumbing for preconnects located in rearward area. The speedlay area to be stacked style and offset to rearward area of the transverse compartment. The upper speedlay area to hold (2) speedlay trays: (1) to hold - 200' of 2.5" DJ hose and (1) dry lay to hold - 100' of 1.75" DJ hose and 100' of 2.5" DJ hose. The lower speedlay area to hold (3) speedlay trays: (2) to hold 200' of 1.75" DJ hose each and (1) to hold 100' of 1.75" DJ hose. L1/R1 54" wide x 26" deep in the 56" lower area and 12" deep in the 12" upper area L2/R2 56" wide x 26" deep in the 22" lower area and 12" deep in the 12" upper area. | 33236 |
| 3105-0037 | Transverse module (full width and height of the body) located forward of the body. Includes single 30" wide compartment opening per side (with a shallow lower area and a transverse upper area with full width smooth plate flooring). Upper area of transverse module to have diamond plate dunnage pan. | 12143 |
| 3105-0038 | Transverse module (full width and height of the body) located forward of the body. Includes single 36" wide compartment opening per side (with a shallow lower area and a transverse upper area with full width smooth plate flooring). Upper area of transverse module to have diamond plate dunnage pan. | 13758 |
| 3105-0039 | Transverse module (full width and height of the body) located forward of the body. Includes single 42" wide compartment opening per side (with a shallow lower area and a transverse upper area with full width smooth plate flooring). Upper area of transverse module to have diamond plate dunnage pan. | 15373 |
| 3105-0040 | Transverse module (full width and height of the body) located forward of the body. Includes single 50" wide compartment opening per side (with a shallow lower area and a transverse upper area with smooth plate flooring). Rearward transverse compartment area to have double preconnects with removable trays (side by side) and backboard storage (rearward of preconnects with velcro straps). Upper area of transverse module to have diamond plate dunnage pan. | 13564 |
| 3105-0041 | Transverse module (full width and height of the body) located forward of the body. Includes single 56" wide compartment opening per side (with a shallow lower area and a transverse upper area with smooth plate flooring). Rearward transverse compartment area to have double preconnects with removable trays (side by side) and backboard storage (rearward of preconnects with velcro straps). Upper area of transverse module to have diamond plate dunnage pan. | 15179 |
| 3105-0042 | Transverse module (full width and height of the body) located forward of the body. Includes single 62" wide compartment opening per side (with a shallow lower area and a transverse upper area with smooth plate flooring). Rearward transverse compartment area to have double preconnects with removable trays (side by side) and backboard storage (rearward of preconnects with velcro straps). Upper area of transverse module to have diamond plate dunnage pan. | 16794 |
| 3105-0043 | Transverse module (full width and height of the body) located forward of the body. Includes single 50" wide compartment opening per side (with a shallow lower area and a transverse upper area with smooth plate flooring). Rearward transverse compartment area to have triple preconnects with removable trays (side by side). Upper area of transverse module to have diamond plate dunnage pan. | 14037 |
| 3105-0044 | Transverse module (full width and height of the body) located forward of the body. Includes single 56" wide compartment opening per side (with a shallow lower area and a transverse upper area with smooth plate flooring). Rearward transverse compartment area to have triple preconnects with removable trays (side by side). Upper area of transverse module to have diamond plate dunnage pan. | 15652 |

| Item No. | Description | |
|---|---|---|
| 3105-0045 | Transverse module (full width and height of the body) located forward of the body. Includes single 62" wide compartment opening per side (with a shallow lower area and a transverse upper area with smooth plate flooring). Rearward transverse compartment area to have triple preconnects with removable trays (side by side). Upper area of transverse module to have diamond plate dunnage pan. | 17267 |
| 3105-0046 | Transverse module (full width and height of the body) located forward of the body. Includes single 50" wide compartment opening per side (with a shallow lower area and a transverse upper area with smooth plate flooring). Rearward transverse compartment area to have double preconnects with removable trays (stacked). Upper area of transverse module to have diamond plate dunnage pan. | 13884 |
| 3105-0047 | Transverse module (full width and height of the body) located forward of the body. Includes single 56" wide compartment opening per side (with a shallow lower area and a transverse upper area with smooth plate flooring). Rearward transverse compartment area to have double preconnects with removable trays (stacked). Upper area of transverse module to have diamond plate dunnage pan. | 15498 |
| 3105-0048 | Transverse module (full width and height of the body) located forward of the body. Includes single 62" wide compartment opening per side (with a shallow lower area and a transverse upper area with smooth plate flooring). Rearward transverse compartment area to have double preconnects with removable trays (stacked). Upper area of transverse module to have diamond plate dunnage pan. | 17113 |
| 3105-0049 | Preconnect module (stacked) for use with aluminum speedlay trays. Includes area for (2) stacked preconnect lower storage compartments with push button latches running boards and upper area dunnage pan. | 12143 |
| 3105-0051 | Preconnect module to be capable of holding the following contents: Upper preconnect area to hold (1) 400' of 1.75" DJ with removable tray. Lower preconnect area to hold (1) 400' of 1.75" DJ with removable tray. | 949 |
| 3105-0052 | Preconnect module to be capable of holding the following contents: Upper preconnect area to hold (2) 200' of 1.75" DJ with removable trays. Lower preconnect area to hold 200' of 2.5" DJ with removable tray. | 1422 |
| 3105-0053 | Preconnect module to be capable of holding the following contents: Upper preconnect area to hold (2) 200' of 1.75" DJ with removable trays. Lower preconnect area to hold (2) 200' of 1.75" DJ with removable trays. | 1896 |
| 3105-0054 | Rear Mount forward body. Includes main side body structures and compartment L1/R1 L2/R2. | 21511 |
| 3105-0056 | Preconnect module (stacked). Includes area for (2) stacked preconnect lower storage compartments with push button latches running boards upper area dunnage pan and horizontal backboard storage with drop down diamond plate access door (wired to door ajar). | 8984 |
| 3105-0057 | Preconnect/Transverse module (full width and height of body). Includes (2) full width stacked speedlays (make standard size opening as used on normal width speedlay module). Each speedlay to be plumbed for use with 1.75" DJ hose. Area directly behind speedlays to have a transverse compartment (opening height to match body compartments). Transverse to include full width floor. Upper area to include a full width storage pan (forward of roof top compartments) and (1) pan located between the roof top compartments. Make pans as deep as practical. | 11386 |
| 3105-0058 | Transverse module (full width and height of the body) located forward of the body. Includes single 30" wide compartment opening per side (with a shallow lower area and a transverse upper area with smooth plate flooring). Lower transverse compartment area to have triple preconnects with removable trays (side by side). Above the speedlay area to be storage for stokes basket. Upper area of transverse module to have diamond plate dunnage pan. | 12760 |
| 3105-0059 | The outboard panels of the full width transverse module to be smooth plate overlays. These areas are to be seamless and painted job color. | 332 |
| 3105-0060 | Transverse module (full width and height of the body) located forward of the body. Includes single 30" wide compartment opening per side (with a shallow lower area and a transverse upper area with smooth plate flooring). Rearward transverse compartment area to have triple preconnects with removable trays (stacked (2) 1.5" on top and (1) 2.5" on bottom). Upper area of transverse module to have diamond plate dunnage pan. | 14037 |
| 3105-0061 | Backboard storage sleeve with retaining strap. Located in LT/RT compartment forward of the speedlays to be 5" wide x 20" high. | 1031 |
| 3105-0062 | Rear Mount body. Includes main side body structures and compartments L1/R1 L2/R2 L3/R3 and L4/R4. Includes interior compartment offset for pump panel location and mounting rear body structure for rear mounted pump application. | 39759 |
| 3105-0066 | Rear Mount forward body compartments. Includes L1/R1 - 72" wide x 26" deep in the 56" lower area and 12" deep in the 12" upper area L2/R2 - 56" wide x 26" deep in the 22" lower area and 12" deep in the 12" upper area. An externally-mounted compartment top shall be provided and constructed of a 1/8" (.125") aluminum smooth plate with black Scorpion coating (IPOS diamond plate). | 5129 |

| Item No. | Description | |
|---|---|---|
| 3105-0067 | Transverse module (full width and height of the body) located forward of the body. Includes single 30" wide compartment opening per side (with a shallow lower area and a transverse upper area with smooth plate flooring). Rearward transverse compartment area to have triple preconnects with removable trays (stacked (2) 1.5" on top and (1) 2.5" on bottom). Upper area of transverse module to have a dunnage pan made of aluminum smooth plate with black Scorpion coating (IPOS diamond plate). The running boards shall be constructed of aluminum smooth plate with black Scorpion coating (IPOS diamond plate) | 14676 |
| 3105-0068 | Preconnect module to be capable of holding the following contents: Upper preconnect area to hold (2) 200' of 1.75" DJ with removable poly trays. Lower preconnect area to hold 200' of 2.5" DJ with removable poly tray. | 1422 |
| 3105-0069 | Preconnect module (stacked)for use with Poly trays. Includes area for (2) stacked preconnect lower storage compartments with push button latches running boards and upper area dunnage pan. | 12649 |
| 3105-0071 | Rear Mount forward body compartments. Includes L1/R1 - 44" wide x 26" deep in the 56" lower area and 12" deep in the 12" upper area L2/R2 - 44" wide x 26" deep in the 56" lower area and 12" deep in the 12" upper area L3/R3 - 56" wide x 26" deep in the 22" lower area and 12" deep in the 12" upper area L4 - (pump panel location upper section) - 46" wide x 24" high x 24" deep in the lower section and R4 - 46" wide x 24" deep in the 56" lower area and 12" deep in the 12" upper area. | 40513 |
| 3105-0072 | Transverse module (full width and height of the body) located forward of the body. Includes single 24" wide compartment opening per side (with a shallow lower area and a transverse upper area with full width smooth plate flooring). Upper area of transverse module to have diamond plate dunnage pan. | 11505 |
| 3105-0078 | Transverse module (full width and height of the body) located forward of the body. Includes single 38" wide compartment opening per side (with a shallow lower area and a transverse upper area with smooth plate flooring). Rearward transverse compartment area to have triple preconnects with removable trays (side by side). Upper area of transverse module to have diamond plate dunnage pan. | 10805 |
| 3110-0000 | Center Slam Strip Rear End with (3) compartments- (2) lower and (1) upper and a diamond plate center strip for a Jet or Newton Dump application. Includes diamond plate panels. | 2511 |
| 3110-0001 | Center Slam Strip Rear End with (3) compartments- (2) lower and (1) upper and a smooth plate center strip for a Jet or Newton Dump application. Includes smooth plate panels. | 2511 |
| 3110-0002 | Upper and Lower Rear Compartment. Includes diamond plate panels. | 1935 |
| 3110-0003 | Upper and Lower Rear Compartment. Includes smooth plate panels. | 1935 |
| 3110-0004 | Full Height Rear Compartment. Includes diamond plate panels. | 1360 |
| 3110-0005 | Full Height Rear Compartment. Includes smooth plate panels. | 1360 |
| 3110-0006 | Full Height Rear Compartment with Upper Ladder Storage Compartment. Includes smooth plate panels. Includes area for storage of (1) 24' (1) 14' (1) 10' Attic (2) pike poles and a drop down storage access door with push button latches (wire to door ajar). | 2318 |
| 3110-0007 | Full Height Rear Compartment. Includes diamond plate panels 30 degree angle of departure with flip down tailboard and handrails- (2) vertically on trailing edge of body and horizontally mounted handrail(s) below hosebed. | 2968 |
| 3110-0008 | Full Height Rear Compartment. Includes smooth plate panels angled rear body with flip down tailboard and handrails- (2) vertical on trailing edge of body and horizontal mounted handrail(s) below hosebed. | 2968 |
| 3110-0010 | Full Height Rear Compartment with Upper Ladder Storage Compartment. Includes area for storage of (1) 24' (1) 14' (1) 10' Attic (2) pike poles and a drop down storage access door with push button latches (wire to door ajar). | 2318 |
| 3110-0011 | Full Height Rear Compartment with Upper Storage Compartment and Side Storage Tunnel. Includes smooth plate panels and storage access doors with push button latches. | 2411 |
| 3110-0012 | Full Height Rear Compartment with Upper Storage Compartment and Officer Side Ladder Tunnel. Includes diamond plate panels and storage access doors with push button latches. | 2411 |
| 3110-0013 | Full Height Rear Compartment with Officer Side Storage Tunnel. Includes smooth plate panels and storage access door with push button latch. | 1264 |
| 3110-0014 | Full Height Rear Compartment with Officer Side Ladder Tunnel and Recessed Traffic Advisor. Includes smooth plate panels and storage door with push buton latch.. | 1673 |
| 3110-0015 | Full Height Rear Compartment with Officer Side Storage Tunnel. Includes diamond plate panels and storage access door with push button latch. | 1225 |
| 3110-0016 | Full Height Rear Compartment with Officer Side Ladder Tunnel and Recessed Traffic Advisor. Includes diamond plate panels and storage door with push button latch. | 1673 |
| 3110-0017 | Full Height Rear Compartment with diamond plate panels. | 1134 |
| 3110-0018 | Full Height Rear Compartment with smooth plate panels. | 1134 |
| 3110-0019 | Full Height Rear Compartment with recessed traffic advisor and smooth plate panels. | 1581 |
| 3110-0020 | Full Height Rear Compartment with recessed traffic advisor and diamond plate panels. | 1581 |
| 3110-0021 | Rear mount rear end with upper storage area and lower pump panel. Includes 12" bolt-on tailboard smooth plate panels and upper access area door with push button latches. | 1880 |

| Item No. | Description | |
|---|---|---|
| 3110-0023 | Rear mount rear end with upper storage area lower pump panel area and officer side ladder/equipment tunnel. Includes 12" bolt-on tailboard smooth plate panels upper access area and ladder/equipment storage doors with push button latches. | 1968 |
| 3110-0024 | Stainless Steel rear end with lower center compartment. Includes 12" bolt-on diamond plate tailboard and handrails- (2) vertically on trailing edge of body and horizontally mounted handrail(s) below hosebed. | 2683 |
| 3110-0025 | Stainless steel rear end with lower center compartment. | 2869 |
| 3110-0027 | Rear of body to have un-painted extrusions with un-painted smooth plate body panels or just unpainted smooth plate to facilitate rear body striping. | 280 |
| 3110-0028 | Rear body panels to be painted smooth plate. | 983 |
| 3110-0033 | Single low rear compartment. For use with low hosebed. Includes diamond plate panels. | 1021 |
| 3110-0035 | Upper rear compartment depth to be approximately 25" deep. | 306 |
| 3110-0037 | Full Height Rear Compartment. Includes diamond plate panels recessed traffic advisor and full width rear intermediate step located below the recessed advisor. B1 compartment to have no louvers. Includes access panel on bottom of compartment break to be 7" wide x 32" long. Panel to be centered front to back and side to side. | 2483 |
| 3110-0038 | Bolt-on diamond plate tailboard (full width of rear compartment). Includes the enhanced extended side compartment frame work with diamond plate compartment tops (3) folding steps- (2) low and (1) high officer side with a 12" handrail (as applicable) and handrails- (2) vertically on trailing edge of body and horizontally mounted handrail(s) below hosebed. | 948 |
| 3110-0039 | Bolt-on diamond plate tailboard (full width of body). Includes (2) handrails- (1) vertical on officer body and (1) horz below hosebed aluminum ladder (angled) on offier side from tailboard to top edge of body and (3) Cast Products steps (staggered) on driver side. | 3301 |
| 3110-0040 | Compartment B1 to be 30" deep IPOS 26" deep. | 961 |
| 3110-0042 | Single low rear compartment. For use with low hosebed. Includes smooth plate panels. | 1084 |
| 3110-0043 | Full Height Rear Compartment with Full Width Upper Storage Compartment. Includes officer side area for storage of (1) 10' Attic (7) pike poles and a drop down storage access door with push buton latches (wire to door ajar). Includes driver side area for storage of backboards and a drop down storage access door with push buton latches (wire to door ajar). Includes (1) divider located 25" off officer's side wall. Includes diamond plate panels. | 2756 |
| 3110-0044 | Bolt-on diamond plate 10" tailboard (full width of body). Includes handrails- (2) mounted vertical on trailing edge of body and horizontal mounted handrail(s) below hosebed. | 1141 |
| 3110-0045 | Upper and Lower Rear Compartment with Officer Side Ladder Tunnel. Includes smooth plate panels and storage access door with push button latches. | 3014 |
| 3110-0046 | Enhanced extended rear compartmentation for Rescue Pumper. Includes 14" of additional interior width to the rear side compartments and 25" of additional depth in the rearward 14" wide section. Overall interior height will vary depending on additional option selections. | 2121 |
| 3110-0047 | Full Height Rear Compartment with Full Width Upper Ladder Storage Compartment with smooth plate panels. Includes area for storage of (1) 24' (1) 14' (1) 10' Attic (2) pike poles (1) stokes basket drop down storage access door with push button latches (wire to door ajar) and retaining straps for tunnel contents. Includes channels each side of ladder tunnel for discharges to terminate. | 3476 |
| 3110-0048 | Enhanced extended rear compartmentation for Rescue Pumper. Includes 14" of additional interior width to the rear side compartments and 25" of additional depth in the rearward 14" wide section. Overall interior height will vary depending on additional option selections. Includes bolt-on diamond plate tailboard (full width of rear compartment) and handrails- (2) vertically on trailing edge of body and horizontally mounted handrail(s) below hosebed. | 2932 |
| 3110-0049 | Bolt-on diamond plate tailboard (full width of rear compartment). Additional 10" of tailboard to run full width of body ("T" shaped tailboard). Includes the enhanced extended side compartment frame work with diamond plate compartment tops (1) officer side lower area folding step. Driver side includes (1) upper hosebed mounted handrail (as applicable) and handrails- (2) vertical on trailing edge of body and horizontal mounted handrail(s) below hosebed. | 2554 |
| 3110-0050 | Upper Storage Compartment to hold (1) stokes basket in place of standard ladder components. Stokes basket to be located on officer side of storage tunnel. Stop bracket included. | 186 |
| 3110-0051 | B1 compartment to have no door. Includes removal of compartment lights and door ajar. | 410 |
| 3110-0052 | Bolt-on diamond plate tailboard (full width of rear compartment). Includes the enhanced extended side compartment frame work and handrails- (2) vertical on trailing edge of body and horizontal mounted handrail(s) below hosebed. | 1216 |
| 3110-0053 | Bolt-on diamond plate tailboard (full width of rear compartment). Additional 10" of tailboard to run full width of body ("T" shaped tailboard). Includes the enhanced extended side compartment frame work and handrails- (2) vertical on trailing edge of body and horizontal mounted handrail(s) below hosebed. | 2554 |

| Item No. | Description | |
|---|---|---|
| 3110-0054 | Rear Mount Rear Body. Includes rear body side structures with compartment L3/R3 interior compartment offset for pump panel location and mounting rear body structure for rear mounted pump application (includes painted job color smooth plate panels outboard of pump access/panel(s) and rear body hosebed. | 15233 |
| 3110-0056 | Compartment preconnect hose feed thru. Includes smooth plate doors with push button latches. Locate to [#LOC] just outboard of the rear pump panel. | 2279 |
| 3110-0057 | Lower Rear Compartment only. Upper section to be diamond plate panel. Includes diamond plate panels. | 1176 |
| 3110-0060 | Full Height Rear Compartment with Upper Ladder Storage Compartment. Includes diamond plate panels. Includes area for misc. storage and a drop down storage access door with push button latches (wire to door ajar). | 2318 |
| 3110-0062 | Upper Storage Compartment to hold (1) backboard in place of standard ladder components. Backboard to be located on officer side of storage tunnel. Includes stop bracket located at apporximately 80". | 330 |
| 3110-0063 | Full Height Rear Compartment with Upper Storage Compartment. Includes smooth plate panels. Includes area for misc. storage and a drop down storage access door with push button latches (wire to door ajar). | 2318 |
| 3110-0064 | Upper Storage Compartment to have (1) bolt-in compartment 24" deep. Compartment for storage of misc. items. Includes holding center divider for lower hosebed short to allow room for compartment. | 654 |
| 3110-0065 | Full Height Rear Compartment with Officer Side Ladder Tunnel. Includes officer side rear tunnel access door with latch (material to match rearend platework). | 1264 |
| 3110-0066 | Full Height Rear Compartment. | 1134 |
| 3110-0067 | Lower Rear Compartment only. Upper section to be diamond plate panel. Includes diamond plate panels. Additional diamond plate area just above compartment for mounting of recessed directional lightbar. | 6528 |
| 3110-0068 | Center Slam Strip Rear End with (3) compartments - (2) lower and (1) upper and a smooth plate center strip for a Jet or Newton Dump application. Includes smooth plate panels. Includes area above upper compartment for directional lightbar. | 5185 |
| 3110-0069 | Full Height Rear Compartment with Upper Storage Compartment and Officer Side Ladder Tunnel. Includes diamond plate panels and storage access doors with Tri-Mark model 030-1300 door latches. The upper tunnel to have on the officer side a stop at 128" and on the driver side a stop at 72" from rear of truck. | 2934 |
| 3110-0070 | Upper and Lower Rear Compartment. Includes smooth plate panels. B1 to be 36" wide due to enhanced extended feature and vertically hinged door(s). | 2715 |
| 3110-0071 | Spacer panel(s) for recess/warning lighting. Located:[#LOC]. Panel(s) tol be painted job color and to iinclude mounting area for any and all lighting mounted in area. | 318 |
| 3110-0073 | Upper rear compartment depth to be approximately 29" deep. | 566 |
| 3110-0074 | Full Height Rear Compartment with Officer Side Ladder Tunnel. Includes smooth plate panels and storage access door with push button latch. Includes a 18" channel for (2) tank inlets and (1) 5" jet dump located 16" up from bottom of compartment opening. Includes area above the channel for mounting of a booster reel. The lower opening to have double door and the upper opening to have a dutch door. | 5160 |
| 3110-0075 | Full Height Rear Compartment with Officer Side Ladder Tunnel. Includes diamond plate panels and storage access door with push button latch(es). Includes stepped upper horizontal tube to reduce hosebed height from ground over tank and driver side hosebed area. | 3172 |
| 3110-0076 | Full Height Rear Compartment with Officer Side Ladder Tunnel. Includes diamond plate panels and storage access door with D-ring latch. | 1225 |
| 3110-0078 | Lower Rear Compartment only. Upper section to be smooth plate panel. Includes smooth plate panels. | 1176 |
| 3110-0080 | Center Slam Strip Rear End with smooth plate center strip for a Jet or Newton Dump application. Includes smooth plate low side panels and diamond plate upper panel. | 2209 |
| 3110-0081 | Full Height Rear Compartment with Officer Side Ladder Tunnel. Includes smooth plate panels and storage access door with D-ring latch. | 1264 |
| 3110-0083 | Half length offcir side tunnel. Reduces officer side upper compartment depths of R2 and R3 to 12" deep IPO 26". | 2303 |
| 3110-0085 | Upper and Lower Rear Compartment. Includes upper and lower sanded smooth plate panels. Upper rear compartment door to be offset to driver side constructed of smooth plate. Upper rear compartment to be 56" wide for little giant ladder storage. (2) 1.5" x 4" extrusions to be stacked between upper and lower compartments for directional light mounted under intermediate rear step. | 2515 |
| 3110-0086 | Bolt-on diamond plate 24" tailboard (full width of hosebed). Includes handrails- (2) vertical mounted on trailing edge of body and (1) horizontal mounted handrail(s) below hosebed. | 1213 |
| 3110-0087 | Full Height Rear Compartment with Upper Storage Compartment and Officer Side Ladder Tunnel. Includes smooth plate panels and storage access doors with Tri-Mark door latches. | 3015 |

| Item No. | Description | |
|---|---|---|
| 3110-0088 | Full Height Rear Compartment with Officer Side Ladder Tunnel. Includes diamond plate panels and storage access door with push button latch. Officer side to have Rescue Pumper and Driver to have Pumper style enhanced extended. | 4846 |
| 3110-0090 | Handrail above B1 and below the hosebed will be "split". Each handrail to be approximately 18" and installed approximately 6" offset of centerline of B1 to allow for a 12" gap at center. | 571 |
| 3110-0093 | Full Height Rear Compartment with Driver Side Storage Tunnel. Includes smooth plate panels and storage access door with push button latch. | 1264 |
| 3110-0094 | Full Height Rear Compartment with Upper Storage Compartment and Driver Side Storage Tunnel. Includes smooth plate panels and storage access doors with push button latches. | 2411 |
| 3110-0095 | Full Height Rear Compartment with Driver and Officer Side Storage Tunnels. Includes smooth plate panels and storage access doors with push button latches. | 1394 |
| 3110-0096 | Full Height Rear Compartment with Upper Storage Compartment Driver and Officer Side Storage Tunnels. Includes smooth plate panels and storage access doors with push button latches. | 2697 |
| 3110-0097 | Bolt-on smooth plate tailboard (full width of rear compartment). Tailboard to include gator grip and be black duraback painted. Includes the enhanced extended side compartment frame work (2008 design) and handrails- (2) vertically on trailing edge of body and horizontally mounted handrail(s) below hosebed. Handrails to include center stanchion. | 1841 |
| 3110-0099 | NFPA hose bed access ladder. Zico model RL12 for increased visibility of rear outboard body mounted DOT/NFPA lighting. Includes required step lights and additional hand rail(s) if applicable. Location: [#LOC]. | 1907 |
| 3110-0100 | Backboard stop bracket to be located approximately 76" back in officer side of ladder tunnel. | 264 |
| 3110-0101 | Compartment preconnect hose feed thru. Includes smooth plate doors with push button latches. Locate to [#LOC] just outboard of the rear pump panel. | 1382 |
| 3110-0102 | Upper Storage Compartment to hold (2) backboards in place of standard ladder components. Backboard to be located on officer side of storage tunnel. Includes stop bracket located at approximately 74". | 654 |
| 3110-0103 | Bolt-on diamond plate tailboard (full width of rear compartment). Includes the enhanced extended side compartment frame work with diamond plate compartment tops (embossied IPO Gator Grip due to department mounting of hose storage connectors in this area) and (1) driver and officer side lower area folding step (NO steps on driver or officer side upper areas). Main hosebed access is to be from the driver side of the pump module access ladder). Includes handrails- (2) vertically on trailing edge of body and horizontally mounted handrail(s) below hosebed. | 1068 |
| 3110-0104 | (2) vertically mounted booster reel roller assemblies. Locate (1) each side inboard side of the enhanced extended area (as far outboard as applicable). For use with rear compartment mounted booster reel. | 533 |
| 3110-0105 | Upper Storage Compartment to hold (1) 17' Little Giant ladder and (1) backboard in place of standard ladder components. Little giant ladder to be located on officer side of storage tunnel stop bracket included approximately 113" back from opening ladder to be stored in unfolded position. Backboard to be located in aluminum box hanging from upper area of officer side tunnel. Tunnel divider to be held 6" short from opening. | 654 |
| 3110-0106 | Rear Mount pump/ladder tunnel access door. Includes single center mounted D-Ring latch and (2) hold open devices. Door to be [#LOC]. Door to open to 90 degrees and includes pull strap for access from ground. | 539 |
| 3110-0107 | Upper and Lower Rear Compartment. Includes smooth plate panels. Includes a 19" channel for (2) tank inlets and (1) 5" jet dump located between the upper and lower non-transverse style compartments. The lower compartment height to be 15". | 4150 |
| 3110-0109 | Upper and Lower Rear Compartment. Includes smooth plate lower panels outboard of B1 and diamond plate upper panels outboard of B2. The B1 compartment to be 42" wide and B2 compartment to be 38" wide. Includes (2) 1.5" x 4" extrusions to be stacked between upper and lower compartments for directional light mounted under intermediate rear step. | 4048 |
| 3110-0110 | Rear Mount Rear Body. Includes rear body side structures with compartment L3/R3 interior compartment offset for pump panel location and mounting rear body structure for rear mounted pump application. Includes painted job color smooth plate panels (and storage access door with push button latch if applicable) outboard of pump access/panel(s) and rear body hosebed. | 10758 |
| 3110-0111 | Upper and Lower Rear Compartment. Includes smooth plate lower panels outboard of B1 and diamond plate upper panels outboard of B2. Includes (2) 1.5" x 4" extrusions to be stacked between upper and lower compartments for directional light mounted under intermediate rear step and back-up camera to be mounted centered in front of directional lightbar. The upper compartment to be offset to officer side due to rear discharge options. | 4048 |
| 3110-0113 | Bolt-on diamond plate 12" tailboard with Gator Grip (full width of body). Includes hand rails- (2) vertical on trailing edge of body and horizontal mounted hand rail(s) below hose bed. | 1141 |
| 3110-0114 | Bolt-on diamond plate 12" tailboard full width of body with Bustin Tread. This provides a flat back body design. Includes hand rails (2) vertically on trailing edge of body and horizontally mounted hand rail below hose bed. | 1141 |

| Item No. | Description | |
|---|---|---|
| 3110-0115 | Bolt-on diamond plate 12" tailboard with Gator Grip (full width of body). Includes (2) squared off beavertails with hand rails- (2) vertically on trailing edge of body and horizontally mounted hand rail below hose bed. | 856 |
| 3110-0116 | Bolt-on diamond plate 12" tailboard full width of body with Bustin Tread. Includes (2) squared off beavertails with hand rails (2) vertically on trailing edge of beavertails and horizontally mounted hand rail below hose bed. | 856 |
| 3110-0117 | Bolt-on diamond plate 20" tailboard with Gator Grip. Includes hand rails- (2) vertically on trailing edge of body and horizontally mounted hand rail(s) below hose bed. | 1062 |
| 3110-0118 | Bolt-on diamond plate 20" tailboard between rear side compartments with Bustin Tread. Includes hand rails (2) vertically on trailing edge of body and horizontally mounted hand rail below hose bed. | 1062 |
| 3110-0119 | Bolt-on diamond plate 20" tailboard with Gator Grip (full width of body). Includes (2) squared off beavertails with hand rails- (2) vertically on trailing edge of body and horizontally mounted hand rail(s) below hose bed. | 1062 |
| 3110-0120 | Bolt-on diamond plate 20" tailboard with Bustin Tread (full width of body). Includes (2) squared off beavertails with hand rails (2) vertically on trailing edge of body and horizontally mounted hand rail below hose bed. | 1062 |
| 3110-0121 | Bolt-on diamond plate 20" tailboard with Gator Grip (full width of body). Includes (2) slanted beavertails with removable outer panels and hand rails- (2) vertically on trailing edge of body and horizontally mounted hand rail(s) below hose bed. | 1062 |
| 3110-0122 | Bolt-on diamond plate 20" tailboard with Bustin Tread (full width of body). Includes (2) slanted beavertails and hand rails (2) vertically on trailing edge of body and horizontally mounted hand rail below hose bed. | 1062 |
| 3110-0123 | Lower rear stainless steel short compartment B1 46" wide x 35" high x 26" deep. Includes bolt-on intermediate step above. Entire rear panel to be smooth aluminum plate for Chevron graphics. | 1176 |
| 3110-0124 | Lower rear stainless steel tall compartment B1 46" wide x 45" high x 26" deep. Includes bolt-on intermediate step above. Entire rear panel to be smooth aluminum plate for Chevron graphics. | 1360 |
| 3110-0125 | Upper Storage Tunnel to have bolt-in side panels to enclose the sides of the tunnel. | 654 |
| 3110-0126 | Upper and Lower Rear Compartment with Driver and Officer Side Storage Tunnels. Includes smooth plate panels. Includes a 19" area for (1) tank inlet and (1) 5" jet dump located between the upper and lower compartments. The lower compartment height to be 17". The upper compartment to be full height and depth includes bolt-in floor for access to plumbing components. Driver side tunnel opening to be narrowed to allow non-recessed folding step. | 4451 |
| 3110-0127 | Bolt-on diamond plate 18" tailboard (full width of body). Includes (2) slanted beavertails (no stanchions) with removable outer panels and handrails- (2) vertically on trailing edge of body and horizontally mounted handrail(s) below hosebed. Upper beavertail to be 8.75 due to folding steps. | 1327 |
| 3110-0128 | Full Height Rear Compartment with smooth plate panels. The rear compartment to be 36" due to the enhanced extended compartment and double door options. | 1496 |
| 3110-0129 | Full Height Rear Compartment with Officer Side Storage Tunnel. Includes smooth plate panels and storage access door with push button latch. The rear compartment to be 36" due to the enhanced extended compartment and double door options. | 1626 |
| 3110-0130 | Rear end tanker. Includes smooth plate upper and lower panels and a smooth plate center strip for a Jet or Newton Dump application. | 681 |
| 3110-0131 | Full Height Rear Compartment with Officer Side Storage Tunnel. Includes smooth plate panels and storage access door with push button latch. Includes stepped upper horizontal tube to reduce hosebed height from ground over tank area. | 2470 |
| 3110-0132 | Bolt-on diamond plate tailboard (full width of rear compartment). Additional 10" of tailboard to run full width of body ("T" shaped tailboard). Includes the enhanced extended side compartment frame work and handrails - (1) vertical on trailing edge of body opposite side of ladder and handrail(s) horizontal below hosebed. | 2554 |
| 3110-0133 | Rear end tanker. Includes smooth plate upper and lower panels a smooth plate center strip for a Jet or Newton Dump application and upper area access door for thru the tank storage. | 802 |
| 3110-0136 | Full Height Rear Compartment with Upper Ladder Storage Compartment. Includes smooth plate panels. Includes area for storage of (1) 24' (1) 14' (1) 10' Attic (4) pike poles and a lift-up storage access door with push buton latches (wire to door ajar). Lift-up door to use plunger style hold open device. Includes "NO STEP" tags located on outboard ends and positioned to be read from the open position of the door. | 2318 |
| 3110-0144 | Bolt-on diamond plate tailboard (full width of rear compartment). Additional 10" of tailboard to run full width of body ("T" shaped tailboard). Includes the enhanced extended side compartment frame work and handrails - (1) vertical on trailing edge of body opposite side of ladder and handrail(s) horizontal below hosebed on trailing edge of the intermediate step. | 2554 |
| 3110-0145 | Full Height Rear Compartment with smooth plate panels. | 1434 |
| 3110-0146 | Rear end with full height compartment. Includes diamond plate panels and double upper extrusions below hosebed area. Interior of compartment to be transverse side to side. | 1662 |

| Item No. | Description | |
|---|---|---|
| 3110-0147 | Bolt-on diamond plate 16" tailboard (full width of body). Includes (2) slanted beavertails with raised stanchions post with E-ONE logo style mounts and removable outer panels handrails- (2) vertically on trailing edge of body/beavertail and horizontally mounted handrail below hosebed on trailing edge of intermediate step. | 856 |
| 3110-0148 | Bolt-on tailboard compartments located to the driver and officer side of B1. The bolt-on tailboard compartments to be 64" high with embossed diamond plate compartment tops. The compartments includes hinged smooth plate door with 1/4 turn latch(es). The each compartment to have 4" gap at top of the door. Each door to be wired into door ajar indicator. | 3275 |
| 3110-0149 | Full Height Rear Compartment with Upper Ladder Storage Compartment. Includes smooth plate panels. Includes area for storage of (1) 24' (1) 14' (1) 10' Attic (2) pike poles and a drop down storage access door with Tri-Mark latch (wire to door ajar). | 2405 |
| 3110-0150 | Upper Storage Compartment to hold (1) 17' Little Giant ladder. Little giant ladder to be located on driver side of storage tunnel stop bracket included approximately 58" back from opening. | 654 |
| 3110-0151 | Bolt-on diamond plate tailboard (full width of rear compartment). Additional 5.5" of tailboard to run full width of body ("T" shaped tailboard). Includes the enhanced extended side compartment frame work with diamond plate compartment tops (1) officer side lower area folding step. Driver side includes (1) upper hosebed mounted handrail (as applicable) and handrails- (2) vertically on trailing edge of body and horizontally mounted handrail(s) below hosebed. | 2554 |
| 3110-0152 | Upper Storage Compartment divider to be located offset 26" from officer side. Officer side of divider to be enclosed to 86" deep and driver side of divider to be enclosed to 72" deep. | 654 |
| 3110-0153 | Rear access into the enhanced extended portion of the L2 and R2 compartments. Includes smooth plate access doors with (2) push button latches each (wired to door ajar). | 837 |
| 3110-0156 | Upper Storage Compartment to hold (1) 17' Little Giant ladder (1) 24' 2-section ladder (1) 14' roof ladder (1) 10' attic ladder and (2) pike poles. | 654 |
| 3110-0157 | Rear end with Upper Storage Compartment. Includes smooth plate panels. Includes area for misc. storage and vertical hinged double doors with D-ring latch (wire to door ajar). | 2318 |
| 3110-0158 | Bolt-on diamond plate 16" tailboard (full width of body). Includes handrails- (2) vertical on trailing edge of body and horizontal mounted handrail(s) below hosebed. | 1320 |
| 3110-0161 | Bolt-on diamond plate 25" tailboard (full width of body). Includes (2) squared off beavertails (no stanchions) with removable outer panels and (2) 48" handrails vertical on beavertails and (1) 36" horizontal below hosebed. | 1308 |
| 3110-0162 | Full Height Rear Compartment with Officer Side Storage Tunnel. Includes smooth plate panels and storage access door with push button latch. B1 compartment opening to be 35" wide due to officer side tailboard compartment. | 1446 |
| 3110-0163 | Enhanced extended rear end with tall rear compartment and with officer side storage tunnel. Driver side enhanced extended to be be Pumper style and officer to be Recue Pumper style.Officer side hosebed extrusion to be stepped for storage tunnel. Included are diamond plate tailboard full width of the rear compartment smooth plate panels and storage access door (wired to door ajar) with push button latch. | 2726 |
| 3110-0164 | Bolt-on diamond plate 24" tailboard (full width of body). Includes (2) squared off 12" deep beavertails (no stanchions) with removable outer panels and handrails- (2) vertical on trailing edge of body and horizontal mounted handrail(s) below hosebed. The outer beavertail panels to be aluminum smooth plate to allow for chevron striping. For use with swivel style rear tank dump only. | 1457 |
| 3110-0165 | Full Height Rear Compartment with Driver Side Storage Tunnel. Includes smooth plate panels and storage access door with push button latch. The rear compartment to be 36" due to the enhanced extended compartment and double door options. | 1626 |
| 3110-0167 | Full Height Rear Compartment with Upper Storage Compartment and Officer Side Ladder Tunnel. Includes smooth plate panels and storage access doors with Tri-Mark model 030-1300 door latches. The upper tunnel access door to be horizontally hinged lift-up with gas shock. The upper tunnel to have on the officer side a stop at 128" and on the driver side a stop at 72" from rear of truck. | 2934 |
| 3110-0168 | Bolt-on diamond plate tailboard (full width of rear compartment). Additional 5" of tailboard to run full width of body ("T" shaped tailboard). Includes the enhanced extended side compartment frame work (1) officer side lower area folding step and handrails- (2) vertically on trailing edge of body and horizontally mounted handrail(s) below hosebed. | 1865 |
| 3110-0170 | Lower Rear Compartment with Officer Side Storage Tunnel. Includes smooth plate panels and storage access door with push button latch. | 1394 |
| 3110-0172 | Bolt-on diamond plate 14" tailboard full width of body with Bustin Tread provides flat back body design. Includes rear of body hand rails. | 1209 |
| 3110-0173 | Rear body smooth ladder door be painted job color finish to match body color. | 435 |
| 3110-0175 | Lower Rear Compartment only. Upper section to be smooth plate panel. Includes smooth plate panels. Upper section to be set back 8" with diamond plate step with gator grip. | 2746 |
| 3110-0176 | Full Height Rear Compartment. Includes smooth plate panels. B1 to be as tall as possible (remove traffic advisor platework). | 1331 |

| Item No. | Description | |
|---|---|---|
| 3110-0177 | Bolt-on diamond plate 12" tailboard (full width of body). Includes (2) squared off beavertails (no stanchions) with removable outer panels and (2) vertical mounted handrails on trailing edge of body. | 856 |
| 3110-0178 | Full height rear compartment. Includes smooth plate panels. Bolt-on diamond plate tailboard (full width of rear compartment). Includes the driver side rescue style enhanced extended side compartment frame work with diamond plate compartment tops officer side pumper style enhanced extended side compartment frame work with diamond plate compartment top. Officer side lower rear compartment will be transverse with B1. Handrail included and located: (1) driver upper hosebed mounted handrail (as applicable) and handrails- (2) vertically on trailing edge of body and horizontally mounted handrail(s) below hosebed. | 3146 |
| 3110-0179 | Upper Storage Compartment to hold (1) 24' 2-section ladder (1) 14' roof ladder (1) 12' pike pole (1) 8' pike pole (2) 6' pike poles and (2) 6' D-handle trash hooks. Area rearward of pike poles to be closed off just before fill towers. | 837 |
| 3110-0180 | Bolt-on diamond plate 14" tailboard (full width of body). For use with rear ladder application. Includes handrails- (1) mounted vertical on trailing edge of body opposite side of ladder and handrail(s) horizontal below hosebed. | 1176 |
| 3110-0181 | Rear flip down tailboard. Includes indicator in cab when the tailboard is in the down position. Includes handrails- (2) vertically on trailing edge of body and horizontally mounted handrail(s) below hosebed. | 4122 |
| 3110-0182 | Full Height Rear Compartment with Upper Storage Compartment. Includes diamond plate panels. Includes area for misc. storage and a drop down storage access door with a D-ring latch (wire to door ajar). | 2318 |
| 3110-0183 | Full height rear compartment with upper ladder storage compartment. Includes smooth plate panels. Includes area for storage of (1) 24'(1)14'(1)10' attic (2) pike poles and a drop down storage access door with push button latches (wire to door ajar).note door to open up past 90 degrees. | 2318 |
| 3110-0185 | Upper and Lower Rear Compartment. Includes smooth plate panels. Upper compartment to be as tall as possible (remove traffic advisor platework). | 2059 |
| 3110-0186 | Full Height Rear Compartment with Officer Side Storage Tunnel. Includes smooth plate panels and storage access door with push button latch. Area just below hosebed for discharge pipe routing above the rear compartment. Includes stepped upper horizontal tube to reduce hosebed height from ground over tank area. | 2742 |
| 3110-0188 | Bolt-on diamond plate 10" tailboard (full width of body). For use with rear ladder application. Includes a handrail vertically mounted on trailing edge of body opposite side of ladder. | 1023 |
| 3110-0189 | Full Height Rear Compartment with Officer Side Storage Tunnel. Includes smooth plate panels and storage access door with push button latch (remove traffic advisor platework). | 1264 |
| 3110-0190 | Lower rear stainless steel short compartment B1 46" x 35" high x 26" deep. Includes intermediate step above. Side walls removed to allow a Little Giant ladder to be slid in from compartment R3. Provide a stainless steel bolt-on panel to conceal and protect ladder when stored. | 1454 |
| 3110-0191 | Bolt-on diamond plate 14" tailboard between rear side compartments with Bustin Tread. Includes hand rails (2) vertically on trailing edge of body and horizontally mounted hand rail below hose bed. | 1209 |
| 3110-0193 | Full Height Rear Compartment with Driver Side Storage Tunnel. Includes smooth plate panels and storage access door with push button latch. | 1742 |
| 3110-0194 | Full Height Rear Compartment with smooth plate panels. The B1 compartment to be 40" wide full depth (no compartment break) and as tall as possible (remove traffic advisor platework). | 1742 |
| 3110-0195 | Full Height Rear Compartment. Includes smooth plate panels. The rear compartment to be 36" due to the enhanced extended compartment and double door options. | 1256 |
| 3110-0198 | B1 floor to be recessed as applicable to allow for booster reel and/or dealer installed equipment to be located below newton dump/applicable dump without interference. | 554 |
| 3110-0199 | Compartment B1 24" wide x 10" high x 26" deep located between full length chassis frame rails. The compartment shall include a bottom hinged drop-down access door using a D-ring latch (wire to door ajar). | 1065 |
| 3110-0200 | Full Height Rear Compartment with Driver and Officer Side Storage Tunnels. Includes smooth plate panels and storage access doors with d-ring latches. | 1425 |
| 3110-0201 | Bolt-on diamond plate tailboard (full width of rear compartment). Additional 10" of tailboard to run full width of body ("T" shaped tailboard). Includes the enhanced extended side compartment frame work and (1) handrail vertical on trailing edge of driver's side of body and horizontal mounted handrail (driver's side) below hosebed. | 2554 |
| 3110-0202 | Upper and Lower Rear Compartment. Includes upper and lower sanded smooth plate panels. Upper rear compartment door to be offset to driver side constructed of smooth plate. Upper rear compartment to be 56" wide for little giant ladder storage. (2) 1.5" x 4" extrusions to be stacked between upper and lower compartments for directional light mounted under intermediate rear step. | 2515 |

| Item No. | Description | |
|---|---|---|
| 3110-0203 | Bolt-on diamond plate tailboard (full width of rear compartment). Includes the enhanced extended side compartment frame work with diamond plate compartment tops raised 12" to cover rear piping (1) officer side lower area folding step. Driver side includes (1) upper hosebed mounted handrail (as applicable) and handrails- (2) vertically on trailing edge of body and horizontally mounted handrail(s) below hosebed. | 1308 |
| 3110-0204 | Lower rear stainless steel tall compartment B1 46" wide x 50" high x 26" deep. Includes bolt-on intermediate step above. Entire rear panel to be smooth aluminum plate for Chevron graphics. | 1449 |
| 3110-0206 | Full Height Rear (no compartment). Includes opening for access to rear mount pump panel and smooth plate panels. Includes openings for preconncts to driver's side of rear pump panel | 1614 |
| 3110-0207 | Lower rear stainless steel short compartment B1 46" wide x 35" high x 26" deep without an intermediate rear step. Entire rear panel to be smooth aluminum plate for Chevron graphics. | 940 |
| 3110-0208 | Bolt-on diamond plate 10" tailboard (full width of body). For use with a folding step application. Includes handrails- (2) vertical on trailing edge of body and handrail(s) horizontal below hosebed. | 785 |
| 3110-0209 | Upper and Lower Rear Compartment. Includes smooth plate panels. B1 to be 36" wide due to enhanced extended feature and hinged door(s) as required. | 2715 |
| 3110-0210 | Bolt-on diamond plate 10" tailboard (full width of body). For use with folding step application. Includes handrails- (1) vertical on trailing edge each side of body and handrail(s) horizontal below hose bed. | 1023 |
| 3110-0211 | Bolt-on diamond plate tailboard (full width of rear compartment). Includes the enhanced extended side compartment frame work with diamond plate compartment tops (2) recessed folding steps in lower area (1) officer side (1) driver side. Driver side includes (1) upper hosebed mounted handrail (as applicable) and handrails- (2) vertically on trailing edge of body and horizontally mounted handrail(s) below hosebed. | 1225 |
| 3110-0212 | Bolt-on diamond plate tailboard (full width of hosebed). Additional 10" of tailboard to run full width of body ("T" shaped tailboard). Includes the extended side compartment frame work and handrails- (2) vertical mounted on trailing edge of body and horizontal mounted handrail(s) below hosebed. | 2554 |
| 3110-0213 | Bolt-on diamond plate 20" tailboard with Bustin Tread (full width of body). Includes (2) slanted beavertails and hand rails (2) vertically on trailing edge of body and horizontally mounted hand rail below hose bed. Lower rear stainless steel short compartment B1 46" wide x 35" high x 26" deep without an intermediate rear step. Entire rear panel to be smooth stainless steel for Chevron graphics. | 2333 |
| 3110-0215 | Upper Storage Compartment to hold (1) 10' attic ladder (4) pike poles and (2) 6" x 10' hard suction hoses. Includes stop bracket included approximately 130" back from opening. An enclosed frontal area shall be included as part of the tunnel design. | 654 |
| 3110-0216 | Bolt-on diamond plate 12" tailboard (full width of body). Includes (2) squared off beavertails with stanchions and removable outer panels and handrails- (2) vertical on trailing edge of body and horizontal mounted handrail(s) below hosebed. | 856 |
| 3110-0220 | Bolt-on 10" tailboard (full width of body) aluminum smooth plate with black Scorpion coating (IPOS diamond plate). For use with rear ladder application. Includes handrails- (1) vertically on trailing edge of body opposite side of ladder and handrail(s) horizontally below hosebed. | 1342 |
| 3110-0221 | Full height rear compartment with upper storage compartment. Includes smooth plate panels. Includes area for misc. storage and a lift up storage access door with push button latches (wire to door ajar). | 2496 |
| 3110-0222 | Bolt-on 10" diamond plate tailboard (full width of rear compartment). Includes the enhanced extended side compartment frame work. For use with rear ladder application. Includes handrails (1) vertical mounted on trailing edge of body opposite side of ladder and (1) horizontal mounted handrail(s) below hosebed. | 2237 |
| 3110-0223 | Full Height Rear Compartment with Officer Side Storage Tunnel. Includes smooth plate panels and storage access door with d-ring latch. | 1264 |
| 3110-0224 | Rear body panels to be upgraded from smooth aluminum plate to un-painted smooth FRP. | 303 |
| 3110-0225 | Full Height Rear Compartment with Upper Ladder Storage Compartment. Includes smooth plate panels. Includes area for storage of (1) 24' (1) 14' (1) 10' Attic (2) pike poles and a lift up storage access door with push button latches (wire to door ajar). The door shall be held in place with a plunger style hold open device. | 2318 |
| 3110-0226 | Bolt-on diamond plate 22" tailboard between rear side compartments with Bustin Tread. Includes hand rails (2) vertically on trailing edge of body and horizontally mounted hand rail below hose bed. | 1209 |
| 3110-0227 | Upper and lower rear compartment. Includes smooth plate panels. For use with raised lower rear body (B1 is 25" high). | 1935 |
| 3110-0228 | Bolt-on diamond plate 12" tailboard (full width of body). Includes (2) squared off beavertails (no stanchions) with removable outer panels and handrails- (2) vertical trailing edge of body and horizontal mounted handrail(s) below hosebed. Beavertails and outer panels to be smooth plate painted job color. Tailboard to diamond plate painted black durabak. | 2112 |

| Item No. | Description | |
|---|---|---|
| 3110-0229 | Lower rear stainless steel tall compartment B1 46" wide x approx. 64" high x 26" deep but door opening remains in the normal 45" high position. Includes bolt-on intermediate step above the door opening. Entire rear panel to be smooth plate for Chevron graphics. | 1505 |
| 3110-0230 | Bolt-on 10" tailboard (full width of body) aluminum smooth plate with black Scorpion coating (rough finish) IPOS diamond plate. For use with rear ladder application. Includes handrails- (1) vertically on trailing edge of body opposite side of ladder and handrail(s) horizontally below hosebed. | 1342 |
| 3110-0232 | Bolt-on diamond plate 22 inch tailboard tailboard (full width of body). Includes (2) squared off beavertails (no stanchions) with removable outer panels and handrails- (2) vertical on trailing edge of body and horizontal mounted handrail(s) below hosebed. | 1339 |
| 3110-0233 | Bolt-on tailboard compartments located to the driver and officer side of B-1. The bolt-on tailboard compartments to be full height just below hosebed. Doors to be (1) Piece full height as applicable and hinged to the outside with push-button latches. Install shelf tracking in each compartment full height | 3877 |
| 3110-0234 | Upper Storage Compartment to hold (1) stokes basket in place of standard ladder components. Stokes basket to be located on officer side of storage tunnel. Stop bracket full width across tunnel shall be included. | 186 |
| 3110-0235 | Step full width rear intermediate. Intermediate rear step to be located just below the upper ladder storage compartment. | 885 |
| 3110-0236 | Step full width rear intermediate. Intermediate rear step to be located just above the upper ladder storage compartment. | 885 |
| 3110-0237 | Full height rear compartment with upper storage compartment. Includes smooth plate panels. Includes an area for misc. storage and a lift up storage access door with a D-ring latch (wire to door ajar) and a plunger style hold open device. To include a storage sleeve for (2) backboards (72"X16"X2" each) offset to the officer side with a stop at 80". | 2669 |
| 3110-0238 | Bolt-on diamond plate 18" tailboard (full width of body). Includes handrails- (2) vertically on trailing edge of body and handrail(s) horizontally below hosebed. | 1949 |
| 3110-0239 | Bolt-on diamond plate 10" tailboard (full width of body). Includes handrail - (1) vertically on officer side trailing edge of body and horizontally mounted handrail(s) below hosebed. | 1141 |
| 3110-0240 | Lower Rear Compartment with access door above to the ladders storage thru tank. Includes smooth plate panels and storage access door with push button latches. | 1888 |
| 3110-0242 | Bolt-on diamond plate 25" tailboard between rear side compartments with Bustin Tread. Includes hand rails (2) vertically on trailing edge of body and horizontally mounted hand rail below hose bed. | 1209 |
| 3110-0243 | Bolt-on diamond plate 16" tailboard (full width of body). For use with flat back style body. Includes handrails- (1) vertically on trailing edge of body opposite side of ladder and handrail(s) horizontally below hosebed. | 1878 |
| 3110-0245 | Bolt-on diamond plate 18" tailboard (full width of body). Includes (2) squared off beavertails (no stanchions) with removable outer panels and handrails- (2) vertical on trailing edge of body and horizontal mounted handrail(s) below hosebed. Outer panels to be smooth plate painted job color. | 1275 |
| 3110-0247 | Full Height Rear Compartment with Upper Storage Compartment and Officer Side Storage Tunnel. Includes smooth plate panels and storage access door with push button latch. Upper compartment to be approx 17" high x 38" wide x 26" deep. | 1783 |
| 3110-0248 | Full Height Rear Compartment. Includes smooth plate panels angled rear body with flip down tailboard and handrails- (2) vertical on trailing edge of body and horizontal mounted handrail(s) below hosebed. | 3618 |
| 3110-0249 | Bolt-on diamond plate 10" tailboard (full width of body). Includes handrails- (2) vertically on trailing edge of body. Must be used with hosebed dividers that include hand hold cut outs (the horizontally mounted handrail(s) are not included). | 1141 |
| 3110-0250 | Top of body stepping surface plate work (compartment tops and enhanced extended compartment top at rear of body) shall be smooth plate painted black Durabak. | 803 |
| 3110-0251 | Full Height Rear Compartment with Officer Side Storage Tunnel. Includes flush smooth plate rear facing body panels and storage access door with push button latch. | 1448 |
| 3110-0252 | Enhanced extended exterior inside facing walls at either side of B1 compartment opening shall be smooth plate painted black durabak. | 660 |
| 3110-0253 | Full Height Rear Compartment with smooth plate panels. Compartment material to be 5083-H321. | 1466 |
| 3110-0254 | Single low rear compartment. For use with low hosebed. Includes smooth plate panels. | 1256 |
| 3110-0255 | Full Height Rear Compartment 44" wide. Includes smooth plate panels. | 1360 |
| 3110-0256 | Bolt-on diamond plate 14" tailboard (full width of body). For use with dual rear ladder application. Includes handrail horizontally mounted below hosebed. | 1176 |
| 3110-0257 | Rear Panel Compartment. Compartment B1 located centered ahead of the rear tailboard shall be 46" wide x approximately 50" high x 26" deep. Solid walls shall be provided on both sides of the rear compartment. This compartment shall be of 12 gauge 304L stainless steel. | 1393 |
| 3110-0258 | Rear Panel Area. The entire rear panel of the body shall be covered using smooth FRP panels for application of the Chevron graphics. The rear panel area shall be of the flat back body design. | 2051 |

| Item No. | Description | |
|---|---|---|
| 3110-0259 | Bolt-on diamond plate 14" tailboard (full width of body). Includes handrails- (2) vertical on trailing edge of body and horizontal mounted handrail(s) below hosebed. | 1294 |
| 3110-0262 | Full Height Rear Compartment with Upper Storage Compartment and Officer Side Storage Tunnel. Upper Storage Compartment to be fully enclosed drop in / bolt in box with top. Compartment to be full height X full width of opening and 86" deep with a vertical partition located 26" from officer side. Driver side of partition to have a stop located 75" from box opening. Includes smooth plate panels and storage access doors with push button latches. | 5476 |
| 3110-0263 | Lower Rear Compartment with Officer Side Storage Tunnel. Includes smooth plate panels and storage access door with push button latch. Includes bolt-on panel between recessed traffic advisor and lower compartment for rear tank fill. | 1581 |
| 3110-0264 | Lower rear stainless steel tall compartment B1 46" wide x 60" high x 26" deep. Entire rear panel to be smooth FRP plate for Chevron graphics. | 1386 |
| 3110-0265 | Bolt-on diamond plate 16" tailboard full width of body with Bustin Tread. This provides a flat back body design. Includes hand rails (2) vertically on trailing edge of body and horizontally mounted hand rail below hose bed. | 1247 |
| 3110-0266 | Rear end tanker. Includes smooth plate upper and lower panels a smooth plate center strip for a Jet or Newton Dump application driver and officer side access doors for storage tunnels. | 888 |
| 3110-0267 | Upper and Lower Rear Compartment. Includes smooth plate panels. Upper compartment to be as tall as possible (remove traffic advisor platework). | 2749 |
| 3110-0269 | Lower rear stainless steel short and narrow compartment B1 26" wide x 35" high x 26" deep for use with special lower rear panel plumbing options. Includes 46" wide intermediate rear step above. Entire rear panel to be smooth aluminum plate for Chevron graphics. | 1185 |
| 3110-0273 | Full Height Rear Compartment with 4" high permanent diamond plate shelf for a Upper and Lower Rear Compartment design. Includes smooth plate panels. Upper compartment to be as tall as possible (remove traffic advisor platework). | 2749 |
| 3110-0274 | Bolt-on diamond plate 24" tailboard (full width of body). Includes (2) squared off 10" deep beavertails (no stanchions) with removable outer panels and handrails- (2) vertical on trailing edge of body and horizontal mounted handrail(s) below hosebed. For use with swivel style rear tank dump only. | 1252 |
| 3110-0275 | Lower rear stainless steel tall compartment B1 46" wide x approx. 64" high x 34" deep door opening 53" high position. Includes bolt-on intermediate step above the door opening. Entire rear panel to be smooth plate for Chevron graphics. | 1772 |
| 3110-0276 | Lower Rear Compartment with access above to the ladders storage thru tank. Includes smooth plate panels and stepped upper horizontal tube to reduce hosebed height from ground over tank area. | 2180 |
| 3110-0277 | Lower rear stainless steel short compartment B1 46" wide x 40.25" high x 26" deep. Includes bolt-on intermediate step above. Entire rear panel to be smooth aluminum plate for Chevron graphics. | 1176 |
| 3110-0278 | Upper rear body panel below hose bed and above lower compartments to be brushed stainless steel (no chevron). Panel to be full width and includes the area behind the rear discharge pipes. | 209 |
| 3110-0279 | Bolt-on diamond plate 20" tailboard (full width of body). Includes (2) slanted beavertails with lowered height approx 5.5" from standard to inhibit interferance as stowed with beacon lights as optioned (no stanchions) with removable outer panels and handrails- (2) vertical on trailing edge of body and horizontal mounted handrail(s) below hosebed. | 1384 |
| 3110-0280 | Bolt-on diamond plate 20" full width tailboard between rear side compartments with Bustin Tread. Includes hand rails (2) vertically on trailing edge of body and horizontally mounted hand rail below hose bed. Trailing edge of side compartments include 2" deep aluminum treadplate bumperettes to align tailboard to back of body. | 1255 |
| 3110-0281 | Full Height Rear Compartment with Upper Storage Compartment and Side Storage Tunnel. Includes smooth plate panels and storage access doors with "D"-ring latches. | 2411 |
| 3110-0282 | Single low rear compartment. For use with low hosebed. Includes smooth plate panels. B1 compartment 28" deep. | 1084 |
| 3110-0283 | Full Height Rear Compartment with Upper Ladder Storage Compartment. Includes smooth plate panels. Includes area for storage of (1) 24' (1) 14' (1) 10' Attic (2) pike poles and a drop down storage access door with D-Ring latch (wire to door ajar). | 2402 |
| 3110-0284 | Bolt-on diamond plate 18" tailboard (full width of body). Includes (2) slanted beavertails (no stanchions) with removable outer panels and handrails- (2) vertically on trailing edge of body. | 1124 |
| 3110-0285 | The rearend area of the extra wide roof top compartment above the Zico access ladder to be recessed in 16". The stepping area to be embossed diamond plate and side and forward plates to be diamond plate. | 836 |
| 3110-0286 | Full Height Rear Compartment with Upper Storage Compartment and Officer Side Storage Tunnel. Includes smooth plate panels and storage access doors with "D"-ring latches. Divider to be full length and be positioned 27" off of driver side compartment wall or as applicable close to fill tower on water tank. Area to the left of the divider to have a stop and be 84" deep. Area to the right of the divider to have a stop and be 75" deep. | 2447 |

| Item No. | Description | |
|---|---|---|
| 3110-0289 | Pumper rear mount rear end with lower pump panel provisions and upper pump maintenance access door with driver side ladder tunnel. Includes smooth plate panels and storage access doors with D-ring latches. | 1328 |
| 3110-0290 | Bolt-on diamond plate 12" tailboard (full width of body). For use with rear ladder application. Includes handrails- (1) vertical on trailing edge of body opposite side of ladder and handrail(s) horizontal below hosebed. | 1109 |
| 3110-0292 | Rear Panel Compartment. Compartment B1 located centered ahead of the rear tailboard shall be 46" wide x approximately 50" high x 32" deep. Solid walls shall be provided on both sides of the rear compartment. This compartment shall be of 12 gauge 304L stainless steel. | 1393 |
| 3110-0293 | Bolt-on diamond plate 12" tailboard full width of body with Bustin Tread. This provides a flat back body design. Includes hand rails (2) vertically on trailing edge of body and NO horizontally mounted hand rail below hose bed. | 1097 |
| 3110-0294 | Lower rear stainless steel short compartment B1 46" wide x 35" high x 26" deep without an intermediate rear step for hinged doors. Entire rear panel to be smooth aluminum plate for Chevron graphics. | 940 |
| 3110-0296 | Lower Rear Compartment only. Upper section to be smooth plate panel. Includes smooth plate panels. | 1176 |
| 3110-0297 | HS pumper / rescue pumper rear body. Includes center radiator mesh and smooth plate panels. | 1672 |
| 3110-0298 | Full Height Rear Compartment with Upper Ladder Storage Compartment. Includes smooth plate panels. Includes area for storage of (1) 28' (1) 14' (1) 10' Attic (1) Dry wall hook (2) pike poles and a drop down storage access door with push buton latches (wire to door ajar). | 2318 |
| 3110-0299 | 1" X 1.5" extrusion added to lower B1 compartment door opening to form a 10" wide notch offset to officer side for 5" LDH hose connected to customer supplied and installed valve stored in B1. This will also require floor mounted rollout tray to be raised to clear lower door opening. | 394 |
| 3110-0300 | Full Height Rear Pump Panel Compartment with officer side ladder tunnel storage with smooth plate door secured with D-Ring style latch. Includes smooth plate panels angled rear body with flip down tailboard and handrails as applicable. Pump Panels to be recessed in the rear body and enclosed on all sides. | 5780 |
| 3110-0301 | Bolt-on diamond plate 10" tailboard (full width of body) with center integral slide-out step. Includes handrails- (1) vertical on trailing edge of body opposite side of ladder and handrail(s) horizontal below hosebed. | 2234 |
| 3110-0302 | Full Height Rear Compartment with Upper Ladder Storage Compartment. Includes smooth plate panels. Includes area for storage of (1) 24' (1) 14' (1) 10' Attic (2) NY Roof Hook style pike poles and a drop down storage access door with push buton latches (wire to door ajar). | 2318 |
| 3110-0303 | Full Height Rear Compartment with Driver and Officer Side Storage Tunnels. Includes smooth plate panels and storage access doors with push button latches tied to door ajar. Rear compartment to be dual purpose and equipped with a 22" wide door opening on the driver side and a rear body panel added in the remaining space for a rear slam strip to accommodate a jet dump and a direct tank fill in the lower officer side area of the rear compartment. Upper area above slam strip to include a vertical hinged access door of smooth plate aluminum matching rear of body selected finish with stainless steel hinge push button latch and rubber impact bumper to cushion door on handrail in open position. | 2947 |
| 3110-0304 | Full Height Rear Pump Panel Compartment. Includes smooth plate panels angled rear body with flip down tailboard and handrails as applicable. Pump Panels to be recessed in the rear body and enclosed on all sides. | 5564 |
| 3110-0305 | Lower rear stainless steel tall compartment B1 46" wide x 45" high x 26" deep without intermediate step above. Entire rear panel to be smooth aluminum plate for Chevron graphics. | 1124 |
| 3110-0306 | Lower Rear Compartment with Officer Side Storage Tunnel. Includes smooth plate panels and storage access door with "D"-ring. | 1394 |
| 3110-0308 | Upper rear stainless steel short compartment B2 39" wide x 12" high x 26" deep. Entire rear panel to be smooth FRP plate for Chevron graphics. | 949 |
| 3110-0309 | Bolt-on 3/16" (.1875") smooth plate painted black Durabak 10" tailboard (full width of body). For use with rear ladder application. Includes handrails- (1) vertical on trailing edge of body opposite side of ladder and handrail(s) horizontal below hosebed. | 1278 |
| 3110-0310 | Full height rear compartment with upper ladder storage compartment. Includes smooth plate panels. Includes area for storage of (1) 24'(1)14'(1)10' attic (3) pike poles including (1) one each 6' 8' and 10' with APH style hooks a lift up storage access door with hold open springs and push button latches (wire to door ajar) note door to open up 90 degrees. There shall be label 'DO NOT STEP' to be applied "upside down" as viewed from the ground at the bottom of the lift-up door. | 2543 |
| 3110-0311 | Bolt-on diamond plate tailboard (full width of rear compartment). 20" tailboard to run full width of body ("T" shaped tailboard). Includes the extended side compartment frame work and handrails- (2) vertical on trailing edge of body and horizontal mounted handrail(s) below hosebed. | 1949 |
| 3110-0312 | Bolt-on diamond plate 18" tailboard (full width of body). Includes (2) slanted beavertails (no stanchions) with removable outer smooth plate panels painted job color and handrails- (2) vertically on trailing edge of body and horizontally mounted handrail(s) below hosebed. | 2133 |

| Item No. | Description | |
|---|---|---|
| 3110-0313 | Full Height Rear Compartment with Driver Side Storage Tunnel. Includes smooth plate panels and storage access door with D-ring latch. | 1309 |
| 3110-0314 | Rear flip down tailboard to be painted Durabak black. Includes indicator in cab when the tailboard is in the down position. Includes handrails- (2) vertically on trailing edge of body and horizontally mounted handrail(s) below hosebed. | 5152 |
| 3110-0315 | Upper rear compartment depth to be approximately 40" deep. | 306 |
| 3110-0316 | Lower Rear Compartment only 46" wide opening. Upper section to be smooth plate panel. Includes smooth plate panels. | 1357 |
| 3110-0317 | Rear flip down tailboard. Includes indicator in cab when the tailboard is in the down position. Includes handrails- (1) vertical on trailing edge of body opposite side of ladder and handrail(s) horizontal below hosebed. | 4122 |
| 3110-0318 | Upper and lower rear compartment. Includes smooth plate panels. For use with raised lower rear body (B1 is 29" high). | 1935 |
| 3110-0320 | Full Height Rear Compartment with Officer Side Storage Tunnel. Rear tank fill to terminate above rear compartment thru a bolt-on access panel. Includes smooth plate panels and storage access door with push button latch. | 1672 |
| 3110-0324 | Full Height Rear Compartment with Driver Side Storage Tunnel. Includes smooth plate panels and storage access door with "D"-ring latch. | 1264 |
| 3110-0325 | Bolt-on diamond plate tailboard (full width of rear compartment). Includes the rear beavertail compartments and handrails- (2) vertical on trailing edge of body and horizontal mounted handrail(s) below hosebed. | 2554 |
| 3110-0326 | Bolt-on diamond plate tailboard (full width of rear compartment). Additional 10" of tailboard to run full width of body ("T" shaped tailboard). Includes the enhanced extended side compartment frame work and handrails- (2) vertical on trailing edge of body. Does not include the horizontal handrail. | 2554 |
| 3110-0327 | Rear body panels to be upgraded from smooth aluminum plate to aluminum treadplate. This includes the doors for ladder and storage tunnels (if applicable). For use with dealer/customer installed rear panel chevron. | 741 |
| 3110-0328 | Bolt-on diamond plate 16" tailboard with Bustin Tread (full width of body). Includes (2) slanted beavertails and hand rails (2) vertically on trailing edge of body and horizontally mounted hand rail below hose bed. | 1001 |
| 3110-0329 | Full Height Rear Compartment with Upper Ladder Storage Compartment. Includes smooth plate panels. Includes area for storage of (1) 24 '/ 2section (1) 16' roof (1) 10' Attic (3) pike poles with a drop down storage access door with push button latches (wire to door ajar). | 2368 |
| 3110-0330 | Single low rear compartment. B1 compartment to be 30" deep and non transverse. For use with low hosebed. Includes smooth plate panels. | 1084 |
| 3110-0331 | Lower rear stainless steel short compartment B1 between full length chassis frame rails with drop-down door 26.5" wide x 14.5" high x 26" deep. Includes bolt-on intermediate step above. Entire rear panel to be smooth aluminum plate for Chevron graphics. | 960 |
| 3110-0332 | Bolt-on diamond plate 10" tailboard (full width of body). Includes (2) squared off beavertails (no stanchions) with removable outer panels and handrails- (2) vertical on trailing edge of body and horizontal mounted handrail(s) below hosebed. | 1927 |
| 3110-0333 | Enclosed Rear Pump Panel on Rear Mount. Includes 40" wide pump panel opening. Upper module area to have embossed diamond plate top. | 1897 |
| 3110-0334 | Bolt-on diamond plate 14" tailboard (full width of body). For use with rear ladder application. Includes handrails- (1) mounted vertical on trailing edge of body opposite side of ladder and handrail(s) horizontal below hosebed. Gator grip to be on each end outboard of the rear pump panel enclosure. | 1176 |
| 3110-0335 | Rear Compartment between frame rails. Includes bottom hinged drop-down access door using a D-ring latch (wire to door ajar). | 1065 |
| 3110-0336 | The rearend area of the extra wide roof top compartment above the Zico access ladder to be recessed in 16". The stepping surface to be embossed diamond plate side plates to be diamond plate and forward plate to be sanded smooth plate. | 836 |
| 3110-0337 | Full Height Rear Compartment with Officer Side Combination Storage Tunnel. Includes smooth plate panels and storage access doors with d-ring latches. | 2886 |
| 3110-0338 | Full Height Rear Compartment with Upper Ladder Storage Compartment. Includes smooth plate panels. Includes area for storage of (1) 24' (1) 14' (1) 10' Attic (3) pike poles and a drop down storage access door with push button latches (wire to door ajar). | 2500 |
| 3110-0339 | Bolt-on diamond plate 14" tailboard (full width of body). For use without a rear ladder application. Includes handrails- (2) mounted vertical on trailing edge of body and handrail(s) horizontal below hosebed. | 1176 |
| 3110-0342 | Lower rear stainless steel compartment B1 24" wide x 20" high x 26" deep located between full length chassis frame rails. For use with special lower rear panel plumbing options with a low hose bed design. Entire rear panel to be smooth aluminum plate for Chevron graphics. No intermediate step above. | 947 |
| 3110-0344 | Rear body panels to be upgraded from smooth aluminum plate to painted smooth FRP. | 303 |

| Item No. | Description | |
|---|---|---|
| 3110-0345 | Full Height Rear Compartment with Officer Side Storage Tunnel. Includes smooth plate panels and storage access door with push button latch. The B1 compartment to be 40" wide full depth (no compartment break) and as tall as possible. | 1264 |
| 3110-0346 | The rearend area of the extra wide roof top compartment above the Zico access ladder to be recessed in 16in. The stepping area to be embossed diamond plate and side and forward plates to be smooth plate painted job color. | 1006 |
| 3110-0348 | Bolt-on diamond plate 22" tailboard with Bustin Tread (full width of body). Includes (2) squared off beavertails with hand rails (2) vertically on trailing edge of body and horizontally mounted hand rail below hose bed. | 1174 |
| 3110-0352 | Bolt-on diamond plate tailboard (full width of driver side hosebed to officer side rear compartment). Includes the enhanced extended officer side compartment frame work. Driver side includes (1) upper hosebed mounted handrail (as applicable) and handrails- (2) vertically on trailing edge of body and horizontally mounted handrail(s) below hosebed. | 948 |
| 3110-0353 | Bolt-on diamond plate 22" full width tailboard between rear side compartments with Bustin Tread. Includes hand rails (2) vertically on trailing edge of body and horizontally mounted hand rail below hose bed. Trailing edge of side compartments include 4" deep aluminum treadplate bumperettes to align tailboard to back of body. | 1255 |
| 3110-0354 | Lower rear stainless steel short compartment B1 transverse access 46" wide x 35" high x 26" deep. Includes bolt-on intermediate step above. Entire rear panel to be smooth aluminum plate for Chevron graphics. | 1176 |
| 3110-0355 | Angled (Boston style) style tailboard corners. 8" x 8" cutouts to be provided. | 506 |
| 3110-0356 | Bolt-on diamond plate tailboard 10 in. (full width of Body). Includes hose bed structure extended to rear of body over side enhanced compartments for a smooth back body and provide a max depth B1 compartment as optioned. With handrails- (2) vertical on trailing edge of body or (1) if a Zico ladder is equipped and horizontal mounted handrail(s) below hosebed. | 2679 |
| 3110-0357 | Single low rear compartment. For use with low hosebed. Includes smooth plate panels. | 1084 |
| 3110-0359 | LINE-X package for welded (exterior surface only) bolt on (exterior surface only) or flip down style (exterior and interior surfaces) tailboards. Includes rear bumper overlay or E-ONE fabricated boxes mounted on the tailboard as applicable. | 287 |
| 3110-0361 | Lower rear stainless steel short and narrow compartment B1 46" wide x 30" high x 28" deep for use with special lower rear panel plumbing options. Left side wall removed to allow for ALS module passage from L3. This compartment shall not have an exterior door opening. Entire rear panel to be smooth aluminum plate for Chevron graphics. | 1185 |
| 3110-0362 | Upper rear stainless steel short/narrow compartment B2 23" wide x 10" high x 43" deep. Includes a 3-sided floor mounted 1/2" thick Poly tray open to the front (door opening). | 1399 |
| 3110-0363 | Full Height Rear Compartment with Full Width Upper Storage Compartment. Includes officer side area for storage of (1) Ice Sled approx. 28"W X 6"H X 86"L with stops set at 88" from inside door opening and a drop down smooth plate storage access door with push buton latches (wire to door ajar). Door to be as wide as B1 compartment opening. Includes driver side area for storage of (2) 6" X 10' Hard Suction Hoses with stops set at 130" from inside door opening and a drop down smooth plate storage access door with push buton latches (wire to door ajar). Includes (1) divider located 30" off officer's side door opening. Includes smooth plate panels. | 2756 |
| 3110-0364 | Bolt-on diamond plate 10" tailboard (full width of body) with center integral slide-out step. Includes handrails- (2) mounted vertical on trailing edge of body and horizontal mounted handrail(s) below hosebed. | 2234 |
| 3110-0365 | Bolt-on diamond plate 12" tailboard (full width of body). For use with folding step application. Includes handrails- (1) vertical on trailing edge of body opposite each side of body and handrail(s) horizontal below hose bed. | 1109 |
| 3110-0366 | Lower rear stainless steel short compartment B1 46" wide x 35" high x 26" deep. Includes bolt-on intermediate step above FULL WIDTH BETWEEN HANDRAILS (less 2" each side for grab rail use). Entire rear panel to be smooth aluminum plate for Chevron graphics. | 1339 |
| 3110-0367 | Bolt-on diamond plate tail board 14 in. (full width of Body). Includes hose bed structure extended to rear of body over side enhanced compartments for a smooth back body and provide a max depth B1 compartment as optioned. With handrails- (2) vertical on trailing edge of body or (1) if a Zico ladder is equipped and horizontal mounted handrail(s) below hosebed. | 2889 |
| 3110-0368 | Full Height Rear Compartment with Upper Ladder Storage Compartment. Includes smooth plate panels. Includes area for storage of (1) 24' (1) 14' (1) 10' Attic (4) pike poles and a drop down storage access door with push button latches (wire to door ajar). | 2318 |
| 3110-0369 | The rearend area of the extra wide roof top compartment above the Zico access ladder to be recessed in 16". The stepping area to be embossed diamond plate and side plates to be diamond plate and the forward plate to be smooth plate. | 836 |
| 3110-0370 | Rear end tanker. Includes smooth plate full width upper and side lower panels and a smooth plate center area for mounting of rear tank inlet(s) application. | 681 |
| 3110-0372 | Full Height Rear Compartment with Upper Ladder Storage Compartment. Includes smooth plate panels. Includes area for storage of (1) 24' (1) 14' (1) 10' Attic (2) pike poles and a drop down storage access door with D-ring latches (wire to door ajar). | 2369 |

| Item No. | Description | |
|---|---|---|
| 3110-0373 | Bolt-on diamond plate 24" tailboard with Bustin Tread (full width of body). Includes (2) slanted beavertails with removable outer panels and hand rails (2) vertically on trailing edge of body and horizontally mounted hand rail below hose bed. | 1240 |
| 3110-0375 | Rear stainless steel extra tall compartment B1 46" wide x 60" high x 26" deep. Includes bolt-on intermediate step above. Entire rear panel to be smooth aluminum plate for Chevron graphics. | 1360 |
| 3110-0376 | Lower rear stainless steel compartment B1 26.5" wide x 14.5" high x 26" deep located between full length chassis frame rails. Entire rear panel to be smooth aluminum plate for Chevron graphics. Does not nclude an intermediate step. Includes a smooth aluminum bottom hinged drop-down door and stainless steel bent D-ring latch. | 1037 |
| 3110-0377 | Full Height Rear Compartment. Includes smooth plate panels. Includes stepped upper horizontal tube to reduce hosebed height from ground over tank area. | 2318 |
| 3110-0378 | Center Slam Strip Rear End with diamond plate center strip for a Jet or Newton Dump application. Includes diamond plate low side panels and diamond plate upper panel(s). Requires rear NFPA striping compatible for diamond plate panels. | 2209 |
| 3110-0379 | Upper Storage Compartment to hold (1) 10' attic ladder (1) 6' pike pole (1) 12' pike pole and (1) 8' NY pike pole and (2) 6" x 10' hard suction hoses. Includes stop bracket included approximately 130" back from opening. An enclosed frontal area shall be included as part of the tunnel design. Storage shall be enclosed with drop down door with D-Ring latch(es). | 838 |
| 3110-0380 | Lower Rear Compartment 40" high with Officer Side Storage Tunnel. Includes smooth plate panels and storage access door with D-Ring latch. | 1394 |
| 3110-0381 | Single low rear compartment. For use with low hosebed. Includes smooth plate panels. | 1084 |
| 3110-0383 | Lower rear stainless steel short compartment B1 46" wide x 35" high x 25" deep (for fuel tank clearance). Includes bolt-on intermediate step above FULL WIDTH BETWEEN HANDRAILS (less 2" each side for grab rail use). Entire rear panel to be smooth aluminum plate for Chevron graphics. | 1339 |
| 3110-0386 | Full Height Rear Compartment with Officer Side Storage Tunnel. Includes smooth plate panels and storage access door with D-Ring. B1 compartment opening to be 34" wide due to officer side tailboard compartment. | 1446 |
| 3110-0387 | The rearward area of the extra wide roof top compartment above the Zico access ladder to be recessed in 16". The stepping surface to be embossed diamond plate side plates to be diamond plate and forward plate to be FRP smooth plate. | 836 |
| 3110-0388 | Full Height Rear Compartment with Officer Side Storage Tunnel. Includes lower smooth plate panels and upper diamond plate panels and storage access door with "D"-ring latch. | 1805 |
| 3110-0389 | Full Height Rear Compartment with Upper Ladder Storage Compartment. Includes smooth plate panels. Includes area for storage of (1) 24' (1) 16' (1) 10' Attic (2) pike poles and a drop down storage access door with push button latches (wire to door ajar). | 2318 |
| 3110-0390 | The rearend area of the extra wide roof top compartment above the folding steps to be recessed in 16". The stepping area to be embossed diamond plate and side and forward plates to be diamond plate. | 836 |
| 3110-0391 | Bolt-on diamond plate tailboard (full width of rear compartment). Additional 12in. of tailboard to run full width of body ("T" shaped tailboard). Includes the enhanced extended side compartment frame work and handrails- (2) vertical on trailing edge of body as applicable and horizontal mounted handrail(s) below hose bed. | 2554 |
| 3110-0392 | Full Height Rear Compartment with Officer Side Storage Tunnel. Hosebed extrusion to be stepped for storage tunnel if applicable. Includes smooth plate panels and storage access door with D-ring latch. | 1490 |
| 3110-0393 | Full Height Rear Compartment with Officer Side Storage Tunnel. Includes smooth plate panels and horizontally hinged storage access door with push button latch and rubber bumpers. | 1264 |
| 3110-0394 | Single Low Rear Compartment with Upper Storage Compartment and Officer Side Storage Tunnel. For use with low hosebed. Includes smooth plate panels and storage access door with push button latch. | 3364 |
| 3110-0396 | Rear End with no rear compartment and officer side storage tunnel. Includes smooth plate panels and storage access door with d-ring latch. | 879 |
| 3110-0402 | Bolt-on diamond plate tailboard (full width of rear compartment). Additional 7" of tailboard to run full width of body ("T" shaped tailboard). Includes the enhanced extended side compartment frame work and handrails per NFPA requirement. | 2554 |
| 3110-0403 | Handrails extruded aluminum installed full length on outboard top edge of driver roof top compartment lids. | 617 |
| 3110-0404 | Full Height Rear Compartment with Upper Storage Compartment and Officer Side Storage Tunnel. Includes smooth plate panels and storage access doors with push button latches.There shall be smooth plate panels each side of upper storage drop down door for rear discharges. Includes a stop bracket approximately 130" back from opening. | 3138 |
| 3110-0405 | Bolt-on diamond plate 14" tailboard (full width of body). Includes (2) slanted beavertails (no stanchions) with removable outer panels and handrails- (2) vertically on trailing edge of body and horizontally mounted handrail(s) below hosebed. | 1327 |

| Item No. | Description | |
|---|---|---|
| 3110-0406 | Full Height Rear Compartment with Upper Ladder Storage Compartment. Includes smooth plate panels. Includes area for storage of (1) 24' 2-section ladder and a drop down storage access door with push button latches (wire to door ajar). | 2318 |
| 3110-0407 | Single low rear compartment. For use with low hosebed. Includes smooth plate panels. This is a non transverse compartment. | 1084 |
| 3110-0408 | Full Height Rear Compartment with Officer Side Storage Tunnel. Includes smooth plate panels and storage access door with push D-ring style latch. Includes stepped upper horizontal tube to reduce hosebed height from ground over tank area. | 2470 |
| 3120-0000 | Officer half side body with 24" wide forward and 36" wide rearward compartmentation. Includes adjustable ladder tracks. | 4718 |
| 3120-0001 | Officer half side body with 24" wide forward and 50" wide rearward extended compartmentation. Includes adjustable ladder tracks. | 5379 |
| 3120-0003 | Officer half side body with 30" wide forward and 36" wide rearward compartmentation. Includes adjustable ladder tracks. | 5049 |
| 3120-0004 | Officer half side body with 36" wide forward and 36" wide rearward compartmentation. Includes adjustable ladder tracks. | 5404 |
| 3120-0005 | Officer half side body with 42" wide forward and 42" wide rearward compartmentation. Includes adjustable ladder tracks. | 5779 |
| 3120-0006 | Officer half side body with 48" wide forward and 48" wide rearward compartmentation. Includes adjustable ladder tracks. | 6185 |
| 3120-0007 | Officer half side body with 30" wide forward and 50" wide rearward extended compartmentation. Includes adjustable ladder tracks. | 5708 |
| 3120-0008 | Officer half side body with 36" wide forward and 50" wide rearward extended compartmentation. Includes adjustable ladder tracks. | 6062 |
| 3120-0009 | Officer half side body with 42" wide forward and 56" wide rearward extended compartmentation. Includes adjustable ladder tracks. | 6442 |
| 3120-0010 | Officer half side body with 48" wide forward and 62" wide rearward extended compartmentation. Includes adjustable ladder tracks. | 6845 |
| 3120-0011 | Officer half side body with 24" wide forward and 50" wide rearward enhanced extended compartmentation. Includes adjustable ladder tracks. | 5683 |
| 3120-0012 | Officer half side body with 30" wide forward and 50" wide rearward enhanced extended compartmentation. Includes adjustable ladder tracks. | 6010 |
| 3120-0013 | Officer half side body with 36" wide forward and 50" wide rearward enhanced extended compartmentation. Includes adjustable ladder tracks and ladder brackets. | 6363 |
| 3120-0014 | Officer half side body with 42" wide forward and 56" wide rearward enhanced extended compartmentation. Includes adjustable ladder tracks. | 6741 |
| 3120-0015 | Officer half side body with 48" wide forward and 62" wide rearward enhanced extended compartmentation. Includes adjustable ladder tracks. | 7146 |
| 3120-0016 | Officer 3/4 side body with upper and lower compartmentation. Includes 24" wide forward and 36" wide rearward lower compartments and (3) opening upper compartments. | 6368 |
| 3120-0017 | Officer 3/4 side body with full height 24" wide forward and 36" wide rearward compartmentation. Includes (1) 56" wide compartment over the wheel well. | 5898 |
| 3120-0018 | Officer 3/4 side body with upper and lower compartmentation. Includes 30" wide forward and 36" wide rearward lower compartments and (3) opening upper compartments. | 6781 |
| 3120-0019 | Officer 3/4 side body with upper and lower compartmentation. Includes 36" wide forward and 36" wide rearward lower compartments and (3) opening upper compartments. | 7222 |
| 3120-0020 | Officer 3/4 side body with upper and lower compartmentation. Includes 42" wide forward and 42" wide rearward lower compartments and (3) opening upper compartments. | 7694 |
| 3120-0021 | Officer 3/4 side body with upper and lower compartmentation. Includes 48" wide forward and 48" wide rearward lower compartments and (3) opening upper compartments. | 8201 |
| 3120-0022 | Officer 3/4 side body with full height 30" wide forward and 36" wide rearward compartmentation. Includes (1) 56" wide compartment over the wheel well. | 6312 |
| 3120-0023 | Officer 3/4 side body with full height 36" wide forward and 36" wide rearward compartmentation. Includes (1) 56" wide compartment over the wheel well. | 6749 |
| 3120-0024 | Officer 3/4 side body with full height 42" wide forward and 42" wide rearward compartmentation. Includes (1) 56" wide compartment over the wheel well. | 7223 |
| 3120-0025 | Officer 3/4 side body with full height 48" wide forward and 48" wide rearward compartmentation. Includes (1) 56" wide compartment over the wheel well. | 7729 |
| 3120-0026 | Officer 3/4 side body with 24" wide forward and 50" wide rearward extended compartmentation. Includes (1) 56" wide compartment over the wheel well. | 6557 |
| 3120-0027 | Officer 3/4 side body with 30" wide forward and 50" wide rearward extended compartmentation. Includes (1) 56" wide compartment over the wheel well. | 6969 |
| 3120-0028 | Officer 3/4 side body with 36" wide forward and 50" wide rearward extended compartmentation. Includes (1) 56" wide compartment over the wheel well. | 7412 |
| 3120-0029 | Officer 3/4 side body with 42" wide forward and 56" wide rearward extended compartmentation. Includes (1) 56" wide compartment over the wheel well. | 7883 |

| Item No. | Description | |
|---|---|---|
| 3120-0030 | Officer 3/4 side body with 48" wide forward and 62" wide rearward extended compartmentation. Includes (1) 56" wide compartment over the wheel well. | 8390 |
| 3120-0031 | Officer 3/4 side body with 24" wide forward and 50" wide rearward enhanced extended compartmentation. Includes (1) 56" wide compartment over the wheel well. | 6860 |
| 3120-0032 | Officer 3/4 side body with 30" wide forward and 50" wide rearward enhanced extended compartmentation. Includes (1) 56" wide compartment over the wheel well. | 7270 |
| 3120-0033 | Officer 3/4 side body with 36" wide forward and 50" wide rearward enhanced extended compartmentation. Includes (1) 56" wide compartment over the wheel well. | 7711 |
| 3120-0034 | Officer 3/4 side body with 42" wide forward and 50" wide rearward enhanced extended compartmentation. Includes (1) 56" wide compartment over the wheel well. | 8186 |
| 3120-0035 | Officer 3/4 side body with 48" wide forward and 62" wide rearward enhanced extended compartmentation. Includes (1) 56" wide compartment over the wheel well. | 8692 |
| 3120-0036 | Officer side body with full height 24" wide forward and 36" wide rearward compartmentation. Includes (1) 33" wide compartment (forward) over the wheel well and (1) Zico Overhead Ladder Rack. | 16316 |
| 3120-0037 | Officer side body with full height 30" wide forward and 36" wide rearward compartmentation. Includes (1) 33" wide compartment (forward) over the wheel well and (1) Zico Overhead Ladder Rack. | 16975 |
| 3120-0038 | Officer side body with full height 36" wide forward and 36" wide rearward compartmentation. Includes (1) 33" wide compartment (forward) over the wheel well and (1) Zico Overhead Ladder Rack. | 17680 |
| 3120-0039 | Officer side body with full height 42" wide forward and 42" wide rearward compartmentation. Includes (1) 33" wide compartment (forward) over the wheel well and (1) Zico Overhead Ladder Rack. | 18437 |
| 3120-0040 | Officer side body with full height 48" wide forward and 48" wide rearward compartmentation. Includes (1) 33" wide compartment (forward) over the wheel well and (1) Zico Overhead Ladder Rack. | 19243 |
| 3120-0041 | Officer side body with full height 24" wide forward and 50" wide rearward extended compartmentation. Includes (1) 33" wide compartment (forward) over the wheel well and (1) Zico Overhead Ladder Rack. | 16975 |
| 3120-0042 | Officer side body with full height 30" wide forward and 50" wide rearward extended compartmentation. Includes (1) 33" wide compartment (forward) over the wheel well and (1) Zico Overhead Ladder Rack. | 17636 |
| 3120-0043 | Officer side body with full height 36" wide forward and 50" wide rearward extended compartmentation. Includes (1) 33" wide compartment (forward) over the wheel well and (1) Zico Overhead Ladder Rack. | 18341 |
| 3120-0044 | Officer side body with full height 42" wide forward and 56" wide rearward extended compartmentation. Includes (1) 33" wide compartment (forward) over the wheel well and (1) Zico Overhead Ladder Rack. | 19097 |
| 3120-0045 | Officer side body with full height 48" wide forward and 62" wide rearward extended compartmentation. Includes (1) 33" wide compartment (forward) over the wheel well and (1) Zico Overhead Ladder Rack. | 19905 |
| 3120-0046 | Officer side body with full height 24" wide forward and 50" wide rearward enhanced extended compartmentation. Includes (1) 33" wide compartment (forward) over the wheel well and (1) Zico Overhead Ladder Rack. | 17280 |
| 3120-0047 | Officer side body with full height 30" wide forward and 50" wide rearward enhanced extended compartmentation. Includes (1) 33" wide compartment (forward) over the wheel well and (1) Zico Overhead Ladder Rack. | 17937 |
| 3120-0048 | Officer side body with full height 36" wide forward and 50" wide rearward enhanced extended compartmentation. Includes (1) 33" wide compartment (forward) over the wheel well and (1) Zico Overhead Ladder Rack. | 18642 |
| 3120-0049 | Officer side body with full height 42" wide forward and 56" wide rearward enhanced extended compartmentation. Includes (1) 33" wide compartment (forward) over the wheel well and (1) Zico Overhead Ladder Rack. | 19399 |
| 3120-0050 | Officer side body with full height 48" wide forward and 62" wide rearward enhanced extended compartmentation. Includes (1) 33" wide compartment (forward) over the wheel well and (1) Zico Overhead Ladder Rack. | 20206 |
| 3120-0051 | Officer half side body with 36" wide forward and 36" wide rearward compartmentation. Includes adjustable ladder tracks and 30 degree rear body angle for greater angle of departure. | 5415 |
| 3120-0052 | Officer 3/4 side body with full height 24" wide forward and 36" wide rearward compartmentation. Includes (1) 56" wide compartment over the wheel well and 30 degree rear body angle for greater angle of departure. | 10144 |
| 3120-0053 | Officer 3/4 side body with full height 30" wide forward and 36" wide rearward compartmentation. Includes (1) 56" wide compartment over the wheel well and 30 degree rear body angle for greater angle of departure. | 10465 |
| 3120-0054 | Officer 3/4 side body with full height 36" wide forward and 36" wide rearward compartmentation. Includes (1) 56" wide compartment over the wheel well and 30 degree rear body angle for greater angle of departure. | 10787 |
| 3120-0055 | Officer side body with full height 24" wide forward and 36" wide rearward compartmentation. Includes (1) 33" wide compartment (forward) over the wheel well (1) Zico Overhead Ladder Rack and 30 degree rear body angle for greater angle of departure. | 18428 |

| Item No. | Description | |
|---|---|---|
| 3120-0056 | Officer side body with full height 30" wide forward and 36" wide rearward compartmentation. Includes (1) 33" wide compartment (forward) over the wheel well (1) Zico Overhead Ladder Rack and 30 degree rear body angle for greater angle of departure. | 18749 |
| 3120-0057 | Officer side body with full height 36" wide forward and 36" wide rearward compartmentation. Includes (1) 33" wide compartment (forward) over the wheel well (1) Zico Overhead Ladder Rack and 30 degree rear body angle for greater angle of departure. | 19070 |
| 3120-0058 | Stainless steel officer half side body with 48" wide forward and 48" wide rearward compartmentation (interior). Includes adjustable ladder tracks. | 6801 |
| 3120-0059 | Stainless steel officer half side body with 48" wide forward and 60" wide rearward compartmentation (interior). Includes adjustable ladder tracks. | 7142 |
| 3120-0060 | Stainless steel officer half side body with 60" wide forward and 60" wide rearward compartmentation (interior). Includes adjustable ladder tracks. | 7278 |
| 3120-0061 | Stainless steel officer 3/4 side body with full height 36" wide forward and 48" wide rearward compartmentation (interior). Includes (1) 60" wide compartment over the wheel well. | 7428 |
| 3120-0062 | Stainless steel officer 3/4 side body with full height 48" wide forward and 48" wide rearward compartmentation (interior). Includes (1) 60" wide compartment over the wheel well. | 8500 |
| 3120-0063 | Stainless steel officer 3/4 side body with full height 48" wide forward and 60" wide rearward compartmentation (interior). Includes (1) 60" wide compartment over the wheel well. | 8927 |
| 3120-0064 | Stainless steel officer 3/4 side body with full height 60" wide forward and 60" wide rearward compartmentation (interior). Includes (1) 60" wide compartment over the wheel well. | 9095 |
| 3120-0065 | Stainless steel officer side body with full height 36" wide forward and 48" wide rearward compartmentation (interior). Includes (1) 45" wide compartment (rearward) over the wheel well and (1) Zico Overhead Ladder Rack. | 19450 |
| 3120-0066 | Stainless steel officer side body with full height 48" wide forward and 48" wide rearward compartmentation (interior). Includes (1) 45" wide compartment (rearward) over the wheel well and (1) Zico Overhead Ladder Rack. | 21168 |
| 3120-0067 | Stainless steel officer side body with full height 48" wide forward and 60" wide rearward compartmentation (interior). Includes (1) 45" wide compartment (rearward) over the wheel well and (1) Zico Overhead Ladder Rack. | 24173 |
| 3120-0068 | Stainless steel officer side body with full height 60" wide forward and 60" wide rearward compartmentation (interior). Includes (1) 45" wide compartment (rearward) over the wheel well and (1) Zico Overhead Ladder Rack. | 22119 |
| 3120-0069 | Stainless steel officer side body with full height 48" wide forward and 60" wide rearward compartmentation (interior). Includes (1) 60" wide compartment over the wheel well. For use with in the hosebed area ladder storage. | 14279 |
| 3120-0070 | Stainless steel officer side body with full height 60" wide forward and 60" wide rearward compartmentation (interior). Includes (1) 60" wide compartment over the wheel well. For use with in the hosebed area or thru the tank ladder storage. | 14552 |
| 3120-0080 | Officer side body with full height 36" wide forward and 36" wide rearward compartmentation. Includes (1) 33" wide compartment (forward) over the wheel well and (1) Zico Overhead Ladder Rack. | 18918 |
| 3120-0081 | Officer side body with full height 42" wide forward and 42" wide rearward compartmentation. Includes (1) 33" wide compartment (forward) over the wheel well and (1) Zico Overhead Ladder Rack. | 19727 |
| 3120-0082 | Officer side body with full height 48" wide forward and 48" wide rearward compartmentation. Includes (1) 33" wide compartment (forward) over the wheel well and (1) Zico Overhead Ladder Rack. | 20594 |
| 3120-0083 | Officer side body with full height 36" wide forward and 36" wide rearward compartmentation. Includes (1) 56" wide compartment over the wheel well and one (1)ladder storage tunnel and access door at rear. | 14618 |
| 3120-0084 | Officer side body with full height 42" wide forward and 42" wide rearward compartmentation. Includes (1) 56" wide compartment over the wheel well and one (1)ladder storage tunnel and access door at rear. | 15426 |
| 3120-0085 | Officer side body with full height 48" wide forward and 48" wide rearward compartmentation. Includes (1) 56" wide compartment over the wheel well and one (1)ladder storage tunnel and access door at rear. | 16291 |
| 3120-0086 | Officer side body with full height 42" wide forward and 42" wide rearward compartmentation. Includes (1) 56" wide compartment over the wheel well. | 12362 |
| 3120-0087 | Officer side body with full height 48" wide forward and 48" wide rearward compartmentation. Includes (1) 56" wide compartment over the wheel well. For use with thru the tank ladder. | 13227 |
| 3120-0088 | Officer side body with full height 60" wide forward and 42" wide rearward compartmentation. Includes (1) 33" wide compartment (forward) over the wheel well and (1) Zico Overhead Ladder Rack. | 21519 |
| 3120-0089 | Officer side body with full height 60" wide forward and 42" wide rearward compartmentation. Includes (1) 56" wide compartment over the wheel well and one (1)ladder storage tunnel and access door at rear. | 17219 |

| Item No. | Description | |
|---|---|---|
| 3120-0090 | Officer side body with full height 60" wide forward and 42" wide rearward compartmentation. Includes (1) 56" wide compartment over the wheel well. For use with thru the tank ladder storage. | 14154 |
| 3120-0091 | Officer half side body with 36" wide rearward compartmentation. Includes adjustable ladder tracks and 30 degree rear body angle for greater angle of departure. | 2722 |
| 3120-0092 | Officer 3/4 side body with full height 36" wide rearward compartmentation. Includes (1) 56" wide compartment over the wheel well and 30 degree rear body angle for greater angle of departure. | 9152 |
| 3120-0093 | Officer half side body with 36" wide rearward compartmentation. Includes adjustable ladder tracks. | 2913 |
| 3120-0094 | Officer 3/4 side body with full height 36" wide rearward compartmentation. Includes (1) 56" wide compartment over the wheel well. | 5374 |
| 3120-0095 | Officer full height side body with upper and lower compartmentation. Includes 42" wide forward and 42" wide rearward lower compartments and (3) opening upper compartments. For use with ladder storage thru tank. | 12027 |
| 3120-0096 | Officer side body with full height 42" wide forward and 42" wide rearward compartmentation. Includes (1) 56" wide compartment over the wheel well. For use with ladder storage thru tank. | 11555 |
| 3120-0097 | Officer full height side body with upper and lower compartmentation. Includes 48" wide forward and 48" wide rearward lower compartments and (3) opening upper compartments. For use with ladder storage thru tank. | 12835 |
| 3120-0098 | Officer side body with full height 48" wide forward and 48" wide rearward compartmentation. Includes (1) 56" wide compartment over the wheel well. For use with ladder storage thru tank. | 12362 |
| 3120-0099 | Officer side body with full height 42" wide forward and 56" wide rearward extended compartmentation. Includes (1) 56" wide compartment over the wheel well. | 12215 |
| 3120-0100 | Officer side body with full height 42" wide forward and 56" wide rearward enhanced extended compartmentation. Includes (1) 56" wide compartment over the wheel well. | 12518 |
| 3120-0101 | Officer side body with full height 48" wide forward and 62" wide rearward extended compartmentation. Includes (1) 56" wide compartment over the wheel well. | 13023 |
| 3120-0102 | Officer side body with full height 48" wide forward and 62" wide rearward enhanced extended compartmentation. Includes (1) 56" wide compartment over the wheel well. | 13325 |
| 3120-0104 | Stainless steel officer 3/4 side body with full height 36" wide forward and 48" wide rearward compartmentation (interior). Includes (1) 60" wide compartment over the wheel well. | 13645 |
| 3120-0105 | Stainless steel officer 3/4 side body with full height 48" wide forward and 48" wide rearward compartmentation (interior). Includes (1) 60" wide compartment over the wheel well. | 14334 |
| 3120-0106 | Stainless steel officer 3/4 side body with full height 60" wide forward and 60" wide rearward compartmentation (interior). Includes (1) 60" wide compartment over the wheel well. | 15711 |
| 3120-0107 | Stainless steel officer 3/4 side body with full height 48" wide forward and 60" wide rearward compartmentation (interior). Includes (1) 60" wide compartment over the wheel well. | 15020 |
| 3120-0108 | Stainless steel officer side body with full height 36" wide forward and 48" wide (interior) rearward compartmentation. Includes (1) 45" wide (interior) compartment (forward) over the wheel well and (1) Zico Overhead Ladder Rack. | 20808 |
| 3120-0109 | Stainless steel officer side body with full height 48" wide forward and 48" wide (interior) rearward compartmentation. Includes (1) 45" wide (interior) compartment (forward) over the wheel well and (1) Zico Overhead Ladder Rack. | 22651 |
| 3120-0110 | Stainless steel officer side body with full height 60" wide forward and 60" wide (interior) rearward compartmentation. Includes (1) 45" wide (interior) compartment (forward) over the wheel well and (1) Zico Overhead Ladder Rack. | 23669 |
| 3120-0111 | Stainless steel officer side body with full height 48" wide forward and 60" wide (interior) rearward compartmentation. Includes (1) 45" wide (interior) compartment (forward) over the wheel well and (1) Zico Overhead Ladder Rack. | 23330 |
| 3120-0112 | Stainless steel officer side body with full height 36" wide forward and 48" wide rearward (interior) compartmentation. Includes (1) 60" wide compartment over the wheel well. For use with in the hosebed ladder storage. | 12708 |
| 3120-0113 | Stainless steel officer side body with full height 48" wide forward and 48" wide rearward (interior) compartmentation. Includes (1) 60" wide compartment over the wheel well. For use with in the hosebed ladder storage. | 14552 |
| 3120-0114 | Stainless steel officer side body with full height 48" wide forward and 60" wide rearward (interior) compartmentation. Includes (1) 60" wide compartment over the wheel well. For use with in the hosebed ladder storage. | 14988 |
| 3120-0115 | Stainless steel officer side body with full height 60" wide forward and 60" wide rearward (interior) compartmentation. Includes (1) 60" wide compartment over the wheel well. For use with in the hosebed ladder storage. | 14552 |
| 3120-0116 | Stainless steel officer side body with full height 36" wide forward and 48" wide (interior) rearward compartmentation. Includes (1) 60" wide compartment over the wheel well and one (1) ladder storage tunnel and access door at rear with push-button latch. | 16510 |

| Item No. | Description | |
|---|---|---|
| 3120-0117 | Stainless steel officer side body with full height 48" wide forward and 48" wide (interior) rearward compartmentation. Includes (1) 60" wide compartment over the wheel well and one (1) ladder storage tunnel and access door at rear with push-button latch. | 18351 |
| 3120-0118 | Stainless steel officer side body with full height 48" wide forward and 60" wide (interior) rearward compartmentation. Includes (1) 60" wide compartment over the wheel well and one (1) ladder storage tunnel and access door at rear with push-button latch. | 19270 |
| 3120-0119 | Stainless steel officer side body with full height 60" wide forward and 60" wide (interior) rearward compartmentation. Includes (1) 60" wide compartment over the wheel well and one (1) ladder storage tunnel and access door at rear with push-button latch. | 19368 |
| 3120-0121 | Officer side body with full height 36" wide forward and 36" wide rearward compartmentation. Includes (1) 56" wide compartment over the wheel well. | 11496 |
| 3120-0123 | Officer half side body with 60" wide forward and 42" wide rearward compartmentation. Includes adjustable ladder tracks. | 6617 |
| 3120-0124 | Officer 3/4 side body with full height 60" wide forward and 42" wide rearward compartmentation. Includes (1) 56" wide compartment over the wheel well. | 8270 |
| 3120-0125 | Officer 3/4 side body with upper and lower compartmentation. Includes 60" wide forward and 42" wide rearward lower compartments and (3) opening upper compartments. | 8773 |
| 3120-0126 | Officer side body with full height 60" wide forward and 42" wide rearward compartmentation. Includes (1) 56" wide compartment over the wheel well. For use with ladder storage thru tank. | 13227 |
| 3120-0127 | Officer full height side body with upper and lower compartmentation. Includes 60" wide forward and 42" wide rearward lower compartments and (3) opening upper compartments. For use with ladder storage thru tank. | 13732 |
| 3120-0128 | Officer side body with full height 60" wide forward and 42" wide rearward compartmentation. Includes (1) 33" wide compartment (forward) over the wheel well and (1) Zico Overhead Ladder Rack. | 19727 |
| 3120-0132 | Officer side body with full height 30" wide forward and 50" wide rearward extended compartmentation. Includes (1) 56" wide compartment over the wheel well and (1) 2-Arm Ladder Rack. The ladder rack is to be painted job color and includes amber lights on each end to visually indicate when the rack is in motion. | 31404 |
| 3120-0135 | Officer side body with full height 36" wide forward and 36" wide rearward compartmentation. Includes (1) 56" wide compartment over the wheel well. For use with over the hosebed storage rack. | 10812 |
| 3120-0138 | Officer 3/4 side body with upper and lower compartmentation. Includes 24" wide forward and 36" wide rearward lower compartments and (3) opening upper compartments. | 6368 |
| 3120-0139 | Officer 3/4 side body with full height 24" wide forward and 36" wide rearward compartmentation. Includes (1) 56" wide compartment over the wheel well. | 5898 |
| 3120-0140 | Officer 3/4 side body with upper and lower compartmentation. Includes 30" wide forward and 36" wide rearward lower compartments and (3) opening upper compartments. | 6781 |
| 3120-0141 | Officer 3/4 side body with upper and lower compartmentation. Includes 36" wide forward and 36" wide rearward lower compartments and (3) opening upper compartments. | 7222 |
| 3120-0142 | Officer 3/4 side body with upper and lower compartmentation. Includes 42" wide forward and 42" wide rearward lower compartments and (3) opening upper compartments. | 7694 |
| 3120-0143 | Officer 3/4 side body with upper and lower compartmentation. Includes 48" wide forward and 48" wide rearward lower compartments and (3) opening upper compartments. | 8201 |
| 3120-0144 | Officer 3/4 side body with full height 30" wide forward and 36" wide rearward compartmentation. Includes (1) 56" wide compartment over the wheel well. | 6312 |
| 3120-0145 | Officer 3/4 side body with full height 36" wide forward and 36" wide rearward compartmentation. Includes (1) 56" wide compartment over the wheel well. | 6749 |
| 3120-0146 | Officer 3/4 side body with full height 42" wide forward and 42" wide rearward compartmentation. Includes (1) 56" wide compartment over the wheel well. | 7223 |
| 3120-0147 | Officer 3/4 side body with full height 48" wide forward and 48" wide rearward compartmentation. Includes (1) 56" wide compartment over the wheel well. | 7729 |
| 3120-0148 | Officer 3/4 side body with 24" wide forward and 50" wide rearward extended compartmentation. Includes (1) 56" wide compartment over the wheel well. | 6557 |
| 3120-0149 | Officer 3/4 side body with 30" wide forward and 50" wide rearward extended compartmentation. Includes (1) 56" wide compartment over the wheel well. | 6969 |
| 3120-0150 | Officer 3/4 side body with 36" wide forward and 50" wide rearward extended compartmentation. Includes (1) 56" wide compartment over the wheel well. | 7412 |
| 3120-0151 | Officer 3/4 side body with 42" wide forward and 56" wide rearward extended compartmentation. Includes (1) 56" wide compartment over the wheel well. | 7883 |
| 3120-0152 | Officer 3/4 side body with 48" wide forward and 62" wide rearward extended compartmentation. Includes (1) 56" wide compartment over the wheel well. | 8390 |
| 3120-0153 | Officer 3/4 side body with 24" wide forward and 50" wide rearward enhanced extended compartmentation. Includes (1) 56" wide compartment over the wheel well. | 6860 |
| 3120-0154 | Officer 3/4 side body with 30" wide forward and 50" wide rearward enhanced extended compartmentation. Includes (1) 56" wide compartment over the wheel well. | 7270 |

| Item No. | Description | |
|---|---|---|
| 3120-0155 | Officer 3/4 side body with 36" wide forward and 50" wide rearward enhanced extended compartmentation. Includes (1) 56" wide compartment over the wheel well. | 7711 |
| 3120-0156 | Officer 3/4 side body with 42" wide forward and 56" wide rearward enhanced extended compartmentation. Includes (1) 56" wide compartment over the wheel well. | 8186 |
| 3120-0157 | Officer 3/4 side body with 48" wide forward and 62" wide rearward enhanced extended compartmentation. Includes (1) 56" wide compartment over the wheel well. | 8692 |
| 3120-0158 | Officer side body with full height 24" wide forward and 36" wide rearward compartmentation. Includes (1) 33" wide compartment over the wheel well and (1) Zico Overhead Ladder Rack. | 16316 |
| 3120-0159 | Officer side body with full height 30" wide forward and 36" wide rearward compartmentation. Includes (1) 33" wide compartment over the wheel well and (1) Zico Overhead Ladder Rack. | 16975 |
| 3120-0160 | Officer side body with full height 36" wide forward and 36" wide rearward compartmentation. Includes (1) 33" wide compartment over the wheel well and (1) Zico Overhead Ladder Rack. | 17680 |
| 3120-0161 | Officer side body with full height 42" wide forward and 42" wide rearward compartmentation. Includes (1) 33" wide compartment over the wheel well and (1) Zico Overhead Ladder Rack. | 18437 |
| 3120-0162 | Officer side body with full height 48" wide forward and 48" wide rearward compartmentation. Includes (1) 33" wide compartment over the wheel well and (1) Zico Overhead Ladder Rack. | 19243 |
| 3120-0163 | Officer side body with full height 24" wide forward and 50" wide rearward extended compartmentation. Includes (1) 33" wide compartment over the wheel well and (1) Zico Overhead Ladder Rack. | 16975 |
| 3120-0164 | Officer side body with full height 30" wide forward and 50" wide rearward extended compartmentation. Includes (1) 33" wide compartment over the wheel well and (1) Zico Overhead Ladder Rack. | 17636 |
| 3120-0165 | Officer side body with full height 36" wide forward and 50" wide rearward extended compartmentation. Includes (1) 33" wide compartment over the wheel well and (1) Zico Overhead Ladder Rack. | 18341 |
| 3120-0166 | Officer side body with full height 42" wide forward and 56" wide rearward extended compartmentation. Includes (1) 33" wide compartment over the wheel well and (1) Zico Overhead Ladder Rack. | 19097 |
| 3120-0167 | Officer side body with full height 48" wide forward and 62" wide rearward extended compartmentation. Includes (1) 33" wide compartment over the wheel well and (1) Zico Overhead Ladder Rack. | 19905 |
| 3120-0168 | Officer side body with full height 24" wide forward and 50" wide rearward enhanced extended compartmentation. Includes (1) 33" wide compartment over the wheel well and (1) Zico Overhead Ladder Rack. | 17280 |
| 3120-0169 | Officer side body with full height 30" wide forward and 50" wide rearward enhanced extended compartmentation. Includes (1) 33" wide compartment over the wheel well and (1) Zico Overhead Ladder Rack. | 17937 |
| 3120-0170 | Officer side body with full height 36" wide forward and 50" wide rearward enhanced extended compartmentation. Includes (1) 33" wide compartment over the wheel well and (1) Zico Overhead Ladder Rack. | 18642 |
| 3120-0171 | Officer side body with full height 42" wide forward and 56" wide rearward enhanced extended compartmentation. Includes (1) 33" wide compartment over the wheel well and (1) Zico Overhead Ladder Rack. | 19399 |
| 3120-0172 | Officer side body with full height 48" wide forward and 62" wide rearward enhanced extended compartmentation. Includes (1) 33" wide compartment over the wheel well and (1) Zico Overhead Ladder Rack. | 20206 |
| 3120-0173 | Officer 3/4 side body with full height 24" wide forward and 36" wide rearward compartmentation. Includes (1) 56" wide compartment over the wheel well and 30 degree rear body angle for greater angle of departure. | 10144 |
| 3120-0174 | Officer 3/4 side body with full height 30" wide forward and 36" wide rearward compartmentation. Includes (1) 56" wide compartment over the wheel well and 30 degree rear body angle for greater angle of departure. | 10465 |
| 3120-0175 | Officer 3/4 side body with full height 36" wide forward and 36" wide rearward compartmentation. Includes (1) 56" wide compartment over the wheel well and 30 degree rear body angle for greater angle of departure. | 10787 |
| 3120-0176 | Officer side body with full height 24" wide forward and 36" wide rearward compartmentation. Includes (1) 33" wide compartment over the wheel well and (1) Zico Overhead Ladder Rack. Rear bottom corner of truck will be angled 30 degrees for a greater rear angle of departure. | 18428 |
| 3120-0177 | Officer side body with full height 30" wide forward and 36" wide rearward compartmentation. Includes (1) 33" wide compartment over the wheel well (1) Zico Overhead Ladder Rack and 30 degree rear body angle for greater angle of departure. | 18749 |
| 3120-0178 | Officer side body with full height 36" wide forward and 36" wide rearward compartmentation. Includes (1) 33" wide compartment over the wheel well (1) Zico Overhead Ladder Rack and 30 degree rear body angle for greater angle of departure. | 19070 |
| 3120-0179 | Stainless steel officer 3/4 side body with full height 36" wide forward and 48" wide rearward compartmentation (interior). Includes (1) 60" wide compartment over the wheel well. | 7428 |

| Item No. | Description | |
|---|---|---|
| 3120-0180 | Stainless steel officer 3/4 side body with full height 48" wide forward and 48" wide rearward compartmentation (interior). Includes (1) 60" wide compartment over the wheel well. | 8500 |
| 3120-0181 | Stainless steel officer 3/4 side body with full height 48" wide forward and 60" wide rearward compartmentation (interior). Includes (1) 60" wide compartment over the wheel well. | 8927 |
| 3120-0182 | Stainless steel officer 3/4 side body with full height 60" wide forward and 60" wide rearward compartmentation (interior). Includes (1) 60" wide compartment over the wheel well. | 9095 |
| 3120-0183 | Stainless steel officer side body with full height 36" wide forward and 48" wide rearward compartmentation (interior). Includes (1) 45" wide compartment over the wheel well and (1) Zico Overhead Ladder Rack. | 19450 |
| 3120-0184 | Stainless steel officer side body with full height 48" wide forward and 48" wide rearward compartmentation (interior). Includes (1) 45" wide compartment over the wheel well and (1) Zico Overhead Ladder Rack. | 21168 |
| 3120-0185 | Stainless steel officer side body with full height 48" wide forward and 60" wide rearward compartmentation (interior). Includes (1) 45" wide compartment over the wheel well and (1) Zico Overhead Ladder Rack. | 24173 |
| 3120-0186 | Stainless steel officer side body with full height 60" wide forward and 60" wide rearward compartmentation (interior). Includes (1) 45" wide compartment over the wheel well and (1) Zico Overhead Ladder Rack. | 22119 |
| 3120-0187 | Stainless steel officer side body with full height 48" wide forward and 60" wide rearward compartmentation (interior). Includes (1) 60" wide compartment over the wheel well. For use with in the hosebed area ladder storage. | 14279 |
| 3120-0188 | Stainless steel officer side body with full height 60" wide forward and 60" wide rearward compartmentation (interior). Includes (1) 60" wide compartment over the wheel well. For use with in the hosebed area or thru the tank ladder storage. | 14552 |
| 3120-0189 | Officer side body with full height 36" wide forward and 36" wide rearward compartmentation. Includes (1) 33" wide compartment over the wheel well and (1) Zico Overhead Ladder Rack. | 18918 |
| 3120-0190 | Officer side body with full height 42" wide forward and 42" wide rearward compartmentation. Includes (1) 33" wide compartment over the wheel well and (1) Zico Overhead Ladder Rack. | 19727 |
| 3120-0191 | Officer side body with full height 48" wide forward and 48" wide rearward compartmentation. Includes (1) 33" wide compartment over the wheel well and (1) Zico Overhead Ladder Rack. | 20594 |
| 3120-0192 | Officer side body with full height 36" wide forward and 36" wide rearward compartmentation. Includes (1) 56" wide compartment over the wheel well and one (1) storage tunnel. | 14618 |
| 3120-0193 | Officer side body with full height 42" wide forward and 42" wide rearward compartmentation. Includes (1) 56" wide compartment over the wheel well and one (1) storage tunnel. | 15426 |
| 3120-0194 | Officer side body with full height 48" wide forward and 48" wide rearward compartmentation. Includes (1) 56" wide compartment over the wheel well and one (1) storage tunnel. | 16291 |
| 3120-0195 | Officer side body with full height 42" wide forward and 42" wide rearward compartmentation. Includes (1) 56" wide compartment over the wheel well. | 12362 |
| 3120-0196 | Officer side body with full height 48" wide forward and 48" wide rearward compartmentation. Includes (1) 56" wide compartment over the wheel well. | 13227 |
| 3120-0197 | Officer side body with full height 60" wide forward and 42" wide rearward compartmentation. Includes (1) 33" wide compartment over the wheel well and (1) Zico Overhead Ladder Rack. | 21519 |
| 3120-0198 | Officer side body with full height 60" wide forward and 42" wide rearward compartmentation. Includes (1) 56" wide compartment over the wheel well and one (1) storage tunnel. | 17219 |
| 3120-0199 | Officer side body with full height 60" wide forward and 42" wide rearward compartmentation. Includes (1) 56" wide compartment over the wheel well. | 14154 |
| 3120-0200 | Officer 3/4 side body with full height 36" wide rearward compartmentation. Includes (1) 56" wide compartment over the wheel well and 30 degree rear body angle for greater angle of departure. | 9152 |
| 3120-0201 | Officer 3/4 side body with full height 36" wide rearward compartmentation. Includes (1) 56" wide compartment over the wheel well. | 5374 |
| 3120-0202 | Officer full height side body with upper and lower compartmentation. Includes 42" wide forward and 42" wide rearward lower compartments and (3) opening upper compartments. For use with ladder storage thru tank. | 12027 |
| 3120-0203 | Officer side body with full height 42" wide forward and 42" wide rearward compartmentation. Includes (1) 56" wide compartment over the wheel well. | 11555 |
| 3120-0204 | Officer full height side body with upper and lower compartmentation. Includes 48" wide forward and 48" wide rearward lower compartments and (3) opening upper compartments. For use with ladder storage thru tank. | 12835 |
| 3120-0205 | Officer side body with full height 48" wide forward and 48" wide rearward compartmentation. Includes (1) 56" wide compartment over the wheel well. | 12362 |
| 3120-0206 | Officer side body with full height 42" wide forward and 56" wide rearward extended compartmentation. Includes (1) 56" wide compartment over the wheel well. | 12215 |
| 3120-0207 | Officer side body with full height 42" wide forward and 56" wide rearward enhanced extended compartmentation. Includes (1) 56" wide compartment over the wheel well. | 12518 |
| 3120-0208 | Officer side body with full height 48" wide forward and 62" wide rearward extended compartmentation. Includes (1) 56" wide compartment over the wheel well. | 13023 |

| Item No. | Description | |
|---|---|---|
| 3120-0209 | Officer side body with full height 48" wide forward and 62" wide rearward enhanced extended compartmentation. Includes (1) 56" wide compartment over the wheel well. | 13325 |
| 3120-0210 | Stainless steel officer 3/4 side body with full height 36" wide forward and 48" wide rearward compartmentation (interior). Includes (1) 60" wide compartment over the wheel well. | 13645 |
| 3120-0211 | Stainless steel officer 3/4 side body with full height 48" wide forward and 48" wide rearward compartmentation (interior). Includes (1) 60" wide compartment over the wheel well. | 14334 |
| 3120-0212 | Stainless steel officer 3/4 side body with full height 60" wide forward and 60" wide rearward compartmentation (interior). Includes (1) 60" wide compartment over the wheel well. | 15711 |
| 3120-0213 | Stainless steel officer 3/4 side body with full height 48" wide forward and 60" wide rearward compartmentation (interior). Includes (1) 60" wide compartment over the wheel well. | 15020 |
| 3120-0214 | Stainless steel officer side body with full height 36" wide forward and 48" wide (interior) rearward compartmentation. Includes (1) 45" wide (interior) compartment over the wheel well and (1) Zico Overhead Ladder Rack. | 20808 |
| 3120-0215 | Stainless steel officer side body with full height 48" wide forward and 48" wide (interior) rearward compartmentation. Includes (1) 45" wide (interior) compartment over the wheel well and (1) Zico Overhead Ladder Rack. | 22651 |
| 3120-0216 | Stainless steel officer side body with full height 60" wide forward and 60" wide (interior) rearward compartmentation. Includes (1) 45" wide (interior) compartment over the wheel well and (1) Zico Overhead Ladder Rack. | 23669 |
| 3120-0217 | Stainless steel officer side body with full height 48" wide forward and 60" wide (interior) rearward compartmentation. Includes (1) 45" wide (interior) compartment over the wheel well and (1) Zico Overhead Ladder Rack. | 23330 |
| 3120-0222 | Stainless steel officer side body with full height 36" wide forward and 48" wide (interior) rearward compartmentation. Includes (1) 60" wide compartment over the wheel well and one (1) ladder storage tunnel and access door at rear with push-button latch. | 16510 |
| 3120-0223 | Stainless steel officer side body with full height 48" wide forward and 48" wide (interior) rearward compartmentation. Includes (1) 60" wide compartment over the wheel well and one (1) ladder storage tunnel and access door at rear with push-button latch. | 18351 |
| 3120-0224 | Stainless Steel Officer side body with full height 48" wide forward and 60" wide (interior) rearward compartmentation. Includes (1) 60" wide compartment over the wheel well and one (1) ladder storage tunnel and access door at rear with push-button latch. | 19270 |
| 3120-0225 | Stainless steel officer side body with full height 60" wide forward and 60" wide (interior) rearward compartmentation. Includes (1) 60" wide compartment over the wheel well and one (1) ladder storage tunnel and access door at rear with push-button latch. | 19368 |
| 3120-0226 | Officer side body with full height 36" wide forward and 36" wide rearward compartmentation. Includes (1) 56" wide compartment over the wheel well. | 11496 |
| 3120-0227 | Officer 3/4 side body with full height 60" wide forward and 42" wide rearward compartmentation. Includes (1) 56" wide compartment over the wheel well. | 8270 |
| 3120-0228 | Officer 3/4 side body with upper and lower compartmentation. Includes 60" wide forward and 42" wide rearward lower compartments and (3) opening upper compartments. | 8773 |
| 3120-0229 | Officer side body with full height 60" wide forward and 42" wide rearward compartmentation. Includes (1) 56" wide compartment over the wheel well. | 13227 |
| 3120-0230 | Officer full height side body with upper and lower compartmentation. Includes 60" wide forward and 42" wide rearward lower compartments and (3) opening upper compartments. For use with ladder storage thru tank. | 13732 |
| 3120-0231 | Officer side body with full height 60" wide forward and 42" wide rearward compartmentation. Includes (1) 33" wide compartment over the wheel well and (1) Zico Overhead Ladder Rack. | 19727 |
| 3120-0232 | Officer side body with full height 36" wide forward and 36" wide rearward compartmentation. Includes (1) 56" wide compartment over the wheel well. | 10812 |
| 3120-0234 | Officer side body with full height 48" wide forward and 48" wide rearward compartmentation. Includes (1) 56" wide compartment over the wheel well. | 13227 |
| 3120-0236 | Overhead Ladder Rack to be offset forward includes shifting compartment (rearward) over the wheel well. | 639 |
| 3120-0238 | Officer full height side body with upper and lower compartmentation. Includes 36" wide forward and 36" wide rearward lower compartments and (2) opening upper compartments. Includes (1) Zico Overhead Ladder Rack mounted centered between upper compartments. | 21455 |
| 3120-0239 | Officer side compartment top storage box (PR). Locate one forward and one rearward of the ladder rack. Boxes to be smooth plate and painted job color with diamond plate tops. The rearward box to have a rear vertically hinged door with push-button latch. Boxes to have (1) diamond plate lid each with push button latch. | 2004 |
| 3120-0240 | Officer 3/4 side body with upper and lower compartmentation. Includes 24" wide forward and 36" wide rearward lower compartments and (2) opening upper compartments. | 6368 |
| 3120-0241 | Compartment R1 to have rescue style interior compartment height. | 1602 |
| 3120-0242 | Officer side tunnel to hold: (1) 1500 gallon Fol-da-tank. | 672 |
| 3120-0243 | Officer 3/4 side body with full height 42" wide forward and 48" wide rearward compartmentation. Includes (1) 56" wide compartment over the wheel well. | 7223 |

| Item No. | Description | |
|---|---|---|
| 3120-0244 | Officer side body with full height 30" wide forward and 50" wide rearward extended compartmentation. Includes (1) 56" wide compartment over the wheel well and (1) 2-Arm Ladder Rack. The ladder rack is to be sanded DA finish and includes amber lights on each end to visually indicate when the rack is in motion. | 31404 |
| 3120-0245 | Officer side body with full height 24" wide forward and 36" wide rearward compartmentation. Includes (1) 56" wide compartment over the wheel well. | 9434 |
| 3120-0246 | Officer side body with full height 30" wide forward and 36" wide rearward compartmentation. Includes (1) 56" wide compartment over the wheel well. | 10093 |
| 3120-0247 | Officer side body with full height 24" wide forward and 50" wide rearward extended compartmentation. Includes (1) 56" wide compartment over the wheel well. | 10093 |
| 3120-0248 | Officer side body with full height 30" wide forward and 50" wide rearward extended compartmentation. Includes (1) 56" wide compartment over the wheel well. | 10756 |
| 3120-0249 | Officer side body with full height 36" wide forward and 50" wide rearward extended compartmentation. Includes (1) 56" wide compartment over the wheel well. | 11458 |
| 3120-0250 | Officer side body with full height 24" wide forward and 50" wide rearward enhanced extended compartmentation. Includes (1) 56" wide compartment over the wheel well. | 10397 |
| 3120-0251 | Officer side body with full height 30" wide forward and 50" wide rearward enhanced extended compartmentation. Includes (1) 56" wide compartment over the wheel well. | 11055 |
| 3120-0252 | Officer side body with full height 36" wide forward and 50" wide rearward enhanced extended compartmentation. Includes (1) 56" wide compartment over the wheel well. | 11760 |
| 3120-0254 | Officer side body with full height 52" wide forward and 52" wide rearward compartmentation. Includes (1) 56" wide compartment over the wheel well. | 13227 |
| 3120-0255 | Officer side body with full height 36" wide forward and 50" wide rearward compartmentation. Includes (1) 56" wide compartment over the wheel well. | 11760 |
| 3120-0256 | Officer side body with full height 30" wide forward and 50" wide rearward compartmentation. Includes (1) 56" wide compartment over the wheel well. | 11055 |
| 3120-0257 | Officer side body with full height 24" wide forward and 50" wide rearward compartmentation. Includes (1) 56" wide compartment over the wheel well. | 10397 |
| 3120-0258 | Officer 3/4 side body with full height 24" wide forward and 50" wide rearward compartmentation. Includes (1) 56" wide compartment over the wheel well. | 6860 |
| 3120-0259 | Officer 3/4 side body with full height 30" wide forward and 50" wide rearward compartmentation. Includes (1) 56" wide compartment over the wheel well. | 7270 |
| 3120-0260 | Officer 3/4 side body with full height 36" wide forward and 50" wide rearward enhanced extended compartmentation. Includes (1) 56" wide compartment over the wheel well. | 7711 |
| 3120-0261 | Officer half side body with 24" wide forward and 50" wide rearward compartmentation. Includes adjustable ladder tracks. | 5683 |
| 3120-0262 | Officer half side body with 30" wide forward and 50" wide rearward compartmentation. Includes adjustable ladder tracks. | 6010 |
| 3120-0263 | Officer half side body with 36" wide forward and 50" wide rearward enhanced extended compartmentation. Includes adjustable ladder tracks. | 6363 |
| 3120-0264 | Officer side body with full height 24" wide forward and 50" wide rearward compartmentation. Includes (1) 33" wide compartment over the wheel well and (1) Zico Overhead Ladder Rack. | 17280 |
| 3120-0265 | Officer side body with full height 30" wide forward and 50" wide rearward compartmentation. Includes (1) 33" wide compartment over the wheel well and (1) Zico Overhead Ladder Rack. | 17937 |
| 3120-0266 | Officer side body with full height 36" wide forward and 50" wide rearward compartmentation. Includes (1) 33" wide compartment over the wheel well and (1) Zico Overhead Ladder Rack. | 18642 |
| 3120-0268 | Officer side body with full height 42" wide forward and 56" wide rearward compartmentation. Includes (1) 56" wide compartment over the wheel well. | 12466 |
| 3120-0269 | Officer side body with full height 36" wide forward and 42" wide rearward compartmentation. Includes (1) 56" wide compartment over the wheel well and one (1)ladder storage tunnel and access door at rear. | 15426 |
| 3120-0270 | Officer side body with full height 42" wide forward and 56" wide rearward compartmentation. Includes (1) 33" wide compartment over the wheel well and (1) Zico Overhead Ladder Rack. | 19097 |
| 3120-0271 | Officer 3/4 side body with full height 42" wide forward and 56" wide rearward enhanced extended compartmentation. Includes (1) 56" wide compartment over the wheel well. | 8186 |
| 3120-0272 | Officer half side body with 42" wide forward and 56" wide rearward enhanced extended compartmentation. Includes adjustable ladder tracks. | 6741 |
| 3120-0273 | Officer side body with full height 36" wide forward and 50" wide rearward enhanced extended compartmentation. Includes (1) 20" wide compartment over the wheel well and (1) E-One center mounted Overhead Ladder Rack. | 18642 |
| 3120-0274 | Officer side body with full height 36" wide forward and 50" wide rearward enhanced extended compartmentation. Includes (1) 56" wide compartment over the wheel well. | 12502 |
| 3120-0275 | Officer side body with full height 42" wide forward and 56" wide rearward enhanced extended compartmentation. Includes (1) 56" wide compartment over the wheel well. | 13311 |
| 3120-0276 | Officer side body with full height 48" wide forward and 62" wide rearward enhanced extended compartmentation. Includes (1) 56" wide compartment over the wheel well. | 14177 |

| Item No. | Description | |
|---|---|---|
| 3120-0277 | Officer side body with full height 60" wide forward and 56" wide rearward enhanced extended compartmentation. Includes (1) 56" wide compartment over the wheel well. | 15103 |
| 3120-0278 | Officer side body with full height 36" wide forward and 50" wide rearward enhanced extended compartmentation. Includes (1) 33" wide compartment over the wheel well and (1) Zico Overhead Ladder Rack. | 19866 |
| 3120-0279 | Officer side body with full height 42" wide forward and 56" wide rearward enhanced extended compartmentation. Includes (1) 33" wide compartment over the wheel well and (1) Zico Overhead Ladder Rack. | 20675 |
| 3120-0280 | Officer side body with full height 48" wide forward and 62" wide rearward enhanced extended compartmentation. Includes (1) 33" wide compartment over the wheel well and (1) Zico Overhead Ladder Rack. | 21539 |
| 3120-0281 | Officer side body with full height 60" wide forward and 56" wide rearward enhanced extended compartmentation. Includes (1) 33" wide compartment over the wheel well and (1) Zico Overhead Ladder Rack. | 22466 |
| 3120-0282 | Officer side body with full height 36" wide forward and 50" wide rearward enhanced extended compartmentation. Includes (1) 56" wide compartment over the wheel well and one (1) storage tunnel. | 15566 |
| 3120-0283 | Officer side body with full height 42" wide forward and 56" wide rearward enhanced extended compartmentation. Includes (1) 56" wide compartment over the wheel well and one (1) storage tunnel. | 16376 |
| 3120-0284 | Officer side body with full height 48" wide forward and 62" wide rearward enhanced extended compartmentation. Includes (1) 56" wide compartment over the wheel well and one (1) storage tunnel. | 17241 |
| 3120-0285 | Officer side body with full height 60" wide forward and 56" wide rearward enhanced extended compartmentation. Includes (1) 56" wide compartment over the wheel well and one (1) storage tunnel. | 18164 |
| 3120-0286 | Officer 3/4 side body with full height 30" wide forward and 36" wide rearward compartmentation. Includes (1) 56" wide compartment over the wheel well. | 6064 |
| 3120-0287 | Officer side body with upper and lower compartmentation. Includes 24" wide forward and 36" wide rearward lower compartments and (2) opening upper compartments. Includes (1) Zico Overhead Ladder Rack centered mounted between upper compartments. | 16787 |
| 3120-0288 | Officer full height side body with upper and lower compartmentation. Includes 42" wide forward and 42" wide rearward lower compartments and (2) opening upper compartments. Includes (1) Zico Overhead Ladder Rack mounted centered between upper compartments. | 18908 |
| 3120-0290 | Officer side body with full height 30" wide forward and 50" wide rearward enhanced extended compartmentation. Includes (1) 56" wide compartment over the wheel well and one (1) storage tunnel. | 14816 |
| 3120-0291 | Officer side body with full height 50" wide forward and 50" wide rearward enhanced extended compartmentation. Includes (1) 33" wide compartment over the wheel well and (1) Zico Overhead Ladder Rack. | 20675 |
| 3120-0292 | Officer side body with full height 56" wide forward and 56" wide rearward enhanced extended compartmentation. Includes (1) 33" wide compartment over the wheel well and (1) Zico Overhead Ladder Rack. | 21538 |
| 3120-0293 | Officer side body with full height 62" wide forward and 62" wide rearward enhanced extended compartmentation. Includes (1) 33" wide compartment over the wheel well and (1) Zico Overhead Ladder Rack. | 22402 |
| 3120-0294 | Officer side body with full height 50" wide forward and 50" wide rearward enhanced extended compartmentation. Includes (1) 56" wide compartment over the wheel well. | 13311 |
| 3120-0295 | Officer side body with full height 56" wide forward and 56" wide rearward enhanced extended compartmentation. Includes (1) 56" wide compartment over the wheel well. | 14177 |
| 3120-0296 | Officer side body with full height 62" wide forward and 62" wide rearward enhanced extended compartmentation. Includes (1) 56" wide compartment over the wheel well. | 15039 |
| 3120-0297 | Officer side body with full height 50" wide forward and 50" wide rearward enhanced extended compartmentation. Includes (1) 56" wide compartment over the wheel well and one (1) ladder storage tunnel and access door at rear. | 16376 |
| 3120-0298 | Officer side body with full height 56" wide forward and 56" wide rearward enhanced extended compartmentation. Includes (1) 56" wide compartment over the wheel well and one (1) ladder storage tunnel and access door at rear. | 17240 |
| 3120-0299 | Officer side body with full height 62" wide forward and 62" wide rearward enhanced extended compartmentation. Includes (1) 56" wide compartment over the wheel well and one (1) ladder storage tunnel and access door at rear. | 18102 |
| 3120-0300 | Officer side body with full height 42" wide forward and 56" wide rearward enhanced extended compartmentation. Includes (1) 56" wide compartment over the wheel well and one (1) storage tunnel and access door at rear. | 16376 |
| 3120-0301 | Officer side tunnel to hold: [#LOC]. | 672 |
| 3120-0302 | Officer half side body with 42" wide forward and 42" wide rearward compartmentation. | 5779 |

| Item No. | Description | |
|---|---|---|
| 3120-0305 | Stainless steel officer side body with full height 48" wide forward and 48" wide (interior) rearward compartmentation. Includes (1) 60" wide compartment over the wheel well and one (1) ladder storage tunnel and access door at rear with push-button latch. Upper area of ladder storage to have stop at 8' and be used for misc. storage. | 18676 |
| 3120-0306 | Officer side body with 62" wide full height forward enhanced extended compartment 36" wide half height second forward compartment and 50" wide half height rearward compartmentation. Includes adjustable ladder tracks. | 19484 |
| 3120-0307 | Officer side body with full height 24" wide forward and 56" wide rearward extended compartmentation. Includes (1) 33" wide compartment over the wheel well and (1) Zico Overhead Ladder Rack. | 18011 |
| 3120-0308 | Officer side body with full height 24" wide forward and 50" wide rearward enhanced extended compartmentation. Includes (1) 56" wide compartment over the wheel well and one (1) ladder storage tunnel and access door at rear. | 17039 |
| 3120-0309 | Officer side body with upper and lower compartmentation. Includes 36" wide forward and 50" wide rearward extended lower compartmentation and (2) opening upper compartments with (1) Zico Overhead Ladder Rack centered between the compartments. | 22162 |
| 3120-0310 | Officer side body with full height 36" wide forward and 36" wide rearward compartmentation. Includes (1) 33" wide compartment over the wheel well one (1) storage tunnel and (1) Zico Overhead Ladder Rack. | 21982 |
| 3120-0311 | Officer side body with full height 42" wide forward and 42" wide rearward compartmentation. Includes (1) 33" wide compartment over the wheel well one (1) storage tunnel and (1) Zico Overhead Ladder Rack. | 22790 |
| 3120-0312 | Officer side body with full height 48" wide forward and 48" wide rearward compartmentation. Includes (1) 33" wide compartment over the wheel well one (1) storage tunnel and (1) Zico Overhead Ladder Rack. | 23655 |
| 3120-0313 | Officer side body with full height 60" wide forward and 42" wide rearward compartmentation. Includes (1) 33" wide compartment over the wheel well one (1) storage tunnel and (1) Zico Overhead Ladder Rack. | 24582 |
| 3120-0314 | Officer side body with full height 36" wide forward and 50" wide rearward enhanced extended compartmentation. Includes (1) 33" wide compartment over the wheel well one (1) storage tunnel and (1) Zico Overhead Ladder Rack. | 22927 |
| 3120-0315 | Officer side body with full height 42" wide forward and 56" wide rearward enhanced extended compartmentation. Includes (1) 33" wide compartment over the wheel well one (1) storage tunnel and (1) Zico Overhead Ladder Rack. | 23738 |
| 3120-0316 | Officer side body with full height 48" wide forward and 62" wide rearward enhanced extended compartmentation. Includes (1) 33" wide compartment over the wheel well (1) Zico Overhead Ladder Rack and one (1) storage tunnel. | 24603 |
| 3120-0317 | Officer side body with full height 60" wide forward and 56" wide rearward enhanced extended compartmentation. Includes (1) 33" wide compartment over the wheel well one (1) storage tunnel and (1) Zico Overhead Ladder Rack. | 25530 |
| 3120-0318 | Officer side body with full height 36" wide forward and 50" wide rearward enhanced extended compartmentation (2008 body design) with (1) 56" wide compartment over the wheel well and one (1) storage tunnel. | 21214 |
| 3120-0319 | Officer half side body with 20" wide forward and 50" wide rearward extended compartmentation. Includes adjustable ladder tracks. | 5269 |
| 3120-0320 | Officer side upper body extension. Does not include external upper doors. External framework and platework only. Platework shall be recessed. | 2330 |
| 3120-0321 | Stainless steel officer side body with full height 30" wide forward and 58" wide rearward enhanced extended compartmentation. Includes (1) 54" wide compartment over the wheel well. | 11055 |
| 3120-0322 | Stainless steel officer side body with full height 40" wide forward and 58" wide rearward enhanced extended compartmentation. Includes (1) 54" wide compartment over the wheel well. | 12518 |
| 3120-0323 | Stainless steel officer side body with full height 48" wide forward and 58" wide rearward enhanced extended compartmentation. Includes (1) 54" wide compartment over the wheel well. | 13325 |
| 3120-0324 | Stainless steel officer side body with full height 30" wide forward and 40" wide rearward compartmentation. Includes (1) 54" wide compartment over the wheel well. | 10093 |
| 3120-0325 | Stainless steel officer side body with full height 40" wide forward and 40" wide rearward compartmentation. Includes (1) 54" wide compartment over the wheel well. | 11555 |
| 3120-0326 | Stainless steel officer side body with full height 48" wide forward and 40" wide rearward compartmentation. Includes (1) 54" wide compartment over the wheel well. | 12362 |
| 3120-0327 | Stainless steel officer half side body with 30" wide forward and 40" wide rearward compartmentation. Includes adjustable ladder tracks. | 5049 |
| 3120-0328 | Stainless steel officer half side body with 40" wide forward and 40" wide rearward compartmentation. Includes adjustable ladder tracks. | 5779 |
| 3120-0329 | Stainless steel officer half side body with 48" wide forward and 40" wide rearward compartmentation. Includes adjustable ladder tracks. | 6185 |

| Item No. | Description | |
|---|---|---|
| 3120-0330 | Stainless steel officer 3/4 side body with full height 30" wide forward and 40" wide rearward compartmentation. Includes (1) 54" wide compartment over the wheel well. | 6312 |
| 3120-0331 | Stainless steel officer 3/4 side body with full height 40" wide forward and 40" wide rearward compartmentation. Includes (1) 54" wide compartment over the wheel well. | 7223 |
| 3120-0332 | Stainless steel officer 3/4 side body with full height 48" wide forward and 40" wide rearward compartmentation. Includes (1) 54" wide compartment over the wheel well. | 7729 |
| 3120-0333 | Stainless steel officer side body with full height 30" wide forward and 40" wide rearward compartmentation. Includes (1) 38" wide compartment over the wheel well and (1) Zico Overhead Ladder Rack. | 16975 |
| 3120-0334 | Stainless steel officer side body with full height 40" wide forward and 40" wide rearward compartmentation. Includes (1) 38" wide compartment over the wheel well and (1) Zico Overhead Ladder Rack. | 18437 |
| 3120-0335 | Stainless steel officer side body with full height 48" wide forward and 40" wide rearward compartmentation. Includes (1) 38" wide compartment over the wheel well and (1) Zico overhead ladder rack. | 19243 |
| 3120-0336 | Stainless steel officer side body with full height 30" wide forward and 58" wide rearward enhanced extended compartmentation. Includes (1) 38" wide compartment over the wheel well and (1) Zico Overhead Ladder Rack. | 17937 |
| 3120-0337 | Stainless steel officer side body with full height 40" wide forward and 58" wide rearward enhanced extended compartmentation. Includes (1) 38" wide compartment over the wheel well and (1) Zico Overhead Ladder Rack. | 19399 |
| 3120-0338 | Stainless steel officer side body with full height 48" wide forward and 58" wide rearward enhanced extended compartmentation. Includes (1) 38" wide compartment over the wheel well and (1) Zico Overhead Ladder Rack. | 20206 |
| 3120-0339 | Officer half side stainless steel body with 30" wide forward and 58" wide rearward enhanced extended compartmentation. Includes adjustable ladder tracks. | 6010 |
| 3120-0340 | Officer half side stainless steel body with 40" wide forward and 58" wide rearward enhanced extended compartmentation. Includes adjustable ladder tracks. | 6741 |
| 3120-0341 | Officer half side stainless steel body with 48" wide forward and 58" wide rearward enhanced extended compartmentation. Includes adjustable ladder tracks. | 7146 |
| 3120-0342 | Officer 3/4 side stainless steel body with 30" wide forward and 58" wide rearward enhanced extended compartmentation. Includes (1) 54" wide compartment over the wheel well. | 7270 |
| 3120-0343 | Officer 3/4 side stainless steel body with 40" wide forward and 58" wide rearward enhanced extended compartmentation. Includes (1) 54" wide compartment over the wheel well. | 8186 |
| 3120-0344 | Officer 3/4 side stainless steel body with 48" wide forward and 58" wide rearward enhanced extended compartmentation. Includes (1) 54" wide compartment over the wheel well. | 8692 |
| 3120-0346 | Officer half side body with (2) forward compartments (48" and 30" wide) and one rearward area for locating of side tank dump. | 5262 |
| 3120-0347 | Officer half side body with (2) forward compartments (48" and 30" wide) and (1) rearward compartment (24"). | 6185 |
| 3120-0348 | Officer 3/4 side body with (2) lower forward compartments (48" and 30" wide) (3) upper compartments (54") and one lower rearward area for locating of side tank dump. | 7277 |
| 3120-0349 | Officer 3/4 side body with (2) lower forward compartments (48" and 30" wide) (3) upper compartments (54") and (1) lower rearward compartment (24"). | 8201 |
| 3120-0350 | Officer full height side body with (2) lower forward compartments (48" and 30" wide) (3) upper compartments (54") and one lower rearward area for locating of side tank dump. | 9293 |
| 3120-0351 | Officer full height side body with (2) lower forward compartments (48" and 30" wide) (3) upper compartments (54") and (1) lower rearward compartment (24"). | 10218 |
| 3120-0352 | Officer full height side body with (2) full height rescue style forward compartments (48" and 30" wide) (1) upper compartment (61" and offset rearward of the rack opening) and one lower rearward area for locating of side tank dump. | 9293 |
| 3120-0353 | Officer full height side body with (2) full height rescue style forward compartments (48" and 30" wide) (1) upper compartment (61" and offset rearward of the rack opening) and (1) lower rearward compartment (24"). | 10218 |
| 3120-0356 | Officer full height side body with (2) lower forward compartments (48" and 30" wide) (3) upper compartments (54") with rear compartment face access door for portable tank storage and one lower rearward area for locating of side tank dump. | 10761 |
| 3120-0357 | Officer full height side body with (2) lower forward compartments (48" and 30" wide) (3) upper compartments (54") with rear compartment face access door for portable tank storage and (1) lower rearward compartment (24"). | 11684 |
| 3120-0359 | Officer side body with full height 24" wide forward and 50" wide rearward enhanced extended compartmentation. Includes (1) 56" wide compartment over the wheel well and one (1) storage tunnel. | 14065 |
| 3120-0363 | Officer full height side body with (2) full height rescue style forward compartments (48" and 30" wide) (2) upper compartments (40" wide) and one lower rearward area for locating of side tank dump. | 9293 |

| Item No. | Description | |
|---|---|---|
| 3120-0364 | Officer full height side body with (2) full height rescue style forward compartments (48" and 30" wide) (2) upper compartment (40" wide) and (1) lower rearward compartment (24"). | 10218 |
| 3120-0366 | Stainless steel officer side body with full height 48" wide forward and 48" wide rearward compartmentation with reduced upper depth. Includes (1) 54" wide compartment over the wheel well and (1) storage tunnel. | 16291 |
| 3120-0367 | Stainless steel officer side body with full height 54" wide forward and 54" wide rearward compartmentation with reduced upper depth. Includes (1) 54" wide compartment over the wheel well and (1) storage tunnel. | 17596 |
| 3120-0368 | Stainless steel officer side body with full height 60" wide forward and 60" wide rearward compartmentation with reduced upper depth. Includes (1) 54" wide compartment over the wheel well and (1) storage tunnel. | 18900 |
| 3120-0369 | Stainless steel officer side body with full height 48" wide forward and 48" wide rearward compartmentation. Includes 54" wide compartment over the wheel well and a dual arm hydraulic overhead ladder rack. | 13227 |
| 3120-0370 | Stainless steel officer side body with full height 54" wide forward and 54" wide rearward compartmentation. Includes 54" wide compartment over the wheel well and a dual arm hydraulic overhead ladder rack. | 14285 |
| 3120-0371 | Stainless steel officer side body with full height 60" wide forward and 60" wide rearward compartmentation. Includes 54" wide compartment over the wheel well and a dual arm hydraulic overhead ladder rack. | 15345 |
| 3120-0377 | Officer half side tandem body with 30" wide forward and 30" wide rearward compartmentation. | 7895 |
| 3120-0378 | Officer half side tandem body with 42" wide forward and 42" wide rearward compartmentation. | 8625 |
| 3120-0379 | Officer half side tandem body with 60" wide forward and 54" wide rearward compartmentation. | 9464 |
| 3120-0380 | Officer 3/4 side tandem body with full height 30" wide forward and 30" wide rearward compartmentation. Includes (2) 51.5" wide compartments over the wheel well. | 9142 |
| 3120-0381 | Officer 3/4 side tandem body with full height 42" wide forward and 42" wide rearward compartmentation. Includes (2) 51.5" wide compartments over the wheel well. | 10053 |
| 3120-0382 | Officer 3/4 side tandem body with full height 60" wide forward and 54" wide rearward compartmentation. Includes (2) 51.5" wide compartments over the wheel well. | 11099 |
| 3120-0383 | Officer side tandem body with upper and lower compartmentation. Includes 30" wide forward and 30" wide rearward compartments and (4) opening upper compartments. | 13394 |
| 3120-0384 | Officer side tandem body with upper and lower compartmentation. Includes 42" wide forward and 42" wide rearward compartments and (4) opening upper compartments. | 14858 |
| 3120-0385 | Officer side tandem body with upper and lower compartmentation. Includes 60" wide forward and 54" wide rearward compartments and (4) opening upper compartments. | 16562 |
| 3120-0386 | Officer side tandem body with upper and lower compartmentation. Includes 30" wide forward and 30" wide rearward compartments and (4) opening upper compartments. Includes overhead rack opening centered between upper compartments. | 13928 |
| 3120-0387 | Officer side tandem body with upper and lower compartmentation. Includes 42" wide forward and 42" wide rearward compartments and (4) opening upper compartments. Includes overhead rack opening centered between upper compartments. | 15450 |
| 3120-0388 | Officer side tandem body with upper and lower compartmentation. Includes 60" wide forward and 54" wide rearward compartments and (4) opening upper compartments. Includes overhead rack opening centered between upper compartments. | 17223 |
| 3120-0389 | Officer side tandem body with full height 30" wide forward and 30" wide rearward compartmentation. Includes (2) 51.5" wide compartments over the wheel well. | 12924 |
| 3120-0390 | Officer side tandem body with full height 42" wide forward and 42" wide rearward compartmentation. Includes (2) 51.5" wide compartments over the wheel well. | 14386 |
| 3120-0391 | Officer side tandem body with full height 60" wide forward and 54" wide rearward compartmentation. Includes (2) 51.5" wide compartments over the wheel well. | 16057 |
| 3120-0392 | Officer side tandem body with full height 30" wide forward and 30" wide rearward compartmentation. Includes (2) 42" wide compartments over the wheel well and overhead rack opening centered between upper compartments. | 13439 |
| 3120-0393 | Officer side tandem body with full height 42" wide forward and 42" wide rearward compartmentation. Includes (2) 42" wide compartments over the wheel well and overhead rack opening centered between upper compartments. | 14959 |
| 3120-0394 | Officer side tandem body with full height 60" wide forward and 54" wide rearward compartmentation. Includes (2) 42" wide compartments over the wheel well and overhead rack opening centered between upper compartments. | 16699 |
| 3120-0401 | Officer side body with full height 42" wide forward and 50" wide rearward compartmentation. Includes (1) 33" wide compartment over the wheel well and (1) Zico Overhead Ladder Rack. | 18871 |
| 3120-0402 | Officer half side tandem body with with 42" wide forward and one rearward area for locating of side tank dump rearward of the wheel well. | 8927 |
| 3120-0403 | Officer side body with full height 60" wide forward and 56" wide rearward compartmentation. Includes (1) 56" wide compartment over the wheel well and one (1) storage tunnel located behind the upper (3) compartment back walls. | 17219 |

| Item No. | Description | |
|---|---|---|
| 3120-0404 | Officer half side body with 36" wide forward and 31" wide rearward compartmentation. Includes adjustable ladder tracks mounted to outside of hosebed 3x3 and to run full height for max adjustments.. | 5404 |
| 3120-0405 | Officer side body with full height 46" wide forward and 56" wide rearward enhanced extended compartmentation. Includes (1) 56" wide compartment over the wheel well. | 14177 |
| 3120-0406 | Officer side body with full height 50" wide forward and 50" wide rearward compartmentation. Includes (1) 33" wide compartment over the wheel well and (1) Zico Overhead Ladder Rack. | 21519 |
| 3120-0407 | Officer side body with full height 42" wide forward and 56" wide rearward enhanced extended compartmentation. Includes (1) 56" wide compartment over the wheel well. Rescue Pumper style compartments for use with low hosebed. | 15121 |
| 3120-0410 | Officer side body with full height 60" wide forward and 62" wide rearward enhanced extended compartmentation. Includes (1) 56" wide compartment over the wheel well. | 15565 |
| 3120-0411 | Officer side body with full height 42" wide forward and 56" wide rearward enhanced extended compartmentation. Includes (1) 56" wide compartment over the wheel well. | 13914 |
| 3120-0412 | 2-Arm Ladder Rack on Officer Side. The ladder rack includes amber lights on each end to visually indicate when the rack is in motion. Restricts the top folding step (if optioned) from closing completely. Includes mounting bracket (matching rear compartment face or compartment wrap finish) for components mounted on rear compartment face including the stop/tail/turn lights. | 16690 |
| 3120-0413 | Officer side body with full height 60" wide forward and 56" wide rearward compartmentation. Includes (1) 33" wide compartment over the wheel well and (1) Zico Overhead Ladder Rack. | 21519 |
| 3120-0414 | Officer half side body with (2) forward compartments (39" and 39" wide) and (1) rearward compartment (24"). | 7393 |
| 3120-0415 | Officer full height side body with upper and lower compartmentation. Includes 48" wide forward and 62" wide enhanced extended rearward lower compartments and (3) opening upper compartments and (1) Zico Overhead Ladder Rack. Upper compartments to be (1) 56" wide forward Overhead ladder rack (2) 45" wide compartments rearward of rack. | 21347 |
| 3120-0416 | Officer full height side body with upper and lower compartmentation. Includes 60" wide forward and 42" wide rearward lower compartments and (3) opening upper compartments and (1) Zico Overhead Ladder Rack. | 20232 |
| 3120-0418 | Officer 3/4 side body with full height 42" wide forward and 56" wide rearward enhanced extended compartmentation. Includes (1) 56" wide compartment over the wheel well. Compartments raised 8" due to roll-up doors to allow for addtional storage room. | 12459 |
| 3120-0420 | Officer side body with full height 36" wide forward and 45" wide rearward compartmentation. Includes (1) 56" wide compartment over the wheel well. | 12411 |
| 3120-0421 | Officer side diamond plate roof top compartment. Includes (2) hinged lift-up access doors with turn latches and grab handle(s) and (1) vertical hinged access door at the rear with push button latch to be. Each lid to have (1) bracket mounted LED light and to be wired to door ajar indicator in cab. | 2407 |
| 3120-0423 | Officer side body with full height 32" wide forward and 50" wide rearward compartmentation. Includes (1) 56" wide compartment over the wheel well and one (1) storage tunnel beside the water tank. | 11272 |
| 3120-0424 | Officer side body with full height 54" wide forward and 48" wide rearward compartmentation. Includes (1) 56" wide compartment over the wheel well and one (1) storage tunnel located behind the upper (3) compartment back walls. | 16331 |
| 3120-0425 | Officer side body with half height 36" wide forward (above fuel fill area) and full height 50" wide rearward enhanced extended compartmentation. Includes (1) 56" wide compartment over the wheel well. Area below forward compartment will be for mounting of fuel fill. | 11760 |
| 3120-0426 | Officer side body with full height 26" and 56" wide forward compartments and 56" wide rearward compartmentation. Includes (1) 56" wide compartment over the wheel well and one (1) storage tunnel. | 18655 |
| 3120-0427 | Officer side body with full height 60" wide front and 54" wide rear compartments. Includes (1) 60" wide compartment over the wheel well and one (1) storage tunnel located behind reduced upper depth compartments. SS eMAX only. | 21005 |
| 3120-0428 | Officer side body with full height 36" wide forward and 50" wide rearward enhanced extended compartmentation. Includes (1) 33" wide compartment over the wheel well and (1) Zico Overhead Ladder Rack. Area below forward compartment will be for mounting of fuel fill. | 19866 |
| 3120-0429 | Officer side tandem body with upper and lower compartmentation. Includes 60" wide forward and 54" wide rearward compartments and (1) opening forward upper compartment with painted panels rearward. | 17724 |
| 3120-0437 | Rear aluminum smooth plate painted job color vertical hinged door on officer side roof top compartments. Includes thumb latch and wiring for door ajar switch. | 231 |
| 3120-0438 | Stainless steel officer side body with full height 36" wide forward and 48" wide rearward compartmentation. Includes 54" wide compartment over the wheel well and a dual arm hydraulic overhead ladder rack. | 13278 |

| Item No. | Description | |
|---|---|---|
| 3120-0439 | Officer side body with full height 26" and 56" wide forward and 56" wide rearward compartmentation. Includes (1) 33" wide compartment over the wheel well and (1) Zico Overhead Ladder Rack. | 22986 |
| 3120-0441 | Officer half side body with 36" wide forward and 56" wide rearward enhanced extended compartmentation. Includes adjustable ladder tracks. | 6741 |
| 3120-0442 | Officer side tandem body with upper and lower compartmentation. Includes 30" wide forward and 54" wide rearward compartments and (4) opening upper compartments. Includes overhead rack opening centered between upper compartments. Includes offseting upper compartments forward due to deck gun location and access panel on upper rear compartment face to deck gun piping. | 15494 |
| 3120-0444 | Officer half side body with 36" wide forward and 56" wide rearward enhanced extended compartmentation. Includes adjustable ladder tracks. 8" compartment raise to allow for taller opening with roll-up doors and smooth plate above wheel well area. | 7267 |
| 3120-0445 | Officer side tandem body with 60" wide forward and 54" wide rearward compartmentation. Forward compartment to be full height rearward to be half height. | 11661 |
| 3120-0446 | Officer side diamond plate roof top compartment. Includes smooth plate painted vertical hinged access door at the rear with push button latch to be wired to door ajar indicator in cab. | 1672 |
| 3120-0447 | Officer side body with full height 54" wide forward and 36" wide rearward compartmentation. Includes (1) 33" wide compartment over the wheel well and (1) Zico Overhead Ladder Rack. | 20165 |
| 3120-0448 | Officer side roof top assembly. Does not include external upper doors or internal platework. External framework and platework only. | 1679 |
| 3120-0449 | Officer side body with full height 60" wide forward and 56" wide rearward compartmentation. Includes (1) 56" wide compartment over the wheel well. | 14154 |
| 3120-0450 | Officer half side body with 36" wide forward and 36" wide rearward compartmentation. Includes 30 degree rear body angle for greater angle of departure. | 5415 |
| 3120-0453 | Officer 3/4 side tandem body with full height 42" wide forward and 59" wide rearward compartmentation. Includes (2) 51.5" wide compartments over the wheel well. | 11306 |
| 3120-0456 | Officer side body with full height 26" and 56" wide forward compartments and 56" wide rearward compartmentation. Includes (1) 56" wide compartment over the wheel well. | 15629 |
| 3120-0457 | Stainless steel officer side body with full height 48" wide forward and 70" wide rearward enhanced extended compartmentation. Includes (1) 54" wide compartment over the wheel well. | 14325 |
| 3120-0458 | Officer high side stainless steel body with 60" front and 60" rear. Five compartments tandem axle. For use with single arm overhead ladder rack. | 19000 |
| 3120-0460 | Officer side tandem body with upper and lower compartmentation. Includes 30" wide forward and 54" wide rearward compartments and (4) opening upper compartments. Includes overhead rack opening centered between upper compartments. Includes offseting upper compartments forward due to deck gun location and access panel on upper rear compartment face to deck gun piping. | 15494 |
| 3120-0461 | 2-arm ladder rack on officer side. The ladder rack includes Whelen 500 series TIR6 amber lights on each end to visually indicate when the rack is in motion. Restricts the top folding step (if optioned) from closing completely. Includes mounting bracket (if required matching rear compartment face or compartment wrap finish) for components mounted on rear compartment face. | 17270 |
| 3120-0462 | Officer side roof top compartment contents: (2) 6" x 10' hard suction hoses (not included) stored horizontally. Includes stop bracket rearward of hard suction hoses. | 1142 |
| 3120-0463 | Officer side diamond plate roof top compartment. Includes vertical hinged access door at the rear with a "D-Ring" latch handle to be wired to door ajar indicator in cab. .188 material | 1697 |
| 3120-0464 | Stainless steel officer half side body with 36" wide front and 40" wide rear and 60" wide fender panel. | 5894 |
| 3120-0465 | Officer side tandem body with full height (1) 60" wide forward and (1) 60" wide rearward compartmentation. For use with Rear Mount pump. | 19878 |
| 3120-0466 | Officer side body with upper and lower compartmentation. Includes 36" wide forward and 36" wide rearward lower compartments and (3) opening upper compartments with (1) 33" wide compartment over the wheel well and (1) Zico Overhead Ladder Rack. | 18140 |
| 3120-0468 | Stainless steel officer side body with full height 48" wide forward and 58" wide rearward enhanced extended compartmentation. Includes (1) 60" wide compartment over the wheel well. | 13824 |
| 3120-0469 | Stainless steel officer side body with full height 54" wide forward and 54" wide rearward compartmentation with custom size reduced upper depth. Includes (1) 54" wide compartment over the wheel well and (1) custom size storage tunnel. | 18187 |
| 3120-0470 | Stainless steel officer side body with full height 48" wide forward and 54" wide rearward compartmentation. Includes (1) 54" wide compartment over the wheel well. | 13325 |
| 3120-0471 | Officer side tandem body with (2) 34" wide forward and 54" wide rearward compartmentation. (1) forward compartment to be full height (1) forward and rearward to be half height. | 12335 |
| 3120-0472 | Officer 3/4 side body with full height 48" wide forward and 62" wide rearward enhanced extended compartmentation. Includes (1) 56" wide compartment over the wheel well and one (1) storage tunnel. | 15882 |

| Item No. | Description | |
|---|---|---|
| 3120-0473 | (2) officer side roof top compartments with removable floors and extra width to inboard side. Includes hinged raised compartment lids with turn latches grab handle(s) and gas shock hold open and drain line(s) ran to below body. Each lid to have (1) bracket mounted LED light and to be wired to door ajar indicator in cab. | 7159 |
| 3120-0474 | Rear aluminum smooth plated painted [#COL] vertically hinged door on officer side roof top compartments. Includes thumb latch and wiring for door ajar switch. | 231 |
| 3120-0475 | Stainless steel officer side body with full height 60" wide forward and 60" wide rearward compartmentation. Includes (1) 54" wide compartment over the wheel well. Upper compartment depth only 12" IPO standard 14" due to 3-section and roof ladders in tunnel. | 15148 |
| 3120-0476 | Officer side body with full height 60" wide front and 54" wide rear compartments. Includes (1) 44" wide compartment over the wheel well and one (1) Zico overhead ladder rack. SS eMAX only. | 26252 |
| 3120-0477 | (2) Officer side roof top compartments. Includes hinged raised aluminum smooth plate with black Scorpion coating (IPOS diamond plate) compartment lids with turn latches and grab handle(s). Each lid to have (1) bracket mounted LED light and to be wired to door ajar indicator in cab. | 3238 |
| 3120-0478 | Officer side tandem body with 60" wide full height forward compartment. Rearward of the forward compartment to 3/4 height with 54" wide rearward compartmentation. Includes (2) 51.5" wide compartments over the wheel well. | 13230 |
| 3120-0479 | Officer side body with full height/full depth 30/60" wide front and 54" wide rear compartments. Includes (1) 60" wide compartment over the wheel well. SS eMAX only. | 19068 |
| 3120-0480 | Officer side body with full height 30/60" wide front and 54" wide rear compartments. Includes (1) 44" wide compartment over the wheel well with Zico overhead ladder rack. SS eMAX only. | 28042 |
| 3120-0481 | Officer side body with full height 30/60" wide front and 54" wide rear compartments. Includes (1) 60" wide compartment over the wheel well and one (1) storage tunnel located behind reduced upper depth compartments. SS eMAX only. | 22760 |
| 3120-0482 | Officer side body with full height 50" wide forward and 42" wide rearward compartmentation. Includes (1) 33" wide compartment over the wheel well (1) Zico overhead ladder rack. Rear perimeter or body raised 3" for improved departure angle. | 20165 |
| 3120-0483 | Officer full height side body with upper and lower compartmentation. Includes 42" wide forward and 56" wide rearward lower enhanced compartmentation and (3) opening upper compartments. For use with ladder storage in the hosebed. | 12518 |
| 3120-0485 | Stainless steel officer half side body with 30" wide front and 40" wide rear and 60" wide fender panel. For use with suicide hinged R1 door (if applicable). | 5894 |
| 3120-0486 | Vertical and horizontal partitions located in officer side roof top compartment. Vertical partition located rearward of electric cord reel and horizontal partition located over DOT bottles. Floor to be provided above the DOT bottles to use remaining area above. | 1372 |
| 3120-0487 | Officer side body with full height 48" wide forward and 56" wide rearward enhanced extended compartmentation. Includes (1) 56" wide compartment over the wheel well. | 14177 |
| 3120-0488 | Vertical door stop for storage tunnel door. | 133 |
| 3120-0489 | Officer side roof top compartment contents: (1) 10' hard suction hose (not included) stored horizontal. Includes stop bracket rearward of hard suction hoses and Nylatron compartment flooring. | 575 |
| 3120-0490 | (2) officer side roof top compartments with extra width to inboard side. Includes hinged raised compartment lids with turn latches grab handle(s) and gas shock hold open and drain line(s) ran to below body. Each lid to have (1) bracket mounted LED light and to be wired to door ajar indicator in cab. Compartment lid construction shall be aluminum smooth plate IPO diamond plate painted Black Scorpion (rough finish). | 6175 |
| 3120-0491 | Officer side body with upper and lower compartmentation. Includes 42" wide forward and 42" wide rearward lower compartments (3) opening upper compartments. Includes (1) 33" wide compartment over the wheel well and (1) Zico Overhead Ladder Rack. Smooth plate compartment top painted black durabak. | 19789 |
| 3120-0492 | Officer 3/4 side body with (3) full height rescue style (2) forward compartments (48" and 30" wide) and (1) rearward compartment (24"). Includes (1) 56" wide compartment over the wheel well. | 8690 |
| 3120-0494 | Officer side roof top compartment. Includes vertically hinged access door at the rear with push button latch to be wired to door ajar indicator in cab. | 1672 |
| 3120-0495 | (2) officer side roof top compartments with extra width to inboard side. Includes hinged raised compartment lids with turn latches grab handle(s) and gas shock hold open and drain line(s) ran to below body. Each lid to have (2) bracket mounted LED lights and to be wired to door ajar indicator in cab. | 5840 |
| 3120-0496 | Officer side tandem body with full height 30" wide forward and 30" wide rearward compartmentation. Includes (2) 42" wide compartments over the wheel well and overhead rack opening centered between upper compartments. | 14300 |
| 3120-0498 | Stainless steel officer side body with full height 48" wide forward and 48" wide rearward compartmentation. Includes (1) 54" wide compartment over the wheel well. | 13060 |

| Item No. | Description | |
|---|---|---|
| 3120-0500 | Officer side body with full height 24" wide forward and 36" wide rearward compartmentation. Includes (1) 56" wide compartment over the wheel well. Rear bottom corner of truck will be angled 30 degrees for a greater rear angle of departure. | 10748 |
| 3120-0501 | Officer side body with full height 36" wide forward and 62" wide rearward enhanced extended compartmentation. Includes (1) 56" wide compartment over the wheel well and one (1) storage tunnel. | 15872 |
| 3120-0502 | Officer full height side body with 36" wide forward and 48" wide rearward compartmentation. Includes (2) 28.5" wide compartments over the wheel well for the installation of Zico Overhead Ladder Rack and one forward area for side tank dump. For use with custom chassis only. | 10738 |
| 3120-0503 | Officer side tandem body with upper and lower compartmentation. Includes 30" wide forward full height and 30" wide low rearward compartments and (2) opening upper compartments. Includes offseting upper compartments forward due to deck gun location and access panel on upper rear compartment face to deck gun piping. | 14866 |
| 3120-0504 | Officer side body with full height 48" wide forward and 48" wide rearward compartmentation. Includes (1) 33" wide compartment over the wheel well and (1) Zico Overhead Ladder Rack. Ladder rack controls to be located on officer side rear compartment face above tail lights. Compartment material to be 5083-H321. | 21511 |
| 3120-0505 | Officer 3/4 height side body with 42" wide and 20" wide forward compartments and 42" wide rearward compartment. Includes (1) 56" wide compartments over the wheel well. For use with custom chassis only. | 8643 |
| 3120-0508 | Officer side ERV body with full height 37" forward and 52" rearward. Includes (1) 56" wide compartment over the wheel well. Includes (2) roof top compartments with hinged raised lids with thumb latches grab handle(s) and gas shock hold open and drain line(s) ran to below body.Eack lid to have (1) bracket mounted LED light and to be wired to door ajar indicator in cab. | 20546 |
| 3120-0509 | Officer side body with full height 24" wide forward and 36" wide rearward compartmentation. Includes (1) 56" wide compartment over the wheel well. | 10748 |
| 3120-0510 | Officer half side body with 38" wide forward and 56" wide rearward compartment. Includes adjustable ladder tracks. | 7078 |
| 3120-0511 | The rear body corner on the right side to extend full height and a smooth plate inner panel. | 208 |
| 3120-0512 | Notch compartment R2 in upper back wall rearward due to the 5" rear suction and provide a cover box. | 358 |
| 3120-0513 | (2) Officer side roof top compartments. Includes hinged raised compartment lids with thumb latches and grab handle(s). Each lid to have (1) bracket mounted LED light and to be wired to door ajar indicator in cab. | 2872 |
| 3120-0514 | Officer half side tandem body with (2)41" wide forward and (2)32" wide rearward compartmentation. | 12783 |
| 3120-0515 | Stainless steel officer side body with full height 48" wide forward and 54" wide rearward compartmentation with reduced upper depth. Includes (1) 60" wide compartment over the wheel well. | 12860 |
| 3120-0516 | Stainless steel officer side body with half height 40" wide forward and 40" wide rearward compartmentation. | 10486 |
| 3120-0517 | Stainless steel officer side body with full height 40" wide forward and 48" wide rearward compartmentation. Includes (1) 60" wide compartment over the wheel well. | 12362 |
| 3120-0519 | Officer side roof top compartment contents: (1) 12'-14'+ hard suction hose (not included) stored horizontal. Includes Nylatron compartment flooring. Length of capacity depends on body configuration. | 670 |
| 3120-0520 | Officer side body with full height 48" wide forward and 62" wide rearward compartmentation. Includes (1) 56" wide compartment over the wheel well. | 13325 |
| 3120-0521 | Stainless steel officer side body with full height 48" wide forward and 58" wide rearward enhanced extended compartmentation. Includes (1) 60" wide compartment over the wheel well. | 13558 |
| 3120-0522 | Officer 3/4 side body with full height 36" wide forward and 42" wide rearward compartmentation. Includes (1) 56" wide compartment over the wheel well. | 8030 |
| 3120-0524 | Officer side body with full height 54" wide forward and 48" wide rearward compartmentation. Includes (1) 56" wide compartment over the wheel well. | 13268 |
| 3120-0526 | (2) officer side roof top compartments. Includes hinged raised compartment lids with turn latches and grab handle(s). The rear compartment to include (1) vertically hinged access door at the rear with push button latch for access to (1) 6" X10' hard suction tube. Each lid to have (1) bracket mounted LED light and to be wired to door ajar indicator in cab. | 2976 |
| 3120-0527 | 2-arm ladder rack on officer side. Modified pivot position to allow the ladder rack to deploy at 48" to the center of ladders as loaded or less from ground level. The ladder rack includes amber lights on each end to visually indicate when the rack is in motion. Restricts the top folding step (if optioned) from closing completely. Includes mounting bracket (if required matching rear compartment face or compartment wrap finish) for components mounted on rear compartment face. | 13717 |

| Item No. | Description | |
|---|---|---|
| 3120-0528 | Officer full height side body with 20" wide and 42" wide forward compartments and 42" wide rearward compartment. Includes (1) 56" wide compartments over the wheel well. For use with custom chassis only. | 10738 |
| 3120-0529 | Officer side body with full height 42" wide forward and 56" wide rearward compartmentation. Includes (1) 56" wide compartment over the wheel well. | 13914 |
| 3120-0530 | Officer high side stainless steel tanker body with 52" front and 52" rear rescue style R2 and R3 modified for one-arm Zico overhead ladder rack. Four compartments tandem axle. Ladder rack not included requires adding sales code 3365-0185-199. | 21335 |
| 3120-0531 | Officer side body with full height full depth 60" wide front and 54" wide rear compartments. Includes (1) 44" wide compartment over the wheel well and one (1) Zico overhead ladder rack. SS eMAX only. | 26477 |
| 3120-0532 | Double hard suction storage rack: Two (2) hard suction hose storage racks shall be provided on the driver side of the body. The racks shall be positioned with one (1) rack located beside the other. | 1142 |
| 3120-0533 | Stainless steel officer side special tall body with full height 40" wide forward and 58" wide rearward enhanced extended compartmentation. Includes (1) 54" wide compartment over the wheel well. | 13325 |
| 3120-0535 | Officer side body with full height 60" wide forward and 62" wide rearward enhanced extended compartmentation. Includes (1) 33" wide compartment over the wheel well one (1) storage tunnel and (1) Zico Overhead Ladder Rack. | 25992 |
| 3120-0536 | Officer side body with full height 50" wide forward and 36" wide rearward compartmentation. Includes (1) 56" wide compartment over the wheel well. Rear perimeter or body raised 4" for improved departure angle. | 12352 |
| 3120-0538 | Officer half side stainless steel body with 40" wide forward and 58" wide rearward enhanced extended compartmentation. Includes adjustable ladder tracks and 60" wide rear fender. | 6876 |
| 3120-0539 | (2) officer side roof top compartments. Includes hinged raised compartment lids with slam style D-ring latches and no grab handles. Each lid to have (1) bracket mounted LED light and to be wired to door ajar indicator in cab. | 3009 |
| 3120-0540 | (2) officer side roof top compartments. Includes hinged raised compartment lids with turn latches and grab handle(s). Each lid to have (1) bracket mounted LED light and to be wired to door ajar indicator in cab. Includes fixed floor with hard suction storage below accessible through hinged rear panel access door with bent D-ring latch. | 3779 |
| 3120-0541 | Officer side body with full height 60" wide forward and 42" wide rearward compartmentation. Includes (1) 33" wide compartment over the wheel well and (1) Zico Overhead Ladder Rack. | 19727 |
| 3120-0542 | Officer side body with full height 42" wide forward and 42" wide rearward compartmentation. Includes (1) 56" wide compartment over the wheel well. | 12133 |
| 3120-0543 | Officer half side stainless steel body with 40" wide forward and 58" wide rearward extended compartmentation. Includes adjustable ladder tracks and 60" wide rear fender. | 6936 |
| 3120-0544 | Officer half side body with 42" wide forward and 50" wide rearward enhanced extended compartmentation. Includes adjustable ladder tracks. | 6566 |
| 3120-0545 | Officer half side body with 24" wide forward and 50" wide rearward enhanced extended compartmentation. | 5683 |
| 3120-0546 | Officer side smooth plate roof top compartment and painted black Durabak. Includes vertically hinged smooth plate access door painted job color at the rear with push button latch to be wired to door ajar indicator in cab. | 2090 |
| 3120-0547 | (2) officer side roof top compartments with extra width to inboard side. Includes hinged raised compartment lids with turn latches grab handle(s) and gas shock hold open and drain line(s) ran to below body. Each lid to have (1) Amdor strip LED light and to be wired to door ajar indicator in cab. | 6555 |
| 3120-0548 | Officer full height side body with (3) full height rescue style forward compartments (48" and 30" wide) and (1) rearward compartment (24" wide) plus (1) upper compartment over w/well(33" wide and offset rearward of the rack opening). | 10218 |
| 3120-0550 | Officer side tandem body with (1) 36" wide and (1) 20" wide forward and 54" wide rearward compartmentation. (1) forward compartment to be full height (1) forward and rearward to be half height. | 10410 |
| 3120-0552 | Officer Full height forward compartment and 3/4 side rear of R1 tandem body with 42" wide forward and 42" wide rearward compartmentation. Includes (2) 51.5" wide compartments over the wheel well. Lowered W/Well for extra compt heigth. Side Dump Valves between Tandems N/A. | 15118 |
| 3120-0553 | (2) officer side roof top compartments. Includes hinged raised compartment lids with turn latches and grab handle(s). Each lid to have (3) bracket mounted EION LED lightS and to be wired to door ajar indicator in cab. | 2872 |
| 3120-0554 | Stainless steel officer half side body with 30" wide front and 40" wide rear and 60" wide fender panel. | 5621 |

| Item No. | Description | |
|---|---|---|
| 3120-0555 | Officer side tandem body with upper and lower compartmentation. Includes 60" wide full height forward and 54" wide half height rearward compartments and (1) opening forward upper compartment with painted panels rearward. | 18305 |
| 3120-0556 | Officer side rear mount pumper body with full height 48" wide forward and 60" wide rearward compartmentation. Includes (1) 56" wide compartment over the wheel well and provisions to rear mount pump panel in rearward side compartment. | 13612 |
| 3120-0557 | Officer side body with full height 60" wide forward and 48" wide rearward compartmentation. Includes (1) 56" wide compartment over the wheel well. | 14154 |
| 3120-0558 | (2) officer side roof top compartments for instillation of DOT/ASME bottles. Includes hinged raised compartment lids with turn latches and grab handle(s). Each lid to have (1) bracket mounted LED light and to be wired to door ajar indicator in cab. | 2872 |
| 3120-0559 | Officer side body with full height 42" wide forward and 42" wide rearward compartmentation. Includes (1) 56" wide compartment over the wheel well and one (1) storage tunnel beside the water tank. | 14816 |
| 3120-0560 | Officer side body with full height 34" and 48" wide forward and 56" wide rearward compartmentation. Includes (1) 33" wide compartment over the wheel well and (1) Zico Overhead Ladder Rack. | 23548 |
| 3120-0561 | Officer side body with full height 30" wide forward and 44" wide rearward compartmentation. Includes (1) 56" wide compartment over the wheel well. | 11760 |
| 3120-0562 | Officer side body with full height 42" and 40" wide forward compartments and 56" wide rearward compartmentation. Includes (1) 56" wide compartment over the wheel well. Side Mount eMAX only. | 16192 |
| 3120-0563 | Zico hydraulic drop-down ladder rack (LAS-XT) with 12 inches additional drop. Includes spacer brackets with ladder rack controller located on the officer side pump panel. | 8140 |
| 3120-0564 | Stainless steel officer side body with full height/full depth 60" wide forward and 60" wide rearward compartmentation. Includes 60" wide compartment over the wheel well and a 2-arm hydraulic overhead ladder rack. | 15881 |
| 3120-0568 | Officer side rear mount rescue pumper body with full height 38" wide forward and 42" wide rearward compartmentation with officer side ladder storage tunnel. Includes (1) 56" wide compartment over the wheel well and 30 degree angled rear body for improved angle of departure. | 16376 |
| 3120-0569 | Stainless steel officer side body with full height full depth 48" wide forward and 40" wide rearward compartmentation. Includes (1) 54" wide compartment over the wheel well. | 13060 |
| 3120-0570 | Officer full height body side with (1) 48" wide Full Height forward compartment (1) 30" wide lower forward compartment adjacent to w/well (2) upper compartments (57" wide each) the rearward upper having a rear compartment face access door for portable tank storage and (1) lower rearward compartment (24") to rear of the w/well. | 12246 |
| 3120-0571 | Stainless steel officer side body with full height 54" wide forward and 48" wide rearward compartmentation. Includes (1) 60" wide compartment over the wheel well. | 14106 |
| 3120-0572 | Officer side body with full height 60" wide front and 54" wide rear compartments. Includes (1) 60" wide compartment over the wheel well and one (1) storage tunnel located behind reduced upper depth compartments. SS eMAX only. | 21005 |
| 3120-0573 | (2) side low profile stepped interior roof top compartments with extra width to inboard side. Includes hinged raised compartment lids with turn latchesgas shock hold opens and drain line(s) ran to below body. Each lid to have (1) bracket mounted LED light and to be wired to door ajar indicator in cab. Lids shall be without grab handles for lowered OAH and shall have a stepped interior. | 5857 |
| 3120-0574 | Officer half side body with 42" wide forward and 36" wide rearward compartmentation. Includes adjustable ladder tracks. | 5646 |
| 3120-0575 | Stainless steel officer side body with full height 40" wide forward and 58" wide rearward enhanced extended compartmentation. Includes (1) 60" wide compartment over the wheel well. | 14985 |
| 3120-0576 | Officer side rear mount rescue pumper body with full height 62" wide forward and 42" wide rearward compartmentation with officer side ladder storage tunnel. Includes (1) 56" wide compartment over the wheel well and 30 degree angled rear body for improved angle of departure. | 18539 |
| 3120-0577 | Officer side rear mount rescue pumper body with full height 62" wide forward and 42" wide rearward compartmentation. Includes (1) 56" wide compartment over the wheel well and 30 degree angled rear body for improved angle of departure. | 15474 |
| 3120-0578 | Officer side body with 3/4 height 36" wide forward and 56" wide rearward compartmentation. Includes (1) 56" wide x 20" high compartment over the wheel well. | 9091 |
| 3120-0579 | Officer side diamond plate roof top compartment. Includes smooth plate painted vertical hinged access door at the rear with D-Ring latch to be wired to door ajar indicator in cab. .125 material | 1699 |
| 3120-0581 | Stainless steel officer half side body with 40" wide forward 40" wide rear and a 60" wide fender panel. Includes adjustable ladder tracks. | 6038 |
| 3120-0582 | Officer side body with full height full depth 30/60" wide front and 54" wide rear compartments. Includes (1) 44" wide compartment over the wheel well with Zico overhead ladder rack. SS eMAX only. | 28605 |

| Item No. | Description | |
|---|---|---|
| 3120-0584 | Officer half side body with 30" wide forward and 60" wide rearward extended compartmentation. Includes adjustable ladder tracks. | 6909 |
| 3120-0585 | Stainless steel officer half side body with 30" wide front and 40" wide rear and 60" wide fender panel. For use with suicide hinged R1 door. | 5633 |
| 3120-0586 | (2) officer side roof top compartments. Includes hinged raised compartment lids with turn latches and grab handle(s). Each lid to have (1) bracket mounted ROM V4 LED strip light and to be wired to door ajar indicator in cab. | 3262 |
| 3120-0587 | Officer side body with full height 68" wide forward and 56" wide rearward compartmentation. Includes (1) 56" wide compartment over the wheel well and one (1) storage tunnel located behind the upper (3) compartment back walls. | 17821 |
| 3120-0588 | Stainless steel officer side body with full height 60" wide forward and 60" wide rearward compartmentation with reduced upper depth. Includes (1) 60" wide compartment over the wheel well and (1) storage tunnel. | 19639 |
| 3120-0589 | Officer full height side body with (3) full height rescue style forward compartments (48" and 30" wide) and (1) rearward compartment (24" wide) (1) upper compartment (56" wide). | 10218 |
| 3120-0590 | Officer side rear mount rescue pumper body with full height 38" wide forward and 42" wide rearward compartmentation. Includes (1) 56" wide compartment over the wheel well and 30 degree angled rear body for improved angle of departure. | 13311 |
| 3120-0591 | (2) officer side roof top compartments with extra width to inboard side. Compartment top and lids to be smooth plate painted black Durabak. Includes hinged raised compartment lids with turn latches grab handle(s) and gas shock hold open and drain line(s) ran to below body. Each lid to have (1) bracket mounted LED light and to be wired to door ajar indicator in cab. | 7173 |
| 3120-0592 | Stainless steel officer side body with full height 48" wide forward and 48" wide rearward compartmentation. Includes (1) 60" wide compartment over the wheel well and a storage tunnel. | 17444 |
| 3120-0594 | (2) officer side roof top compartments with extra width to inboard side. Includes hinged raised compartment lids with turn latches grab handle(s) and gas shock hold open and drain line(s) ran to below body. Each lid to have (1) bracket mounted ROM V4 LED strip light and to be wired to door ajar indicator in cab. | 6130 |
| 3120-0595 | Officer side body with full height 30in. wide forward and 62in. wide rearward enhanced extended compartmentation. Includes (1) 56in. wide compartment over the wheel well and a cavity (using space from R1) between R1 and R2 for vertical exhaust to exit on outer compartment top just forward of wheel well. | 16521 |
| 3120-0597 | Officer side body with full height 60" wide forward and 56" wide rearward compartmentation. Includes (1) 56" wide compartment over the wheel well and one (1) storage tunnel located behind the upper (3) compartment back walls. Rear perimeter or body raised 3" for improved departure angle. | 17219 |
| 3120-0598 | Officer side body with full height 30" wide forward and 50" wide rearward enhanced extended compartmentation. Includes (1) 33" wide compartment over the wheel well and (1) Zico Overhead Ladder Rack. | 19115 |
| 3120-0599 | Officer full height side body with 20" wide and 42" wide forward compartments and 42" wide rearward compartment. Includes (1) 56" wide compartments over the wheel well. For use with 30" high lower compt height only. | 10738 |
| 3120-0600 | Officer half side body with 44" wide forward and 36" wide rearward compartmentation and 28" high opening. Includes adjustable ladder tracks. | 7720 |
| 3120-0601 | Officer side body with full height 30" wide forward and 50" wide rearward compartmentation. Includes (1) 33" wide compartment over the wheel well and (1) Zico Overhead Ladder Rack. Rescue Pumper individual style compartments. | 19115 |
| 3120-0602 | Officer side body with full height 36" wide forward and 50" wide rearward compartmentation. Includes (1) 33" wide compartment over the wheel well and (1) Zico Overhead Ladder Rack. Rescue Pumper individual style compartments. | 20069 |
| 3120-0605 | Officer side body with upper and lower compartmentation. Includes 42" wide forward and 42" wide rearward lower compartments (3) opening upper compartments. Includes (1) 33" wide compartment over the wheel well and (1) Zico Overhead Ladder Rack. | 18800 |
| 3120-0606 | Officer side body with full height 60" wide forward and 56" wide rearward compartmentation. Includes (1) 56" wide compartment over the wheel well. Top Mount eMAX Only. | 14154 |
| 3120-0607 | Officer 3/4 side tandem body with 3/4 full height 42" wide forward (2) 51.5" wide compartments over the wheel well and a 3/4 full height 42" wide rearward compartment. Additionally there shall be a 3/4 full height 20" wide beavertail compartment openings. | 11015 |
| 3120-0608 | Officer full height side body (FOR 4X4 Chassis) with 30" high lower compartment height (2) lower forward compartments (34" and 28" wide) ahead of wheel well (1) one lower rearward compartment 24" wide and (3) upper compartments (48.67" wide x 32" high opening) each transverse front to rear. | 10218 |
| 3120-0609 | Stainless steel officer side body with full height 40" wide forward and 58" wide rearward enhanced extended compartmentation. Includes (1) 41" wide compartment over the wheel well and (1) Zico Overhead Ladder Rack. | 20164 |

| Item No. | Description | |
|---|---|---|
| 3120-0610 | Officer side body with full height 60" wide front and 54" wide rear compartments. Includes (1) 60" wide compartment over the wheel well for use with 2-arm ladder rack. SS eMAX only. | 26252 |
| 3120-0611 | (2) officer side roof top compartments. Includes hinged raised compartment lids with turn latches and grab handle(s). Each lid to have (1) Amdor LED strip light and to be wired to door ajar indicator in cab. | 3689 |
| 3120-0612 | Officer side tandem body with upper and lower compartmentation. Includes 48" wide full height forward and 48" wide rearward compartments and (3) opening upper compartments. Includes offseting upper compartments forward due to deck gun location and access panel on upper rear compartment face to deck gun piping. | 17166 |
| 3120-0613 | Officer 3/4 side stainless steel body with 40" wide forward and 58" wide rearward compartmentation. Includes (1) 60" wide compartment over the wheel well. | 8510 |
| 3120-0614 | Officer side ERV style roof top compartment contents: (2) 6" x 10' hard suction hoses (not included) stored vertical. Includes vertical partition around hard suction hoses. | 1142 |
| 3120-0615 | Officer side rear mount pumper body with full height 54" wide forward and 60" wide rearward compartmentation. Includes (1) 56" wide compartment over the wheel well and one (1) storage tunnel and access door at rear. | 23815 |
| 3120-0616 | Officer side body with full height 60" wide forward and 52" wide rearward compartmentation. Includes (1) 33" wide compartment over the wheel well and (1) Zico Overhead Ladder Rack. Includes slide-back rear side compt for engine access. HS only. | 32821 |
| 3120-0617 | Stainless steel officer half side body with 35" wide front and 40" wide rear and 60" wide fender panel. | 5840 |
| 3120-0618 | Officer side rear mount rescue pumper body with full height 24" wide forward and 42" wide rearward compartmentation. Includes (1) 56" wide compartment over the wheel well and 30 degree angled rear body for improved angle of departure. | 12229 |
| 3120-0619 | Officer 3/4 side body with (2) lower forward compartments (48" and 30" wide) (3) upper compartments (55") and (1) lower rearward compartment (28"). | 8352 |
| 3120-0620 | Two (2) officer side roof top compartments with extra width to inboard side. Includes hinged raised compartment lids with one (1) L handle style 1/4 turn latche in the center of the compartment top and two (2) grab handle(s) on each side of the L handle and gas shock hold open and drain line(s) ran to below body. Each lid to have (1) Amdor LED strip light and to be wired to door ajar indicator in cab. | 6576 |
| 3120-0623 | Officer side tandem body with upper and lower compartmentation. Includes 60" wide lower forward and 54" wide lower rearward compartments and (1) forward upper compartment with standard hose bed side rearward. | 18305 |
| 3120-0625 | Officer side body with upper and lower compartmentation. Includes full height 24" wide forward 30" high by 38" wide lower rear and 34" high by 38" wide upper rear compartmentation. Includes (1)33" wide compartment over the wheel well and (1) Zico Overhead Ladder Rack. | 17280 |
| 3120-0626 | Stainless steel officer side body with full height 54" wide forward and 54" wide rearward compartmentation with reduced upper depth. Includes (1) 60" wide compartment over the wheel well and (1) storage tunnel. | 18123 |
| 3120-0627 | Officer side body with full height 30" wide forward and 52" wide rearward enhanced extended compartmentation. Includes (1) 56" wide compartment over the wheel well. | 11760 |
| 3120-0628 | Officer half side body with (2) forward compartments (42" and 20" wide) and (1) rearward compartment (42"). The compartment opening height to be 30" IPO 34". For use with custom chassis only. | 6627 |
| 3120-0630 | Stainless steel officer side body with full height 48" wide front and 58" rear with reduced upper depth for "T" tank. Includes 60" wide compartment over rear wheels. Upper compartments to be 15" deep. | 14351 |
| 3120-0631 | (2) officer side roof top compartments for foam pails. Includes hinged compartment lids with turn latches and grab handle(s). Each compartment shall include LED lighting and to be wired to door ajar indicator in cab. | 2872 |
| 3120-0632 | Stainless steel officer half side body with 48" wide front and 40" wide rear and 60" wide fender panel. Includes adjustable ladder tracks. | 6444 |
| 3120-0633 | Stainless steel officer side body with full height/full depth 54" wide forward and 54" wide rearward compartmentation. Includes (1) 60" wide compartment over the wheel well. | 17596 |
| 3120-0634 | Stainless steel officer 3/4 side body with full height 40" wide forward and 40" wide rearward compartmentation. Includes (1) 60" wide compartment over the wheel well. | 7548 |
| 3120-0636 | Officer side tandem body with full height 60" wide forward and 54" wide rearward compartmentation. Includes (2) 51.5" wide compartments over the wheel well. Wheel wells and lower compartment height to lowered 4" over standard. (Pumper/Rescue Pumper Height). | 16057 |
| 3120-0639 | Officer side roof top compartment contents: (2) 6" x 10' hard suction hoses (not included) stored vertically. Includes horizontal partition between the hard suction hoses. NO stop for hoses. | 1142 |
| 3120-0640 | Officer side rear mount pumper body with two full height 48" wide forward compartments and 42" wide rearward compartment. Includes (1) 56" wide compartment over the wheel well and 30 degree angled rear body for improved angle of departure. | 19342 |
| 3120-0641 | Officer half side tandem body with 48" wide forward and 42" wide rearward compartmentation. | 9464 |

| Item No. | Description | |
|---|---|---|
| 3120-0642 | Officer side body with full height 30" wide forward and 50" wide rearward compartmentation. Includes (1) 56" wide compartment over the wheel well. | 11055 |
| 3120-0643 | Officer half side stainless steel body with 30" wide forward and 58" wide rearward extended compartmentation. Includes adjustable ladder tracks and 60" wide rear fender. | 6936 |
| 3120-0644 | Officer side body with full height 60in. wide forward and 42in. wide rearward compartments. Includes (1) 56in. wide compartment over the wheel well. Side Mount e-MAX only. | 13268 |
| 3120-0645 | Officer full height side body with 31" wide and 31" wide forward compartments and 42" wide rearward compartment. Includes (1) 56" wide compartments over the wheel well. | 10738 |
| 3120-0647 | Rear aluminum smooth plate painted job color vertical hinged door on roof top compartment. Includes D-ring latch and wiring for door ajar switch. | 233 |
| 3120-0648 | Roof top compartment contents: (1) 6in x 10ft hard suction hose (not included) stored in the lower area of roof top compartment. Includes stop bracket rear ward of hard suction hose if applicable to body length and partition surround over the hard suction hoses to accommodate storage area above and in front of the stored hose. Floor to include nylon pad as applicable for ease of deployment on scene. | 736 |
| 3120-0651 | Stainless steel officer side body with full height 48" wide forward and 54" wide rearward compartment with reduced upper depth. Includes (1) 60" wide compartment over the wheel well and (1) storage tunnel. | 17596 |
| 3120-0652 | Officer side body with full height 30" and 60" wide forward compartments and 54" wide rearward compartmentation. Includes (1) 60" wide compartment over the wheel well. Side mount SS eMAX only. | 19068 |
| 3120-0653 | Officer side body with special full height 23" wide forward and 50" wide rearward compartmentation. Includes (1) 50" wide compartment over the wheel well and (1) Zico Overhead Ladder Rack with special provision for ladder rack to be lowered so as to meet customer requirements in the down position. | 21596 |
| 3120-0654 | Officer side diamond plate roof top compartment. Includes smooth plate painted vertical hinged access door at the rear with D-ring style latch to be wired to door ajar indicator in cab. | 1672 |
| 3120-0655 | Officer side rear mount rescue pumper body with full height 38" wide forward and 42" wide rearward compartmentation. Includes (1) 33" wide compartment over the wheel well (1) Zico Overhead Ladder Rack and 30 degree angled rear body for improved angle of departure. | 20672 |
| 3120-0656 | Officer half side stainless steel body with 30" wide forward and 46" wide rearward compartmentation. Includes full height adjustable ladder tracks and 60" wide fender panel. | 6010 |
| 3120-0657 | Stainless steel 96" wide officer side body with full height 48" wide forward and 48" wide rearward compartmentation. Includes (1) 54" wide compartment over the wheel well. | 13194 |
| 3120-0658 | The front body corner on the right side to extend full height and have a smooth plate inner panel. | 208 |
| 3120-0660 | Officer side body with full height 30" wide forward and 52" wide rearward enhanced extended compartmentation. Includes (1) 33" wide compartment over the wheel well and (1) Zico Overhead Ladder Rack. | 18437 |
| 3120-0663 | Stainless steel officer side body with full height 36" wide forward and 48" wide rearward compartmentation. Includes (1) 60" wide compartment over the wheel well and a ladder storage tunnel. | 13797 |
| 3120-0664 | Stainless steel officer side body with full height 44" wide forward and 60" wide rearward compartmentation. Includes (1) 54" wide compartment over the wheel well and ladder storage tunnel. | 13797 |
| 3120-0665 | (3) Officer side roof top compartments with extra width to inboard side. (1) open generator compartment and (2) hinged raised compartments with lids and turn latches grab handle(s) and gas shock hold open and drain line(s) ran to below body. Each lid to have (1) bracket mounted LED light and to be wired to door ajar indicator in cab. | 6014 |
| 3120-0666 | Officer half side tandem body with 54" wide forward and 48" wide rearward compartmentation. Compartment height 30" pumper style. Side dumps not available. | 9464 |
| 3120-0667 | Officer side body with full height 34" and 56" wide forward compartments and 56" wide rearward compartmentation. Includes (1) 56" wide compartment over the wheel well. | 16274 |
| 3120-0668 | Stainless steel officer side body with full height full depth 48" wide forward and 58" wide rearward enhanced extended compartmentation. Includes (1) 60" wide compartment over the wheel well. | 14985 |
| 3120-0669 | Officer side tandem body with full height 48" wide forward and 48" wide rearward compartmentation. Includes (2) 51.5" wide compartments over the wheel well. | 15225 |
| 3120-0670 | Officer half side stainless steel body with 30" wide forward and 46" wide rearward compartmentation. Includes full height adjustable ladder tracks and 66" wide fender panel. | 6010 |
| 3120-0671 | Officer side body with full height 60" wide forward and 46" wide rearward compartmentation. Includes (1) 56" wide compartment over the wheel well and one (1) storage tunnel located behind the upper (3) compartment back walls. | 16587 |
| 3120-0672 | Officer side rear mount rescue pumper body with full height 24" wide forward and 42" wide rearward compartmentation with officer side ladder storage tunnel. Includes (1) 56" wide compartment over the wheel well and 30 degree angled rear body for improved angle of departure. | 15294 |

| Item No. | Description | |
|---|---|---|
| 3120-0673 | Stainless steel officer side body with full height 48" wide front and 48" rear compartments. Includes 60" wide compartment over the rear wheels. | 13265 |
| 3120-0674 | Officer 3/4 side body with full height 60" wide forward and 42" wide rearward compartmentation. Includes (1) 56" wide and 20" high compartment over the wheel well. | 10337 |
| 3120-0675 | Officer side tandem body with two forward compartments ahead of the rear wheels and one rear compartment behind rear wheels. The forward front compartment to be 38" wide and full height the rearward front compartment to be 24" wide and half height. The single rear to be a half height 60" wide compartment. | 16057 |
| 3120-0676 | Stainless steel officer side body with half height 35" wide forward and 48" wide rearward compartmentation. Include 60" wide wheel well. Includes adjustable ladder tracks. | 6010 |
| 3120-0677 | Officer side body with full height 36" wide forward and 56" wide rearward enhanced extended compartmentation. Includes (1) 56" wide compartment over the wheel well. | 12112 |
| 3120-0678 | Officer side tandem body with upper and lower compartmentation. Includes 66" wide half height forward and 60" wide half height rearward compartments and (1) opening rearward upper compartment to rear of compartment top mounted Portable Tank or Equipment Storage. | 18656 |
| 3120-0679 | Officer 3/4 side body with upper and lower compartmentation. Includes 42" wide forward and 48" wide rearward lower compartments and (2) opening upper compartments. | 7947 |
| 3120-0681 | Two (2) officer side roof top compartments with extra width to inboard side. Includes hinged raised compartment lids with one (1) ' L' handle style 1/4 turn latch in the center of the compartment top two (2) grab handle(s) on each side of the' L' handle gas shock hold open and drain line(s) ran to below body. Each lid to have (1) Amdor LED strip light and to be wired to door ajar indicator in cab. | 6576 |
| 3120-0682 | Officer side body with full height 35" wide forward and 47" wide rearward compartmentation. Includes (1) 56" wide compartment over the wheel well and one (1) storage tunnel. | 17741 |
| 3120-0683 | (3) officer side roof top compartments with extra width to inboard side (20"/96"/15"). Includes hinged raised compartment lids with thumb latches grab handle(s) and gas shock hold open and drain line(s) ran to below body. Each lid to have (1) bracket mounted LED light and to be wired to door ajar indicator in cab. Compartments shall be stepped at inboard side for a 26" deep section approximately 8.5" wide in order to stow a stokes basket. | 6712 |
| 3120-0685 | Officer side body with full height 42" wide forward and 56" wide rearward enhanced extended compartmentation. Includes (1) 33" wide compartment over the wheel well and (1) Zico Overhead Ladder Rack. | 19399 |
| 3120-0686 | Officer side body with full height 36" wide forward and 56" wide rearward enhanced extended compartmentation. Includes (1) 56" wide compartment over the wheel well and one (1) ladder storage tunnel and access door at rear. | 15177 |
| 3120-0689 | Officer side roof top assembly. Does not include external upper doors. External framework plate work and internal floors only. | 1679 |
| 3120-0690 | Officer side body with upper and lower compartmentation. Includes 42" wide forward and 56" wide rearward lower compartments and (3) opening upper compartments. | 13274 |
| 3120-0691 | Officer side body with full height 42 in. wide forward and 56in. wide rearward enhanced extended compartment. Includes (1) 56" wide compartment over the wheel well and one storage tunnel. | 16376 |
| 3120-0692 | Vertical partitions located in officer side roof top compartment. Vertical partition located 3" forward of electric cord reel and a adjustable divider shall be installed forward of the partition. The divider shall span from front to rear and be adjustable left to right. The use of Unistrut or equal materials shall provide for adjustability as required for divider. The divider plate shall be 3/16" smooth aluminum. | 764 |
| 3120-0693 | Roof top compartment modification to provide storage for a stokes basket accessible from the top. Includes partition wall to separate the stokes basket storage area from the remaining usable area of the compartment. Modify roof top compartment lids as needed. | 696 |
| 3120-0695 | Stainless steel officer side body with full height/full depth 60" wide forward and 60" wide rearward compartmentation. Includes (1) 60" wide compartment over the wheel well. | 19552 |
| 3120-0696 | Officer side body with full height 48" wide forward and 56" wide rearward compartmentation. Includes (1) 56" wide compartment over the wheel well and one (1) storage tunnel located behind the upper (3) compartment back walls. A cavity between R1 and R2 for vertical exhaust to exit on outer compartment top just forward of wheel well. | 18878 |
| 3120-0697 | Officer side body with full height 54" wide forward and 48" wide rearward compartmentation. Includes (1) 33" wide compartment over the wheel well and (1) Zico Overhead Ladder Rack. | 20843 |
| 3120-0699 | Officer side body with full height 40" wide forward and 56" wide rearward compartmentation. Includes (1) 56" wide compartment over the wheel well. | 13227 |
| 3120-0700 | Officer side body with full height 42" wide forward and 56" wide rearward enhanced extended compartmentation. Includes (1) 33" wide compartment over the wheel well and (1) Zico Overhead Ladder Rack. | 19399 |
| 3120-0701 | Stainless steel officer side body with modified (63" high from bottom to compt top) full height full depth 48" wide forward and 48" wide rearward compartmentation. Includes (1) 60" wide compartment over the wheel well. | 16365 |

| Item No. | Description | |
|---|---|---|
| 3120-0702 | Officer side roof top compartment contents: (1) 6" x 10' hard suction hose (not included) stored in lower rearward area of the roof top storage with Nylatron compartment flooring. Includes surround forward and above hard suction hose to allow for additional storage in remaining available roof top storage compartments accessible from top lift doors. | 755 |
| 3120-0703 | Officer side body with lower 48in wide forward and 48in wide rearward lower compartments. Includes: one (1) storage tunnel behind upper area inboard for ladders with an outer body additional storage tunnel accessible from the rear of the body for storage of four (4) 6in. diameter x minimum 12ft. hard suction hoses with rocker style or folding style handles. Storage chutes for hard tubes to be full body length trays and nylatron without tube stops so department can order custom full length hoses after delivery. | 17341 |
| 3120-0704 | Officer side body with full height 42" wide forward and 56" wide rearward compartmentation. Includes (1) 56" wide compartment over the wheel well. | 12466 |
| 3120-0705 | Officer side rear mount rescue pumper body with full height 24" wide forward and 42" wide rearward compartmentation. Includes (1) 33" wide compartment over the wheel well (1) Zico Overhead Ladder Rack and 30 degree angled rear body for improved angle of departure. | 19579 |
| 3120-0707 | Officer side body with full height 50" wide forward and 42" wide rearward compartmentation. Includes (1) 56" wide compartment over the wheel well and one (1) storage tunnel located behind the upper (3) compartment back walls. Rear perimeter or body raised 3" for improved departure angle. | 16223 |
| 3120-0708 | Officer side body with upper and lower compartmentation. Includes 24" wide forward and 36" wide rearward lower compartments and (2) opening upper compartments. For use with 94"(96" with rubrail) wide body configuration. | 9906 |
| 3120-0710 | (2) officer side roof top compartments with extra width to inboard side. Includes hinged raised compartment lids with D-Ring latches no grab handle(s) and gas shock hold open and drain line(s) ran to below body. Each lid to have (1) bracket mounted ROM V4 LED strip light and to be wired to door ajar indicator in cab. | 6338 |
| 3120-0714 | Officer side body with full height 42" wide forward and 56" wide rearward extended compartmentation. Includes (1) 56" wide compartment over the wheel well and one (1) storage tunnel. | 16376 |
| 3125-0001 | Mid-Engine module with 58" wide opening. Forward area of module to have double stacked double crosslays to hold up to 200' of 2.0" DJ (each). | 10392 |
| 3125-0002 | Mid engine side access doors (PR) painted job color. Painted surface does not include expanded metal inserts. | 1560 |
| 3125-0003 | Mid engine side access doors (PR) diamond plate. | 1359 |
| 3125-0005 | eMAX Forward body configuration - SM. Includes a lower double preconnect storage area upper transverse storage area rack in upper storage area for (2) backboards (vertical stored offset forward - sleeve each side of center pump access) center front pump access doors and removable center floor in upper area. | 2738 |
| 3125-0007 | eMAX crosswalk module. Includes raised floor walkway storage compartments with push button latches running boards (1) dual lighted LED folding step each side and access handrails mounted on the eMAX front body extension. | 1735 |
| 3125-0008 | eMAX Forward body configuration - SM. Includes a lower double preconnect storage area upper preconnect storage area sleeve in upper storage area for (2) backboards (vertical stored offset forward - sleeve is removable for center pump access) center front pump access doors and removable center floor in upper area. | 2738 |
| 3125-0009 | eMAX Forward body configuration - TM. Includes a lower double preconnect storage area provision for top mount pump operator's panel and center front pump access door. | 2738 |
| 3125-0010 | eMAX Forward body configuration. Includes a lower double preconnect storage area upper transverse storage area with lift-up ptd door rack in upper storage area for (2) backboards (vertically stored offset forward - sleeve each side of center pump access) center front pump access doors removable center floor in upper area and upper storage pan. | 2980 |
| 3125-0011 | eMAX Forward body configuration - SM. Includes a lower transverse storage area for (2) backboards and (1) stokes basket with boxed out style access door (wired to door ajar). Center area to be sleeved for pump access with center front pump access door and removable center floor area. | 2499 |
| 3125-0013 | SS eMAX forward body configuration - SM. Includes a lower double preconnect storage area upper preconnect storage area sleeve in upper storage area for (2) backboards (vertically stored offset forward - sleeve is removable for center pump access) center front pump access doors and removable center floor in upper area. | 3341 |
| 3125-0014 | eMAX Forward body configuration. Includes a lower transverse storage area rack in upper storage area for (2) backboards (vertically stored offset forward - sleeve each side of center pump access) upper transverse storage area center front pump access doors removable center floor in upper and lower areas and upper storage pan (pan to extend into forward body area and be wider to the rear). | 2738 |

| Item No. | Description | |
|---|---|---|
| 3125-0015 | eMAX Forward body configuration. Includes a rack in lower storage area for (2) backboards (vertically stored offset forward - sleeve each side of center pump access) lower transverse storage area upper transverse storage area center front pump access doors removable center floor in upper and lower areas and upper storage pan (pan to extend into forward body area and be wider to the rear). | 2738 |
| 3125-0016 | eMAX Forward body configuration - SM. Includes a lower double preconnect area upper transverse storage area rack in upper storage area for (1) 17' Little Giant ladder (vertically stored offset forward - sleeve each side of center pump access) center front pump access doors and removable center floor in upper area. | 3018 |
| 3125-0017 | eMAX Forward body configuration - SM. Includes a transverse storage area above pump panels that include (2) fixed shelves going full length (left to right) of the transverse compartment. The lower most shelf shall be approximately 11" from the floor. It shall accommodate a door on each side approximately 10" in height. The doors shall be mounted below the lower most shelf and shall be recessed approximately 3" from each side. The smooth aluminum doors shall be 3/16" thick include a thumb latch and have a vertical hinge mounted to the rear side. The second shelf shall be mounted approximately 18" above the lower shelf. The lower area floor shall be constructed from 1/8" smooth aluminum plate and be bolted in to facilitate pump system servicing. The outboard floors of the upper area shall be constructed from 1/8" smooth aluminum plate. The center upper floor shall be 1/8" smooth aluminum plate and removable to provide easy access to the pump manifold and valves. | 3018 |
| 3125-0018 | eMAX Forward body configuration - SM. Includes a lower double preconnect storage area extruded boxed out upper transverse storage area with horizontal hinged door each side with push button latch and pull strap rack in upper storage area for (2) backboards (vertical stored offset forward - sleeve each side of center pump access) and (1) stokes basket (offset rearward) - 84.5" long x 24" high x 7.5" deep center front pump access doors removable center floor in upper area. | 3102 |
| 3125-0019 | SS eMAX forward body configuration - SM. Includes a lower double preconnect storage area sleeve in upper storage area for backboards or other transverse items with lift-up access door each side (stored offset forward - sleeve is removable for center pump access) center front pump access doors and removable center floor in upper area. | 3341 |
| 3125-0020 | eMAX Forward body configuration - TME. Includes a lower double preconnect storage area upper transverse storage area rack in upper storage area for (2) backboards (vertically stored offset forward - sleeve each side of center pump access) center front pump access doors and removable center floor in upper area. | 2738 |
| 3125-0021 | An eMAX forward body configuration - SM. Includes a lower double preconnect storage area upper transverse storage area rack in upper storage area for (1) 13' Little Giant Ladder (vertically stored offset forward sleeve each side of center pump access) and (1) Ferno Model 71-S two piece stokes basket (vertically stored) center front pump access doors with D-Ring latch and removable center floor in upper area. | 3214 |
| 3125-0022 | eMAX Forward body configuration - SM. Includes a lower double preconnect storage area upper transverse storage area with a lift up door (each side) to include pull strap push button latch wired to door ajar. Center front pump access doors and removable center floor in upper area. | 2738 |
| 3125-0023 | OBSOLETE. USE 3125-0018 | 2738 |
| 3125-0024 | OBSOLETE. USE 3125-0032 | 3102 |
| 3125-0025 | eMAX Forward body configuration - SM. Includes a lower double preconnect storage area upper preconnect storage area sleeve in upper storage area for (2) backboards (vertically stored offset forward - sleeve is removable for center pump access) center front pump access doors and removable center floor in upper area. Upper logo panel and storage door to be smooth plate for paint color or zolotone application. | 2738 |
| 3125-0027 | SS eMAX forward body configuration - SM. Includes a lower double preconnect storage area upper preconnect storage area (rearward) open storage area for dealer supplied hydraulic system (offset forward) center front pump access doors and removable center floor in upper area. Bolt on ventilated brushed stainless steel cover plates on both ends of forward open storage area. | 3341 |
| 3125-0028 | eMAX Forward body configuration - SM. Includes a lower double preconnect storage area upper transverse storage area with D-Ring latch each door rack in upper storage area for (2) backboards (vertically stored offset forward - sleeve each side of center pump access) center front pump access doors and removable center floor in upper area. | 2912 |
| 3125-0029 | eMAX Forward body configuration - SM. Includes a lower double preconnect storage area upper preconnect storage area and upper forward area for dry lay. Center front pump access doors and removable center floor in upper area.Pump module opening 23" wide for use with roll-up doors. | 3304 |
| 3125-0030 | Includes a lower double preconnect storage area sleeve in upper storage area for long handle tools and/or other transverse items with lift-up access door each side- (sleeve is removable for center pump access) center front pump access doors and removable center floor in upper area. Upper area recessed at depth of front eMAX body storage pan. | 3060 |

| Item No. | Description | |
|---|---|---|
| 3125-0031 | eMAX Forward body configuration for use with a (2) arm ladder rack. - SM. Includes a lower double preconnect storage area upper transverse storage area and deck gun piping access center front pump access doors and removable center floor in upper area. | 3301 |
| 3125-0032 | eMAX Forward body configuration - SM. Includes a lower double preconnect storage area extruded boxed out upper preconnect/storage area with horizontal hinged door each side with push button latch and pull strap rack in upper storage area for (1) stokes basket (offset forward) - 84.5" long x 24" high x 7.5" deep and (1) preconnect area (offset rearward) center front pump access doors removable center floor in upper area. | 3102 |
| 3125-0033 | eMAX Forward body configuration for use with a (2) arm ladder rack and raised speedlays for 4X4 application. - SM. Includes a lower double preconnect storage area upper transverse storage area and deck gun piping access center front pump access doors and removable center floor in upper area. | 3301 |
| 3125-0034 | eMAX Forward full width body configuration - SM. Includes a lower double preconnect storage area upper full usable body width transverse storage area rack in upper storage area for (2) backboards (vertical stored offset forward and misc. storage rearward - sleeve each side of center pump access) center front pump access doors and removable center floor in upper area. e-MAX forward pump module to match body height. | 6990 |
| 3125-0036 | eMAX Forward body configuration - SM. Includes a lower double preconnect storage area upper transverse storage area an adjustable storage rack in upper storage area for (2) backboards (or similar items vertically stored offset forward - sleeve each side of center pump access) with single preconnect storage rearward center front pump access doors and removable center floor in upper area. | 2864 |
| 3125-0037 | SS eMAX forward body configuration - SM. Includes a lower double preconnect storage area sleeve in upper storage area for (1) stokes basket or other transverse items with boxed out style lift-up access doors (wired to door ajar) each side (sleeve is removable for center pump access) center front pump access doors and removable center floor in upper area. | 3574 |
| 3125-0038 | eMAX Forward Full Body Width configuration - SM. Includes a transverse double preconnect storage area one single lower and one single upper with a bolt-on partition to keep storage trays from sliding foroward. Both Trays shall accommodate a full height roll-up door on each side of body. Module also includes a center front pump access door and a removable center floor in the upper area. | 6990 |
| 3125-0039 | eMAX Forward body configuration - SM. Includes an extruded boxed out lower double preconnect storage area upper transverse storage area sleeve in upper transverse storage area with provision for roll-up door each side sleeve each side of center pump access) and (1) stokes basket (forward) - 86" long x 24.5" high x 8" deep center front pump access doors removable center floor in upper area. | 3102 |
| 3125-0040 | eMAX Forward body configuration - SM. Includes a lower double preconnect storage area extruded boxed out upper preconnect/storage area with horizontal hinged door each side with D-ring latch and pull strap rack in upper storage area for (1) stokes basket (offset forward) - 84.5" long x 24" high x 7.5" deep and (1) preconnect area (offset rearward) center front pump access doors removable center floor in upper area. | 3102 |
| 3125-0041 | eMAX Forward body configuration - SM. Includes a lower double preconnect storage area upper transverse storage area rack in upper storage area for (2) backboards (horizontally stored - sleeve each side of center pump access) center front pump access doors and removable center floor in upper area. | 3037 |
| 3125-0042 | eMAX Forward body configuration - SM. Includes a lower double preconnect storage area extruded boxed out upper preconnect/storage area with horizontal hinged smooth plate door painted job color each side with D-ring latch and pull strap rack in upper storage area for (1) stokes basket (offset forward) - 84.5" long x 24" high x 7.5" deep and (1) preconnect area (offset rearward) center front pump access doors removable center floor in upper area. | 3102 |
| 3125-0043 | SS eMAX Forward body configuration - SM. Includes a full height upper transverse storage area for miscellaneous equipment with boxed out style access door frame (full width of body). Center area to be sleeved for pump access with center front pump access door and removable center floor area. Right side door opening is narrower to allow a recessed area for the ladder lift arm. | 3341 |
| 3125-0044 | eMAX Forward full width body configuration - SM. Includes a transverse storage area for (2) stokes baskets (84.5" long X 24" wide X 7.5" deep) with a vertical divider seperating the two. The lower 15" below stokes storage floor to compartment floor for storage of long cribbing center front pump access doors removable center floor in upper area. | 6990 |
| 3125-0045 | eMAX Forward body configuration - SM. Includes a lower double pre connect storage area extruded boxed out upper transverse storage area with horizontal smooth plate painted job color hinged door each side with D-Ring style latch and pull strap rack in upper storage area for (2) back boards (vertical stored offset forward - sleeve each side of center pump access) and (1) stokes basket (offset rearward) - 84.5in. " long x 24in. high x 7.5in. deep center front pump access doors removable center floor in upper area. | 3621 |

| Item No. | Description | |
|---|---|---|
| 3125-0046 | eMAX Forward body configuration - SM. Includes a lower double preconnect storage area upper transverse storage area an adjustable storage rack in upper storage area for (2) backboards (or similar items vertically stored offset forward - sleeve each side of center pump access) with single preconnect storage rearward center front pump access doors and removable center floor in upper area. Doors to have D-Ring latches IPO thumb latches | 2864 |
| 3125-0047 | eMAX Forward body configuration - SM. Includes a lower double pre connect storage area extruded boxed out upper transverse storage area with horizontal hinged door each side with D-ring latch and pull strap rack in upper storage area for (2) backboards (vertical stored offset forward - sleeve each side of center pump access) and (1) stokes basket (offset rearward) - 84.5" long x 24" high x 7.5" deep center front pump access doors removable center floor in upper area. | 3102 |
| 3125-0049 | e-MAX Forward body configuration for use with a(2) arm ladder rack and raised speed lays for a 4x4 application - SM. Includes a lower double pre connect storage area upper transverse storage area rack in upper storage area for (2) backboards (horizontal stored in the bottom of transverse - sleeve each side of center pump access) center front pump access doors and removable center floor in upper area. | 3301 |
| 3125-0050 | SS eMAX forward body configuration - SM. Includes a lower double preconnect storage area open dunnage storage area accessible from top of body center front pump access doors and removable center floor in upper area. | 3341 |
| 3125-0051 | SS eMAX forward body configuration - SM. Includes a lower double preconnect storage area upper double preconnect storage area center front pump access doors and removable center floor in upper area. Three (3) areas to hold 250' of 1.75. Bed 4 (upper right) to hold 250' of 2.5". | 3752 |
| 3125-0052 | eMAX Forward body configuration - SM. Includes a lower double preconnect storage area upper double preconnect storage area forward area for dead lay with a lift up door (each side) to include pull strap push button latch wired to door ajar. Center front pump access doors and removable center floor in upper area. | 2738 |
| 3125-0053 | eMAX Forward body configuration - SM. Includes a lower double preconnect storage area extruded boxed out upper preconnect/storage area with horizontal hinged door each side with push button latch and pull strap rack in upper storage area for (1) stokes basket (offset rearward) - 84.5" long x 24" high x 7.5" deep and (1) deadlay area (offset forward) center front pump access doors removable center floor in upper area. | 3102 |
| 3125-0055 | eMAX Forward body configuration - SM. Includes a lower double preconnect storage area upper preconnect storage area sleeve in upper storage area for (2) backboards (vertical stored offset forward - sleeve is removable for center pump access) center front pump access doors and removable center floor in upper area.. Lower area to hold (2) 200' of 1.75" DJ and upper area to hold (1) 300' of 2.00" DJ. | 2738 |
| 3125-0056 | eMAX Forward body configuration - SM. Includes an upper and lower double preconnect storage area. Center front pump access doors and removable center floor in upper area. | 2919 |
| 3125-0057 | eMAX Forward body configuration - SM. Includes a lower double preconnect storage area upper preconnect storage area center front pump access doors and removable center floor in upper area. Lower area to hold (2) 200' of 1.75" DJ and upper area to hold (1) 200' of 2.50" DJ. | 2738 |
| 3125-0058 | eMAX Forward body configuration - SM. Includes an extruded boxed out lower double pre connect storage area extruded boxed out upper transverse storage area with horizontal smooth plate painted job color hinged door each side with D-Ring style latch and pull strap rack in upper storage area for (2) back boards (vertical stored offset forward - sleeve each side of center pump access) and (1) stokes basket (offset rearward) - 84.5in. " long x 24in. high x 7.5in. deep center front pump access doors removable center floor in upper area. | 3621 |
| 3125-0059 | eMAX Forward body configuration - SM. Includes a transverse storage area for (1) stokes baskets (84.5" long X 24" wide X 7.5" deep) with a vertical divider and center front pump access doors. | 3150 |
| 3125-0060 | eMAX Forward body configuration - SM. Includes a lower double preconnect storage area upper preconnect storage area upper backboard storage sleeve with vertical hinged door center front pump access doors and removable center floor in upper area. Lower area to hold (2) 200' of 1.75" DJ and upper area to hold (1) 200' of 2.50" DJ. | 2912 |
| 3125-0061 | SS eMAX Forward body configuration - SM. Includes one (1) lower preconnect storage area (forward) a rearward full height transverse storage area a sleeve in the upper storage area above the preconnect for (2) backboards and a Stokes basket. The storage areas will have a boxed out style access door frame (full width of body). Center area to be sleeved for pump access with center front pump access door and removable center floor area. Right side door opening is narrower to allow a recessed area for the ladder lift arm. Note; due to narrower officer side door opening rearward tranverse storage access may be limited to the drivers side only. | 3341 |
| 3125-0062 | eMAX Forward body configuration - SM. Includes extruded boxed out upper and lower transverse storage area with rack in upper storage area with horizontal partition (centered) for misc storage (offset forward - sleeve each side of center pump access) and (1) stokes basket (offset rearward) - 84.5" long x 24" high x 7.5" deep center front pump access doors removable center floor in upper area. The lower 15" below stokes storage floor to compartment floor for storage of poly boxes. | 3312 |

| Item No. | Description | |
|---|---|---|
| 3125-0063 | eMAX Forward body configuration - SM. Includes a lower double preconnect storage area upper double preconnect storage area. Center front pump access doors and removable center floor in upper area. Pump module opening 23" wide for use with roll-up doors. | 3304 |
| 3125-0064 | eMAX Forward body configuration - SM. Includes a lower double preconnect storage area extruded boxed out upper preconnect storage area upper stokes storage sleeve with vertical hinged door each side with push button latch rack in upper storage area for (1) stokes basket (offset forward) - 84.5" long x 24" high x 7.5" deep and (1) preconnect area (offset rearward) center front pump access doors removable center floor in upper area. | 3102 |
| 3130-0003 | Pump module. Includes 39" wide pump panel opening and running boards. | 5511 |
| 3130-0004 | Pump module. Includes 45" wide pump panel opening and running boards. | 5511 |
| 3130-0005 | Pump module. Includes 51" wide pump panel opening and running boards. | 5511 |
| 3130-0006 | Pump module. Includes 57" wide pump panel opening and running boards. | 5511 |
| 3130-0007 | Crosswalk module.Includes running boards (1) folding step each side and access handrails mounted on the pump module. | 1087 |
| 3130-0008 | Crosswalk module. Includes walkway storage compartments with push button latches running boards (1) folding step each side and access handrails mounted on the pump module. | 1584 |
| 3130-0009 | Speedlay module. Includes area for (2) speedlays with trays (1) area for dry storage lower storage compartments with push button latches and running boards. | 1901 |
| 3130-0010 | Transverse Module (narrow). Locate forward of pump area. Includes a single compartment opening per side (with a shallow lower area and a transverse upper area with diamond plate flooring) and running boards. | 2430 |
| 3130-0011 | Transverse Module (full width). Locate forward of pump area. Includes a single compartment opening per side (with a shallow lower area and a transverse upper area with smooth plate flooring). | 3361 |
| 3130-0012 | Upper SM pump module with double stacked double crosslays and diamond plate storage pan. | 1625 |
| 3130-0013 | Upper SM pump module with single stacked double crosslays and diamond plate storage pan. | 1625 |
| 3130-0014 | Upper SM pump module with single stacked triple crosslays and diamond plate storage pan. | 2038 |
| 3130-0015 | Upper SM pump module with single stacked double crosslay backboard storage and diamond plate storage pan. | 2769 |
| 3130-0016 | Upper TM pump module with double stacked double crosslays. | 1813 |
| 3130-0017 | Upper TM pump module with single stacked double crosslays. | 1813 |
| 3130-0018 | Upper TM pump module with single stacked double crosslays and backboard storage. | 2916 |
| 3130-0020 | Upper TM pump module with diamond plate storage pan. | 1901 |
| 3130-0021 | Upper TM pump module with backboard storage and diamond plate storage pan. | 2327 |
| 3130-0022 | Speedlay module. Includes area for (2) speedlays with trays (1) area for backboard storage with hinged doors with latches lower storage compartments with push button latches and running boards. | 3004 |
| 3130-0023 | Speedlay module. Includes area for (3) speedlays with trays lower storage compartments with push button latches and running boards. | 2314 |
| 3130-0024 | Upper SM pump module with diamond plate storage pan (only). | 1764 |
| 3130-0030 | Stainless steel pump module. Includes 39" wide pump panel opening and running boards. | 6893 |
| 3130-0031 | Stainless steel pump module. Includes 45" wide pump panel opening and running boards. | 6893 |
| 3130-0032 | Stainless steel pump module. Includes 51" wide pump panel opening and running boards. | 6893 |
| 3130-0033 | Stainless steel pump module. Includes 57" wide pump panel opening and running boards. | 6893 |
| 3130-0036 | Stainless steel Speedlay module. Includes area for (2) speedlays with trays (1) area for dry storage lower storage compartments with push button latches and running boards. | 2374 |
| 3130-0039 | Upper SM pump module with double stacked crosslays and diamond plate storage pan. | 2031 |
| 3130-0051 | Stainless Steel Upper SM pump module with diamond plate storage pan (only). | 2201 |
| 3130-0055 | Stainless steel speedlay module. Includes area for (3) speedlays with trays lower storage compartments with push button latches and running boards. | 2890 |
| 3130-0062 | Upper SM pump module with quad single stacked crosslays and diamond plate storage pan. | 2451 |
| 3130-0063 | Upper SM pump module with quad single stacked crosslays and diamond plate storage pan. The rear crosslay is for dry hose storage. | 2451 |
| 3130-0064 | Upper stainless steel SM pump module with quad single stacked crosslays and diamond plate storage pan. | 3063 |
| 3130-0065 | Upper stainless steel SM pump module with quad single stacked crosslays and diamond plate storage pan. The rear crosslay is for dry hose storage. | 3063 |
| 3130-0067 | Upper TM pump module with single stacked triple crosslays. Includes (2) dividers. | 2015 |
| 3130-0068 | Upper TM pump module with single stacked triple crosslays and backboard storage. | 3485 |
| 3130-0069 | Upper SM pump module with double stacked triple dry crosslays. Crosslay floor to be hinged and accessed from driver side. Include gas shocks hold open rod adj tracks and (2) dividers w/handhold cut-outs on both ends. | 5085 |
| 3130-0070 | Pump module. Includes lowered area for lowered upper module and 45" wide pump panel opening and running boards. | 6893 |
| 3130-0071 | Upper SM pump module with single stacked triple crosslay backboard storage and diamond plate storage pan. | 3183 |

| Item No. | Description | |
|---|---|---|
| 3130-0083 | Speedlay module. Includes area for triple speedlays with divider(s) and lower storage compartments with push button latches and running boards. | 2314 |
| 3130-0084 | Speedlay module to have (2) dividers for a triple speedlay configuration. Each divider to be notched for preconnect nozzles. Preconnect plumbing to be internal to the speedlay. | 422 |
| 3130-0086 | Driver side SM module extension for vertical exhaust. Includes forward extended running board. | 306 |
| 3130-0087 | Upper SM pump module with double crosslay with double stack set-up in single stack depth. Includes backboard storage with raised push button latches and diamond plate storage pan (open back style). Crosslay divider to be adjustable side to side with slat style flooring. | 3183 |
| 3130-0088 | Speedlay module to have (1) divider for a double configuration. The divider is to be held short for preconnect nozzle. Preconnect plumbing to be internal to the speedlay. Rearward area to be for backboard storage and includes vertically hinged doors with push-button latching. | 791 |
| 3130-0089 | Upper SM pump module with (5) single stacked crosslays- (4) 1.5" AND (1) 2.5" rearward. Includes open back style pan for generator. | 2820 |
| 3130-0090 | Pump module. Includes 63" wide pump panel opening and running boards. | 5511 |
| 3130-0093 | Upper SM pump module with double stacked triple crosslays and diamond plate storage pan. | 2221 |
| 3130-0095 | Crosswalk module. Includes walkway storage compartments with push button latches running boards (1) diamond plate gator grip step each side and access handrails mounted on the pump module. | 1830 |
| 3130-0096 | Speedlay module(stacked). Includes area for (2) stacked speedlays and (1) upper speedlay (crosslay style) lower storage compartments with push button latches and running boards. Lower speedlay upper speedlay and crosslay. | 2580 |
| 3130-0098 | Speedlay module full width. Includes area for (4) speedlays (2) speedlays (stacked) per side with partition in center of module. Includes lower storage compartments with push button latches. | 4200 |
| 3130-0099 | Pump module. Includes 45" wide pump panel opening and running boards. Interior of module to have 70" width. | 5511 |
| 3130-0100 | Upper SM pump module with triple single stacked crosslays and diamond plate storage pan. Module is for use with a wider lower module base. To include a non-stepped pan with 1.5" extrusion rearward and narrow crosslay widths. | 2038 |
| 3130-0101 | Upper SM pump module with single stacked double crosslay backboard storage and diamond plate storage pan. Interior to be 70" wide to match lower module. | 2769 |
| 3130-0102 | Speedlay module(stacked). Includes area for (2) speedlays lower storage compartments with push button latches and running boards. | 2314 |
| 3130-0103 | Speedlay module. Includes area for (2) speedlays with center divider lower storage compartments with push button latches and running boards. | 1901 |
| 3130-0104 | Top mount enclosed pump module. Includes full width single crosslay backboard storage and storage pan with push button latches and enclosed side pump panels with AM Roll-Up Doors. | 15553 |
| 3130-0106 | Upper pump module. Includes double double stacked crosslay area (rearward of module). Forward area to have storage for tools and backboards (horizontally stored). To include diamond plate hinged doors on sides (vertically hinged). The upper are is to have a diamond plate top. | 5349 |
| 3130-0107 | Speedlay module. Includes area for (2) speedlays with dividers (1) area for backboard storage with hinged doors with latches lower storage compartments with push button latches and running boards. | 3004 |
| 3130-0108 | Upper TM pump module with double stacked triple crosslays (single stack depth). | 2916 |
| 3130-0109 | Upper TM pump module with single stacked single crosslay backboard storage and diamond plate storage pan. 2.5" crosslay to be rearward of the backboard storage. | 2916 |
| 3130-0111 | Upper SM pump module with single stacked triple crosslay backboard storage and diamond plate storage pan. | 3978 |
| 3130-0112 | Pump Module. Includes 61" wide pump panel opening and running boards. Required with CAFS system. Interior of module to have 70" width. | 5511 |
| 3130-0113 | TM Pump Module. Includes triple crosslay area (crosslays to be 4.25"-divider-4.25"-divider-4.25" dry lay with stops provided bottom of crosslay to be max of 60.5" from ground level with air suspension lowered. In reference to stops provided. Preconnect 1 will be enclosed on driver's side and preconnect 2 will be enclosed on officer's side). Walkway on this module is wider front to rear than standard and the walkway is incorporated into the main module. Driver and Officer runningboard hose trays to be angled and "floating" style.. | 9508 |
| 3130-0114 | Pump module. Includes 51" wide pump panel opening and running boards. Interior of module to have 70" width. | 5607 |
| 3130-0115 | Upper SM pump module with single stacked double crosslays and diamond plate storage pan. Interior of module to have 70" width. | 1625 |
| 3130-0116 | Pump module. Includes 39" wide pump panel opening and running boards. Interior of module to have 70" width. | 5607 |
| 3130-0119 | Upper TM pump module with diamond plate storage pan. Interior to be 70" wide to match lower module. | 1901 |
| 3130-0164 | Upper SM pump module with double stacked triple crosslays (single stacked depth) and diamond plate storage pan. | 4713 |

| Item No. | Description | |
|---|---|---|
| 3130-0165 | Upper SM pump module with (5) single stacked crosslays. (4) single stacked 1.5" crosslays (1) single stacked 2.5" crosslay rearward and diamond plate storage pan. | 2820 |
| 3130-0168 | Upper SM pump module with triple single stacked crosslays and wide dry crosslay storage area. The area rearward of crosslays is for deck gun channel. | 8290 |
| 3130-0169 | Transverse module to hold: Lower section (1) Stokes basket and (2) backboards. Upper section to hold miscellaneous long handled tools. | 672 |
| 3130-0170 | Upper SM pump module with double stacked (dry) crosslays and diamond plate storage pan. | 1625 |
| 3130-0171 | Transverse Module (narrow). Locate forward of pump area. Includes a single compartment opening per side (with a shallow lower area and a transverse upper area with diamond plate flooring) and running boards. Upper area for triple stacked double crosslay. Transverse floor to be over framerails only do not extend over tool compartments. | 4387 |
| 3130-0172 | Upper SM pump module with triple stacked double crosslays and diamond plate storage pan. | 2916 |
| 3130-0173 | Stainless steel speedlay module. Includes area for (2) speedlays with center divider lower storage compartments with push button latches and running boards. | 2375 |
| 3130-0174 | Pump module for top mount enclosed operation. Includes 57" panel opening and area for double stacked double crosslay with storage pan. Module has sanded finish and crosslay floors are slotted for draining. | 10947 |
| 3130-0175 | Raised crosswalk module. Includes walkway storage compartments with push button latches running boards (1) diamond plate walkway step w/gator grip each side and access handrails mounted on the pump module. Includes 8" raise with 5" high storage compartment with drop down diamond plate doors with push button latches. | 3066 |
| 3130-0176 | Upper TM pump module with double stacked double crosslays with backboard storage. | 3819 |
| 3130-0177 | Upper SM pump module with backboard storage and diamond plate storage pan. Backboard storage to be located rearward of storage pan. Deck gun channel to be located between pan and back board compartment. | 2664 |
| 3130-0179 | Speedlay module(stacked). Includes area for (2) stacked speedlays and (1) upper storage compartment lower storage compartments with push button latches and running boards. Lower 1.75 speedlay and upper 2.5 speedlay. Single diamond plate cover for upper storage area. Includes (1) grab handle and (2) hold downs. | 4008 |
| 3130-0180 | Transverse Module (narrow). Locate forward of pump area. Includes a single compartment opening per side (with a shallow lower area and a transverse upper area with diamond plate flooring) and running boards. Upper area for single stacked triple crosslay. | 4387 |
| 3130-0181 | Pump/Speedlay Module. Includes area for runningboards upper side stainless steel panels (2) removable speedlay trays and upper dunage storage pan. | 12714 |
| 3130-0182 | Upper SM pump module with triple crosslays (single stacked depth) and diamond plate storage pan. Forward crosslays to be double stacked and rearward crosslay to be single stacked dry lay. | 5126 |
| 3130-0183 | Upper SM pump module with double stacked triple crosslays and diamond plate storage pan. Upper module to be full width as applicable to match lower module. | 4897 |
| 3130-0184 | Pump module top mount with speedlays. Includes 41" wide pump panel opening dunnage pan and running boards. Raised top mount walkway includes storage compartments with D-Ring latches (1) 5" diamond plate top mount walkway step with gator grip each side and access handrails mounted on the pump module. Raised walkway for backboard storage includes diamond plate door with push button latches. Includes area for (2) speedlays with 1.5" plumbing. Driver and Officer side upper pump access panels to be horizontally hinged with diamond plate doors. Includes (2) D-Ring latches and (2) gas shock hold opens for each. | 10880 |
| 3130-0186 | Upper TM pump module with double stacked single 2.5" crosslay. Includes area for dry crosslay storage rearward of 2.5". | 2916 |
| 3130-0187 | Upper SM pump module with triple single stacked crosslays and diamond plate storage pan. Each crosslay to be 6" wide for nozzle storage. | 2300 |
| 3130-0188 | Upper TM pump module with single stacked quad crosslays. Includes (3) dividers. | 2220 |
| 3130-0189 | Upper SM pump module with backboard storage and diamond plate storage pan. Backboard storage to be located forward of storage pan. | 2664 |
| 3130-0190 | Top Mount Pump Module. Includes area for single stacked double crosslay (notched divider) and TM walkway with folding steps with intergral lights and (2) vertical handrails. | 2185 |
| 3130-0191 | Top Mount Pump Module. Includes area for single stacked triple crosslay (notched dividers) and TM walkway with folding steps with integral lights and (2) vertical handrails. | 2651 |
| 3130-0193 | Side Mount Pump Module. Includes area for single stacked triple crosslay (notched dividers). | 473 |
| 3130-0194 | Top Mount Pump Module. Includes area for a double speedlay and TM walkway with folding steps with integral lights and (2) vertical handrails. | 3456 |
| 3130-0195 | Top Mount Pump Module. Includes area for a double speedlay single crosslay and TM walkway with folding steps with integral lights and (2) vertical handrails. | 3922 |
| 3130-0196 | Upper SM pump module with single stacked double crosslay backboard storage and diamond plate storage pan. Backboard storage opening to be 6.5" wide. | 4778 |
| 3130-0197 | Upper SM pump module with double stacked double crosslay for 400' of 1.75" hose in each crosslay backboard storage and diamond plate storage pan. | 5445 |
| 3130-0198 | Upper TM pump module with single stacked double crosslays. Each crosslay to hold 100' of 3" DJ. | 4489 |

| Item No. | Description | |
|---|---|---|
| 3130-0199 | Upper SM pump module with single stacked triple crosslays and diamond plate storage pan. (2) Backboard and Ferno model 6 or EXL scoop stretcher storage box located below the storage pan with lift-up diamond plate door with thumb latches each side. Upper module to be full width as applicable to match lower module. | 6041 |
| 3130-0200 | Transverse Module (narrow). Locate forward of pump area. Includes a single compartment opening per side (with a shallow lower area and a transverse upper area with diamond plate flooring) and running boards. Upper area for single stacked quad crosslay. Plumbing to terminate thru outboard extrusion as follows: #1 driver side #2 officer side #3 driver side and #4 officer side. | 6444 |
| 3130-0201 | Upper SM pump module with 2.5" double stacked double crosslay and diamond plate storage pan. Both preconnects to be offset to officer side of module. | 5639 |
| 3130-0202 | Speedlay module(stacked). Includes area for (3) speedlays lower storage compartments with push button latches and running boards. | 2580 |
| 3130-0203 | Transverse Module (narrow). Locate forward of pump area. Includes a single compartment opening per side (with a shallow lower area and a transverse upper area with diamond plate flooring) and upper area for triple stacked double crosslay with backboard storage. | 5195 |
| 3130-0204 | Pump module for top mount enclosed operation. Includes 47" panel opening area for double stacked single crosslay area for double stacked double speedlay with trays stacked side by side lower storage compartments with D-ring latches and running boards. Crosslay floor to be slotted for draining. Includes backboard storage forward of crosslay. Includes deck gun channel and open back storage pan rearward of crosslay. | 14181 |
| 3130-0205 | Upper TM pump module with backboard storage and diamond plate storage pan. Backboard storage located rearward of storage pan. | 2327 |
| 3130-0206 | Upper SM pump module with 2.5" double stacked double crosslays and diamond plate storage pan. | 5033 |
| 3130-0207 | Transverse Module (narrow). Locate forward of pump area. Includes a single compartment opening per side (with a shallow lower area and a transverse upper area with diamond plate flooring) and running boards. Upper area for double stacked double crosslay. | 5056 |
| 3130-0208 | Pump/Speedlay Module. Includes area for E-ONE supplied runningboards (2) removable speedlay trays and upper diamond plate panels/doors for access to (2) horizontally stored backboards. | 13205 |
| 3130-0209 | Crosswalk module. Includes walkway storage compartments with D-ring latches running boards (1) folding step each side and access handrails mounted on the pump module. | 1908 |
| 3130-0210 | Speedlay module. Includes area for (2) speedlays with trays (1) area for backboard storage with hinged doors with latches lower storage compartments with D-ring latches and running boards. Speedlays to hold 250' of 1.75" DJ hose. | 3783 |
| 3130-0211 | Upper SM pump module with quad single stacked crosslays and diamond plate storage pan. Preconnects to located as follows: Preconnects 1 and 3 to be offset to officer side Preconnects 2 and 4 to be offset to driver side. Crosslays to be 66" high from ground. Includes diamond plate access door on officer side of module with push button latches. | 4457 |
| 3130-0212 | Pump module. Includes 57" wide pump panel opening and running boards. Crosslays to be 66" high from ground. | 6851 |
| 3130-0214 | Upper SM pump module with single stacked single crosslay and diamond plate storage pan. | 4705 |
| 3130-0215 | Transverse Module (full width). Locate forward of pump area. Includes a single compartment opening per side (with a shallow lower area and a transverse upper area with diamond plate flooring). Upper area for double stacked double crosslay. | 4368 |
| 3130-0216 | Upper SM pump module with double stacked triple crosslays and diamond plate storage pan. | 7388 |
| 3130-0217 | Speedlay module(stacked). Includes area for (3) 1.75" speedlays lower storage compartments with push button latches and running boards. Upper speedlay to be dry lay. | 2580 |
| 3130-0218 | Upper TM pump module with 2.5" triple stacked single crosslay. | 4692 |
| 3130-0219 | Enclosed Pump Module with Triple Speedlays. Includes 45" wide pump panel opening. Includes area for (3) speedlays with trays lower storage compartments with push button latches forward of pump panel opening. Upper module area to have storage pan. | 19609 |
| 3130-0220 | TM Upper module. Includes wide pan and open back style for special reel requirement. | 4575 |
| 3130-0221 | TM Pump Module. Includes triple crosslay area (crosslays to be 4.25"-divider-4.25"-divider-4.25") Rearward crosslay to be for a dry lay. Bottom of crosslay to be max of 60.5" from ground level with air suspension lowered. Walkway on this module is wider front to rear than standard and the walkway is incorporated into the main module. Driver and Officer runningboard hose trays to be angled and "floating" style. Special top mount diamond plate walkway access steps. Each step to be positioned where top stepping surface is centered between top of runningboard and top of walkway. | 9697 |
| 3130-0222 | Upper TM pump module with single stacked double crosslays. Rearward crosslay to hold 2.5" DJ hose. | 2413 |
| 3130-0224 | Upper TM pump module with single stacked triple crosslays dunnage storage pan and backboard storage. Storage pan located between T/M panel and backboard storage. | 4324 |

| Item No. | Description | |
|---|---|---|
| 3130-0225 | Pump module. Includes 45" wide pump panel opening and running boards. Includes area forward of pump panel opening for (2) speedlays (stacked) lower storage compartments with push button latches. | 9358 |
| 3130-0226 | Upper SM pump module with double stacked double crosslay (single stack depth) and diamond plate storage pan. Built in compartment on officer side of module rearward of crosslays. Compartment dimensions to be approx. 18.5"W x 20"H x 20"D includes stainless steel door with push button latches. Storage pan to be stepped around compartment. Crosslay divider to be adjustable side to side. | 4635 |
| 3130-0227 | Pump module. Includes lowered area for lowered upper module and 51" wide pump panel opening and running boards. | 6893 |
| 3130-0228 | Upper SM pump module with single stacked double crosslay backboard storage and diamond plate storage pan. 2.5" plumbing for rear crosslay. | 3419 |
| 3130-0229 | Speedlay module. Includes area for triple speedlays with divider(s) and lower storage compartments with push button latches and running boards. | 3586 |
| 3130-0230 | One piece side mount pump module with (2) 4.25" and (1) 5.5" single stacked triple crosslays and diamond plate storage pan. Includes 76" wide (side to side) module with a 45.5" wide pump panel opening and running boards. | 7547 |
| 3130-0231 | Speedlay module. Includes area for triple speedlays with divider(s) and lower storage compartments with D-ring latches and running boards. | 2554 |
| 3130-0232 | Speedlay module(stacked). Includes area for (3) speedlays lower storage compartments with push button latches and running boards. | 3147 |
| 3130-0233 | Speedlay module. Includes area for triple speedlays with divider(s) and lower storage compartments with push button latches and running boards. Forward speedlay to have 2.5" plumbing. | 2615 |
| 3130-0234 | Pump module. Includes 45.5" wide pump panel opening and running boards. Lowered to 45.5" high to allow approx 69" high crosslay height from ground. | 6811 |
| 3130-0236 | Upper SM pump module with double stacked double crosslays and diamond plate storage pan. Storage pan to be open back style. | 5245 |
| 3130-0237 | Upper TM pump module with 2.5" double stacked single crosslay. | 1813 |
| 3130-0238 | Speedlay module. 48"H IPO 54.5"H so as not to block rear windows. Includes area for (2) speedlays with center divider lower storage compartments with push button latches and running boards. | 3612 |
| 3130-0239 | Upper TM pump module with single stacked double crosslays and diamond plate storage pan. | 2652 |
| 3130-0240 | Pump module. Includes 51" wide pump panel opening and running boards. Includes modifications for 4x4 and plumbing applications as required. | 6892 |
| 3130-0241 | Upper SM pump module with single stacked triple crosslay backboard storage and diamond plate storage pan. Includes 8"W x 8"H storage rearward of the backboard storage and below the storage pan. | 5597 |
| 3130-0242 | Speedlay module(stacked). Includes area for (2) stacked speedlays and (1) upper speedlay (crosslay style) lower storage compartments with push button latches and running boards. Lower speedlay upper speedlay and crosslay. For use with removable or slide-master tray(s). | 3217 |
| 3130-0243 | Transverse Module (narrow). Locate forward of pump area. Includes a single compartment opening per side (with a shallow lower area and a transverse upper area with diamond plate flooring) and running boards. Upper area for triple stacked double crosslay. Includes backboard storage in transverse upper for (5) backboards each backboard slot be approx. 3" wide. | 6197 |
| 3130-0246 | Upper SM pump module with single stacked triple crosslay backboard storage and diamond plate storage pan. Forward (2) crosslay to be 6" wide and the rearward crosslay to be 6.75" wide. | 4993 |
| 3130-0247 | Upper SM pump module with triple crosslays and diamond plate storage pan. Forward (2) crosslays to be single stack and rearward crosslay to be double stack. | 4566 |
| 3130-0248 | Pump module - one piece. Includes 45.5" wide pump panel opening and running boards. | 5511 |
| 3130-0249 | Single stacked triple crosslays and diamond plate storage pan. Crosslays 5.5" wide each to hold 200'-1.75"DJ or 150-200'-2.5"DJ. | 2038 |
| 3130-0250 | Pump module. Includes 45" wide pump panel opening. Running boards to be smooth plate with gator grip and painted black duraback. | 6233 |
| 3130-0252 | Upper SM pump module with double stacked single crosslay and diamond plate storage pan. Crosslay to be dry lay. | 3436 |
| 3130-0254 | Pump module. Includes 75" wide pump panel opening and running boards. | 5511 |
| 3130-0257 | Crosslay plumbing to be run thru a channel on each side of forward upper corner of the lower module. Preconnects to located as follows: Preconnects 1 and 3 to be offset to officer side Preconnect 2 to be offset to driver side. The plumbing channel to be the width of the crosslay opening. The plumbing channels may require the pump panel and/or pump access door(s) to be modified for clearance. | 1342 |
| 3130-0259 | Pump module. Includes 51" wide pump panel opening and running boards. Lowered to allow 70" high crosslay height from ground. | 6719 |
| 3130-0264 | Upper SM pump module with single stacked triple crosslays and diamond plate storage pan. Storage pan to be open back style. | 2038 |

| Item No. | Description | |
|---|---|---|
| 3130-0265 | Transverse Module (narrow). Locate forward of pump area. Includes a single compartment opening per side (with a shallow lower area and a transverse upper area with diamond plate flooring) and running boards. Upper area for triple crosslay forward (2) crosslays to be single stacked and rearward crosslay to be double stacked. | 5328 |
| 3130-0266 | Transverse Module (narrow). Locate forward of pump area. Includes a single compartment opening per side (with a shallow lower area and a transverse upper area with diamond plate flooring) and running boards. Upper area for double stacked double crosslay. | 5056 |
| 3130-0271 | Upper SM pump module with triple crosslays and diamond plate storage pan. Forward (2) crosslays to be single stack and rearward crosslay to be double stack. Crosslay plumbing to be located centered in place of outboard. | 4566 |
| 3130-0273 | Pump module. Includes 51" wide pump panel opening and running boards. Crosslays to be 73" high from ground. | 7925 |
| 3130-0274 | Upper SM pump module with double stacked (single stack depth) double crosslays and diamond plate storage pan. Front headboard stepped down 5" to allow 18" deep crosslays. | 3245 |
| 3130-0275 | Upper SM pump module with single stacked double crosslay backboard storage and diamond plate storage pan. Storage pan to be open back style due to Honda Generator. Storage pan to be 15.75" deep with 3" extrustions to step up generator for air flow. | 3977 |
| 3130-0276 | Speedlay module. Includes area for triple speedlays with divider(s) and lower storage compartments with push button latches and running boards. Speedlay module tool compartments to be 20" high. | 3218 |
| 3130-0277 | Speedlay module. Includes area for (2) speedlays with trays lower storage compartments with push button latches and running boards. | 2142 |
| 3130-0278 | Pump module. Includes 45" wide pump panel opening and running boards. Includes area forward of pump panel opening for (2) speedlays (stacked) lower storage compartments with push button latches | 8152 |
| 3130-0279 | Upper TM pump module with double stacked single crosslay and backboard storage. Crosslay to be rearward of the backboard storage. Crosslay to hold 3" DJ hose. | 4785 |
| 3130-0280 | Upper SM pump module with single stacked triple crosslay backboard storage and diamond plate storage pan. Rearward crosslay to be double stacked for extra capacity. | 4993 |
| 3130-0281 | Stainless steel 46" wide lower pump module. Includes side running boards with Gator Grip. | 5511 |
| 3130-0282 | Stainless steel 46" wide lower pump module. Includes side running boards with Bustin Tread inserts. | 5511 |
| 3130-0284 | Stainless steel 50" wide lower pump module. Includes side running boards with Bustin Tread inserts. | 5511 |
| 3130-0285 | Stainless steel 54" wide lower pump module. Includes side running boards with Gator Grip. | 5511 |
| 3130-0286 | Stainless steel 54" wide lower pump module. Includes side running boards with Bustin Tread. | 5511 |
| 3130-0287 | Stainless steel 60" wide lower pump module. Includes side running boards with Gator Grip. This size required for most CAFS units. | 5511 |
| 3130-0288 | Stainless steel 60" wide lower pump module. Includes side running boards with Bustin Tread. This size required for most CAFS units. | 5511 |
| 3130-0289 | Upper SM stainless steel pump module with single stacked double crosslays and top open storage with treadplate flooring. | 1625 |
| 3130-0290 | Upper SM stainless steel pump module with double stacked double crosslays and top open storage with treadplate flooring. | 1625 |
| 3130-0291 | Upper SM stainless steel pump module with single stacked triple crosslays and top open storage with treadplate flooring. | 2038 |
| 3130-0292 | Upper SM stainless steel pump module with double stacked triple crosslays and top open storage with treadplate flooring. | 2038 |
| 3130-0293 | Upper SM stainless steel pump module with single stacked double crosslays and a backboard with top open storage with treadplate flooring. | 2769 |
| 3130-0294 | Upper SM stainless steel pump module with double stacked double crosslays and a backboard plus top open storage with treadplate flooring. | 2769 |
| 3130-0295 | Upper SM stainless steel pump module with single stacked triple crosslays and a backboard with top open storage with treadplate flooring. | 3183 |
| 3130-0296 | Upper SM stainless steel pump module with double stacked triple crosslays and a backboard with top open storage with treadplate flooring. | 3183 |
| 3130-0297 | Upper SM stainless steel pump module without crosslays. Top open storage only with treadplate flooring. For use with crosslays mounted on top of a front of pump transverse storage module or with preconnects in the main hose bed or as otherwise specified. | 1764 |
| 3130-0298 | Upper TM stainless steel pump module with single stacked double crosslays and top open storage with treadplate flooring. | 1813 |
| 3130-0299 | Upper TM stainless steel pump module with single stacked double crosslays and a backboard with top open storage (if space available) with treadplate flooring. | 2916 |
| 3130-0300 | Upper TM stainless steel pump module without crosslays. Top open storage only with treadplate flooring. For use with various preconnected discharge options. | 1901 |

| Item No. | Description | |
|---|---|---|
| 3130-0301 | Speedlay module. Includes area for (2) speedlays (1) area for backboard storage with hinged doors with latches stainless steel lower storage compartments with push-button latches and running boards. | 3004 |
| 3130-0302 | Speedlay module. Includes area for (3) speedlays stainless steel lower storage compartments with push-button latches and running boards. | 2314 |
| 3130-0303 | Speedlay module. Includes area for (2) 1-3/4" speedlays with a sliding tray and center divider stainless steel lower storage compartments with push-button latches and running boards. | 1901 |
| 3130-0304 | Speedlay module. Includes area for (2) speedlays with dividers (1) area for backboard storage with hinged doors with latches stainless steel lower storage compartments with push button latches and running boards. | 3004 |
| 3130-0305 | Speedlay module. Includes area for triple speedlays with dividers and stainless steel lower storage compartments with push-button latches and running boards. | 2314 |
| 3130-0306 | Transverse Module (narrow). Located forward of pump area. Includes a single stainless steel compartment opening per side (with a shallow lower area and a transverse upper area with SS flooring) and running boards with Gator Grip. | 2430 |
| 3130-0307 | Transverse module (20" wide) with brushed stainless steel doors. Located forward of pump area and welded integral. Includes a single stainless steel compartment opening per side (with a shallow lower area and a transverse upper area) and side running boards with Bustin Tread. | 2430 |
| 3130-0308 | Crosswalk module. Includes stainless steel walkway storage compartments with lift-up access lids and butterfly latches non-skid running boards with Bustin Tread and access hand rails mounted one each side to the front of the pump enclosure assembly. | 1584 |
| 3130-0309 | Speedlay module (stacked). Module to be full width. Includes area for (2) stacked speedlays and (1) upper speedlay (crosslay style) lower storage compartments with push button latches and running boards. Lower speedlay upper speedlay and crosslay. For use with removable or slide-master tray(s). | 4665 |
| 3130-0312 | Upper SM pump module with double stacked double crosslay and diamond plate storage pan. Area rearward of crosslays to be raised 12" due to ladder tunnel above the tank. | 4993 |
| 3130-0313 | Pump module. Includes 51" wide pump panel opening and running boards. Crosslays to be 66" high from ground. | 6851 |
| 3130-0314 | Pump module. Includes 39" wide pump panel opening and running boards. Includes area forward of pump panel opening for (2) speedlays (stacked) lower storage compartments with push button latches. | 9358 |
| 3130-0315 | Pump module. Includes 57" wide pump panel opening and running boards. Includes modifications for 4x4 and plumbing applications as required. | 6892 |
| 3130-0318 | Upper SM pump module with double stacked (single stacked depth) double crosslays and diamond plate storage pan. | 2038 |
| 3130-0319 | Upper SM pump module with triple crosslays (single stacked depth) and diamond plate storage pan. Forward crosslays to be double stacked and rearward crosslay to be single stacked dry lay. | 2750 |
| 3130-0320 | Pump module. Includes 45" wide pump panel opening and running boards. Lowered to allow 70" high crosslay height from ground. | 6719 |
| 3130-0321 | Pump module. Includes 51" wide pump panel opening and running boards. Includes area forward of pump panel opening for (2) speedlays (stacked) lower storage compartments with push button latches. For use with removable or slide-master tray(s). | 9600 |
| 3130-0322 | Pump module. Includes 33" wide pump panel opening and running boards. | 5511 |
| 3130-0323 | Pump module. Includes 39" wide pump panel opening and running boards. Includes modifications for 4x4 and plumbing applications as required. | 6892 |
| 3130-0326 | Top Mount Pump Module. Includes area for single stacked double crosslay (notched divider) and TM walkway with dual lighted LED folding steps with intergral lights and (2) vertical handrails. | 2185 |
| 3130-0327 | Top Mount Pump Module. Includes area for single stacked triple crosslay (notched dividers) and TM walkway with dual lighted LED folding steps with integral lights and (2) vertical handrails. | 2651 |
| 3130-0328 | Top Mount Pump Module. Includes area for a double speedlay and TM walkway with dual lighted LED folding steps with integral lights and (2) vertical handrails. | 3456 |
| 3130-0329 | Top Mount Pump Module. Includes area for a double speedlay single crosslay and TM walkway with dual lighted LED folding steps with integral lights and (2) vertical handrails. | 3922 |
| 3130-0330 | Crosswalk module. Includes running boards (1) dual lighted LED folding step each side and access handrails mounted on the pump module. | 1087 |
| 3130-0331 | Crosswalk module. Includes walkway storage compartments with push button latches running boards (1) dual lighted LED folding step each side and access handrails mounted on the pump module. | 1584 |
| 3130-0332 | Speedlay module(stacked). Includes area for (2) stacked speedlays and (1) upper speedlay (crosslay style plumbing to be offset to driver side) lower storage compartments with push button latches and running boards. Lower speedlay upper speedlay and crosslay. For use with removable or slide-master tray(s). | 3217 |
| 3130-0333 | Upper SM pump module with bolt-on top. Includes bracing below bolt-on top for light tower mounting. Vertically hinged stainless steel panels with push button latches on each side of the module. | 1764 |

| Item No. | Description | |
|---|---|---|
| 3130-0362 | Crosswalk module.Includes running boards (1) dual lighted LED folding step each side and access handrails mounted on the pump module. Diamond plate walkway plate to be 20" wide due to 2-door Freightliner DEF tank. | 1087 |
| 3130-0364 | Special Top Mount Pump Module. Includes area for a double speedlay and TM walkway with dual lighted LED folding steps with integral lights and (2) vertical handrails. Extend-a-gun piping located in the dunnage pan offset to officer side. | 4664 |
| 3130-0365 | Upper top mount triple speedlays and storage in remaining area. | 3020 |
| 3130-0366 | Speedlay module full width wtih stokes basket and backboard storage. Includes area for (2) speedlays lower storage compartments with push button latches. Upper area of module to hold (1) stokes basket and (2) backboards. Includes vertically hinged smooth plate door(s) with push button latches. | 4858 |
| 3130-0367 | Upper SM pump module with 2.5" double stacked single crosslay and diamond plate storage pan. 300' of 2.5" DJ | 2038 |
| 3130-0368 | Pump module. Includes 51" wide pump panel opening and running boards. Upper SM pump module with single stacked double crosslays with diamond plate storage pan. Crosslays to be 68" high from ground. | 7491 |
| 3130-0377 | Upper SM pump module with single stacked triple crosslays and diamond plate storage pan. Rearward crosslay to be double stacked dry lay. | 3245 |
| 3130-0378 | Pump module. Includes 33" wide pump panel opening and running boards. Includes modifications for front headboard due to special exhaust routing. | 6892 |
| 3130-0379 | Pump module. Includes 51" wide pump panel opening and running boards. Running boards to include gator grip and be painted black duraback. | 6137 |
| 3130-0380 | Raised crosswalk module. Includes walkway storage compartments with push button latches running boards (1) smooth plate walkway step w/gator grip each side and access handrails mounted on the pump module. Includes 8" raise with 5" high storage compartment with drop down aluminum smooth plate doors with push button latches. T/M walkway and walkway access steps to be smooth plate gator grip to be painted black durabak. All access doors on module to be painted gray zolatone. | 3799 |
| 3130-0382 | Pump module. Includes 51" wide pump panel opening and running boards. Includes area forward of pump panel opening for (2) speedlays (stacked) lower storage compartments with push button latches. | 9358 |
| 3130-0383 | Pump module. Includes 57" wide pump panel opening and running boards. Crosslays to be 70" high from ground. | 6851 |
| 3130-0385 | Pump module. Includes 45" wide pump panel opening and running boards. Includes area forward of pump panel opening for (3) speedlays (stacked) lower storage compartments with push button latches. | 9967 |
| 3130-0386 | Pump module. Includes 69" wide pump panel opening and running boards. | 5511 |
| 3130-0388 | Crosswalk module with running boards. Includes upper walkway storage compartments with embossed diamond plate lift-up walkway lids (includes gas shock(s) as required to hold the lids at 90 degrees with butterfly style latch(es) for securing in the closed position). Compartments to be large as possible and include (1) light each (match body compartments for brand and type of light)and door ajar indicator wiring. Outboard sides of walkway to have diamond plate panels and each includes (1) intermediate style step and access handrails mounted on the pump module. | 2501 |
| 3130-0389 | Pump module. Includes 57" wide pump panel opening and running boards. Includes area forward of pump panel opening for (3) speedlays (stacked) lower storage compartments with push button latches. For use with removable tray(s). | 8759 |
| 3130-0390 | Upper SM pump module with triple crosslays and diamond plate storage pan. Forward (2) crosslays to be single stack and rearward crosslay to be double stack. | 4566 |
| 3130-0391 | Upper TM pump module with single stacked triple crosslays. Forward (2) crosslays to be single stack and rearward crosslay to be double stack. | 2547 |
| 3130-0392 | Upper TM pump module with single stacked double crosslays and backboard storage. Crosslays to be 6" wide each. | 3218 |
| 3130-0393 | Pump module. Includes 45" wide pump panel opening and running boards. Lowered to allow 72" high crosslay height from ground. | 5511 |
| 3130-0394 | Pump module. Includes 39" wide pump panel opening and running boards. Includes area forward of pump panel opening for (2) speedlays (stacked) lower storage compartments with push button latches. For use with removable or slide-master tray(s). | 9600 |
| 3130-0395 | Upper TM pump module with double stacked double crosslays with backboard storage. | 2949 |
| 3130-0396 | Upper SM pump module with double stacked (single stack depth) double crosslays and diamond plate storage pan. | 2451 |
| 3130-0397 | Upper SM stainless steel pump module with single stacked triple crosslays and top open storage with treadplate flooring. Crosslay 1 to be a dead lay. | 2038 |
| 3130-0398 | Pump module. Includes 45" wide pump panel opening and running boards. Includes area forward of pump panel opening for (2) speedlays (stacked) lower storage compartments with push button latches. For use with removable or slide-master tray(s). | 9600 |

| Item No. | Description | |
|---|---|---|
| 3130-0399 | Pump module for top mount enclosed operation. Includes 51" panel opening area for double stacked double speedlay with trays stacked side by side lower storage compartments with push button latches and running boards. Speedlay floor to be slotted for draining. Includes backboard storage for (3) backboards. Includes deck gun channel and open back storage pan. | 14181 |
| 3130-0400 | Pump module. Includes 51" wide pump panel opening and running boards. Lowered to allow 72" high crosslay height from ground. | 6064 |
| 3130-0403 | Upper SM pump module with single stacked triple crosslays and transverse storage area rearward of deckgun channel with stainless steel lift-up door with push button latches on driver side. | 2928 |
| 3130-0409 | Pump module. Includes 31" wide pump panel opening and running boards. | 5511 |
| 3130-0413 | Upper SM pump module with single stacked triple crosslays deck gun channel and transverse storage area. Transverse storage area to be rearward of the deck gun channel. Includes vertically hinged diamond plate doors with butterfly latches doors to be hinged rearward. | 3571 |
| 3130-0414 | Enclosed Pump Module with Triple Speedlays. Includes 51" wide pump panel opening. Includes area for (3) speedlays with trays lower storage compartments with push button latches forward of pump panel opening. Upper module area to have storage pan. | 19609 |
| 3130-0415 | Upper SM pump module with single stacked triple crosslays and diamond plate storage pan. Each crosslay to be 4.75" wide. | 2038 |
| 3130-0419 | Pump module. Includes 39" wide pump panel opening and running boards. Includes modifications for front headboard due to special exhaust routing. | 6892 |
| 3130-0420 | Upper SM pump module with double stacked triple crosslays and diamond plate storage pan. Crosslay plumbing to be located as far outboard as possible. | 2221 |
| 3130-0422 | Pump module. Includes 45" wide pump panel opening and running boards. Includes area forward of pump panel opening for (3) speedlays (stacked) lower storage compartments with push button latches. For use with removable tray(s). | 9967 |
| 3130-0424 | Upper SM pump module with single stacked double crosslays and diamond plate open back storage pan. | 1625 |
| 3130-0426 | Upper TM pump module with diamond plate open back storage pan. | 2142 |
| 3130-0427 | Upper SM pump module with backboard storage and diamond plate storage pan. Backboard storage to be located forward of storage pan. Backboard storage to be 12" wide and includes divider 4" off forward wall to create two storage spaces. | 2988 |
| 3130-0428 | Upper TM pump module with storage area with horizontally hinged access door (wired to door ajar) with push button latches one each side. | 2912 |
| 3130-0430 | Pump module. Includes 39" wide pump panel opening and running boards. Upper SM pump module with double stacked double crosslays. Crosslays to be 66" high from ground. | 7775 |
| 3130-0431 | Pump module. Includes 45" wide pump panel opening and running boards. Upper SM pump module with double stacked double crosslays with diamond plate storage pan. Crosslays to be 66" high from ground. | 7491 |
| 3130-0432 | Pump module for top mount enclosed operation. Includes 80" panel opening and area for double stacked double crosslay with storage pan. Module has sanded finish and crosslay floors are slotted for draining. | 10947 |
| 3130-0436 | Upper SM pump module with single stacked double crosslays and transverse storage area rearward of deckgun channel with aluminum Zolatone lift-up door with push button latches on officer side. | 2684 |
| 3130-0437 | Upper SM pump module with single stacked triple crosslays and diamond plate open back storage pan. Duunage pan to be 17.75" deep on driver side due to booster reel height. | 2640 |
| 3130-0438 | Speedlay module full width wtih stokes basket and backboard storage. Includes area for (3) speedlays: (1) 2.5" in lower speedlay and (2) 1.5" in upper speedlay lower storage compartments with push button latches. Upper area of module to hold (1) stokes basket and (2) backboards. Includes vertical hinged smooth plate door(s) with push button latches. | 4791 |
| 3130-0439 | Stainless steel 62" wide lower pump module. Includes side running boards with Bustin Tread. This size required for most CAFS units. | 5631 |
| 3130-0440 | Upper SM pump module with single stacked triple crosslay backboard storage and diamond plate storage pan. Rearward crosslays to be double stacked. Crosslays to be 28" deep. | 4444 |
| 3130-0441 | Upper TM pump module with double stacked double crosslays. Crosslays to hold 300' of 2.5" DJ hose. | 2154 |
| 3130-0442 | Upper SM pump module with single stacked triple crosslays and diamond plate storage pan. Rearward crosslay to hold 150' of 3" DJ hose. | 2190 |
| 3130-0443 | Pump module. Includes 51" wide pump panel opening and running boards. Includes area forward of pump panel opening for (2) speedlays (stacked) lower storage compartments with push button latches. Includes modifications for 4x4 and plumbing applications as required. | 9939 |
| 3130-0444 | Crosswalk module. Includes walkway storage compartments with push button latches running boards (1) dual lighted LED folding step each side and access handrails mounted on the pump module. Includes modifications for 4x4 and plumbing applications as required. | 1961 |
| 3130-0445 | Pump module. Includes 39" wide pump panel opening and running boards. Upper SM pump module with single stacked double crosslays and open back storage pan. | 7470 |

| Item No. | Description | |
|---|---|---|
| 3130-0449 | Top mount eMAX pump module. Includes area for a double speedlay TM walkway (raised) with compartments dia plt running boards folding steps with integral lights and (2) vertical handrails. | 5973 |
| 3130-0450 | Pump module top mount with speedlays. Includes 45" wide pump panel opening dunnage pan and running boards. Top mount walkway includes storage compartments with push button latches (1) 5" diamond plate top mount walkway step with gator grip each side and access handrails mounted on the pump module. Includes area for (3) speedlays - (2) with 1.5" plumbing and (1) with 2.5" plumbing. The front area of the speedlays to have a removable diamond plate panel with D-ring latches. | 12152 |
| 3130-0451 | Pump module. Includes 57" wide pump panel opening and running boards. Upper SM pump module with single stacked triple crosslays backboard storage and diamond plate storage pan. Crosslays to be 65" high from ground. | 10396 |
| 3130-0452 | Speedlay module. Includes area for (2) speedlays with dividers (1) area for backboard storage with hinged doors with latches lower storage compartments with D-ring latches and running boards. Speedlays to hold 250' of 1.75 each. | 3783 |
| 3130-0453 | Crosswalk module. Includes walkway storage compartments with D-ring latches running boards (1) dual lighted LED folding step each side and access handrails mounted on the pump module. | 1584 |
| 3130-0454 | Upper SM pump module with double stacked double crosslays and diamond plate storage pan. Crosslay divider to be adjustable side to side. | 2016 |
| 3130-0455 | Pump module. Includes 51" wide pump panel opening and running boards. (Tradition style pump module see body layout). Includes area forward of pump panel opening for (2) speedlays (stacked) lower storage compartments with push button latches. | 9357 |
| 3130-0456 | Upper TM pump module with double stacked single crosslay and backboard storage. | 2916 |
| 3130-0457 | Upper SM pump module with single stacked double crosslay backboard storage and diamond plate open back storage pan. | 3125 |
| 3130-0458 | Upper stainless steel pump module with single stacked quad crosslays and top open storage with treadplate flooring. Crosslay floors lowered to approximately 72" above ground. | 3183 |
| 3130-0459 | Speedlay module to be mounted with backboard storage located forward. Two (2) latches shall be used to secure the doors. One (1) top and one (1) bottom. | 341 |
| 3130-0460 | Upper SM pump module with single stacked double crosslay backboard storage forward of crosslays and diamond plate open back storage pan. | 2769 |
| 3130-0462 | Upper TM pump module with single stacked quad crosslays and backboard storage. Crosslay preconnects to be offset to driver side of module. | 4055 |
| 3130-0464 | Upper SM stainless steel pump module with double stacked double crosslays for 1-1/2" DJ hose and top open storage with treadplate flooring. Width of each of the crosslay beds must be 6-1/2". | 1625 |
| 3130-0465 | Upper SM pump module with quad single stacked crosslays and diamond plate storage pan. The rear crosslay is for dry hose storage. The (3) forward crosslays to be 5.5" wide and the rearward crosslay to be 6" wide. | 2696 |
| 3130-0467 | Side Mount Pump Module. Includes area for double stacked double crosslay (notched dividers). Crosslay opening to be same as standard tradition triple crosslay design. | 1063 |
| 3130-0468 | Upper SM pump module with double stacked single crosslay and diamond plate storage pan. 400' of 1.75" DJ | 2038 |
| 3130-0469 | Upper SM pump module with quad single stacked crosslays and diamond plate storage pan. Rearward (2) crosslays to be 3" DJ dry lays. | 2451 |
| 3130-0470 | Pump module top mount with single stack double crosslay double speedlay (9" wide) and diamond plate storage pan. Includes 45" wide pump panel opening and running boards. Top mount walkway storage compartments with push button latches (1) 5" diamond plate top mount walkway step with gator grip each side and access handrails mounted on the pump module. Deck gun to be located in channel centered in storage pan running front to back. Embossed diamond plate covers with D-ring latches (wired to door ajar switch) each side of deck gun channel covers to be reinforced and hinged to front. | 13112 |
| 3130-0472 | Upper SM pump module with single stacked triple crosslay backboard storage and diamond plate storage pan. Rearward crosslay to be for 2.5" dry lay. Stoage pan to be open back style due to generator. | 4444 |
| 3130-0473 | Vertical speedlay module welded integral to front of pump enclosure. Includes 12" wide area for (2) speedlays. | 2415 |
| 3130-0474 | Top mount eMAX pump module. Includes area for a double speedlay TM walkway (raised) with compartments dia plt running boards fixed walkway steps and (2) vertical handrails. | 5973 |
| 3130-0475 | Upper TM pump module with triple stacked double crosslays. | 1813 |
| 3130-0476 | Top mount SS eMAX pump module. Includes area for double speedlays TM walkway with compartments treadplate running boards with Bustin Tread inserts and (2) vertical hand rails. | 6746 |
| 3130-0477 | Triple Speedlays with Enclosed Pump Panel Full Width Module. Includes 45" wide pump panel opening. Includes area for (3) speedlays and lower storage compartments with push button latches forward of pump panel opening. Backboard/stokes basket storage above the speedlays. Upper module area above the pump panel to have storage pan. | 20348 |

| Item No. | Description | |
|---|---|---|
| 3130-0480 | Upper SM pump module with single stacked double crosslay New York Hook storage with horizontal divider 8" off floor and diamond plate open back storage pan. | 3125 |
| 3130-0481 | Pump module. Includes 51" wide pump panel opening and running boards. Upper SM pump module with single stacked triple crosslays backboard storage and diamond plate storage pan. Crosslays to be 72" high from ground. | 9311 |
| 3130-0483 | Transverse Module (narrow). Locate forward of pump area. Includes a single compartment opening per side (with a shallow lower area and a transverse upper area with diamond plate flooring) and running boards. Upper area for triple crosslay forward (2) crosslays to be single stacked for 200' of 1.75 DJ hose per lay and rearward crosslay to be single stacked for 150-200' of 2.50" DJ hose. | 5093 |
| 3130-0484 | Upper SM pump module with backboard storage and diamond plate storage pan. Backboard storage to be located forward of storage pan. Deck gun piping to be located forward center area of pan and just rearward of back board compartment. | 2664 |
| 3130-0486 | Upper TM pump module with smooth plate storage pan. Side panels to be Zolatone gray. Storage pan to be painted black durabak. | 2359 |
| 3130-0487 | Pump module. Includes 57" wide pump panel opening and running boards. Running boards to be painted black durabak. | 5885 |
| 3130-0488 | Painted crosswalk area to includes all smooth plate and extrusion surfaces exposed to exterior in the crosswalk area (speedlay and pump module) to be painted job color. Does not include top facing exposed surfaces. | 2739 |
| 3130-0489 | Crosswalk module. Includes walkway storage compartments with push button latches running boards (1) dual lighted LED folding step each side and access handrails mounted on the pump module. Compartment doors to be painted job color. Crosswalk and running boards to be painted durabak black. | 2121 |
| 3130-0491 | Upper SM stainless steel pump module with single stacked triple crosslays and top open storage with treadplate flooring. Capacities of 300' 200' and 200' of hose for selected discharges. | 2274 |
| 3130-0492 | Pump module. Includes 45" wide pump panel opening and running boards. Upper SM pump module with single stacked double crosslays with diamond plate storage pan. Crosslays to be 72" high from ground. | 7491 |
| 3130-0493 | Speedlay module full width with stokes basket and backboard storage. Includes area for (2) speedlays: (2) 1.5" side by side speedlay storage compartments. Upper area of module shall have (2) adjustable dividers to hold (1) stokes basket and (2) backboards. Includes vertically hinged smooth plate door(s) with push button latches. | 4791 |
| 3130-0494 | Upper TM pump module with a transverse storage compartment with aluminum tread plate vertical hinged doors (1) each end of the compartment and a embossed tread plate top. | 2306 |
| 3130-0495 | Enclosed Pump Module with Double Speedlays. Includes 47.5" wide pump panel opening. Includes area for (2) stacked speedlays lower storage compartments with push button latches forward of pump panel opening. Upper module area to have storage pan. | 19971 |
| 3130-0496 | Upper SM pump module. Crosslay area to be: (2) compts 4.5" at base (1) compt 4.75" at base and (1) compt 7.5" at base. Ensure that each crosslay is wide enough to accommodate the nozzles so they are easily deployed for each side. Backboard storage and diamond plate storage pan. Crosslays to be 28" deep. | 4828 |
| 3130-0497 | Upper TM pump module with modified sides for improved visibility and diamond plate storage pan. | 2478 |
| 3130-0499 | Upper stainless steel pump module with single stacked quad crosslays and top open storage with treadplate flooring. Crosslay floors located approximately 75" above ground. Top mount pump module only. | 3183 |
| 3130-0500 | Upper SM pump module with forward (2) crosslays to be single stack and rearward crosslay to be double stack includes diamond plate storage pan. | 4566 |
| 3130-0501 | Upper SM pump module with single stacked quad crosslays and diamond plate storage pan. Crosslays to be 28" deep due to additional capacity. | 2931 |
| 3130-0503 | Crosswalk module. Includes running boards (1) intermediate style step each side and access handrails mounted on the pump module. Crosswalk intermediate steps and running boards to be 3/16" aluminum treadplate plate. | 1402 |
| 3130-0504 | Speedlay module. Includes area for (2) speedlays 15" front to rear with center divider curt to a height of 24" lower storage compartments with push button latches and running boards. | 2539 |
| 3130-0505 | Pump module top mount with speedlays. Includes 45" wide pump panel opening dunnage pan and running boards. Top mount walkway includes storage compartments with push button latches (1) 10" diamond plate top mount walkway step with gator grip each side and access handrails mounted on the pump module. Includes area for (3) speedlays - (2) with 1.5" plumbing and (1) with 2.5" plumbing. The front area of the speedlays to have a removable diamond plate panel with D-ring latches. | 12727 |
| 3130-0506 | Pump module. Includes 63" wide pump panel opening and running boards. Upper SM pump module with double stacked double crosslays with diamond plate storage pan. The hose to be in three (3) poly trays of 200' each. The module to be stepped up rearward of the crosslays. | 7491 |

| Item No. | Description | |
|---|---|---|
| 3130-0507 | Crosswalk module. Includes walkway storage compartments with push button latches running boards (1) dual lighted LED folding step each side and access handrails mounted on the pump module. The crosswalk shall be raised to accommodate storage of (2) backboards. | 1758 |
| 3130-0510 | Pump module top mount with speedlays. Includes 51" wide pump panel opening and running boards. Includes area forward of pump panel opening for (2) speedlays (stacked). Includes crosswalk module and walkway storage compartments with push button latches (1) dual lighted LED folding step each side and access handrails mounted on the pump module. | 11760 |
| 3130-0511 | Pump module. Includes 39" wide pump panel opening with integral double speedlays and running boards. Upper SM pump module with double stacked single crosslay and diamond plate storage pan. | 11956 |
| 3130-0512 | Enclosed triple vertically stacked speedlays with trays 14" wide capacities to be for the selected size preconnect discharges. Speedlay assembly welded integral to the front of SS pump enclosure. For use with enclosed side pump panels with special WB dimension added to create space for door openings. (Actual WB dimension for this application is 22".) | 2654 |
| 3130-0513 | Transverse full width module (24" wide) with full height doors. Located behind cab and stands alone. Includes a single compartment opening per side (with approximately 27" deep lower area and a transverse upper area). | 4499 |
| 3130-0514 | Upper SM pump module with single stacked triple crosslays and transverse storage area rearward of deckgun channel with stainless steel lift-up doors with push button latches. (1) On driver and (1) on officer side. | 3073 |
| 3130-0515 | Pump module top mount with speedlays. Includes 45" wide pump panel opening dunnage pan and running boards. The crosswalk shall be raised 3". The area directly below the crosswalk walkway shall include five (5) compartments one (1) each side for storage in the lower area and a horizontal storage directly under the walkway surface with three (3) compartments. | 12899 |
| 3130-0516 | Pump module - one piece. Includes 49.5" wide pump panel opening includes smooth plate aluminum painted black Durabak with gator grip for running boards. | 5511 |
| 3130-0517 | Double stacked 15"D triple crosslays and aluminum smooth plate storage pan painted black durabak. (2) 7.5" wide each to hold 250'-1.75"DJ & (1) 10.5" wide to hold 200'-2.5"DJ. | 2598 |
| 3130-0518 | Crosswalk module. Includes walkway storage compartments with D-ring latches running boards (1) dual lighted LED folding step each side and access handrails mounted on the pump module. | 1584 |
| 3130-0519 | Pump module for top mount enclosed operation. Includes 45" panel opening and area for single stacked double crosslay and deck gun channel. Module has sanded finish and crosslay floors are slotted for draining. | 10660 |
| 3130-0520 | Upper SM pump module with double stacked double crosslays and transverse storage area. Transverse storage area to be rearward crosslays. Includes horizontally hinged diamond plate doors with thumb latches doors to be hinged at top. Each crosslay to accommodate (1) removable poly tray (removable tray(s) sold separately). | 3571 |
| 3130-0522 | Upper SM pump module with double stacked triple crosslay deck gun channel and backboard storage. The rear crosslay is for dry hose storage. | 2857 |
| 3130-0523 | Side mount pump module. Extruded aluminum with runningboards. | 5511 |
| 3130-0524 | Top mount pump module with 20" walkway. Extruded aluminum with runningboards and formed side access steps. | 6568 |
| 3130-0525 | Top mount pump module with walkway and integral double speedlays (9" W). Extruded aluminum with runningboards. Includes formed walkway access steps. | 8139 |
| 3130-0526 | Top mount pump module with walkway and integral triple speedlays (13" W). Extruded aluminum with runningboards. Includes formed walkway access steps. Each 1.5" speedlay will have capacity for up to 200 ft. of 1-3/4" hose. The 2.5" speedlay (if selected) will have capacity for 150 ft. of 2.5" hose. | 8647 |
| 3130-0527 | Upper SM pump module with 8" channel forward for turret 2.5" single stacked single crosslay and diamond plate storage pan. | 2319 |
| 3130-0528 | Upper SM pump module with single stacked triple crosslays and diamond plate storage pan. Crosslay 3 to be a dead lay. | 2038 |
| 3130-0529 | Enclosed Pump Module with Double Speedlays. Includes 40.5" wide pump panel opening. Includes area for (2) stacked speedlays lower storage compartments with D-handle latches forward of pump panel opening. Upper module area to have storage pan. | 19971 |
| 3130-0530 | A side mount pump module with triple crosslays. The module shall have overall dimensions of 70"H x 72"W (not including runningboards) x 49"L (front to rear). | 8057 |
| 3130-0542 | Speedlay module. Includes area for (2) speedlays with divider forward (1) area for four (4) pike pole storage tubes to accommodate 6' pike poles in rearward lower area of module staggered two tubes on forward compartment wall and two tubes on rearward compartment wall. Upper area of rearward storage area over the pike poles there shall be a shovel storage compartment in remaining space which is open to the top of module when lid on top is opened. There shall be a bolt in divider between the pike pole storage and the upper shovel area. There shall be a hinged door on officer side only of rearward upper pike and shovel storage area with 2 push button latches lower storage compartments with push button latches and running boards. All storage doors shall be wired to door ajar circuit in accordance with NFPA. | 3998 |

| Item No. | Description | |
|---|---|---|
| 3130-0543 | Upper SM pump module with 2.5" double stacked single crosslay and diamond plate storage pan. 250' of 2.50" DJ | 2038 |
| 3130-0544 | Triple vertically stacked speedlays for top console 12" wide (no trays) capacities to be for the selected size preconnect discharges. Speedlay assembly welded integral to the front of SS pump enclosure. Bustin Tread in side running boards of speedlay area. | 2537 |
| 3130-0545 | Upper SM pump module with single stacked triple crosslay backboard storage and diamond plate storage pan. | 3298 |
| 3130-0546 | Crosswalk module. Includes stainless steel walkway storage compartments with lift-up access lids and butterfly latches non-skid running boards with Bustin Tread and access hand rails mounted one each side to the front of the pump enclosure assembly. | 2686 |
| 3130-0547 | Stainless steel 50" wide lower pump module. Includes side running boards with Bustin Tread inserts. | 5226 |
| 3130-0548 | Upper SM stainless steel pump module with (2) triple stacked crosslays and top open storage with treadplate flooring. | 1699 |
| 3130-0549 | Upper SM stainless steel pump module with (3) crosslays in both single and double stacks and top open storage with treadplate flooring. | 1973 |
| 3130-0550 | Upper TM stainless steel pump module with (2) triple stacked crosslays. | 1867 |
| 3130-0551 | Upper TM stainless steel pump module with (3) crosslays in both single and double stacks. | 2141 |
| 3130-0554 | Pump module. Includes 39" wide pump panel opening and running boards. Upper SM pump module with double stacked double crosslays and transverse storage area. Transverse storage area to be rearward crosslays. Includes horizontally hinged diamond plate doors with push button latches. Each crosslay to accommodate (1) removable poly tray (trays not included). | 9080 |
| 3130-0555 | Pump module. Includes 41" wide pump panel opening and running boards. Upper SM pump module with diamond plate storage pan and forward transverse compartment with double stacked double crosslays. Crosslays to be 12" wide and 15" deep. | 12791 |
| 3130-0556 | Upper TM stainless steel pump module with single stacked double crosslays and a transverse storage compartment with top open storage (if space available) with treadplate flooring. | 2916 |
| 3130-0557 | Stainless steel 70" wide lower pump module. Includes side running boards with Bustin Tread. This size is used for some big Industrial type foam systems. | 5511 |
| 3130-0558 | Upper SM pump module with double stacked triple crosslays. | 1714 |
| 3130-0560 | Pump module. Includes 45" wide pump panel opening and running boards. Includes area forward of pump panel opening for (2) stacked speedlays and (1) upper speedlay (crosslay style) lower storage compartments with push button latches. | 11815 |
| 3130-0561 | Upper TM pump module with single stacked single crosslay and backboard storage. | 4083 |
| 3130-0562 | Crosswalk module. Includes running boards. The crosswalk shall be raised 8". (1) Dual lighted LED folding step each side and access handrails mounted on the pump module. | 1266 |
| 3130-0563 | Top mount eMAX pump module for use with a (2) arm ladder rack. Includes area for a double speedlay TM walkway (raised) 21" front to rear without compartments dia plt running boards folding steps with integral lights and (2) vertical handrails. | 5973 |
| 3130-0565 | Upper SM pump module with triple crosslays and diamond plate storage pan. Forward (2) crosslays to be single stack and rearward crosslay to be double stack. | 2326 |
| 3130-0566 | Speedlay module. Includes area for (2) speedlays (1) area for backboard storage and Little Giant ladder with hinged doors with latches lower storage compartments with push button latches and running boards. | 3182 |
| 3130-0568 | Pump module. Includes 45" wide pump panel opening and running boards. Upper SM pump module with double stacked triple crosslays with diamond plate storage pan. | 7491 |
| 3130-0569 | Upper TM pump module with 2.5" single stacked single crosslay. | 1956 |
| 3130-0570 | eMAX Tanker Pump module. Includes enclosed pump panel compt on officer side (opposite pump panel) lower and upper storage areas center front pump access doors removable center floor in upper area storage pan. Lower storage area to hold (1) tray for 200' of 1.75" DJ preconnected hose and (1) tray for 200' of 2.5" DJ preconnected hose. Upper storage area to hold (1) tray for 200' of 1.75" DJ preconnected hose offset to rear and storage area for (2) backboards vertically stored offset forward w/sleeve each side of center pump access. | 9280 |
| 3130-0571 | Upper TM pump module with double stacked single crosslay and pike pole storage. | 2916 |
| 3130-0572 | Top mount pump module with 19" walkway. Extruded aluminum with runningboards. | 6568 |
| 3130-0573 | Transverse module (18" wide) with brushed stainless steel doors. Located forward of pump area and welded integral. Includes a single stainless steel compartment opening per side (with a shallow lower area and a transverse upper area) and side running boards with Bustin Tread. | 2596 |
| 3130-0574 | Transverse Module (narrow) 24.5. Locate forward of pump area. Includes a single compartment opening per side (with a shallow lower area and a transverse upper area with diamond plate flooring) and running boards. | 2566 |
| 3130-0575 | Transverse Module (full width). Locate forward of pump area. Includes a single compartment opening per side (with a shallow lower area and a transverse upper area with diamond plate flooring). Upper area for double stacked double crosslay. | 4368 |

| Item No. | Description | |
|---|---|---|
| 3130-0577 | Upper TM pump module with double crosslays. Forward crosslay to be double stacked and rearward crosslay to be dry lay for storage to include (2) pike pole tubes for 6' pike poles located on the rearward wall. | 2890 |
| 3130-0578 | Speedlay module. Includes a lower double preconnect storage area upper preconnect storage area sleeve in upper storage area for (2) backboards (vertically stored offset forward) lower storage compartments with push button latches and running boards. | 3693 |
| 3130-0579 | Pump module. Includes 51" wide pump panel opening and running boards. Upper SM pump module with (4) single stacked single crosslays with diamond plate storage pan. Crosslays to be 66" high from ground. | 7491 |
| 3130-0580 | Top mount eMAX pump module. Includes area for a double speedlay TM walkway (raised) with compartments with embossed diamond plate lift-up walkway lids (includes gas shock(s) as required to hold the lids open with butterfly style latch(es) for securing in the closed position). Comparments to be large as possible and include (1) light (match body compartmnets for brand and type of light) door ajar indicator wiring. Outboard sides of walkway to have diamond plate panels. Dia plt running boards Gator Grip fixed walkway steps and (2) vertical handrails. | 6892 |
| 3130-0581 | Upper SM pump module with double stacked double crosslay backboard storage and diamond plate storage pan. | 2936 |
| 3130-0586 | Pump module. Includes 45" wide pump panel opening and running boards. Upper SM pump module with 1.5" single stacked double crosslays 71" from ground 2.5" double stack single dry crosslay stepped up 7" from double crosslay and diamond plate storage pan. | 9563 |
| 3130-0587 | Pump module. Includes 45" wide pump panel opening and running boards. Upper SM pump module with single stacked double crosslays backboard storage and open back storage pan. Crosslays and backboard storage to be stepped down 8". | 8279 |
| 3130-0588 | Pump module. Includes 45" wide pump panel opening and running boards. Upper SM pump module with single stacked double crosslays backboard storage and open back storage pan. | 8279 |
| 3130-0589 | Transverse Module (full width). Locate forward of pump area. Includes a single compartment opening per side (with a shallow lower area and a transverse upper area with smooth plate flooring). | 3361 |
| 3130-0590 | Transverse module to hold: Four (4) shoreboards 48" x 92" on edge. | 1399 |
| 3130-0591 | Transverse Module (narrow). Locate forward of pump area. Includes Upper and Lower compartment openings each side of module a 3" extrusion located between upper and lower openings. The separate lower "tool style" compartment on each side of module shall be shallow with diamond plate flooring and include a diamond plate door with D-ring door latch. The upper transverse storage area shall include a diamond plate floor that shall extend out to the 3" extrusion which separates the upper and lower compartment openings. | 5195 |
| 3130-0592 | Speedlay module. Includes area for triple speedlays with divider(s) and lower storage compartments with push button latches and running boards. The side facing tool compartment doors along with the front and rear facing panels are to be smooth plate and painted gray Zolatone. Running boards to include gator grip and be painted black Durabak. | 3597 |
| 3130-0593 | Upper TM pump module with smooth plate side panels painted job color and smooth plate storage pan painted black Durabak. | 2264 |
| 3130-0594 | Pump module. Includes 45" wide pump panel opening and running boards. The front access door and the front panels to be smooth plate and painted gray Zolatone. Running boards to include gator grip and be painted black duraback. Used on TM module only. | 6890 |
| 3130-0595 | Upper SM pump module with double stacked quad crosslays and no storage pan. Crosslays to be 23" deep. For use on narrow 39" module only with applications approval that no pump panel will be utilized on upper module. | 2903 |
| 3130-0597 | Transverse Module (narrow). Locate forward of pump area. Includes a single compartment opening per side (with a shallow lower area and a transverse upper area with diamond plate flooring) and running boards. Upper area for triple crosslay forward (2) crosslays to be single stacked for 200' of 2.00" DJ hose per lay and rearward crosslay to be single stacked for 150' of 2.50" DJ hose. | 5093 |
| 3130-0598 | Pump module. Includes 51" wide pump panel opening and running boards. Upper SM pump module with single stacked double crosslays backboard storage and diamond plate storage pan. Crosslays to be @ 72" high from ground. | 8898 |
| 3130-0599 | Crosswalk module. Includes walkway storage compartments with push button latches running boards (1) dual lighted LED folding step each side and access handrails mounted on the pump module. Diamond plate walkway plate to be 21" wide due to 2-door Freightliner DEF tank. | 1584 |
| 3130-0601 | Pump module. Includes 51" wide pump panel opening and running boards. Upper SM pump module with double stacked triple crosslays with diamond plate storage pan. Crosslays to be 70" high from ground. Front headboard of module to be lowered 10" and provisions added to mount crosslay cover forward of deck gun channel. | 7829 |
| 3130-0602 | Dunnage pan notch. Located in the pump module. Pan to have a notch on the rear wall for the ladders to extend into. | 296 |
| 3130-0604 | Upper SM pump module with double stacked double crosslay backboard storage and diamond plate storage pan. | 2907 |

| Item No. | Description | |
|---|---|---|
| 3130-0605 | Pump module. Includes 51" wide pump panel opening and running boards. Upper SM pump module with double stacked triple crosslays single stack depth for extra capacity with diamond plate storage pan. Crosslays to be 70" high from ground. | 8153 |
| 3130-0606 | Upper SM stainless steel pump module with double stacked double crosslays for 1-1/2" DJ hose and top open storage with treadplate flooring. Width of each of the crosslay beds must be 6-1/2". Crosslay height to be aprox. 65" from ground. | 1906 |
| 3130-0607 | Upper SM pump module with single stacked triple crosslays and enclosed storage compartment with vertical hinged (rearward) diamond plate access door (1) each side and a bolt-on diamond plate top. Inside compartment will be a vertical partition centered in the opening and a full width adjustable shelf forward of the patition. | 4410 |
| 3130-0608 | Top mount eMAX pump module for use with a (2) arm ladder rack. Includes area for a raised double speedlay TM walkway (raised) 21" front to rear diamond plate access doors without compartments dia plt running boards folding steps with integral lights and (2) vertical handrails. For use with 4X4 application. | 5973 |
| 3130-0609 | Pump module top mount with speedlays. Includes 45" wide pump panel opening dunnage pan and running boards. The crosswalk shall be raised 3". The area directly below the crosswalk walkway shall include three (3) compartments one (1) each side for storage in the lower area and a horizontal transverse backboard storage directly under the walkway surface with an access door on both sides of the module. (1) 14" diamond plate top mount walkway step with gator grip each side and access handrails mounted on the pump module. Includes area for two (2) speedlays with 1.5" plumbing one (1) discharge swivel to either side of the body. The front area of the speedlays to have a removable diamond plate panel with D-ring latches. | 12501 |
| 3130-0610 | Heat shield. Locate below diamond plate walkway top. | 149 |
| 3130-0612 | Upper SM pump module with storage for (2) New York Hook pike poles and diamond plate storage pan. | 2769 |
| 3130-0613 | Pump module. Includes 57" wide pump panel opening and running boards. Upper SM pump module with double stacked double crosslays backboard storage and diamond plate storage pan. Crosslays to be no higher than 68" from ground. | 7904 |
| 3130-0614 | Pump module top mount with 39" wide pump panel opening triple sgl stack crosslays rear of TM panel and integral walkway with compartments. Includes dia plt running boards. | 9245 |
| 3130-0615 | Upper SM stainless steel pump module with double stacked quad crosslays with top open storage with treadplate flooring. | 2178 |
| 3130-0616 | Pump module top mount with speedlays. Includes 45" wide pump panel opening and running boards. Includes area forward of pump panel opening for (2) speedlays (stacked). Includes crosswalk module and walkway storage compartments with push button latches (1) dual lighted LED folding step each side and access handrails mounted on the pump module. | 11036 |
| 3130-0617 | Upper SM pump module with single stacked triple crosslays and rear of the crosslays a Double Stacked Dry Lay. | 4370 |
| 3130-0618 | Crosswalk module. Includes walkway storage compartments with push button latches running boards (1) dual lighted LED folding step each side and access handrails mounted on the pump module. The crosswalk shall be raised to accommodate storage of (1) backboard. | 1758 |
| 3130-0619 | Pump module. Includes 51" wide pump panel opening integral walkway and running boards. Includes area forward of pump panel opening for (2) speedlays (stacked) lower storage compartments with push button latches (1) dual lighted LED folding step each side and access handrails mounted on the pump module. | 11500 |
| 3130-0620 | One (1) diamond plate gator grip step each side of TM walkway in place of the standard folding step. | 247 |
| 3130-0623 | Pump module. Includes 39" wide pump panel opening with integral double speedlays and running boards. Upper SM pump module with diamond plate storage pan. | 11956 |
| 3130-0624 | Top Mount Enclosed Pump Module. Includes 39" panel opening and area directly below the top mount controls for a double stacked double speedlay with removable aluminum trays stacked side by side lower storage compartments with push button latches and running boards. The upper module will include a storage pan. | 11881 |
| 3130-0626 | Pump module top mount with better visability and with speedlays. Includes 45" wide pump panel opening dunnage pan and running boards. Top mount walkway includes storage compartments with push button latches (1) dual lighted LED folding step each side and access handrails mounted on the pump module. Includes area for (3) speedlays - (2) with 1.5" plumbing and (1) with 2.5" plumbing. | 12490 |
| 3130-0627 | Pump module. Includes 51" wide pump panel opening and running boards. Upper SM pump module with double stacked double crosslays with diamond plate storage pan. Crosslays to be 66" high from ground. | 7451 |
| 3130-0628 | Pump module top mount with better visability and with speedlays. Includes 45" wide pump panel opening dunnage pan and running boards. Top mount walkway includes storage compartments with push button latches (1) dual lighted LED folding step each side and access handrails mounted on the pump module. Includes area for (3) speedlays - (2) with 1.5" plumbing and (1) with 2.5" plumbing. Each speedlay to have a 200' capacity of hose. | 12490 |

| Item No. | Description | |
|---|---|---|
| 3130-0629 | Upper SM pump module with single stacked double crosslay cribbage storage and diamond plate storage pan. Cribbage storage to be a minimum 4" clear opening (including latch). | 3050 |
| 3130-0630 | Upper SM pump module with double stacked triple crosslays (single stacked depth) and rear of the crosslays a single stacked Dry Lay. | 4370 |
| 3130-0632 | Upper SM pump module with diamond plate storage pan and storage compartment. Storage compartment located forward of storage pan. Includes (1) full height adjustable divider and vertically hinged stainless steel door each side and push button latches. | 5263 |
| 3130-0633 | Upper stainless steel pump module with single stacked triple crosslays and top open storage with treadplate flooring. Crosslay floors lowered to approximately 66" above ground. Crosslay plumbing terminates at side panels below beds. | 3183 |
| 3130-0637 | Double vertically stacked speedlays for use with removable trays 9.5" wide capacities to be for the selected size preconnect discharges. Includes (1) crosslay at top above speedlays. Module assembly welded integral to the front of SS pump enclosure. Actual module width 13". | 3194 |
| 3130-0639 | Pump module one piece. Includes 39in. wide pump panel opening and running boards. Upper SM pump module with single stacked double cross lays and a transverse storage located rearward of cross lays equipped with boxed out lift up tread lids on both sides to accommodate storage of up to a 86in. length stokes basket and a nested back board. Boxed out doors to have D-ring latches Stainless steel staked hinges and hold open device(s) and be designed to lift up high enough to easily deploy equipment from below. Door to be tied to door ajar circuit in cab. Upper module to be raised to also accommodate a dunnage pan. | 9148 |
| 3130-0640 | Enclosed Pump Module with Double Speedlays. Includes 40.5" wide pump panel opening. Includes area for (2) stacked speedlays lower storage compartments with D-handle latches forward of pump panel opening. Upper module area to have storage pan. | 19971 |
| 3130-0641 | Top mount pump module with 20" walkway and running boards. Includes area forward of pump panel opening for (2) speedlays (stacked) lower storage compartments with push button latches. | 9358 |
| 3130-0643 | Interior of Backboard Storage compartment shall include gray zoloatone on floor sides and top of storage enclosure. Floor of compartment to include a composite material overlay. | 778 |
| 3130-0644 | Full Width Speedlay module. Includes a lower double preconnect storage area upper preconnect storage area full width storage pan and lower storage compartments with push button latches. | 4196 |
| 3130-0645 | LINE-X package for side mount pump module: Includes exterior surfaces of all running boards (including speedlay running boards if applicable) integral running board platforms (underbody style not included) exterior surface of runningboard trays and lids intermediate steps and all fabricated mounting plates installed under the module or body for plumbing options like drains bleeders etc. as applicable. | 503 |
| 3130-0646 | LINE-X package for top mount pump module: Includes exterior surfaces of all running boards (including speedlay running boards if applicable) exterior surface of runningboard trays and lids intermediate steps and all fabricated mounting plates installed under the module or body for plumbing options like drains bleeders stirrup style switch etc. as applicable. Also includes walkway and walkway steps. | 954 |
| 3130-0647 | Top mount eMAX pump module. Includes area for a single 2.5" speedlay with 200' capacity TM walkway (raised) with compartments dia plt running boards folding steps with integral lights and (2) vertical handrails. | 5973 |
| 3130-0648 | Top mount pump module with walkway and integral double speedlays (11" W). Extruded aluminum with runningboards. Includes formed walkway access steps. | 8139 |
| 3130-0649 | LINE-X for embossed diamond plate panel to be located above speedlays forward of top mount pump panel area. | 282 |
| 3130-0650 | Raised crosswalk module. Includes 8" raise with 5" high storage compartment with drop down diamond plate doors with push button latches. | 1482 |
| 3130-0651 | Top mount pump module with walkway and integral double speedlays (11" W). Extruded aluminum with runningboards. Includes formed walkway access steps. | 8139 |
| 3130-0654 | Upper SM stainless steel pump module without crosslays. Side access open storage only with treadplate flooring. Includes (1) full width lift up door drivers side and (1) vertically hinged backboard door officer side. | 3064 |
| 3130-0655 | Raised walk surface on optioned module with integrated cross walk module. Includes additional structure for 8 in. raise with 5 in. high transverse storage compartment with drop down diamond plate doors with push button latches. Compartment to be sleeved to allow for un-specified dry storage. | 1482 |
| 3130-0657 | Pump module. Includes 39" wide pump panel opening and running boards. Includes area forward of pump panel opening for (2) stacked speedlays and (1) upper speedlay (crosslay style) lower storage compartments with push button latches. | 11815 |
| 3130-0659 | Pump module. Includes 45" wide pump panel opening with integral double speedlays and running boards. Upper SM pump module with double stacked single crosslay tool compartment each side below speedlay and diamond plate storage pan. | 11956 |
| 3130-0662 | Transverse Module (narrow). Locate forward of pump area. Includes a single compartment opening per side (with a shallow lower area and a transverse upper area with diamond plate flooring) and running boards. Upper area for double stacked triple crosslay. Crosslay 3 to be a dead lay. | 5328 |

| Item No. | Description | |
|---|---|---|
| 3130-0664 | Upper SM stainless steel pump module with (3) crosslays in double stacks and top open storage with treadplate flooring. | 1973 |
| 3130-0665 | Upper TM stainless steel pump module with (3) crosslays in double stacks. | 2141 |
| 3130-0668 | Stainless steel 62" wide lower pump module. Includes side running boards with Bustin Tread. This size required for most CAFS units. | 5511 |
| 3130-0669 | Top mount pump module with 20" walkway 12" W tool compartment opening and integral double speedlays (9" W). Extruded aluminum with runningboards. Includes full width formed walkway access steps. | 8139 |
| 3130-0670 | Upper SM pump module with single stacked triple crosslay area (4.25/4.25/6") and diamond plate storage pan. Rearward crosslay is to be a dry lay to hold 150' of 3" DJ (1" wider than standard). Forward crosslay areas are for up to 200' of 2" DJ each. | 2304 |
| 3130-0672 | Pump module for side mount enclosed operation. Includes 52.5" panel opening and area for double stacked triple crosslay. Module has sanded finish and crosslay floors are slotted for draining. Pump module to be full width. | 13349 |
| 3130-0673 | Upper SM stainless steel pump module with single stacked double crosslays and double stacked dead lay for LDH hose. Top open storage with treadplate flooring. | 2038 |
| 3130-0675 | Upper stainless steel pump module with single stacked double crosslays and top open storage with treadplate flooring. Crosslay floors lowered to approximately 66" above ground. Crosslay plumbing terminates at side panels below beds. Crosslay 1 and crosslay 2 on the officer side. | 3183 |
| 3130-0676 | Door at officer side upper pump panel for dunnage compartment access Locate directly rearward of the crosslay beds with forward hinged vertical access door 17.5" wide x 31" tall and push button trigger latch. | 280 |
| 3130-0678 | Top mount pump module with 20in. walkway. Extruded aluminum with running boards and LED lighted folding side access steps. | 6568 |
| 3130-0679 | Side mount panel for lever controls IPO push pull handles. | 1610 |
| 3130-0680 | Durabak package for side mount pump module: Includes exterior surfaces of all running boards (including speedlay running boards if applicable) exterior surface of runningboard trays and lids intermediate steps and all fabricated mounting plates installed under the module or body for plumbing options like drains bleeders stirrup style switch etc. as applicable. | 503 |
| 3130-0681 | Durabak package for top mount pump module: Includes exterior surfaces of all running boards (including speedlay running boards if applicable) exterior surface of runningboard trays and lids intermediate steps and all fabricated mounting plates installed under the module or body for plumbing options like drains bleeders stirrup style switch etc. as applicable. Also includes walkway and walkway steps. | 954 |
| 3130-0682 | Upper SM stainless steel pump module with double stacked double crosslays and top open storage with treadplate flooring. Each bed to hold up to 200' of double jacket hose for the selected discharges. | 1625 |
| 3130-0684 | Top mount pump module with walkway and integral double speedlays (9" W). Extruded aluminum with runningboards. Includes formed walkway access steps. | 8139 |
| 3130-0688 | Stainless steel 65" wide lower pump module. Includes side running boards with Bustin Tread. This size required for most CAFS units. | 5511 |
| 3130-0689 | Top mount pump module with walkway and integral double speedlays (11" W). Extruded aluminum with runningboards. Includes formed walkway access steps. | 8139 |
| 3130-0691 | Upper stainless steel pump module with double stacked triple crosslays and top open storage with treadplate flooring. Crosslay floors lowered to approximately 71" above ground. | 3183 |
| 3130-0692 | Pump module modification for lowered crosslays accessed from the ground. Front headboard of module to be lowered and provisions added to mount crosslay cover forward of deck gun channel. See body layout. | 452 |
| 3130-0693 | Upper SM stainless steel pump module with double stacked double crosslays and a backboard plus top open storage with treadplate flooring. Crosslay capacity of 300' of 1.75" hose per bed. | 2769 |
| 3130-0694 | Upper stainless steel pump module with single stacked triple crosslays and top open storage with treadplate flooring. Crosslay floors lowered to approximately 64" above ground. | 3183 |
| 3130-0696 | Upper SM pump module with single stacked triple crosslay and diamond plate storage pan. Forward (2) crosslay to be 6" wide and the rearward crosslay to be 6.75" wide. | 4993 |
| 3130-0697 | Enclosed Side Mount Pump Module with 17" wide integral preconnect area located forward of pump panel. Includes tool compartment each side below the forward preconnect area and running boards. | 15996 |
| 3130-0700 | Upper SM stainless steel pump module with double stacked double crosslays and a backboard plus top open storage with treadplate flooring. Crosslay capacity of 300' of 1.75" hose per bed. Crosslay floors lowered to approximately 71" above ground. | 3201 |
| 3130-0701 | Side Mount Pump Module with 11" wide integral preconnect storage area located forward of pump panel. Includes tool compartment each side below the forward preconnect storage area and running boards. | 9640 |
| 3130-0702 | Top mount eMAX pump module. Includes area for a double speedlay TM walkway (raised) with compartments dia plt running boards folding steps with integral lights and (2) vertical handrails. The walkway shall be raised and stretched to accommodate storage of (2) backboards. | 6536 |

| Item No. | Description | |
|---|---|---|
| 3130-0703 | Upper SM stainless steel pump module without crosslays. Transverse storage compartment 20" wide x 24" high with mid-point shelf at front of the enclosure with ADT cover. (1) door actuated light at each door opening. (2) vertical rearward hinged box pan fully gasketed doors with d-ring latches and gas tube hold opens. Wire to door adjar indicator in cab. A full height vertical partition installed 2.5" from the rear wall to provide space for backboard storage. Shelf installed forward of partition at mid-height to permit storage of high rise pack on bottom and long handle tools on top. Top open storage rearward of the transverse compartment with treadplate flooring. Outer door panel finish to match side pump panel finish. | 3743 |
| 3130-0704 | Pump module. Includes 39" wide pump panel opening with integral double speedlays and running boards. Upper SM pump module with double stacked single crosslay tool compartment each side below speedlay and diamond plate storage pan. | 11956 |
| 3130-0705 | Pump module. Includes 63" wide pump panel opening and running boards. Upper SM pump module with double stacked triple crosslays extra capacity with diamond plate storage pan. Crosslays to be 68" high from ground. Front headboard of module to be lowered 15" and provisions added to mount crosslay cover. | 7979 |
| 3130-0706 | Upper SM pump module with double stacked double crosslays and diamond plate storage pan. Rear crosslay to be plumbed 2.5" with opening for 3" DJ hose. | 1898 |
| 3130-0709 | Pump panels to be recess mounted in the pump module by approximately 2" each side of body. | 560 |
| 3130-0713 | Pump module modification for lowered crosslays accessed from the ground. Front headboard of module to be lowered and provisions added to mount crosslay cover forward of deck gun channel. See body layout. | 452 |
| 3130-0714 | Removable boxed out upper speedlays. The rear area of the two (2) upper speedlays are to be boxed out with a removable back wall to reduce the width of the speedlays. Both upper speedlays are to have 7" of clear opening front to rear including forward speedlay roller. | 664 |
| 3130-0716 | Top mount eMAX pump module. Includes area for a double speedlay TM walkway (raised) without compartments (access doors ONLY for CAFS system) dia plt running boards folding steps with integral lights and (2) vertical handrails. | 5973 |
| 3130-0720 | Side Mount Pump Module with 13" wide integral preconnect area located forward of pump panel. Includes tool compartment each side below the forward preconnect area and running boards. | 9903 |
| 3130-0721 | Side Mount Pump Module with 15" wide integral preconnect area located forward of pump panel. Includes tool compartment each side below the forward preconnect area and running boards. | 10165 |
| 3130-0722 | Side Mount Pump Module with 9" wide integral preconnect area located forward of pump panel. Includes tool compartment each side below the forward preconnect area and running boards. | 9378 |
| 3130-0727 | Top Mount Enclosed Pump Module with 19" wide integral preconnect area located forward of pump panel. Includes tool compartment each side below the forward preconnect area and running boards. | 10690 |
| 3130-0728 | Top Mount Enclosed Pump Module. Extruded aluminum with runningboards. | 9378 |
| 3130-0730 | The side mount pump module shall be enclosed with roll up doors on both sides. Roll up doors added seperately. | 4590 |
| 3130-0731 | Enclosed triple vertically stacked speedlays 15" wide for use with trays (selected separately). Capacities to be 250' for the selected size preconnect discharges. Speedlay assembly welded integral to the front of SS pump enclosure. For use with enclosed side pump panels. Overall additional width adds 22" to the wheelbase. | 2654 |
| 3130-0732 | Enclosed Pump Module with Triple Speedlays vertical stacked. Includes 45" wide pump panel opening. Includes preconnect area for (3) 1.5" speedlays lower storage compartments forward of pump panel opening. Upper module area to have storage pan. | 18275 |
| 3130-0733 | The outboard panels of the pump module to be smooth plate seamless and painted job color. | 562 |
| 3130-0734 | Side Mount Pump Module with 17" wide integral preconnect area located forward of pump panel. Includes tool compartment each side below the forward preconnect area and running boards. | 10480 |
| 3130-0737 | Enclosed Pump Module with Triple Speedlays. Includes 51" wide pump panel opening. Includes a lower preconnect area for (1) 2.5" speedlay and a upper preconnect area for (2) 1.5" speedlays lower storage compartments with push button latches forward of pump panel opening. Upper module area to have storage pan. | 18275 |
| 3130-0738 | Pump module compartment approx. 20 inches deep located on the officer side. Includes provision for discharges or intakes on the back wall as applicable. Requires enclosed pump module special ordered water pump and engineering approval. | 754 |
| 3130-0739 | The pump module side panels shall be inset at standard width on both sides of the apparatus with running boards only below module panels. Forward hose storage areas and/or upper module shall be extended outward to full body width to allow for longer storage capacity and for upper module to have a full body width dunnage pan as applicable per configuration. Side forward body steps not usable with this option and slide out platforms may be needed to accommodate reach to options in dunnage pan as applicable. i.e. booster or cord reels or similar which will deploy off of module side. | 4590 |

| Item No. | Description | |
|---|---|---|
| 3130-0741 | Upper stainless steel pump module with double stacked double crosslays and top open storage with treadplate flooring. Crosslay floors lowered to approximately 66" above ground. | 1950 |
| 3130-0742 | Top mount pump module walkway runningboards and formed walkway access steps shall be made out of embossed diamond plate with no gator grip in place of standard. | 349 |
| 3130-0743 | Top mount pump module with 20" walk way. Extruded aluminum with running boards and full width formed side access steps. | 6568 |
| 3130-0744 | LINE-X pump module exterior: Includes exterior surfaces of all extrusions only. Specific areas like the areas for hinges doors handrails and pump panels shall not hav LINE-X finish to meet tight tolerence for better fit. | 2100 |
| 3134-0006 | The single gauge panel on the driver's side of the side mount module is to be hinged downward. Includes two (2) cable hold opens and latches. | 151 |
| 3134-0009 | The gauge panel(s) on the driver side of the Side Mount module to be hinged upward. Includes two (2) gas shock hold opens and latches. | 151 |
| 3134-0011 | Officer side pump panel to be vertical hinged on forward extrusion. Panel(s) to be secured in the closed position with push button latches. Upper panel to be held open with gas shock. | 554 |
| 3134-0013 | Driver and Officer side pump panels to be vertical hinged on forward extrusion. Panels to be (2) or (3) pieces depending on module height and secured in the closed position with push button latches. Upper panels to be held open with gas shock. | 1103 |
| 3134-0015 | Stainless steel TM control panel driver and officer side pump panels. | 1072 |
| 3134-0017 | The TM control panel driver and officer side pump panels are to be painted Zolatone black. | 904 |
| 3134-0018 | The TM control panel driver and officer side pump panels are to be painted Zolatone gray. | 904 |
| 3134-0019 | The driver and officer side pump panels are to be painted Zolatone black. | 704 |
| 3134-0020 | The driver and officer side pump panels are to be painted Zolatone gray. | 704 |
| 3134-0021 | Body mainframe and upper body/hosebed side assemblies for a 95" high body. | 1465 |
| 3134-0026 | Pump panel support angles. Locate up to (3) horizontal mounted as required on interior side of the main vertically hinged pump panel(s). | 171 |
| 3134-0027 | TM control panel to be Zolatone gray and driver and officer side panels to be stainless steel. | 636 |
| 3134-0028 | Pump panel layout and approval drawing to match existing and/or previous unit. To match as close as possible (Engineering and/or vendor requirements may alter final panel layout). | 467 |
| 3134-0036 | The TM control panel to be painted zolatone black and the driver and officer side pump panels are to be stainless steel. | 1175 |
| 3134-0037 | Driver side pump panel to be vertically hinged on forward extrusion. Panel to be (2) piece and lower panel to be secured in the closed position with push button latches. Upper panel to be stationary. Includes vertically hinged panel rearward of backboard storage to be secured in the closed position with push button latches. | 774 |
| 3134-0038 | Diagramatic Color coded overlay around control handles and discharges | 51 |
| 3134-0042 | Pump panels. Driver side upper pump access panel to be horizontally hinged with diamond plate door. Includes (2) push-button latches and (2) hold opens. Officer side pump panel to be vertically hinged on forward extrusion. Panel to be (2) or (3) pieces depending on module height and secured in the closed position with push button latches. Upper panel to be held open with gas shock. | 1103 |
| 3134-0043 | Rear Mount pump access door. Includes (2) push button latches and (2) hold open devices. Door to be [#LOC]. Door to open to 90 degrees and includes pull strap for access from ground. | 539 |
| 3134-0049 | The main rear pump panel to be vertically hinged along officer side. Includes push-button latches and cable mounted hold open. | 554 |
| 3134-0051 | Driver and Officer side upper pump access panels to be horizontally hinged with diamond plate doors. Includes (2) D-ring latches and (2) hold opens for each. | 654 |
| 3134-0052 | Driver side pump panel to be vertically hinged on forward extrusion. Panel to be (2) piece and lower panel to be secured in the closed position with push button latches. Upper panel to be stationary. | 774 |
| 3134-0053 | Officer side pump panel Escutchion Plate shall be attach with Thumb Latch. | 200 |
| 3134-0055 | Officer side upper pump access panel to be horizontal hinged with stainless steel door. Includes (2) push button latches and (2) hold open devices. | 235 |
| 3134-0056 | Driver side panel shall be attach with screw.Officer side pump panels to be vertically hinged on forward extrusion. Panels to be (2) or (3) pieces depending on module height and secured in the closed position with push button latches. Upper panels to be held open with gas shock. | 1103 |
| 3134-0063 | The rear mount gauge panel to be hinged upward. Includes (2) mechanical/pneumatic (as applicable to panel size) hold opens and latches. | 176 |
| 3134-0064 | The gauge panel(s) on the driver side of the Side Mount module to be hinged upward. Panel(s) to include (2) mechanical/pneumatic (as applicable to panel size) hold opens and latches. | 151 |
| 3134-0065 | Driver and Officer side pump panels. Upper panel to be bolt-on diamond plate panel. Lower pump panel to be vertically hinged on forward extrusion. Panel to be secured in the closed position with push button latches. | 1545 |
| 3134-0066 | Officer side upper pump access panel to be horizontally hinged with smooth plate door painted Zolatone black. Includes (2) push button latches and (2) hold open devices. | 704 |
| 3134-0067 | Driver side pump panel to be full width of pump module due to thru-bolted push/pull rod extrusion. | 154 |

| Item No. | Description | |
|---|---|---|
| 3134-0068 | Driver side panel shall be attach with screw and Escutchion Plate shall be vertically hinge forward.Officer side pump panels to be vertically hinged on forward extrusion. Panels to be (2) or (3) pieces depending on module height and secured in the closed position with push button latches. Upper panels to be held open with gas shock. | 1103 |
| 3134-0069 | The stainless steel single gauge panel on the driver side of the side mount pump module is to be hinged downward. Includes two (2) cable hold opens and latches. | 151 |
| 3134-0070 | The stainless steel double gauge panels on the driver side of the side mount pump module are to be hinged downward. Includes two (2) cable hold opens and latches per door. Required with 6" master gauges and/or overcrowded single lower gauge panels. | 303 |
| 3134-0072 | Driver and officer side mounted pump panels are to be brushed stainless steel. | 606 |
| 3134-0073 | Driver and officer side mount pump panels are to be stainless steel with black Zolatone finish. Includes black suction and discharge bezels. | 704 |
| 3134-0074 | The top mount control panel and the driver and officer side pump panels are to be brushed stainless steel. | 1072 |
| 3134-0075 | The top mount control panel and the driver and officer side pump panels are to be stainless steel with a black Zolatone finsh. | 904 |
| 3134-0078 | Special Driver and Officer side pump panels to be vertically hinged on forward extrusion. Panels to be (2) or (3) pieces depending on module height and secured in the closed position with push button latches. Upper panels to be held open with gas shock. | 1586 |
| 3134-0082 | Driver side pump panel Escutchion Plate shall be hinge forward. Include thumb Latches. | 299 |
| 3134-0083 | The main and lower pump panel to be inset in the rear body and to run full height just below the roll-up door drum. Panels to enclosed on the sides and bottom with bolt-in plates matching main panel material.. Panel materials to be [#LOC]. | 553 |
| 3134-0084 | Driver and Officer side upper pump access panels to be horizontally hinged with aluminum smooth plate doors painted job color. Includes (2) push-button latches and (2) hold opens for each. | 704 |
| 3134-0086 | The side pump intake / discharge panels to be painted Zolatone gray. eMAX only. | 348 |
| 3134-0087 | Pump operator control panel in driver side forward body compartment to be painted Zolatone gray. eMAX only. | 441 |
| 3134-0088 | The side pump intake / discharge panels to be painted Zolatone black. eMAX only. | 348 |
| 3134-0089 | Pump operator control panel in driver side forward body compartment to be painted Zolatone black. eMAX only. | 441 |
| 3134-0090 | Custom sized stainless steel gauge panel(s) on the driver side of the side mount pump panel are to be hinged downward. Includes two (2) cable hold opens and latches. | 2084 |
| 3134-0091 | Officer side upper pump access panel to be horizontally hinged with diamond plate door. Includes (2) push-button latches and (2) hold opens. Lower pump panel Escutchion plate to be vertically hinged forward. Panel to be secured in the closed position with push button latches. | 774 |
| 3134-0093 | Top mounted pump operator control panel to be painted Zolatone gray. eMAX only. | 363 |
| 3134-0094 | Top mounted pump operator control panel to be painted Zolatone black. eMAX only. | 363 |
| 3134-0095 | The upper gauge panel on the enclosed pump panel is to be hinged forward. Side mount eMAX only. | 151 |
| 3134-0103 | The pump operator's pump panel and rear main pump panels are to be painted Zolatone black. | 704 |
| 3134-0104 | Officer side upper pump access panel behind crosslays to be horizontally hinged with stainless steel door. Includes (2) push button latches and (2) hold open devices. | 235 |
| 3134-0106 | Officer side pump panel escutchion plate shall be around each discharge and pump intakes. | 197 |
| 3134-0107 | The TM control panel to be stainless steel. The driver and officer side pump panels are to be painted Zolatone black. | 904 |
| 3134-0108 | Booster reel rewind switch. Switch guarded half moon. Location on driver side upper pump display panel. | 33 |
| 3134-0112 | Side control pump enclosure structure and panels to be modified as necessary to provide the lowest practical crosslay floor height from the ground. | 1469 |
| 3134-0113 | Officer side upper pump access panel to be horizontally hinged with aluminum smooth plate door painted Zolatone black both sides. Includes (2) push button latches and (2) hold open devices. | 280 |
| 3134-0114 | Driver and officer side mount pump panels are to be stainless steel with gray Zolatone finish. | 704 |
| 3134-0117 | The main rear pump panel to be vertically hinged along officer side. Includes push-button latches and gas spring(s) mounted in place to hold open. | 651 |
| 3134-0118 | Rear Mount pump access doors (2) lift-up doors (1) each side. Includes (1) center slam strip reinforced (2) push button latches each side and (2) hold open devices each side. Doors to be [#LOC]. Doors to open to 90 degrees and includes pull strap for access from ground. | 539 |
| 3134-0121 | The side pump intake / discharge panels to be painted Zolatone black. SS eMAX only. | 424 |
| 3134-0122 | Pump operator control panel in driver side forward body compartment to be painted Zolatone black. SS eMAX only. | 538 |
| 3134-0123 | Top mounted pump operator control panel to be painted Zolatone black. SS eMAX only. | 443 |

| Item No. | Description | |
|---|---|---|
| 3134-0126 | The top mount control panel and the driver and officer side pump panels are to be stainless steel. The top panel shall be finished with black Zolatone. The side panels shall remain stainless steel finish. | 904 |
| 3134-0127 | Driver and officer side mount pump panels are to be stainless steel with black Zolatone finish. Includes brushed suction and discharge bezels (not coated). Includes T bar and trim. | 665 |
| 3134-0129 | Driver side mount pump panel to be stainless steel with black Zolatone finish. Includes black suction and discharge escutcheon plates. | 353 |
| 3134-0130 | Zoloatone escutcheon plate under each (4) foam control handles. Hole diameter shall be as tight as possible to handle shaft size. | 261 |
| 3134-0131 | Driver and Officer side upper pump access panels to be horizontally hinged with stainless steel doors. Includes (2) D-ring latches and (2) hold opens for each. | 755 |
| 3134-0133 | Driver and officer side upper pump access panels to be horizontal hinged with stainless steel doors. Includes (2) push-button latches and (2) hold opens for each. | 467 |
| 3134-0134 | Officer side upper pump access panel to be horizontally hinged door painted Zolatone to match lower panels. Includes (2) push button latches and (2) hold open devices. | 235 |
| 3134-0135 | Driver and officer side upper pump access panels to be horizontally hinged with smooth plate door painted Zolatone to match lower panels. Includes (2) push button latches and (2) hold opens for each. | 467 |
| 3134-0136 | The side upper module panels/ access smooth plate doors to be painted Zolatone black. eMAX only. | 348 |
| 3134-0137 | The upper gauge panel is to be hinged forward. Includes (2) push-button latches. | 147 |
| 3134-0139 | Hinge Pump Panel shall be reinforce with a stiffener mounted on each hinge panel. | 123 |
| 3134-0141 | Rear Mount pump access door. Includes (2) D-ring latches and (2) hold open devices. Door to be [#LOC]. Door to open to 90 degrees and includes pull strap for access from ground. D-ring latch to utilize a slot in extrusion or to latch behind extrusion to secure without angle latch catch. | 624 |
| 3134-0142 | Pump panel support angles. Locate up to (3) horizontal mounted as required on interior side of the main vertically hinged pump panel(s).(Bolt on support). | 170 |
| 3134-0147 | Driver and officer side mount pump panels are to be stainless steel with black Zolatone finish. | 666 |
| 3134-0150 | Pump operator control panel in driver side forward body compartment L1 to be stainless steel.480 | 541 |
| 3134-0151 | The pump operator's pump panel are to be painted Zolatone black. | 343 |
| 3134-0152 | The pump panels including gauge panels shall be coated with LINE-X. | 1431 |
| 3134-0156 | The stainless steel single gauge panel on the driver side of the side mount pump module is to be fixed mounted with stainless steel fasteners. For use with left side intermediate pump step option. | 105 |
| 3134-0157 | The upper gauge panel is to be hinged upward. Includes latching and hold-open device. | 198 |
| 3134-0158 | Exterior surfaces of the front rear and side of the pump module as well as the upper access doors and t-bar/trim will have a black LINE-X finish. | 2663 |
| 3134-0159 | Driver and officer side mounted pump panels are to be stainless steel with a black LINE-X finish. | 1292 |
| 3134-0162 | Driver and Officer side pump panel Escutchion Plate shall be attach with Thumb Latch. | 399 |
| 3136-0000 | Air horn switch at pump panel. Switch to be labeled ''Evacuation Alert''. Location: [#LOC]. | 156 |
| 3136-0001 | Backboard storage compartment in pump module. Locate rearward of crosslays on SM and forward of crosslays on TM. Includes vertical hinged diamond plate access door each side. | 1148 |
| 3136-0002 | Microphone box. Locate at the [#LOC]. | 549 |
| 3136-0003 | Microphone box Cast Products. Locate at/in the [#LOC]. | 512 |
| 3136-0004 | The lower area of the pump compartment to have a four (4) sided heat pan with two (2) removable (side to side) bottoms. Bottoms to be secured in the closed position with mechanical fasteners. | 1115 |
| 3136-0005 | The crosslay divider(s) to be notched both ends for Task Force Nozzle. | 135 |
| 3136-0006 | Two (2) pump compartment heaters are to be mounted in the pump area. Locate as low as possible. | 1813 |
| 3136-0007 | Two (2) FRC Mansaver bars (1) each side. Installed at pump module crosswalk area. The bars are to include [#COL] vinyl covers. | 1403 |
| 3136-0010 | Stainless steel roller assemblies for crosslays and/or speedlays. | 323 |
| 3136-0011 | P-Rubber in flex joint(s) between pump module and/or body modules. | 665 |
| 3136-0012 | Slat flooring. The crosslay and/or speedlays are to have removable slat flooring. | 411 |
| 3136-0013 | Additional Booster Reel Roller Assembly. Locate opposite side of booster reel. | 270 |
| 3136-0015 | (2) vertical mounted booster reel spool guide roller assemblies. Locate (1) each side on trailing edge of beavertails/body (as applicable). For use with rear compartment mounted booster reel or similar. | 533 |
| 3136-0016 | Speedlay module trays mounted to a bi-directional Slide Master tray. | 1355 |
| 3136-0017 | Driver side pump enclosure. The driver side lower pump module to be full width and full depth of the module and include area in upper section for mounting of roll-up door. | 3378 |
| 3136-0018 | Officer side pump enclosure. The officer side lower pump module to be full width and full depth of the module and include area in upper section for mounting of roll-up door. | 3378 |

| Item No. | Description | |
|---|---|---|
| 3136-0020 | Air horn switch at pump panel. Switch to be labeled EMERGENCY EVACUATION. Label to have red back ground with white letters. Location: [#LOC]. | 161 |
| 3136-0023 | Microphone Box Cast Products. Locate at/in the [#LOC]. | 544 |
| 3136-0024 | Crosslays to accomadate extra capacity. | 586 |
| 3136-0026 | The crosslay divider(s) to have a hand hold cutout on outboard edge each side of divider(s). | 284 |
| 3136-0029 | Air horn switch at pump panel. Switch to be labeled ''Air Horn''. Location: [#LOC]. | 156 |
| 3136-0030 | Diamond plate cover for Vogel Auto Lube System. Cover to have cut-outs for checking system fluid levels. Location: driver's side of dunnage pan. | 171 |
| 3136-0031 | Removable Speedlay Tray(s). The floor of the tray(s) to be slotted to prevent the accumulation of water and allow for ventilation of wet hose. | 668 |
| 3136-0033 | Crosslay divider(s) to be lowered approx 5'' to provide room for bail handled nozzle(s) below cover. | 135 |
| 3136-0034 | Microphone box 10W X 6H X 11D located on pump operator panel. | 625 |
| 3136-0037 | Top mount walkway compartments. Includes spring mounted hinged doors with push button latch. Each compartment includes (1) incandescent light and wired to door adjar indicator. | 998 |
| 3136-0042 | Stainless steel roller assemblies for crosslays and/or speedlays. Rollers on side extrusions only and scuff plates on bottom extrusions. | 843 |
| 3136-0044 | Pump panel compartments with push button latch. Locate (1) driver side pump panel and (1) officer side pump panel. Compartments to be located in lower forward corner of pump panels. Compartments to be approx. 14" wide x 14" high x 14" deep. | 2048 |
| 3136-0045 | Microphone Box Cast Products. Locate at/in the [#LOC]. | 544 |
| 3136-0049 | Deckgun to be located offset to the driver side of the dunnage storage pan. | 737 |
| 3136-0050 | Extreme weather heat pan plates. Includes interior module area mounted plates for increasing the lower heat pan (forward and rearward) into the lower area of the module for increased heat retaining. | 477 |
| 3136-0051 | Air horn switch at pump panel. Switch to be labeled ''Code Red''. Location: [#LOC]. | 156 |
| 3136-0053 | Microphone box. Locate at the [#LOC]. Microphone box to be 9"W x 11"H x 6.5"D. | 685 |
| 3136-0054 | Deckgun to be located offset to the driver side of the dunnage storage pan. Deckgun piping to be recessed as low as possible for use with Akron Apollo Hi-Riser #3431 | 737 |
| 3136-0055 | The speedlay divider(s) to be held 12" short both ends for Nozzles. | 425 |
| 3136-0056 | The crosslay divider(s) to be held 12" short both ends. | 447 |
| 3136-0059 | Speedlay module tray(s) mounted to a directional SlideMaster tray. SlideMaster to have 100% extension to one side. | 1556 |
| 3136-0061 | Heat pan removable bottoms to have screws and nuts in place of butterfly latches. | 303 |
| 3136-0062 | Crosslay divider(s) to be adjustable front to rear. | 1053 |
| 3136-0064 | Heat pan. The lower area of the pump compartment to have a four (4) sided heat pan with two (2) removable (side to side) bottoms. Bottoms to be secured in the closed position with butterfly latches. | 1115 |
| 3136-0066 | Microphone box. Dimensions for microphone box are 12.5" wide x 8" high x 6" deep. Locate at the [#LOC]. | 602 |
| 3136-0067 | DEF Tank mounting provision in right side of pump compt. Includes tank supports heat shield and tank fill access either through pump access door or separate door as applicable. | 399 |
| 3136-0069 | Speedlay module tray(s) mounted to a directional Slide Master tray. Slide Master to have 100% extension to the officer side. | 1556 |
| 3136-0070 | Stainless steel scuff plate assemblies for speedlays. Scuff plates to be on top bottom and sides of each opening. | 843 |
| 3136-0071 | Microphone Box Cast Products. Locate at/in the [#LOC]. | 512 |
| 3136-0073 | Removable Poly Speedlay Tray(s). The floor of the tray(s) to be slotted to prevent the accumulation of water and allow for ventilation of wet hose. Includes vertical slotted hand hold cutouts on each end to facilitate easy removal of the hose tray. | 612 |
| 3136-0074 | Stainless steel scuff plates for crosslays and/or speedlays. | 376 |
| 3136-0076 | Pump module mounted 3 sided light tower shield with approx 28 degree side slope to the driver side. The shield to be even with top of the body and painted job color. | 1318 |
| 3136-0078 | Top mount walkway compartments. Includes spring mounted hinged doors with push button latch. Each compartment includes (1) LED light and wired to door adjar indicator. | 998 |
| 3136-0079 | Q2B switch at pump panel. Switch to be labeled "Evacuation Alert". Location: [#LOC]. | 156 |
| 3136-0080 | Compartment below the top mount walkway to be labeled "SHOVELS" on each door. | 62 |
| 3136-0081 | A pump compartment heater with 110V blower to be mounted in the pump area. | 1413 |
| 3136-0083 | Removable Poly Speedlay Tray. The floor will be notched for the preconnect swivel to be positioned as required with the tray in the stowed position. The floor of the tray(s) to be slotted to prevent the accumulation of water and allow for ventilation of wet hose. | 612 |
| 3136-0085 | Cast Products EB0010-1-A microphone box. Locate on driver side pump panel. Hinge door to the right. | 591 |
| 3136-0086 | Notched crosslay divider(s) on both ends for preconnect line(s) nozzle end storage with NFPA cover(s) in closed position. Additional 45 degree angle notch on inside edge on each side. Crosslay divider(s) to be held 1" short below crosslay cover. | 333 |
| 3136-0087 | Aluminum splash guard over top of hydraulic pump for cab tilt. | 211 |

| Item No. | Description | |
|---|---|---|
| 3136-0088 | Captive booster reel rollers mounted through panel/module. Locate to booster reel side and size for width of reel assembly. | 441 |
| 3136-0090 | Speedlay tray - removable. Tray includes a 1.25" extruded alum handle low on each end of tray and slots down each side to facilitate lifting. The floor of the tray shall have poly slides and be slotted to prevent the accumulation of water and allow for ventilation of wet hose. | 668 |
| 3136-0091 | Vertically hinged access door with push button latch for cord reel in driver side of dunnage pan. Includes cut-out in dunnage pan for access to cord reel rollers. Mount junction box to inside of access door. | 523 |
| 3136-0096 | Stainless steel roller assemblies for crosslays. Includes handrail the width of the crosslays in place of bottom roller. | 468 |
| 3136-0098 | Microphone box. Dimensions for microphone box are 12" wide x 12" high x 6" deep. Locate at the [#LOC]. | 624 |
| 3136-0099 | Captive booster reel rollers. (1) mounted through dunnage pan floor inboard of booster reel and (1) thru pump access door. Locate to booster reel side and size for width of reel assembly. | 441 |
| 3136-0100 | Notched Speedlay divider(s) on both ends for connecting preconnected hoses. Notch to be 12"L X 4"H enough room to use a spanner wincher for connecting hoses. | 105 |
| 3136-0102 | Booster Reel Riser for rollers. Locate with officer side dunnage pan rollers. | 100 |
| 3136-0103 | Booster Reel Riser for rollers. Locate with driver side dunnage pan rollers. | 99 |
| 3136-0107 | Microphone box. Locate at the [#LOC]. Microphone box to be 9"W x 11"H x 8"D. Locate Pump operator panel. | 685 |
| 3136-0108 | (2) vertically mounted booster reel spool guide roller assemblies. Locate (1) each side inside rear body compartment opening. For use with rear compartment mounted booster reel. | 533 |
| 3136-0109 | Removable Poly Box(s). Box to be located in lower transverse storage area (one each side) approx. 15" high x 14" wide x 34" deep. The floor of the box(es) to be slotted to prevent the accumulation of water and allow for ventilation of wet hose. | 612 |
| 3136-0111 | Microphone box. Dimensions for microphone box are 8" wide x 12" high x 6" deep. Locate at the [#LOC]. | 602 |
| 3136-0114 | The running board(s) to be notched for Pistion Intake Valve. Location(s): [#LOC]. | 518 |
| 3136-0115 | The lower area of the pump compartment to have a four (4) sided heat pan with two (2) removable (side to side) bottoms. Lower section of pan designed to provide the maximum amount of ground clearance. Bottoms to be secured in the closed position with butterfly latches. | 1115 |
| 3136-0116 | DEF Tank mounting provision in left side pump compt to the rear of the pump. Includes tank supports and tank fill access door. | 352 |
| 3136-0117 | P-Rubber in flex joint(s) between pump module and/or body modules. Horizontal across tops and along sides at flex joint(s). | 665 |
| 3136-0118 | A two (2) piece aluminum pan shall be bolted in place below the pump controls within the pump module. This pan shall utilize .090 aluminum plate to provide a shield to reduce heat loss as the pump controls exit the pump module for the top mount control panel. | 290 |
| 3136-0120 | Captive booster reel rollers mounted on booster reel assembly. Rollers sized for width of reel assembly. | 441 |
| 3136-0121 | Speedlay tray - Polypropylene - removable. Tray includes pull out grab handle (poly dowel) down low on each end to facilitate lifting. The trays shall be made from Polypropylene the floor of the tray shall be slotted to prevent the accumulation of water and allow for ventilation of wet hose. | 948 |
| 3136-0122 | Commercial chassis requires 3" additional to cab and body gap due to exhaust requirements. | 375 |
| 3136-0126 | Microphone box. Dimensions for microphone box are 7.5" wide x 15" high x 11" deep. Locate at the [#LOC]. | 602 |
| 3136-0127 | The pump module storage pan shall be upgraded to include a hinged cover. The hinged cover shall be constructed of 3/16" embossed aluminum tread plate include a grab handle (2) butterfly latches and hold open device(s). The cover shall be included in the door ajar circuit and may be used a walking surface. | 569 |
| 3136-0129 | Horizontally hinged access door with D-ring latch for access to officer side of dunnage pan. Includes cut-out in dunnage pan. | 523 |
| 3136-0130 | Speedlay tray - Polypropylene - removable. Tray includes pull out grab handle (poly dowel) down low on each end to facilitate lifting. The tray(s) shall be sized approximately 18" H X 10" W. The tray(s) shall be made from Polypropylene the floor of the tray shall be slotted to prevent the accumulation of water and allow for ventilation of wet hose. | 948 |
| 3136-0133 | Removable Poly Speedlay Tray(s). The floor of the tray(s) to be slotted to prevent the accumulation of water and allow for ventilation of wet hose. | 612 |
| 3136-0135 | Removable Poly Speedlay Tray(s). The floor of the tray(s) to be slotted to prevent the accumulation of water and allow for ventilation of wet hose. Trays will be equipped with a handle each side to assist in removing from speedlay storage area. | 612 |
| 3136-0136 | Removable speedlay tray(s). The floor of the tray(s) shall be sloped from a raised position in the middle slanted downward towards each end. Additionally the floors shall be slotted to prevent the accumulation of water and allow for ventilation of wet hose. There shall be slotted hand holds on each side of the tray (IPO grab handles on each end). | 816 |

| Item No. | Description | |
|---|---|---|
| 3136-0137 | All drains within the pump module shall be bundled together to exit the heat pan as a bundle beneath the pump rather than separately. | 229 |
| 3136-0138 | Pump module storage pan. | 842 |
| 3136-0139 | Crosslay double 7.5" wide each to hold up to 200' of 2.0" DJ hose (each). | 825 |
| 3136-0140 | Crosslay double 7.5" wide each with extra depth to hold up to 400' of 2.0" DJ hose (each). | 1016 |
| 3136-0141 | Crosslay double 4.25" wide single stack to hold up to 200' of 2.0" DJ (each). | 987 |
| 3136-0142 | Crosslay triple 4.25/4.25/5" wide single stack to hold up to 200' of 2.0" DJ (each) in front lays and 150' to 200' of 2.5" DJ hose in rear lay. | 1463 |
| 3136-0144 | Crosslay single 5" wide single stack to hold up to 200' of 2.0" DJ or 150' to 200' of 2.5" DJ hose. | 547 |
| 3136-0145 | Insulation - front pump compartment access door. | 119 |
| 3136-0146 | Compartments for TM walkway (PR). Includes hinged door each side with push button latch and LED compartment light. Requires TM pump module with walkway. | 821 |
| 3136-0149 | A removable .187" aluminum treadplate cover panel shall be installed at the front of the speedlay module adjacent to the crosswalk assembly. Panel shall be secured with lift & turn latches for quick removal and for accessibly for hose loading. SS Product only. | 428 |
| 3136-0151 | Microphone box. Dimensions for microphone box are 12" wide x 12" high x 6" deep. Locate at the driver side pump panel. With hold open device. | 736 |
| 3136-0152 | Air horn switch at pump panel. Switch to be labeled ''Evacuation Alert'' with a 4" x 2.5" orange backing plate. | 212 |
| 3136-0153 | (2) vertically mounted booster reel spool guide roller assemblies. Locate (1) each side on trailing edge of body 3x3 down low. | 533 |
| 3136-0154 | Enclosed transverse compartment above pump gauge panel. Approximately 24" H x 15" W x 76" L. Includes vertically hinged SS doors each side and D-ring latch with gas tube hold opens and the top of the compartment will be embossed aluminum treadplate. | 1939 |
| 3136-0157 | Stainless steel scuff plates for speedlays. Includes full height of exterior extrusion to lower tool compartment. | 348 |
| 3136-0158 | Upper and/or lower speedlay tray 8.5" interior width. - removable. Tray includes a 1.25" extruded alum handle low on each end of tray and slots down each side to facilitate lifting. The floor of the tray shall have poly slides and be slotted to prevent the accumulation of water and allow for ventilation of wet hose. | 668 |
| 3136-0162 | Hi Rise tray - removable. Tray includes a 1.25" extruded alum handle low on each end of tray and slots down each side to facilitate lifting. The floor of the tray shall have poly slides and be slotted to prevent the accumulation of water and allow for ventilation of wet hose. | 668 |
| 3136-0164 | Stainless steel scuff plate assemblies for speedlays & crosslays. Scuff plates to be on top bottom and sides of each opening mechanically fastened with screws. | 1293 |
| 3136-0165 | Microphone box. Dimensions for microphone box are 14" wide x 6" high x 6" deep. Locate at the pump operator panel. | 602 |
| 3136-0166 | Removable Speedlay Tray(s). The floor of the tray(s) to be slotted to prevent the accumulation of water and allow for ventilation of wet hose. The front and rear walls of tray(s) to be the same height. There shall be vertical slots on each side of the tray ( in place of extruded grab handle) to facilitate lifting. This tray shall only be used with taller speedlay opening so the preconnect swivel shall be at the top (as opposed to rear wall) and walls of the tray can be same height. | 668 |
| 3136-0178 | Microphone box. Dimensions for microphone box are 14" wide x 5" high x aprox 6" deep. Locate at the the right side of the top mount gauge panel. SS top mount product only | 629 |
| 3136-0179 | Recessed area in storage pan for deck gun to be as low as practical. Deck gun connection to terminate 3" below top of pump module. | 699 |
| 3136-0180 | Crosslay triple 4.25/4.25/4.25" wide single stack to hold up to 200' of 2.0" DJ in each hose lay. | 1463 |
| 3136-0181 | Speedlay tray - removable - extra length for full width module. Tray to be 14W x 9H x Full width of module. Tray includes a 1.25" extruded alum handle on each end of tray and slots down each side to facilitate lifting. The floor of the tray shall have poly slides and be slotted to prevent the accumulation of water and allow for ventilation of wet hose. | 770 |
| 3136-0182 | Crosslay double 6.25" wide single stack to hold up to 200' of 2.0" DJ or 150' of 3.0 DJ (each). | 987 |
| 3136-0183 | Backboard/pike pole storage compartment located to rear of crosslays. Includes partition between backboard and pike poles and vertically hinged diamond plate access door each side. Note pike poles will only be accessible from driver side and longest pike pole that compartment will accommodate is 6'. | 1320 |
| 3136-0184 | Crosslay double 5.5" wide single stack to hold up to 200' of 2.0" DJ (each) or 150' of 3.0 DJ (each). | 987 |
| 3136-0185 | Extra Capacity Removable Poly Speedlay Tray(s). Tray(s) to be approx 8.25" wide inside X 17.50" high inside. The floor of the tray(s) to be slotted to prevent the accumulation of water and allow for ventilation of wet hose. | 612 |
| 3136-0186 | Air horn switch at pump panel. Switch to be labeled ''Evacuation Alert'' with red cover. Location: [#LOC]. | 156 |
| 3136-0190 | Backboard storage compartment in pump module. Locate rearward of crosslays on SM and forward of crosslays on TM. Includes vertical hinged diamond plate access door each side. Backboard storage to be 10" wide. | 1104 |

| Item No. | Description | |
|---|---|---|
| 3136-0191 | LINE-X package for pump module storage pan(s): Includes all surfaces of the pan visible from top of the truck. Also includes all platework fabricated at E-ONE mounted inside the pan such as hydraulic system cover generator shield reservoir cover cooler cover cord reel cover boxes dividers trays etc as applicable. | 804 |
| 3136-0192 | Zolatone (same color as pump panels) package for top mount pump module platework: Includes pump module upper side panels panels and access door(s) in front of the module adjacent to the walkway back panel of speedlay module adjacenet to the walkway if applicable tool compartment doors on walkway and speedlay as applicable. | 468 |
| 3136-0193 | Crosslay quadruple single stack. Forward two (2) lays to hold up to 200' of 1.75" DJ (each). Rearward two (2) lays to be dry lays that hold up to 200' of 1.75" DJ or 150 of 3.0" DJ (each). | 1922 |
| 3136-0194 | Crosslay triple 4.25/4.25/12" wide single stack to hold up to 200' of 2.0" DJ (each) in front lays and double stack to hold 200' of 3.0" DJ hose in rear lay. | 1463 |
| 3136-0195 | Pump module upper side panels shall be smooth plate painted job color (dual tone as applicable). Smooth plate Zolatone (same color as pump panels) finish shall be applied to panels and access door(s) in front of the module adjacent to the walkway speedlay panels (back panel of seperate speedlay module adjacent to the walkway and front panel facing the cab) as applicable tool compartment doors on walkway and speedlay as applicable. | 468 |
| 3136-0196 | Backboard/pike pole storage compartment located to rear of crosslays. Two (2) pikes to be offset rear in the compartment and up high. One (1) pike pole accessible from driver side and one (1) to be accessible from the officer side. Longest pike pole that compartment will accommodate is 6'. | 1320 |
| 3136-0197 | Backboard storage compartment in pump module. Locate rearward of crosslays on SM and forward of crosslays on TM. Includes vertical hinged diamond plate access door each side hinged rearward. Opening to be 7" wide. | 1148 |
| 3136-0198 | Backboard and rescue bag storage area for customer furnished and installed items. Module for (2) 19.5''W x 2''H x 75''L backboards in the forward section. Rearward left side sections (1) Pedi board bag (1) splint board bag (1) collar bag and (1) KED bag. Module constructed of 1/8" smooth aluminum plate. | 730 |
| 3136-0200 | Crosslay triple 4.25/ 5"/ 4.25" wide single stack to hold up to 250' of 1.75" DJ (each) in front and rear lays and 200' 2.5" DJ hose in center lay. The crosslay depth shall be 28" deep. | 1463 |
| 3136-0201 | Cross lay divider(s) to be adjustable front to rear in slotted holes added to cross lay floor. | 381 |
| 3136-0202 | Speedlay single - double stack to hold up to 200' of 2.0" DJ hose located in the rear pump compartment. | 547 |
| 3136-0204 | Modify the upper rear officers side pump module and dunnage pan. Assemble and install a 4-bottle SCBA storage rack (consisting of an 8" aluminum tube assy; 2-tubes wide/2-tubes high) for SCBA bottle storage up to 7.5" diameter x up to 25" long (including valve). Includes a Lift-up style door (matching pump access door material) w/gas spring (wired to door ajar alert) bottle tube saftey straps and a removable aluminum diamond plate protective cover in officers side dunnage pan over the bottle rack. | 812 |
| 3136-0205 | Removable Aluminum Speedlay Tray(s) with slotted floor to prevent the accumulation of water and allow for ventilation of wet hose. Includes vertical slotted hand hold cutouts on each end to facilitate easy removal of the hose tray. No lip No grab rod. | 668 |
| 3136-0206 | Removable Poly Speedlay Tray(s). The floor of the tray(s) to be slotted to prevent the accumulation of water and allow for ventilation of wet hose. The front and rear walls of tray(s) to be the same height. There shall be vertical slots on each side of the tray ( in place of extruded grab handle) to facilitate lifting. Tray to have special notching for easy removal of tray(s) from module area. | 612 |
| 3136-0207 | Crosslay double 4.25"/5.0" wide single stack to hold up to 200' of 2.0" DJ and 150' of 2.5" DJ | 987 |
| 3136-0208 | Cross lay double Lay 1- 4.25in. wide single stack to hold up to 200ft. of 2.0in. DJ and Lay 2- 7.75in. wide double stack to hold 200ft of 2.0in DJ with lower stacks or more with excess capacity as configured. | 1061 |
| 3136-0209 | Speedlay tray - removable. Tray includes a 1.25" extruded alum handle low on each end of tray and slots down each side to facilitate lifting. The floor of the tray shall have poly slides and be slotted to prevent the accumulation of water and allow for ventilation of wet hose. Tray to be 8" tall IPO standard. | 635 |
| 3136-0210 | Crosslay double 5.5" wide single stack to hold up to 200' of 2.0" DJ (each). | 987 |
| 3136-0211 | The pump module storage pan shall be upgraded to include a two piece cover for the Wabasto system. The cover shall be constructed of 3/16" embossed aluminum tread plate include a grip strut insert in the section over the heater to allow heat dissipation. It shall be bolted down using four 5/16" HEX-head bolts in each section for easy removal. The cover may be used a walking surface. | 569 |
| 3136-0212 | Crosslay single 10.25" wide single stack to hold up to 300' of 2.5" DJ hose. | 547 |
| 3136-0213 | LINE-X package for enclosed pump module: All sheet metal surfaces including compartment walls pump access doors storage compartment walls and doors running boards etc shall be coated with LINE-X. Does not include pump panel or gauge panel which are part of a seperate package. | 448 |

| Item No. | Description | |
|---|---|---|
| 3136-0214 | Crosslay triple 7.75/7.75/10" wide double stack to hold up to 200' of 2.0" DJ (each) in front lays and 200' of 2.5" DJ hose in rear lay. | 1463 |
| 3136-0217 | Crosslay triple 4.25/4.25/5in. wide single stack to hold up to 200ft. of 2.0in. DJ (each) in front lays and 150-200ft. of 2.5in. DJ hose in rear lay. Cross Lay lowered height to be 68in. from ground for ease of deployment. | 1495 |
| 3136-0218 | Diamond plate protective cover shall be provided for the foam system hydraulic cooling fan assembly. Cover shall be partially made out of expandable metal or similar design for sufficient air flow. | 401 |
| 3136-0219 | Diamond plate protective cover shall be provided for the foam system hydraulic reservoir. Cover shall be designed with the reservoir fill cap protruding through it for easier refilling. | 261 |
| 3136-0220 | Crosslay triple 4.25/4.25/6" wide single stack to hold up to 200' of 2.0" DJ (each) in front lays and single stack to hold 150' of 3.0" DJ hose in rear lay. | 1463 |
| 3136-0221 | Crosslay quadruple single stack. All four (4) lays to hold up to 200' of 1.75" DJ (each). | 1922 |
| 3136-0222 | Durabak package for pump module storage pan(s): Includes all surfaces of the pan visible from top of the truck. Also includes all platework fabricated at E-ONE mounted inside the pan such as hydraulic system cover generator shield reservoir cover cooler cover cord reel cover boxes dividers trays etc as applicable. | 804 |
| 3136-0224 | Aluminum speedlay module with divider and Duradek flooring. Constructed using 1/4" thick aluminum with a DA sanded finish. | 1035 |
| 3136-0225 | The upper side panels of the TM pump module to be smooth plate painted Zolatone to match the lower pump panels. | 281 |
| 3136-0226 | The upper side panels of the TM pump module to be stainless steel to match the lower pump panels. | 281 |
| 3136-0227 | Crosslay quad 7.50/7.50/7.50/7.50 wide double stack to hold up to 200ft. of 1.75in. DJ hose (each) per lay. | 2034 |
| 3136-0228 | Upper storage compartment in pump module. Located in the upper rear corner of pump module. Includes driver side vertical hinged diamond plate access door. | 1148 |
| 3136-0229 | Crosslay triple 5.50/5.50/5.50" wide single stack to hold up to 200' of 2.0" DJ in each hose lay. | 1463 |
| 3136-0230 | Crosslay double 7.75"/ 7.75" wide double stack to hold up to 200' of 2.0" DJ (each) in front lays and dry lay 10" wide to hold 150' of 2.5" DJ hose in rear lay. | 1463 |
| 3136-0231 | Transverse storage compartment in pump module. Locate rearward of crosslays on SM and forward of crosslays on TM. Includes vertical hinged diamond plate access door each side. Width and Height of storage based on available space forward (or) aft of the crosslays. | 1148 |
| 3136-0232 | Crosslay triple 4.75/4.75/5.50" wide single stack to hold up to 200' of 2.0" DJ (each) in front lays and 150' of 2.5" DJ hose in rear lay. | 1463 |
| 3136-0233 | A recessed pocket area in the rearward portion of the officer side running board shall be provided. It is a square fabricated assembly designed to store (1) 2.5 gallon pressurized water can fire extinguisher. The extinguisher shall be recessed in the running board approximately half of it height. A nylon buckle strap shall be provided to secure item for transit. Extinguisher not included. | 291 |
| 3136-0234 | Crosslay triple 4.25/4.25/6" wide single stack to hold up to 200' of 2.0" DJ (each) in front lays and 200' of 3.0" DJ hose in rear lay. | 1463 |
| 3136-0235 | Backboard and Pike Pole storage compartment in pump module. Locate rearward of crosslays on SM and forward of crosslays on TM. Includes vertical hinged diamond plate access door each side. Storage for one (1) backboards forward and three (3) pike poles on the rear wall stored vertically. The pike pole tubes to be inside each door opening 8" (60" long tubes). The door opening to be 6" wide. | 1694 |
| 3136-0236 | Cross lay double 7.5" wide double stack to hold up to 200ft. of 2.0in. DJ (each) Cross Lay lowered height to be 66in. from ground for ease of deployment. Front module headboard height to be reduced aprox. 12in. on an 80" high module or as applicable to hose load and module height if otherwise optioned. | 1495 |
| 3136-0237 | A 19" wide preconnect area shall be provided on the pump module to accomodate three (3) speedlay hosebeds. The lower area shall each have two (2) speedlays each with a capacity to hold 200` of 1.75" DJ fire hose double stacked. The upper area shall have one (1) speedlay with a capacity to hold 200` of 2.5" DJ fire hose triple stacked. | 1463 |
| 3136-0238 | Storage pan access lid(s) made from embossed diamond plate. The lid(s) shall be hinged outboard with two grab handles per lid and gas shock hold opens. | 775 |
| 3136-0239 | Storage pan side access door(s) made from aluminum smooth plate (same finish as pump module). The door(s) shall be lift up style with push button latch(es) and gas shock hold opens. | 507 |
| 3136-0240 | The pump module shall include (3) 1.5" speedlays and (1) 2.5" crosslay rearward of the stacked preconnect area. | 1649 |
| 3136-0241 | Crosslay(s) to be lowered per customer specific requirement. | 286 |
| 3136-0243 | Crosslay single 10" wide single stack to hold up to 300' of 1.75" DJ or 250' of 2.5" DJ hose. | 932 |
| 3136-0244 | The walls of top mount walk way tool storage compartments to have (2) additional louver patterns in rear wall of each compartment for a total of (3) each side IPO standard for additional ventilation. | 205 |

| Item No. | Description | |
|---|---|---|
| 3136-0245 | Crosslay triple 5.50/5.50/5.50" wide single stack to hold up to 200' of 2.0" DJ (each) in front lays and 150' to 200' of 2.5" DJ hose in rear lay. | 1463 |
| 3136-0246 | Maximum size brushed stainless steel fully removable bolt-on access panel shall be installed on the driver side of the pump enclosure lower pump connection panel. | 523 |
| 3136-0247 | The module design shall include a storage area rearward of the cross lays for (2) New York Hooks each 72" long. The storage area shall have an opening of approximately 20in. high x 5in. wide. The hooks shall be secured with 1/8in. (.125) aluminum treadplate vertical hinged doors on each end of the compartment with push button latches. There shall be a horizontal divider 8in. off storage compartment floor and the door shall be tied to door ajar. | 1178 |
| 3136-0248 | Crosslay triple 6.5/6.5/8" wide single stack to hold up to 200' of 2.0" DJ (each) in front lays and single stack to hold up to 200' of 3.0" DJ hose in rear lay. | 1463 |
| 3136-0249 | Booster Reel Riser for rollers. Locate with officer side dunnage pan rollers. Riser to have increased height to clear the top of the body. | 193 |
| 3136-0250 | The upper pump module shall be extended to the full width(side to side) of the lower pump module. | 1058 |
| 3136-0251 | Crosslay double 7.5" wide forward and 10.5" wide rearward each with extra depth. Forward lay to hold up to 400' of 2.0" DJ hose and rearward lay to hold up to 400' of 2.5" DJ hose. | 1121 |
| 3136-0252 | Crosslay triple 5.50 / 5.50 / 5.50" wide single stack to hold up to 200' of 2.0" DJ (each) in front lays and 200' of 2.5" DJ hose in rear lay. | 1463 |
| 3136-0254 | Divider in back board compartment located 3" from the front wall. Rearward of the divider a full height stop located 50" from the door opening on the officer side for a 1" x 17" high x 45" long airbag. | 252 |
| 3136-0255 | Speedlay tray - Polypropylene - removable. Tray includes pull out relief grab handles each end in side walls or as applicable in place of dowels to facilitate lifting. The trays shall be made from Polypropylene the floor of the tray shall be slotted to prevent the accumulation of water and allow for ventilation of wet hose. | 948 |
| 3136-0256 | The pump module shall include (2) 1.5" speedlays and (1) 2.5" speedlay preconnect area. | 1439 |
| 3136-0257 | The pump module shall include (3) 1.5" speedlays. | 1439 |
| 3136-0259 | Pump module upper side panels shall be Flush smooth plate painted job color (dual tone as applicable). | 966 |
| 3136-0260 | Air horn switch at officer side pump panel. Switch to be labeled ''Evacuation Alert'' with a 4" x 2.5" orange backing plate. | 212 |
| 3136-0262 | The pump module shall include (2) 1.5" speedlays and (1) 2.5" crosslay. | 1439 |
| 3136-0263 | The pump module shall include (2) 1.5" speedlays. | 1439 |
| 3136-0264 | Crosslay quadruple 5.5/5.5/5.5/6 wide single stack to hold up to 200' of 1.75" DJ in the front two lays and up to 150' of 2.5" in the rear two lays. Rear crosslay is a dry lay. | 1922 |
| 3136-0265 | Speedlay double - double stack to hold up to 200' of 1.75" DJ hose each located in the forward area of the pump module. Above the speedlay will be an open storage area for customer supplied storage. | 1504 |
| 3136-0266 | Speedlay(s) to be lowered per customer specific requirement. | 286 |
| 3136-0267 | The pump module shall include (1) 1.5" speed lay and (1) 2.5" speed lay. | 1439 |
| 3136-0268 | Booster Reel Riser for rollers. Locate with officer side reel rollers. | 100 |
| 3136-0274 | Top mount walkway shall be enclosed with hinged doors on each side of walkway entrance. | 1799 |
| 3136-0275 | Crosslay quadruple single stack. 4.25/4.25/4.25/5" wide single stack to hold up to 200' of 2.0" DJ (each) in front lays and 150' of 2.5" DJ hose in rear lay. | 1922 |
| 3136-0277 | Backboard storage; (1) industry standard backboard stored on edge inside an enclosed compartment rearward of crosslays accessible from the officer side. Compartment full height and width (side to side) of the dunnage area constructed of aluminum treadplate. Brushed stainless door with push button latch. | 1072 |
| 3136-0278 | Crosslay double 10/15" wide with extra depth. Front lay to be double stack and to hold up to 100' of 2.5" DJ along with 200' of 1.75" DJ and rear lay to be triple stack and to hold 200' of 2.5" DJ hose. Crosslay lowered height to be 66" from ground for ease of deployment. | 1495 |
| 3136-0280 | Pump module storage pan to be smooth plate. | 842 |
| 3136-0282 | Compartments for TM walkway (PR). Includes embossed diamond plate lift-up walkway lids each side for access with butterfly style latch(es) for securing in the closed position and LED compartment light. Requires TM pump module with walkway. | 821 |
| 3136-0283 | Pump module exterior platework to have swirl finish. Includes tool compartment access doors front access panel and upper panels on top mounts. Does not include walkway or walkway steps. | 1668 |
| 3136-0284 | The pump module shall include (2) 1.5" speedlays and (1) 1.5" crosslay. | 1439 |
| 3136-0286 | Pump module upper side panels shall be smooth plate painted job color (dual tone as applicable). | 468 |
| 3136-0288 | Crosslay triple 4.25/4.25/5" wide single stack to hold up to 200' of 2.0" DJ in front (2) lays and 200' of 2.5" DJ hose in single rear lay. | 1463 |

| Item No. | Description | |
|---|---|---|
| 3136-0289 | Transverse compt with vertical centered divider forward over pump panel. Includes vertical hinged to the front dia plt door tied to door ajar on each end with gas shock D-Ring latch and compartment light. | 1134 |
| 3300-0007 | Door single vertical hinged painted. Location(s): [#LOC] | 824 |
| 3300-0008 | Door double vertical hinged painted. Location(s): [#LOC]. | 917 |
| 3300-0009 | Door single vertical hinged diamond plate. Location(s): [#LOC] | 576 |
| 3300-0010 | Door double vertical hinged diamond plate. Location(s): [#LOC]. | 824 |
| 3300-0011 | Door single horizontal hinged lift-up box pan configuration painted. Location(s): [#LOC] | 801 |
| 3300-0012 | Door single horizontal hinged lift-up box pan configuration diamond plate. Location(s): [#LOC] | 622 |
| 3300-0013 | Door roll up short (up to 45") with satin finish POK. Location(s): [#LOC] | 831 |
| 3300-0014 | Door roll up tall (greater than 45") with satin finish POK. Location(s): [#LOC] | 1188 |
| 3300-0015 | Door roll up short (up to 45") with painted finish POK. Location(s): [#LOC] | 1328 |
| 3300-0016 | Door roll up tall (greater than 45") with painted finish POK. Location(s): [#LOC] | 1682 |
| 3300-0017 | Door roll up short (up to 45") with satin finish ROM. Location(s): [#LOC]. | 924 |
| 3300-0019 | Door roll up tall (greater than 45") with satin finish ROM. Location(s): [#LOC]. | 1318 |
| 3300-0021 | Door roll up short (up to 45") with painted finish ROM. Location(s): [#LOC]. | 1566 |
| 3300-0022 | Door roll up tall (greater than 45") with painted finish ROM. Location(s): [#LOC]. | 1959 |
| 3300-0023 | Door single stainless steel vertical hinged painted. Location(s): [#LOC] | 1031 |
| 3300-0024 | Door double stainless steel vertical hinged painted. Location(s): [#LOC] | 1053 |
| 3300-0025 | Door single horizontal hinged drop down painted. Location(s): [#LOC]. Door(s) will have chain hold open devices. | 662 |
| 3300-0027 | Door bi-fold horizontal hinged diamond plate. Location(s): [#LOC]. Includes upper door mounted guide roller assembly and the lower door will have chains for side or upper rear body mount or bumper style for lower rear body mounted. | 917 |
| 3300-0028 | Door tri-fold vertical hinged diamond plate. Location(s): [#LOC] | 1246 |
| 3300-0029 | Door single stainless steel horizontal hinged lift-up painted. Location(s): [#LOC] | 1056 |
| 3300-0030 | Door double 3-point vertical hinged painted. Location(s): [#LOC] | 1827 |
| 3300-0062 | Keyed compartment door latch with #1250 key. Location(s): [#LOC]. | 88 |
| 3300-0063 | Keyed roll-up compartment door with #1250 key. Location(s): [#LOC]. | 155 |
| 3300-0064 | All apparatus doors body and chassis are to be keyed alike. Not avail on Commercial Chassis. Requires keyed latch option to be included in shop order. | 341 |
| 3300-0065 | Electric lock for an ROM roll-up door (EA). The door to lock on both sides of compartment as applicable. Includes manual J236 key lock. Location(s): [#LOC] | 678 |
| 3300-0066 | Drip pan for a ROM roll-up door (EA). Location(s): [#LOC]. | 187 |
| 3300-0076 | Door double 3-point vertical hinged painted. Location(s): [#LOC] | 1331 |
| 3300-0078 | Cleveland door springs provided for all vertical hinged body doors. | 169 |
| 3300-0080 | Stainless steel interior body door overlay. Each hinged body door interior surface to have a stainless steel overlay. Overlay to fit around any surface mounted items on the door. | 3430 |
| 3300-0081 | Keyed compartment door latch (Best Lock). Location(s): [#LOC] | 224 |
| 3300-0092 | Door double 3-point vertical hinged diamond plate. Location(s): [#LOC]. | 1762 |
| 3300-0096 | Keyed roll-up compartment door with #J236 key. Location(s): [#LOC] | 155 |
| 3300-0097 | Keyed compartment door latch with #J236 key. Location(s): [#LOC] | 88 |
| 3300-0098 | Roll-up door package Amdor. Includes (2) short satin roll-up doors and (4) tall satin roll-up doors. Door pennant plates to be mounted offset forward of the compartment for better contact of external door slats to header plate brush. | 8940 |
| 3300-0099 | Intergrated sill plate. Water Dam type door sill for ROM rollup door. Location(s):[#LOC] | 160 |
| 3300-0100 | Cleveland door springs provided for vertical hinged body door(s). Locate [#LOC]. | 169 |
| 3300-0102 | Polished stainless steel interior body door overlay. Each hinged body door interior surface to have a polished stainless steel overlay. Overlay to fit around any surface mounted items on the door. | 5145 |
| 3300-0103 | Door double vertical hinged smooth plate sanded. Location(s): [#LOC]. | 917 |
| 3300-0104 | Keyed compartment Tri-Mark model 030-1300 door locking latch with (2) TM-700 keys. Location: [#LOC]. | 176 |
| 3300-0105 | Door roll up tall (greater than 45") with satin finish Amdor. Location(s): [#LOC]. | 1721 |
| 3300-0106 | Door roll up short (up to 45") with satin finish Amdor. Location(s): [#LOC]. | 1233 |
| 3300-0107 | Pull down straps for lift-up door. Loc: [#LOC]. | 116 |
| 3300-0119 | Door single vertical hinged smooth plate sanded. Location(s): [#LOC]. | 824 |
| 3300-0120 | Electric lock for a ROM roll-up door (EA). The door to lock on both sides of compartment as applicable. Includes manual 1250 key lock. Location(s): [#LOC] | 678 |
| 3300-0129 | Door bi-fold horizontal hinged smooth plate sanded. Location(s): [#LOC]. | 996 |
| 3300-0130 | Door single horizontal hinged drop-down painted. Includes body mounted stops to support the door in the open position. Location(s): [#LOC]. | 662 |
| 3300-0131 | Door bi-fold horizontal hinged painted. Location(s): [#LOC]. Includes upper door mounted guide roller assembly and the lower door will have chains for side or upper rear body mount or bumper style for lower rear body mounted. | 1136 |

| Item No. | Description | |
|---|---|---|
| 3300-0132 | Door to be notched for LDH hose. Notch on driver side to be approximately 5.75"W x 3.75"H and notch on officer side door to be approximately 10"W x 3.75"H. Location: B1 door. | 330 |
| 3300-0133 | Door single horizontal hinged drop-down sanded smooth plate. Location(s): [#LOC]. | 525 |
| 3300-0134 | Door single horizontal hinged lift-up box pan configuration painted. Includes double D-rings due to width of the door. Location(s): [#LOC] | 801 |
| 3300-0135 | Door double 3-point vertical hinged smooth plate sanded. Location(s): [#LOC]. | 1827 |
| 3300-0137 | Stainless steel interior door overlay for R2. Overlay to fit around any surface mounted items on the door. | 764 |
| 3300-0138 | Keyed compartment door latch with #CH751 key. Location(s): [#LOC] | 88 |
| 3300-0139 | Door double 3-point horizontal hinged painted. Location(s): [#LOC]. Lower door should act as an exterior writing surface w/ adjustable angles. The paddle latch on the second door shall not protrude past the edge of the door. | 1827 |
| 3300-0140 | Door single horizontal hinged drop down diamond plate. Location(s): [#LOC]. | 498 |
| 3300-0141 | Tri-Mark door latch. Location(s): [#LOC]. | 89 |
| 3300-0142 | Stainless steel door single vertical hinged painted. Location(s): [#LOC]. | 824 |
| 3300-0143 | Stainless steel short doors double vertical hinged painted. Location(s): [#LOC]. | 917 |
| 3300-0144 | Stainless steel door horizontal hinged lift-up painted. Location(s): [#LOC]. | 801 |
| 3300-0145 | Stainless steel door single horizontal hinged drop-down painted. Location(s): [#LOC]. | 662 |
| 3300-0146 | Stainless steel tall doors double 3-point vertical hinged painted. Location(s): [#LOC]. | 1827 |
| 3300-0147 | Stainless steel short doors double 3-point vertical hinged painted. Location(s): [#LOC]. | 1331 |
| 3300-0148 | Stainless steel door single vertical hinged brushed unpainted. Location(s): [#LOC]. | 824 |
| 3300-0151 | Drip pan with drain for a ROM roll-up door (EA). Location(s): [#LOC]. | 239 |
| 3300-0164 | Door double vertical hinged w/rotary latches - painted . Location(s): [#LOC] | 917 |
| 3300-0165 | Door double vertical hinged w/rotary latches - smooth plate sanded. Location(s): [#LOC]. | 917 |
| 3300-0166 | Door double vertical hinged w/rotary latches - diamond plate. Location(s): [#LOC] | 824 |
| 3300-0167 | Door double 3-point vertical hinged w/rotary latches - painted. Location(s): [#LOC] | 1827 |
| 3300-0168 | Door double 3-point vertical hinged w/rotary latches - painted. For use with compartments up to 50" high. Location(s): [#LOC]. | 1331 |
| 3300-0169 | Door double 3-point vertical hinged w/rotary latches - smooth plate sanded. Location(s): [#LOC] | 1827 |
| 3300-0174 | Keyed roll-up compartment door with #CH751 key. Location(s): [#LOC]. | 155 |
| 3300-0175 | Door roll up short (up to 45") with satin finish Gortite. Location(s): L2 and R2. | 1184 |
| 3300-0176 | Door roll up tall (greater to 45") with satin finish Gortite. Location(s): L1/R1/L3/R3 and B1. | 1386 |
| 3300-0177 | Door single horizontal hinged drop down painted. Door will have 2 D-ring handles. Location(s): [#LOC]. | 854 |
| 3300-0188 | Drip pan (E-ONE style) for a roll-up door (EA). Location(s): [#LOC]. | 211 |
| 3300-0191 | First closed door of double door compartment to have top and bottom latches (Each). | 259 |
| 3300-0192 | Polished stainless steel overlay on all double pan door's inner pan on body. 95 mid-mount aerial only. Overlay will be full height and should go around latch gas shock castings and lock cover. | 2208 |
| 3300-0195 | Door roll up tall (greater than 45") with painted finish Amdor. Location(s):[#LOC]. | 2334 |
| 3300-0196 | Door double vertical hinged painted includes (2) gas shock-style hold-open device IPOS. Location(s): [#LOC]. | 988 |
| 3300-0197 | Door roll up short (up to 45") with painted finish Amdor. Location(s): [#LOC]. | 2073 |
| 3300-0202 | Door single horizontal hinged drop-down sanded smooth plate. Location(s): [#LOC]. | 525 |
| 3300-0203 | Door to be notched for 4" LDH hose. Notch to be 8.5" W x 3.75" H. Location: top of B1 driver side door. This door is to be the "first opened" door as shown on drawing. | 330 |
| 3300-0204 | Door to be notched for 5" LDH hose. Notch to be approximately 8"W x 2.5 "H. Location: top of B1 officer side door. | 330 |
| 3300-0205 | 3-Point latch double doors to have latch brackets installed with "PULL" tags. | 647 |
| 3300-0206 | Additional roll up door stop latches shall be mounted for B1 at a raised location aligned with the bottom of the ladder tunnel. The raised latches/hooks shall not be included as part the door ajar circuit. | 81 |
| 3300-0207 | Door bi-fold horizontal hinged smooth plate sanded. Location(s): [#LOC]. Includes upper door mounted guide roller assembly and the lower door will have chains for side or upper rear body mount or bumper style for lower rear body mounted. | 1116 |
| 3300-0210 | Door to be notched for 4" LDH hose. Notch to be 8.5" W x 3.75" H. Location: top of B1 officer side door. This door is to be the "first closed" door as shown on drawing. | 330 |
| 3300-0211 | Door to be notched for 3" DJ hose. Notch to be 5" W x 1" H. Location: top of B2 officer side door. This door is to be the "first opened" door as shown on drawing. | 330 |
| 3300-0212 | Keyed compartment Tri-Mark model 030-1300 door locking latch with (2) 1250 keys. Location: [#LOC]. | 176 |
| 3300-0215 | Additional roll up door stop latches (PR) shall be mounted at a raised location aligned with the reduced depth transition area. The raised latches/hooks shall not be included as part the door ajar circuit. Location(s): [#LOC]. | 81 |

| Item No. | Description | |
|---|---|---|
| 3300-0219 | Install dealer supplied roll up doors. The roll up doors for location(s): [#LOC]. shall be dealer supplied. These door kit(s) as supplied will be complete and correct for compartment(s) specified. E-ONE manufacturing shall install these dealer supplied ROM roll up door(s). | 258 |
| 3300-0220 | Reverse hinge single compartment door. Includes vertical mounted drip rail along forward area of compartment opening (in addition to the horizontal drip rail above the door opening). Location(s): [#LOC]. | 171 |
| 3300-0222 | Double door to have latch handle extension installed on secondary door's interior latch with "PULL" tags. Location(s): [#LOC] | 66 |
| 3300-0224 | Pull down straps for ROM roll-up door ipo rope. Location(s): [#LOC]. | 39 |
| 3300-0226 | Drip pan diamond plate with end plates(E-ONE style) for a roll-up door with drain hose. Location(s): [#LOC]. | 374 |
| 3300-0228 | Door double 3-point vertical hinged w/rotary latches - painted. Location: [#LOC]. D-ring primary door located rearward ipo standard. Door double 3-point vertical hinged w/rotary latches - painted. | 1827 |
| 3300-0231 | Door roll up tall (greater to 45") with satin finish Gortite. Location(s):[#LOC]. | 1386 |
| 3300-0239 | Door single vertical hinged painted with the hinge reversed so the door opens opposite of standard. Location(s): [#LOC] | 824 |
| 3300-0247 | Door horizontaly hinged without pan drop down smooth plate sanded. Single point D-Ring latch. Includes (2) hose notches on opening end. Left side notch for 5" LDH and right side for 3" DJ. Location: B2 | 583 |
| 3300-0248 | There shall be single piece compartment door drip rail provided over L1/L2 L5/L6 R1/R2 & R4/R5. Only available with (2) consecutive compartments with like doors. | 222 |
| 3300-0253 | Drip pan with end plates(E-ONE style) for a roll-up door with drain hose. Location(s): [#LOC]. | 374 |
| 3300-0255 | Door double expanded metal (material aluminum) and verticaly hinged. Includes bolt latch and door hold open device. Door to be located inside of body compartment and as close as possible behind exterior body compartment access door. Minimum depth behind expanded doors to be 24 inches. Finish: Sanded aluminum. Locate: R4: forward of partition. | 1028 |
| 3300-0257 | Door roll up short (up to 45") with stainless steel door bar and painted finish ROM. Location(s): [#LOC]. | 1605 |
| 3300-0258 | Door roll up tall (greater than 45") with stainless steel door bar and painted finish ROM. Location(s): [#LOC]. | 1999 |
| 3300-0259 | Door roll up tall (greater than 45 in.) with painted finish Hansen. Location(s): [#LOC] | 2078 |
| 3300-0260 | Door roll up short (up to 45 in.) with painted finish Hansen. Location(s): [#LOC] | 1867 |
| 3300-0261 | Door roll up tall (greater than 45 in.) with satin finish Hansen. Location(s): [#LOC]. | 1593 |
| 3300-0262 | Door double vertical hinged painted. Location: B1 Primary door with the D-ring latch shall be positioned to the driver side so the first compartment door can be opened on the primary side which the rear discharge poisitioned to the officer side on rear also in use on scene. | 917 |
| 3300-0263 | Door roll up short (up to 45 in.) with satin finish Hansen. Location(s): [#LOC]. | 1003 |
| 3300-0264 | Door double 3-point vertical hinged w/dual rotary latches. Note exterior D-Ring latches on primary and secondary doors.- painted. Location(s): [#LOC]. | 2390 |
| 3300-0265 | Stainless steel tall doors double 3-point vertical hinged unpainted. Location(s): [#LOC]. | 1341 |
| 3300-0269 | All side body double exterior doors shall have a 4.5" high stainless steel hasp installed to secure doors in case of door latching mechanism failure. This shall include an area to hang a carabineer with a safety cable (included). | 583 |
| 3300-0270 | Stainless steel lift bar upgrade ROM roll-up door (EA). | 55 |
| 3300-0271 | Door roll up short (up to 45") with painted finish ROM. Location(s): B1. SPECIAL PAINT INSTRUCTION: This door will be painted job color RED. | 1566 |
| 3300-0272 | Door to be notched for 3" DJ hose. Notch to be 8.5" W x 3.75" H. Location: top of B1 officer side door. | 330 |
| 3300-0273 | Tri-Mark door latch IPO standard quarter turn latch. Location(s): [#LOC]. | 89 |
| 3300-0274 | Additional roll up door stop latches (PR) shall be mounted at a raised location aligned just above the dump. The raised latches/hooks shall not be included as part the door ajar circuit. Location(s): just above the dump for the door to be at the top of the dump. | 81 |
| 3305-0000 | Diamond plate generator cover. | 1111 |
| 3305-0002 | Bi-Fold diamond plate cover for the crosslay area. Includes applicable grab handles and (2) hold downs. | 973 |
| 3305-0003 | Single diamond plate cover for the crosslay area. Includes applicable grab handle(s) and (2) hold downs. | 659 |
| 3305-0006 | All hand rails (as applicable) are to have a rubber insert. Includes cab (N/A on commercial chassis) pump module and body. | 1967 |
| 3305-0007 | Vinyl [#COL] hose bed cover with attached rear flap(s). | 949 |
| 3305-0008 | Vinyl [#COL] crosslay cover with attached side flaps. | 334 |
| 3305-0009 | Compartment underbody with slide-out tray.(**Obsolete** See Sales code 3380-0078) Includes drop down front door with push button latch(es). [#LOC] | 2113 |
| 3305-0010 | Compartment underbody. Includes drop down front door with push-button latches. Locate [#LOC]. | 1373 |

| Item No. | Description | |
|---|---|---|
| 3305-0011 | (2) piece aluminum hose bed cover with smooth bottom plate. Includes center hose bed divider with notched rear (as applicable) fill tower(s) access door(s) with handles (as applicable) gas shocks positive hold opens/hold closed at rear (2) grab handles front and (2) hand rails rear. | 3662 |
| 3305-0012 | (4) piece aluminum hosebed cover. Includes center hosebed divider with notched rear fill tower(s) access door(s) with handles (as applicable) (2) gas shocks positive hold-opens/hold-closed at center and at the rear (6) grab handles- (4) fwd cover and (2) fwd area of rear cover with (2) handrails on rear cover. | 6538 |
| 3305-0013 | (2) piece aluminum hosebed cover. Includes dividerless cross structure fill tower(s) access door(s) and handles (as applicable) (2) gas shocks positive hold-opens/hold-closed at the rear (2) grab handles (fwd) and (2) handrails (rear). | 3784 |
| 3305-0014 | (4) piece aluminum hosebed cover. Includes divider-less cross structure fill tower(s) access door(s) and handles (as applicable) (2) gas shocks positive hold-opens/hold-closed at center and at the rear (6) grab handles- (4) fwd cover and (2) fwd area of rear cover with (2) handrails rear of each cover. | 6871 |
| 3305-0015 | Vinyl [#COL] speedlay front cover. | 263 |
| 3305-0016 | Vinyl [#COL] speedlay side covers. | 223 |
| 3305-0017 | Nylon black strap on running board suction tray (EA). Location: [#LOC]. | 88 |
| 3305-0021 | Vinyl [#COL] hose bed cover with side bungee cords and attached rear flap(s). | 1320 |
| 3305-0022 | Vinyl rear cover for diamond plate hose bed cover. Color: [#COL]. | 295 |
| 3305-0023 | Nylon black cargo net at rear of diamond plate or vinyl hose bed cover or similar. | 618 |
| 3305-0024 | Vinyl [#COL] side covers for diamond plate crosslay cover. | 209 |
| 3305-0025 | Nylon black cargo net on sides for crosslay cover. | 247 |
| 3305-0026 | Nylon black cargo net on front of speedlay. | 391 |
| 3305-0027 | Nylon black cargo net on sides of speedlay. | 287 |
| 3305-0028 | Vinyl [#COL] cover for running board suction tray. Location: [#LOC]. | 209 |
| 3305-0029 | Nylon black strap on running board suction tray (EA). For use with rolled hose. Location: [#LOC] | 101 |
| 3305-0031 | (4) piece aluminum low profile dividerless hosebed cover.The hosebed cover to include gas shocks low pro-file positive hold opens at rear (2) grab handles- frt and (2) handrails -rear. | 5093 |
| 3305-0032 | Cover for side ladder tunnel. To include mounting bracket over upper ladders in pump module and black vinyl cover. Cover to be removable for access to pump area. | 444 |
| 3305-0033 | Vinyl access cover for fill tower(s). | 219 |
| 3305-0034 | Vinyl [#COL] hose bed cover without attached rear flap(s). Requires rear cover option. | 804 |
| 3305-0035 | Diamond plate hosebed deflector. Located at front of hosebed area with angled front edge. To be hinged along forward edge with "T" style hold-downs. To cover all fill towers. The NFPA hosebed light (as applicable) to be located on trailing edge. | 561 |
| 3305-0036 | TM control panel [#COL] vinyl cover. Includes lower twist locks and velcro front side and top securing. | 439 |
| 3305-0037 | Diamond plate generator cover with expanded metal on top and all (4) sides. | 1111 |
| 3305-0038 | Vinyl [#COL] crosslay cover top only. | 284 |
| 3305-0039 | Diamond plate speedlay cover. Includes fixed rear portion on rear of module (over backboard storage area if applicable) and hold-open with grab handles on forward area. | 715 |
| 3305-0040 | Nylon black strap with clip release on running board suction tray (EA). Location: [#LOC] | 156 |
| 3305-0041 | Vinyl [#COL] hosebed cover with side twist locks and bungee cord attached rear flap(s). | 1320 |
| 3305-0044 | Hinged bustin grating cover each side of dunnage pan. Includes permanent mount bustin grating cover over center of dunnage pan. Diamond plate cover to be attached over officer side mounted bustin grating. | 1156 |
| 3305-0045 | Diamond Plate Storage Pan Cover. Includes (1) grab handle and (2) hold downs. Hinge to the front of the storage pan. | 921 |
| 3305-0048 | Diamond plate cord reel cover. Includes grab handle and hold downs. Hinge to the front of the storage pan. Includes divider wall to isolate cord reel in pan. | 685 |
| 3305-0049 | (4) piece aluminum low profile hosebed cover. Includes center hosebed divider with notched rear fill tower(s) access door(s) and handles (as applicable) (2) gas shocks low profile positive hold-opens/hold-closed at center and at the rear (6) grab handles- (4) fwd cover and (2) fwd area of rear cover with (2) handrails rear of each cover. | 6930 |
| 3305-0050 | Hosebed cover fill tower support brackets. Includes two (2) "C" shaped plates mounted to the hosebed on either side of the fill tower. Plates are to be as high as the hosebed sides. Includes adding of twist locks to each corner of the hosebed cover tower flap (in addition to the velcro already provided). | 512 |
| 3305-0052 | Vinyl [#COL] hose bed cover with side snaps and bungee cord attached rear flap(s). | 1320 |
| 3305-0053 | Diamond plate cover for the dunnage pan area. Includes permanently mounted panel under ladder rack and hinged panel over remaining pan. Includes (2) butterfly latches to hold closed. Hinge to the rear of dunnage pan. | 813 |

| Item No. | Description | |
|---|---|---|
| 3305-0054 | (3) piece aluminum hosebed cover. Includes cover divider/walkway partion divider and (3) sized as required covers main positive hold open/closed bracket to forward area of hosebed and remaining middle and rear covers to be pinable fill tower(s) access door(s) and handles (as applicable) (1) gas shock each cover to have (2) grab handles located on the inboard side (accessable from the walkway) and a nylon strap attached to each cover for easier closing (attach strap to cover divider so it can be reached at any time while the cover is open) (accessable from the walkway). | 5946 |
| 3305-0057 | ROM roll-up hose bed cover with satin finish. Inlcudes a momentary switch located [#LOC] and to be easily accessible from the ground. Includes enclosing the operator housing. | 7212 |
| 3305-0058 | Nylon black cargo cover for running board suction tray. Location: [#LOC]. | 391 |
| 3305-0059 | Customer supplied material for covers. Vinyl Lime Green hosebed cover with attached rear flap and crosslay cover with attached side flaps. | 1594 |
| 3305-0060 | Diamond plate cover for running board suction tray(s). Includes push-button latches and gator grip. Location(s): [#LOC]. | 414 |
| 3305-0061 | Vinyl black hose bed covers with side twist locks and bungee cord attached rear flap(s). Hose bed to have (1) cover each side of hose bed walkway twist-locks down each side and top of covers. | 2638 |
| 3305-0064 | Nylon black strap with aluminum quick-release buckle for hose tray. Strap to attach to side walls of tray down low as applicable. Location: [#LOC]. | 128 |
| 3305-0065 | Compartment underbody with slide-out tray. Includes drop down front door with D-ring latch(es). [#LOC] | 2438 |
| 3305-0068 | Vinyl [#COL] hosebed cover with attached rear flap(s). Cover to have snaps and velcro along front (no awning attachment) and sides. No twist locks. The rear bungees to be tie-in versus sown (use ilets sized to secure a looped and tied bungee). Bungee to be easily removed and replaced (by fire department) in field. | 1607 |
| 3305-0069 | Diamond plate speedlay cover. Includes fixed rear portion on rear of module (over backboard storage area if applicable) and hold-open with grab handles on rearward area. | 715 |
| 3305-0070 | Diamond plate portable pump cover. | 1353 |
| 3305-0076 | The mechanical attachments of the side crosslay and rear hosebed covers to be small clip (black) IPO bungees. | 441 |
| 3305-0078 | Vinyl [#COL] hosebed cover with attached rear flap(s). Includes mechanical attachements at the forward body the four corners of the main and rear body/pump module and velcro along the sides. | 1161 |
| 3305-0080 | Diamond plate cover for running board suction tray(s). Includes push-button latches and gator grip. Includes cords to prevent covers from dropping to the ground when removed. Location(s): [#LOC]. | 456 |
| 3305-0082 | (4) piece aluminum hose bed cover. Includes center hose bed divider with notched rear fill tower(s) access door(s) and handles (as applicable) (2) gas shocks positive hold-opens/hold-closed at center and at the rear (6) grab handles- (4) fwd cover and (2) fwd area of rear cover with (2) hand rails on rear cover. A landing platform (sized and positioned as required with overall rear end configuration) with embossed diamond plate surface will be centrally located at the upper rear of the apparatus to assist with hose bed cover operations. | 3418 |
| 3305-0083 | (4) piece aluminum hose bed cover. Includes dividerless cross structure fill tower(s) access door(s) and handles (as applicable) (2) gas shocks positive hold-opens/hold-closed at center and at the rear (6) grab handles- (4) fwd cover and (2) fwd area of rear cover with (2) hand rails on rear cover. A landing platform (sized and positioned as required with overall rear end configuration) with embossed diamond plate surface will be centrally located at the upper rear of the apparatus to assist with hose bed cover operations. | 4667 |
| 3305-0086 | (4) piece aluminum hosebed cover for use with rear mount body. Includes center hosebed divider with notched rear fill tower(s) access door(s) (as applicable) (2) gas shocks positive hold-opens/hold-closed at center and at the rear (6) grab handles- (4) fwd cover and (2) fwd area of rear cover with (2) handrails on rear cover. A landing platform (sized and positioned as required with overall rearend configuration) with embossed diamond plate surface will be centrally located at the upper rear of the apparatus to assist with hosebed cover operations. | 3754 |
| 3305-0087 | (4) piece aluminum hosebed cover for use with rear mount body. Includes divider-less cross structure fill tower(s) access door(s) and handles (as applicable) (4) gas shocks positive hold-opens/hold-closed at center and at the rear (6) grab handles- (4) fwd cover and (2) fwd area of rear cover with (2) handrails on rear cover. A landing platform (sized and positioned as required with overall rearend configuration) with embossed diamond plate surface will be centrally located at the upper rear of the apparatus to assit with hosebed cover operations. | 5573 |
| 3305-0088 | (4) piece aluminum hosebed cover with smooth bottom plate. Includes center hosebed divider with notched rear fill tower(s) access door(s) and handles (as applicable) (2) gas shocks positive hold-opens/hold-closed at center and at the rear (6) grab handles- (4) fwd cover and (2) fwd area of rear cover with (2) handrails on rear cover. | 4909 |

| Item No. | Description | |
|---|---|---|
| 3305-0089 | (4) piece aluminum hose bed cover with smooth bottom plate. Includes dividerless cross structure fill tower(s) access door(s) and handles (as applicable) (2) gas shocks positive hold-opens/hold-closed at center and at the rear (6) grab handles- (4) fwd cover and (2) fwd area of rear cover with (2) hand rails on rear cover. | 4713 |
| 3305-0091 | Additional (2) gas shocks at the rear of the hosebed cover. | 133 |
| 3305-0092 | Additional positive hold-opens/hold-closed at the front of the hosebed cover. Requires front compartment face folding steps to access pins. | 328 |
| 3305-0093 | Vinyl fire retardent [#COL] hosebed cover with twist locks fasteners and bungee cord attached rear flap(s). | 1531 |
| 3305-0094 | Fire Retardent Vinyl [#COL] crosslay cover with attached side flaps. | 664 |
| 3305-0095 | Booster Reel Cover. Cover to have roll-top access door with handle and held close with rubber latch. | 1926 |
| 3305-0099 | Bolt-on aluminum cover for ladder tunnel. To include mounting bracket mounted to underside of dunnage storage pan and or other module/body components. Cover to be removable for access to ladder tunnel area. | 746 |
| 3305-0101 | (4) piece aluminum hosebed cover. Includes center hosebed divider with notched rear fill tower(s) access door(s) with handles (as applicable) (4) gas shocks positive hold-opens/hold-closed at center and at the rear (6) grab handles- (4) fwd cover and (2) fwd area of rear cover with (2) handrails on rear cover. Includes center bracing between forward and rearward covers for mounting of gas shocks for rearward covers. | 3663 |
| 3305-0102 | Heavy duty Vinyl Black wheel well cover located in compartments L2 and R2. Cover to be full width drop down protector to prevent damage to painted surfaces below the wheel well compartments. | 664 |
| 3305-0118 | Vinyl [#COL] [#LOC] storage tunnel front cover. | 263 |
| 3305-0122 | Vinyl [#COL] upper hose storage cover with attached rear flap located above the ladder tunnel. | 334 |
| 3305-0123 | Powered (2) piece aluminum hose bed cover. Includes center hose bed divider with notched rear fill tower(s) access door(s) with handles (as applicable) (2) electric actuators (2) grab handles forward area of cover with (2) hand rails on rearward area of cover. Partition at front of hose bed to cover electric actuators (approx 4" loss in hose bed length). Includes controls through VMUX system (if so equipped): (2) momentary controls - (1) left cover and (1) right cover. | 6658 |
| 3305-0124 | Vinyl [#COL] crosslay cover with attached side flaps. Cover to have velcro on the top IPO snaps. | 334 |
| 3305-0125 | (2) piece aluminum hose bed cover. Includes center hose bed divider with notched rear fill tower(s) access door(s) and handles (as applicable) (2) gas shocks positive hold-opens/hold-closed at rear (2) grab handles on fwd area of cover with (2) hand rails on rear of cover. A landing platform (sized and positioned as required with overall rear end configuration) with embossed diamond plate surface will be centrally located at the upper rear of the apparatus to assist with hose bed cover operations. | 3418 |
| 3305-0128 | Vinyl rear cover for diamond plate hosebed cover. Cover to be attached with snaps. Color: [#COL]. | 415 |
| 3305-0130 | Vinyl [#COL] crosslay cover with attached side flaps. Cover to have snaps and velcro on the top. No twist locks. The side bungees to be tie-in versus sown (use ilets sized to secure a looped and tied bungee). Bungee to be easily removed and replaced (by fire department) in field. | 565 |
| 3305-0136 | (2) piece aluminum hosebed cover. Includes center hosebed divider with NO notched rear fill tower(s) access door(s) and handles (as applicable) (2) gas shocks positive hold-opens/hold-closed at rear (2) grab handles on fwd area of cover with (2) handrails on rear of cover. A FULL width step (sized and positioned as required with overall rearend configuration) with embossed diamond plate surface will be located at the upper rear of the apparatus to assist with hosebed cover/hose loading operations. | 4048 |
| 3305-0137 | Powered (2) piece aluminum hosebed cover. Includes center hosebed divider with notched rear fill tower(s) access door(s) and handles (as applicable) (2) eletric actuators (2) grab handles forward area of cover with (2) handrails on rearward area of cover. Partition at front of hosebed to cover electric actuators (approx 4" loss in hosebed length). Includes control panel on officer side rear compartment face with (3) momentary switches: (1) master on/off (1) left cover and (1) right cover. | 7809 |
| 3305-0138 | Stokes Basket storage box. Located on top of the driver side hosebed cover. To hold (1) stokes basket with access from a horizontally hinged lift-up diamond plate door with a push-button latch. | 959 |
| 3305-0141 | Diamond plate hosebed deflector located at front of hosebed area with angled front edge. To be hinged along forward edge with "T" style hold-downs. | 533 |
| 3305-0142 | Vinyl red side covers for diamond plate crosslay cover. Covers to attach to the DP cover with snaps. The lower corners to have bungee cords. Cords are to be tie-in versus sown. Flaps to have eyelets sized to secure individual looped and tied bungees. Cords to be easily removed and replaced (by fire department) in field. | 341 |
| 3305-0143 | Vinyl rear cover for diamond plate hosebed cover. Cover to attach to the DP cover with snaps. The lower edge to have bungee cords. Cords are to be tie-in versus sown. Flap to have eyelets sized to secure individual looped and tied bungees. Cords to be easily removed and replaced (by fire department) in field. Color: Red | 432 |

| Item No. | Description | |
|---|---|---|
| 3305-0144 | (4) piece aluminum hosebed cover. Includes center hosebed divider with notched rear fill tower(s) access door(s) and handles (as applicable) (2) gas shocks positive hold-opens/hold-closed at center and at the rear (8) handrails - (4) forward cover and (4) rearward cover. The enhanced extended landing area(s) will be used to assist with hosebed cover operations. For use with Enhanced Extended Rescue Pumper only. | 3710 |
| 3305-0145 | Zico ladder control switching wiring cover. | 127 |
| 3305-0147 | Nylon yellow strap with aluminum quick-release buckle for hose tray. Strap to attach to side walls of tray down low as applicable. Location: [#LOC]. | 128 |
| 3305-0149 | Nylon yellow cargo net on sides for crosslay cover. Cover to have snaps in place of bungees. | 347 |
| 3305-0150 | Nylon yellow cargo net at rear of diamond plate or vinyl hosebed cover. Cover to have snaps in place of bungees. | 662 |
| 3305-0157 | Nylon yellow cargo net on sides of speedlay. Covers to have snaps in place of bungees. | 334 |
| 3305-0158 | Diamond Plate Booster Reel Cover. Includes (1) grab handle and (2) hold downs. Hinge towards the front of the storage pan. Includes partitions located around booster reel. | 1672 |
| 3305-0159 | Hosebed cover hold open devices to be thru bolted on side of 3x3 hosebed side extrusions. | 128 |
| 3305-0163 | Powered (2) piece aluminum hosebed cover with smooth bottom plate. Includes center hosebed divider with notched rear fill tower(s) access door(s) and handles (as applicable) (2) electric actuators (2) grab handles forward area of cover with (2) handrails on rearward area of cover. Partition at front of hosebed to cover electric actuators (approx 4" loss in hosebed length). Includes control panel on driver side rear body with (3) momentary switches: (1) master on/off (1) left cover and (1) right cover. | 6657 |
| 3305-0164 | Nylon black cargo net hosebed cover with attached rear flap(s). | 1234 |
| 3305-0166 | Nylon black strap with aluminum quick-release buckle for hose tray. Strap to attach to side walls of tray down low as applicable. For use with rolled hose. Location: [#LOC]. | 140 |
| 3305-0168 | Vinyl [#COL] hose bed cover with side bungee cords without attached rear flap(s). Requires rear cover option. | 1176 |
| 3305-0169 | Diamond plate cover for the dunnage pan area. Includes (2) butterfly latches to hold closed. Hinge to the rear of dunnage pan. | 813 |
| 3305-0170 | Spring hold down for hose tray. Spring to attach to side wall of tray with scuff plate on pump panel. Location: [#LOC]. | 169 |
| 3305-0171 | Diamond plate speedlay cover (3/16" diamond plate). Includes fixed rear portion on rear of module (over backboard storage area if applicable) and hold-open with grab handles on rearward area. | 747 |
| 3305-0172 | Diamond plate booster reel cover with open sides for hose deployment. | 990 |
| 3305-0174 | Single diamond plate cover for the crosslay area. Includes applicable grab handle(s) and (2) hold downs. Cover to be embossed diamond plate. | 726 |
| 3305-0175 | Vinyl fire retardent [#COL] hose bed cover with attached rear flap(s). | 1185 |
| 3305-0176 | Vinyl fire retardent [#COL] side covers for diamond plate crosslay cover. | 261 |
| 3305-0177 | Vinyl fire retardent [#COL] cover for running board suction tray. Location: [#LOC]. | 261 |
| 3305-0178 | One piece vinyl fire retardent cover for top mount pump panel opening. Top of vinyl fire retardent cover outboard corners to have twist locks with velcro around permetier. Color to be [#COL]. | 914 |
| 3305-0179 | (2) piece aluminum hosebed cover. Includes divider-less cross structure fill tower(s) access door(s) and handles (as applicable) (2) gas shocks positive hold-opens/hold-closed at rear (2) grab handles on fwd area of cover with (2) handrails on rear of cover. A landing platform (sized and positioned as required with overall rearend configuration) with embossed diamond plate surface will be centrally located at the upper rear of the apparatus to assist with hosebed cover operations. | 4333 |
| 3305-0180 | Vinyl [#COL] hose bed cover with side bungee cords and attached rear flap(s). Includes large pull tabs to ease securing cover while wearing gloves. | 1441 |
| 3305-0181 | Vinyl [#COL] hosebed cover with side twist locks with Velcro in between the twist locks and bungee cord attached rear flap(s). | 1580 |
| 3305-0182 | Hold open retaining pin for aluminum crosslay (single or bi-fold) cover. Locate as required based off options on module. | 166 |
| 3305-0183 | Vinyl [#COL] crosslay cover with attached side flaps with bungee cord. | 416 |
| 3305-0184 | Vinyl [#COL] side covers for diamond plate crosslay cover. Includes large pull tabs to ease securing end flaps while wearing gloves. | 209 |
| 3305-0185 | Nylon red cargo cover for running board suction tray. Location: [#LOC]. | 421 |
| 3305-0186 | Nylon red cargo net on sides for crosslay cover. | 275 |
| 3305-0187 | Nylon red cargo net at rear of diamond plate or vinyl hose bed cover. | 654 |
| 3305-0188 | Nylon black strap with footman loops and Velcro closure to secure hose. Location: [#LOC]. | 101 |
| 3305-0189 | The rear flap(s) of the hosebed cover shall be upgraded to add weight to the bottom of the rear vertical flap(s). | 590 |

| Item No. | Description | |
|---|---|---|
| 3305-0190 | (4) piece aluminum hosebed cover. Includes off center hosebed divider located 8" left of center (NOT CENTERED) with notched rear fill tower(s) access door(s) and handles (as applicable) (4) gas shocks positive hold-opens/hold-closed at center and at the rear (6) grab handles- (4) fwd cover and (2) fwd area of rear cover with (2) handrails on rear cover. Includes center bracing between forward and rearward covers for mounting of gas shocks for rearward covers. | 4256 |
| 3305-0191 | Vinyl rear cover for diamond plate hose bed cover using California Type 3 straps IPOS. Color: [#COL]. | 449 |
| 3305-0193 | Hold open device(s) shall be provided. Rubber plunger type hold downs(s) shall hold the aluminum crosslay cover(s) (single or bi-fold) in the open position. | 230 |
| 3305-0194 | Bi-Fold diamond plate cover for the crosslay area. Includes applicable grab handles (2) hold downs and magnetic door ajar switch(s). | 1107 |
| 3305-0195 | (4) piece aluminum hose bed cover. Includes divider-less cross structure fill tower(s) access door(s) and handles (as applicable) (2) gas shocks positive hold-opens/hold-closed at center and at the rear (6) grab handles- (4) fwd cover and (2) fwd area of rear cover with (2) hand rails on rear cover. A landing platform (10" in depth the width shall be sized and positioned as required with overall rear end configuration) with embossed diamond plate surface will be centrally located at the upper rear of the apparatus to assist with hose bed cover operations. | 4667 |
| 3305-0196 | Diamond plate cover for the dunnage pan area. Includes (2) butterfly latches to hold closed and (1) grab handle mounted between butterfly latches. Hinge to the front of dunnage pan. | 813 |
| 3305-0197 | Hose bed deflector. The diamond plate deflector shall be bolted in place on the front of hose bed area with an angled top edge to shield rain and wind from the frontal area of the hose bed. | 561 |
| 3305-0199 | Double diamond plate cover for each outboard hose storage area on the Low Hosebed body. Includes applicable grab handle(s) and (2) hold downs on each cover. Covers to be embossed diamond plate and hinged outboard. | 1658 |
| 3305-0200 | Vinyl [#COL] end covers for upper outboard hose storage of the hosebed. | 209 |
| 3305-0201 | Bi-Fold smooth plate cover for the crosslay area. Includes applicable grab handles and (2) hold downs. The cover to be painted black durabak. | 1168 |
| 3305-0202 | (4) Piece aluminum smooth plate with black Scorpion coating (IPOS diamond plate) hosebed cover for use with rear mount body. Includes center hosebed divider with notched rear fill tower(s) access door(s) (as applicable) (2) gas shocks positive hold-opens/hold-closed at center and at the rear (6) grab handles- (4) fwd cover and (2) fwd area of rear cover with (2) handrails on rear cover. A landing platform (sized and positioned as required with overall rear end configuration) with aluminum smooth plate with black Scorpion coating (IPOS diamond plate) surface will be centrally located at the upper rear of the apparatus to assist with hosebed cover operations. | 4233 |
| 3305-0203 | Nylon black strap with aluminum quick-release buckle for tailboard hose tray(s). Strap to attach to side walls of tray down low as applicable. | 128 |
| 3305-0204 | (4) piece aluminum hosebed cover for use with rear mount body. Includes center hosebed divider with notched rear fill tower(s) access door(s) (as applicable) (2) gas shocks positive hold-opens/hold-closed at center and at the rear (6) grab handles- (4) fwd cover and (2) fwd area of rear cover with (2) handrails on rear cover. A landing platform (sized and positioned as required with overall rearend configuration) with embossed diamond plate and gator grip surface will be centrally located at the upper rear of the apparatus to assist with hosebed cover operations. | 3754 |
| 3305-0205 | Vinyl [#COL] side covers for diamond plate crosslay cover. Covers to attach to the DP cover with snaps. The lower corners shall be secured in place using California type straps (2) each side IPOS. These straps shall function to allow each strap to be looped around the horizontal crosslay roller on each side as part of the attach system. | 422 |
| 3305-0206 | Vinyl [#COL] hose bed cover using Nitrogen/Oxygen type straps (2) attach positions each side (4) total to secure the rear flap(s) IPOS. The upper straps shall be sewn in place leaving the ratchet clamp approximately half way or mid height of the rear flap(s). The bottom straps shall be fastened to a strap tie down mounted slightly above the horizontal handrail in line with the sewn in straps above (4) total top and (4) total bottom. The bottom straps shall feed directly above to the ratchet clamps (sewn in) as part of the attach/securing system. | 1800 |
| 3305-0207 | Vinyl [#COL] hose bed cover with side bungee cords for main hose bed storage area. Seperate cover w/snaps and attached rear flap for hose chute(s). Aerial application only. | 1320 |
| 3305-0208 | Cargo net for inside compartment for containing cribbing in compartment when door is opened. Net to permanently fasten on rearward wall just inside door opening and fasten with buckle straps on forward wall just inside door opening. Cargo netting will be 3" x 3" squares. Location: [#LOC]. | 908 |
| 3305-0209 | Smooth plate speedlay cover painted gray durabak. Includes fixed rear portion on rear of module (over backboard storage area if applicable) and hold-open with grab handles on rearward area. | 915 |
| 3305-0210 | Diamond plate cover for the dunnage pan area. Includes permanently mounted panel under ladder rack and hinged panel over remaining pan. Includes (2) butterfly latches to hold closed to include gas spring(s) as hold open device. Hinge to the rear of dunnage pan. | 849 |

| Item No. | Description | |
|---|---|---|
| 3305-0211 | (2) piece aluminum hosebed cover. Includes center hosebed divider with NO notched rear fill tower(s) access door(s) and handles (as applicable) (2) gas shocks positive hold-opens/hold-closed at rear (2) grab handles on fwd area of cover with (2) handrails on rear of cover. | 4048 |
| 3305-0212 | Vinyl fire retardent [#COL] hosebed cover with twist locks fasteners and bungee cord attached rear flap(s). Cover to be partial hosebed cover leaving hosebed walkway area uncovered. To extend full length of the hosebed from roof top compartment on the side to divider against walkway in the middle and to hosebed storage pan rearward mounting flange at the front. | 1531 |
| 3305-0213 | (4) Piece aluminum hose bed cover. Includes divider-less cross structure fill tower(s) access door(s) and handles (as applicable) (2) gas shocks custom positive hold-open devices at the rear and separate hold closed devices (see photos in file) (6) grab handles- (4) fwd cover and (2) fwd area of rear cover with (2) 18" hand rails on rear cover mounted inboard not to interfere with upper warning lights. | 4765 |
| 3305-0214 | Nylon black cargo net at rear of diamond plate or vinyl hose bed cover. Notched for hosebed storage compartment(s) and door(s) as required. | 618 |
| 3305-0215 | Vinyl [#COL] hose bed cover with attached rear flap(s). Cover to have snaps and velcro along front (NO awning attachment) and velcro along sides. No twist locks. | 949 |
| 3305-0217 | Vinyl [#COL] hosebed cover with attached rear flap(s). Cover to have bungees on sides ipo velcro. Bungee to be easily removed and replaced (by fire department) in field. | 1607 |
| 3305-0218 | (4) piece aluminum smooth plate hosebed cover (flat profile with no pitch) painted with Durabak black coating. Includes center hosebed divider with notched rear notch for boom support fill tower(s) access door(s) and handles (as applicable) (2) gas shocks positive hold-opens/hold-closed at center and at the rear (6) grab handles- (4) fwd cover and (2) fwd area of rear cover with (2) handrails rear of each cover. The enhanced extended landing area(s) will be used to assist with hosebed cover operations. For 50' Teleboom with Enhanced Extended Rescue. | 7901 |
| 3305-0219 | (2) piece light weight aluminum hose bed cover. Includes center hose bed divider with notched rear (as applicable) fill tower(s) access door(s) and handles (as applicable) gas shocks positive hold opens/hold closed at rear (2) grab handles front and (2) hand rails rear. | 3341 |
| 3305-0220 | (2) piece light weight aluminum hose bed cover. Includes dividerless cross structure fill tower(s) access door(s) and handles (as applicable) (2) gas shocks positive hold-opens/hold-closed at the rear (2) grab handles (fwd) and (2) hand rails (rear). | 3341 |
| 3305-0222 | Vinyl rear cover for diamond plate hosebed cover. Cover to be attached with bungee cords at all attachment positions. Color: [#COL]. | 419 |
| 3305-0223 | Nylon black cargo net on sides of speedlay. Cover to be attached with bungee cords at all attachment positions. | 359 |
| 3305-0227 | Vinyl fire retardant rear cover for diamond plate hose bed cover. Color: [#COL]. | 323 |
| 3305-0228 | Fire Retardent Vinyl [#COL] side covers for diamond plate crosslay cover. | 417 |
| 3305-0231 | Powered (2) piece aluminum hosebed cover with notch built into the officer side rear corner (to miss monitor are mounted). Includes center hosebed divider with notched rear fill tower(s) access door(s) and handles (as applicable) (2) electric actuators (2) grab handles forward area of cover with (2) handrails on rearward area of cover. Partition at front of hosebed to cover electric actuators (approx 4" loss in hosebed length). Includes control panel on left rear of body above taillights with (3) momentary switches: (1) master on/off (1) left cover and (1) right cover. | 7620 |
| 3305-0234 | Powered (2) piece aluminum hose bed cover. Includes center hose bed divider with notched rear fill tower(s) access door(s) and handles (as applicable) (2) electric actuators (2) grab handles forward area of cover with (2) hand rails on rearward area of cover. A landing platform (sized and positioned as required with overall rear end configuration) with embossed diamond plate surface will be centrally located at the upper rear of the apparatus to assist with hose bed cover operations. Partition at front of hose bed to cover electric actuators (approx 4" loss in hose bed length). Includes (2) momentary controls - (1) left cover and (1) right cover. | 6907 |
| 3305-0238 | Vinyl [#COL] hose bed covers with attached rear flaps. Two Seperate covers for bi-level hose bed sides stepped to clear overhead rack assembly. | 1139 |
| 3305-0241 | Bi-fold style diamond plate cover for running board suction tray(s) hinged outboard from pump panels. Includes butterfly latches and gator grip. Location(s): [#LOC]. | 456 |
| 3305-0242 | Bolt-on aluminum cover for the forward end of the driver side storage tunnel. To include mounting bracket mounted to underside of dunnage storage pan and or other module/body components as necessary. Cover to be removable for access to tunnel area. | 428 |
| 3305-0243 | Vinyl [#COL] crosslay cover with attached side flaps. Includes side snaps. | 415 |
| 3305-0244 | Cargo net: Black nylon with 2 inch openings mechanical type hold downs and notch to accommodate pan mounted options if applicable. Locate in upper eMAX forward module roof pan area. | 1372 |
| 3305-0246 | Smooth plate aluminum rear covers for the application of applicable chevrons mounted on the ends of the top outboard hose bed storage areas. Includes vertical hinge each side and a non-locking D-ring latch. Doors to be wired to door ajar circuit. Storage areas to be open to the top and shall be used for misc. equipment to be added/secured as applicable to NFPA by customer/dealer. Not identified to be used as loose hose storage. | 884 |

| Item No. | Description | |
|---|---|---|
| 3305-0247 | Diamond plate vertically hinged door each side of the 2.5" crosslay hinge rearward. Includes thumb latch and wiring for door ajar switch. | 411 |
| 3305-0248 | (2) piece aluminum hose bed cover. Includes dividerless cross structure fill tower(s) access door(s) and handles (as applicable) (2) gas shocks positive hold-opens/hold-closed at the rear (2) grab handles (fwd) (2) grab handles rear and (2) hand rails (rearend). | 4771 |
| 3305-0249 | The mechanical attachments of the side speedlay and rear hosebed covers to be small clip (black) IPO bungees. | 429 |
| 3305-0250 | Diamond plate speedlay cover painted gray Zolatone. Includes fixed rear portion on rear of module (over backboard storage area if applicable) and hold-open with grab handles on rearward area. | 959 |
| 3305-0251 | Powered (2) piece aluminum smooth plate hosebed cover and painted black Durabak. Includes center hose bed divider with notched rear fill tower(s) access door(s) and handles (as applicable) (2) electric actuators (2) grab handles forward area of cover with (2) hand rails on rearward area of cover. Partition at front of hose bed to cover electric actuators (approx 4" loss in hose bed length). Includes controls through VMUX system (if so equipped): (2) momentary controls - (1) left cover and (1) right cover. | 8322 |
| 3305-0252 | Nylon black cargo net hosebed cover with side bungee cords and attached rear flap(s). Rear Cover notched for hosebed storage compartment(s) and door(s) as required. | 1750 |
| 3305-0253 | One piece vinyl cover for top mount pump panel opening. Top of vinyl cover outboard corners to have twist locks with velcro around permetier. Color to be [#COL]. | 914 |
| 3305-0254 | Wiring covers in roof top compartments. | 381 |
| 3305-0259 | Nylon black cargo net at rear of diamond plate or vinyl hose bed cover w/(2) aluminum quick release buckles. | 867 |
| 3305-0260 | Nylon black cargo net end flaps w/(2) aluminum quick release buckles on each side for crosslay cover. | 617 |
| 3305-0263 | Removable diamond plate cover for the crosslay area. Includes applicable grab handles and aluminum fabricated brackets with safety pins for hold downs. | 973 |
| 3305-0264 | Diamond plate cover for running board suction tray(s). Includes butterfly latches and gator grip. Includes cords to prevent covers from dropping to the ground when removed. Location(s): [#LOC]. | 456 |
| 3305-0265 | Vinyl rear cover for diamond plate hose bed cover. The top of the cover shall be mechanically attached to the rear hose bed cover extrusion with over lapping flaps in the center secured with velcro. The lower portion of the cover shall be secured in place with heavy duty nylon straps. The lower portion fasteners shall be mounted at pick up. Color: Red. | 432 |
| 3305-0267 | (4) piece aluminum hose bed cover. Includes divider-less cross structure fill tower(s) access door(s) and handles (as applicable) (4) 153 lb gas shocks positive hold-opens/hold-closed at center and at the rear (6) grab handles- (4) fwd cover and (2) fwd area of rear cover with (2) hand rails on rear cover. A landing platform (10" in depth the width shall be sized and positioned as required with overall rear end configuration) with embossed diamond plate surface will be centrally located at the upper rear of the apparatus to assist with hose bed cover operations. | 4758 |
| 3305-0268 | Diamond plate cover for the dunnage pan area. Includes (2) butterfly latches to hold closed and (2) gas shocks as hold open device. Cover to hinge to the rear of dunnage pan and open a full 90 deg. | 849 |
| 3305-0271 | Nylon black cargo net end cover for driver side upper outboard hose storage of the hosebed. | 159 |
| 3305-0274 | Vinyl black hose bed cover with attached rear flap on one side only to the top of the hose bed storage compartment. | 949 |
| 3305-0276 | Vinyl red crosslay cover top with attached nylon red cargo net on each side of cover. | 636 |
| 3305-0277 | Vinyl rear cover for diamond plate hose bed cover. Cover shall attach to hard cover optioned and have weighted bottom edge with additional shock cord attaching cords to comply with NFPA current version. Cover shall be split in the center along hard cover center or divider at center of hose bed. D&S custom covers brand NFPA compliant with reflective yellow and red "A" chevrons. | 950 |
| 3305-0278 | The hose bed center divider/support for the hosebed cover shall be offset to meet the hoseload and/or storage requirements. | 185 |
| 3305-0280 | Nylon black strap with aluminum quick-release buckle for hose tray. Location: to be mounted at final inspection. [#LOC]. | 128 |
| 3305-0281 | (4) piece aluminum hose bed cover. Includes center hose bed divider with notched rear fill tower(s) access door(s) and handles (as applicable) (2) gas shocks positive hold-opens/hold-closed at center and at the rear (6) grab handles- (4) fwd cover and (2) fwd area of rear cover with (2) hand rails on rear cover. Requires an Intermediate rear step located at the upper rear of the apparatus to assist with hose bed cover operations. | 3418 |
| 3305-0282 | Vinyl black hose bed cover with nylon black strap with footman loops and Velcro closure to secure hosebed cover without attached rear flap(s). Requires rear cover option. | 1176 |
| 3305-0283 | Nylon black cargo net at rear of diamond plate or vinyl hosebed cover. Cover to have nylon black strap with footman loops and Velcro closure to secure hosebed end flap. | 662 |

| Item No. | Description | |
|---|---|---|
| 3305-0284 | Diamond plate hose bed deflector. Aluminum tread plate .25 in thick. Located at front of hosebed area with angled front edge. The NFPA hosebed light (as applicable) to be located on trailing edge and provisions added to secure hose bed vinyl cover along forward edge below deflector. Top of shield to extend upwards approx. 5 in. above hose bed top extrusion and approx. 10.5 in. rearward to trailing edge from front of body. | 336 |
| 3305-0285 | Powered (2) piece aluminum hosebed cover with smooth bottom plate. Includes center hosebed divider with notched rear fill tower(s) access door(s) and handles (as applicable) (2) electric actuators (2) grab handles forward area of cover with (2) handrails on rearward area of cover. Partition at front of hosebed to cover electric actuators (approx 4" loss in hosebed length). Includes control panel [#LOC] with (3) momentary switches: (1) master on/off (1) left cover and (1) right cover. | 6657 |
| 3305-0286 | Cover for side ladder tunnel forward end. Cover shall be fabricated from flat smooth plate aluminum and be easily removable for access to the forward end of the ladder tunnel for clean out. Usable only on body configurations where the ladders do NOT extend into pump module. | 303 |
| 3305-0287 | (4) piece aluminum hosebed cover (flat profile with no pitch). Includes center hosebed divider with notched rear fill tower(s) access door(s) (as applicable) (2) gas shocks positive hold-opens/hold-closed at center and at the rear (6) grab handles- (4) fwd cover and (2) fwd area of rear cover. (2) handrails on back lip of hosebed cover due to overall height restriction. A landing platform (sized and positioned as required with overall rear end configuration) with embossed diamond plate surface will be centrally located at the upper rear of the apparatus to assist with hose bed cover operations. | 5013 |
| 3305-0291 | Nylon red cargo net on sides of speedlay. | 334 |
| 3305-0292 | Removable diamond plate cover for the hydraulic power supply for E-ONE 2 arm ladder rack for use in top side dunnage or storage pan mounting applications. Includes flush access door with thumb latch to inspect or fill hydraulic reservoir. To include NO STEP tags as applicable. | 412 |
| 3305-0293 | (2) piece aluminum smooth platehose bed cover and painted black Durabak.. Includes dividerless cross structure fill tower(s) access door(s) and handles (as applicable) (2) gas shocks positive hold-opens/hold-closed at the rear (2) grab handles (fwd) and (2) hand rails (rear). | 5834 |
| 3305-0294 | Vinyl red cover for fire extinguisher box. Cover to attach to the shelf lip with snaps. The lower corners to have bungee cords. | 341 |
| 3305-0296 | (2) piece aluminum hose bed cover and painted black Durabak with smooth bottom plate. Includes center hose bed divider with notched rear (as applicable) fill tower(s) door(s) and handles (as applicable) gas shocks positive hold opens/hold closed at rear (2) grab handles front and (2) hand rails rear. | 4403 |
| 3305-0297 | Crosslay cover to be a diamond plate three (3) piece cover. Forward and middle covers w/center section below aerial fixed with hinged outside panels above swivel connections. Full width hinged cover over rearward dry lay storage area (hinged forward). Includes applicable grab handles and (4) hold downs. | 1976 |
| 3305-0300 | Nylon black cargo net on sides for crosslay cover. Note: Side flaps are to be interchangeable from side to side. | 355 |
| 3305-0302 | LINE-X package for Pump Module top cover(s): Includes exterior surfaces only on all crosslay/speedlay cover(s) and top surface of backboard storage and deck gun channel as applicable. | 221 |
| 3305-0303 | LINE-X package for aluminum hosebed cover(s): Includes exterior surfaces only on hosebed cover(s) including fabricated hold opens and access door(s) for fill towers etc as applicable. Also includes the rear intermediate step/platform under the hosebed. | 1826 |
| 3305-0304 | Crosslay cover to be a diamond plate three (3) piece cover. Forward crosslay cover (hinged forward) and second crosslay cover (hinged rearward) are each a two piece cover which includes a separate cover for access to swivel connections when the aerial is bedded. One piece cover over rearward dry lay storage area (hinged forward). Includes applicable grab handles and (6) butterfly latches. | 1976 |
| 3305-0305 | Vinyl [#COL] hose bed cover with attached rear flap(s). End flap(s) to have nylon webbing straps with stainless steel spring buckles and footman loops to secure cover closed. | 998 |
| 3305-0306 | Vinyl Black hosebed cover with twist locks fasteners and nylon strap attached rear flap(s). | 996 |
| 3305-0307 | Vinyl [#COL] hose bed cover with attached rear flap(s). Cover to have snaps and velcro along front (NO awning attachment) and velcro along sides. Rear of cover to be attached with snaps (no bungee). | 949 |
| 3305-0308 | R.O.M. power hose bed cover to be supplied with NFPA compliant walk surface option. | 244 |
| 3305-0309 | Vinyl rear cover for ROM power hose bed cover. Color: Black | 485 |
| 3305-0310 | The mechanical attachments of the side crosslays and rear hosebed covers to be small clip (black) IPO bungees. | 429 |
| 3305-0311 | Vinyl [#COL] hose bed cover with side bungee cords and attached rear flap(s). Cover to accommodate main hose bed and side auxiliary hose bed above ladder tunnel. Top of cover to be one piece and rear cover to be one piece with two flaps to cover each storage area. | 1742 |
| 3305-0314 | Nylon black cargo net crosslay cover with attached side flaps. | 456 |

| Item No. | Description | |
|---|---|---|
| 3305-0317 | Vinyl [#COL] hose bed cover with attached rear flap(s). Rear face of body to have twist locks to hold down rear flap(s). | 949 |
| 3305-0318 | Two (2) piece aluminum hosebed cover.The rear section shall roll over the forward section on tracks and rollers. When rolled open the two sections shall lift upward on a forward mounted stainless steel piano hinge to assist in loading hose. Includes appropriate handrails per NFPA guidelines. | 3915 |
| 3305-0319 | D&S brand vinyl hose bed cover with removable attached rear flap(s). Top cover to be heavy duty red vinyl with shock cord attaching system and rear nylon buckles with straps to attach rear flap. Rear flap to be matching heavy duty red vinyl with shock cords and mating buckles. Rear flap to feature weighted bottom skirting and have Yellow reflective letters centered "WEMA" as large as possible with weighted bottom per application. | 1468 |
| 3305-0320 | OBSOLETE - USE 3305-0387 D&S brand nylon red cargo net on sides for cross lay cover with shock cord attaching system. One pair of covers. | 372 |
| 3305-0321 | The mechanical attachments of the side crosslay covers to be small clip (black) IPO bungees. | 429 |
| 3305-0326 | OBSOLETE ON ALL TRUCKS ORDERED AFTER MAY 2016 - USE 3305-0387 INSTEAD D&S Custom Covers brand heavy duty 22 oz. Nylon black cargo net on sides for speed lay with shock cord attaching system. One pair of covers. | 372 |
| 3305-0328 | Vinyl [#COL] upper storage area cover without attached rear flap(s) located above the ladder tunnel. Requires rear cover option. | 334 |
| 3305-0330 | (2) piece aluminum hose bed cover for officer side of hosebed. Includes hose bed divider fill tower(s) access door(s) and handles (as applicable) (1) gas shocks positive hold-opens/hold-closed at center and at the rear (3) grab handles- (2) fwd cover and (1) fwd area of rear cover with (1) hand rail on rear cover. A full width landing platform (sized and positioned as required with overall rear end configuration) with embossed diamond plate surface will be centrally located at the upper rear of the apparatus to assist with hose bed cover operations. | 2701 |
| 3305-0331 | Single diamond plate cover for the crosslay area. Includes (2) hold downs. NO grab handle(s) on cover. | 659 |
| 3305-0334 | Vinyl [#COL] hose bed cover with attached rear flap(s) with straps and 1in. Delrin buckles. | 1003 |
| 3305-0335 | Vinyl [#COL] speed lay side covers with 1 inch Delrin buckles. | 266 |
| 3305-0336 | Cargo Net Cover for B1 compartment. Cargo netting will be 2" x 2" squares and black in color. The bottom edge of the cover shall be mechanically attached to the body. The top and sides of the cover shall be held in place with nylon covered elastic synthetic rubber cord with stainless steel hooks. | 697 |
| 3305-0337 | Diamond plate cover for forward dunnage area above the speedlays. Includes applicable grab handle(s) gas spring hold opens and latching hold downs. Cover to be embossed diamond plate and hinged forward. Cover to be wired to door ajar. | 890 |
| 3305-0338 | (2) lift-up top hatch covers above the pump enclosure non-skid aluminum treadplate with double D-ring latches in each door. Covers hinged forward and latching at rear area full length and width of upper pump house area. | 1294 |
| 3305-0339 | Vinyl red crosslay cover top with attached nylon black cargo net on each side of cover. Vinyl cover to be attached with twist locks only (No snaps). | 636 |
| 3305-0341 | Powered (2) piece aluminum hosebed cover with smooth bottom plate. Includes center hosebed divider with notched rear fill tower(s) access door(s) and handles (as applicable) (2) electric actuators (4) recessed handles (2) forward and (2) rearward area of cover with (2) handrails on trailing edge of cover. Partition at front of hosebed to cover electric actuators (approx 4" loss in hosebed length). Includes control panel [#LOC] with (3) momentary switches: (1) master on/off (1) left cover and (1) right cover. | 7090 |
| 3305-0345 | Nylon black strap with aluminum quick-release buckle for hose tray. Strap to attach to side walls of tray as high as applicable. Location: [#LOC]. | 128 |
| 3305-0346 | Nylon black cargo net w/(2) pull straps and aluminum quick release buckles on each side for crosslay cover. Cargo net end flaps to be fasten at the front of the crosslay with twist locks and at the rear with the female portion of buckle at top and bottom corners. Includes (2) 2" aluminum quick release buckles (female end) to be attached at top and bottom of the cargo net on the rear of the crosslay opening to hold cargo net in place with the male portion attached to the module. Orange 1" nylon pull strap to be attached to the paddle to release for quick drop down access. Note pull straps to be attached to the crosslay with approx 5" hand loop at end and velcro on the back to hold in place during travel. | 617 |
| 3305-0348 | TM control panel black vinyl cover. Includes upper twist locks and velcro front side and bungee cords on bottom. | 439 |
| 3305-0350 | D&S brand heavy duty [#COL] vinyl cover for running board suction tray. Location: [#LOC]. | 421 |
| 3305-0351 | D&S Custom Covers brand heavy duty [#COL] vinyl cover on sides for cross lay cover with shock cord attaching system. One pair of covers. | 381 |
| 3305-0352 | D&S brand 22 oz heavy duty [#COL] vinyl hose bed cover with attached vinyl rear flap. Top cover fastened at the front and both sides using patented shock cord system. Rear flap with weighted end attached with nylon buckles at bottom and attached to the top cover using a zipper. | 1410 |

| Item No. | Description | |
|---|---|---|
| 3305-0353 | Heavy duty black nylon cargo netting with airline style quick release buckles shall be installed at the rear apparatus hose bed. | 828 |
| 3305-0355 | Heavy duty black nylon cargo netting with airline style quick release buckles shall be installed on either side of the crosslay/speedlay hose storage areas. | 457 |
| 3305-0358 | Diamond plate cover for driver side outboard hose storage area on the Low Hosebed body. Includes applicable grab handle(s) and (2) hold downs. Cover to be embossed diamond plate and hinged outboard. Cover to be wired to door ajar. | 831 |
| 3305-0359 | (1) piece aluminum hose bed cover. Includes fill tower(s) access door(s) and handles (as applicable) (1) gas shock positive hold-open/hold-closed at the rear (1) grab handle (fwd) and (1) hand rail (rear). | 3152 |
| 3305-0360 | Embossed diamond plate (No gator grip) cover for running board suction tray(s). Includes push-button latches. Cover shall prevent water intrusion in the tray. Location(s): [#LOC]. | 455 |
| 3305-0361 | Diamond plate hosebed deflector 12" long located at front of hosebed area. Leading edge to be tapered hinged along forward edge with stainless steel piano hinge fastened with quarter turn latches. Includes a black vinyl hose bed cover attached to trailing edge of the deflector using Velcro and extending to the rear of the hose bed secured with side Velcro attachment. Rear of hose bed has cargo net secured to drivers side and quick release buckles on officer side. | 2682 |
| 3305-0362 | Nylon black strap with aluminum quick-release buckle for officer side hose tray. Strap to attach to TOP of tray. | 128 |
| 3305-0363 | Vinyl rear cover for ROM power hose bed cover. Color: Red | 485 |
| 3305-0364 | Vinyl red cover for fire extinguisher box. Cover to attach with snaps. The lower corners to have bungee cords. | 341 |
| 3305-0366 | Diamond Plate Storage Pan Cover. Includes (1) grab handle and (2) Tri-Mark latches. Hinge to the front of the storage pan. | 1259 |
| 3305-0367 | Black vinyl speedlay cover. Includes (2)single piece covers(1 each side). The cover to be attached at the bottom with slide and pull-down bungees at the top. | 617 |
| 3305-0368 | A chrome handle will be attached to each side of the diamond plate cover in addition to the standard handles centered front to rear on top outboard. | 258 |
| 3305-0369 | Diamond plate hosebed deflector 18" long located at front of hosebed area. Leading edge to be tapered hinged along forward edge with stainless steel piano hinge fastened with quarter turn latches. Includes a black vinyl hose bed cover attached to trailing edge of the deflector using Velcro and extending to the rear of the hose bed secured with side Velcro attachment. Rear of hose bed has cargo net secured to drivers side and quick release buckles on officer side. | 2682 |
| 3305-0371 | OBSOLETE: USE 3305-0392 (except SO# 140357) D&S Custom Covers brand heavy duty 22 oz. vinyl hose bed cover with removable attached rear flap(s). Top cover to be heavy duty black vinyl with shock cord attaching system and rear nylon buckles with straps to attach rear flap. Rear flap to be heavy duty black cargo net with shock cords and mating buckles. Rear flap to feature weighted bottom skirting. | 1410 |
| 3305-0373 | D&S brand 22 oz heavy duty [#COL] vinyl hosebed rear flap. For use with aluminum hosebed cover (added seperately). Rear flap with weighted end attached with nylon buckles at bottom and attached to the top cover using a zipper. | 729 |
| 3305-0374 | D&S Custom Covers brand heavy duty black cargo net on sides for combined speed lay cover with bottom footman's loop attaching points and top seatbelt style pull release straps. Top seat belt style buckles to feature a lanyard pull attached to each corner seatbelt release to extend down and join to a common pull point. Pulling lanyard shall release both buckles and allow net to drop down for rapid deployment on-scene One pair of covers sized to allow for a single cover each side over two speed lay chutes. | 729 |
| 3305-0376 | Nylon black cargo net at rear of truck for lower storage. | 618 |
| 3305-0377 | A chrome handle will be attached to the diamond plate hosebed cover access door. | 129 |
| 3305-0378 | The reaward hosebed cover flap to be notched for access of backboard storage box. | 105 |
| 3305-0379 | Vinyl cover located forward pump module open storage area. Includes mechanical hold-downs on top outer corners and quick release side flap hold downs. Cover color: Black | 328 |
| 3305-0381 | D&S brand heavy duty vinyl [#COL] crosslay cover with attached side flaps. | 627 |
| 3305-0383 | Vinyl Black hosebed cover with attached rear flap(s). Cover to have Twist locks and velcro along front and sides (no awning attachment) No snaps. The rear bungees to be tie-in versus sown (use ilets sized to secure a looped and tied bungee). Bungee to be easily removed and replaced (by fire department) in field. | 1607 |
| 3305-0384 | Red & Lime Yellow "A" pattern chevron sewn with PTFE thread on D&S Custom Covers brand hosebed rear flap (cover added seperately). | 446 |
| 3305-0385 | Reflective [#COL] letters as large as possible (up to 12") inlayed sewn with PTFE thread on D&S Custom Covers brand hosebed rear flap (cover added seperately). | 63 |
| 3305-0386 | Reflective [#COL] letters as large as possible (up to 20") inlayed sewn with PTFE thread on D&S Custom Covers brand hosebed rear flap (cover added seperately). | 107 |
| 3305-0387 | D&S brand [#COL] cargo net covers (pair) for crosslay sides. To be used with aluminum crosslay cover. Side covers to be attached to the aluminum top cover using twist locks. Bottom of the side covers attached using patented shock cord system with pull tabs. | 512 |

| Item No. | Description | |
|---|---|---|
| 3305-0388 | D&S brand [#COL] cargo net covers (pair) for speedlay sides. One pair shall cover one speedlay opening. Cover attached using patented shock cord system with pull tabs on top corners and at the center and nylon buckles at the bottom corners. | 420 |
| 3305-0389 | D&S brand [#COL] cargo net covers (pair) for speedlay sides. All speedlay openings covered using a single cover. Cover attached using patented shock cord system with pull tabs on top corners of top most speedlay and in between each speedlay and nylon buckles at the bottom corners of bottom most speeday. | 669 |
| 3305-0392 | D&S brand 22 oz heavy duty [#COL] vinyl hose bed cover with attached cargo net rear flap. Top cover fastened at the front and both sides using patented shock cord system. Rear flap attached with nylon buckles at bottom and attached to the top cover using a zipper. | 1421 |
| 3305-0393 | D&S brand 22 oz heavy duty vinyl boot over the water fill tower. Attached to and same color as the main vinyl hosebed cover. | 286 |
| 3305-0394 | D&S brand [#COL] cargo net covers for speedlay front opening. One cover per opening. Cover attached using patented shock cord system with pull tabs on top corners and in between corners and nylon buckles at the bottom corners. | 420 |
| 3305-0395 | D&S brand [#COL] cargo net cover for speedlay front openings. One cover for all openings. Cover attached using patented shock cord system with pull tabs on top corners and in between corners and nylon buckles at the bottom corners. | 669 |
| 3305-0396 | D&S brand 22 oz heavy duty [#COL] vinyl covers for speedlay front opening. One cover per opening. Cover attached using patented shock cord system with pull tabs on top corners and in between corners and nylon buckles at the bottom corners. | 420 |
| 3305-0397 | D&S brand 22 oz heavy duty [#COL] vinyl cover for speedlay front openings. One cover for all openings. Cover attached using patented shock cord system with pull tabs on top corners and in between corners and nylon buckles at the bottom corners. | 669 |
| 3305-0398 | D&S brand 22 oz heavy duty 2 piece [#COL] vinyl hosebed rear flap. For use with aluminum hosebed cover (added seperately). Rear flap with weighted end attached with seat belt style buckles at bottom and attached to the top with twist locks. | 938 |
| 3305-0399 | D&S brand heavy duty [#COL] cargo hosebed rear flap. Single cover on Aerials 2 piece cover on all other products. For use with aluminum hosebed cover (added seperately). Rear flap with nylon buckles at bottom and attached to the top with twist locks. | 938 |
| 3305-0400 | D&S brand [#COL] crosslay cover with cargo net covers (pair) for crosslay sides. Side covers to be attached to the vinyl top cover using twist locks. Bottom of the side covers attached using patented shock cord system with pull tabs. | 801 |
| 3305-0403 | D&S brand [#COL] vinyl covers (pair) for crosslay sides. To be used with aluminum crosslay cover. Side covers to be attached to the aluminum top cover using twist locks. Bottom of the side covers attached using seat belt buckles. | 707 |
| 3305-0404 | D&S brand 22 oz heavy duty [#COL] vinyl covers (pair) for speedlay sides. Cover attached using twist locks on top corners and seat belt buckles at the bottom corners. | 707 |
| 3305-0405 | D&S brand [#COL] cargo net covers (pair) for speedlay sides. Cover attached using twist locks on top corners and nylon buckles at the bottom corners. | 512 |
| 3305-0406 | Nylon black cargo net hosebed cover with attached rear flap(s). Cover to be held down with Quarter Turn fasteners ilo snaps. No Velcro to be used. | 1234 |
| 3305-0407 | Smooth plate painted job color horizontally hinged door each side of the speedlay. Includes thumb latch and wiring for door ajar switch. | 411 |
| 3305-0409 | Vinyl [#COL] hose bed cover with side twist lock fasteners without attached rear flap(s). Requires rear cover option. | 1176 |
| 3305-0410 | Vinyl [#COL] hose bed cover with attached rear flap(s). Cover to be held down with Quarter Turn fasteners ilo snaps. No Velcro to be used. | 949 |
| 3305-0412 | Two (2) piece aluminum hosebed cover.The rear section shall roll over the forward section on tracks and rollers. Includes appropriate handrails per NFPA guidelines. | 3915 |
| 3310-0017 | Auxiliary jack pad 24X24 (PR) with side mounted handle. Includes mounting brackets. | 1286 |
| 3310-0022 | Step flop down rear 12" wide rung type (PR). | 1065 |
| 3310-0039 | Cut-out on compartment floor for exhaust and cover plate for hydraulic lines. | 533 |
| 3310-0084 | All tags on body to be mechanically attached with S/S screws and nuts. | 889 |
| 3310-0088 | Body module for Snozzle boom. | 7803 |
| 3310-0098 | Step fold-down (EA). Location: [#LOC]. | 1025 |
| 3310-0112 | Body module for Snozzle boom. Side panels / doors to be smooth painted plate. | 9164 |
| 3310-0121 | Body module for 50' Mid-mount boom. 100" wide. Includes left side staircase and provision for aerial control panel. | 8463 |
| 3310-0143 | Auxiliary jack pad 24X24 (PR) with handle welded to top surface of pad. Includes mounting brackets. | 1286 |
| 3310-0146 | Auxiliary jack pad 24X24 (PR) with side mounted handle. Includes mounting brackets. Driver side mounted below L1 officer below RSBM. Mid mount boom only. | 1286 |
| 3310-0205 | Additional "Safe Operating Grade Indicator" gauge shall be provided gauge is in addition to gauge at rear of body. To be located side facing at rear of body midway up on body panel above corner tailboard. Aerial body only. | 129 |

| Item No. | Description | |
|---|---|---|
| 3310-0209 | Forward jack pad access doors painted outside surface job color and inside surface zolatone gray IPO diamond plate. 95 Mid-mount only. | 479 |
| 3310-0215 | Transverse compartment floor to be extended out to door opening in L1. | 463 |
| 3310-0252 | Body module for 50' Mid-mount boom. 100" wide. Includes left side staircase provision for aerial control panel and access door below aerial control panel. The access door and the left and right rear facing outboard panels just ahead of pump panel to be smooth plate painted job color. The following items: staircase platework access steps compartment top (below the boom module control panel) and top of module platework shall be aluminum smooth plate painted black durabak. | 9483 |
| 3315-0005 | 2-Bottle DOT 6000 PSI Breathing Air Cascade System with air panel bottle rack and all associated air lines valves and gauges. Rack and bottles to be located in [#LOC]. | 13928 |
| 3315-0006 | 4-Bottle DOT 6000 PSI breathing air cascade system with air panel bottle rack and all associated air lines valves and gauges. Rack and bottles to be located [#LOC]. | 19560 |
| 3315-0009 | 4-Bottle ASME 6000 PSI Breathing Air Cascade System with air panel bottle rack and all associated air lines valves and gauges. Rack and botles to be located in [#LOC]. | 25279 |
| 3315-0044 | Storage rack for four (4) DOT or ASME air bottles. Mounted horizontal in roof top compartments. Locate two (2) each side in roof top compartments for dealer supplied and installed DOT/ASME bottles and Cascade system. | 911 |
| 3315-0062 | 1-Bottle DOT 6000 PSI tool air system with air panel bottle and all associated air lines valves and gauges (Breathing Air Systems supplied).Bottle located in L1 rearward back wall. Air Panel located in L3 upper between reels. | 4540 |
| 3315-0063 | Storage enclosure for breathing air system's control panel shall be provided. Panel for (1) DOT tool system. Located in L3 between reels as high as possible. | 442 |
| 3315-0064 | Storage rack for One (1) DOT air bottle. Mounted vertical top of body in compartment L1 rearward to back wall. | 658 |
| 3315-0068 | Partition between roof top compartments and cascade bottle storage areas for both driver and officer side. Floor to be provided above the cascade bottle storage areas to use remaining area above. | 2989 |
| 3315-0072 | 3-Bottle DOT 6000 PSI Breathing Air Cascade System with Sidewinder Fill Station in L3 air panel above fill station and all associated air lines valves and gauges. | 19546 |
| 3315-0087 | Removable floor. A removable floor shall be provided in the roof top compartment to accommodate access and storage of ASME /DOT storage bottles below. The floor design shall be designed to maximize compartment storage space and access. The removable floor shall include a thumb latch access plate to provide quick access to the bottle valve without the need to remove the floor plate. Material shall be 3/16 smooth aluminum with a sanded finish. Locate: Roof top compartments over L3 and R3. | 1487 |
| 3320-0005 | SCBA Bottle Storage. (4) Cast Product SCBA bottle storage with gasketed doors. (2) each side in rear wheel well area. | 822 |
| 3320-0006 | SCBA Bottle Storage. (3) Cast Product SCBA bottle storage with gasketed doors. (2) officer side and (1) driver side (fwd) in rear wheel well area. | 1231 |
| 3320-0007 | SCBA Bottle Storage. (7) E-ONE SCBA bottle storage with hinged doors (doors to match wheel well material) with push button latches. (4) officer side and (3) driver side in wheel well area. | 1316 |
| 3320-0008 | SCBA Bottle Storage. (8) E-ONE SCBA bottle storage with hinged doors (doors to match wheel well material) with push button latches. (4) officer side and (4) driver side in wheel well area. | 1569 |
| 3320-0011 | SCBA Bottle Storage. (11) E-ONE SCBA bottle storage with hinged doors (doors to match wheel well material) with push button latches. (6) officer side and (5) driver side in wheel well area- (3) FWD and (2) RWD. | 1768 |
| 3320-0012 | SCBA bottle storage. (7) E-ONE SCBA bottle storage with hinged stainless steel doors with push-button latches. (4) officer side and (3) driver side in wheel well area. | 1436 |
| 3320-0014 | SCBA Bottle Storage. (6) E-ONE SCBA bottle storage with hinged doors (doors to match wheel well material) with push button latches. (3) officer side and (3) driver side in wheel well area for use with dual tank fills. | 1284 |
| 3320-0015 | SCBA Bottle Storage. (2) Cast Product SCBA bottle storage with gasketed doors. Located driver side rear wheel well area. | 822 |
| 3320-0016 | SCBA Bottle Storage. (7) E-ONE SCBA bottle storage with hinged doors with push button latches. (4) officer side and (3) driver side in wheel well area. Rear driver side to have Cast Product SCBA bottle storage with gasketed door. | 1316 |
| 3320-0017 | SCBA Bottle Storage. (4) Cast Product SCBA bottle storage with gasketed doors. (2) each side in rear wheel well area. Recessed fuel fill to be protected behind the rear driver side SCBA door. | 1471 |
| 3320-0018 | SCBA Bottle Storage. (8) Fire Shopp SCBA bottle storage with hinged doors with push button latches. (4) officer side and (4) driver side in wheel well area. | 1915 |
| 3320-0019 | SCBA Bottle Storage. (7) Fire Shopp SCBA bottle storage with doors hinged doors with push button latches. Doors shall have a brushed stainless steel finish. (4) officer side and (3) driver side in wheel well area. | 1603 |
| 3320-0020 | SCBA Bottle Storage. (4) Fire Shopp SCBA bottle storage with hinged doors with push button latches. (2) officer side and (2) driver side in wheel well area. | 1393 |

| Item No. | Description | |
|---|---|---|
| 3320-0021 | SCBA/Wheel Chock Storage. (2) Cast Product SCBA bottle storage with gasketed doors on driver side in wheel well area. (2) wheel chock storage compartments with hinged doors and push button latches located on officer side in wheel well area. (2) wheel chocks to be stored per compartment. Does not include wheel chocks. Storage doors to match wheel well material. | 3251 |
| 3320-0022 | SCBA Bottle Storage. (7) E-ONE SCBA bottle storage with hinged doors (doors to match wheel well material) with push button latches. (3) officer side and (4) driver side in wheel well area. | 1316 |
| 3320-0024 | SCBA Bottle Storage. (7) E-ONE SCBA bottle storage with hinged stainless steel doors with push button latches. (4) officer side and (3) driver side in wheel well area. | 1737 |
| 3320-0028 | Vision Mark tag for officer side rearward SCBA bottle storage. Tag to have red letters on white background. Tag to read "Extinguishers". | 48 |
| 3320-0030 | SCBA Bottle Storage. (8) E-ONE SCBA bottle storage with hinged stainless steel doors with push-button latches. (4) officer side and (4) driver side in wheel well area. | 1053 |
| 3320-0031 | Zico metal QUIC-STORAGE bottle rack for large bottles for 6.1" to 7.4" cylinder. Locate in [#LOC]. Each unit will have straps to hold the bottle in and all top units will have a flat top. Each unit will be bolted together and be [#COL] PVC coated. | 153 |
| 3320-0032 | Zico metal QUIC-STORAGE for small bottles 5.3" to 5.8" cylinder. Locate in [#LOC]. Each unit will have straps to hold the bottle in an angle floor to hold bottle in place and all top units will have a flat top. Each unit will be bolted together and be [#COL] PVC coated. | 153 |
| 3320-0038 | SCBA bottle storage. (2) Fire Shopp style SCBA bottle storage with hinged brushed stainless steel doors with push-button latches. (1) officer side and (1) driver side in the rear wheel well area. | 698 |
| 3320-0039 | SCBA bottle storage. (3) Fire Shopp style SCBA bottle storage with hinged brushed stainless steel doors with push-button latches. (2) officer side and (1) driver side in the rear wheel well area. | 1047 |
| 3320-0040 | SCBA bottle storage. (4) Fire Shopp style SCBA bottle storage with hinged brushed stainless steel doors with push-button latches. (2) officer side and (2) driver side in the rear wheel well area. | 1393 |
| 3320-0041 | SCBA Bottle Storage. (4) Cast Product SCBA bottle storage with gasketed doors with locking latches. (2) each side in rear wheel well area. | 920 |
| 3320-0043 | SCBA/Wheel Chock Storage. (5) E-ONE SCBA bottle storage with hinged doors (doors to match wheel well material) with push button latches. (4) officer side and (1) driver side in wheel well area. (1) wheel chock storage compartment with hinged door and push button latch driver side in forward wheel well area. (2) wheel chocks to be stored per compartment. Does not include wheel chocks. | 2040 |
| 3320-0044 | SCBA Bottle Storage. (6) E-ONE SCBA bottle storage with hinged stainless steel doors with push button latches. (3) officer side and (3) driver side in wheel well area. There will (2) bottles forward of the rear axle and (1) rearward. | 936 |
| 3320-0047 | SCBA Bottle Storage. (2) Cast Product SCBA bottle storage with gasketed doors. Located officer's side rear wheel well area. | 822 |
| 3320-0050 | SCBA Bottle Storage. (7) E-ONE SCBA bottle storage with hinged polished stainless steel doors with push button latches. (4) officer side and (3) driver side in wheel well area. | 1775 |
| 3320-0052 | Stainless steel trim on bottom edge of each SCBA/Extinguisher compartment opening. | 237 |
| 3320-0055 | SCBA Storage. (6) Fire Shopp SCBA bottle storage with hinged doors with push button latches. (4) Driver side rear wheel well area and (2) officer side (located either side of the rearward tandem wheel). | 2088 |
| 3320-0058 | SCBA Bottle Storage. (2) Fire Shopp SCBA bottle storage with hinged doors with push button latches. Located centered in officer side wheel well area. | 698 |
| 3320-0062 | SCBA/Wheel Chock Storage. (1) E-ONE SCBA bottle storage with hinged door (door to match wheel well material) with push button latches. (1) driver side in wheel well area. (3) wheel chock storage compartment with hinged door and push button latch (1) driver side in forward wheel well area and (2) officer side in forward and rearward wheel well area. (2) wheel chocks to be stored per compartment. Does not include wheel chocks. | 2988 |
| 3320-0065 | SCBA Bottle Storage. (6) Fire Shopp SCBA bottle storage with hinged doors with push button latches. (3) officer side and (3) driver side in wheel well area. | 1499 |
| 3320-0066 | Zico Bottle rack for large bottles. Locate in roll-out tray in B1 (vertically mounted) 3 wide x 3 deep. Each unit will have straps to hold the bottle in and all top units will have a flat top. Each unit will be bolted together and be Black PVC coated. | 150 |
| 3320-0067 | SCBA Bottle Storage. (5) Cast Product SCBA bottle storage with gasketed doors. (3) officer side - (2) over forward axle and (1) at rear of wheel well area. (2) driver side (over forward axle) in rear wheel well area. | 1027 |
| 3320-0069 | PAC Cylinder Mate. Locate in [#LOC]. Each unit will be black in color and have a strap to secure bottle. | 264 |
| 3320-0070 | Each SCBA storage area to include a ribbed rubber insert mounted to rear of storage area. | 98 |
| 3320-0071 | SCBA bottle storage for 5.25" diameter high pressure cylinders. (3) dually style SCBA bottle compartments with hinged brushed stainless steel doors and push-button latches for total storage of 6 bottles. (2) officer side and (1) driver side in the rear fender panels. | 1284 |
| 3320-0074 | SCBA Bottle Storage. (16) E-ONE SCBA bottle storage with hinged doors (doors to match wheel well material) with push button latches and one aluminum tray for each bottle. (8) officer side and (8) driver side in wheel well area. | 2466 |

| Item No. | Description | |
|---|---|---|
| 3320-0076 | SCBA Bottle Storage. (2) Cast Product SCBA bottle storage with gasketed doors. Located (1) driver's side forward wheel well area (1) officer's side rear wheel well area. | 822 |
| 3320-0079 | SCBA Bottle Storage. (7) Fire Shopp SCBA bottle storage with hinged doors with push button latches (wired to door ajar). (4) officer side and (3) driver side in wheel well area. | 2160 |
| 3320-0080 | SCBA Bottle Storage. (2) Fire Shopp SCBA bottle storage with hinged doors with push button latches. Located centered in driver side wheel well area. | 698 |
| 3320-0081 | Vision Mark tags (2) for driver side wheel well area SCBA bottle storage. Tags to have red letters on white background. (1) Tag forward inboard tube to read "WATER EXTINGUISHER". (1) Tag rearward inboard tube to read "DRY CHEM". | 118 |
| 3320-0084 | Extinguishers label to be mounted on the Officer's side rear SCBA bottle storage door IPOS. | 45 |
| 3320-0085 | SCBA bottle storage for 5.25" diameter high pressure cylinders. (4) dually style SCBA bottle compartments with hinged brushed stainless steel doors and push-button latches for total storage of 7 bottles. (2) officer side and (2) driver side in the rear wheel well area. Left side rear door covers the fuel pocket and has single bottle SCBA storage. | 1636 |
| 3320-0086 | SCBA/Wheel Chock Storage. (3) E-ONE SCBA bottle storage with hinged doors (doors to match wheel well material) with push button latches. (2) Officer side and (1) driver side in wheel well area. (2) Wheel chock storage compartments with hinged door and push button latch. (1) Officer side (1) driver side in forward wheel well area. (2) Wheel chocks to be stored per compartment. Does not include wheel chocks. | 2604 |
| 3320-0088 | SCBA/Wheel Chock Storage. (5) E-ONE SCBA bottle storage with hinged doors. Doors are smooth aluminum plate painted job color (doors only) with push button latches. (4) Officer side and (1) driver side in wheel well area. (1) Wheel chock storage compartment with hinged door and push button latch driver side in forward wheel well area. (2) wheel chocks to be stored per compartment. Does not include wheel chocks. | 2040 |
| 3320-0089 | SCBA Bottle Storage. (4) Fire Shopp SCBA bottle storage with hinged doors with push button latches with locking latches. (2) officer side and (2) driver side in wheel well area. | 1622 |
| 3320-0091 | SCBA Bottle Storage. (6) E-ONE SCBA bottle storage with hinged doors (doors to match wheel well material) with push button latches. (3) officer side and (3) driver side in wheel well area. All doors to be hinged forward. | 2340 |
| 3320-0092 | PAC Cylinder Mate. Each unit will be black in color and have a strap to hold the bottle in. Locate: Inside rear body drivers side on top of counter top in rear most corner. | 264 |
| 3320-0093 | SCBA bottle storage. (3) Fire Shopp style SCBA bottle storage with hinged brushed stainless steel doors with push-button latches. (2) officer side and (1) driver side in the forward wheel well area. | 1047 |
| 3320-0095 | SCBA Bottle Storage. (7) E-ONE SCBA/Extinguisher bottle storage with hinged brushed stainless steel doors with push button latches. (4) officer side and (3) driver side in wheel well area. | 1761 |
| 3320-0096 | Tag for SCBA/Extinguisher bottle storage. Tag to have red letters on white background. Tag to read "SCBA/FIRE EXTINGUISHER" | 48 |
| 3320-0099 | SCBA Bottle Storage. (7) Fire Shopp SCBA bottle storage with hinged doors with locking push button latches. (4) officer side and (3) driver side in wheel well area. | 2097 |
| 3320-0101 | SCBA bottle storage. (7) E-ONE SCBA bottle storage with hinged stainless steel doors with push-button latches. (4) officer side and (3) driver side in wheel well area. Left side rear door also covers the fuel pocket. | 1553 |
| 3320-0103 | SCBA Bottle Storage. (7) E-ONE SCBA bottle storage with hinged doors (doors to match wheel well material) with 1/4 turn latches. (4) officer side and (3) driver side in wheel well area. | 1316 |
| 3320-0106 | SCBA Bottle/Extinguisher Storage. (8) E-ONE SCBA/Ext. bottle storage with hinged doors (doors to match wheel well material) with push button latches. (4) officer side and (4) driver side in wheel well area. Driver side to accommodate four (4) Scott 45 min 4500 PSI bottles. Officer side to accommodate two(2)Amerex model A411 20# ABC Dry Chem extinguishers and Two(2) Amerex model A240 2.5 gal pressurized water extinguishers. Officer side to load one ABC drychem and One H2O extinguisher in forward storage and same in rearward storage arraged thus to provide space for the different nozzles on extinguishers. | 1620 |
| 3320-0107 | SCBA Bottle Storage. (4) Fire Shopp SCBA bottle storage with hinged doors with push button latches. (4) driver side only in wheel well area. Officer side SCBA not to be installed due to rear body plumbing options. Available only on commercial units with forward fuel tanks or custom applications with officer side only fuel fill. | 968 |
| 3320-0110 | SCBA Bottle Storage. (4) E-ONE SCBA bottle storage with hinged doors (doors to match wheel well material) with push button latches. (4) officer side only. | 785 |
| 3320-0111 | SCBA Bottle Storage. (4) E-ONE SCBA bottle storage with hinged doors (doors to match wheel well material) with push button latches. (4) driver side only. | 785 |
| 3320-0114 | SCBA Bottle Storage. (9) E-ONE SCBA bottle storage with hinged doors (doors to match wheel well material) with push button latches. (6) officer side and (3) driver side in wheel well area. | 2885 |
| 3320-0115 | SCBA Bottle Storage. (6) E-ONE SCBA bottle storage with hinged doors (doors to match wheel well material) with push button latches. (4) officer side and (2) driver side in wheel well area. | 1177 |
| 3320-0117 | SCBA Air Pack Storage. (4) E-ONE SCBA air pack storage (2 each side) with hinged door (door to match wheel well material) with push button latches. Does not include SCBA bottles or air pack. | 3149 |

| Item No. | Description | |
|---|---|---|
| 3320-0119 | SCBA/Wheel Chock Storage. (5) E-ONE SCBA bottle storage with hinged doors (doors to match wheel well material) with push button latches. (4) officer side and (1) driver side in wheel well area. (1) wheel chock storage compartment with hinged door and push button latch driver side in forward wheel well area. (2) wheel chocks (fits Worden #HWG non-folding chock) to be stored per compartment. Does not include wheel chocks. | 2925 |
| 3320-0122 | SCBA Bottle Storage. (15) Fire Shopp SCBA bottle storage with hinged doors with push button latches. (8) officer side and (7) driver side in wheel well area. | 3518 |
| 3320-0123 | SCBA Bottle Storage. (12) E-ONE SCBA bottle storage with hinged doors (doors to match wheel well material) with push button latches. Note one aluminum tray for each bottle in double storage compartments. Each side of body to have (2) Double SCBA bottle storage compartments (1) offset forward over each tandem wheel and (2) single storage compartments (1) offset rearward over each tandem wheel in wheel well area. | 2077 |
| 3320-0124 | SCBA Bottle Storage. (10) E-ONE SCBA bottle storage with hinged doors (doors to match wheel well material) with push button latches. (6) officer side in 2 (3) bottle pods and (4) driver side in wheel well area. Driver side to have (1) 3 bottle pod forward and a single bottle and fuel fill rearward under a single door. | 2910 |
| 3320-0125 | SCBA bottle storage. (7) E-ONE SCBA bottle storage with hinged stainless steel doors with push-button latches. (4) officer side and (3) driver side in wheel well area. Left side rear door also covers the fuel pocket. Fuel pocket shall be formed stainless steel with opening large enough to open fuel cap with gloved hand. | 1715 |
| 3320-0127 | SCBA/SPEED-DRI Storage. (5) E-ONE SCBA bottle storage/Speedi-Dri hopper with hinged doors (doors to match wheel well material) with push button latches. (2) SCBA officer side rearward (1) speedy-dri pull out storage compartment forward. (3) driver side in wheel well area (2) forward (1) rearward with recessed fuel fill. Speedy Dri pull out storage to be sized to utilize available space in forward wheel well and hold max available capacity per wheel well area as optioned. Hopper to hold approximately 35 lbs of absorbent. | 3106 |
| 3320-0128 | SCBA Bottle Storage. (3) E-ONE SCBA bottle storage with hinged doors (doors to match wheel well material) with push button latches. (3) driver side ONLY in wheel well area. | 602 |
| 3320-0129 | SCBA Bottle Storage. (10) E-ONE SCBA bottle storage with hinged brushed stainless steel doors with push button latches. (6) officer side and (4) driver side in wheel well area. Officer side to have (1) 3 bottle storage forward and (1) 3 bottle storage rearward. Driver side to have (1) 3 bottle storage forward and a single bottle and fuel fill rearward under a single door. | 3331 |
| 3320-0130 | SCBA/Wheel Chock Storage. (5) E-ONE SCBA bottle storage with hinged doors (doors to match wheel well material) with push button latches. (3) officer side and (2) driver side in wheel well area. (1) wheel chock storage compartment with hinged door and push button latch driver side in forward wheel well area. (2) wheel chocks to be stored per compartment. Does not include wheel chocks. Requires right side fuel fill. | 2925 |
| 3320-0131 | SCBA Bottle Storage. (4) Fire Shopp SCBA bottle storage with hinged doors with push button latches. (2) officer side and (2) driver side in 2 bottle pods in forward wheel well areas only. | 1393 |
| 3320-0132 | SCBA/Wheel Chock Storage. (7) E-ONE SCBA bottle storage with hinged doors (doors to match wheel well material) with push button latches. (6) officer side and (1) driver side in wheel well area. (1) wheel chock storage compartment with hinged door and push button latch driver side in forward wheel well area. (2) wheel chocks to be stored per compartment. Does not include wheel chocks. | 3108 |
| 3320-0136 | SCBA/Wheel Chock Storage. (3) E-ONE SCBA bottle storage with hinged doors (doors to match wheel well material) with push button latches. (2) officer side and (1) driver side in wheel well area. (1) wheel chock storage compartment with hinged door and push button latch driver side in forward wheel well area. (2) wheel chocks to be stored per compartment. Does not include wheel chocks. | 1666 |
| 3320-0137 | SCBA Bottle Storage. (2) Fire Shopp SCBA double bottle storage with hinged doors and push button latches. (2) SCBA bottles forward each side of body in wheel well area. | 958 |
| 3320-0138 | SCBA Bottle Storage. (11) SCBA bottle storage with brushed stainless steel hinged doors with push-button latches. (6) officer side and (5) driver side in wheel well area. For use with high pressure 5.25" diameter cylinders only. | 2413 |
| 3320-0149 | SCBA/CHOCK Bottle Storage. (7) E-ONE SCBA bottle storage with hinged doors (doors to match wheel well material) with push button latches. (6) officer side in 2 (3) bottle pods and (1) driver side in wheel well area. Driver side to have (1) wheel chock storage pod forward for 2 chocks and a single bottle and fuel fill rearward under a single door. | 2910 |
| 3320-0150 | SCBA Bottle Storage. (4) E-ONE SCBA bottle storage with hinged doors (doors to match wheel well material) with push button latches. (4) driver side in wheel well area. Driver side to have (1) 3 bottle pod forward and a single bottle and fuel fill rearward under a single door. Officer side shall not have SCBA tubes to accommodate space for rear intake piping to utilize the wheel well area for piping. | 1061 |

| Item No. | Description | |
|---|---|---|
| 3320-0152 | SCBA Pack (1) and Spare Bottle Storage (6). Storage compartment in driver side forward wheel well area to hold (1) SCBA pack and (1) SCBA spare bottle (partitioned). (1) spare bottle storage in rearward driver side wheel well area. (4) bottles in two storage compartments on officer side (one front and one rear of wheel well). Compartment doors will be hinged with push button latches and match wheel well material. Bottles are Scott 4.5. Does not include equipment. | 3158 |
| 3320-0155 | Vision Mark tag for officer SCBA bottle storage. Tag to have red letters on white background. Tag to read "SCBA STORAGE". | 48 |
| 3320-0156 | Vision Mark tag for extinguisher storage. Tag to have red letters on white background. Tag to read "EXTINGUISHER". | 48 |
| 3320-0158 | SCBA/Wheel Chock Storage. (5) E-ONE SCBA bottle storage with stainless steel hinged doors and push button latches. (2) officer side and (3) driver side in wheel well area. Rearward door on drivers side covers the fuel fill. (1) 25" deep wheel chock/misc. storage compartment with hinged door and push button latch officer side in forward wheel well area. Fits up to (2) Worden #HWG non- folding chocks or misc. storage as desired. Does not include wheel chocks or partitions. | 2925 |
| 3320-0159 | SCBA bottle storage. (5) E-ONE SCBA bottle storage with hinged stainless steel doors with push-button latches. (3) officer side and (2) driver side in wheel well area. | 1027 |
| 3320-0160 | SCBA/Wheel Chock Storage. (1) E-ONE SCBA bottle storage with hinged door (door to match wheel well material) with push button latches. (1) rearward driver side in wheel well area. The rear door on driver side will be a single door and will not cover the fuel fill. (3) wheel chock storage compartment with hinged door and push button latch (1) driver side in forward wheel well area and (2) officer side in forward and rearward wheel well area. (2) wheel chocks to be stored per compartment. Does not include wheel chocks. | 2988 |
| 3320-0162 | SCBA/Extinguisher E-ONE Style Storage. (6) SCBA; (4) officer side and (2) driver side forward with (1) driver extinguisher driver side rearward in wheel well area. Brushed stainless steel hinged doors with push-button latches. Extinguisher compartments sized for up to a 7.25" diameter bottle. Extinguisher compartment 8.5" square minimum ID and as deep as possible to store different size extinguishers. | 1482 |
| 3320-0165 | The Wheel Chock storage area to include a ribbed rubber insert mounted to the walls and floor of storage area. | 195 |
| 3320-0166 | SCBA/Wheel Chock Storage. (1) E-ONE SCBA triple bottle storage driver side in rear wheel well area forward. (1) E-ONE SCBA single bottle storage driver side in rear wheel well area rearward. SCBA compartments to fit up to a 6.26" diameter MSA H-45 low-profile carbon cylinders. (2) wheel chock compartments on the officer side (front and rear of wheels) up to (2) wheel chocks (2) extinguishers or misc. equipment per compartment. Does not include equipment or compartment partitions. | 2443 |
| 3320-0169 | SCBA Bottle Storage. (5) Fire Shopp SCBA bottle storage with hinged doors with push button latches. (2) single SCBA officer side and (1) single and (1) double on driver side in wheel well area. The forward drivers side to include the double SCBA storage. | 1524 |
| 3320-0173 | SCBA/Oxygen Bottle Storage. (4) Fire Shopp SCBA bottle storage with hinged doors with push button latches. (2) officer side and (2) driver side in wheel well area. The (2) forward tubes shall hold "D" sized oxygen bottle (1) each side the (2) rear tubes to hold SCBA bottles (1) each side. | 1918 |
| 3320-0174 | SCBA/Wheel Chock Storage. (5) E-ONE SCBA bottle storage with hinged stainless steel doors with push button latches. (4) officer side and (1) driver side in wheel well area. (1) wheel chock storage compartment with hinged door and push button latch driver side in forward wheel well area. (2) wheel chocks to be stored per compartment. Does not include wheel chocks. | 2161 |
| 3320-0175 | SCBA Bottle Storage. (10) E-ONE SCBA bottle storage with hinged doors (doors to match wheel well material) with push button latches. (6) officer side and (4) driver side in wheel well area. | 2003 |
| 3320-0176 | SCBA Bottle Storage. (9) E-ONE SCBA bottle storage with hinged doors (doors to match wheel well material) with push button latches. (5) officer side in (1) 3-bottle pod forward (1) double SCBA bottle storage compartment rearward. (4) driver side in wheel well area. Driver side to have (1) 3 bottle pod forward and a single bottle and fuel fill rearward under a single door. | 2801 |
| 3320-0177 | SCBA bottle storage with hinged doors (doors to match wheel well material) with push button latches. (4) driver side in wheel well area. Driver side to have (1) 3 bottle pod forward and a single bottle and fuel fill rearward under a single door. | 1044 |
| 3320-0179 | There shall be a horizontally mounted SCBA/Fire Extinguisher storage trough(s) located in compartment [#LOC]. | 131 |
| 3320-0182 | E-ONE (1) SCBA bottle storage in rear wheel well with hinged door and push button latch. Door material to match wheel well material. Door shall cover the recessed fuel fill if located adjacent to the SCBA storage. | 281 |
| 3320-0183 | E-ONE (2) SCBA bottle storage in rear wheel well with hinged door and push button latch. Door material to match wheel well material. | 423 |
| 3320-0184 | E-ONE designed (3) SCBA bottle storage in rear wheel well with hinged door and push button latch. Door material to match wheel well material. | 658 |
| 3320-0185 | Fire Shopp brand (1) SCBA bottle storage in rear wheelwell with hinged door and push button latch. Door shall have a brushed stainless steel finish. Door shall NOT cover the recessed fuel fill if located adjacent to the SCBA storage. | 351 |

| Item No. | Description | |
|---|---|---|
| 3320-0186 | Fire Shopp brand (2) SCBA bottle storage in rear wheelwell with hinged door and push button latch. Door shall have a brushed stainless steel finish. | 546 |
| 3320-0187 | Cast Products brand (1) SCBA bottle storage with gasketed door and push button latch. Door shall NOT cover the recessed fuel fill if located adjacent to the SCBA storage. Location: [#LOC] | 234 |
| 3320-0188 | E-ONE designed Wheel Chock storage compartment in rear wheel well with hinged door and push button latch. Door material to match wheel well material. Storage area shall hold (2) Zico Model SAC-44-E or comparable Wheel Chocks (not included). | 470 |
| 3320-0189 | E-ONE Speedy Dry storage compartment in rear wheel well hinged door and push button latch. Door material to match wheel well material. Includes a slide out bin (sanded finish) with hinged lid on top and grab handle on front. Capacity: Approximately 35 lbs of Speedy Dry absorbent material. | 1221 |
| 3320-0192 | Compartment approx 26" W x 10" H x 25" D with drop down door. Door material to match wheelwell finish. Minimum 34" high lower body compartment openings required. Location:[#LOC] | 611 |
| 3320-0194 | E-ONE (4) SCBA bottle storage (2 bottle storage per door) located [#LOC] with hinged doors and push button latches. The doors shall be hinged at the center with one door facing forward and other door facing rearward. Door material to match wheel well material. | 843 |
| 3320-0195 | E-ONE designed (6) SCBA bottle storage (3 bottle storage per door) located [#LOC] with hinged doors and push button latches. The doors shall be hinged at the center with one door facing forward and other door facing rearward. Door material to match wheel well material. | 1318 |
| 3320-0196 | SCBA Air Pack Storage. (1) E-ONE SCBA air pack storage with hinged door (door to match wheel well material) with push button latches. Does not include SCBA bottles or air pack. | 575 |
| 3320-0197 | E-ONE (2) SCBA bottle storage (1 bottle storage per door) located [#LOC] with hinged doors and push button latches. The doors shall be hinged at the center with one door facing forward and other door facing rearward. Door material to match wheel well material. | 562 |
| 3320-0198 | Fire Shopp brand (2) SCBA bottle storage (1 bottle storage per door) located [#LOC] with hinged doors and push button latches. Doors shall have a brushed stainless steel finish and shall be hinged at the center with one door facing forward and other door facing rearward. | 761 |
| 3320-0199 | Fire Shopp brand (4) SCBA bottle storage (2 bottle storage per door) located [#LOC] with hinged doors and push button latches. Doors shall have a brushed stainless steel finish and shall be hinged at the center with one door facing forward and other door facing rearward. | 1184 |
| 3320-0200 | Cast Products brand (2) SCBA bottle storage (1 bottle storage per door) located [#LOC] with gasketed doors and push button latches. The doors shall be hinged at the center with one door facing forward and other door facing rearward. | 846 |
| 3325-0000 | E-ONE designed PTO driven HRT system 9000-10500 PSI system with 3 tool capability. | 39269 |
| 3325-0001 | E-ONE designed PTO driven HRT system 9000-10500 PSI system with 4 tool capability. | 48055 |
| 3325-0003 | E-ONE designed PTO driven HRT system 9000-10500 PSI system with 2 tool capability. | 35897 |
| 3325-0004 | XRT Hydraulic tool system with 2 tool capability. 10500 PSI system. Includes selector vlv for each reel hyd res / filter and remote cooler. Requires gen with XRT hyd pump. | 24683 |
| 3325-0005 | E-One designed PTO driven HRT system. 5000 PSI system with 3 tool capability. | 39269 |
| 3325-0009 | XRT Hydraulic tool system with 3 tool capability. 5000 PSI system. Includes selector vlv for each reel hyd res / filter and remote cooler. Requires gen with XRT hyd pump. | 27743 |
| 3325-0010 | XRT Hydraulic tool system with 2 tool capability. 5000 PSI system. Includes selector vlv for each reel hyd res / filter and remote cooler. Requires gen with XRT hyd pump. | 28905 |
| 3325-0014 | XRT Hydraulic tool system with 3 tool capability. 10500 PSI system. Includes selector vlv for each reel hyd res / filter and remote cooler. Requires gen with XRT hyd pump. | 27743 |
| 3325-0015 | HRT 2 tool system for Holmatro thru drive on generator hydraulic pump for HRT air clutch and drive pump. Locate reservoir in upper pan adjacent to the hydraulic generator unit in rear dunnage pan. Locate the manifold inside the pump panel compartment up high with roof access for adjustments. Locate the cooler adjacent to the foam system cooler in forward dunnage pan. Plumb to reels in front bumper. | 54123 |
| 3325-0018 | There will be a thru shaft for the generator to work off the same PTO as HRT system. | 2464 |
| 3325-0021 | Genesis Mach III Hydraulic tool system with 2 tool capability. 10000 PSI system. Requires Harrison gen with IHT configuration. Pump location: [#LOC]. | 17184 |
| 3325-0022 | XRT Hydraulic tool system with 1 tool capability. Includes selector vlv for each reel hyd res / filter remote cooler and hydraulic pump. Requires Smart Power Liberator generator. | 21884 |
| 3325-0024 | XRT PTO driven HRT system 5000 PSI system with 2 tool capability. | 32720 |
| 3325-0033 | A wireless remote will be hooked up to the HRT system. There will be up to 4 wireless controllers located near reels. System antennas and control module will be located in the dunnage area. | 5004 |
| 3330-0001 | Slide-out platform integral driver side running board (includes hand rail as applicable). | 1549 |
| 3330-0002 | Slide-out platform rollerless. Includes chrome grab handle centered on the front face of the platform (includes hand rail as applicable). Located [#LOC]. | 1499 |
| 3330-0007 | Folding Step. Location [#LOC]. Each location requires a minimum of (1) handrail per NFPA. | 146 |
| 3330-0008 | Handrail up to 12". Location [#LOC]. | 128 |
| 3330-0012 | Intermediate pump panel step officer side with forward tapered corner. Includes step lighting (as applicable). Step light to be switched thru work light in cab. | 772 |

| Item No. | Description | |
|---|---|---|
| 3330-0013 | Platform with 500lbs. slides. Locate [#LOC]. Platform sized as required per location. I includes a chrome grab pull handle and a body mounted handrail (as applicable for body mounted locations). | 1009 |
| 3330-0020 | Intermediate pump panel step driver and officer side with forward tapered corner. Includes step lighting (as applicable). Step lights to be switched through work light in cab. | 1482 |
| 3330-0023 | Slideout platform-integral officer side running board. Not available with a front suction (includes handrail as applicable). | 1549 |
| 3330-0025 | Steps rear. Includes folding steps on officer side (staggered stepped as applicable with tailboard depth) for additional hosebed access and handrail mounted on officer side upper hosebed side (as applicable). | 417 |
| 3330-0026 | (3) Cast Product steps. Mount to driver side of B1. To include lighting under each step and driver side upper hose bed hand rail. | 385 |
| 3330-0028 | Rear driver side cast products steps with intermediate step. Includes step lighting with cast product steps. | 1087 |
| 3330-0031 | Intermediate pump module step officer side with forward and rearward tapered corners. Locate just below the crosslay floor. Includes step lighting (as applicable). Step light to be switched thru work light in cab. | 506 |
| 3330-0033 | Intermediate pump module step driver side. Locate just below the crosslay floor. Includes step lighting (as applicable). Step light to be switched thru work light in cab. | 357 |
| 3330-0034 | Recessed folding step box. Driver side rear. To accommodate all steps as applicable. | 287 |
| 3330-0035 | Recessed folding step box. Officer side rear. To accommodate all steps as applicable. | 287 |
| 3330-0036 | (5) Folding Steps. Located on the officer and driver side behind rear doors of cab. Handrail to be mounted on upper portion of cab for access to the crosslays | 1488 |
| 3330-0037 | Intermediate pump panel step driver side directly below crosslays (full width). Includes (2) lower folding steps with (1) loop handrail towards rear. Includes step lighting (as applicable). Step light to be switched thru work light in cab. | 1257 |
| 3330-0038 | Upper hosebed handrail. Locate to rear most area of hosebed with same stanchions as rear tailboard handrails. Handrail not to be in the hosebed. | 268 |
| 3330-0041 | Steps Rear NFPA. Includes diamond plate corner steps on driver and officer side for NFPA hosebed access and handrail mounted on driver and officer side upper hosebed side (as applicable) | 271 |
| 3330-0042 | Hansen white LED body hand rails upgrade package (includes pump module if applicable). | 1503 |
| 3330-0043 | Full width handrail to be mounted just below hosebed. Handrail to run from beavertail to beavertail. Includes (2) pass-through stanchions equally spaced. This handrail is in place of standard handrail. | 399 |
| 3330-0044 | Step rear intermediate. Includes steps for NFPA hosebed access and handrail on upper hosebed side on driver side. Locate: (1) large corner step each side below intermediate step and (1) small corner step each side above intermediate step. Includes handrail mounted on officer upper hosebed side. | 820 |
| 3330-0045 | Handrail to be mounted just below hosebed to be thru bolted. Includes (2) pass-through stanchions equally spaced. This 48" handrail is in place of standard 48" handrail. | 571 |
| 3330-0047 | (2) Folding Steps. Located on the officer and driver side behind rear doors of cab. Rear cab handrails will be used for steps. | 804 |
| 3330-0048 | Handrails above compartments over 96" (Pair). To be mounted on top of body. | 399 |
| 3330-0049 | Handrails full length of hosebed cover door. Total of (4) handrails. Location (1) handrail on inboard side of each hosebed cover door. | 1251 |
| 3330-0050 | Intermediate pump panel step driver side with forward tapered corner. Includes step lighting (as applicable). Step light to be switched thru work light in cab. | 772 |
| 3330-0052 | Slideout platform-rollerless low profile style located [#LOC]. Includes (1) hand rail (mounted as applicable). | 1005 |
| 3330-0053 | Folding Step Fire Shopp. Location [#LOC]. Step include integral lights. Each location requires a minimum of (1) handrail per NFPA. | 169 |
| 3330-0055 | Steps rear Fire Shopp. Steps include integral lights. Includes folding steps on officer side (staggered stepped as applicable with tailboard depth) for additional hosebed access and handrail mounted on officer side upper hosebed side (as applicable). | 504 |
| 3330-0056 | Intermediate pump panel step officer side with forward and rearward tapered corners. Includes step lighting (as applicable). Step lights to be switched thru work light in cab. | 963 |
| 3330-0057 | Handrails to be mounted just below hosebed to be thru bolted. Handrails to have offset stanchions. These (2) appropriately sized handrails are in place of standard 48" handrail. | 571 |
| 3330-0058 | Intermediate pump panel step driver side with forward and rearward tapered corners. Includes step lighting (as applicable). Step lights to be switched thru work light in cab. | 963 |
| 3330-0061 | Handrail to be mounted on the rear of the hosebed. Handrail to use offset stanchions and be mounted downward. This is in place of standard below the hosebed handrail. | 205 |
| 3330-0062 | Step rear intermediate. Intermediate rear step to be embossed diamond plate. Includes folding steps on driver side for NFPA hosebed access and handrail mounted on driver side upper hosebed side (as applicable). | 633 |

| Item No. | Description | |
|---|---|---|
| 3330-0063 | Steps rear. Includes diamond plate gator grip corner steps on officer side for hosebed access and handrail mounted on officer side upper hosebed side (as applicable). | 523 |
| 3330-0064 | Hosebed Access Ladder. Aluminum extruded ladder with diamond plate gator grip steps located on driver side inboard of beavertail. Requires removal of gator grip on tailboard below step for mounting. | 1474 |
| 3330-0065 | Zico access ladder. Location: [#LOC]. Includes required step lights. | 1926 |
| 3330-0067 | Compartment (interior) mounted manually operated fold-out step/platform with gator grip surface. Includes a mechanical hold close located in the compartment and (1) vertically mounted handrail mounted along one side of the compartment exterior. Step/platform will reduce compartment interior mounted items overall width and/or depth. Locate: [#LOC]. | 1122 |
| 3330-0069 | Spacer bracket for platform mounting. Bracket to lower platform to approx. 12" from ground (measured to bottom of platform). Locate: [#LOC]. | 296 |
| 3330-0070 | Steps rear driver and officer (Montreal). Includes folding steps on driver and officer side with steps mounted as far rearward on the beavertail (not staggered) as applicable. Steps located (top of tailboard to top of step(down) flat surface) lowest (11") middle (24.5") and top (39.5"). | 481 |
| 3330-0071 | Step rear intermediate above B2. | 809 |
| 3330-0072 | Hansen red LED body handrails upgrade package. | 1503 |
| 3330-0073 | Step rear intermediate embossed tread plate. Locate rear body. Includes handrail (in place of horizontal hosebed handrail). | 633 |
| 3330-0074 | Access ladder. Aluminum extruded ladder with ribbed aluminum extrusion steps located on officer side of pump module offset to the rear. Rear rail to loop up and over to aid in access into/out of dunnage storage pan. | 1812 |
| 3330-0075 | Slideout platform - SlideMaster. Location: [#LOC]. | 1977 |
| 3330-0076 | Pool style hand rail. Includes and approx. 16" loop over the body. Location: driver side staircase; forward hand rail. | 288 |
| 3330-0077 | Intermediate pump panel step officer without taper. Includes step lighting (as applicable). Step light to be switched thru work light in cab. | 814 |
| 3330-0078 | Handrail pool stlye. Locate on rear of beavertail and rear upper body corner. In place of standard 48" beavertail and 10" upper rear body handrails. | 498 |
| 3330-0079 | Slide-out platform rollerless. Includes chrome grab handle centered on the front face of the platform (includes hand rail as applicable for body mounted locations) and required step lighting. Located [#LOC]. | 1009 |
| 3330-0080 | Intermediate pump panel step driver side located rearward of the crosslays. Includes step lighting (as applicable). Step lights to be switched thru work light in cab. | 963 |
| 3330-0081 | (5) Folding Steps. Located on the driver side behind rear doors of cab w/ diamond plate paint guard. Handrail to be mounted on upper portion of cab for access to dunnage area. | 879 |
| 3330-0082 | Handrail 36". Location: driver side vertically mounted on forward corner extrusion of pump module.. | 380 |
| 3330-0083 | Handrail 18". Location: (1) on top of forward staircase module 3x3 extrusion (1) on officer side lip of staircase storage pan and (1) on top of officer side compartment top offset to front. | 568 |
| 3330-0085 | Ladder aluminum access rear of body with extruded and ribbed extrusion sides and steps. The outboard vertical extrusion is to extend full height and over the rear upper body for an additional gripping surface when accessing the upper body/hosebed area. Locate to the [#LOC] | 658 |
| 3330-0087 | Aluminum access ladder with extruded and ribbed extrusion sides and steps. Note that ladder width may vary with position of pump intake/discharge locations. Locate to the [#LOC] | 1314 |
| 3330-0089 | Intermediate pump panel step driver and officer side without taper. Includes step lighting (as applicable). Step light to be switched thru work light in cab. Mounting feet to be reverse mounted due to vertically hinged panel. | 1482 |
| 3330-0090 | Handrail on pump module to be full length as possible. Location: [#LOC]. | 128 |
| 3330-0093 | Ladder access aluminum extruded ladder with ribbed aluminum extrusion steps located on the rear offset to the officer side. Includes required step lights. | 1824 |
| 3330-0096 | Steps rear package. Includes (2) diamond plate gator grip corner steps - (1) up high and (1) down low and (1) folding step between the corner steps on the driver and officer sides for hosebed access. Includes handrails mounted vertically on driver and officer side rear upper hosebed sides (as applicable). | 523 |
| 3330-0097 | Handrail 36". Location: (1) each side on driver and officer side pump module up high. | 571 |
| 3330-0098 | Handrail 12". Location outboard driver and officer side rear hosebed side. | 128 |
| 3330-0099 | Step rear intermediate. Intermediate rear step to be located just below the upper rear body compartment. | 633 |
| 3330-0100 | Step below body. Located below [#LOC]. Each location requires a minimum of (1) handrail / handhold per NFPA. | 385 |
| 3330-0101 | Intermediate pump panel step for rear pump panel. | 429 |
| 3330-0104 | Dual lighted LED folding steps rear NFPA. Includes folding steps on officer side (staggered stepped as applicable with tailboard depth) for additional hosebed access and handrail mounted on officer side upper hosebed side (as applicable). | 445 |

| Item No. | Description | |
|---|---|---|
| 3330-0105 | Dual lighted LED folding step. Location: [#LOC]. Each location requires a minimum of (1) handrail per NFPA. | 138 |
| 3330-0106 | Step rear intermediate. Intermediate rear step to be located just below the upper ladder storage compartment. | 633 |
| 3330-0107 | All body and pump module (if applicable) hand rails to use Austin Hardware model GR-002-AL-BRT-144 knurled bright anodized aluminum tubes IPOS. | 335 |
| 3330-0118 | Steps rear. Steps include integral LED lights. Includes (6) folding steps - (3) on driver side and (3) on officer side (staggered stepped as applicable with tailboard depth) for additional hosebed access and handrail mounted on driver and officer side upper hosebed side (as applicable). | 747 |
| 3330-0123 | Rear landing platform located above the B1 compartment. Landing platform to be used for hose loading operations and will be embossed diamond plate. | 633 |
| 3330-0124 | Access ladder. Aluminum extruded ladder with ribbed aluminum extrusion steps located on the rear offset to the driver side. Includes required step lights. | 1824 |
| 3330-0125 | Slideout platform-integral driver side running board (includes handrail as applicable). The platform step to be smooth plate with gator grip painted black durabak. | 1862 |
| 3330-0126 | Slideout platform-rollerless. Includes chrome grab handle centered on the frt face of the platform (includes handrail as applicable). Located below officer side pump panel. The platform step to be smooth plate with gator grip painted black durabak | 1812 |
| 3330-0127 | Handrail 36". Location: (1) each side on driver and officer side pump module forward extrusion vertically mounted. | 571 |
| 3330-0129 | Auto Kwikee step. Step shall be wired into the door interlock system to enable the step to automatically extend when the door is opened and retract when the door is closed. Location: [#LOC]. | 920 |
| 3330-0133 | Access ladder. Aluminum extruded ladder with ribbed aluminum extrusion steps located on the rear offset to the driver side. Includes required step lights. | 1824 |
| 3330-0134 | Step rear intermediate. Locate above rear traffic advisor includes handrail (in place of horizontal hosebed handrail). | 633 |
| 3330-0135 | Handrail on top pump module to be full length as possible. Location: Driver and officer side pump module. | 236 |
| 3330-0136 | The rear body vertical hand rails extended to top of body. | 138 |
| 3330-0137 | The side upper rear body handrails extended to rear of body. | 138 |
| 3330-0139 | Step below side intake / discharge panel (PR). Embossed dia plt with supports. Each location requires a minimum of (1) handrail / handhold per NFPA. eMAX only. | 1505 |
| 3330-0152 | Handrail 36". Location offset to driver side of body headboard forward of the water tank fill tower(s). | 254 |
| 3330-0155 | Step rear intermediate. Locate above B1. | 633 |
| 3330-0156 | Step rear intermediate. Intermediate rear step to be located above the thru the tank storage tunnel. | 633 |
| 3330-0158 | Step below side intake / discharge panel (PR). Gator grip diamond plate. Each location requires a minimum of (1) handrail / handhold per NFPA. eMAX only. | 1151 |
| 3330-0159 | Step rear intermediate. Intermediate rear step to be located above the rear Newton dump. | 633 |
| 3330-0160 | Handrail 12". Location inboard driver side rear hosebed side angled. | 128 |
| 3330-0161 | Handrail 12" with angled stanchions. Location: outboard on driver side compartment top 8" off front compartment face. | 128 |
| 3330-0165 | Handrail 24". Location [#LOC]. | 231 |
| 3330-0166 | Handrail 12". Location: Mount on rear of truck at E-One discretion. | 128 |
| 3330-0167 | Intermediate rear step to be approximately 10" deep located above the rear Newton dump valve and be of embossed aluminum treadplate. | 633 |
| 3330-0168 | Slide-out platform rollerless. Includes chrome grab handle centered on the front face of the platform (includes hand rail as applicable). Located under right side pump running board. | 1499 |
| 3330-0170 | Slideout platform-roller-less. Includes chrome grab handle and retaining pin centered on the front face of the platform (includes handrail as applicable for body mounted locations) and required step lighting. Located: [#LOC]. | 1009 |
| 3330-0171 | Steps rear NFPA compliant. Includes diamond plate corner steps on driver and officer side rear of body for NFPA hose bed access. Includes hand rails mounted vertically on driver and officer side rear beavertails and horizontal below the hose bed (as applicable). | 457 |
| 3330-0173 | Step bolt on 19.9" X 8" gator grip stepping surface shall be mounted [#LOC]. | 349 |
| 3330-0174 | Slideout platform-rollerless. Includes chrome grab handle centered on the front face of the platform (includes hand rail as applicable). The platform step to be smooth plate with gator grip painted black durabak. Located [#LOC]. | 1797 |
| 3330-0175 | Intermediate pump panel step driver side above operator's panel. Includes (2) loop handrails (1) forward (1) rearward. Includes step lighting (as applicable). Step light to be switched thru work light in cab. | 1376 |
| 3330-0177 | Intermediate pump panel step constructed of 3/16" (.187") aluminum smooth plate with black Scorpion coating (IPOS diamond plate) for rear pump panel. | 589 |

| Item No. | Description | |
|---|---|---|
| 3330-0179 | Steps below side intake / discharge panel (PR). Bustin Tread and diamond plate. Each location requires a minimum of (1) hand rail / hand hold per NFPA. SM SS eMAX only. | 1151 |
| 3330-0182 | Step rear intermediate embossed treadplate. Locate above B1 includes handrail (in place of horizontal hosebed handrail). | 633 |
| 3330-0183 | Step rear intermediate. Locate above B1 includes handrail (in place of horizontal hosebed handrail). Step construction shall be aluminum smooth plate IPO diamond plate painted Black Scorpion (rough finish). | 891 |
| 3330-0184 | Step rear intermediate. Locate above B2 includes handrail (in place of horizontal hosebed handrail). | 633 |
| 3330-0185 | Step below side intake / discharge panel (PR). Gator grip plate constructed of 1/8" (.125") aluminum smooth plate with black Scorpion coating (rough finish) IPOS diamond plate. Each location requires a minimum of (1) handrail / handhold per NFPA. eMAX only. | 1462 |
| 3330-0186 | Rear handrails. Locate on rear of the body 3x3 and extend from just above the tailboard to the top of the body on the driver and officer sides. In place of standard 48" handrail. | 498 |
| 3330-0187 | Step rear intermediate. Locate above B1. The step shall be 10" in depth. | 691 |
| 3330-0188 | Hansen green LED body hand rails upgrade package (includes pump module if applicable). | 1503 |
| 3330-0189 | Step rear intermediate embossed treadplate. Locate below fold-a-tank. | 633 |
| 3330-0190 | Step below side intake / discharge panel (PR). Smooth plate aluminum with gator grip painted black durabak. Each location requires a minimum of (1) handrail / handhold per NFPA. eMAX only. | 1382 |
| 3330-0191 | Access ladder. Aluminum extruded ladder with ribbed aluminum extrusion steps located on driver side of pump module offset to the rear. Rear rail to loop up and over to aid in access into/out of dunnage storage pan. | 1812 |
| 3330-0193 | Step rear intermediate. Locate below hosebed includes handrail (in place of horizontal hosebed handrail). | 633 |
| 3330-0194 | Intermediate Step. An 8" deep x 46" wide non-skid aluminum treadplate step with mitered corners shall be installed above the rear panel compartment door opening for ease of access to the upper body area. The step shall include a Bustin tread insert for increased traction and drainage. | 660 |
| 3330-0195 | An 8" deep non-skid aluminum treadplate step with mitered corners shall be installed above the rear panel compartment door opening for ease of access to the upper body area. The step shall include a Bustin tread insert for increased traction and drainage. The width of the step shall be 38" when one rear discharge is selected or 31" when two rear discharges are selected. | 652 |
| 3330-0196 | Additional handrails horizontal above pump panel below upper pump module (1) driver (1) officer side. Mount handrails offset to the rear (just forward of folding steps). | 248 |
| 3330-0197 | Steps NFPA compliant. Fabricated diamond plate steps on driver and officer side of crosswalk. | 457 |
| 3330-0198 | Intermediate rear step to be approximately 10" deep located above the rear compartment and be of embossed aluminum treadplate. | 633 |
| 3330-0199 | Steps below body. Located each side below crosswalk. | 521 |
| 3330-0200 | Step flop down rear 16" wide rung type (PR) IPO pocket step at rear side staircases. | 1065 |
| 3330-0201 | Step rear intermediate embossed tread plate. Locate rear body. Includes hand hold cut-outs on top of the step in place of the hand rail. | 633 |
| 3330-0202 | Intermediate rear step to be approximately 8" deep located at the rear panel and be constructed of embossed aluminum treadplate. | 549 |
| 3330-0206 | Step rear 10" intermediate embossed treadplate. Locate below hosebed includes three (3) hand hold cut-outs on top of the step in place of the hand rail. | 633 |
| 3330-0207 | Hansen blue LED body hand rails upgrade package (includes pump module if applicable). | 1503 |
| 3330-0208 | Rescue body access ladder. Zico model RL18 for increased visibility of rear outboard body mounted DOT/NFPA lighting.. Includes required step lights and additional hand rail(s) if applicable. Location: [#LOC]. | 2328 |
| 3330-0209 | Slide-out platform rollerless. Includes chrome grab handle centered on the front face of the platform (includes hand rail as applicable). Located below tailboard centered and the step area the same width as the access ladder. | 1499 |
| 3330-0210 | Handrail 12". Install 12" handrails on the upper flat section above the speedlays for easier access to the top mount pump panel walkway. | 128 |
| 3330-0211 | Intermediate pump panel step officers side located rearward of the crosslays. Step to be constructed of embossed aluminum treadplate. Includes step lighting (as applicable). Step lights to be switched thru work light switch in cab. | 966 |
| 3330-0212 | (2) Dual lighted LED folding steps. Location: Side by side centered on front pump module access door above walkway to aid pump operator in reaching and operating deck gun from crosswalk area. Includes reinforced 3/16" diamond plate pump access door. Each location requires a minimum of (1) handrail per NFPA. | 389 |
| 3330-0214 | Slidemaster pull out platform shall be mounted in B1 compartment floor. | 1283 |
| 3330-0215 | Step flop down rear 12" wide rung type (PR). Painted Durabak black. | 1346 |
| 3330-0216 | Access ladder. Sure Step V2. Finish: Aluminum. Includes required step lights and additional hand rail(s) if applicable. Location: [#LOC]. | 2699 |

| Item No. | Description | |
|---|---|---|
| 3330-0218 | Step rear 10" deep intermediate. Step to be embossed treadplate and located between engine access door and lower air intake. | 633 |
| 3330-0219 | Step rear intermediate embossed treadplate. Locate below hose bed to extend rearward from body 12 in. and shall include three (3) hand hold cut-outs on top of the step in place of the hand rail. | 693 |
| 3330-0221 | Sides of intermediate rear step to be cut out. | 48 |
| 3330-0222 | Rear landing platform (full width) located below hosebed area. Landing platform to be used for hosebed operations and will be embossed diamond plate. | 893 |
| 3330-0223 | Intermediate rear step to be approximately 10" deep located above the rear compartment and be of embossed aluminum treadplate. Includes side mounted gussets to provide a 500lb weight rating. | 707 |
| 3330-0224 | Handrails 12". Install (2) 12" Hansen white LED lighted handrails on the upper rear top of body forward of the rear unistruts. | 428 |
| 3330-0225 | Folding Step. Step to be located 18" above surface of tailboard and directly below drivers side rear vertical handrail. | 277 |
| 3330-0226 | Step rear intermediate smooth plate painted black Durabak. Locate above B1 includes handrail (in place of horizontal hosebed handrail). | 792 |
| 3330-0228 | Step rear intermediate embossed treadplate. Locate above B1 includes three (3) hand hold cut-outs on top of the step in place of the hand rail. | 633 |
| 3330-0231 | Slide-out platform rollerless to be painted Durabak black. Includes chrome grab handle centered on the front face of the platform (includes hand rail as applicable). Located [#LOC].. | 3746 |
| 3330-0232 | Step below side intake / discharge panel (PR) to be painted Durabak black.. Smmoth plate. Each location requires a minimum of (1) handrail / handhold per NFPA. eMAX only. | 1440 |
| 3330-0235 | Modular diamond plate intermediate steps shall be provided - one step on the driver and officer side of the rear dump valve and one above it. Includes handrails as applicable. | 741 |
| 3330-0236 | Cut-outs in top rear intermediatestep. Includes three (3) hand hold cut-outs on top of the step in place of the hand rail. | 48 |
| 3330-0237 | Handrail 60". Location: (1) each side on driver and officer side pump module forward extrusion vertically mounted. | 571 |
| 3330-0240 | Step staircase access treadplate with Gator Grip. Pair.Locate: Rear of body 1 step each side of staircase for access to staircase from tailboard. | 633 |
| 3330-0245 | LINE-X Package for step below body (each). | 147 |
| 3330-0246 | Slidemaster pull out platform shall be mounted in B1 compartment at compartment break so that the stepping surface when deployed is at same height as the enhanced extended compartment side steps at rear of apparatus. To include center compartment structure as needed to mount and secure slide master slide unit in elevated position. | 1546 |
| 3330-0247 | Handrails full length of hosebed cover door. Total of (2) handrails. Location (1) handrail on inboard side of each hosebed cover door. | 626 |
| 3330-0251 | Intermediate pump panel step drivers side located rearward of the crosslays. Step to be constructed of embossed aluminum treadplate. Includes step lighting (as applicable). Step lights to be switched thru work light switch in cab. Includes (1) handrail at the top of the pump module and (1) at the top of the left side body. | 968 |
| 3330-0252 | Intermediate pump panel step officers side located rearward of the crosslays. Step to be constructed of embossed aluminum treadplate. Includes step lighting (as applicable). Step lights to be switched thru work light switch in cab. Includes (1) handrail at the top of the pump module and (1) at the top of the right side body. | 968 |
| 3330-0254 | Step rear intermediate embossed treadplate. Locate below hosebed includes two (2) hand hold cut-outs on top of the step in place of the hand rail. The cut-outs to be on the left side and center only. | 633 |
| 3330-0255 | Slide-out platform rollerless. Includes chrome grab handle centered on the front face of the platform (includes hand rail as applicable for body mounted locations) and required step lighting. Located R1 as wide as space allows due to exhaust pipe. | 1009 |
| 3330-0256 | Hansen amber LED body hand rails upgrade package (includes pump module if applicable). | 1503 |
| 3330-0258 | Intermediate pump panel step on driver and officer side located above the pump panel but below level of cross lays. Includes step lighting (as applicable). Step lights to be switched thru work light in cab. Steps to be 8in toe depth or greater step surface and shall allow for panel lighting to be mounted under step if applicable or optioned separately. | 963 |
| 3330-0259 | Rear landing platform located above the storage tunnel through tank. Landing platform to be used for hose loading operations and will be embossed diamond plate. | 633 |
| 3330-0260 | Intermediate pump panel step drivers side located rearward of the crosslays. Step to be constructed of embossed aluminum treadplate. Includes step lighting (as applicable). Step lights to be switched thru work light switch in cab. | 966 |
| 3330-0261 | Dual lighted LED folding steps Signature Partners Inc. Each location requires a minimum of (1) handrail per NFPA. Location: Drivers and officers side front compartment faces. | 226 |
| 3330-0262 | Dual lighted LED folding steps Signature Partners Inc rear NFPA. Includes folding steps on driver and officers sides (staggered stepped as applicable with tailboard depth) for NFPA hosebed access and handrails mounted on drivers and officers sides upper hosebed sides (as applicable). | 899 |

| Item No. | Description | |
|---|---|---|
| 3330-0265 | Rear landing platform located below the Ladder Storage Tunnel. Landing platform to be used to assist in hose loading operations and will be embossed diamond plate. | 633 |
| 3330-0266 | Dual lighted rear fixed steps (1) driver side and (1) officer side and handrails mounted each side outboard of the storage compartment doors for additional hose bed access. | 585 |
| 3330-0268 | Step rear intermediate embossed treadplate. Locate on extrusion above rear dump and tank fills includes three (3) hand hold cut-outs on top of the step in place of the hand rail. | 633 |
| 3330-0269 | Dual lighted LED Signature4 folding step. Location: [#LOC]. Each location requires a minimum of (1) handrail per NFPA. | 202 |
| 3330-0270 | Intermediate rear step to be approximately 8" deep x 36" wide located below the hose bed and be of embossed aluminum treadplate. Step to have hand hole cut outs and integral handrail assembly welded into step structure. Formed stainless steel angle braces provided at each end of step for additional support. | 690 |
| 3330-0272 | Additional handrails on pump panel. | 248 |
| 3330-0274 | Ladder Hose Bed access aluminum extrusion and gator grip steps stair case style located on the rear offset to the officer side against inside of rear beavertail. Includes required step lights. | 3319 |
| 3330-0277 | Innovative Controls dual lighted LED folding steps rear NFPA. Includes folding steps on driver side (staggered stepped as applicable with tailboard depth) for NFPA hosebed access and handrail mounted on driver side upper hosebed side (as applicable). | 66 |
| 3330-0278 | Innovative Controls dual lighted LED folding steps rear NFPA. Includes folding steps on officer side (staggered stepped as applicable with tailboard depth) for additional hosebed access and handrail mounted on officer side upper hosebed side (as applicable). | 511 |
| 3330-0279 | Innovative Controls dual lighted LED folding step. Location: [#LOC]. Each location requires a minimum of (1) handrail per NFPA. | 204 |
| 3330-0284 | Hansen red LED body hand rails upgrade package (includes pump module if applicable). | 1503 |
| 3330-0285 | Handrail 18". Location: Officer side above pump panel and below E-One logo. | 192 |
| 3330-0286 | Access ladder. Aluminum access ladder driver side pump module with diamond plate gator grip steps and handrails. Rear rail to loop up and over to aid in access into/out of dunnage storage pan. | 2701 |
| 3330-0293 | Step rear intermediate approximately 8" deep and full width of hosebed. Locate above B1 includes handrail (in place of horizontal hosebed handrail). | 893 |
| 3330-0294 | Diamond plate gator grip overlay to be located on driver side forward compartment top. | 194 |
| 3330-0295 | Diamond plate gator grip overlay to be located on officer side forward compartment top. | 194 |
| 3330-0302 | Slide-out intermediate step. Includes hand hold notch centered on the front face of the step and required step lighting. Located on the rear body. | 1261 |
| 3340-0003 | Cast Products recessed fuel fill with door. | 148 |
| 3340-0004 | Hosebed above the booster tank. Includes forward hosebed and tower(s) cover plate work (as applicable). Hosebed adjustable divider extrusion rearward of the furthest tower is to run full width of the hosebed (as is practical with other hosebed mounted equipment). | 1844 |
| 3340-0005 | Step rear intermediate. Includes folding steps on driver side for NFPA hosebed access and handrail mounted on driver side upper hosebed side (as applicable). | 633 |
| 3340-0015 | Diamond plate single axle wheel well. Includes bolt-on composite wheel well liners and aluminum trim fenderettes. | 1271 |
| 3340-0021 | Compartment Heaters installed in [#LOC]. | 541 |
| 3340-0026 | Diamond plate overlay front body. For Stainless Steel product only. To include the entire front body panels. Do not wrap to the door opening. | 467 |
| 3340-0027 | Diamond plate corner guards for the driver and officer front compartment face. Guards to wrap around the corner and be full height of side assembly or to a max of 96". | 237 |
| 3340-0028 | Stainless Steel corner guards for the driver and officer front compartment face. Guards to wrap around the corner and be full height of side assembly. | 301 |
| 3340-0034 | The hinged door(s) of [#LOC] to have door louvers for additional ventalation. | 184 |
| 3340-0035 | Divider Long. To run full length of hose bed (front to rear). | 561 |
| 3340-0036 | Body compartment interiors to have a swirled finish. Includes pan or hinged door as applicable. | 2389 |
| 3340-0041 | Removable number plate with mounting brackets. Locate [#LOC]. Plate to be painted job color. Lettering and/or graphics not included. | 309 |
| 3340-0045 | (2) driver side roof top compartments. Includes hinged raised compartment lids with turn latches and grab handle(s). Each lid to have (1) bracket mounted LED light and to be wired to door ajar indicator in cab. | 2872 |
| 3340-0049 | Hosebed storage pan. Locate in forward area of hosebed. | 842 |
| 3340-0051 | Reinforce flooring of compartment [#LOC] for storage of heavy equipment. | 369 |
| 3340-0052 | Stainless steel trim on bottom edge of compartment opening of [#LOC]. | 140 |
| 3340-0055 | Cast Products recessed fuel fills with doors for dual fuel fill application. | 502 |
| 3340-0059 | Recessed fuel fills for dual fuel fill application (1) each side in rear wheel wells. | 286 |
| 3340-0060 | Diamond plate corner guards for the driver and officer rear compartment face. Guards to wrap around the corner and be full height of side assembly or to a max of 96". | 269 |
| 3340-0061 | The walls of compartment [#LOC] to have additional louvers for additional ventilation. | 95 |
| 3340-0062 | Divider medium. To run full length of hose bed (front to rear) behind single fill tower. | 503 |

| Item No. | Description | |
|---|---|---|
| 3340-0063 | Divider short. To run full length of hose bed (front to rear) behind dual fill towers or single set back fill tower. | 422 |
| 3340-0067 | Turtle Tile Brand [#COL] Floor Matting covering all applicable Compartment Floors Shelves and Rollout Trays. | 1214 |
| 3340-0068 | Mud flaps rear black with Saulsbury logo. | 187 |
| 3340-0074 | Body mainframe and hosebed side assemblies for a 85" high body. | 1331 |
| 3340-0075 | Body mainframe and hosebed side assemblies for a 90" high body. | 2658 |
| 3340-0076 | (2) officer side roof top compartments. Includes hinged raised compartment lids with turn latches and grab handle(s). Each lid to have (1) bracket mounted LED light and to be wired to door ajar indicator in cab. | 2872 |
| 3340-0077 | Body compartment Interiors to have Zolatone gray finish. To include pan of hinged doors and tool compartments (as applicable). Does not include floors if they are dia plt. | 5976 |
| 3340-0078 | Body compartment Interiors and compartment mounted components (shelves trays toolboardsetc.) to have Zolatone gray finish. To include pan of hinged doors and tool compartments (as applicable). Does not include floors if they are dia plt. | 12676 |
| 3340-0080 | Bolt-on diamond plate 18" tailboard (full width of body). Includes (2) squared off beavertails (no stanchions) with removable outer panels and handrails- (2) vertical on trailing edge of body and horizontal mounted handrail(s) below hosebed. | 1062 |
| 3340-0082 | Bolt-on diamond plate tailboard (full width of hosebed). Includes handrails- (2) vertical mounted on trailing edge of body and horizontal mounted handrail(s) below hosebed. | 800 |
| 3340-0083 | Bolt-on diamond plate tailboard (full width of rear compartment). Includes the enhanced extended side compartment frame work with diamond plate compartment tops (1) officer side lower area folding step. Driver side includes (1) upper hosebed mounted handrail (as applicable) and handrails- (2) vertical on trailing edge of body and horizontal mounted handrail(s) below hosebed. | 948 |
| 3340-0088 | Smooth plate single axle wheel well painted job color. Includes bolt-on composite wheel well liners. | 1841 |
| 3340-0089 | Turtle Tile Brand [#COL] Floor Matting covering all applicable Compartment Floors Shelves and Rollout Trays. | 1957 |
| 3340-0090 | Turtle Tile Brand [#COL] Floor Matting covering all applicable Compartment Floors Shelves and Rollout Trays. | 2664 |
| 3340-0093 | Mud flaps rear black with E-ONE logo. | 186 |
| 3340-0094 | Body mainframe and hosebed side assemblies for a 95" high body. | 3987 |
| 3340-0095 | (2) officer side roof top compartments with extra width to inboard side. Includes hinged raised compartment lids with turn latches grab handle(s) and gas shock hold open and drain line(s) ran to below body. Each lid to have (1) bracket mounted LED light and to be wired to door ajar indicator in cab. | 5739 |
| 3340-0096 | (2) driver side roof top compartments with extra width to inboard side. Includes hinged raised compartment lids with turn latches grab handle(s) and gas shock hold open and drain line(s) ran to below body. Each lid to have (1) bracket mounted LED light and to be wired to door ajar indicator in cab. | 5739 |
| 3340-0097 | Brushed Stainless Steel single axle wheel wells. Includes bolt-on composite wheel well liners and fenderettes. | 1398 |
| 3340-0098 | Stainless Steel single axle wheel wells. Includes job color paint bolt-on composite wheel well liners and fenderettes. | 1738 |
| 3340-0099 | Diamond plate overlay rear body. For Stainless Steel product only. To include the entire rear body panels. Do not wrap to the door opening. | 384 |
| 3340-0102 | Angled (Boston style) style tailboard corners. | 506 |
| 3340-0107 | Diamond plate tandem axle wheel well. Includes bolt-on composite wheel well liners and fenderettes. | 2535 |
| 3340-0109 | Power vent system located in [#LOC]. Includes timer and is run from shorepower inlet. | 219 |
| 3340-0111 | Horizontal ladder bracket. Location and type of ladder: [#LOC]. | 294 |
| 3340-0114 | Hosebed above the booster tank and side body compartments. Includes forward hosebed and tower(s) cover plate work (as applicable) and extended width side to side (over side compartments) for increased hosebed capacity. | 3530 |
| 3340-0115 | Bolt-on diamond plate 16" tailboard (full width of body). Includes (2) squared off beavertails (no stanchions) with removable outer panels and handrails- (2) vertical on trailing edge of body and horizontal mounted handrail(s) below hosebed. | 994 |
| 3340-0116 | Bolt-on diamond plate 14" tailboard (full width of body). Includes (2) squared off beavertails (no stanchions) with removable outer panels and handrails- (2) vertical on trailing edge of body and horizontal mounted handrail(s) below hosebed. | 924 |
| 3340-0117 | Bolt-on diamond plate 12" tailboard (full width of body). Includes (2) squared off beavertails (no stanchions) with removable outer panels and handrails- (2) vertical on trailing edge of body and horizontal (as applicable) mounted handrail(s) below hosebed. | 856 |

| Item No. | Description | |
|---|---|---|
| 3340-0118 | Bolt-on diamond plate 10" tailboard (full width of body). Includes (2) squared off beavertails (no stanchions) with removable outer panels and handrails- (2) vertical on trailing edge of body and horizontal mounted handrail(s) below hosebed. | 785 |
| 3340-0119 | Speedy dry hopper. Locate [#LOC]. Includes discharge chute in compartment directly below roof top compartment with close off valve and extension hose for ground level dispensing. Capacity of speedy dry hopper is 200 lbs. | 1785 |
| 3340-0121 | Full length driver side tunnel. Reduces driver side upper compartment depths to 12" deep IPO 26". Tunnel includes access door at rear. | 1609 |
| 3340-0122 | Half length driver side tunnel. Reduces driver side upper compartment depths of L2 and L3 to 12" deep IPO 26". | 1004 |
| 3340-0124 | Upgrade runningboards to 3/16" diamond plate. | 106 |
| 3340-0125 | Directonal light bar to be recess mounted. Located on rear area of body. | 454 |
| 3340-0127 | Body mainframe and hosebed side assemblies for a 77" high body. | 801 |
| 3340-0128 | Bolt-in partition walls. Locate in lower rear compartment transverse area. Partitions to separate the side rear compartments from the rear compartment. | 267 |
| 3340-0131 | Diamond plate hose storage box. Locate on driver side compartment top. Hosebed side to be the inside edge of box for maximum storage. Use .090 overlay on hosebed side to protect paint and rear 3x3 extrusion. Box to include a 3" radius rear corner removable slat flooring and a cargo net top and rear. | 839 |
| 3340-0132 | Diamond plate single axle wheel well. Includes fenderettes and bolt-on aluminum wheel well liners painted job color. | 2535 |
| 3340-0133 | Officer side beavertail to have recess box (9"w x 14"H x depth of beavertail). Box to be mounted low flush with top of tailboard. | 467 |
| 3340-0135 | Body mainframe and hosebed side assemblies for a 73" high body. | 1863 |
| 3340-0136 | Bolt-on diamond plate 20" tailboard (full width of body). Includes (2) squared off beavertails (no stanchions) with removable outer panels and handrails- (2) vertically on beavertails and (1) horizontally below hosebed. | 1133 |
| 3340-0137 | Body mainframe and hosebed side assemblies for a 92" high body. | 3189 |
| 3340-0139 | Bolt-on diamond plate 18" tailboard (full width of body). Includes (2) slanted beavertails (no stanchions) with removable outer panels and handrails- (2) vertically on trailing edge of body and horizontally mounted handrail(s) below hosebed. | 1327 |
| 3340-0141 | Label package for Memphis units only to include labeling of removable panels to indicate what is behind. | 112 |
| 3340-0142 | Crosslay roller 18". Mount driver side front compartment face just below compartment top. | 171 |
| 3340-0143 | Interior ladder tunnel door. Locate in B1 inline with ladder tunnel thru tank. Hinge to officer side with D-Ring latch and driver side to be notched for cord reel. | 483 |
| 3340-0144 | Stainless Steel floor overlay. B1/R1 full width. | 314 |
| 3340-0145 | Rub rail for the body and pump area module(s). | 854 |
| 3340-0146 | Stainless steel rubrail for the body and pump area module(s). | 1702 |
| 3340-0147 | Louver Guards. All lower body compartment louvers to have protective guard provided on exterior of compartments. Guards to prevent road spray from entering compartments. | 608 |
| 3340-0148 | Body and Cab logos (exterior large and small logos) to be mounted at final inspection. | 854 |
| 3340-0149 | Transverse Module (full width). Locate forward of pump area. Includes a single compartment opening per side (with a shallow lower area and a transverse upper area with diamond plate flooring) and upper area for single stacked double crosslay with backboard storage. | 4497 |
| 3340-0151 | Dri-Dek Brand [#COL] floor matting covering all applicable body compartment floors shelves and rollout trays. | 1874 |
| 3340-0152 | Dri-Dek brand [#COL] floor matting covering all applicable compartment floors shelves and rollout trays. | 2583 |
| 3340-0153 | Hosebed storage pan diamond plate lids (2) lids. Officer side lid to run just under the ladder rack in the stored position. The driver side to be as large as possible with remaining space. Each hinged to rear of pan. Includes (1) gas shock hold open and push-button latches. Included in the pan are vertical "L" shaped partion walls located next to inboard side of fill towers. Seal partitions to keep water from entering from the outboard psoition. | 795 |
| 3340-0154 | Mud flaps rear black with no logo. | 186 |
| 3340-0158 | Underbody splash guard behind rear axle mounted to body. | 600 |
| 3340-0165 | Bracket pac trac jumbolok p/n 1070 PT. To hold (2) pike poles (1) 6ft and (1) 10ft. To be located on officer side compartment top. | 308 |
| 3340-0166 | Partition bolt-in vertical partition wall. Locate in [#LOC]. | 248 |
| 3340-0173 | Backboard storage box. Located in the officer side of the hosebed (full length). Includes vertically hinged door (wired to door ajar) w/push-button latch and composite flooring. Box to hold: (2) backboards. The box to have an open area (top access) to the rear of the backboards in remaining hosebed area. | 572 |
| 3340-0176 | Swirl plate single axle wheel well with clear coat finish. Includes bolt-on composite wheel well liners. | 1952 |

| Item No. | Description | |
|---|---|---|
| 3340-0180 | Brushed stainless steel overlay front body. For Stainless Steel product only. To include the entire front body panels. Do not wrap to the door opening. | 697 |
| 3340-0181 | Each lid to have (1) additional bracket mounted light. This is in addition to light that comes standard for total of (2) lights per compartment. | 173 |
| 3340-0182 | Brushed stainless steel single axle wheel well. Includes bolt-on stainless steel wheel well liners and fenderettes. | 2788 |
| 3340-0184 | Diamond plate box for directional lightbar and (2) GH scene lights. Box to be mounted on 3" x 3" aluminum angle at rear of hosebed storage pan. Lights to be surface mounted to box. | 639 |
| 3340-0185 | Hosebed divider(s) to be notched for hosebed preconnects. Notch to be large enough for divider(s) to be adjustable over preconnects. | 171 |
| 3340-0186 | Recessed storage compartment located between driver side upper and lower compartments. Compartment to hold dealer supplied and installed back up tether and plug. | 463 |
| 3340-0187 | Sign "Stay Back 150 Metres" with black reflective lettering. Locate below rear of body. | 152 |
| 3340-0190 | Diamond Plate Hosebed Storage Pan Cover. Includes (1) D-ring latch and gas shock(s). Hinge to the rear of the hosebed storage pan. Cover to open to 90 degrees. | 1176 |
| 3340-0191 | Divider Support to run full width of hosebed (side to side) at the front of the hosebed and towards the rear of the hosebed at top of the divider(s). Attach to each hosebed divider to provide additional support. | 383 |
| 3340-0192 | Storage box ceiling mounted in transverse of L3/R3. | 506 |
| 3340-0193 | Pumper Body Pump Module and Cab Tags in French to replace standard English E-One supplied Tags. Includes pump panel and multiplex display if applicable. | 1724 |
| 3340-0194 | Bolt-on diamond plate tailboard (full width of rear compartment) for use with low hosebed. Includes driver side (1) upper hosebed mounted handrail (as applicable) handrail(s) mounted horizontally below hosebed and (2) handrails mounted vertically on trailing edge of body. | 948 |
| 3340-0197 | The following compartments to be full height and full depth L1 L2 R1. | 1007 |
| 3340-0198 | Rear diamond plate vertical hinged door on driver side roof top compartments. Includes thumb latch and wiring for door ajar switch. | 206 |
| 3340-0199 | Hosebed storage box for 17' Little Giant Ladder to be vertically stored. Includes vertically hinged door (wired to door ajar) with push-button latch. Located in driver side of hosebed. | 1001 |
| 3340-0200 | Removable slat flooring. Location: [#LOC] | 306 |
| 3340-0207 | Piping cover to be located in compartment [#LOC]. Includes compartment wall cut-outs for piping. | 516 |
| 3340-0210 | Brushed stainless steel overlay rear body. For Stainless Steel product only. To include the entire rear body panels. Do not wrap to the door opening. | 697 |
| 3340-0211 | Painted smooth plate overlay rear body. For Stainless Steel product only. To include the entire rear body panels. Do not wrap to the door opening. | 2148 |
| 3340-0212 | Diamond plate access door in dunnage pan for access to plumbing in pump module. Includes push button latches. | 376 |
| 3340-0213 | L shaped partition located in hosebed to protect the fill towers. | 394 |
| 3340-0214 | Smooth plate outboard beavertail panels (PR). Painted job color. | 600 |
| 3340-0215 | Divider Long. To run full length of hosebed (front to rear). Divider height to half of hosbed depth (top to bottom). For use with low hosebed configurations only. | 561 |
| 3340-0216 | Body mainframe and upper body/hosebed side assemblies for a 90" high body. | 736 |
| 3340-0217 | The upper outboard panels of the speedlay module the wheel well and the rear end upper/lower rearward facing panels to smooth plate overlays. These area are to be seamless and painted job color. | 4803 |
| 3340-0218 | Sign "Stay Back 500FT". White plate with red reflective lettering. Locate low on rear of body / body doors. | 152 |
| 3340-0219 | Body and hosebed storage pan pump access panel package. Includes removable access panels in upper forward area of L1/R1 and a large removable access panel in floor of the hosebed storage pan. | 665 |
| 3340-0220 | Body compartment Interiors to have Zolatone black finish. To include pan of hinged doors (as applicable). Does not include floors if they are dia plt. | 5976 |
| 3340-0221 | Body compartment Interiors and compartment mounted components (shelves trays toolboardsetc.) to have Zolatone black finish. To include pan of hinged doors (as applicable). Does not include floors if they are dia plt. | 12676 |
| 3340-0223 | Stainless Steel corner guards for the driver and officer rear compartment face. Guards to wrap around the corner and be the height of the top of the tail lights. | 287 |
| 3340-0225 | Stair case module (full width of body). Includes large compartment area with lower storage area and upper area dunnage pan. Stair case located to [#LOC]. | 9813 |

| Item No. | Description | |
|---|---|---|
| 3340-0226 | Special hosebed configuration. (1) long divider driver side on top of discharge box 4.25" from hosebed side. (1) short divider officer side on top of discharge box 5.625" from hosebed side. (1) short divider officer side up against discharge box 8.875" from hosebed side. (1) short divider officer side 14.625" from hosebed side. (2) short dividers officer side 14" high (1) divider 21.375" in from hosebed side and (1) divider 28.125" in from hosebed side. Includes bolt-in vertical partition from right side hosebed wall to center divider 84" from rear of hosebed. Remaining area forward of partition to be used for storage area. Includes hinged shelf in hosebed over the (2) 14" high dividers hinged on right side 20" wide x 84" long. Includes hosebed dividers and discharge cover boxes. | 3899 |
| 3340-0227 | Divider Long. To be split for rear mount hosebed application. Main body hosebed divider to be squared on both ends. Rear hosebed divider to have radius end. | 838 |
| 3340-0228 | Storage area for misc. equipment located above the upper speedlay compartment on driver side rear. Includes divider with (2) 6' pike pole with D-Handle and two small shovels (remaining space with pike poles high-approx. 5' foot deep). Includes smooth plate door with push button latch. | 2372 |
| 3340-0229 | Speedy Dry Hopper. Locate [#LOC]. Includes discharge chute in compartment directly below roof top compartment with close off valve and extension hose for ground level dispensing. Capacity of speedy hopper is 50 lbs. | 1339 |
| 3340-0230 | (4) Removable aluminum trays for the rear preconnects. The (2) driver and (1) officer upper trays to hold 200' of 1.75" DJ hose. The (1) officer lower tray to hold 150' of 3" DJ hose (tray will be longer front to rear for capacity). Each tray is removable from the rear of the body and include handhold cut outs on each side (4 total) and (2) handrails mounted side to side and placed 13" back from tray edge. | 1796 |
| 3340-0231 | Nylon black cargo net(s) in interior compartment opening(s) behind lift-up doors of [#LOC]. Cargo net(s) to be held in place at top between two (2) pieces of flat bar through-bolted. Cargo net(s) to be held in place at bottom with twist-locks outboard and snaps inboard. Two (2) velcro straps to be installed: (1) on rear of flat bar and (1) on cargo net to hold in place for compartment access. | 759 |
| 3340-0232 | Directional Lightbar Box. Located on rear area of body between upper rear hosebed side tubes. Box to be diamond plate. | 654 |
| 3340-0233 | Speedy Dry Hopper. Locate roof top compartment above R3. Includes discharge chute in compartment directly below roof top compartment with close off valve and extension hose for ground level dispensing. Capacity of speedy hopper is 68 lbs. | 1394 |
| 3340-0234 | Divider Long. To run full length of hosebed (front to rear). Rear of divider to have cut at 45 degree angle and hand hold cutout at 45 degree angle. | 561 |
| 3340-0235 | Rubrail for the body and pump area module(s). Rubrail for rear of tailboard not included. | 854 |
| 3340-0236 | Center hose bed walkway. Non-slip diamond plate walkway to run full length of hose bed. | 527 |
| 3340-0237 | Speedy Dry Hopper. Locate dunnage pan on officer side. Locate control on officer side pump panel plumbing to terminate approx. 20" above runningboard. Includes 2.5" Akron ball valve to control plow and provide cap. Includes snubber valve control of air to assist feed of speedy dry and a trash screen to in top of hopper. Capacity of speedy hopper is 200 lbs. | 3270 |
| 3340-0241 | Rear diamond plate vertical hinged door on officer side roof top compartments. Includes thumb latch and wiring for door ajar switch. | 206 |
| 3340-0242 | Diamond plate storage box with hinged lid w/push button latches. Located in hosebed storage pan to be approx. 36"W x 60"L x 18"H. | 1864 |
| 3340-0243 | Hose storage tray located on officer side compartment top. Tray to be full length of compartment top and have drainage slots on bottom of tray. Includes cargo net cover. | 1987 |
| 3340-0245 | Nylon black cargo net(s) over exterior compartment opening(s) [#LOC]. Cargo net to be held in place with twist-locks. | 618 |
| 3340-0248 | Hosebed Storage Pan. Locate in forward area of hosebed. Extra width front to back for equipment generator and fill tower storage. | 1681 |
| 3340-0251 | Half length driver side tunnel. Reduces driver side upper compartment depths of L2 and L3 to 12" deep IPO 26". Includes cut-out in hosebed side wall in forward area of L2. Cut-out to forward of Little Gaint sleeve. Includes cover plate with push button latches. | 2303 |
| 3340-0252 | Bolt-in floor R2. Floor is in addition to the existing DP floor. Floor to have 2" raised forward area (tapered towards rear for securing cribbing) and run full length front to rear. | 251 |
| 3340-0253 | Backboard storage compartment. Locate in officer side ladder tunnel. Rack to be approx 2" wide. | 470 |
| 3340-0255 | Hosebed storage pan partition. Partition to seperate the booster reel from rest of pan. | 357 |
| 3340-0258 | A deflector shield will be placed in front of the light tower or A/C system. Construction aluminum diamond plate. Deflector will be in front of the forward most component. | 1058 |
| 3340-0260 | Transverse module (full width and height of body) with lower storage areas and frame width transverse floor (compartment opening 48" wide and same height as main body compartments). Includes open front storage pan to driver side (same depth as staircase storage pan) transverse (front to rear) walkway area (inline with staircase and main body). | 6861 |
| 3340-0261 | Stair case module (full width of body). Includes large compartment area with lower storage area and upper area open back storage pan. Stair case located to [#LOC]. | 9813 |

| Item No. | Description | |
|---|---|---|
| 3340-0264 | License plate sized number plate. Locate in license plate bracket(s). Plate to be painted job color. Lettering and/or graphics not included. | 240 |
| 3340-0265 | Diamond plate fill tower deflector. Locate around fill tower located in hosebed storage pan. To be four sided and bolt-in for removing and to be height of pan. | 376 |
| 3340-0271 | Nylon black cargo net in interior compartment opening behind door(s) of [#LOC]. Cargo net to be mechanically attached to bottom of compartment opening and bungee cords in the top corners. | 618 |
| 3340-0272 | Sign "Stay Back 500FT" with black reflective lettering. Locate B1 door above D-ring. | 152 |
| 3340-0276 | Hosebed divider(s) to be notched. Notch(es) to be 24" wide x 24" high at the upper front corner of the divider(s). | 296 |
| 3340-0279 | Hosebed above the booster tank. Includes forward hosebed with notch for boom support deflector for boom support and tower(s) cover plate work. Hosebed adjustable divider extrusion rearward of the furthest tower is to run full width of the hosebed. | 1844 |
| 3340-0280 | Divider Long. To run full length of hosebed (front to rear). Locate on top of hard suction storage in hosebed. | 561 |
| 3340-0284 | The hosebed divider(s) to be notched on the rearward end for nozzle(s). | 296 |
| 3340-0285 | Bolt-in partition wall. Locate in centered (front to back) in driver side roof top compartment. | 370 |
| 3340-0290 | Full width partition(s) located in hosebed rearward of the fill tower(s). | 604 |
| 3340-0291 | Removable number plate with mounting brackets. Locate [#LOC]. Plate to be painted job color. Plate to be 8"W x 20"H. Lettering and/or graphics not included. | 438 |
| 3340-0292 | Smooth plate single axle wheel well painted job color. Includes bolt-on composite wheel well liners. Wheel well plate(s) to be flush mounted. | 4256 |
| 3340-0293 | Crosswalk and Speedlay module compartment Interiors to have Zolatone gray finish. Does not include floors if they are dia plt. | 804 |
| 3340-0294 | Recessed fuel fill officer side wheel well. | 335 |
| 3340-0299 | Transverse module (full width and height of body) with lower storage areas (compartment opening 67" wide and same height as main body compartments). Includes full width forward storage pan and a pan in the rearward center/officer area between the driver roof top compartment. Transverse floor to run full width. Rear headboard to have area for routing of plumbing for preconnects located in rearward area. | 8067 |
| 3340-0305 | Body mainframe and hosebed side assemblies for a 90" high body. Includes modifications for 4x4 and plumbing applications as required. | 3321 |
| 3340-0306 | Speedy Dry Hopper. Locate [#LOC]. Includes discharge chute in compartment directly below roof top compartment with close off valve and extension hose for ground level dispensing. Capacity of speedy hopper is 100 lbs. | 1785 |
| 3340-0309 | Sign "Keep Back 300FT". White plate with red reflective lettering. Locate on rear ladder access door. | 152 |
| 3340-0313 | Locate Foam Fill Tower in the hosebed storage pan. Water Fill Tower located in the hosebed. | 485 |
| 3340-0319 | Bolt-on diamond plate 10" tailboard (full width of body). For use with rear ladder application. Includes handrails- (1) vertical on trailing edge of body opposite side of ladder and handrail(s) horizontal below hosebed. | 1023 |
| 3340-0320 | Locate Tank Fill Tower(s) in the hosebed area. For use with hosebed storage pan for max storage pan capacity. | 855 |
| 3340-0321 | Driver side hosebed storage box. Storage box to hold (3) pike poles and (3) backboards. Pike poles to be stored down low. Backboards to be stored up high with dividers seperating storage for each board. Includes vertically hinge hinged door (wired to door ajar) with D-ring latch. | 1506 |
| 3340-0322 | Diamond plate deflector shield for Light Tower. Deflector to be mounted to forward area of hosebed storage pan. Includes cross mounting structure in hosebed storage pan for Light Tower mounting. | 1449 |
| 3340-0323 | Partitions to seperate the side rear compartments from the rear compartment to be pop riveted into place. | 63 |
| 3340-0324 | Body mainframe and hosebed side assemblies for a 98" high body. | 4785 |
| 3340-0327 | Heat Pan for rear mount pump application. Includes notching for tow eyes and rear hitch receiver (as applicable). Pan to not interfere with the connections of any towing hooks. | 2398 |
| 3340-0335 | Door pass thru. A Cast Products Inc. CPI sealed pass thru door shall be provided. There will be a sealed pass thru from the outside of the truck to the inside for wires. Opening size 5-1/2"T x 5-5/8"W. Locate [#LOC]. | 148 |
| 3340-0341 | Diamond plate raised cover with rubber hold-downs. Locate forward area of dunnage pan above transverse compartment. Hinge forward and wire to door ajar incicator in cab. Includes (1) bracket mounted LED light. | 593 |
| 3340-0343 | Body mainframe and hosebed side assemblies for a 95" high body. Includes height of rear body/pump module. | 1331 |
| 3340-0344 | Hosebed above the booster tank and rear pump. Includes forward hosebed and tower(s) cover plate work (as applicable). Hosebed adjustable divider extrusion rearward of the furthest tower is to run full width of the forward hosebed. | 1844 |

| Item No. | Description | |
|---|---|---|
| 3340-0345 | Hosebed above the booster tank and rear pump. Includes forward hosebed and tower(s) cover plate work (as applicable). Hosebed adjustable divider extrusion rearward of the furthest tower is to run full width of the hosebed. | 1318 |
| 3340-0348 | Divider Short. To be split for rear mount hosebed application. Main body hosebed divider to be squared on both ends. Rear hosebed divider to have radius end. | 726 |
| 3340-0349 | Divider Medium. To be split for rear mount hosebed application. Main body hosebed divider to be squared on both ends. Rear hosebed divider to have radius end. | 781 |
| 3340-0350 | Hosebed Storage Pan (24" front to rear). Locate in forward area of hosebed. | 510 |
| 3340-0351 | Hosebed Storage Pan (40" front to rear). Locate in forward area of hosebed. | 842 |
| 3340-0352 | Special hosebed configuration. To have the following dividers: (4) 14" high long dividers (1) short (1) medium and (2) long standard height dividers and storage for (1) hardsuction with drop down door with bumpers wired to door ajar (do not shorten hosebed handrail length). Provide hosebed slats above storage with (1) adjustable divider. Reference layout in file. | 6308 |
| 3340-0357 | Body mainframe and hosebed side assemblies for a 85" high body. Includes modifications for 4x4 and plumbing applications as required. | 1663 |
| 3340-0358 | Backboard storage sleeve for (1) board. 4"H x 20"W x 76"L. Includes (2) retaining straps (1) each side for boards. Location: Horizontally mounted through L3/B1/R3. | 773 |
| 3340-0359 | Backboard storage box. Located in [#LOC]. Includes sanded smooth plate exterior with smooth plate interior with (1) velcro strap on each end. Sized to hold (3) backboards and spaced 3" per space. | 853 |
| 3340-0360 | Access panel on back wall of compartments L3 and R3 for access to the jet dump and rear tank inlet plumbing. | 303 |
| 3340-0362 | Black Dri-Deck flooring to be installed on floor of the backboard storage hosebed storage pan and both medical cabinets. | 1382 |
| 3340-0363 | Hosebed Storage Pan. Locate in forward area of hosebed. Pan to be 30" wide. | 1085 |
| 3340-0364 | Diamond Plate Hosebed Storage Pan Cover. Cover to be split due to ladder rack for access when in stowed position. Includes D-ring latches and gas shock(s). Hinge to the rear of the hosebed storage pan. | 1780 |
| 3340-0365 | Hosebed deflector divider. Locate to driver side rear of hosebed forward of deck gun. Deflector to only cover the forward and side of the deck gun piping. Rear area fo hosebed to be open for access from driver side rear. | 375 |
| 3340-0367 | Sign "NO STEP". White vinyl background with red reflective lettering. Locate (1) each forward and rearward on each of the hosebed cover doors. | 152 |
| 3340-0370 | Body mainframe and hosebed side assemblies for a 80" high body. Includes modifications for 4x4 and plumbing applications as required. | 335 |
| 3340-0371 | Crosswalk module compartment Interiors to have Zolatone gray finish. Does not include floors if they are dia plt. | 403 |
| 3340-0373 | The R1 compartment to have smooth plate floor and compartment walls to be non-louvered. | 319 |
| 3340-0374 | Sign "Stay Back 300FT" with black reflective lettering. Locate below rear of body. | 152 |
| 3340-0376 | Diamond plate single axle wheel well. Includes fenderettes and bolt-on aluminum wheel well liners sanded finish. | 2292 |
| 3340-0382 | Body main frame and hose bed side assemblies for a 78" high pumper body. | 1209 |
| 3340-0383 | Body main frame and hose bed side assemblies for an 83" high pumper body. | 1331 |
| 3340-0384 | Body main frame and hose bed side assemblies for an 88" high pumper body. | 2658 |
| 3340-0385 | Body main frame and hose bed side assemblies for a 93" high pumper body. | 3987 |
| 3340-0386 | Mateflex brand [#COL] floor matting covering all applicable compartment floors shelves and roll-out trays. | 1957 |
| 3340-0387 | Full width of hose bed stainless steel transverse storage divider. Located in forward area of hose bed to separate equipment items such as generator etc. from the main storage area. Main hose bed dividers will be located rearward of the transverse divider. | 842 |
| 3340-0388 | Brushed stainless steel rubrails for the sides of the body below the lower side compartments. | 854 |
| 3340-0389 | Stainless steel rear fender panels painted job color. (Recommended for FRP paint process compatibility!) Includes bolt-on stainless steel inner wheel well liners (not painted) and polished stainless steel outer fenderettes. | 1841 |
| 3340-0390 | Stainless steel rear fender panels with aluminum treadplate overlays IPO painted finish. Includes bolt-on stainless steel wheel well liners (not painted) and polished stainless steel outer fenderettes. | 1398 |
| 3340-0391 | Body mainframe and hosebed side assemblies for a 83" high body. | 1331 |
| 3340-0392 | Underbody full width mudflap behind rear axle (as applicable) mounted to body. | 707 |
| 3340-0394 | Hosebed Storage Pan (36" front to rear). Locate in forward area of hosebed. | 759 |
| 3340-0395 | Pike pole storage box. Located in the officer side of the hose bed (full length). Includes vertically hinged door (wired to door ajar) w/push-button latch. Box to hold: (4) 10' pike poles. | 1550 |
| 3340-0396 | A deflector shield will be placed in front of the light tower or A/C system. Deflector will be in front of the forward most component. Deflector will be painted [#COL]. | 1318 |
| 3340-0403 | Diamond plate side dump panels. Includes lift-up diamond plate doors with spring loaded hinges. | 510 |

| Item No. | Description | |
|---|---|---|
| 3340-0404 | Smooth plate side dump panels. Includes lift-up smooth plate doors with spring loaded hinges. Smooth plate panels painted job color. | 970 |
| 3340-0405 | Sign "STAY BACK 500 FEET" with black reflective lettering. Locate below rear of body. | 152 |
| 3340-0406 | Sign "Stay Back 150 Metres" with black reflective lettering. Locate below rear of body. | 152 |
| 3340-0407 | Hosebed above the booster tank. Hosebed assembly to be 3-piece design due to stepped hosebed. Includes forward hosebed and tower(s) cover plate work (as applicable). Hosebed adjustable divider extrusion rearward of the furthest tower is to run full width of the hosebed. | 2447 |
| 3340-0408 | Adjustable ladder brackets. Locate in  track [#LOC]. | 555 |
| 3340-0409 | Adjustable tracks (pair). Locate tracks to [#LOC] assembly. For use with ladder and/or hard suction rack(s). | 219 |
| 3340-0412 | Bolt-on diamond plate 24"  tailboard (full width of body). Includes (2) squared off 12" deep beavertails (no stanchions) with removable outer panels and handrails- (2) vertical on trailing edge of body and horizontal mounted handrail(s) below hosebed. For use with swivel style rear tank dump only. | 1252 |
| 3340-0413 | Wheel Chocks 44" NFPA Complaint - Pair of Zico SAC-44. Up to 44" diameter Tires. Includes mounting bracket. Locate [#LOC]. | 735 |
| 3340-0414 | Body main frame and 46" wide hose bed for a 90" high rescue pumper body. | 2658 |
| 3340-0415 | Body main frame and 46" wide hose bed for a 97" high rescue pumper body. | 3987 |
| 3340-0416 | Removable number plate with mounting brackets. Locate driver side outboard of B1. Plate to be painted job color. Plate to be 10"W x 10"H. Lettering and/or graphics not included. | 309 |
| 3340-0417 | Removable number plate with mounting brackets. Locate driver and officer side of the cab below canopy window. Plate to be painted job color. Plate to be 12"W x 12"H. Lettering and/or graphics not included. | 309 |
| 3340-0420 | Smooth plate panels of body interior compartments to have zolatone (gray) finish. | 4070 |
| 3340-0455 | Reinforce compartment [#LOC] for storage of heavy equipment. The compartment to be capable of storing up to 1000lbs of equipment. | 369 |
| 3340-0460 | Body main frame and hose bed side assemblies for a 78" high body with low hose bed and "L" shaped water tank. | 1510 |
| 3340-0461 | Body main frame and hose bed side assemblies for an 83" high body with low hose bed and "L" shaped water tank. | 1813 |
| 3340-0467 | Roof top compartment Interiors to have Zolatone gray finish. | 2159 |
| 3340-0470 | The outboard panels of the roof top compartments or full width hosebed as applicable to be smooth plate overlays. These areas are to be seamless and painted job color. | 2990 |
| 3340-0472 | Compartment floors to be flush for sweep out. | 706 |
| 3340-0482 | Roof top compartments on driver and officer side to have 1" drain holes with tubing and plugs. | 303 |
| 3340-0483 | Divider Long. To run full length of hose bed (front to rear). Divider 3/4 height of hose bed depth (top to bottom). For use with low hose bed configurations only. | 561 |
| 3340-0485 | Body mainframe and hosebed side assemblies for a 95" high body. Includes modifications for 4x4 and plumbing applications as required. | 4784 |
| 3340-0486 | Diamond plate single axle wheel well. Includes bolt-on composite wheel well liners and bolt-on polished alum fenderettes. | 1151 |
| 3340-0488 | Divider long for use with hosebed preconnect. Divider to be set back and/or notched at forward area of hosebed for access to preconnect line connection. | 561 |
| 3340-0494 | Rubrail for the body. | 854 |
| 3340-0499 | Storage area to officer side of center hosebed divider. Area to include (from driver to officer side): (1) 10" H x 10" W. This includes (1) divider with square ends and hosebed style top. Remaining are to be for horizontally stored backboards (2). Area to be 6" H x remaining hosbed width with a hosebed style top (full length of hosebed).Each storage area to have a drop down diamond plate door with push button latching and each wired to door ajar indicator in cab. | 727 |
| 3340-0500 | [#LOC] compartment walls are  to be non-louvered. | 264 |
| 3340-0509 | The outboard panels of the roof top compartments to be smooth plate overlays. These areas are to be seamless and painted job color. | 2990 |
| 3340-0511 | Bolt-in partition walls. Locate in lower rear compartment transverse area. Partitions to seperate the L3 compartment from the rear compartment. | 134 |
| 3340-0512 | I-Zone brackets mounted on driver and officer rear body compartment face up high. Includes 14" removable poles with keeper pins. | 259 |
| 3340-0514 | Compartment R1 to have no louvers. Requires roll-up door application. | 123 |
| 3340-0516 | Storage Pan Hot Shot II Hydraulic Reservoir.  Includes a hinged lid with gas shock hold open. | 842 |
| 3340-0519 | Removable number plate with mounting brackets. Locate [#LOC]. Plate to be painted job color. Plate to be 12"W x 12"H. Lettering and/or graphics not included. | 322 |
| 3340-0520 | Smooth plate single axle wheel well painted job color. Includes bolt-on composite wheel well liners and bolt-on polished alum fenderettes. | 1723 |
| 3340-0521 | All body and pump module compartments (if applicable) and/or storage areas to have no louvers or vents. | 303 |
| 3340-0526 | Hose bed storage pan to extend forward over eMAX transverse storage area(s). | 357 |
| 3340-0527 | 2x2 angle to be located full width of opening of compartment L2. | 197 |

| Item No. | Description | |
|---|---|---|
| 3340-0530 | Removable number plate with mounting brackets. Locate [#LOC]. Plate to be painted job color. Plate to be 12"W x 8"H. Lettering and/or graphics not included. | 294 |
| 3340-0543 | Transverse sleeve thru backwall of compartments L1 and R1. Transverse area to be approx. 32" wide x 18" high x 47" deep. | 837 |
| 3340-0555 | Roof top compartments to have raised push button latches in place of turn latches. | 372 |
| 3340-0560 | Rolled hose rack for (4) hose rolls. Includes (3) adjustable dividers to be 18" high x 24" deep each with adjustable tracking on floor. Locate in floor of L1 compartment. | 662 |
| 3340-0562 | Universal air pack bottle bracket installed on backwall of compartment [#LOC]. | 171 |
| 3340-0567 | Underbody UltraGuard splash guard behind rear axle mounted to body. | 600 |
| 3340-0576 | Mateflex brand [#COL] floor matting covering all applicable compartment floors shelves and roll-out trays. | 1184 |
| 3340-0577 | Bolt-in partition wall. Located forward of electric cord reels in driver and officer side roof top compartments. | 248 |
| 3340-0578 | Bolt-on trim panels to be installed over the side walls extrusions of the driver and officer side roof top compartments. | 933 |
| 3340-0579 | Provide (2) two inch conduits with pull wires in them for dealer/customer installed equipment. Locate (1) from driver side forward roof top compartment to the hydraulic ports on the front bumper and (1) from driver side forward roof top compartment to the hydraulic ports in the B1 compartment. | 492 |
| 3340-0585 | Ladder storage box. Located in the driver side of the hosebed. Includes vertically hinged door (wired to door ajar) w/push-button latch and composite flooring. Box to hold: (1) Alco-lite CJL-12 ladder. Deletion of aluminum hose bed cover center divider notch may be required as applicable. | 707 |
| 3340-0586 | Storage pan over eMAX transverse storage area(s). | 503 |
| 3340-0588 | Slip-on painted steel dump elbow and 36" straight extension chute. Includes body mounted removable support arm and mounting brackets at rear of body for elbow and straight chute. | 1466 |
| 3340-0589 | Body main frame and 46" wide hose bed for a 83" high rescue pumper body. Intended for use with overhead ladder rack and stay under 10' OAH. | 2658 |
| 3340-0591 | Hose bed bulkhead divider stainless. | 625 |
| 3340-0597 | Handrail to be mounted between stanchion posts. Stanchion post be 6" high and set back 11" from back of body. | 555 |
| 3340-0599 | Hosebed storage box. Located in the driver side of the hosebed. To hold (2) backboards (2) 10' pike poles and (1) 10' attic ladder with access from a vertically hinged diamond plate door (wired to door ajar) with a push-button latch. | 1681 |
| 3340-0600 | Bolt-in partition walls. Locate in lower rear compartment transverse area. Partitions to seperate the R2 compartment from the rear compartment. | 134 |
| 3340-0602 | Diamond plate side dump panels. Includes drop-down diamond plate doors with counter balanced actuation. | 747 |
| 3340-0603 | Removable number plate with mounting brackets. Locate [#LOC]. Plate to be painted lower job color (if cab is painted two tone). Plate to be 8"W x 14"H. Lettering and/or graphics not included. | 322 |
| 3340-0605 | Removable number plate with mounting brackets. Locate [#LOC]. Plate to be painted upper job color (if cab is painted two tone). Plate to be 14"W x 8"H. Lettering and/or graphics not included. | 322 |
| 3340-0614 | [#COL] edge trim for floor mounted Turtle Tile matting. Locate on door opening side only. Requires seperate floor matting option. | 427 |
| 3340-0615 | Pan mounted diamond plate 3 sided generator shield. Includes partition in storage pan for driver side wall. | 1058 |
| 3340-0616 | Tool air system. Includes 6000 PSI DOT cyl bottle rack fill panel. Rack located driver side roof top compartment. Fill panel adjacent to breaker box In L1. | 5359 |
| 3340-0617 | The following items to be sanded smooth plate painted with black Scorpion coating place of standard diamond plate: Compartment tops roof top compartment lids hosebed storage pan transverse module storage pan aluminum hosebed covers tailboard rear intermediate steps transverse module running boards. | 3523 |
| 3340-0623 | There shall be a compartment below side dumps it will include a vertically hinged access door (one each side) below the side dumps with push button latch. Doors to match dump panel material. Compartment dims to be approximately 15" high x 24" wide x 26" deep. | 315 |
| 3340-0626 | Body mainframe and hosebed side assemblies for a 94" high body. | 3987 |
| 3340-0630 | Upper hosebed above the upper section of the booster tank. Includes forward hosebed cover plate work and modifying hosebed storage pan to be 39" wide above upper section of booster tank. | 1180 |
| 3340-0631 | Removable number plate with mounting brackets. Locate [#LOC]. Plate to be painted body job color. Plate to be 8"W x 14"H. Lettering and/or graphics not included. | 322 |
| 3340-0632 | Body main frame and 59" wide hose bed for a 90" high rescue pumper body. | 2658 |
| 3340-0633 | Removable Poly hose bed storage tray (EA). The floor of the tray(s) to be slotted to prevent the accumulation of water and allow for ventilation of wet hose. | 612 |
| 3340-0635 | Mud flaps in front of rear wheels black with no logo. Install additional row of fasteners close to bottom of wheel well. | 245 |

| Item No. | Description | |
|---|---|---|
| 3340-0636 | Fill Tower support bracket to be held 1/4" back from fill tower and attached to front hosebed wall. | 133 |
| 3340-0637 | Cover plates around rear frame mounted tow eyes in B1 compartment. | 133 |
| 3340-0638 | Bolt-in partition wall. Located rearward of air cord reel in officer's side roof top compartment. | 248 |
| 3340-0639 | Front of hose bed stainless steel partial storage divider on officer side for selected accessory such as a generator. Located in forward area of hose bed to separate the storage area from the main hose storage area. Applicable main hose bed dividers will be located rearward of the partial divider. | 894 |
| 3340-0641 | Removable number plate with mounting brackets. Locate [#LOC]. Plate to be painted upper cab job color. Plate to be 5.5"H x 11"W. Lettering and/or graphics not included. | 322 |
| 3340-0643 | Stainless steel trim for lower edge of rear mudflap (PR). The trim shall be 2" in height and go full width of the mudflap. The material shall be "polished" stainless steel and it will be mounted to the lower edge of the rear (back side) of the mudflaps. | 356 |
| 3340-0644 | Flooring plate additional in L2 and R2 compartments. 3/16" aluminum smooth plate to be bolted in place 1/2" above standard diamond plate compartment floors. | 177 |
| 3340-0646 | (2) officer side roof top compartments with extra width to inboard side. Includes hinged raised compartment lids ("embossed" treadplate) with turn latches grab handle(s) and gas shock hold open and drain line(s) ran to below body. Each lid to have (1) bracket mounted LED light and to be wired to door ajar indicator in cab. | 5798 |
| 3340-0647 | Roof top compartment doors shall have larger latches installed (Southco model C5-11-15 latch C5-82 gasket) in place of standard. | 256 |
| 3340-0650 | Fill tower partition. "U" shaped partition to be located around water fill tower and extend rearward to bolt to rear surface of storage pan. This 1/8" diamond plate "hat" section shall provide fill tower protection within the hose bed. | 364 |
| 3340-0651 | Piping cover where visible for discharge piping above pump enclosure to front of hose bed (each). Cover to be stainless steel to blend with surrounding area. | 541 |
| 3340-0652 | Stainless steel trim for lower edge of front mudflap (PR). The trim shall be 2" in height and go full width of the mudflap. The material shall be "polished" stainless steel and it will be mounted to the lower edge of the rear (back side) of the mudflaps. | 356 |
| 3340-0653 | Diamond plate tandem axle wheel well. Includes bolt-on composite wheel well liners and bolt-on polished alum fenderettes. | 2300 |
| 3340-0662 | Recessed fuel fill with flat latching stainless steel door. Door style to match SCBA doors. | 310 |
| 3340-0664 | Backboard storage box. Located in the officer side of the hosebed. To hold (1) backboard with access from a vertically hinged diamond plate door with a lift and turn latch. The box to only run the length of the backboards. | 572 |
| 3340-0666 | Mounting for directional light bar. Located on rear area of body below upper or intermediate step. | 138 |
| 3340-0673 | Storage box with (2) drop down doors. Diamond plate box to be approx. 136" long x 12" high x 12" deep mounted on officer side compartment top between hosebed side tubes. Includes hinged drop down doors with locking D-ring latches (wire to door ajar). | 1067 |
| 3340-0675 | The outboard panels of the rear body to be smooth plate overlays. These areas are to be seamless and painted job color. | 2961 |
| 3340-0683 | Hosebed storage pan. Locate in forward area of hosebed. Pan depth shall be approximately 18". | 1188 |
| 3340-0690 | Slide-out Speedy Dry Hopper. Tray mounted to floor mounted tray that is located in R3 forward. Capacity of hopper is 100 lbs. (Tray not included which must be selected separately.) | 1785 |
| 3340-0695 | Soda ash hopper. Locate [#LOC]. Includes discharge chute in compartment directly below roof top compartment with close off valve and extension hose for ground level dispensing. The hopper shall be constructed of stainless steel holding capacity shall be 200 lbs. | 2405 |
| 3340-0697 | Power vent system located in [#LOC]. Wired through receptacle in compartment. | 221 |
| 3340-0699 | Bolt-on cover plate over upper section of water tank to be embossed diamond plate. | 642 |
| 3340-0702 | Hosebed storage box. Located in the driver side of the hosebed. To be 76" long X 25" wide X hosebed depth. Box to have diamond plate top with approx. 4" upper. 4" middle and 8" lower storage space. Includes a vertically hinged diamond plate door (wired to door ajar) with a push-button latch.Hinge door to outside. | 1681 |
| 3340-0703 | Diamond plate box for directional lightbar. Box to be mounted on 3" x 3" aluminum angle at rear of hosebed decking. Includes two (2) Whelen M6 Super LED scene lights to be surface mounted to box outboard. | 1477 |
| 3340-0707 | Upper right side of body to be notched to allow hydraulic overhead ladder rack to be lowered for reduced travel height. Compartment opening height to remain std. | 1751 |
| 3340-0708 | The outboard panels of the driver side roof top compartments to be smooth plate overlays. These areas are to be seamless and painted job color. | 1497 |
| 3340-0709 | Vertical handrails as mounted the rear body shall extend full height from the bottom of the body to the top of the body IPOS (as practicality permits). | 150 |

| Item No. | Description | |
|---|---|---|
| 3340-0710 | Transverse storage modification affecting L3 B1 and R3 compartments to accommodate a transverse storage area running from L3 to R3 (lower area only). The transverse tunnel area shall be approximately the full depth of the B1 compartment the compartment opening height shall start approximately 2" above the floor to maximum height available (height may be reduced as required depending upon the rear body storage tunnel foot print). The B1 compartment side walls will be opened (removed) as part of the transverse modifications necessary. | 1252 |
| 3340-0713 | Diamond plate deflector shield for Light Tower. Deflector to be mounted on driver side compartment top at front of body. See photos on file. | 455 |
| 3340-0714 | Bolt-in floor [#LOC]. Floor is in addition to the existing DP floor. Floor to have 2" raised forward area (tapered towards rear for securing cribbing) and run full length front to rear. | 251 |
| 3340-0716 | Bolt-in SS floor taper [#LOC]. Floor taper is in addition to the existing stainless steel floor. Floor to have 1.5" raised outer area (tapered towards back wall for securing cribbing) and run full length side to side. | 251 |
| 3340-0720 | Slip-on painted steel dump elbow and 36" straight extension chute. Includes body mounted removable support arm and mounting brackets in compartment [#LOC] for elbow and straight chute. | 1466 |
| 3340-0723 | All compartment floors to have Zolatone gray finish. Includes changing floors from diamond plate to smooth plate. | 2073 |
| 3340-0725 | Rear vertically hinged door for the officer's side roof top compartment. The door includes thumb latch(s) and wiring for the door ajar switch. The material shall be 1/8" aluminum smooth plate and the hinge shall be placed outboard. | 138 |
| 3340-0726 | Nylon black cargo net for interior compartment opening of compartment [#LOC]. Cargo net to have custom designed one-piece bar assembly and one step Velcro attachment process with footman loops shall be used opposite the bar end. | 342 |
| 3340-0727 | Body main frame and hose bed for a 85" high stainless steel eMAX rescue pumper body. | 1683 |
| 3340-0728 | Body main frame and hose bed for a 90" high stainless steel eMAX rescue pumper body. | 3240 |
| 3340-0729 | Body main frame and hose bed for a 95" high stainless steel eMAX rescue pumper body. | 4864 |
| 3340-0730 | Smooth plate corner guards for the driver and officer front and rear compartment faces. Guards to wrap around the corner and be full height of side assembly or to a max of 96". Corner guards to be painted black durabak. | 1021 |
| 3340-0731 | Access panels thru B1 interior officer side and into rear of R4. Service access rear of fill station controls. Access panel to be sized as large as possible to accommodate sevice operations. | 523 |
| 3340-0736 | Body main frame and hose bed side assemblies for an 83" high body with low hose bed and "L" shaped water tank. No upper rear crossover hand rail. | 1582 |
| 3340-0737 | Body mainframe and hosebed side assemblies for a 100" high body. | 5313 |
| 3340-0738 | A landing platform (10" in depth the width shall be sized and positioned as required with overall rear end configuration) with embossed diamond plate surface will be centrally located at the upper rear of the apparatus to assist with hose bed cover operations. | 412 |
| 3340-0739 | Turtle Tile brand floor matting covering driver and officer roof top compartment floors full length and width. Color: [#COL]. | 692 |
| 3340-0740 | Divider shroud for cab tilt pump bolt in R1. | 208 |
| 3340-0742 | Hose bed walkway offset to driver side. Non-slip diamond plate walkway to run full length of hose bed. | 527 |
| 3340-0743 | Backboard Storage sleeve. Located in the officer side hard suction storage compartment. Sleeve to hold (1) backboard 2"H x 16" W x 73" L. Includes stop bracket approximately 74" back from opening. | 470 |
| 3340-0744 | Full width hosebed above the booster tank from the driver side extra wide roof top compartments to the officer side with raised side assemblys. | 2036 |
| 3340-0745 | Divider Support to run full available width of hosebed (side to side not including hosebed walkway) at the front of the hosebed and at the rear of the hosebed at top of the divider(s) even with the top of the hosebed. Position inboard divider to be utilized as a walkway sidewall and add an aluminum angle bracket along the length of the divider on the hosebed side to facilitate mounting of twist-lock fasteners for the hosebed cover. | 504 |
| 3340-0746 | CTECH Brand 4 drawer compartment toolbox unit in [#LOC]. Includes Cal Gray drawer face finish with two (2) 8" drawers below and two (2) 3" drawers above to mount in an available compartment opening. Toolbox dimensions to fit in an opening 39.5" W X 23.0" H X 24". Requires a fixed shelf mounted above toolbox enclose top drawer and to create opening height added separately. | 2232 |
| 3340-0747 | Compartment heater as high as possible on forward wall. Includes switch on driver overhead. Location: [#LOC]. | 1361 |
| 3340-0749 | Directional light bar box. Located on rear area of body between upper rear hose bed Unistruts. Box to be .125" diamond plate and mounted to structural stainless steel framework including Unistrut channel for hose bed divider attachment. SS product only. | 2583 |
| 3340-0750 | Four (4) divider supports to attach to each top rear edge of each hose bed divider to provide additional support. Ship loose for dealership installation. SS product only. | 276 |

| Item No. | Description | |
|---|---|---|
| 3340-0752 | Embossed diamond plate in place of ALL standard and optioned diamond plate on body and modules. | 1599 |
| 3340-0754 | Hosebed storage pan constructed of 3/16" (.187") aluminum smooth plate with black Scorpion coating (rough finish) IPOS diamond plate. Locate in forward area of hosebed. | 1069 |
| 3340-0757 | Floor overlay [#LOC]. The overlay shall be constructed of 1/8" treadplate and shall be raised at the interior wall 1" providing a sloped floor (low point at the door opening). | 425 |
| 3340-0758 | Speedy dry hopper. Locate [#LOC]. Includes discharge chute in compartment directly below roof top compartment with close off valve and extension hose for ground level dispensing. Capacity of speedy dry hopper is 180 lbs for a shorter upper body (less than 19"). | 1785 |
| 3340-0767 | Dividers bolt in Qty (2) for transverse compartment. Location between L3/R3. One (1) divider to be located 26 inches deep from L3 and one 28 inches deep R3 door opening so as to generate a compartment located over chassis centerline. | 1080 |
| 3340-0771 | Special hose bed divider height and reinforcement. The height of the hose bed divider from driver to officer side: 1st divider 36"T 2nd divider 30"T. Each divider shall have a round reinforcement welded in place on the forward and rear vertical edges and the top horizontal edges to stiffen the dividers as mounted. | 281 |
| 3340-0772 | Rear wheel well trim shall be added to both sides of the unit. Diamond plate 1/16" thick shall be added to the 4" extrusion that surrounds the wheel well. The extrusion forward rear and on top of the wheel well shall have a diamond plate overlay added. | 230 |
| 3340-0775 | Stokes basket storage box for a Ferno Washington model 71. The storage box shall be made from diamond plate material approx 9" wide x 26" tall x 90" deep. It shall include a rear mounted door with a vertical hinge and a thumb latch. Location officer side hosebed. | 1903 |
| 3340-0777 | Slip-on stainless steel dump elbow and 36" straight extension chute. Includes body mounted removable support arm and mounting brackets in compartment [#LOC] for elbow and straight chute. | 1898 |
| 3340-0778 | Wheel well liner extensions for inboard side of rear wheel well liners (PR). | 376 |
| 3340-0779 | All folding steps shall be Signature Fire Shopp brand. The folding steps shall be dual LED (top and bottom) model 101953-2 IPOS. | 174 |
| 3340-0785 | There shall be no visible diamond plate on the body exterior. | 348 |
| 3340-0786 | Dual Hosebed above the booster tank. Includes forward hosebed cover plate work (as applicable). Hosebed adjustable divider extrusion rearward of the furthest tower is to run full width of the hosebed in the upper hose bed. (as is practical with other hosebed mounted equipment). Lower hose bed over tank shall have one non adjustable center divider hard mounted to divide lower hosebed into (2) equal width storage compartments for dealer added pull out hosetrays with nylatron slide plates | 3318 |
| 3340-0788 | Storage Pan Hot Shot II Hydraulic Reservoir. Includes a lid hinged forward with gas shock hold open. | 842 |
| 3340-0789 | Hosebed storage pan. Locate in forward area of hosebed. Storage pan to be 109" interior length for Night Scan NSP7.5 light tower. | 1683 |
| 3340-0790 | Swing arm bracket with smooth plate box for TAL65 lightbar mounted on square extrusion. Swing arm to be mounted at rear of hosebed with pivot tower and (2) locking towers to be provided. | 806 |
| 3340-0791 | Body mainframe and hosebed side assemblies for a 87" high body. | 2658 |
| 3340-0795 | Stainless steel rear fender panels.Includes bolt-on stainless steel inner wheel well liners (not painted) and polished stainless steel outer fenderettes. | 1694 |
| 3340-0796 | Body main frame and hose bed side assemblies for a 94" high rescue pumper body. | 3881 |
| 3340-0797 | Body main frame and hose bed side assemblies for a 88" high pumper body. | 4552 |
| 3340-0798 | Extruded aluminum rubrails for the sides of the body below the lower side compartments and full width of the rear tailboard. | 748 |
| 3340-0799 | A cut-out shall be provided on the lower right rear panel of the body accessing a hydrant assist valve that will be located in compartment R3. Door opening shall be a minimum of 14" wide x 19" high. A vertically hinged smooth plate rear door shall be provided with a bent D-ring latch and a light wired to door ajar indicator circuit. | 1422 |
| 3340-0800 | Notched hosebed divider(s). Notch to be in center approximately 32" up from floor and angle up 45 degrees at each end. See photo on file. | 473 |
| 3340-0801 | Special hose bed divider reinforcement. Each divider shall have a round reinforcement welded in place on the forward and rear vertical edges and the top horizontal edges to stiffen the dividers as mounted. | 374 |
| 3340-0806 | Cab Body and Pump Module safety and warning Tags in French to be in addition to standard English E-One supplied Tags. | 1724 |
| 3340-0807 | Speedy Dry Hopper. Locate in roof compartment above R2. Includes discharge thru bottom of compartment R3 along forward compartment wall with valve for ground level dispensing. Capacity of speedy hopper is 100 lbs. | 1537 |
| 3340-0809 | Body main frame and hose bed for a 95" high stainless steel eMAX rescue pumper body. Hose bed to be 56" wide. | 4864 |
| 3340-0811 | Two (2) stainless steel dividers with ADT doors to be installed in the upper forward body dunnage area with clearance for deck gun. Hinged outboard side. | 1231 |

| Item No. | Description | |
|---|---|---|
| 3340-0812 | Hose tray - Polypropylene - removable. Tray includes pull-out grab handle (poly dowel) down low on each end to facilitate lifting. The tray shall be sized to fit the area above the ground ladders. The tray(s) shall be made from Polypropylene the floor of the tray shall be slotted to prevent the accumulation of water and allow for ventilation of wet hose. | 948 |
| 3340-0813 | Driver side hosebed storage box. Storage box to hold (3) New York style pike poles and (3) backboards (2"x16"x71"). Pike poles to be stored down low. Backboards to be stored up high with dividers seperating storage for each board. Includes vertically hinge hinged door (wired to door ajar) with D-ring latch. | 1506 |
| 3340-0821 | Locate (2) hosebed storage pans (1) each side of ladder storage box in forward area of hosebed. Pans to hold hydraulic cooler and hydraulic resevoir. | 959 |
| 3340-0823 | Body mainframe and hosebed side assemblies for a 85" high bi-level body. Includes stepped headboard. | 1331 |
| 3340-0830 | Turtle Tile brand floor matting covering L1 R1 and B1 compartment floors only. Color: [#COL]. | 692 |
| 3340-0833 | Above the right side ladder tunnel shall be a weather resistant top hatch compartment forward of the shovel and broom storage module. Compartment shall be approximately 12.75" wide x 74" long x 13.5" deep. Includes 3/16" polished aluminum treadplate door hinged outboard latching towards the hose bed. One (1) clear lens light shall be installed in the compartment and the lid shall be wired to the door ajar indicator in the cab. | 559 |
| 3340-0834 | Body main frame and hose bed side assemblies for an 83" high body with low hose bed and "L" shaped water tank. No upper cross over handrail. | 1660 |
| 3340-0836 | Compartment pan drop down door inside to have Zolatone gray finish (door only). Location L2 and R2 drop down doors. | 260 |
| 3340-0837 | Cast products AD0039-1 switch box assembly with polished flange 120 grit directional finish on lid and concealed hardware and hinges mounted on the rear body. | 231 |
| 3340-0838 | Hosebed deflector divider. Locate to officer side rear of hosebed forward of deck gun. Deflector smooth plate to cover the forward and side of the deck gun piping. Rearward side of deflector at back of hose bed to be diamond plate. | 375 |
| 3340-0841 | Sign plate smooth 30" x 30" mounted centered on body roof. Color: [#COL]. | 267 |
| 3340-0847 | Rubrail for the body (sides only serrated surface facing down). | 635 |
| 3340-0849 | Rub rail assemblies constructed of 3" x 2" Black U.H.M.W. plastic. (1) bolted to the lower exterior edge of the apparatus body and pump module. Rub rail shall be mitered 45 degrees at leading and trailing end and notched for marker and warning lights clearance (where applicable) | 1007 |
| 3340-0855 | There will be an access panel located in the hosebed for access to the water/foam tank level senders. | 123 |
| 3340-0861 | Reinforce flooring of compartment LTC and RTC for storage of heavy equipment. | 565 |
| 3340-0862 | Stainless steel trim on bottom edge of compartment opening of [#LOC]. Includes full height of exterior extrusion. | 174 |
| 3340-0863 | Headboard extrusions and smooth plate at top front of the body to be painted job color finished. | 218 |
| 3340-0864 | Diamond plate single axle wheel well. Includes bolt-on composite wheel well liners and sanded aluminum trim fenderettes. | 1030 |
| 3340-0868 | Fire Shopp recessed fuel fills for dual fuel fill applications. Includes brushed finish S/S doors with positive latch. | 659 |
| 3340-0870 | Stainless steel trim on bottom edge and covering entire surface of extrusion below compartment opening of [#LOC]. | 210 |
| 3340-0874 | Reinforced hinged .188" embossed diamond plate lid for dunnage pan. Includes two (2) D-Ring latches stainless steel hinge along forward edge and gas shock hold open. Lid to be reinforced with welded on structure on underside to allow for lid to be a walking surface. | 767 |
| 3340-0880 | Brushed stainless steel scuff plates for all body handrails. | 533 |
| 3340-0882 | Body main frame and hose bed for a 97" high stainless steel eMAX rescue pumper body. | 4967 |
| 3340-0883 | Rubber fenderette in place of weld-on. | 322 |
| 3340-0889 | Body mainframe and hosebed side assemblies for a 96" high body. | 4253 |
| 3340-0890 | Divider Hose Bed Special Height iat standard. All Hose Bed Divider(s) shall include an extra 4" height over the standard hose bed divider height. | 221 |
| 3340-0892 | Rub rail assemblies constructed of 3" x 2" Black U.H.M.W. plastic. (1) bolted to the lower exterior edge of the apparatus body only. Rub rail shall be mitered 45 degrees at leading and trailing end and notched for marker and warning lights clearance (where applicable) | 683 |
| 3340-0894 | Smooth plate single axle wheel well painted job color. Includes bolt-on composite wheel well liners and bolt-on polished alum fenderettes. Wheel well plates to be flush mounted. | 3461 |
| 3340-0895 | Smooth plate tandem axle wheel well painted job color. Includes bolt-on composite wheel well liners and bolt-on polished alum fenderettes. Wheel well plates to be flush mounted. | 5635 |
| 3340-0896 | Body wheelwell driver side compartments (2) approx 24" W x 6" H x 26" deep. A gasketed drop down door shall be installed on each compartment. Door material to match wheelwell finish. | 777 |
| 3340-0898 | Rolled hose rack for (2) hose rolls (1) 5" LDH 9" wide (1) for the balance of tray. Includes (3) dividers attached to roll out tray in compartment L1. | 412 |

| Item No. | Description | |
|---|---|---|
| 3340-0901 | (3) Removable number plates with mounting brackets. Locate (1) each side of cab rearward of driver and officer doors (1) driver side rear compartment face above taillights. Plates to be 5.25" tall X 5" wide and painted job color. Lettering and/or graphics not included. | 925 |
| 3340-0902 | Body wheelwell compartments (4) approx 24" W x 6" H x maximum depth permissible without interference with hydraulic line(s) reservoir(s) etc. A gasketed drop down door shall be installed on each compartment. Door material to match wheelwell finish. | 1553 |
| 3340-0904 | Logo rear body to be mounted at final inspection. | 276 |
| 3340-0907 | Body mainframe and hosebed side assemblies for a 88" high body. | 2658 |
| 3340-0908 | Slip-on stainless steel dump elbow and 36" straight extension chute. Includes body mounted removable support arm mounting brackets at rear of body for elbow and brackets for straight chute in R2 | 1898 |
| 3340-0909 | Divider Long Fixed. To run full length of hose bed (front to rear) positioned fixed as close to center of hosebed ROM roll up door drum center as hose loading permits.. | 662 |
| 3340-0910 | Label wheel well doors with 1x3 labels to read applicable contents per location. Mechanically attached lable to each location required. | 23 |
| 3340-0911 | A polypropylene storage box for foan cannisters shall be supplied. The storage shall be for fourteen (14) cannister 7 wide x 2 high. Each compartment shall be 6" wide x 11" high. There shall be NO back wall on the box. | 1684 |
| 3340-0915 | Body main frame and 46" wide hose bed for a 95" high rescue pumper body. | 3609 |
| 3340-0918 | Wheel Chocks Alum HGS Heavy Includes Brackets. Locate below compartment ahead of Drivers side rear wheels. | 597 |
| 3340-0919 | Diamond plate Storage Box. Located on the driver side compartment top for long tool storage. Includes hinged raised compartment lid with turn latches and grab handle(wired to door ajar indicator). Box to be as long as possible. | 1141 |
| 3340-0920 | Bolt-in partition wall. Locate in lower rear compartment transverse area. Partition to separate R3 compartment from B1 compartment. | 174 |
| 3340-0921 | Special hose bed divider height and reinforcement for single (or first) hose bed divider. The height of the hose bed divider shall be lowered 10" over standard. The divider shall have a round reinforcement welded in place on the rear vertical and the top horizontal edges to stiffen the divider as mounted. A Divider Support to run full width of hosebed (side to side) at the front of the hosebed and be attached to the hosebed divider to provide additional support. | 524 |
| 3340-0922 | Hosebed rearward of the booster tank. Includes diamond plate tank cover engine access provision and adjustable divider extrusions. HS pumper only. | 2608 |
| 3340-0923 | Speedy Dry Hopper. Locate in roof compartment above R3. Includes discharge thru bottom of compartment R4 along forward compartment wall with valve for ground level dispensing. Capacity of speedy hopper is 100 lbs. | 1537 |
| 3340-0924 | Aluminum angle 2"x2" bolt on light guard to protect ROM light fixture and roll-up door track from damage for L4 rearward light only. (1) 18" piece at top and (1) 18" piece at the bottom bolted to the rear wall. | 128 |
| 3340-0927 | Divider long fixed at the edge of the step-down in hosebed (driver side). Divider to run full length of hose bed (front to rear). | 561 |
| 3340-0928 | Body main frame and hose bed side assemblies for a 93" high pumper body with special location side sheet on right side to lower overhead ladder rack. No upper rear crossover hand rail with this option. | 3965 |
| 3340-0930 | Hosebed storage area (no pan) in forward area of hosebed with embossed diamond plate cover hinged forward with two grab handles and gas shock hold opens. The cover to open past 90 degree for ease of equipment loading and removal in the storage area. | 842 |
| 3340-0932 | Transverse opening in the lower section of side compartments to accommodate pass through the rear compartment. The opening will be 2" above the floor and have aluminum picture frame style trim from each compartment over lapping to enclose compartment wall breaks without a sleeve. | 2233 |
| 3340-0938 | Provide access with covers on forward wall of compartment R3 to access to upper KLAMP-IT hardware for DOT storage bottles located in R2. | 207 |
| 3340-0943 | Transverse opening in the lower rear section of side compartments to accommodate pass through the rear compartment. The opening will be 2" above the floor and have aluminum picture frame style trim from each compartment over lapping to enclose compartment wall breaks without a sleeve. | 1252 |
| 3340-0947 | Rolled hose rack for (3) hose rolls (1) 50' of 1.75" (1) 25' of 3" and (1) 25' of 5. Includes adjustable (4) dividers attached to roll out tray(s) in compartment(s) L1 R1. | 655 |
| 3340-0948 | The hose bed is to have the capacity for the following hose (unless otherwise specified on the approval drawing). Hose load shall be listed from driver to officer. Bed 1 1000' of 5" hose Bed 2 200' of 2-1/2" hose Bed 3 300' of 2" hose Bed 4 200' of 3" hose Bed 5 (2) areas each holding 200' of 3" hose seperated by a hinged false floor. | 677 |
| 3340-0949 | Stokes storage with stops located in the drivers side upper header. Includes a lift-up rear access door (wired to door ajar) w/bent D-ring latch. | 1893 |

| Item No. | Description | |
|---|---|---|
| 3340-0953 | Rub rail assembly constructed of 3" x 2" Black U.H.M.W. plastic. Bolted to the lower exterior perimeter edge of the apparatus body. Rub rail shall be mitered 45 degrees at leading and trailing end and notched for marker and warning lights clearance (where applicable). | 1490 |
| 3340-0954 | Stainless steel rear fender panels painted job color. (Recommended for FRP paint process compatibility!) Includes bolt-on stainless steel inner wheel well liners (not painted) and rubber outer fenderettes. | 1570 |
| 3340-0955 | Backboard storage sleeve. Locate in ladder tunnel. Rack to be approx 3''W x 18''H x 72''L. | 470 |
| 3340-0956 | Compartment R1 to be notched for vertical exhaust in back forward corner of the compartment. | 303 |
| 3340-0957 | Compartment R4 to be notched for deck gun piping in back rearward corner of the compartment. | 303 |
| 3340-0958 | Backboard storage sleeve for (2) boards individually stored one on top of the other. Each area to be 3"W x 17"H x 72"L. Includes (1) retaining strap on the driver side. Location: Vertically mounted in L1 and into R1 (no access this side) inboard of the vertical exhaust. | 773 |
| 3340-0959 | One (1) Vertical mount traffic cone holder shall be fabricated and installed to hold up to (8) 28" tall traffic cones with 12" bases (not included). The bracket shall be constructed of 1/8" aluminum smooth plate bolted and mounted to the left rear panel step bumperette inboard of the tail light assembly. | 303 |
| 3340-0960 | Body main frame and hose bed side assemblies for a 90" high pumper body. | 4659 |
| 3340-0961 | Divider long fixed at the edge of the step-down in hosebed (officer side) to be "L" shaped. Divider to run full length of hose bed (front to rear). | 561 |
| 3340-0962 | Body main frame and hose bed side assemblies for a 97 in. high body. | 4519 |
| 3340-0963 | Hosebed storage pan smooth plate painted black Durabak. Locate in forward area of hosebed. | 1053 |
| 3340-0964 | Storage pan over eMAX transverse storage area(s) to be smooth plate painted black Durabak. | 630 |
| 3340-0969 | Divider Reinforcement. To run full length of hose bed divider on top surface (front to rear). 3/4" extruded aluminum tubing welded to divider. Price per each divider. | 363 |
| 3340-0971 | Stainless steel tag on wheel well area above each tire location. Tag to be engraved silver with black lettering and specify pressure torque and size of each tire. | 238 |
| 3340-0975 | Smooth plate painted tandem axle wheel well. Includes bolt-on composite wheel well liners and bolt-on polished alum fenderettes. | 3486 |
| 3340-0976 | Horizontal air bag module for four (4) customer furnished air bags. Bags will be Paratech Maxiforce brand and each bag will store with two (2) identical pieces of 3/4" plywood. Nylon buckle strap assembly shall be provided across the openings. Locate on floor of compartment L2. See specifications for details. | 1362 |
| 3340-0978 | Body mainframe and hosebed side assemblies for a 104" high body. | 6372 |
| 3340-0979 | Smooth plate single axle wheel well painted black Durabak. Includes bolt-on composite wheel well liners and bolt-on polished alum fenderettes. | 1723 |
| 3340-0981 | Divider Support to run full width of hosebed (side to side) at the front of the hosebed and towards the rear of the hosebed at top of the divider(s). Attach to each hosebed divider to provide additional support. The rear divider support to be located as far rearward as available space on upper rear hose bed allows for support mounting. | 426 |
| 3340-0983 | All body and pump module compartments (if applicable) and/or storage areas (EXCEPT R1 compartment) to have no louvers or vents. Louvers or vents for compartment R1 are to located up high only. | 303 |
| 3340-0984 | Special Driver side hose bed walkway. Embossed diamond plate walkway driver side over driver side compartments to run full length of the body. Walkway to have drains with drain tubes that extend to the bottom of the vehicle. | 706 |
| 3340-0985 | Attic Ladder / Pike Pole cover to be located in compartment R1. Includes compartment wall cut-outs. | 196 |
| 3340-0991 | Backboard storage sleeve. Locate within RS hose bed cover underneath. Sleeve to be approximately 3'' H x 20'' W x 72'' L. | 869 |
| 3340-0993 | LINE-X package for hosebed storage pan(s): Includes all surfaces of the pan visible from top of the truck. Also includes all platework fabricated at E-ONE mounted inside the pan such as hydraulic system cover generator shield reservoir cover cooler cover cord reel cover boxes dividers trays etc as applicable. | 804 |
| 3340-0994 | LINE-X package for Pumper or Tanker body (excluding eMAX) see specification for more details. | 2464 |
| 3340-0995 | LINE-X package for under body platform(s): Includes all exterior surfaces of the pump panel operator and/or under body platform(s) as applicable. Quantity each. | 143 |
| 3340-0996 | LINE-X package for eMAX Pumper see specification for details. | 4100 |
| 3340-0997 | Horizontal fixedl shelf. Shelf to seperate upper hose from lower hose. | 614 |
| 3340-0998 | Body mainframe and hosebed side assemblies for a 101" high body. | 5583 |
| 3340-0999 | Push button latches to match side pump panel latch. Locate Top Mount pump panel | 213 |
| 3340-1000 | Cast Products FG4102-1-250-N (hinge right) recessed fuel fill with door. Recessed fuel fill driver side wheel well. | 148 |
| 3340-1003 | Storage pan over eMAX Rescue module. | 2053 |

| Item No. | Description | |
|---|---|---|
| 3340-1009 | The L3 Upper Compartment shall include Unistrut for dealer/customer supplied equipment. Two (2) full width horizontal lengths shall be attached to the upper back wall of the compartment. Top strut shall be located approx 14" down from compt opening. Second strut shall be located 12" below the upper measured center to center. | 285 |
| 3340-1010 | Notched hosebed divider(s). Notch to be in center approximately 25" up from hose bed floor and angle up 45 degrees at each end. Priced per divider. | 96 |
| 3340-1011 | Special hose bed divider reinforcement. Each divider shall have 3/4" extruded aluminum tubing reinforcement welded in place on the forward and rear vertical edges and the top horizontal edges to stiffen the dividers as mounted. Price per divider. | 363 |
| 3340-1012 | One (1) divider support(s) to attach to each top rear edge of each hose bed divider to provide additional support. SS product only. Price each. | 64 |
| 3340-1013 | The ladder compartment door shall be equipped with a hold open device. | 133 |
| 3340-1017 | LINE-X package for Tandem Axle Aerial see specification for details. | 9123 |
| 3340-1018 | LINE-X package for body fenderettes. | 251 |
| 3340-1022 | Storage pan over eMAX transverse storage area to be deleted and a solid tread panel top added. | 390 |
| 3340-1026 | Driver and officer side compartment top to be embossed diamond plate IPO standard. | 799 |
| 3340-1030 | Recessed switch enclosure with hinged stainless steel door with lift and turn latch. Located on the right rear body panel to protect the power hose bed cover switches. | 280 |
| 3340-1038 | Roof top compartment Interiors to have Zolatone black finish. | 2159 |
| 3340-1039 | Diamond plate tandem axle wheel well. Includes bolt-on composite wheel well liners and bolt-on rubber trim fenderettes. | 2158 |
| 3340-1040 | Body compartment Interiors and compartment mounted components (shelves trays toolboardsetc.) to have gray Scorpion polyurethane coating. To include pan of hinged doors and tool compartments (as applicable). Does not include floors if they are dia plt. | 14713 |
| 3340-1043 | Hosebed above the booster tank. Hosebed assembly to be designed with short divider(s) held forward 20". Hosebed adjustable divider extrusion rearward to run full width of the hosebed. | 2447 |
| 3340-1044 | Body mainframe and hosebed side assemblies for a 93" high body. | 3452 |
| 3340-1045 | Speedy Dry Hopper. Locate in roof compartment above forwardmost driver side compartment. Includes discharge through bottom of compartment along forward wall with valve for ground level dispensing. Pipe to be fully boxed in with a vertical partition running the full height and depth of the comaprtment and completly enclosed at the front as wide as necessary so the pipe is not visiable. Capacity of speedy hopper is 100 lbs. | 1780 |
| 3340-1049 | Stainless Steel corner guards for the driver and officer rear compartment face. Guards to wrap around the corner and be full height of side assembly. | 309 |
| 3340-1051 | Diamond plate box for directional lightbar and (2) GH scene lights. Box to be mounted at rear of hosebed. Lights to be surface mounted to box. | 639 |
| 3340-1052 | Body mainframe and hosebed side assemblies Low Profile for a 85" high Tanker style body with OAH issue. | 2658 |
| 3340-1054 | Sign plate smooth plate with sanded finish 30" x 30" mounted on forward body roof. | 267 |
| 3340-1057 | Modified hose bed divider height and reinforcement. The height of the hose bed divider (s) to extend up over body height 2 inches with tapered forward end at front of hose bed and rounded rear end. Divider (s) shall have a split round reinforcement welded in place on the forward and rear vertical edges and the top horizontal edges to stiffen the divider (s) as mounted and to provide a rounded edge where raised divider (s) will contact hose bed nylon cover in transit to reduce chaffing. Added per each divider as equipped. | 170 |
| 3340-1062 | Body main frame and 70" wide hose bed for an 90" high body with low hose bed and "L" shape tank. Hose bed is 40" from top of tailboard to bottom of hose bed. | 2623 |
| 3340-1063 | Rub rail assemblies constructed of 2.5" x 2" Black U.H.M.W. plastic. The first rub rail shall be bolted to the lower exterior edge of the apparatus body below the compartment doors. The second rub rail shall be mounted above the compartment doors on both sides of the body from front to back. The third rub rail shall be mounted just below the compartment tops on both sides of the body from front to back. | 2735 |
| 3340-1064 | LINE-X Package: Body compartment Interiors and compartment mounted components (shelves trays toolboardsetc.) to have LINE-X finish. To include pan of hinged doors and tool compartments (as applicable). Includes diamond plate floors and E-ONE style wheel well SCBA compartments if applicable. Package does not include roof top compartment interior. | 19013 |
| 3340-1065 | LINE-X package for Pumper or Tanker body stepping surfaces see specification for more details. | 822 |
| 3340-1066 | The storage box(es) shall have LINE-X finish both inside and outside. | 669 |
| 3340-1067 | LINE-X Package: Body compartment Interiors shall have LINE-X finish. Package does not include roof top compartment interior. | 8963 |
| 3340-1068 | Smooth plate tandem axle wheel well painted job color. Includes bolt-on composite wheel well liners and bolt-on alum fenderettes painted Durabak black. Wheel well plates to be flush mounted. | 6288 |
| 3340-1070 | LINE-X package for Rescue catwalk area on top of the body. Includes floor surfaces of catwalk and forward pan area. | 2050 |

| Item No. | Description | |
|---|---|---|
| 3340-1079 | Slip-on stainless steel dump elbow and 36" straight extension chute. Includes body mounted removable support arm and mounting brackets at rear of body for straight chute and in dunnage pan for elbow. | 2090 |
| 3340-1081 | Two (2) short dividers to run from foward hosebed wall front of fill tower to create a storage area. Wetside Tanker Only. | 844 |
| 3340-1090 | Diamond plate single axle wheel well. Includes bolt-on aluminum wheel well liners sanded finish and bolt-on polished aluminum fenderettes. | 1709 |
| 3340-1091 | Durabak package for Tandem Axle Aerial see specification for details. | 9123 |
| 3340-1092 | Install a stainless steel 2" high flange full width of the door opening on the floor of compartment L2. | 48 |
| 3340-1094 | Over the hose bed swing-out bracket for rear lighting accessories. Height not to exceed highest point on rear body. Swing bracket located on inside of hose bed side sheet. to reduce OAH of installation. Constructed of aluminum extrusion/tubing with alumium plate end brackets. Paint job color. | 1315 |
| 3340-1095 | Brushed stainless steel scuff plate for folding or formed step. (ea.) Locate per step on painted surface to protect paint from boot contact while climbing. Position on body module walkover or as applicable where folding or formed steps are optioned on apparatus. Not to be used where painted surface is coated with Line-X or similar anti scuff coatings. | 32 |
| 3340-1096 | Full width hose bed above the booster tank from the officer side hose bed at ladder rack Urban notch to the driver side with raised side assemblies. | 2036 |
| 3340-1098 | Hose bed walkway offset to officer side. Non-slip diamond plate walkway to run full length of hose bed. | 527 |
| 3340-1099 | Stainless steel light guards on the strip lights in body compartments. Price per compartment fixture. | 62 |
| 3340-1102 | Durabak package for hosebed storage pan(s): Includes all surfaces of the pan visible from top of the truck. Also includes all platework fabricated at E-ONE mounted inside the pan such as hydraulic system cover generator shield reservoir cover cooler cover cord reel cover boxes dividers trays etc as applicable. | 804 |
| 3340-1103 | Durabak package for Pumper or Tanker body (excluding eMAX) see specification for more details. | 2464 |
| 3340-1104 | Durabak package for body fenderettes. | 251 |
| 3340-1105 | Durabak package for body interior door panels. Location(s): [#LOC]. | 251 |
| 3340-1107 | Front of hose bed stainless steel transverse storage divider for selected accessory such as a generator hose reel and fill towers. Located in forward area of 72" wide hose bed to separate the storage area from the main hose storage area. Applicable main hose bed dividers will be located rearward of the transverse divider. | 565 |
| 3340-1119 | Rivet in place stainless steel trim on bottom edge of compartment opening. Option quantity is each. Option does not include stainless steel trim. | 57 |
| 3340-1123 | Underbody full width mudflap mounted to body. Includes white reflective "STAY BACK 300 FEET" lettering. Locate at rear of body ahead of staircase. Bottom of flap to be approx 12" off ground. | 858 |
| 3340-1125 | All body walkway and speedlay compartments (if applicable) and/or storage areas (EXCEPT R3 compartment) to have no louvers or vents. Louvers for compartment R3 are to located only on the rear and back walls. | 303 |
| 3340-1127 | Roof top compartment Interiors to have Zolatone black finish. | 2159 |
| 3340-1129 | Underbody UltraGuard splash guard behind rear axle mounted to body at rear step area. Guard to be modified to include cutouts for rear tow eyes and rear hitch receiver (If applicable). | 730 |
| 3340-1131 | Storage for Fire Department supplied ALS gear in a shelving style pigeon hole horizontal fashion to closely match existing Chicago units in compartment L3 and lower B1. Module constructed of 1/8" smooth aluminum plate. | 2610 |
| 3340-1132 | Stainless steel rear fender panels with aluminum treadplate overlays IPO painted finish. Includes bolt-on stainless steel wheel well liners (not painted) and rubber outer fenderettes. | 1294 |
| 3340-1133 | Cargo net. Black Nylon cargo net with 2x2 openings shall be provided inside body compartment for area below transverse style extended floor [#LOC]. Cargo net to be permanently fastened to bottom of transverse compartment style extended floor and secured in place at bottom and sides with twist-locks snaps and Velcro straps as deemed required by E-1 engineering to adequately secure cargo in place. | 759 |
| 3340-1134 | LINE-X package for Wetside body: All visible diamond plate surfaces shall be coated with LINE-X finish. See specification for more details. | 2464 |
| 3340-1143 | Body main frame and hose bed side assemblies for a 90" high pumper body with a 72" wide low hose bed. | 2718 |
| 3340-1145 | Removable aluminum hose bed storage tray (EA) installed at the top rear of bed 1 at the center of the body. Tray shall include manual release assembly to lock tray in place. The floor of the tray(s) to be slotted to prevent the accumulation of water and allow for ventilation of wet hose. UHMW strips on the bottom rails to assist in installation/removal of tray. | 788 |
| 3340-1147 | Bolt-on diamond plate 24" tailboard (full width of body) ILO a standard tailboard. Includes (2) slanted beavertails (no stanchions) with removable outer panels and handrails - (2) vertical on trailing edge of beavertails. Wetside Tanker Only. | 1401 |

| Item No. | Description | |
|---|---|---|
| 3340-1148 | Divider Support to run full width of hosebed (side to side) at the front of the hosebed divider(s). Attach to each hosebed divider to provide additional support. | 332 |
| 3340-1149 | Stainless Steel corner guard for the officer rear 3x3 to protect the paint from the pike poles.. Guard to wrap around the 3x3. | 155 |
| 3340-1152 | The upper right sight side of the body shall include an integral drip edge formed into the compartment top trim assembly. Trim shall be formed at a 30 degree angle. The upper side of the body shall include a full length FRP panel without exposed seams. The seams will be positioned behind the upper side warning lights. The warning lights shall be trimmed with a 14" x 14" mirror polished stainless steel trim panels. | 169 |
| 3340-1159 | Bolt-in partition. Locate: R4 23 inches from aft compartment wall and span from compartment floor to bottom of permanent shelf located 20 inches above floor mounted generator tray. | 267 |
| 3340-1163 | Compartment heater. Includes switch on driver overhead. Location: [#LOC]. | 1361 |
| 3340-1164 | The upper top sides of the body shall include an integral drip edge formed into the compartment top trim assembly. Trim shall be formed at a 30 degree angle. | 139 |
| 3340-1165 | Body main frame and 96" wide hose bed for an 83" high body with low hose bed and "L" shaped water tank. | 1813 |
| 3340-1166 | Rub rail assemblies constructed of 2.5" x 2" Black U.H.M.W. plastic. Bolt to the lower exterior edge of the apparatus body below the side of body compartment doors. | 1131 |
| 3340-1167 | Stainless steel trim on edges of compartment openings; vertical edge of L1 and R1 opposite the hinges and the vertical edges of L2 and R2 | 559 |
| 3340-1168 | Brushed stainless steel rear fender panels. Includes bolt-on stainless steel inner wheel well liners (not painted) and rubber fenderettes. | 2087 |
| 3340-1169 | Body main frame and 59" wide hose bed side assemblies for a 90" high pumper body. | 3269 |
| 3340-1171 | Rub rail assemblies constructed of 2.5" x 2" Black U.H.M.W. plastic. The first rub rail shall be bolted to the lower exterior edge of the apparatus body below the compartment doors. The second rub rail shall be mounted above the compartment doors on both sides of the body from front to back. | 2113 |
| 3340-1177 | Body main frame and hose bed side assemblies for a 88" high rescue pumper body with a 72" wide hose bed and a special location side sheet on right side to lower overhead ladder rack. No upper rear crossover hand rail with this option. | 3965 |
| 3340-1179 | Flooring plate additional in R2 compartment. 3/16" aluminum smooth plate to be bolted in place 1/2" above standard diamond plate compartment floor. | 89 |
| 3340-1180 | Notch the ceiling of the [#LOC] compartment and add a cap to raise the ceiling height. | 313 |
| 3340-1186 | LINE-X package for under body platform(s): Includes all exterior surfaces of the pump panel operator and/or under body platform(s) as applicable. Quantity each. | 260 |
| 3340-1188 | Cast Products recessed fuel fill with door in driver side wheel well. | 148 |
| 3340-1189 | Nylatron bolt-on overlay for compartment floor (full width/full depth). Includes 45 degree beveled edge to outside and .187" smooth plate aluminum beneath Nylatron floor with fasteners countersunk. Location: [#LOC]. | 603 |
| 3340-1193 | There shall be 12 gauge stainless steel smooth plate floor above the horizontal hard suction storage racks in the drivers roof top compartments to provide additional storage. | 1071 |
| 3340-1194 | The rear of the outer (2) hose bed dividers to be cut back 6". An additional adjustable track will be installed at the rear of the hose bed to secure these dividers. | 286 |
| 3340-1198 | Bolt-in partition wall. Locate in lower rearward side compartment in order to divide the compartment storage area from the cord reel and/or other permenently mounted equipment in the forward or rearward area of the compartment. | 134 |
| 3340-1208 | Body main frame and hose bed for a 95" high stainless steel eMAX rescue pumper body. Hose bed to be 46" wide. | 4864 |
| 3340-1211 | Front of hose bed stainless steel partial storage divider on driver side for additional storage. Located in forward area of hose bed at end of hard suction storage assembly to separate the storage area from the main hose storage area. Applicable main hose bed dividers will be located rearward of the partial divider. | 475 |
| 3340-1212 | The following items to be sanded smooth plate painted with gray Scorpion coating in place of standard diamond plate: Aluminum hose bed covers.The coating shall be tinted to match the upper body color and have a flat (not glossy) slip resistant finish. | 1741 |
| 3340-1213 | Rear compartment protruding through rear side compartment. Includes hinged door (to match rear body finish) with D-Ring latch. Door Ajar included. | 607 |
| 3340-1214 | Aluminum diamond plate trim on bottom and side edges of speedlay openings. | 429 |
| 3340-1216 | Body mainframe and hosebed side assemblies for a 102" high body. | 5744 |
| 3340-1217 | Cast products AD0003-1 switch box assembly with polished flange 120 grit directional finish on lid and concealed hardware and hinges mounted on the rear body. | 219 |
| 3340-1220 | Speedy Dry Hopper. Locate in roof compartment above L4. Includes discharge thru bottom of compartment L4 along forward compartment wall with valve for ground level dispensing. Capacity of speedy hopper is 100 lbs. | 1537 |
| 3340-1225 | Diamond plate single axle wheel well. Includes bolt-on composite wheel well liners and bolt-on rubber trim fenderettes. | 1117 |

| Item No. | Description | |
|---|---|---|
| 3340-1227 | Speedy Dry Hopper. Locate [#LOC]. The hopper shall have a discharge chute with a shut-off valve that extends down into the interior compartment directly below the roof compartment. with an extension hose for ground level dispensing . Capacity of speedy hopper is 25 lbs. | 1339 |
| 3340-1229 | Smooth plate single axle wheel well painted job color. Includes bolt-on aluminum wheel well liners painted Job Color and bolt-on polished aluminum fenderettes. | 1952 |
| 3340-1234 | Nylon black cargo net in interior compartment opening behind door(s) of upper [#LOC]. Cargo net to be mechanically attached at compartment offest and bungee cords in the top corners. | 618 |
| 3340-1237 | Enclosure to box-in the CAFS components and thereby provide an obstruction free usable space in the remainder of the compartment. Locate: [#LOC] | 260 |
| 3340-1238 | Sleeve through the driver side compartment into the rear compartment to accomodate Little Giant Model 17 ladder on its beam recessed as much as possible. Includes a strap to secure the ladder and appropriate spacer/stop. Bolt on vertical partition in front of the sleeve full width and full height of the rear compartment to seperate the usable compartment space. | 761 |
| 3340-1240 | Aluminum diamond plate overlays on both sides of the pump module to extend from the top of the pump panel or as applicable to surround openings down to running boards. Overlay shall surround the openings for the speed lay(s) and or tool compartments in the forward area of the pump module and shall be positioned to protect the module surface during tool or hose deployment. | 777 |
| 3340-1242 | Hosebed tray - removable. Tray includes a 1.25" extruded alum handle low on each end of tray and slots down each side to facilitate lifting. The floor of the tray shall have poly slides and be slotted to prevent the accumulation of water and allow for ventilation of wet hose. | 668 |
| 3340-1243 | Backboard storage sleeve. Locate within RS hose bed cover underneath. Sleeve to be approximately 5'' H x 20'' W x 72'' L. Rear of storage sleeve to have a horizontal hinged door with push button latches and mounting for notched rear hosebed cover flap. | 948 |
| 3340-1244 | Flooring plate additional in [#LOC] compartment. 3/16" aluminum smooth plate to be bolted in place 1/2" above standard diamond plate compartment floor. | 177 |
| 3340-1245 | Flooring plate additional in R2 compartment. The 3/16" aluminum smooth plate to be bolted in place 1/2" above standard diamond plate compartment floor and shall be 30" wide x deep as possible offset rearward. | 177 |
| 3340-1248 | One (1) Vertical mount traffic cone holder shall be fabricated and installed to hold up to (8) 28" tall traffic cones with 12" bases (not included). The bracket shall be constructed of 1/8" aluminum smooth plate bolted and mounted to the right rear panel step bumperette inboard of the tail light assembly. | 303 |
| 3340-1253 | LINE-X Package: Specified Body compartment interior and compartment mounted components (shelves trays toolboardsetc.) to have LINE-X finish. To include pan of hinged doors if applicable. Compartment interior includes floor back and side walls and ceiling as applicable. Location(s): [#LOC]. | 2716 |
| 3340-1258 | Body main frame and 72" wide hose bed for a 93" high rescue pumper body. | 2939 |
| 3340-1259 | The spacer plates between the cab and body shall be coated with LINE-X. | 260 |
| 3340-1265 | One (1) Vertical mount traffic cone holder shall be fabricated and installed to hold up to (8) 28" tall traffic cones with 12" bases (not included). The bracket shall be constructed of 1/8" aluminum smooth plate bolted and mounted to the right rear panel step inboard of the tail light assembly. Note; this may extend the OAL of the vehicle depending upon the depth of the selected rear step. | 303 |
| 3340-1271 | Cover heater. Cover to be aluminum. Finish to match compartment interior. Location: [#LOC]. | 104 |
| 3340-1273 | Diamond plate corner guard shall extend from inside the wall of the hosebed. | 326 |
| 3340-1275 | Enhanced extended compartment located [#LOC]. Includes hinged door (to match rear body finish) with D-Ring latch. Door Ajar included. Requires enhanced extended body compartmentation (selected separately). This option reduces the depth of rear side compartments. | 438 |
| 3340-1282 | Stainless steel trim along sides and top edge of each fuel fill opening on driver side of body. | 192 |
| 3340-1283 | Speedy Dry Hopper. Locate in roof compartment above L4. Includes discharge thru bottom of compartment L4 along rearward compartment wall with valve for ground level dispensing. Capacity of speedy hopper is 100 lbs. | 1537 |
| 3340-1284 | Swirl plate corner guards for the driver and officer front compartment face. Guards to wrap around the corner and be full height of side assembly or to a max of 96". | 478 |
| 3350-0000 | Hydraulic hose reel for use with Hurst brand tools. Includes 100' 1/4" Parker Polyflex hose (up to 5000 PSI) and rollers (captive type). Location: [#LOC]. Hose Color: [#COL]. | 2759 |
| 3350-0001 | Air Reel w/electric rewind. 12V with 100' 1/4 in. hose plumbed to the truck air system (unless otherwise specified). Location: [#LOC]. | 3033 |
| 3350-0002 | Low Pressure Utility Air Hose Reel assembly with 175' 3/8 in. low pressure air hose and mini panel. Locate in [#LOC]. | 2759 |
| 3350-0004 | Reel Air. Low Pressure Utility Air Hose Reel assembly (Includes Rollers) with 250' 3/8 in. low pressure air hose. Includes mini panel located in compartment below reel. Located in [#LOC]. | 2911 |
| 3350-0009 | Hydraulic hose reel for use with TNT brand tools. Includes 100' 1/4" Parker Polyflex hose (up to 10500 PSI) and rollers (captive type). Location: [#LOC]. Hose Color [#COL]. | 5543 |

| Item No. | Description | |
|---|---|---|
| 3350-0010 | Hydraulic hose reel for use with Phoenix brand tools. Includes 100' 1/4" Parker Polyflex hose (up to 5000 PSI) and rollers (captive type). Location: [#LOC]. Hose Color [#COL]. | 2759 |
| 3350-0011 | Hydraulic hose reel for use with Code 3 brand tools. Includes 100' 1/4" Parker Polyflex hose (up to 5000 PSI) and rollers (captive type). Location: [#LOC]. Hose Color [#COL]. | 2759 |
| 3350-0012 | Hydraulic hose reel for use with Amkus brand tools. Includes 100' 1/4" Parker Polyflex hose (up to 10500 PSI) and rollers (captive type). Location: [#LOC]. Hose Color: [#COL]. | 5543 |
| 3350-0013 | Hydraulic hose reel for use with Hurst Centaur brand tools. Includes 100' 1/4" Parker Polyflex hose (up to 10000 PSI) and rollers (captive type). Location: [#LOC]. Hose Color [#COL]. | 5543 |
| 3350-0014 | Hydraulic hose reel for use with Genesis brand tools. Includes 100' 1/4" Parker Polyflex hose (up to 10000 PSI) and rollers (captive type). Location: [#LOC]. Hose Color [#COL]. | 5543 |
| 3350-0015 | Hydraulic hose reel for use with Holmatro brand tools. Includes 100' 1/4" Parker Polyflex hose (up to 10000 PSI) and rollers (captive type). Location: [#LOC]. Hose Color [#COL]. | 5543 |
| 3350-0016 | 12' Lead/Supply Line for high pressure hydraulic reel. To be used with 10000 PSI hyd reels. Locate on reel in [#LOC]. | 944 |
| 3350-0017 | 30' Lead/Supply Line for high pressure hydraulic reel. To be used with 10500 PSI hyd reels. Locate [#LOC]. | 1403 |
| 3350-0018 | 12' Lead/Supply Line for low pressure hydraulic reel. To be used with 5000 PSI hyd reels. Locate [#LOC]. | 756 |
| 3350-0019 | 30' Lead/Supply Line for low pressure hydraulic reel. To be used with 5000 PSI hyd reels. Locate [#LOC]. | 1188 |
| 3350-0024 | Dual hydraulic reel rollers mounted thru bolt-on bracket. Location(s): [#LOC]. | 555 |
| 3350-0025 | Hydraulic hose reel for use with TNT brand tools. Includes 100' 1/4" synthetic rubber hose (up to 10500 PSI) and rollers (captive type). Location: [#LOC]. Hose Color [#COL]. | 5543 |
| 3350-0026 | Hydraulic hose reel for use with Amkus brand tools. Includes 100' 1/4" rubber hose (up to 10500 PSI) and rollers (captive type). Location: [#LOC]. Hose Color: [#COL]. | 5543 |
| 3350-0028 | Raceway for 12' Lead/Supply Line between the B1 and L3 compartments. | 385 |
| 3350-0029 | Route hydraulic lead line(s) to [#LOC]. | 112 |
| 3350-0030 | Low pressure utility air hose reel w/spring rewind. Includes 50' 3/8" low pressure air hose rollers ball stop and and shut-off valve accessible from ground. Loc: [#LOC]. | 1528 |
| 3350-0032 | Akron utility air hose reel. Includes 200' 3/8" hose and reel mounted rollers (captive type). Loc: [#LOC]. | 1622 |
| 3350-0033 | Akron hydraulic hose reel for use with Hurst brand tools. Includes 100' 1/4" Parker Polyflex hose (up to 5000 PSI) and rollers (captive type). Location: [#LOC]. Hose Color: [#COL]. | 2565 |
| 3350-0034 | Hydraulic hose reel for use with Holmatro Core Technology tools. Reel model EF2220-17-18 w/ 100' of CORE hydraulic hose and a 30' CORE Holmatro pigtail. Location: [#LOC]. Hose Color [#COL]. | 8780 |
| 3350-0036 | Hydraulic hose reel for use with Hurst Centaur brand tools. Includes 150' 1/4" Parker Polyflex hose (up to 10000 PSI) and rollers (captive type). Location [#LOC]. Hose Color [#COL]. | 6748 |
| 3350-0040 | 12' Lead/Supply Line for high pressure hydraulic reel. To be used with 10500 PSI hyd reels. Locate on reel in [#LOC]. | 991 |
| 3350-0041 | 30' Lead/Supply Line for high pressure hydraulic reel. To be used with 10500 PSI hyd reels. Locate [#LOC]. | 1472 |
| 3350-0042 | Triple Hose Lead/Supply Line for TNT Reels. (1) 30' Lead/Supply Line for high pressure hydraulic reel. Locate officer side front bumper. Hose Color Blue. (2) 12' Lead/Supply Line for high pressure hydraulic reel. driver forward roof compartment (above L1 forward). Hose Color (1) Red and (1) Yellow. To be used with 10000 PSI hyd reels. | 4622 |
| 3350-0043 | Akron hydraulic hose reel for use with Amkus brand tools. Includes 100' 1/4" Parker Polyflex hose (up to 10500 PSI) and rollers (captive type). Location: [#LOC]. Hose Color: [#COL]. | 3956 |
| 3350-0045 | Akron reel to be powder painted custom color. Requires approval from vendor on color. Location: [#LOC]. Reel Color: [#COL]. | 140 |
| 3350-0046 | 8' Lead/Supply Line for high pressure hydraulic reel. To be used with hyrdraulic reels between 10000 to 10500 PSI. Locate: [#LOC]. | 460 |
| 3350-0047 | 6' Lead/Supply Line for high pressure hydraulic reel. To be used with 10500 PSI hyd reels. Locate on reel in [#LOC]. | 931 |
| 3350-0048 | Low Pressure Utility Air Hose Reel assembly with 250' 3/8 in. low pressure air hose. Locate in [#LOC]. | 2186 |
| 3350-0049 | Streamline fittings for Hurst reels and tools. This covers 3 hose to lead connections and 6 tool to reel connections. | 3696 |
| 3350-0050 | Dual hydraulic reel rewind switch panel. Includes mounting rewind switches towards center of bracket. Location: mounted between B1 hydraulic reels. | 286 |
| 3350-0051 | Nexus couplings with swivels main reel hose only. Lead-ins to use standard TNT couplers. | 1282 |
| 3350-0052 | 6' Lead/Supply Line for high pressure hydraulic reel. To be used with 10000 PSI hyd reels. Locate on reel in [#LOC]. | 908 |
| 3350-0053 | 40' Lead/Supply Line for low pressure hydraulic reel. To be used with 5000 PSI hyd reels. Locate [#LOC]. | 1583 |

| Item No. | Description | |
|---|---|---|
| 3350-0054 | Hydraulic hose reel with Nexus couplings with swivels for use with TNT brand tools. Includes 60' 3/8" hose (up to 10500 PSI) and rollers (captive type). Location: officer side front bumper. Hose Color: Black/Black with Blue shrink wrap every 10'. | 6821 |
| 3350-0055 | Hydraulic hose reel with Nexus couplings with swivels for use with TNT brand tools. Includes 100' 3/8" hose (up to 10500 PSI) and rollers (captive type). Location: B1 driver side. Hose Color: Black/Black with Red shrink wrap every 10'. | 6821 |
| 3350-0058 | Streamline fittings for Hurst reels and tools. This covers hose to lead connections and 2 tool to reel connections. | 1234 |
| 3350-0059 | 6' Lead/Supply Line for Holmatro Core hydraulic reel. To be used with Holmatro Core hyd reels. Locate on reel in [#LOC]. | 1161 |
| 3350-0060 | Hydraulic hose reel for use with Holmatro Core Technology tools. Reel model EF2220-17-18 w/ 100' of CORE hydraulic hose. Location: [#LOC]. Hose Color [#COL]. | 6639 |
| 3350-0061 | A set of hydraulic ports will be located in the front bumper and B1 compartment for use with Hurst Brand tools. Ports should have quick disconnects be colored black so a lead may be plugged directly into them. Locate on driver side of front bumper and B1 driver side up high (approximately 4" below and 2 " rearward of roll up door spool). Includes 30' Lead/Supply Line to be used with 5000 PSI hydraulic ports. The Lead/Supply Line to be routed from the driver side front bumper and B1compartment to the forward area of L1. | 1672 |
| 3350-0062 | Hydraulic hose reel for use with Hurst brand tools. Includes rollers (captive type). Does not include hydraulic hose. Location: [#LOC]. | 2118 |
| 3350-0063 | Low Pressure Utility Air Hose Reel assembly with 175' low pressure 1/2" air hose and mini panel. Locate in L2 offset rearward of cord reel set back 24" from compartment opening with rewind switch located next to the breaker box locate the air panel in L2 between lower air bag rack and adjustable shelves with protective shield above air panel run reel plumbing to dunnage area forward of drivers side coffin compartment for the customer installed air compressor. | 2922 |
| 3350-0065 | Rollers and bracket captive for air reel. Roller shall be mounted through a bolt-on bracket. Includes rewind switch mounted on side wall. Location(s): [#LOC]. | 832 |
| 3350-0066 | 16' Lead/Supply Line for low pressure hydraulic reel. To be used with 5000 PSI hyd reels. Locate [#LOC]. | 802 |
| 3350-0068 | A lead line #8 5000 psi hydraulic hose line routed from IHT manifold to B2 lower rear wall. | 540 |
| 3350-0069 | Hydraulic tool ports with TNT RV-120 remote actuation vlv. Quick connect fittings on vlv to be for Phoenix brand tools. vlv with tool fittings to be located on officer side of front bumper. Includes hyd supply lines run to B1. | 2124 |
| 3350-0072 | A lead line 5000 psi hydraulic line routed from B2 lower forward wall to dunnage pan located MAS heat exchanger | 772 |
| 3350-0073 | A return lead line 5000 psi hydraulic line routed from B2 lower forward wall to dunnage pan located generator | 772 |
| 3350-0074 | Raceway 8" x 8" (round) for hydraulic hose routing from dunnage area to chassis | 667 |
| 3350-0077 | Hydraulic hose reel for use with Amkus brand tools. Includes 150' 1/4" Parker Polyflex hose (up to 10500 PSI) and rollers (captive type). Location: [#LOC]. Hose Color: [#COL]. | 5820 |
| 3350-0078 | Hydraulic reels to be mounted in aluminum tray with a cutout for roller assembly. A 1" lip around roller tray assembly to contain any fluids that may leak from hyd reel. Location [#LOC]. | 448 |
| 3350-0081 | Raceway for Air Lines from Driver and Officer Roof Top compartments to rearward L3 compartment for Dealer Supplied and Installed Air Fill System. Locate raceway in ceiling of L3 rearward and as far back as possible. | 667 |
| 3350-0083 | Hydraulic hose reel for use with Amkus brand tools. Includes rollers (captive type). Does not include hydraulic hose. Location: [#LOC]. | 2451 |
| 3350-0084 | 16' Lead/Supply Line for high pressure hydraulic reel. To be used with 10500 PSI hyd reels lines are red and black in color. Compatible with Amkus tool brand. Locate on reel in [#LOC]. | 1161 |
| 3350-0085 | 16' Lead/Supply Line for high pressure hydraulic reel. To be used with 10500 PSI hyd reels lines are yellow and black in color. Compatible with Amkus tool brand. Locate on reel in [#LOC]. | 1161 |
| 3350-0088 | 40' Lead/Supply Line for high pressure hydraulic reel. To be used with 10500 PSI hyd reels. Locate: [#LOC]. | 1870 |
| 3350-0089 | CMW model 6011-W3-H1 dual reel low pressure working air and hydraulic hose reel combo. Includes 100' of 300 PSI blue air hose and 100' of 10500 PSI red/black hydraulic hose compatible with Amkus tools. Located on ceiling of compartment B1 offset to officer side. | 7351 |
| 3350-0090 | CMW model 6011 dual hydraulic hose reel for use with 10500 PSI Amkus tools. Reel SHALL NOT be supplied with hose or ball stops. Located on ceiling of compartment B1 offset to driver side. | 5154 |
| 3350-0091 | 15' Lead/Supply Line for high pressure hydraulic reel. To be used with 10500 PSI hyd reels. Locate on reel in [#LOC]. | 1085 |
| 3350-0092 | Hydraulic hose reel for use with Holmatro brand tools. Includes 60' of Core Technology hose installed (up to 10000 PSI) and rollers (captive type). Location: [#LOC]. Hose Color: [#COL]. | 5272 |
| 3350-0098 | 45' Lead/Supply Line for low pressure hydraulic reel. To be used with 5000 PSI hyd reels. Locate [#LOC]. | 1649 |
| 3350-0099 | Hydraulic hose reel for use with Holmatro Core Technology tools. Reel model EF2220-17-18 w/ 80' of CORE hydraulic hose. Location: [#LOC]. Hose Color [#COL]. | 5892 |

| Item No. | Description | |
|---|---|---|
| 3350-0100 | 31' to 40' Core Technology Lead/Supply Line for high pressure hydraulic reel. To be used with 10000 PSI hyd reels. Locate on reel in [#LOC]. | 1943 |
| 3350-0101 | Up to 10' Core Technology Lead/Supply Line for high pressure hydraulic reel. To be used with 10000 PSI hyd reels. Locate on reel in [#LOC]. | 1319 |
| 3350-0102 | Hydraulic reel rewind switch. Switch located [#LOC]. | 131 |
| 3350-0104 | 8' Lead/Supply Line for high pressure hydraulic reel. To be used with 10500 PSI hyd reels. Locate on reel in [#LOC]. | 894 |
| 3350-0106 | Air reel w/electric rewind 100' of .375" hose. Breathing Air to plumbed to the B/A cascade system for low pressure utility air. Includes 100' 3/8" low pressure air hose rollers and ball stop (controls for reel included with breathing air system). Location: Roof top compartment abve R4 rearward. | 2186 |
| 3350-0107 | Air reel w/electric rewind 100' of .375" hose for low pressure utility air. Dealer is responsible for plumbing air reel to the cascade system. Includes 100' 3/8" low pressure air hose rollers and ball stop. Location: L4 ceiling offset forward rearwar of cord reel. | 2186 |
| 3350-0108 | CMW model 6011 dual hydraulic hose reels for use with 5000 PSI tools shall be provided and installed. Includes two (2) sets of 100' 1/4" twinline hose (up to 5000 PSI) hose guides and ball stops. Includes (2) 30' lead/supply lines. Location: [#LOC]. Hose Color: [#COL]. | 13436 |
| 3350-0109 | A slide out and hinged roller assembly. Roller shall be Hannay Reels 4 way roller 2.5" opening mounted on a slide out bracket attached up high on the side walls of compartment L3. | 358 |
| 3350-0111 | Bulk Head Fittings including (2) 3' Pig Tails. Locate R3 back wall offset forward and 10" off compartment floor. | 920 |
| 3350-0115 | CMW model 6011 dual hydraulic hose reel for use with 10500 PSI TNT tools shall be provided and installed. Includes two (2) sets of 100' 1/4" twinline hose (up to 10500 PSI) hose guides and ball stops. Location: [#LOC]. Hose Color: [#COL]. | 10760 |
| 3350-0116 | Dual hydraulic reel rollers located in back wall of center front bumper tray. | 555 |
| 3350-0117 | Captive roller assemblies for (1)cord reel and (1) air reel mounted thru bolt-on bracket. Includes mounting rewind switches adjacent to each roller for it respective reel on bracket. Locate in [#LOC]. | 970 |
| 3350-0118 | CMW model 6011 dual hydraulic hose reel for use with 10000 PSI Genesis tools shall be provided and installed. Includes two (2) sets of 100' 1/4" twinline hose (up to 10500 PSI) hose guides and ball stops. Location: [#LOC]. Hose Color: [#COL]. | 10760 |
| 3350-0119 | Akron utility air hose reel. Capacity for 200' 3/8" hose (hose not included) and reel mounted rollers (captive type). Loc: L3 forward. | 1344 |
| 3350-0121 | 30' Lead/Supply Line for high pressure hydraulic reel. To be used with 10000 PSI hyd reels. Locate [#LOC]. | 1403 |
| 3350-0122 | Mounting to be provided for twin line hydraulic hose reel. Includes mounting only. Location: [#LOC]. | 541 |
| 3350-0123 | Bulk Head Fittings including (2) 5' Pig Tails. Locate R3 back wall offset forward and 10" off compartment floor. | 1136 |
| 3350-0127 | Hydraulic hose reel for use with Genesis brand tools. Includes Genesis 100' 1/4" twinline hose with One Step coupler and rollers (captive type). Location: [#LOC]. Hose Color [#COL]. | 7452 |
| 3350-0128 | Captive roller assemblies mounted on slideout assembly. Includes mounting rewind switches adjacent to each roller for it respective reel on slideout assembly. Locate in [#LOC]. | 489 |
| 3350-0129 | Bulk Head Fittings including (2) 5' Pig Tails. Locate R3 back wall offset rearward and 10" off compartment floor. | 1136 |
| 3350-0131 | CMW model 6011 dual hydraulic hose reel for use with 10500 PSI Genesis tools. Reel SHALL NOT be supplied with hose or ball stops. Located [#LOC]. | 5154 |
| 3350-0134 | Hydraulic hose reel Hannay model EF2516-17-18 for use with TNT brand tools. Includes rollers (captive type). Does not include hydraulic hose. Location: [#LOC]. | 2696 |
| 3350-0135 | Remote actuation hydraulic valve for hydraulic tool utility (reel outlet etc). Includes TNT RV-120 valve and hydraulic supply lines run from dealer supplied tool pump/power unit to RV120 valve and from RV-120 valve to hydraulic utility (reel outlet etc). Lines between RV-120 valve and reel to have quick connect fittings. RV-120 valve location: Front Bumper. | 2124 |
| 3350-0136 | The lead lines connecting the hydraulic tool outlet valve to the power unit shall have #6 FJIC connections on the power unit side and #6 MNPT connections on the valve side. | 54 |
| 3350-0137 | Air reel w/electric rewind 100' of .375" hose plumbed to the cascade system for low pressure utility air. Includes 100' 3/8" low pressure air hose rollers and ball stop (controls for reel included with breathing air system). Location: [#LOC]. | 2186 |
| 3350-0138 | Upgrade hydraulic hose on a reel to Hurst brand yellow/grey with Streamline fitting (EA). | 2938 |
| 3350-0139 | A slide out and hinged roller assembly. Roller shall be Hannay Reels 4 way roller 2.5" opening mounted on a slide out bracket attached up high on the side walls of compartment L2. | 358 |
| 3350-0140 | CMW model 6011 dual reel electric cord and hydraulic hose reel combo. Includes 100' of 10/4 yellow cord and 100' of 5000 PSI [#COL] (vendor supplied) hydraulic hose compatible with Hurst tools. Location: [#LOC]. | 8862 |

| Item No. | Description | |
|---|---|---|
| 3350-0142 | CMW model 6011 dual reel electric cord and hydraulic hose reel combo. Includes 100' of 10/3 black cord and 100' of 10500 PSI [#COL] (vendor supplied) hydraulic hose compatible with TNT tools. Location: [#LOC]. | 8862 |
| 3350-0143 | Hannay dual hydraulic hose reel model TEF2516-17-18 for use with Hurst 5000psi hose. Painted graphite. Roller assemblies selected separately. Does not include hydraulic hose or lead in lines. Location: [#LOC]. | 3483 |
| 3350-0144 | CMW model 6022 dual hydraulic hose reel for use with 10500 PSI Amkus tools shall be provided and installed. Includes two (2) sets of 200' 1/4" twinline hose (up to 10500 PSI) hose guides and ball stops. Location: [#LOC]. Hose Color: [#COL]. | 11818 |
| 3350-0145 | CMW model 6011 dual hydraulic hose reel for use with 10500 PSI Amkus tools shall be provided and installed. Includes two (2) sets of 100' 1/4" twinline hose (up to 10500 PSI) hose guides and ball stops. Location: [#LOC]. Hose Color: [#COL]. | 10760 |
| 3350-0146 | CMW model 6011 dual hydraulic hose reel for use with 10500 PSI tools. Reel SHALL NOT be supplied with hose or ball stops. Location: [#LOC] | 5154 |
| 3350-0147 | Hannay dual hydraulic hose reel model TEF2516-17-18 for use with TNT 10500 psi hose. Painted graphite. Roller assemblies selected separately. Does not include hydraulic hose or lead in lines. Location: [#LOC]. | 3798 |
| 3350-0148 | Hannay dual hydraulic hose reel model TEF2516-17-18 for use with 105000psi hose. Painted graphite. Roller assemblies selected separately. Does not include hydraulic hose or lead in lines. Location: [#LOC]. | 3798 |
| 3350-0149 | Low Pressure Utility Air Hose Reel assembly with 175' 3/8 in. low pressure air hose and mini panel shall be plumbed to the CAF system for low pressure utility air. Locate in [#LOC]. | 2759 |
| 3360-0013 | Zico access ladder. Includes required step lights. | 1926 |
| 3360-0050 | Divider roof compartment. Adjustable dividers shall be installed in each roof compartment. The divider shall span from front to rear and be adjustable left to right. The use of Unistrut or equal materials shall providefor adjustability as required for each divider. The divider plate shall be 3/16" smooth aluminum. Locate (1) divider in each roof top compartment. | 1059 |
| 3360-0085 | Horizontal air bag module for three (3) customer furnished air bags. Bags will be Genesis brand. Locate offset rearward on floor in compartment R2. See specifications for details. | 1173 |
| 3365-0002 | Recessed folding ladder storage compartment located [#LOC]. Compartment sized to store a 10' ladder with feet. | 633 |
| 3365-0003 | Overhead Zico storage rack to have a job color painted door. | 260 |
| 3365-0004 | (2) pike pole storage tubes. Locate inboard side of ladder rack with pike pole hooks stored in the up position. | 498 |
| 3365-0005 | Drop Down Fold-A-Tank Rack. Rack to hold [#LOC] gallon portable tank. | 1754 |
| 3365-0010 | (3) pike pole storage tubes. Locate inboard side of rack with pike pole hooks stored in the up position. | 746 |
| 3365-0011 | Floor mounted roll-out tray. Includes 250lbs. tray capacity. Mount on [#LOC] floor. | 747 |
| 3365-0012 | Recessed folding ladder and pike pole storage compartment located [#LOC]. Compartment sized to store a 10' ladder with feet and (2) pike poles. | 993 |
| 3365-0020 | Zico electric drop-down ladder rack. Includes spacer brackets with ladder rack controller located on the officer side pump panel. | 5609 |
| 3365-0021 | Manual Operated Aluminum Drop Down Ladder Rack. Includes (2) assist lift/lower handles and securing pins (accessable from ground) on each end.Ladder hold downs to secure (1) 2-section extension and (1) roof. | 2643 |
| 3365-0023 | Ladder storage through tank for (1) 2-section 24' extension (1) 14' roof (1) 10' attic with feet and (2) pike poles. Reduces selected water tank capacity by approximately 250 gallons for pumpers and 300 gallons for tankers. | 3191 |
| 3365-0024 | Ladder storage thru tank for (1) 3-section 35' extension (1) 14' roof (1) 10' attic with feet and (2) pike poles. Reduces selected water tank capacity by approximately 250 gallons for pumpers and 300 gallons for tankers. | 3474 |
| 3365-0025 | Attic ladder mounting brackets (PR). Locate [#LOC]. | 353 |
| 3365-0026 | Zico pike pole mounting brackets (PR). Locate on top of Zico drop-down ladder rack. | 189 |
| 3365-0027 | Zico attic ladder mounting brackets (PR). Locate on top of Zico drop-down ladder rack. | 400 |
| 3365-0028 | Hard Suction Storage Rack. Driver side compartment top. Includes spring hold downs and scuff plates behind spring mounts (as applicable). | 424 |
| 3365-0029 | Hard suction storage box (pr). Stored (1) each side below "T" of tank. Includes hinged door with push-button latch. | 625 |
| 3365-0030 | Double Hard Suction Storage Rack for 10' hard suction hoses. Driver side compartment top. Includes spring hold downs with scuff plates (as applicable) | 840 |
| 3365-0031 | Hard Suction Storage Rack. Officer side in adjustable track above ladders (if applicable). Includes spring hold downs and scuff plates. | 442 |
| 3365-0032 | Hard Suction Storage Box. Stored below driver side "T" of tank. Includes hinged door with push-button latch. | 314 |
| 3365-0033 | Recessed pike pole storage compartment located [#LOC]. Compartment sized to store (2) pike poles. | 512 |

| Item No. | Description | |
|---|---|---|
| 3365-0034 | (2) aluminum pike pole storage tubes. Locate [#LOC]. | 364 |
| 3365-0035 | Hard Suction Storage Rack. Officer side compartment top. Includes spring hold downs and scuff plates behind spring mounts (as applicable). | 424 |
| 3365-0040 | SCBA/Fire Extinguisher storage rack. Locate in [#LOC]. To hold (6) bottles- (2) wide/(3)high. Bottles to be stored angled upward in the compartment. The bottom and sides are to include ribbed rubber inserts. | 574 |
| 3365-0041 | Hard suction storage box. Located in the officer side hose bed. Includes drop down door (wired to door ajar) w/push-button latch(es) hose bed style top and nylatron flooring (no divider). Box to hold [#LOC] tube(s). | 1799 |
| 3365-0043 | Triple Hard Suction Storage Rack. Driver side compartment top. Includes spring hold downs and scuff plates behind spring mounts (as applicable). | 1258 |
| 3365-0046 | The driver side full length tunnel to store (2) 6" x 10' hardsuction hoses. Each to be stored individually and accessed by a vertically hinged diamond plate door with a push-button latch. Door to wired to the door ajar indicator in the cab. | 644 |
| 3365-0047 | The driver side half length tunnel to store (3) backboards. Each to be stored individually with stop bracket 75" back from opening composite material on floor and accessed by a vertically hinged door at rear with a push-button latch. Door to wired to the door ajar indicator in the cab. | 691 |
| 3365-0048 | Hard Suction Storage Box. Stored below officer side "T" of tank. Includes hinged door with push-button latch. | 314 |
| 3365-0051 | Portable Tank Storage Box. Located in the officer side hosebed. Includes drop down door (wired to door ajar) w/push-button latches hosebed style top and nylatron flooring (no divider). Box to hold [#LOC] gallon portable tank. | 1799 |
| 3365-0052 | Over the hosebed ladder rack. Includes framing (with a sanded finish) and mounting points. Ladder storage box to be center mounted with diamond plate front box. | 2254 |
| 3365-0056 | Ladder storage thru tank for (2) 6" x 10' hardsuction hoses (2) pike poles and (1) 10' attic ladder. Provide retaining straps to hold the hardsuctions stationary when stored. Reduces selected water tank capacity by approximately 250 gallons. | 3581 |
| 3365-0057 | The driver side full length tunnel to store (3) 6" x 10' hardsuction hoses. Each to be stored individually and accessed by a vertically hinged access door with a push-button latch. Door to wired to the door ajar indicator in the cab. | 965 |
| 3365-0058 | Recessed pike pole storage compartment located [#LOC]. Compartment sized to store (3) pike poles. | 765 |
| 3365-0059 | SCBA/Fire Extinguisher storage rack. Locate in [#LOC]. To hold (4) bottles- (2) wide/(2)high. Bottles to be stored angled upward in the compartment. The bottom and sides are to include ribbed rubber inserts. | 385 |
| 3365-0060 | Obsolete/ Used sales code 3365-0498/Ladders to be enclosed in pump compartment. Smooth plate box to enclose ladders in pump area. | 521 |
| 3365-0061 | Hard Suction Storage Racks. Driver side hose bed side with adjustable tracks. Includes spring hold downs and scuff plates behind spring mounts (as applicable). | 973 |
| 3365-0065 | (4) Hard Suction Storage Racks. Driver side hosebed side with adjustable tracks. Includes spring hold downs and scuff plates behind spring mounts (as applicable) | 1541 |
| 3365-0070 | Recessed folding ladder and pike pole storage compartment located below officer side "T" of the tank. Compartment sized to store a 10' ladder with feet and (2) pike poles. | 1486 |
| 3365-0071 | Ladder storage thru tank for (1) 2-section 24' extension (1) 14' roof (1) 10' attic with feet and (2) pike poles (1) 10' with d-handle and (1) 6' with d-handle. Reduces selected water tank capacity by approximately 250 gallons. | 3508 |
| 3365-0072 | Door aluminum smooth plate with d-ring latch for thru the tank ladder tunnel. Location: B1 compartment. | 1293 |
| 3365-0073 | (4) 6' pike pole storage tubes in the rear transverse compartment ceiling mounted. Locate for compartment L3 access with pike pole hooks stored in the down position. (1) pike pole caution tags to be provided one each side mounted inside the compartment at the offset. | 1192 |
| 3365-0074 | SCBA/Fire Extinguisher storage rack. Locate in [#LOC]. To hold (6) bottles- (3) wide/(2)high. Bottles to be stored angled upward in the compartment. The bottom and sides are to include ribbed rubber inserts. | 574 |
| 3365-0075 | Officer side vertical storage tunnel. For use with low hose bed. Tunnel to hold: [#LOC]. Includes vertical hinged rear diamond plate door(s) with push-button latch. | 2263 |
| 3365-0077 | (2) pike pole storage tubes. Locate outboard side of rack with pike pole hooks stored in the up position. | 498 |
| 3365-0078 | (3) pike pole storage tubes. Locate outboard side of rack with pike pole hooks stored in the up position. | 746 |
| 3365-0079 | 2-arm ladder rack on officer side. The ladder rack includes amber lights on each end to visually indicate when the rack is in motion. Restricts the top folding step (if optioned) from closing completely. Includes mounting bracket (if required matching rear compartment face or compartment wrap finish) for components mounted on rear compartment face. | 12989 |
| 3365-0081 | 2-Arm Ladder Rack to be painted job color. | 3348 |
| 3365-0083 | Zico pike pole mounting brackets (PR). Locate [#LOC]. | 189 |

| Item No. | Description | |
|---|---|---|
| 3365-0085 | Zico pike pole mounting brackets with straps (PR). Locate [#LOC]. | 208 |
| 3365-0088 | Double hard suction hose storage tray. Locate on inboard side of overhead ladder rack. Includes (2) securing straps per tray. | 927 |
| 3365-0090 | Officer side half length vertical storage tunnel. For use with low hosebed. Tunnel to hold: (2) backboards (1) AEL 12' 2-section ladder (1) 4' D-handled pike pole (1) 8' pike pole and (1) 6' pike pole. Includes vertically hinged rear diamond plate door with push-button latch. Pike poles to be located down low in tunnel with backboards and ladder located above. | 1701 |
| 3365-0091 | Recessed folding ladder storage compartment located officer side just below hosebed. Compartment sized to store a 10' ladder with feet. | 756 |
| 3365-0092 | (2) pike pole storage tubes. Locate in driver side roof top compartment with pike pole hooks stored in the up position. | 498 |
| 3365-0094 | Storage tunnel access (contents to be noted). Includes vertically hinged door (to match material of pump access door) with push-button latch(s) and wired to door ajar indicator. Door to [#LOC] of the body/water tank. | 348 |
| 3365-0095 | Rear mount beside tank storage tunnel contents. Includes brackets capable of securing (1) two section (1) roof (1) 10' attic with feet and (2) pike pole tubes. | 2888 |
| 3365-0096 | Zico Hydraulic Drop Down Ladder Rack. Includes diamond plate spacer brackets with ladder rack controller located on the officer side pump panel. | 7324 |
| 3365-0097 | 12' Hard suction hose storage tray. Locate on inboard side of overhead ladder rack. Includes (2) securing straps. | 581 |
| 3365-0098 | 12' Hard Suction Storage Rack. Driver side compartment top. Includes spring hold downs and scuff plates behind spring mounts (as applicable) | 634 |
| 3365-0099 | SCBA/Fire Extinguisher storage rack. Locate in R1 mounted to lower ceiling below compartment offset. To hold (4) bottles to be stored angled upward in the compartment. The bottom and sides are to include ribbed rubber inserts. Each storage slot to be 11" wide x 11" high. | 1990 |
| 3365-0100 | Hard Suction Storage Rack. Officer side compartment top. Includes spring hold downs and scuff plates behind spring mounts (as applicable). Rack to hold 5' hard suction. | 291 |
| 3365-0101 | Officer side vertical storage tunnel. For use with low hosebed. Lower section of tunnel to hold: 2-Section 24' 14' roof 10' attic and (2) pike poles. Upper section of tunnel to hold: 2-Section AEL-10 attic ladder and (1) 300' of 1.75" DJ hose. Upper section includes ladder stop 90" back from opening and bolt-in divider between ladder and hose storages. Includes vertically hinged rear diamond plate door(s) with push-button latch(es). The diamond compartment top of tunnel to be hinged for access to dry lay of hose. | 3599 |
| 3365-0102 | SCBA/Fire Extinguisher storage rack. Locate in [#LOC]. To hold (4) bottles- (4)wide/(1)high. Bottles to be stored angled upward in the compartment. The bottom and sides are to include ribbed rubber inserts. | 385 |
| 3365-0103 | SCBA/Fire Extinguisher storage rack. Locate in [#LOC]. To hold (6) bottles- (6)wide/(1)high. Bottles to be stored angled upward in the compartment. The bottom and sides are to include ribbed rubber inserts. | 574 |
| 3365-0104 | Double hard suction hose storage tray. Locate (1) each side on inboard side of overhead ladder rack(s). Includes (2) securing straps per tray. For use with 13' hard suction hoses. | 2543 |
| 3365-0107 | SCBA/Fire Extinguisher storage rack. Locate in [#LOC]. To hold (12) bottles- (4) wide/(3)high. Bottles to be stored angled upward in the compartment. The bottom and sides are to include ribbed rubber inserts. | 1146 |
| 3365-0108 | 10' folding ladder with feet. Locate in officer side roof top compartment. | 756 |
| 3365-0109 | (4) pike pole storage tubes. Locate inboard side of rack with pike pole hooks stored in the up position. | 990 |
| 3365-0110 | Recessed pike pole storage compartment located below officer side "T" of the tank. Compartment sized to store (3) pike poles. | 765 |
| 3365-0111 | Hard suction hose storage tray. Locate on [#LOC]. Includes (2) securing straps. For use with 13' hard suction hoses. | 1116 |
| 3365-0112 | Over the hosebed ladder rack. Includes framing (with a sanded finish) and mounting points. Ladder storage box to be adjustable side to side with diamond plate front box. The ladder storage rack to have locking points of driver side outboard center and officer side outboard. The framework of the ladder rack to be 9.5" high. | 3485 |
| 3365-0114 | Recessed pike pole storage compartment located [#LOC]. Compartment sized to store (3) pike poles. Pike pole box to be 7" deep. | 1393 |
| 3365-0115 | Ladder storage thru tank for (1) 2-section 24' extension (1) 14' roof (1) 10' attic with feet and (3) pike poles. Reduces selected water tank capacity by approximately 250 gallons. | 3262 |
| 3365-0116 | Ladder tunnel to extend to rear of body (over pump/plumbing). Extension to be aluminum and bolt-on for removal for pump maintenance. | 942 |
| 3365-0118 | (3) pike pole storage tubes. Locate [#LOC]. | 546 |
| 3365-0120 | SCBA/Fire Extinguisher storage rack. Locate in [#LOC]. To hold (12) bottles- (6) wide/(2)high. Bottles to be stored angled upward in the compartment. The bottom and sides are to include ribbed rubber inserts. | 1146 |

| Item No. | Description | |
|---|---|---|
| 3365-0121 | Hosebed storage box for (1) scoop stretcher (3)backboards and (4) pike poles. Scoop stretcher located in lower area of storage with stop located 67" back backboards located in middle area with stop 74" back and pike poles located in upper area for (2) 6' and (2) 8' pike poles. Includes vertically hinged door (wired to door ajar) with push-button latches. Located on officer side of hosebed. | 1799 |
| 3365-0122 | Officer side vertical storage tunnel. For use with low hosebed. Tunnel to hold: 2-Section 24' 14' roof 10' attic and (2) pike poles. Upper storage area to have hinged diamonad plate top for storage of misc. items. Includes vertically hinged rear diamond plate door(s) with D-ring latch. | 3494 |
| 3365-0124 | Recessed pike pole storage compartment located below officer side compartment top. Compartment sized to store (2) pike poles. Recessed box to be 10" high for Boston Roof Hooks. | 1161 |
| 3365-0125 | Officer side vertical storage tunnel. For use with low hosebed. Tunnel to hold: 2-Section 24' 14' roof 10' attic (6) pike poles and (2) 6" x 10' hardsuction hoses (individually vertically stacked). (2) pike poles will be in ladder tunnel and (2) in each hard suction storage. Includes vertically hinged rear diamond plate door(s) with push-button latch. | 3208 |
| 3365-0126 | Pike pole tube(s) on overhead ladder rack to be mounted flush with rear of body. | 369 |
| 3365-0128 | Pike pole storage tube (1) One. Locate [#LOC]. | 184 |
| 3365-0129 | Officer side half length vertical storage tunnel. For use with low hosebed. Tunnel to hold: (2) backboards (1) 4' D-handled pike pole (1) 8' pike pole and (1) 6' pike pole. Make box for 4' D-handle pike pole 56" long. Includes vertically hinged rear diamond plate door with push-button latch. Pike poles to be located down low in tunnel with backboards located above. | 1701 |
| 3365-0130 | OBSOLETE - USE HYDRAULIC - Zico Electric Drop Down Fold-A-Tank Rack. Rack to be capable to hold [#LOC] gallon portable tank. Locate on driver side of body. Includes diamond plate cover and mounting hardware. | 10172 |
| 3365-0134 | Double Hard Suction Storage Rack. Driver side compartment top. Includes spring hold downs with scuff plates (as applicable). For use with 11' hard suction hoses. | 1490 |
| 3365-0135 | Stop bracket set for Zico HLAS ladder rack. Optional bracket for additional ladder rack stability in the up position. | 246 |
| 3365-0137 | Pike pole. Locate (1) pike pole on officer side compartment top with pike pole hook stored in the up position. Mount with tulip clip(s) for use with D-handle pike pole. | 107 |
| 3365-0138 | SCBA/Fire Extinguisher storage rack. Locate in [#LOC]. To hold (9) bottles- (3) wide/(3)high. Bottles to be stored angled upward in the compartment. The bottom and sides are to include ribbed rubber inserts. | 862 |
| 3365-0140 | Stokes Basket Storage Box. Located in the officer side hosebed. Includes Nylon black strap hosebed style top and nylatron flooring (no divider). Box to hold (1) Junkin JSA-200 stokes basket. Includes stop located 86" back from opening. Vinyl hosebed cover to extend down over this storage. | 2371 |
| 3365-0142 | Officer side hosebed storage box to store a (1) 26' 3-section (1) 12' roof (1) 10' attic ladder and (3) pike poles. Includes vertically hinged rear diamond plate door with push-button latches. | 3211 |
| 3365-0143 | Hard Suction Storage Rack. Locate: [#LOC]. Includes (1) spring hold down and scuff plates behind spring mount (as applicable). Includes diamond plate box with air deflector to hold end of hose in place. | 846 |
| 3365-0148 | Backboard Storage Box. Located in the driver side hosebed. Includes drop down door (wired to door ajar) w/push-button latch hosebed style top and composite flooring. Box to hold (1) backboard. Includes stop bracket approximately 74" back from opening. Includes short hosebed divider located on top of storage area. | 2042 |
| 3365-0162 | Hard suction racks (one each side) with job color painted box ends (rearward of body only). Racks to be positioned on compartment top so forward coupling end rest flush with end of forward compartment top. Each rack to have (1) spring hold down located as far forward as possible (no hold down at rear). Racks to include extension so rear coupling rest on the rack in the stowed position. Rearward box to be smooth plate and designed to fit around the rack extension. Size box to be 10"x 10"x 10". | 2213 |
| 3365-0163 | Hard Suction Storage Box Vert. Located in the [#LOC] hose bed. Includes vertical hinged door (wired to door ajar) w/push-button latches and nylatron flooring. Box to hold (2) 10' hard suction hoses vertical stacked. | 1799 |
| 3365-0164 | Backboard Storage Box. Located in the officer side hosebed. Includes drop down door (wired to door ajar) w/push-button latch hosebed style top and composite flooring. Box to hold (1) backboard. Includes stop bracket approximately 74" back from opening. Includes 45 degree angle plate at rear of the backboard storage. | 2042 |
| 3365-0165 | Double hard suction storage rack. One (1) rack located above the other. Officer side compartment top. Includes spring hold downs with scuff plates (as applicable). | 840 |
| 3365-0173 | Hard Suction Storage Box. Stored below officer side just below the hosebed. Includes hinged door with push-button latch. | 672 |
| 3365-0174 | Hold down brackets to secure a (3) section extension (2) section extension and roof ladder. Requires additional ladder bracket height due to 6 sections of ladders. | 727 |

| Item No. | Description | |
|---|---|---|
| 3365-0175 | Backboard Storage Box. Located in the officer side hose bed. Includes vertical hinged door (wired to door ajar) w/push-button latch hose bed style top if applicable to hose bed depth or smoothplate aluminum if no hose shall be stored above and composite flooring. Box to hold (2) backboards. | 2042 |
| 3365-0176 | Hosebed Storage Box. Located in the officer side hosebed. Includes drop down door (wired to door ajar) w/push-button latch(es) hosebed style top and nylatron flooring (no divider). Box to hold (1) stokes basket and (3) backboards. Includes stop bracket approximately 88" back from opening. Stokes basket 86" long x 24" wide x 8" high backboards will stow inside stokes basket. | 2042 |
| 3365-0177 | Hold down brackets to secure a (3) section extension ladder. | 215 |
| 3365-0178 | Storage box for (1) 8' Dry Wall pike pole. Located in officer side roof top compartment. | 342 |
| 3365-0179 | Officer side vertical storage tunnel behind reduced upper depth right side compartments. Tunnel to hold: 24' 2-section and 14' roof plus (2) pike poles and a folding ladder. Includes vertically hinged rear smooth plate door with bent D-ring latch. | 2263 |
| 3365-0180 | Backboard storage box located in the driver side of hosebed 9.75" off hosebed side wall. Storage to be 22" wide x 5" high. Includes drop down door (wired to door ajar) w/push-button latch hosebed style top and composite flooring. Box to hold (2) backboards. Includes stop bracket approximately 74" back from opening. Includes 45 degree angle plate at rear of the backboard storage. | 2042 |
| 3365-0181 | Stop bracket to be located approximately 50" back in upper section of driver side of storage tunnel above the hard suction hoses. | 143 |
| 3365-0183 | Hard suction storage rack. Locate [#LOC]. Includes NFPA retaining strap(s). | 297 |
| 3365-0184 | Zico hydraulic drop down portable tank rack. Rack located to [#LOC] of body. Rack sized for [#COL] gallon aluminum frame portable tank. The control switching to be located on the side pump panel with the rack being in full view of the operator during operations. | 6116 |
| 3365-0185 | Zico overhead ladder rack. Includes electrical relay with cover in compartment adjacent to the storage rack. Locate rack to [#LOC] of body. The control switching to be located at the pump module area with the rack being in full view of the operator during operations. | 7337 |
| 3365-0186 | Zico overhead portable tank rack. Includes electrical relay with cover in compartment adjacent to the storage rack. Locate rack to [#LOC] of body. Rack sized for [#COL] gallon aluminum frame portable tank. | 7337 |
| 3365-0187 | Zico drop down rack to have diamond plate cover between outboard rack assemblies. | 713 |
| 3365-0188 | Zico drop down rack to have smooth plate cover between outboard rack assemblies. Cover to be painted job color. | 869 |
| 3365-0189 | Manual drop-down portable tank storage rack. Includes forward and rearward securing clamps with manual releases. Locate rack to [#LOC] of body. Rack sized for steel framed [#COL] portable tank. | 2086 |
| 3365-0190 | Manual drop down rack to have diamond plate cover over the forward rearward upper and outboard sides. Includes hand rails along the outboard front and rear and (1) on each end mounted on the upper area. | 687 |
| 3365-0191 | Manual drop down rack to have smooth plate cover over the forward rearward upper and outboard sides. Includes handrails along the outboard front and rear and (1) on each end mounted on the upper area. Cover to be painted job color. | 1005 |
| 3365-0192 | Internal aluminum frame portable tank storage with vertically hinged smooth plate door painted job color (wired to door ajar) with D-ring latch. Access door to be located to the rear of the [#LOC] body. Included is a composite material floor overlay and a tank stop for use with a [#COL] aluminum frame portable storage tank. | 833 |
| 3365-0193 | Portable storage tank thru water tank. To be capable of storing a [#COL] aluminum frame portable storage tank. Storage thru tank will reduce overall gallon capacity of water tank. | 2466 |
| 3365-0194 | Double hard suction storage rack. Locate [#LOC]. Includes NFPA retaining strap(s). | 629 |
| 3365-0195 | Hard suction hose storage tray. Locate on inboard side of [#LOC] overhead storage rack. Includes (2) NFPA retaining straps. | 467 |
| 3365-0196 | Ladder storage in hosebed for the following: (1) 2-section extension (1) roof ladder (1) attic and (2) pike poles. Extension and roof ladders stored nested. Includes (1) hosebed divider with squared off upper rear vertically hinged (to swing into hosebed area) door with latch (wired to door ajar indicator) and composite material overlay on hosebed flooring. Upper area open and main hosebed cover to be used to cover top area of ladder storage area. Storage located to [#LOC] of hosebed. | 1258 |
| 3365-0197 | Portable storage tank in hosebed for the following: [#COL] gallon aluminum frame tank. Includes (1) hosebed divider with squared off upper rear vertically hinged (to swing into hosebed area) door with latch (wired to door ajar indicator) and composite material overlay on hosebed flooring. Upper area open and main hosebed cover to be used to cover top area of storage area. Storage located to [#LOC] of hosebed. | 1258 |
| 3365-0198 | Storage box for (1) 10' length of hard suction hose. Includes vertically hinged door with latch (wired to door ajar indicator). Reduces selected water tank capacity by approximately 100 gallons on Tankers. Locate to [#LOC] below "T" of water tank. | 709 |

| Item No. | Description | |
|---|---|---|
| 3365-0199 | Zico electric drop-down ladder rack. Rack located to [#LOC] of body. The control switching to be located on the side pump panel with the rack being in full view of the operator during operations. | 6116 |
| 3365-0202 | Hard Suction Storage Rack. Driver side in adjustable track above ladders. Includes spring hold downs and scuff plates. | 442 |
| 3365-0203 | Zico electric drop-down hard suction rack. Rack located to [#LOC] of body. The control switching to be located on the side pump panel with the rack being in full view of the operator during operations. The rack includes (2) main rack mounted 10' trays. | 6116 |
| 3365-0206 | Storage tunnel capable of holding: (1) 2-Section (1) Roof (1) Attic (2) pike poles (1) backboard storage sleeve between 2-section and roof ladder and (1) 8' block storage with stop above 2-section ladder in Officer Side Storage Tunnel. Includes ladder tunnel door to hinge to officer side of truck. | 847 |
| 3365-0208 | Horizontal ladder bracket. Location and type of ladder: in officer side of hosebed storage pan to hold Little Giant model 17. | 294 |
| 3365-0209 | Officer side vertical storage tunnel. For use with low hosebed. Tunnel to hold: 2-Section 24' 14' roof 10' attic and (2) pike poles. Includes vertically hinged rear diamond plate door with push-button latch. Upper storage area to have an open top and run full legnth of the body. Upper area to have hosebed style flooring. | 3471 |
| 3365-0214 | Hard suction storage thru tank for (2) 5" x 15' hard suction hoses. Includes vertical hinged door wired to door ajar with push button latch. Reduces selected water tank capacity by approximately 200 gallons. | 3191 |
| 3365-0217 | Officer side vertical storage tunnel. For use with low hosebed. Tunnel to hold: 3-Section 35' 14' roof 10' attic and (3) pike poles. Pike poles to be stored in upper storage area. Includes vertically hinged rear diamond plate door(s) with push-button latch. | 2263 |
| 3365-0218 | Recessed D-handle pike pole storage compartment located below officer side compartment top. Compartment sized to store (2) 6' D-handle pike poles. | 765 |
| 3365-0219 | Diamond plate storage compartment located on officer side compartment top. Compartment sized to store (1) 10' ladder with feet and (2) 6' D-handle pike poles. | 765 |
| 3365-0220 | Storage box for (1) 6" x 10' hard suction hose. Includes vertically hinged swing-out door with push-button latch (wired to door ajar). Box to be smooth plate and painted job color. Located [#LOC]. | 610 |
| 3365-0221 | Driver side vertical storage tunnel. For use with low hosebed. Tunnel to hold: 2-Section 24' 14' roof 10' attic and (2) pike poles. Includes vertically hinged rear diamond plate door(s) with push-button latch. | 2263 |
| 3365-0222 | Upper hosebed storage area above driver side compartments and officer side ladder/storage tunnel or compartments as applicable. Upper storage areas to have an open top and run length of the hosebed area. Includes hosebed style flooring. | 2204 |
| 3365-0223 | Hard Suction Storage Rack. Officer side on compartment top. Rack to be 118" in length and be held back 9" from the front of the compartment top. Includes spring hold downs and scuff plates. | 442 |
| 3365-0226 | Hosebed ladder storage box with diamond plate top. Located centered in hosebed and to secure from driver to officer: (1) 10' attic w/feet (in a box) w/(2) 10' pike pole tubes mounted on top (1) PRL-12 & (1) PEL3-24. Ladders to be stored on beam. Included are (2) hosebed dividers with squared ends diamond plate top and a vertically hinged diamond plate door (hinged to officer side) wired to the door ajar indicator. | 1496 |
| 3365-0229 | Hosebed Storage Box. Located in the officer side hosebed between aluminum hosebed cover center divider and officer side hosebed wall (Approx 34.875" W X 12" interior height). Includes drop down door (wired to door ajar) w/push-button latches hosebed style top composite flooring (1) vertical divider full depth of hosebed held 12" short of rear - located 5" off center divider to hold (3) 10' pike pole tubes. (1) horizontal divider full depth of hosebed and approx 29.625" wide X approx 7.875" off hosebed floor to form upper and lower storage. Lower storage to have a stop at 72". Upper storage to have a vertical divider approx 18" off driver side divider with a stop at 72" for backboard storage. Storage box to be sealed as tight as possible from water and road grime. | 3007 |
| 3365-0236 | Officer side vertical storage tunnel behind reduced upper depth right side compartments. Tunnel to hold: 24' 2-section and 14' roof plus (4) pike poles and a folding ladder. Includes vertically hinged rear smooth plate door with bent D-ring latch. | 2625 |
| 3365-0238 | Folding ladder and pike pole storage compartment located in driver side of hosebed. Includes drop down door with push button latch. Compartment sized to store a 10' ladder with feet and (2) pike poles. | 993 |
| 3365-0245 | Pike pole tubes in officer side storage tunnel to be modified to hold (1) ARH-60 and (1) ARH-72 pike poles. | 225 |
| 3365-0246 | Officer side vertical storage tunnel behind reduced upper depth right side compartments. Tunnel to hold: 24' 2-section and 14' roof plus (2) pike poles and a folding ladder. Includes vertically hinged rear 3/16" treadplate door with bent D-ring latch. | 2415 |
| 3365-0253 | Ladder storage thru tank for (2) 6" x 10' hardsuction hoses. Reduces selected water tank capacity by approximately 150 gallons. | 1807 |

| Item No. | Description | |
|---|---|---|
| 3365-0254 | Hard suction storage box with cargo net cover at rear. Located in B1 compartment to be in-line with thru the tank tunnel. | 662 |
| 3365-0258 | Recessed pike pole storage compartment located officer side "T" of the tank. Compartment sized to store (3) pike poles. Center pike pole will be a multi -purpose" hook. | 765 |
| 3365-0259 | Recessed pike pole storage compartment located officer side just below the hosebed. Compartment sized to store (2) pike poles. | 512 |
| 3365-0260 | Ladder storage thru tank for (1) 2-section 24' extension (1) 14' roof (1) 10' attic with feet (3) pike poles and (1) backboard. Reduces selected water tank capacity by approximately 300 gallons. | 3474 |
| 3365-0262 | Double Hard Suction Storage Rack for 8' hard suction hoses. Driver side compartment top. Includes spring hold downs with scuff plates (as applicable) | 908 |
| 3365-0265 | Recessed storage compartment located officer side just below hosebed. Compartment sized to store (1) 10' ladder with feet offset to left and (1) 6' pike pole offset to right tube to be set back 6" from opening. | 906 |
| 3365-0267 | Officer side vertical storage tunnel. For use with low hose bed. Tunnel to hold: [#LOC]. Includes vertically hinged rear smooth plate door(s) with push-button latch. | 2263 |
| 3365-0271 | Ladder storage box in driver side of hosebed. Dimensions to be 25" wide x 8" high x length of hosebed. Includes ladder stop 66" back from opening and diamond plate drop down door with push button latches (wired to door ajar indicator) and composite material overlay on hosebed flooring. | 1258 |
| 3365-0272 | Hard Suction Storage Box. Located in the driver side hosebed. Includes vertical hinged door (wired to door ajar) w/push-button latches and nylatron flooring. Box to hold two (2) 6" X 10' hard suction hoses. | 1799 |
| 3365-0274 | Hard Suction Storage Box. Located horizontal in the officer side hosebed. Includes vertical hinged door (wired to door ajar) w/push-button latches and nylatron flooring. Box to hold two (2) 6" X 14' hard suction hoses. | 1799 |
| 3365-0275 | Hard suction storage rack for (1) 6" X 14' suction hose. Locate [#LOC]. Includes NFPA retaining strap(s). | 450 |
| 3365-0276 | Zico pike pole mounting brackets (PR). Locate on top of Zico drop-down ladder rack. Brackets to be for D-ring pike poles. | 189 |
| 3365-0278 | Officer side vertical storage tunnel. For use with low hosebed. Tunnel to hold: 2-Section 24' 14' roof 10' attic and (2) pike poles. Includes vertically hinged rear diamond plate door(s) with push-button latch. The pike poles and attic ladder to be stored below the 2-section and roof ladders. Ladder tunnel will not extend to top of the body the area above the ladder tunnel to have hosebed style flooring. | 3471 |
| 3365-0280 | Hard Suction Storage Box. Located horizontal in the officer side hosebed. Includes vertical hinged dia plate door (wired to door ajar) w/push-button latches and nylatron flooring. The storage area shall be sized to hold two (2) 6" X 10' long hard suction hoses laying side-by-side. | 1799 |
| 3365-0281 | Hard Suction Storage Box. Located horizontal in the officer side hosebed. Includes vertical hinged door (wired to door ajar) w/push-button latches and nylatron flooring. Box to hold two (2) 6" X 13' hard suction hoses. | 1799 |
| 3365-0283 | Divider Long. To run full length of hose bed above ladder tunnel (front to rear). | 561 |
| 3365-0284 | Officer side vertical storage tunnel behind reduced upper depth right side compartments. Tunnel to hold: 28' 2-section and 16' roof (2) pike poles and a folding ladder plus two 10' lengths of 6" hard suction hose above ladders together with a skinny backboard. Where ladders extend into the pump enclosure they shall be enclosed from the elements with aluminum treadplate. | 1939 |
| 3365-0285 | Officer side vertical storage tunnel. For use with low hosebed. Tunnel to hold: 2-Section 20' 12' roof 10' attic and (2) pike poles. Includes vertically hinged rear smooth plate door (to accommodate graphics/striping) with push-button latch. Upper storage area to have an open top and run full length of the body. Upper area to have hosebed style flooring. | 3471 |
| 3365-0286 | Officer side vertical storage tunnel behind reduced upper depth compartments. Tunnel to hold: 24' 2-section and 14' roof plus (2) pike poles and a folding ladder. Above ladders is storage area for a sheet rock hook and a pike pole with D-handle both 4' in length. Stops shall be provided ahead this storage area approximately 60" from the rear opening to prevent these items from sliding forward during transport. Includes vertically hinged rear smooth plate door with bent D-ring latch. | 2369 |
| 3365-0289 | Hard suction hose storage tray. Locate on inboard side of overhead ladder rack. Includes spring hold downs and scuff plates behind spring mounts (as applicable). | 494 |
| 3365-0290 | Ladder storage thru tank for (1) 3-section 30' extension (1) 14' roof (1) 10' attic with feet and (2) 10' pike poles. Reduces selected water tank capacity by approximately 300 gallons for pumpers and 350 gallons for tankers. | 3191 |
| 3365-0292 | Hard Suction Storage Box. Located in the driver side hosebed. Includes vertical hinged door (wired to door ajar) w/push-button latches and nylatron flooring. Box to hold one (1) 6" X 12' hard suction hoses. | 900 |
| 3365-0293 | Cover diamond plate for hydraulic ladder rack power supply. Location: [#LOC]. | 230 |
| 3365-0294 | There shall be a metal plate mounted to the side of the portable tank rack to assist in the application of the NFPA stripe and/or Lettering. | 191 |

| Item No. | Description | |
|---|---|---|
| 3365-0295 | Manual drop down portable tank storage rack. Includes forward and rearward securing clamps with manual releases. Locate rack to [#LOC] of body. Rack sized for an aluminum framed [#COL] portable tank. | 2086 |
| 3365-0297 | (1) Pike pole storage tube pike pole hook stored in the up position. (1) Dry wall hook storage using brackets to secure in place rather than tube. Locate inboard side of rack. | 616 |
| 3365-0298 | (5) Pike pole storage tubes. Locate inboard side of rack with pike pole hooks stored in the up position. | 1419 |
| 3365-0299 | Hard suction storage box. Located in the officer side hose bed. Includes a swing open door vertical hinged on the left hand side (inboard) and wired to door ajar w/push-button latch(es) hose bed style top and nylatron flooring (no divider). Box to hold [#LOC] tubes. | 1799 |
| 3365-0302 | Provision to store (4) Fire Department supplied 50' lengths of 2-1/2" high rise hose packs on right side compartment top. | 1308 |
| 3365-0303 | Four (4) pike poles and a folding ladder tucked behind ground ladders on the adjustable ladder tracks. | 1268 |
| 3365-0304 | Hard suction storage within the hosebed. (1) Hard suction tube shall be located on each side of the hosebed center divider. The rear and top hosebed covers shall be used for access. | 1799 |
| 3365-0305 | Provision to store (4) Fire Department supplied 50' lengths of 2-1/2" high rise hose packs on right side compartment top. (6) PAC ADJUSTAMOUNT brackets to secure hose. | 1713 |
| 3365-0306 | Backboard storage sleeve with containment strap(s). Located in L1 and R1 compartments just below compartment offset to be approximately 9" high x 27" wide as clearance permits. Locate as far forward as possible. | 1356 |
| 3365-0307 | Hard suction storage box horizontal side by side. Located in the officer's side hose bed. Includes lift-up door (wired to door ajar) w/bent D-ring latch hose bed style top and flooring. Box to hold (2) 6" x 10' long tubes. | 1799 |
| 3365-0308 | Hard Suction Storage Rack. Officer side in adjustable track below ladders (if applicable). Includes spring hold downs and scuff plates. | 442 |
| 3365-0309 | Hard Suction Storage Box with long handle tool storage trough with stop at 72". Stored at rear panel driver side for two (2) hoses. Includes vertical hinged smooth plate door and bent D-ring latch. | 770 |
| 3365-0310 | Hard suction storage box smooth plate side wall construction painted job color. Located on the [#LOC]. Includes vertically hinged door(s) (wired to door ajar) w/D-Ring latch(s). Box to hold (3) tubes and to extend to the back side of the L2 compartment and to be approximately the same height as L1 L2 compartments. | 1799 |
| 3365-0311 | Hard suction storage box with (2) pike poles (pr). Stored (1) each side below "T" of tank. Includes hinged door with push-button latch. | 1179 |
| 3365-0312 | Ladder storage thru tank for AlcoLite ladders (1) 3-section 35' extension (1) 16' roof (1) 10' attic with feet and (2) pike poles. Reduces selected water tank capacity by approximately 250 gallons for pumpers and 300 gallons for tankers. | 3474 |
| 3365-0316 | Storage box for (1) 15' length of hardsuction hose. Includes vertically hinged door with latch (wired to door ajar indicator). Locate [#LOC] side below "T" of water tank. | 826 |
| 3365-0319 | Hard Suction Storage Rack. Driver side compartment top. Includes spring hold downs and scuff plates behind spring mounts (as applicable). | 424 |
| 3365-0320 | Storage box on officer side compartment top with hinged full length side hinged down with butterfly latches (wired to door ajar). Storage to accomodate 250' of 2.5" DJ hose with nozzle for hi-rise pac with black dri-deck flooring. | 1161 |
| 3365-0321 | Horizontal ladder bracket Includes .187" smooth aluminum boot painted black durabak with ladder hold down. Location and type of ladder: [#LOC]. | 351 |
| 3365-0322 | Recessed New York hook and pike pole storage compartment located officer side just below the "T" of the tank to include a smooth plate door with thumb latch(s). Compartment sized to store (2) Fire Hooks Unlimited New York Hook Model RH-6 and RH-8 and (2) pike poles. | 993 |
| 3365-0323 | Double hard suction storage rack. Two (2) 2.5" or 3" x 10` hard suction hoses. One (1) next the other horizontally mounted. Includes spring hold downs with scuff plates (as applicable). Locate: Driver side compartment top. | 840 |
| 3365-0324 | Hard suction storage boxes welded one each side to upper body hose bed side sheets to be painted as applicable. Includes vertically hinged brushed stainless steel rear access doors and aluminum hose trays with forward travel limit stops. Requires minimum 88" high pumper body. | 2961 |
| 3365-0325 | Officer side vertical storage tunnel behind reduced upper depth right side compartments. Tunnel to hold: 35' 3-section and 14' roof (2) pike poles and a folding ladder. Where ladders extend into the pump enclosure they shall be enclosed from the elements with aluminum treadplate. Includes vertically hinged rear smooth aluminum door with bent D-ring latch. | 2263 |
| 3365-0326 | Recessed pike pole storage compartment located below officer side "T" of the tank. Compartment sized to store (2) pike poles. | 765 |

| Item No. | Description | |
|---|---|---|
| 3365-0328 | Officer side vertical storage tunnels. For use with low hose bed. Tunnels to hold [#LOC]. The upper ladder tunnel shall be full length of hose bed same width as lower ladder tunnel. The upper ladder tunnel compartment shall be fully enclosed except for an open top/roof which will be open to the elements. Includes vertically hinged rear .1875" smooth plate doors with D-ring latch on each door accessible at the rear of body. | 2407 |
| 3365-0329 | Ladder storage thru tank for (1) 2-section 24' extension (1) 16' roof (1) 10' attic with feet and (2) pike poles. Reduces selected water tank capacity by approximately 250 gallons for pumpers and 300 gallons for tankers. | 3191 |
| 3365-0331 | Recessed folding ladder and pike pole storage compartment located right rear of body up high. Compartment sized to store a 10' ladder with feet and (2) 12' pike poles. | 1151 |
| 3365-0332 | Recessed pike pole storage compartment located left rear of body up high. Compartment sized to store (4) 10' pike poles. | 1021 |
| 3365-0333 | Backboard storage for use with low hose bed stroage tunnel only. Storage for (1) backboard vertically in officer side storage tunnel. Includes stop bracket at the front. | 416 |
| 3365-0334 | Ladder Storage Box. Located in the officer side hosebed. The top shall be enclosed using the hosebed cover the rear access shall be included in the vinyl rear flap as part of the hose bed cover (hinged door not included) The hosebed cover and rear flap shall be sold separately. Box to hold (1) Alcolite PEL 24' 3-section (1) Alcolite PRL 12' roof (1) Alcolite FL 10' attic ladder (2) backboards and (2) pike poles. | 3100 |
| 3365-0335 | Miscellaneous storage in hosebed above the ladder tunnel. Upper area open and main hosebed cover to be used to cover top area of the storage area. There is to be a bolted end plate at the rear of the storage area horizontal adjustable tracks 60" from the rear mounted forward with a divider. | 411 |
| 3365-0337 | Two (2) pike poles and a folding ladder tucked behind ground ladders on the adjustable ladder tracks on the officer's side outside of the hose bed. | 1268 |
| 3365-0338 | Hard Suction Storage Box. Located in the [#LOC] hose bed. Includes vertical hinged door (wired to door ajar) w/push-button latches (without nylatron flooring as preferred by customer). Box to hold (2) 10' hard suction hoses. | 1799 |
| 3365-0339 | Hard Suction Storage Box. Located in the [#LOC] hose bed. Includes vertical hinged smooth plate door (wired to door ajar) w/D-Ring latch(s) and Nylatron flooring. Box to hold (2) 10' hard suction hoses. | 1877 |
| 3365-0340 | Dual hard suction hose storage with stops located (above ladders) in the officer side ladder storage tunnel. Includes a common taller rear access door (wired to door ajar) w/bent D-ring deadbolt type latch. | 1271 |
| 3365-0342 | Dual hard suction hose storage with stops located in the officer side upper header. Includes a lift-up rear access door (wired to door ajar) w/bent D-ring latch. | 2042 |
| 3365-0344 | Hard suction storage box. Located in the officer side hose bed. Includes a swing open diamond plate door vertically hinged on the right hand side (outboard) and wired to door ajar w/push-button latch(es) hose bed style top and nylatron flooring (no divider). Box to hold [#LOC] tubes. | 1799 |
| 3365-0346 | Storage box for (1) 12' length of hard suction hose. Includes vertically hinged door with latch (wired to door ajar indicator). Locate to [#LOC] below "T" of water tank. | 709 |
| 3365-0347 | Recessed folding ladder storage compartment located driver side just below hosebed. Compartment sized to store a 10' ladder with feet. | 756 |
| 3365-0348 | Ladder storage box in driver side of hosebed. Dimensions to be 25" wide x 8" high x length of hosebed. Includes ladder stop 66" back from opening and diamond plate drop down door with a D-ring latch (wired to door ajar indicator) and composite material overlay on hosebed flooring. | 1258 |
| 3365-0349 | Stop bracket to be located approximately 80" back in the lower area of the driver side storage tunnel. | 143 |
| 3365-0350 | Hard suction storage box (pr). Stored (1) each side below "T" of tank. Storage boxes shall be lined with plastic liner and include hinged door with push-button latch. Inside compartment and tube tunnel to be enlarged in depth to fit strainers to be pre-connected as stored. | 1366 |
| 3365-0352 | Portable Tank Storage Box. Located in the officer side hosebed. Includes vertically hinged door (wired to door ajar) w/push-button latches (hinge to the exterior and latch to the interior) hosebed style top and nylatron flooring (no divider). Box to hold [#LOC] gallon aluminum framed Fol-da-tank portable tank. | 1799 |
| 3365-0353 | Double hard suction hose storage tray. Locate inboard side of overhead ladder rack(s) (1) stacked above the other. Includes (2) securing straps per tray. For use with 10' hard suction hoses. | 2543 |
| 3365-0354 | Ladder storage thru tank for (1) 2-section 24' extension (1) 14' roof (1) 10' attic with feet. Ladders shall be stored vertically or on their side (ILO horizontal/flat). (1) 10' Folding ladder and (2) pike poles stacked over and under each other adjacent ladder storage. Tunnel shall be approx centered in rear body. Reduces selected water tank capacity by approximately 300 gallons. | 3537 |
| 3365-0355 | Hard suction Storage Box located in the drivers side roof top compartment. The storage to be boxed off inside roof top compartment. Includes vertical hinged smooth plate door (wired to door ajar) w/push-button latch. Storage to hold [#LOC] 6" x 10' hard suction hoses. | 2310 |

| Item No. | Description | |
|---|---|---|
| 3365-0356 | Ladder storage thru tank for (1) 2-section 24' extension (1) 14' roof (1) 10' attic with feet and (2) pike poles. Provide retaining straps to hold contents stationary. Reduces selected water tank capacity by approximately 250 gallons for pumpers and 300 gallons for tankers. | 3277 |
| 3365-0360 | Driver side vertical storage tunnel behind reduced upper depth left side compartments. Tunnel to hold: up to (3) 10' lengths of 6" hard suction hose. Includes vertically hinged rear smooth plate door with bent D-ring latch. | 2369 |
| 3365-0361 | Zico hydraulic drop down portable tank rack. Rack located to [#LOC] of body. Rack sized for [#COL] gallon aluminum frame portable tank. The control switching to be located driver side rear compartment face with the rack being in full view of the operator during operations. | 6281 |
| 3365-0363 | Hard suction storage rack. Locate:[#LOC]. Includes NFPA retaining strap(s). For use with 15' hard suction hose. | 580 |
| 3365-0364 | Ladder storage box. Located in the officer side hose bed. Includes vertical hinged door (wired to door ajar) w/push-button latch(es) hose bed style top and nylatron flooring (no partition). Box to hold (1) 20' 2-Section and (1) 12' roof. | 1799 |
| 3365-0365 | Officer side vertical storage tunnel. For use with low hosebed fully enclosed and extended to pump area with drain holes forward in tunnel flooring. Tunnel to hold: 2-Section 24' 14' roof 10' attic and (2) pike poles. Includes vertically hinged rear smooth plate door(s) with push-button latch. The pike poles and attic ladder to be stored below the 2-section and roof ladders. Ladder tunnel will not extend to top of the body the area above the ladder tunnel to have hosebed style flooring. | 3807 |
| 3365-0366 | Double Hard Suction Storage Rack. Driver side compartment top. Includes spring hold downs with scuff plates (as applicable). For use with 14' hard suction hoses. | 1490 |
| 3365-0367 | Zico hydraulic drop down portable tank rack. Rack located to [#LOC] of body. Rack sized for [#COL] gallon aluminum frame portable tank. The control switching to be located on the side pump panel with the rack being in full view of the operator during operations. | 6116 |
| 3365-0368 | Zico hydraulic drop down portable tank rack. Rack located to [#LOC] of body. Rack sized for [#COL] gallon aluminum frame portable tank. The control switching to be located officer side rear compartment face with the rack being in full view of the operator during operations. | 6116 |
| 3365-0371 | OBSOLETE: Use 3365-0498. The storage tunnel directly behind the upper area of the officer side compartments shall be fully enclosed as it extendes into the pump module area with drain holes forward in tunnel. | 679 |
| 3365-0373 | (2) D-handle pike pole storage tubes 10' on length. Locate outboard side of ladder rack with pike pole hooks stored in the up position. | 572 |
| 3365-0374 | SCBA/Fire Extinguisher storage rack. Locate in R1 mounted to lower ceiling below compartment offset. To hold (6) bottles to be stored angled upward in the compartment. The bottom and sides are to include ribbed rubber inserts. Each storage slot to be 9.25" wide x 11" high. | 2984 |
| 3365-0375 | Hard suction storage box. Located in the driver side hose bed. Includes a swing open diamond plate door vertical hinged on the right hand side (inboard) and wired to door ajar w/"D"-ring latch(es) hose bed style top and nylatron flooring (no divider). Box to hold [#LOC] tubes. | 1799 |
| 3365-0377 | Fire extinguisher storage rack to hold (3) extinguishers in a single horz row. The rack shall be raised 3" on the open end to allow the extinguishers to slide back into the box at an angle. Bottom and sides to include ribbed rubber inserts. Each opening to have a vertically mounted strap. The rearward opening shall be 15" wide the middle and forward opening to be 10" wide. The opening shall be 18" high. The top shall be flat and have a 2" lip up for storing items as a permanent shelf. Locate floor mtd in [#LOC]. | 753 |
| 3365-0378 | Ladder Storage Box. Located in the officer side hosebed. The top shall be enclosed using hosebed style top. Includes drop down door (wired to door ajar) W/ D-ring latch. Box to hold (1) Alcolite FEL 24' 2-section (1) Alcolite FRL 14' roof (1) Alcolite FL 10' attic ladder and (5) 10' pike poles (NY hooks). | 3100 |
| 3365-0379 | Fire extinguisher storage rack to hold (3) extinguishers in a single horz row. Bottom and sides to include ribbed rubber inserts. Each opening to have a vertically mounted strap. The top shall have a 1" lip up for storing items.Locate floor mtd in [#LOC]. | 753 |
| 3365-0380 | Zico pike pole mounting brackets (PR). Locate outboard on top of Zico drop-down ladder rack. | 189 |
| 3365-0382 | Hose bed storage compartment for Low Hosebed body. Contents stored as follows from left to right: (1) Model 17 Little Giant ladder extended (2) pike poles (6' with drywall hook 10' with dry wall hook)above the Little Giant ladder (1) 10' folding ladder above the Little Giant ladder (2) 6" x 10" hard sution hoses. | 2756 |
| 3365-0383 | Officer side vertical storage tunnel behind reduced upper depth right side compartments. Tunnel to hold: 24' 2-section and 14' roof plus (2) pike poles and a folding ladder. Does not include a door. | 1992 |
| 3365-0384 | Single hard suction hose storage with stop located (above ladders) in the officer side ladder storage tunnel. Includes a common taller rear access door (wired to door ajar) w/bent D-ring deadbolt type latch. | 1271 |
| 3365-0387 | Hard Suction Hose Rack for 2.5" or 3" Hose located inboard on hydraulic ladder rack (Each) | 274 |

| Item No. | Description | |
|---|---|---|
| 3365-0389 | Hard suction hose storage tray. Locate on top of Zico drop-down ladder rack. Mount secure straps further outboard to accommodate longer hard tube or 10' hard suction tube with a Kochek BS60 Barrel strainer pre-attached. | 933 |
| 3365-0390 | Ladder storage box. Located in the driver side hose bed. Includes vertically hinged door (wired to door ajar) w/push-button latch(es) hose bed style top and nylatron flooring (no partition). Box to hold (1) 22' 3-Section (1) 10' roof and (1) 8' folding ladder | 1799 |
| 3365-0392 | Storage Tunnel. A storage tunnel shall be provided constructed of break formed .125" aluminum sheet located behind the officer upper compartments. Includes a hinged rear access door (wired to door ajar) with a 2-point bent D-ring latch. | 2683 |
| 3365-0395 | Fire Extinguisher storage rack. Locate in B1 mounted to ceiling and/or compartment walls as applicable to drop down and exit just below the roll up door when opened. To hold (3) bottles- (3)wide/(1)high. Each box to be 11" high x 11" wide. The bottom and sides are to include ribbed rubber inserts. The storage box shall have a drop down door with a latch to secure the cylinders in place during transit. | 475 |
| 3365-0397 | Officer side vertical storage tunnels. For use with low hose bed. Tunnels to hold: [#LOC]. The upper ladder tunnel shall be full length of hose bed same width as lower ladder tunnel. The upper ladder tunnel compartment shall be fully enclosed except for an open top/roof which will be open to the elements. | 2638 |
| 3365-0398 | Hard suction storage box (pr). Stored (1) each side below "T" of tank. Includes hinged door with push-button latch. Tube tunnels to extend through raised rear enhanced extended compartment steps to gain additional capacity for longer length tube storage. Tube tunnels to fit One (1) 6" X 12' Hard suction tube on each side. | 1445 |
| 3365-0400 | Officer side vertical storage tunnels. For use with low hose bed. Tunnels to hold: [#LOC]. The upper tunnel to have enclosed storage for (2) 10' X 6" hard suction hoses (stacked) with (2) pike poles with multipurpose hooks (recessed 5" fwd of door). The upper area above and forward of the fully enclosed hard suction / pike pole storage to be open top/roof which will be open to the elements includes drain hole(s) as required. Includes vertically hinged rear .1875" smooth plate doors with D-ring latch on each door accessible at the rear of body. | 3513 |
| 3365-0401 | Officer side vertical storage tunnel behind reduced upper depth right side compartments. Tunnel to hold: 24' 2-section and 16' roof plus a folding ladder. Includes vertically hinged rear smooth plate door with bent D-ring latch. | 2090 |
| 3365-0403 | Zico model HLAS-HS-2KIT Double hard suction hose storage tray. Locate on inboard side of overhead ladder rack. Includes (2) securing straps per tray. | 915 |
| 3365-0404 | Hosebed storage box. Located in the center of the hosebed. To hold (1) backboard (1) 10' pike poles(1) 8' pike pole (1) 6' NY style pike pole (1) 6' pike pole and (1) 10' attic ladder with access from a vertically hinged diamond plate door (wired to door ajar) with a push-button latch. | 2043 |
| 3365-0405 | Hose tray storage with stop located (above ladders) in the officer side ladder storage tunnel. Includes a common taller rear access door (wired to door ajar) w/bent D-ring deadbolt type latch. | 1271 |
| 3365-0408 | Hard Suction Storage Box. Located in the officer side hosebed. Includes vertical hinged door (wired to door ajar) w/push-button latches and nylatron flooring. Box to hold one (1) 6" X 10' hard suction hose. | 900 |
| 3365-0409 | Ladder storage box. Located in the officer side hose bed. Includes vertically hinged diamond plate door (wired to door ajar) w/push-button latch open top and nylatron flooring (no partition). Box to hold (1) 20' 2-Section and (1) 12' roof (1) 10 foot attic ladder with feet. and (2) 10' pike pole tubes. | 2165 |
| 3365-0410 | Ladder Storage Box. Located in the officer side hosebed. The top shall be enclosed using the hosebed cover the rear access shall be equipped with an outboard vertical hinged door with thumb latch and moon spring hold open The hosebed cover and rear flap shall be sold separately. Box to hold (1) Alcolite PEL 24' 3-section (1) Alcolite PRL 12' roof with separete divider and (1) Model 13 Little Giant | 3100 |
| 3365-0411 | Driver side ladder storage tunnel. Includes area for a vertically stored 24' 2-section'and 14' roof. Includes vertically hinged rear smooth plate door with push-button latch. | 1308 |
| 3365-0414 | Backboard stop bracket to be located approximately 80" back in officer side of ladder tunnel. | 264 |
| 3365-0416 | Hosebed ladder storage box with diamond plate top. Located centered in hosebed and to secure from driver to officer: (3) 2.5" x 10' hard suction tubes (2) 10' pike pole tubes mounted down low (1) 925-A 22' 3 Sect & (1) 775-A 10' Roof. Ladders to be stored on beam. Included are (2) hosebed dividers with squared ends diamond plate top and a vertically hinged diamond plate door (hinged to officer side) wired to the door ajar indicator. | 1496 |
| 3365-0417 | Zico attic ladder mounting brackets (PR). Locate [#LOC]. | 251 |
| 3365-0420 | Dual hard suction hose storage with stops located in the drivers side upper header. Includes a lift-up rear access door (wired to door ajar) w/bent D-ring latch. | 2042 |
| 3365-0422 | Ladder storage through tank for (1) 2-section 24' extension (1) 14' roof (1) 10' attic with feet(2) pike poles and (2) backboards. Reduces selected water tank capacity by approximately 350 gallons. | 3710 |

| Item No. | Description | |
|---|---|---|
| 3365-0423 | Recessed folding ladder storage compartment located [#LOC]. Compartment sized to store a 10' ladder with feet. | 633 |
| 3365-0425 | Officer side vertical storage tunnel. For use with low hose bed. Tunnel to hold: 2-section 24' 14' roof 10' attic (2) pike poles (2) NY Hooks (1) piercing nozzle area for fire brooms and area for shovels. Includes vertically hinged rear brushed stainless steel door(s) with push-button latch. | 2842 |
| 3365-0426 | (3) Hard Suction Storage Racks. Driver side hosebed side with adjustable tracks. Includes spring hold downs and scuff plates behind spring mounts (as applicable). | 1158 |
| 3365-0427 | Hard suction storage box. Located on the driver side compartment top. Includes vertical hinged door at the rearward of the apparatus as installed that swings outward (wired to door ajar) w/push-button latch To be constructed of .125" thick aluminum tread plate with nylatron flooring. Box to hold one (1) 6 inch dia. x 10 foot hard tube. | 1554 |
| 3365-0428 | Hard suction storage box. Located on the officer side compartment top. Includes vertical hinged door at the rearward of the apparatus as installed that swings outward (wired to door ajar) w/push-button latch To be constructed of .125" thick aluminum tread plate with nylatron flooring. Box to hold one (1) 6 inch dia. x 10 foot hard tube. | 1554 |
| 3365-0429 | Hard suction Storage Box located in the driver side roof top compartment. The storage to be boxed off inside roof top compartment. Includes vertical hinged smooth plate door (wired to door ajar) w/push-button latch. Storage to hold (2) 6" X 12' hard suction tubes. | 2310 |
| 3365-0430 | Extra wide folding ladder/rake pole box and (2) additional pike poles (total of 4) stored outboard of 2-section ladder located in Officer Side Tunnel. Compartment sized to store a 10' ladder with feet with 72" long are for rake pole and (2) additional pike poles. | 717 |
| 3365-0431 | Hard suction storage box. Located in the officer side hose bed. Includes vertically hinged diamond plate door (wired to door ajar) with D-Ring latch hose bed style top and nylatron flooring (no divider). Box to hold 3 tube(s). | 1799 |
| 3365-0434 | Ladder Storage Box. Located in the officer side hosebed. The top shall be enclosed using the hosebed cover the rear access shall be equipped with an INBOARD vertical hinged door with thumb latch and moon spring hold open The hosebed cover and rear flap shall be Sold Separately. Rear Flap does not cover rear ladder box door. Box to hold (1) Alcolite PEL 24' 3-section (1) Alcolite PRL 12' roof with separete divider (1) Model 13 Little Giant (1) 6` Firehook model MPH-6 pike pole w/gas shut-off end and (1) 8` Firehook model MPH-8 pike pole w/gas shut-off end. | 3464 |
| 3365-0435 | Nylon black strap with clip release for use with Drv/Ofc side storage tunnel. | 101 |
| 3365-0436 | Ladder storage box. Located in the officer side hose bed. Includes vertically hinged door (wired to door ajar) w/push-button latch(es) and nylatron flooring (no partition). Box to hold (1) 20' 2-Section and (1) 12' roof. | 1799 |
| 3365-0437 | Officer side vertical storage tunnel. For use with low hose bed. Tunnel to hold: [#LOC]. Includes vertically hinged rear diamond plate door(s) with D-ring latch. | 2319 |
| 3365-0438 | Storage tunnel above B1 capable of holding: (1) Ferno Washington Model 71 stokes basket. Install (1) divider 26" off driver side wall full length with nylatron on floor and stop set at 90". Right side remaining area will have a stop set at 72". | 1136 |
| 3365-0439 | Recessed folding ladder and pike pole storage compartment located right rear of body up high. Compartment sized to store a 10' ladder with feet and (3) 10' pike poles. The pike poles shall be (1) mounted from the top and (2) at the bottom of the box. | 1400 |
| 3365-0440 | Zico HHS-TM-1 hard suction storage rack. Locate on the Zico Hydraulic Portable Tank System. Includes NFPA retaining strap(s). | 501 |
| 3365-0441 | Zico model HLAS-HS-1KIT Single hard suction hose storage tray. Locate on inboard side of overhead ladder rack. Includes (2) securing straps. | 576 |
| 3365-0442 | Officer side vertical storage tunnel. For use with low hosebed. Tunnel to hold: 2-Section 24' 14' roof 10' attic(2) pike poles and (1) backboard. Includes vertically hinged rear diamond plate door(s) with push-button latch. Includes upper area of ladder tunnel to have (2) roof top compartments. Includes hinged raised compartment lids with turn latches. Each lid to have (1) bracket mounted light and to be wired to door ajar indicator in cab. | 3924 |
| 3365-0443 | Hard suction storage rack for (1) 6" X 8' suction hose. Locate [#LOC]. Includes NFPA retaining strap(s). | 321 |
| 3365-0445 | Single hard suction hose storage without stop located (above ladders) in the officer side ladder storage tunnel. Includes a common taller rear access door (wired to door ajar) w/bent D-ring deadbolt type latch. Used for extra long suction hose (up to 14'). | 1219 |
| 3365-0446 | Single hard suction hose storage (without stops) located in the drivers side upper header. This allows for longer suction hose. Includes a lift-up rear access door (wired to door ajar) w/bent D-ring latch. | 1679 |
| 3365-0447 | Recessed folding ladder and pike pole storage compartment located officer side just below "T" of the tank. Compartment sized to store a 10' ladder with feet and (2) pike poles. To have a hinged smoothplate door with a thumb latch hinged to open downward tied to door ajar and park brake per NFPA. | 993 |
| 3365-0451 | (2) 10' pike pole storage tubes. Locate driver side in adjustable tracks with pike pole hooks stored in the up position. Outboard tube to be fitted for a NY hook. | 498 |

| Item No. | Description | |
|---|---|---|
| 3365-0454 | Stokes/backboard storage with stops located in the officers side upper header. Includes a lift-up rear access door (wired to door ajar) w/bent D-ring latch. | 1893 |
| 3365-0455 | Dual hard suction hose storage (without stops) located in the officer side upper header. This allows for longer suction hoses (maximum lenght of 12'). Includes a lift-up rear access door (wired to door ajar) w/bent D-ring latch. | 2081 |
| 3365-0456 | Storage box on officer side compartment top with an open top access and seatbelt style straps with the buckle end mounted to the top of box. Box will be designed per customer specific requirements. | 2136 |
| 3365-0457 | Four (4) pike poles and a folding ladder tucked behind ground ladders on the adjustable ladder tracks. | 2998 |
| 3365-0459 | Box storage rack. Locate in [#LOC]. (2) wide/(2) high. Each compartment to be 8" wide x 10" high. Box to be angled upward in the compartment. No ribbed rubber. | 385 |
| 3365-0460 | Box storage rack. Locate in [#LOC]. (1) wide/(2) high. Each compartment to be 12" wide x 10" high. Box to be angled upward in the compartment. No ribbed rubber. | 333 |
| 3365-0461 | Ladder storage box. Located in the officer side hose bed. Includes vertically hinged door (wired to door ajar) w/push-button latch(es) hose bed style above the ladder storage and nylatron flooring (no partition). Box to hold (1) 24' 2-Section (1) 14' roof (1) 10' attic and (2) pike poles. | 2942 |
| 3365-0465 | Officer side vertical storage tunnels. For use with low hose bed. Lower Tunnel to hold: 2-section 24` 14` roof 10` attic and (3) pike poles (1) standard (2) with multipurpose hooks (recessed 5" fwd of door). The upper tunnel to have enclosed storage for (1) 10` X 6" hard suction hose with (1) pike pole with multipurpose hook (recessed 5" fwd of door). The area below the hard suction storage for a removable hose tray (not included) for customers "high raise packs" with a stop set at 72" from access opening. Includes vertically hinged rear .188" smooth plate doors with D-ring latch on each door accessible at the rear of body. | 3513 |
| 3365-0466 | One (1) pike pole and one (1) multipurpose hook and a folding ladder tucked behind ground ladders on the adjustable ladder tracks on the officer's side outside of the hose bed. | 1268 |
| 3365-0467 | Hard suction storage in hosebed for the following: (3) 6" x 10' hard suction hoses. Includes (2) hosebed divider with squared off upper rear vertically hinged (to swing outboard hosebed area) door with latch (wired to door ajar indicator) and composite material overlay on hosebed flooring. Upper area open and main hosebed cover to be used to cover top area of storage area. Storage located in the center of the hosebed. | 1819 |
| 3365-0468 | Internal ladder tunnel storage with vertically hinged smooth plate door (wired to door ajar). Access door to be located to the rear of the officer's side body. Storage tunnel capable of holding: (2) 12' Roof (1) 10' Attic (1) 6' roof hook pole (1) 8' pike pole and (1) 10' pike pole. | 3069 |
| 3365-0469 | Ladder storage through tank for (1) 2-section 24' extension (1) 14' roof (1) 10' attic with feet (2) pike poles and (2) 10' X 6" hard suction hoses. Reduces selected water tank capacity by approximately 450 gallons for pumpers. | 6197 |
| 3365-0470 | Hard suction Storage Box located in the officer side roof top compartment. The storage to be boxed off inside roof top compartment. Includes vertical hinged smooth plate door painted job color as applicable (wired to door ajar) w/D-ring latch. Storage to hold (2) 6" X 10' hard suction tubes horizontal side by side.. | 2310 |
| 3365-0471 | Upper hosebed storage area above ladder or storage tunnel on officer side body. Upper storage area to have an open top and run length of the hosebed area. Includes hosebed style flooring and matching rear vinyl or cargo net cover of same style/color as main hosebed. | 1103 |
| 3365-0472 | Recessed folding ladder and pike pole storage compartment located right rear of body up high. Compartment sized to store a 10' ladder with feet and (3) up to 12' in length pike poles. | 1516 |
| 3365-0473 | Upper hosebed storage area above driver side compartments. Upper storage area to have an open top and run length of the available hosebed area as optioned. Includes hosebed style flooring. | 1104 |
| 3365-0474 | Officer side vertical storage tunnel. For use with low hosebed fully enclosed and extended to pump area with drain holes forward in tunnel flooring. Tunnel to hold: 2-Section 24' 14' roof 10' attic and (2) D-Handle pike poles. Includes vertically hinged rear smooth plate door(s) with push-button latch. The attic ladder to be stored below the 2-section and roof ladders. The D-Handle pike poles to be located on the hose bed wall outboard of ground ladders. Ladder tunnel will not extend to top of the body the area above the ladder tunnel to have hosebed style flooring. | 3807 |
| 3365-0475 | Hard suction storage box vertical over/under. Located in the officer's side hose bed. Includes a swing open door vertical hinged on left side (wired to door ajar) w/trigger latch hose bed style top and flooring. Box to hold (2) 6" x 10' long tubes. | 1799 |
| 3365-0476 | Ladder Storage Box. Located in the officer side hosebed. The top shall be enclosed using hosebed style top. Includes vert hinged door (wired to door ajar) w/ thumb latch(s). Box to hold (1) one 24' 2-section (1) one 14' roof (1) one 10' folding attic ladder (4) four pike poles and (2) two 6" x 10' hard suction hose above ladders. | 3446 |
| 3365-0477 | Hard suction storage box vertical over/under. Located in the driver's side hose bed. Includes a swing open door vertical hinged on right side (wired to door ajar) w/trigger latch hose bed style top and flooring. Box to hold (2) 6" x 10' long tubes (not included). | 1799 |

| Item No. | Description | |
|---|---|---|
| 3365-0478 | Hard suction storage box with strainer storing capacity. Located in the driver side hose bed. Includes a swing open diamond plate door vertically hinged on the right hand side (inboard) and wired to door ajar w/thumb latch(es) diamond plate top and nylatron flooring (no divider). Box to hold [#LOC] tubes with strainer. | 1799 |
| 3365-0479 | Hardsuction Storage in hosebed for the following: (2) 6" x 10' Hoses. Includes (1) hosebed divider with squared off upper rear vertically hinged (to swing into hosebed area) door with latch (wired to door ajar indicator) and composite material overlay on hosebed flooring. Upper area open and main hosebed cover to be used to cover top area of hardsuction storage area. Storage located to officer of hosebed. | 1258 |
| 3365-0480 | Hard suction storage in hosebed for the following: (2) 6" x 10' hard suction hoses. Includes (1) hosebed divider with squared off upper rear vertically hinged (to swing outboard hosebed area) door with latch (wired to door ajar indicator) and composite material overlay on hosebed flooring. Upper area open and main hosebed cover to be used to cover top area of storage area. Storage located to officer side of hosebed. | 1258 |
| 3365-0481 | Zico hydraulic drop down portable tank rack. Rack located to officer of body. Rack sized to be a portable tank 169" long. The control switching to be located officer side rear compartment face with the rack being in full view of the operator during operations. | 6679 |
| 3365-0482 | The driver side Storage Box to store (2) backboards. Each to be accessed by a vertically hinged diamond plate door with a push-button latch. Door to wired to the door ajar indicator in the cab. | 579 |
| 3365-0483 | Officer side vertical storage tunnel. For use with low hosebed. Tunnel to hold: 2-Section 24' 14' roof 10' folding attic (2) pike poles and (1) backboard. Includes vertically hinged rear smooth plate door (to accommodate graphics/striping) with push-button latch. Upper storage area to have an open top and run full length of the body. Upper area to have hosebed style flooring. | 3471 |
| 3365-0484 | Recessed folding ladder and pike pole storage compartment located left rear of body up high. Compartment sized to store a 10' ladder with feet and (2) 12' pike poles. | 1151 |
| 3365-0487 | A bolt on aluminum fabricated sign plate mounted to the exterior vertical surface of the hydraulic ladder lift structure. This shall provide a mounting surface for lights along with an area for graphics. Sign plate shall be painted job color to match the ladder lift. | 859 |
| 3365-0489 | Trash Hook storage compartment located driver side just below hosebed. Compartment sized to store a 10' Trash Hook with D-Handle with smooth plate vertically hinged door and D-Ring latch. | 756 |
| 3365-0492 | Storage box on officer side compartment top with 2 half length side hinged down access doors with 2 butterfly latches per door (wired to door ajar). Box to be approximately 149" long x 12" high x 12" deep without center divider. Storage is for 2.5" DJ hose with nozzle for hi-rise pack remaining extra space for tool storage. With black dri-deck flooring. | 1531 |
| 3365-0493 | (2) 10' pike pole storage tubes. Locate inboard bottom side of ladder rack on old style adjustable track with pike pole hooks stored in the down position. | 678 |
| 3365-0495 | Storage tunnel capable of holding: (1) Husky brand steel frame 2100 gallon folding tank. Tunnel to be 35" tall by standard width and full length of the available body. Forward end of tunnel to be capped with a removable plate to seal tunnel from debris and a 10.5" wide (minimum or as applicable to tank model) U channel top and bottom centered in tunnel with Nylon pads to be supplied on the bottom. Door to be plate aluminum matching ladder tunnel with push button latch tied to door ajar. Tank storage to be Driver Side Storage Tunnel. | 1779 |
| 3365-0498 | Storage Tunnel to be completely enclosed to prevent road grime and dust from entering into the storage tunnel. Drain holes shall be provided as applicable for water drainage. | 521 |
| 3365-0501 | Dual hard suction hose storage with stops located in the officer side upper header. Designed to hold (1) 11' and (1) 7' hoses (not included). | 2042 |
| 3365-0502 | Four (4) pike poles and a folding ladder located under stokes basket module on floor of upper left side body compartment. | 1268 |
| 3365-0503 | Recessed pike pole storage compartment located [#LOC]. Compartment sized to store (2) pike poles. | 512 |
| 3365-0504 | Three (3) pike poles and a folding ladder tucked behind ground ladders on the adjustable ladder tracks. | 2998 |
| 3365-0505 | Hard Suction Storage Box. Located horizontal in the drivers side hosebed. Includes vertical hinged door (wired to door ajar) with D-Ring style latches and nylatron flooring. Box to hold two (2) 6" X 10' hard suction hose. | 1799 |
| 3365-0506 | Hard suction storage box. Located in the officer side hose bed. Includes a swing open door vertical hinged on the right hand side (outboard) and wired to door ajar w/push-button latch(es) hose bed style top and nylatron flooring (no divider). Box to hold two (2) tubes. | 1799 |
| 3365-0507 | Horizontal stokes basket bracket installed on driver side of hosebed cover for Washington Ferno model 71 stokes basket. Will include aluminum boot and stokes hold down fasteners. | 571 |
| 3365-0508 | Ladder storage thru tank for (1) 2-section 24' extension (1) 14' roof (1) 10' attic with feet(2) 10' pike poles and (1) Combo step-extension (Duo Safety 300-A) ladder. Ladders shall be stored horizontally. Ladder storage is approximately 270 gallons. | 3755 |

| Item No. | Description | |
|---|---|---|
| 3365-0510 | (2) aluminum pike pole storage tubes. (2) 48" pike pole tubes to be Located just below rearward and across lower B1 compartment top and to extend into L4 and R3 compartments for dealer supplied and installed trash hooks. Dealer is to supply and install required retaining devise for hooks. | 364 |
| 3365-0512 | Hard suction storage box. Located in the driver side hose bed. Includes a swing open diamond plate door vertical hinged on the right hand side (inboard) and wired to door ajar w/push button latch(es) and nylatron flooring. Box to hold one (1) 6" X 10' tube. | 1277 |
| 3365-0513 | Hard suction storage box. Located in the officer side hose bed. Includes a swing open diamond plate door vertical hinged on the left hand side (inboard) and wired to door ajar w/push button latch(es) and nylatron flooring. Box to hold one (1) 6" X 10' tube. | 1277 |
| 3365-0514 | Fire extinguisher storage rack to hold (3) extinguishers in a single horz row. Each storage area to be 11" wide x 11" high x 25" deep with a trough in the bottom (same as used in E-ONE wheelwell bottle storage. Bottom and sides of the trough to include ribbed rubber inserts. Each opening to have a vertically mounted strap. Bolt to the bottom of the adjustable shelf in R1 forward end. | 753 |
| 3365-0515 | Full width horizontal storage tunnel between top of tank and below hose bed floor. Tunnel to hold: (3) 10' lengths of 6" hard suction hose side by side on the right side. Includes horizontally hinged drop down rear smooth plate door with bent D-ring latch and bolt-on SS partition protection for water tank fill tower(s). | 3183 |
| 3365-0517 | Recessed pike pole storage compartment located on the officer side between the upper and lower compartments. Compartment sized to store (1) 6' NY Roof Hook and (1) 6' Drywall Hook. The box to be 5" deep. | 512 |
| 3365-0518 | Fire Extinguisher storage rack. Locate in R2 offset forward. To hold (4) bottles- (2) wide/(2)high. Bottles to be stored angled upward in the compartment. The bottom and sides are to include ribbed rubber inserts. Each storage slot to be 11" wide x 10" high. | 1004 |
| 3365-0519 | Upper hosebed storage area above driver side compartments. Upper storage area to have an open top and run length of the available hosebed area as optioned. Includes slotted flooring for storage of 17' Little Giant Ladder with divider set 8.5" leaving 4.25" outboard for customer supplied and installed backboards. Dealer to supply stops for backboards. | 1526 |
| 3365-0521 | Officer side ladder storage tunnel. Includes area for a vertically stored 35' 3-section' 16' roof and 10' folding ladders plus storage for two (2) standard pike poles. | 1849 |
| 3365-0522 | Ladder storage box in driver side of hosebed. Dimensions to be 25" wide x 9" high x length of hosebed. Includes ladder stop 66" back from opening and diamond plate drop down door 8" high (1" open space between top of door and top of box) with a D-ring latch (wired to door ajar indicator) and composite material overlay on hosebed flooring. | 1415 |
| 3365-0523 | Recessed folding ladder and pike pole storage compartment located right rear of body up high. Compartment sized to store a 10' ladder with feet (3) 10' pike poles and (1) 8' "D" handle trash hook. | 2170 |
| 3365-0524 | Hard suction storage box. Located in the driver side hose bed. No door. Box to hold one (1) 6" X 10' tube below and a slotted smooth plate floor for hose storage above. | 900 |
| 3365-0525 | Recessed folding ladder and pike pole storage compartment located right rear of body. Compartment sized to store a 10' ladder with feet and (3) pike poles. The pike poles shall be (1) 6' (1)8' and (1) 10'. Content lables to be located on access door. | 1400 |
| 3365-0526 | Storage box located in the officer side ladder tunnel above the attic ladder storage box. To be constructed of .125" aluminum smooth plate x 5" wide x 6" high x 82" long similar to the attic ladder box. Closed end at front. | 359 |
| 3365-0535 | Hard suction storage box. Located in the driver side hose bed. Includes a swing open smooth plate door painted job color vertical hinged on the right hand side (inboard) and wired to door ajar w/"D"-ring latch(es) hose bed style top and nylatron flooring (no divider). Box to hold [#LOC] tubes. | 1799 |
| 3365-0536 | Hard suction storage box. Located in the officer side hose bed. Includes a swing open diamond plate door vertically hinged on the right hand side (outboard) and wired to door ajar w/"D" ring latch(es) hose bed style top and nylatron flooring (no divider). Box to hold [#LOC] tubes. | 1799 |
| 3365-0537 | Internal aluminum frame portable tank storage with vertically hinged diamond plate door (wired to door ajar) with a D-ring latch. Access door to be located to the rear of the Driver's side of body. Included is a composite material floor overlay and a tank stop for use with a 2100 gallon aluminum frame portable storage tank. | 833 |
| 3365-0538 | Ladder storage in hosebed for the following: (1) 20' 2-section extension and (1) 12' roof laddersr (1) 10' folding attic (2) standard 10' pike pole storage tubes and (2) two 4" hard suction hose with small style coupling (10' LENGTH UNLESS NOTED OTHERWISE IN RELEASED ORDER). Extension and roof ladders stored nested above other items in storage box. Includes (1) hosebed divider style side support with squared off upper rear vertically hinged (to swing into hosebed area) door with latch (wired to door ajar indicator) and composite material overlay on hosebed flooring and below ground ladders. Upper area open and main hosebed cover to be used to cover top area of ladder storage area. Storage located to officer's side of hosebed. | 1427 |

| Item No. | Description | |
|---|---|---|
| 3365-0539 | Hard suction storage rack. Locate on the Officer's side adjustable ladder tracks (above ladder brackets if applicable). Includes spring hold downs with scuff plates (as applicable). For use with 15' hard suction hose. | 580 |
| 3365-0543 | Hard suction storage box. Located in the driver side hose bed. Includes a swing open door vertical hinged on the right hand side (inboard) and wired to door ajar w/push-button latch(es) hose bed style top and nylatron flooring (no divider). Box to hold [#LOC] tubes. | 1799 |
| 3365-0544 | Hosebed Storage Box. Located in the officer side hosebed. Includes drop down door (wired to door ajar) w/push-button latch(es) hosebed style top and nylatron flooring (no divider). Box to hold (1) stokes basket. Includes stop bracket approximately 88" back from opening. Stokes basket 86" long x 24" wide x 8" high. | 2042 |
| 3365-0545 | Double hard suction hose storage tray. Locate inboard side of overhead ladder rack(s) (1) stacked above the other. Includes (2) securing straps per tray. For use with 10' hard suction hoses. | 1871 |
| 3365-0546 | 2-Arm Ladder Rack to be painted Sikkens FLNA 4145 Black. | 3348 |
| 3365-0547 | (2) pairs of pike pole mounting brackets. Locate inboard side of rack for use with customer/dealer supplied pike poles. Brackets to be located so they retain both a standard pike and a D-handle model. Brackets to be P.A.C. TOOLOK. | 399 |
| 3365-0548 | Backboard storage located in upper storage compartment under hose bed to the left of the supplied center divider. A vertical partition is to be located across the front of storage 84 inches deep x available height at door opening approx. 10 inches x available width of 20 inches to center divider. Space to be utilized for storage of backboards. Remaining area to the right of the center supplied divider to have a vertical partition located across the front of storage 100 inches deep and to contain a storage box for a 8' "D"-handle trash hook along with two (2) pike pole tubes for two (2) 8' pike poles with NY hooks. | 1432 |
| 3365-0549 | One (1) pike pole and two (2) multipurpose hooks and a folding ladder tucked behind ground ladders on the adjustable ladder tracks on the officer's side outside of the hose bed. | 1268 |
| 3365-0550 | Backboard Storage Box. Located in the officer side hose bed. Includes vertically hinged door (wired to door ajar) w/push-button latch. Box to hold (1) backboard. | 799 |
| 3365-0551 | Triple Hard Suction Storage Rack for 10' hard suction hoses. Driver upper body side. For use with custom style hose hold downs. | 884 |
| 3365-0552 | 2-Arm Ladder Rack to be painted Sikkens FLNA 9550 Dark Grey Metallic. | 3565 |
| 3365-0553 | Hard suction hose storage tray. Locate on top of Zico drop-down ladder rack. Mount secure straps further outboard to accommodate longer hard suction hose up to 13' in length. | 933 |
| 3365-0554 | Pre-connect removable horizontal U formed divider to be mounted to adjustable aluminum angles attached to Driver side hose bed wall and first and second full length divider in hose bed. Divider(s) to be fabricated from formed .25in thick smooth plate aluminum with DA finish with drainage slots to allow for water shed. Sides of formed divider shall be formed with a bend upwards 2in. to increase rigidity of the divider for hose weight. Each formed divider to be equipped with a Pin (s) with lanyard through side mounting angles to prevent movement of divider in transit. Divider trays when emptied of stored hose shall have a hand hold relief cut in each divider formed pan for ease of removal once unloaded. Side angles shall be located on the divider (s) and side wall of hose bed as applicable to position the divider approximately 21 in. above the hose bed level. This to allow for 2 vertical stacked hose storage areas to accommodate hose lays below at bed level and additional above | 2142 |
| 3365-0555 | Officer side vertical storage tunnel. For use with low hose bed. Tunnel to hold: 2-Section 24ft 14ft roof 10ft attic (1) back board and (4) pike poles. Includes vertical hinged rear smooth plate door matching rear body finish with push-button latch. Upper storage area to have an open top and run full length of the body. Upper area to have hose bed style flooring. | 3579 |
| 3365-0559 | Zico pike pole mounting brackets (PR). Locate inside forward transverse area in E-MAX module forward of stokes basket storage. May limit/omit back board storage at this location. To store short 6ft poles in upper module transverse. ZICO parts PPMB-AA and PPMB-BB. These are the brackets only and will not include any tubes or pike poles. | 189 |
| 3365-0560 | Storage box located [#LOC]. Content of the storage to be vertically stacked and include a vertically hinged door w/D-Ring style latch (thumb latch if space is restricted). The box is to be the full length of the available hose bed and include stop(s) as needed for storage content. | 1799 |
| 3365-0561 | Pike pole tubes. Provide (2) tubes to accommodate Fire Hooks Unlimited New York Hook Model RH-6 pike pole storage. Locate: Pump module upper transverse area on driver side. | 777 |
| 3365-0562 | Pike pole tubes. Provide (2) tubes to accommodate Fire Hooks Unlimited New York Hook Model RH-6 pike pole storage. Locate: Pump module upper transverse area on officer side. | 777 |
| 3365-0564 | Hard Suction Storage Rack Double side by side 2.5" or 3.0" hard tubes. Drivers side in adjustable track above ladders and or other track mounted options (if applicable). Includes NFPA retaining strap(s). To hold (2) 2.5" or 3.0" x 10' long hard tubes on a side by side double tray. | 840 |

| Item No. | Description | |
|---|---|---|
| 3365-0565 | Hard suction storage box smooth plate side wall construction painted job color. Located on the [#LOC]. Includes vertically hinged door(s) (wired to door ajar) w/D-Ring latch(s). Compartments are to extend to the back side of the L2 compartment and to be approximately the same height as L1 L2 compartments. Lower two (2) box compartments to have stops to accommodate 10' suction hose. Third compartment to have stops to accommodate 10' pike pole with D style handles. Uppermost compartment to have stops to accommodate 6' pike poles with D style handles. | 1799 |
| 3365-0568 | The storage box located [#LOC] to have hosebed style top. | 192 |
| 3365-0571 | Ladder storage through tank for (1) 2-section 28' extension (1) 16' roof (1) 10' attic with feet and (2) pike poles. Reduces selected water tank capacity by approximately 300 gallons for pumpers and 350 gallons for tankers. | 3191 |
| 3365-0572 | Officer side Combination tunnel upper compartment Contents: (2) 6" x 10' hard suction hoses (not included) stored vertical. Includes necessary plate work and bolt in removable floors between tubes as stored with end stops to prevent the tube from sliding forward into body during transit. Includes Nylatron or similar flooring material to ease deployment of hoses. | 1100 |
| 3365-0573 | Recessed folding ladder and pike pole storage compartment located at rear of apparatus officer side under "T" of tank. Compartment sized to store a 10' ladder with feet and (3) pike poles positioned with tubes on center for double side headed pike poles NY style or similar. | 1048 |
| 3365-0575 | Portable storage tank in hosebed for the following: 2100 gallon aluminum frame tank. Includes (2) hosebed divider with squared off upper rear vertically hinged (to swing into hosebed area) door with latch (wired to door ajar indicator) and composite material overlay on hosebed flooring. Upper area open and main hosebed cover to be used to cover top area of storage area. Storage located 5" from the officer side hosebed side. | 1819 |
| 3365-0577 | Left hosebed horizontal tunnel. For use with low hose bed. Tunnel to hold: 24' 2-Section 14' roof ladder and 10' attic. Includes horizontal top hinged rear diamond plate door(s) with bent D-ring latch. Open storage space on left side for additional long handle tool storage. | 2263 |
| 3365-0578 | Ladder storage thru tank for (1) 2-section (1) 14' roof (1) 10' attic with feet and (2) pike poles. Includes horizontally hinged lift up door with Bent D-Ring latch (wired to door ajar indicator). Reduces selected water tank capacity by approximately 250 gallons. | 3277 |
| 3365-0580 | Driver side vertical storage tunnel behind reduced upper depth left side compartments. Tunnel to hold: up to (2) 10' lengths of 6" hard suction hose. Includes vertically hinged rear smooth plate door with bent D-ring latch. | 2077 |
| 3365-0581 | Officer side vertical storage tunnel behind right side upper compartments. Tunnel to hold: up to a 24' 2-section and 14' roof up to (3) pike poles and a folding ladder. Includes a vertically hinged rear smooth plate door with bent D-ring latch and a gas tube hold-open. | 2415 |
| 3365-0585 | Ladder storage through tank for (1) 2-section 28' extension (1) 16' roof (1) 10' attic with feet and (2) pike poles. Reduces selected water tank capacity by approximately 250 gallons for pumpers and 300 gallons for tankers or large water tank pumper applications. | 3191 |
| 3365-0586 | Hard Suction Storage Box Drivers side. Located in the driver's side of the hose bed. Includes a vertically hinged (to swing into hosebed area) door with thumb latch (wired to door ajar indicator) and composite material overlay. Box to hold (1)one 6" x 15' long hard suction hose (outboard) and (1)one 4" x 10' long hose (inboard). The closed end of box shall be built to help deflect the main hose load inboard around the shorter hard suction hose length. The hard suction storage area to be open top style with the main hose bed cover used to cover both the hard suction box and main hose bed area. | 1775 |
| 3365-0587 | Hard Suction Storage Box Officers side. Located in the officer's side of the hose bed. Includes a vertically hinged (to swing into hosebed area) door with thumb latch (wired to door ajar indicator) and composite material overlay. Box to hold (1)one 6" x 15' long hard suction hose (outboard) and (1)one 4" x 10' long hose (inboard). The closed end of box shall be built to help deflect the main hose load inboard around the shorter hard suction hose length. The hard suction storage area to be open top style with the main hose bed cover used to cover both the hard suction box and main hose bed area. | 1775 |
| 3365-0588 | The storage box located [#LOC] to have a fully enclosed top. | 192 |
| 3365-0589 | Double hard suction storage rack. Two (2) racks side by side mounted to adjustable bracket. Driver side in ladder track. Includes securing strap to keep in place. Rack shall accommodate 4" hard suction hose. | 1006 |
| 3365-0590 | Storage box recessed into rear body officer side above side compartment ceiling for (1) 6in diameter X minimum 10ft. length of hard suction hose. (max hose length determined by available body length) Includes vertical hinged door (matching rear body) with D-ring latch (wired to door ajar indicator). Not available with rear of body plumbing discharges or other options requiring piping to route to pump in same location. | 709 |
| 3365-0591 | Storage box recessed into rear body driver side above side compartment ceiling for (1) 6in diameter X minimum 10ft. length of hard suction hose. (max hose length determined by available body length) Includes vertical hinged door (matching rear body) with D-ring latch (wired to door ajar indicator). Not available with rear of body plumbing discharges or other options requiring piping to route to pump in same location. | 709 |

| Item No. | Description | |
|---|---|---|
| 3365-0599 | Officer side Combination tunnel upper compartment Contents: (1) 6" x 10' hard suction hose (not included) stored in upper tunnel. Includes necessary plate work and bolt in removable floor between tube and lower tunnel as stored with end stops to prevent the tube from sliding forward into body during transit. Includes Nylatron or similar flooring material to ease deployment of hose. | 628 |
| 3365-0600 | Officer side vertical storage tunnel. For use with low hose bed. Tunnel to hold: [#LOC]. Includes vertical hinged rear diamond plate door(s) with bent D-Ring latch. | 2263 |
| 3365-0601 | Hard Suction Storage Box Horz. Located in the [#LOC] hose bed. Includes vertical hinged aluminum smooth plate DA finish door (wired to door ajar) w/D-ring style latch and nylatron flooring. Top of box to feature hose bed slat flooring to accommodate storage of additional hose above the box as applicable per hose bed available depth. Box to hold (2) 10' hard suction hoses horizontal positioned side by side. | 1893 |
| 3365-0602 | Hard Suction Storage Rack. Driver side raised above the compartment top. Includes spring hold downs and scuff plates behind spring mounts (as applicable). Rack to include brackets on hose bed side to raise the hard tube above compartment top to clear optioned scene lights or similar equipment mounted on compartment top. | 485 |
| 3365-0603 | Storage box for (1) Fresno ladder model 14-701. Aluminum with job color painted finish located behind the ground ladders on the officer's outside of the body. Box will be open at the rear and include nylon strap(s) to secure the ladder during transit. | 1599 |
| 3365-0604 | Storage tunnel to be completely enclosed to prevent road grime dust water or snow from entering into the storage tunnel. | 781 |
| 3365-0605 | Hosebed storage box. Includes hinged raised compartment lid with turn latches and grab handle(s) wired to door ajar indicator in cab. Includes LED light that shall illuminate when the lid is in the open position. | 1023 |
| 3365-0606 | Internal ladder tunnel storage with vertically hinged smooth plate door (wired to door ajar). Access door to be located to the rear of the officer's side body. Storage tunnel capable of holding: (1) 2-Section (1) Roof (1) Attic (2) pike poles. | 3069 |
| 3365-0607 | Hard Suction Storage Box Vert. Located in the hosebed as specified in hose load table between lays of hose. Includes vertical hinged diamond plate door (wired to door ajar) w/push-button latch and nylon flooring. Box to hold two (2) 6in x 10ft. hard suction hoses and two (2) 3in. X 10ft. hard suction hoses vertical stacked. Both sides of the storage box shall be hosebed dividers full available height and length as applicable per location. | 2702 |
| 3365-0609 | Hard suction storage boxes welded one each side to upper body hose bed side sheets to be painted as applicable. Includes vertically hinged brushed stainless steel rear access doors and aluminum hose trays without forward travel limit stops to allow storage for longer hose. Maximum hose length is 11'-6". Requires minimum 88" high body. | 2961 |
| 3365-0612 | The ladder storage shall be designed so that the ground ladders shall be not be nested and can be individually removed. | 544 |
| 3365-0615 | Pre-connect storage horizontal divider to be attached to hose bed side wall hinged to outboard side on each outer lay in hose bed. Divider to be fabricated from .25in thick smooth plate aluminum with drainage slots to allow for water shed w/staked stainless steel hinge to allow for loading in the lower lay when the divider is in the open position. Divider inboard of divided hose bed storage to have an angle mounted for the hinged divider to rest upon when in loaded position. This to allow for 2 vertical stacked hose storage areas to accommodate (2)double stack 2.5in. DJ lays on each side of hose bed to fit 200ft of hose in each lay upper and lower. Upper lay to be pre connected and the lower lay to be a dry lay for additional hose if need arises on scene. Main hose bed vertical dividers added separately to order. Locate one divider in the driver side first lay area and the other in the officer side last lay area of the hose bed. | 498 |
| 3365-0616 | (1) pike pole storage tube. Locate inboard side of ladder rack with pike pole hook stored in the up position or as applicable to hook. | 303 |
| 3365-0617 | Officer side vertical storage tunnel. For use with low hose bed. Tunnel to hold: [#LOC]. Includes vertically hinged rear smooth plate door(s) with D-Ring latch. | 2263 |
| 3365-0618 | Storage box for (2) two 12' length of hard suction hose. Includes vertically hinged door with latch (wired to door ajar indicator). Locate to drivers side below "T" of tank. | 1428 |
| 3365-0619 | Four (4) pike poles and a folding ladder tucked behind ground ladders on the adjustable ladder tracks. The bottom two (2) are standard pike poles and the upper two (2) are roof hook pike poles. The rear end of the pike pols to be 2" short of the end of the body side. | 1268 |
| 3365-0620 | Backboard Storage Box adjustable and mounted horizontally located in the hose bed. Includes horizontally hinged drop down door (wired to door ajar) w/push-button latches. Box to hold (1) backboard. The storage box opening shall be 3" high x 20" wide and a stop at 76" deep. The box to be full length of the hosebed. | 799 |

| Item No. | Description | |
|---|---|---|
| 3365-0623 | Thru tank for (1) 5in. x 8ft. jet dump discharge hose with elbow and 2 ft. drop pipe. For use with Jet Dump and Folding drop tank. Reduces selected water tank capacity by 40 gallons. To include a storage bracket to accommodate horizontal positioning of the elbow pipe above jet dump and tank fills in B1. Bracket to be attached to compartment wall and shall be .25 in. thick and have a rounded notch in the top side for the dump pipe to rest in with a strap with nylon buckle attached to rear wall above and below pipe as stowed to secure the pipe for transit. | 2575 |
| 3365-0626 | The [#LOC] door(s) shall have [#COL] latch(es). | 1799 |
| 3365-0632 | The driver side of the upper rear body panel area shall have a storage area for one (1) standard backboard stored vertically. Board to be industry standard backboard size of 72" long x 17" wide x 3" high. This area shall also retain a folding 6 foot 'A' frame ladder 24" wide x 7" high. Both ladder and back boards are customer supplied. Includes a rear facing smooth aluminum vertically hinged access door with stainless steel bent D-ring latch. | 2126 |
| 3365-0633 | Hard suction storage racks. Located in the drivers and officer's side hose outer beds. Forward section of hose to be under the upper water tank cover. Nylon buckle strap assemblies installed at the rear openings. Each to hold (1) 6" x 10' long tube. | 1582 |
| 3365-0634 | Recessed pike pole storage compartment located right rear of body up high at hose bed level under roof top compartments. Compartment sized to store (4) 10' pike poles. Not available if reels are optioned in roof top compartments with cord or hoses deployed in compartments below. | 1061 |
| 3365-0635 | Hard suction storage box horizontal side by side. Located in the driver's side hose bed. Includes drop down smooth plate door (wired to door ajar) w/bent D-ring latch hose bed style top and flooring. Box to hold (2) 6" x 10' long tubes. | 1799 |
| 3365-0636 | Officer side vertical storage tunnel. For use with low hose bed. Tunnel to hold: [#LOC]. Includes vertical hinged rear smooth plate door(s) with stainless steel bent D-ring latch. | 2263 |
| 3365-0637 | Two (2) multipurpose hooks and a folding ladder tucked behind ground ladders on the adjustable ladder tracks on the officer's side outside of the hose bed. | 1268 |
| 3365-0638 | Officer side vertical storage tunnel behind reduced upper depth right side compartments. Tunnel to hold: 24' 2-section and 14' roof plus (2) pike poles and a folding ladder and STD backboard. Includes vertically hinged rear smooth plate door with bent D-ring latch. | 2398 |
| 3365-0640 | Recessed folding ladder and pike pole storage compartment located right rear of body up high. Compartment sized to store a 10' ladder with feet and (3) up to 12' in length pike poles. | 1516 |
| 3365-0641 | A bolt on aluminum fabricated sign plate approx 19.75" X 187 mounted to the exterior vertical surface of the hydraulic ladder rack. This shall provide a mounting surface for lights along with an area for graphics. Sign plate shall be painted job color. | 1097 |
| 3365-0642 | Ladder tunnel. Located at frame height in B1 offset to the officer side. Ladders stored on-beam. Includes chain retention assembly. | 3427 |
| 3365-0643 | One (1) multipurpose hook and a folding ladder above ground ladders on the adjustable ladder tracks on the officer's side outside of the hose bed. The aluminum tube for the hook will be welded to the mounting bracket in lieu of a clamp. | 1012 |
| 3365-0644 | Dual hold down brackets to secure a 2-section extension and roof ladder. Includes an additional full height Unistrut channel. | 279 |
| 3365-0645 | A pair of PAC TRAC positive locking brackets for a D handle pike pole. Locate outboard side of rack | 350 |
| 3365-0647 | (4) aluminum pike pole storage tubes. (4) 48" pike pole tubes to be located just below full depth compartment ceiling of L3/B1/R2 rearward and horizontally mounted (2) each side offset from the other (2) for dealer supplied and installed trash hooks. End of each tube to be 6" in from inside door opening. Dealer is to supply and install required retaining devise for hooks. | 728 |
| 3365-0648 | Hard suction storage thru tank for (4) 6" x 10' hard suction hoses. Includes a smooth plate horizontal drop down hinged door wired to door ajar with push button latch. Reduces selected water tank capacity by approximately 250 gallons. | 2968 |
| 3365-0649 | Storage box w/center divider for (2) two equal lengths of 6" hard suction hose(s) length of hose shall vary w/overall length of box. Each end of the box shall include a vertically hinged swing-out door with push-button latch (wired to the door ajar). The box and doors shall be smooth aluminum plate and painted job color. The storage box shall be located on driver side compartment top and be as long as the compartment top surface shall permit. | 1220 |
| 3365-0650 | Storage box on driver side compartment top with an open top access and seatbelt style straps with the buckle end mounted to the top of box. Box will be designed per customer specific requirements. | 2136 |
| 3365-0651 | Fire extinguisher storage rack to hold (2) extinguishers in a single horz row. Each storage area to be 11" wide x 11" high x 25" deep with a trough in the bottom (same as used in E-ONE wheelwell bottle storage. Bottom and sides of the trough to include ribbed rubber inserts. Each opening to have a vertically mounted strap. Rack to be mounted to the compartment top below off set in R1 off set forward. | 502 |
| 3365-0652 | (2) D-handle pike pole storage tubes 8' on length. Locate inboard side of ladder rack with pike pole hooks stored in the up position. | 572 |

| Item No. | Description | |
|---|---|---|
| 3365-0657 | SCBA/Fire Extinguisher storage. Locate in [#LOC]. To hold (6) bottles floor mounted. There shall be a permanent shelf located 8" off of floor. Space below shall be have 6 equally spaced openings. | 797 |
| 3365-0661 | Zico pike pole mounting brackets (PR). Locate inside transverse area in E-MAX module beneath the stokes basket storage. May limit/omit storage at this location. ZICO parts PPMB-AA and PPMB-BB. These are the brackets only and will not include any tubes or pike poles. | 189 |
| 3365-0662 | Storage for (1) 8' Dry Wall pike pole. Located in rear storage area. | 342 |
| 3365-0666 | Fire extinguisher storage rack to hold (3) extinguishers in a single horizontal row. Each storage area to be 11" wide x 11" high x 25" deep with a trough in the bottom (same as used in E-ONE wheelwell bottle storage. Bottom and sides of the trough to include ribbed rubber inserts. Each opening to have a vertically mounted strap. Loc: R1 | 753 |
| 3365-0667 | SCBA/Fire Extinguisher storage rack. Locate in [#LOC]. To hold (6) bottles- (1)wide/(6)high. Bottles to be stored angled upward in the compartment. The bottom and sides are to include ribbed rubber inserts. | 574 |
| 3365-0668 | Ladder storage thru tank for (1) 3-section 24' extension (1) 12' roof (1) 10' attic with feet and (2) pike poles. Reduces selected water tank capacity by approximately 300 gallons. | 3474 |
| 3365-0669 | Pike pole storage box. Located in the officer side of the hose bed (full length). Includes vertically hinged door (wired to door ajar) w/push-button latch. Box to hold: (3) 10' pike poles(NY hooks). | 1267 |
| 3365-0671 | Storage box removable bolt-in located in the [#LOC] hose bed. Includes smooth plate sanded sides and interior and (2) two diamond plate lids per box with raised water lip lids(wired to door ajar) w/D-ring latches and applicable lighting and hold open shocks. Box to feature an adjustable divider in the forward area of the box to hold 3-4 5 gallon foam buckets per box in place during transit. Remaining area rearward of foam pail storage to be open storage. | 3123 |
| 3365-0672 | Zico LAS-XT electric drop-down ladder rack. Rack located to officer side of body. The control switching to be located on the side pump panel with the rack being in full view of the operator during operations. | 6519 |
| 3365-0679 | Portable tank storage compartment recessed into center of water tank for (1) 2100 gallon portable tank. Forward portion to include stop for portable tank. Includes lift up smooth plate door with Bent-D ring latch located above the B1 compartment. Reduces water capacity by approximately 120 gallons. Porta-tank not included. | 3527 |
| 3365-0683 | Hard suction storage box welded left side to upper body hose bed side sheet for dual vertically stacked 10' hose. Painted as applicable. Includes vertically hinged smooth aluminum rear access door and aluminum hose trays with forward travel limit stops. Requires minimum 93" high pumper body. | 2427 |
| 3365-0686 | Overhead Zico storage rack door modification: The gas shock shall be mounted in such a way that it would be capable of being removed from the outside of the apparatus with the door in up or down position. | 234 |
| 3365-0688 | Storage box located [#LOC]. Content of the storage to be horizontal and include a horizontaly hinged door w/D-Ring style latch (thumb latch if space is restricted). The box is to be the full length of the available hose bed and include stop(s) as needed for storage content. | 1799 |
| 3365-0690 | Officer side vertical storage tunnel. For use with low hose bed. Tunnel to hold: (1) 2-section 20' ladder and (2) backboards. Includes vertical hinged rear boxed out smooth plate door(s) with push-button latch. Includes upper hose bed style flooring. | 2263 |
| 3365-0695 | A pair of PAC TRAC positive locking brackets for a D handle pike pole. Locate inboard side of rack | 350 |
| 3365-0698 | Upper hosebed storage area above driver side compartments as applicable. Upper storage area to have an open top and run length of the hosebed area. Includes hosebed style flooring. | 1103 |
| 3365-0699 | Hard Suction Storage Rack. Driver side on top of Zico drop down rack. Includes spring hold downs and scuff plates behind spring mounts (as applicable). | 442 |
| 3365-0700 | Double Hard Suction Storage Rack for 15' hard suction hoses. Driver side compartment top. Includes spring hold downs with scuff plates (as applicable) | 1260 |
| 3365-0701 | Hard Suction storage driver side compartment top. Includes diamond plate boot at forward compartment top for hard suction hose end . | 294 |
| 3370-0023 | Tracks for adjustable shelf and/or adjustable tray in single depth or rescue style single depth compartment. Location: [#LOC]. | 212 |
| 3370-0025 | Shelf permanent shelf. Locate in [#LOC]. | 111 |
| 3370-0026 | Adjustable shelf. For compartments that are full height/full depth or lower compartments with full depth. Location: [#LOC]. | 274 |
| 3370-0027 | Tracks for adjustable shelf and/or adjustable tray in the lower area of the compartment. Location: [#LOC]. | 108 |
| 3370-0028 | Tracks for adjustable shelf and/or adjustable tray in the upper area of the compartment. Location: [#LOC]. | 59 |
| 3370-0029 | Adjustable shelf. For compartments with upper shallow depth. Location: [#LOC]. | 140 |
| 3370-0032 | Upper shelf floor overlays. Includes 1/8" smooth plate full width and length of shelf and spaced .5" off shelf floor. Locate: (2) L1 (2) L3 (2) R1 (2) R3 and (1) over top of L1 tool box. | 1257 |
| 3370-0033 | Adjustable shelf modification for shelf to have 1" lips. Location: B1 upper shelf. | 125 |
| 3370-0034 | Shelf adj full transverse. Locate in [#LOC]. | 561 |

| Item No. | Description | |
|---|---|---|
| 3370-0035 | Shelf adjustable 1/2 depth in transverse compartment. Locate in [#LOC]. | 447 |
| 3370-0037 | Horizontal track(s) in the upper area of the compartment. Location: [#LOC]. | 84 |
| 3370-0039 | Adjustable shelf. For upper area of compartments with multiple depths. Location: [#LOC]. | 274 |
| 3370-0040 | Adjustable shelf for single depth or rescue style single depth compartment. Location: [#LOC]. | 274 |
| 3370-0046 | Adjustable shelf. Shelf to be notched into extended side compartment area. For compartments with upper shallow depth. Location: R3 upper. | 525 |
| 3370-0048 | Adjustable shelf with 2" lips around entire shelf. For compartments that are full height/full depth or lower compartments with full depth. Location: [#LOC]. | 588 |
| 3370-0050 | Tracks for adjustable shelf and/or adjustable tray in transverse compartment. Location: B1. | 419 |
| 3370-0051 | Tracks for adjustable shelf and/or adjustable tray in 1/2 or 2/3rds depth of transverse compartment. Location: [#LOC]. | 318 |
| 3370-0052 | Adjustable shelf (J-Style) for non-transverse compartments 16" or greater in depth. Location: [#LOC]. | 274 |
| 3370-0053 | Adjustable shelf (C-Style) for non-transverse compartments up to 15.99" in depth. Location: [#LOC]. | 140 |
| 3370-0054 | Tracks for adjustable shelf and/or adjustable tray in compartments 16" or greater in depth. Location: [#LOC]. | 212 |
| 3370-0055 | Tracks for adjustable shelf in shallow compartments up to 15.99" deep. Location: [#LOC]. | 108 |
| 3370-0056 | Tracks for adjustable shelf and/or adjustable tray in compartments 16" or greater in depth. Tracks to run from floor to just below compartment offset/ceiling. Location: [#LOC]. | 212 |
| 3370-0057 | Tracks for adjustable shelf in shallow compartments up to 15.99" deep. Tracks to run from floor/compartment offset tube to just below compartment ceiling. Location: [#LOC]. | 108 |
| 3370-0063 | Tracks for electrical cord reel in the upper area of the compartment. Location: [#LOC]. | 107 |
| 3370-0064 | Adjustable shelf with 2" lips around entire shelf. Location: L3 upper shelves to foward area of compartment only. | 588 |
| 3370-0065 | Tracks for adjustable shelf and/or adjustable tray in single depth or rescue style single depth compartment. Position tracks within compartment for optimal adjustability. Track height from floor and/or ceiling may be impacted by other items located within the compartment or by general body construction. Location: [#LOC]. | 212 |
| 3370-0119 | Fixed shelf with 1" front lip. For non-transverse compartments that are 16" or greater in depth. Location: B1 mounted 9" below roll-up door drum angles to be only as large as needed. | 274 |
| 3370-0127 | Permanent shelf. Locate in R1 just above the Zico bottle racks. Front lip of shelf to be bent down. | 189 |
| 3370-0128 | Permanent shelf. Locate in B1 just above the booster reel. Front lip of shelf to be bent down. | 189 |
| 3370-0129 | Shelf 1/2 depth in transverse compartment. Rear lip to be 4" high. Locate in [#LOC]. | 483 |
| 3370-0132 | Bolt in shelf. Locate in roof top compartment driver's side just above the air bottle forward roof top compartment. | 189 |
| 3370-0133 | Tracks shall be provided for use with adjustable shelves and/or trays. The tracks shall align for use of a shallow depth adjustable shelf(s) and/or adjustable tray(s). The tracks shall be ran from floor to ceiling to allow the shallow depth adjustable shelf/tray to have full compartment height adjustability. Position tracks within compartment for optimal adjustability. The tracks as installed from floor to ceiling may be impacted by other items located within the compartment; tracks may be cut and continued again as required to provide full height adjustability. The tracks shall be vertically mounted and attached to the side and/or rear walls of the compartments. Location: [#LOC]. | 212 |
| 3370-0134 | Permanent shelf to have 1" lips. Location: [#LOC]. | 125 |
| 3370-0138 | Permanent shelf. Locate in L1 just above the CAFS foam system components. Front lip of shelf to be bent down. | 189 |
| 3370-0140 | The R2 Compartment shall include Unistrut. (1) Piece each side centered and (4) on back wall evenly spaced. | 389 |
| 3370-0142 | Permanent shelf for Hurst power unit. Locate on forward bulkhead high as possible [#LOC]. | 760 |
| 3370-0144 | Permanent shelf bolt in suspended from ceiling and forward in compartment. Locate in [#LOC]. | 335 |
| 3370-0145 | Adjustable shelf modification for shelf to have 1" lips. Location: B1 lower shelf. | 125 |
| 3370-0146 | The interior shall include adjustable track extrusion horizontally on interior side walls from the front wall of the body to the forward walls of the L2/R2 compartments. Locate (1) at 24" above the floor and the (1) at 42" above the floor. | 389 |
| 3370-0148 | TBD. | 274 |
| 3370-0149 | Adjustable shelf. For non-transverse compartments that are 16" or greater in depth. The shelf shall have a minimum 2" front rear and side lips. Location: [#LOC]. | 302 |
| 3370-0152 | Fixed shelf with 1/2" front lip. For non-transverse compartments that are 16" or greater in depth. Location: L1 mounted 10" above floor full width of compartment. | 274 |
| 3370-0154 | Adjustable shelf with 2" lips around entire shelf. For compartments that are shallow up to 15.99" depth. Location: [#LOC]. | 259 |
| 3370-0157 | Adjustable "C" style shelf. For non-transverse compartments that are 16" or greater in depth. Location: [#LOC]. | 274 |

| Item No. | Description | |
|---|---|---|
| 3370-0158 | Tracks on rear wall of compartment for equipment mounting. Three (3) aluminum adjustable shelf tracks shall be vertical mounted on the rear wall of the L2 compartment over rear wheel. Tracks shall be located forward and rearward offset from compartment walls 4 inches in the compartment and one centered in the compartment. Tracks shall be for mounting customer equipement and shall not have any shelves included. | 176 |
| 3370-0161 | Stainless steel adjustable shelf. For non-transverse compartments that are 16" or greater in depth. Location: [#LOC]. | 329 |
| 3370-0162 | Stainless steel adjustable shelf. For non-transverse compartments that are up to 15.99" deep. Location: [#LOC]. | 168 |
| 3370-0163 | Fixed shelf [#LOC] compartment. Locate just above compartment optioned reel toolbox storage box or similar floor mounted option. | 194 |
| 3370-0167 | Mount two (2) pieces of shelf track horizontal from front to back on the back wall for attaching SCBA air bottle brackts to. Use old style adjustable track part # 273490. Locate [#LOC]. | 248 |
| 3370-0168 | Smooth plate boxed aluminum fixed shelf shall be provided for booster reel mounted high in the B1 compartment. To include cross structure extrusions thru compartment side to side under reel. | 419 |
| 3370-0171 | Compartment R2 to have an "L" shaped shelf bolted to the ceiling and front wall to support the (8) air bottle storage. | 355 |
| 3370-0172 | Adjustable shelf (J-Style) for non-transverse compartments 16 in. or greater in depth. Shelf to be partial depth and extend from back wall 18in. or as applicable per compartment depth options. Design to offset attach to standard location adjustable tracks and relief notch as needed to adjust at breaker box or similar compartment mounted options.. Location: [#LOC]. | 274 |
| 3370-0175 | Fixed corner shelves with 1" front and side lip. For non-transverse compartments that are 16" or greater in depth. Location: L3 mounted (1) each side for (1) gal fuel cans. | 305 |
| 3370-0177 | Fixed hanging shelf without front lip. For non-transverse compartments that are 16" or greater in depth. 30" wide x 5" high x 24" deep. Includes nylon buckle strap assembly vertically across the center of the opening. Location: R3 mounted rearward at the ceiling of the full depth compartment area. | 274 |
| 3370-0178 | Permanent shelf. Locate in L3 approximately 1/2 depth of compartment even with bottom of lower 3x3 extrusion at turntable access panel on back wall. | 100 |
| 3370-0179 | All adjustable and fixed shelves to be extended outboard towards door opening and inboard towards back wall as far as possible. Note outboard corners may require notching for compartment track lighting (if applicable). | 431 |
| 3370-0181 | Fixed shelf with 1" front lip. For non-transverse compartments that are 16" or greater in depth. Location: L2 mounted above air bag module full width of compartment. | 274 |
| 3370-0182 | Permanent shelf bolt in and full transverse mounted located above the upper transverse Speedlay assembly as low as the speedlay plumbing and tray will allow. | 335 |
| 3370-0185 | Permanent shelf. Locate in L3. Front lip of shelf to be bent down. | 189 |
| 3370-0187 | Permanent shelf. Locate in R1. Locate the shelf to bottom of the rear suction cover box.. | 111 |
| 3370-0188 | All shelves adjustable and permanent to have 4" lips IPOS. | 449 |
| 3370-0189 | Adjustable shelf with inverted for mounting of adjustable trays due to the gear box cover for the ladder rack. For compartments that are full height/full depth or lower compartments with full depth. Location: L1. | 274 |
| 3370-0190 | Permanent shelf. Locate in Battery compartment. Height to be approximately 2" above chassis batteries. | 111 |
| 3370-0191 | Adjustable shelf (C-Style) tilted at 45 degrees (inboard edge tilted up) for mounting miscellaneous tools. Includes fixed mounted peg toolboard attached to shelf for tools to mount too. Toolboard to be spaced off shelf a half inch. Location: [#LOC]. | 489 |
| 3370-0192 | Permanent shelf bolt in and full transverse mounted located in L1/R1 just above breaker box. | 335 |
| 3370-0193 | Adjustable shelf (C-Style) for non-transverse compartments up to 15.99" in depth. Shelf to be half the width of the compartment. Location: [#LOC]. | 140 |
| 3370-0196 | Adjustable shelf for non-transverse compartment. Location: [#LOC]. | 274 |
| 3370-0198 | Permanent shelf. Locate in [#LOC]. | 111 |
| 3370-0199 | Vertically mounted tracks for adjustable shelves and/or trays for non-transverse compartment [#LOC]. | 212 |
| 3370-0202 | Adjustable shelf for non-transverse compartment. The shelf shall have inverted lips. Location: [#LOC]. | 274 |
| 3370-0206 | Permanent mounted shelf for non-transverse compartment. The shelf shall have inverted lips. Location: [#LOC]. | 274 |
| 3370-0214 | Tracks for adjustable shelf in shallow compartments up to 15.99" deep. Location: [#LOC]. | 212 |
| 3370-0215 | Adjustable shelf (C-Style) for non-transverse compartments up to 15.99" in depth. For shelf tracks mounted on front and rear side compartment walls. Location: [#LOC]. | 279 |
| 3380-0014 | Roll-out generator tray. Includes tray interlock. Locate [#LOC]. | 888 |
| 3380-0015 | Fixed back wall mounted toolboard. Toolboard to be spaced off wall a half inch. Location(s): [#LOC]. | 247 |
| 3380-0017 | Floor mounted slide master roll-out/tilt down tray. Single depth. Mount on [#LOC] floor. | 1251 |

| Item No. | Description | |
|---|---|---|
| 3380-0018 | Adjustable roll-out toolboard. Includes upper and lower adjustable track with 250 lbs. slides and gas shock actuated. Toolboard sized to compartment height and depth as applicable. Location(s): [#LOC]. | 919 |
| 3380-0019 | Running board suction tray. Includes removable slats in bottom of tray. Location(s): [#LOC] | 585 |
| 3380-0021 | Hard suction hose storage tray. Locate on inboard side of overhead ladder rack. Includes (2) securing straps. | 467 |
| 3380-0022 | Floor mounted roll-out tray. Includes 500lbs. tray capacity. Location: [#LOC]. | 973 |
| 3380-0023 | Adjustable mounted roll-out/tilt-down tray. Location(s): [#LOC]. For use in single depth or rescue style compartments. | 1580 |
| 3380-0024 | Adjustable mounted roll-out tray. Includes 250 lbs tray capacity. Location(s): [#LOC] | 1072 |
| 3380-0025 | Adjustable mounted roll-out tray. Includes 500 lbs tray capacity. Location(s): [#LOC] | 1302 |
| 3380-0027 | Floor mounted SlideMaster with tray. Model SM3-SP. Single depth. Mount on [#LOC] floor. | 1002 |
| 3380-0028 | Adjustable mounted Slide Master with tray. Model SM3-SP. Single depth. Location(s): [#LOC] | 1327 |
| 3380-0029 | Floor mounted Bi-Directional Slide Master with tray. Model SM2-D-SP. Mounted on [#LOC]. | 1725 |
| 3380-0030 | Adjustable mounted bi-directional Slide Master with tray. Model SM2-D-SP. Mounted in transverse area of [#LOC]. | 2050 |
| 3380-0033 | Hard suction hose storage tray. Locate on top of Zico drop-down ladder rack. | 933 |
| 3380-0036 | Fixed wall mounted peg tool board. Tool board to be spaced off wall a half inch. Location(s): [#LOC]. | 296 |
| 3380-0038 | Floor mounted roll-out tray with Jonathan Slides. Includes 400lbs. tray capacity. Mount on [#LOC] floor. | 1702 |
| 3380-0039 | Adjustable mounted roll-out tray with Jonathan Slides. Includes 400 lbs tray capacity. Location(s): [#LOC] | 2029 |
| 3380-0040 | Vertical hinged swing-out tool board. Location: [#LOC]. Hinge along forward compartment wall and position centered between door and back wall. Includes butterfly latch to secure in the closed position that is accessible from the ground. | 1726 |
| 3380-0041 | PAC TRAC panels vertical stacked with tool mounting grooves orientated horizontal on back wall of compartment. Locate: [#LOC]. | 891 |
| 3380-0043 | Toolbox with slide out trays L1 offset forward. To include (4) individual trays mounted on slides. Reference photos and drawings in engineering file. Each tray to lock in and lock out. Include a 3/16" permanent shelf located directly above top of toolbox. Includes cover plate between tool box and forward compartment wall. | 3161 |
| 3380-0044 | Toolbox with slide out trays L3 offset forward (forward of partion). To include (7) individual trays mounted on slides. Reference photos and drawings in engineering file. Each tray to lock in and lock out. Include a 3/16" permanent shelf located directly above top of toolbox. Includes cover plate between tool box and forward compartment wall. | 5249 |
| 3380-0045 | Floor mounted Slide Master with tray. Model SM3-SP. 1/2 depth transverse or full depth on non transverse. Mount on [#LOC] floor. | 1305 |
| 3380-0046 | Adjustable mounted Slide Master with tray. Model SM3-SP. 1/2 depth in transverse compartments or full depth in upper B1. Mounted in transverse area or extended area of [#LOC]. | 1655 |
| 3380-0047 | Floor mounted Slide Master with tray. Model SM3-SP. 2/3rds deep. Mount on [#LOC] floor. | 1463 |
| 3380-0049 | Running board suction tray (floating style). Includes tapered 3" front corner and removable slats in bottom of tray. Location(s): [#LOC]. | 759 |
| 3380-0050 | Floor mounted double stacked tray with 500# slides in B1. | 1204 |
| 3380-0051 | PAC TRAC panels on permanent shelf/floor of compartment. Locate: [#LOC]. | 300 |
| 3380-0055 | Floor mounted roll-out/tilt down tray with aluminum frame. Mount on [#LOC] floor. | 1218 |
| 3380-0056 | Adjustable mounted roll-out/tilt down tray with aluminum frame. Location(s): [#LOC]. For use in single depth or rescue style compartments. | 1542 |
| 3380-0059 | Running board suction tray. Outboard (front) wall of tray and rubrail hinged at the bottom with quick release latches for drop down door. Includes tapered 3" front corner and removable slats in bottom of tray. Location(s): [#LOC] | 945 |
| 3380-0060 | Adjustable tool board with 500 lbs slides. Includes upper and lower adjustable track and gas shock actuated. Tool board sized to compartment height and depth as applicable. Location(s): [#LOC]. | 1263 |
| 3380-0061 | Compartment underbody. Includes drop down front door with D-ring latches. Locate [#LOC]. | 1707 |
| 3380-0062 | Adjustable peg tool board. Includes upper and lower adjustable track and gas shock actuated. Tool board sized to compartment height and depth as applicable. Location(s): [#LOC]. | 1104 |
| 3380-0063 | Ready Respond Storage cabinet. Includes (5) drawers with gray fronts. No side trim required. Locate floor mounted in [#LOC]. | 4521 |
| 3380-0064 | Floor mounted roll-out tray. Includes 250lbs. tray capacity. Mount on B1 floor. Front and rear lips of tray to be 9.5". | 2084 |
| 3380-0065 | Vertical hinged swing-out toolboard. Location: [#LOC]. Hinge along forward compartment wall and position centered between door and back wall. Includes D-Ring latch to secure in the closed position that is accessable from the ground. | 1726 |
| 3380-0067 | Poly box(s) to be located [#LOC]. Box(s) depth (front to rear) to be sized for placement on floor/shelf or tray as applicable to compartment options. Box sized [#COL] | 366 |

| Item No. | Description | |
|---|---|---|
| 3380-0068 | Floor mounted equally sized roll-out trays (PR). Includes 250lbs. tray capacity. Mount on [#LOC] floor. | 1488 |
| 3380-0071 | Tool board on dual direction 1000 lb. SlideMaster. Includes lock-in/lock-out. Tool board sized to compartment height and depth as applicable. Location(s): [#LOC]. | 2473 |
| 3380-0072 | Running board suction tray. Includes removable slats in bottom of tray. Tray to be as long as possible. Location(s): [#LOC]. | 1168 |
| 3380-0073 | Slidemaster frame powder coated silver. Location(s): [#LOC] | 134 |
| 3380-0074 | Tool board HD adjustable. Includes upper and lower adjustable track and is gas shock actuated return style re-enforcing bends on vertical front and rear edges of tool board upper and lower adjustable track and gas shock actuated. Tool board sized to compartment height and depth as applicable. Location(s): [#LOC] | 982 |
| 3380-0075 | Running board suction tray (floating style). Includes tapered 3" front corner and removable slats in bottom of tray. Tray to be as long as possible. Location(s): [#LOC]. | 1138 |
| 3380-0076 | Tray floor mounted roll-out with gas spring. 500 lbs. capacity. Location: [#LOC]. | 747 |
| 3380-0077 | Tray adjustable roll-out with 500 lbs. capacity and a gas shock. Location(s): [#LOC]. | 1072 |
| 3380-0078 | Compartment underbody with slide-out tray. Includes drop-down front door with push-button latch(es). [#LOC]. | 2113 |
| 3380-0079 | Adjustable heavy duty tool board with 500 lbs. capacity. Includes return style reinforcing bends on vertical front and rear edges of tool board upper and lower adjustable track and gas shock actuated. Tool board sized to compartment height and depth as applicable. Location(s): [#LOC]. | 982 |
| 3380-0080 | Adjustable heavy duty tool pegboard with 500 lbs. capacity. Includes return style reinforcing bends on vertical front and rear edges of tool board upper and lower adjustable track and gas shock actuated. Tool board sized to compartment height and depth as applicable. Location(s): [#LOC]. | 1167 |
| 3380-0081 | Roll-out generator tray. Includes tray interlock. Locate [#LOC]. | 888 |
| 3380-0082 | Slidemaster frame powder coated black (EA). Location: [#LOC]. | 134 |
| 3380-0084 | Poly toolboards to be half inch thick. Toolboards to be spaced off wall a half inch. Location(s): L2 back wall and B1 upper side and back walls. | 939 |
| 3380-0085 | Slide Master Tray in transverse. A slide master tray to be mounted in the transverse module. Tray to extended 70% either side. Top tray to hold four (4) removable speedlay trays (lower tray on slide master to have higher lips on sides and lower on sides for easier removal of trays). Each tray to have the following capacity: (1) 200' of 1.75" (1) 200' of 1.75" (1) 200' of 2.5" and last tray to hold 100' of 1.75" 100' of 1.75" and 100' of 2.5". | 3569 |
| 3380-0087 | Adjustable toolboard with 500 lb. slides for use with deep compartments. Includes upper and lower adjustable track with lock in/lock out latch. Toolboard sized to compartment height and depth as applicable. Location(s): [#LOC]. | 1263 |
| 3380-0089 | Poly tray liners. Locate in the B1 floor mount B1 adjustable mounted and R3 floor mounted trays. Liner to have hand holes. | 571 |
| 3380-0090 | Aluminum tool box(es) to be 8" wide x 10" high x 25" deep. Location: L1 compartment floor. | 236 |
| 3380-0091 | Floor mounted preconnect roll-out tray. Includes 500lbs. tray capacity with (3) 5" tall sides and rear (front to be 2" with area for hand-hold cut-out on each end). To hold up to 150' of 1.75" DJ and placed on top of black dri-deck. Tray to have rotary latching IPO shock(s). Location : [#LOC]. | 1099 |
| 3380-0093 | Floor mounted roll-out/tilt down tray. Mount on [#LOC] floor. For use on half transverse trays. | 1251 |
| 3380-0094 | Floor mounted roll-out/tilt down tray. Mount on [#LOC] floor. For use on two thirds transverse trays or in the B1above the frame rails. | 1251 |
| 3380-0095 | Adjustable mounted roll-out/tilt down tray. Location(s): [#LOC]. For use on 1/2 depth transverse trays or upper deep B1 compartment. | 1580 |
| 3380-0096 | Adjustable mounted roll-out/tilt down tray. Location(s): [#LOC]. For use on 2/3 deep transverse trays or B1above the frame rails. | 1580 |
| 3380-0097 | Adjustable partition in running board suction tray. Partition to be adjustable from front to back and use old style adjustable track. | 248 |
| 3380-0098 | Floor mounted Slide Master with tray. Model SMEX w/ 120% extension. 1/2 depth transverse or full depth on non transverse. Mount on [#LOC] floor. | 1844 |
| 3380-0099 | Vertical hinged swing-out toolboard. Location: [#LOC]. Hinge along rearward compartment wall and position centered between door and back wall. Includes D-Ring latch to secure in the closed position that is accessable from the ground and a positive hold open device in the open position. | 1726 |
| 3380-0103 | Running board suction tray (floating style). Includes tapered 3" front corner and Turtle Tile brand [#COL] floor matting in bottom of tray. Location(s): [#LOC] | 759 |
| 3380-0125 | Running board suction tray. Outboard (front) wall of tray and rubrail hinged at the bottom with quick release latches for drop down door. Includes removable slats in bottom of tray. Location(s): [#LOC] | 945 |
| 3380-0129 | Left side running board SS hose tray with Duradek flooring. | 606 |
| 3380-0130 | Right side running board SS hose tray with Duradek flooring. | 606 |
| 3380-0133 | On Scene Solutions floor mounted roll-out/tilt down tray mount on [#LOC] floor. This tray shall not exceed 30" in depth. | 1697 |

| Item No. | Description | |
|---|---|---|
| 3380-0134 | On Scene Solutions adjustable mounted roll-out/tilt down tray mount in the [#LOC] compartment. This tray shall not exceed 30" in depth. | 2015 |
| 3380-0140 | Generator roll-out tray. Includes tray interlock. For use with Harrison compartment mounted generator. Locate in compartment [#LOC]. | 602 |
| 3380-0142 | PAC TRAC panels vertical stacked on compartment walls with tool mounting grooves orientated horizontal (includes installation on vertical hinged compt door if applicable). Locate: [#LOC]. | 2878 |
| 3380-0143 | Compartment underbody with slide-out tray. Includes front door with D-ring latch(es). Door will be attached to the tray. Locate [#LOC]. | 2438 |
| 3380-0146 | Vertical hinged swing-out toolboard. Location: [#LOC]. Hinge along rearward compartment wall and position centered between door and back wall. Includes latch to secure in the closed position that is accessible from the ground. | 1726 |
| 3380-0147 | Poly toolboards to be half inch thick. Toolboards to be spaced off wall a half inch. Location(s): B1 side and back walls. Includes cut-out for compartment light(s). Toolboards to be approx (2) 30" high x 24" wide and (1) 30" high x 43" wide. | 1028 |
| 3380-0148 | Poly toolboards to be half inch thick. Toolboards to be spaced off wall a half inch. Location(s): L1 back wall notch around generator gauge panel. Toolboard to be approx 37" high x 32" wide. | 344 |
| 3380-0149 | Respond Ready toolbox located in the L1 compartment. Toolbox includes (4) drawers with 500 lb. lock-out slides and (4) dividers per drawer. Drawer heights to be (1) 3" (1) 4" (1) 8" and (1) 10" drawer. Includes standard top shelf gray powder coated front panels and galvanized components. Dimensions of overall toolbox 26" W x 27.5" H x 22.7" D. | 3289 |
| 3380-0150 | Fixed back wall mounted toolboard with swirled finish. Toolboard to be spaced off wall a half inch. Location(s): [#LOC]. | 405 |
| 3380-0152 | Vertical hinged swing-out toolboard adjustable in and out. Location: L2. Hinge along rearward compartment wall and position centered between door and back wall. Includes latch to secure in the closed position that is accessible from the ground. | 1726 |
| 3380-0155 | Running board suction tray. Includes Turtle Tile brand black floor matting in bottom of tray. Location(s): [#LOC]. | 585 |
| 3380-0158 | Floor mounted roll-out tray. Includes OnScene Solutions slide 81900 series. 500 lbs. tray capacity. Location: [#LOC]. | 2202 |
| 3380-0159 | Adjustable tool board with 500 lbs slides. Includes upper and lower adjustable track .75" x .75" aluminum angle welded to front edge and gas shock actuated. Tool board sized to compartment height and depth as applicable. Location(s): [#LOC]. | 982 |
| 3380-0162 | Vertical hinged swing-out pegboard toolboard. Location: [#LOC]. Hinge along rearward compartment wall and position centered front to rear. Includes latch to secure in the closed position and gas shock to secure in the open position that is accessible from the ground. | 1871 |
| 3380-0167 | Vertical hinged heavy duty swing-out toolboard. Location: [#LOC]. Hinge along forward compartment wall and position centered between door and back wall. Includes D-Ring latch to secure in the closed position that is accessible from the ground. Hinge made from 1/2" stainless steel rod and stainless steel plate with flanged bearing top and bottom. | 1812 |
| 3380-0168 | Floor mounted roll-out tray with 500 lbs. capacity. Locate in R1 offset forward. Tray to be half the width of compartment. | 747 |
| 3380-0169 | Adjustable roll-out tray with 500 lbs. capacity. Tray to have 6" lips. Location(s): [#LOC]. | 1381 |
| 3380-0173 | Vertical hinged heavy duty swing-out pegboard toolboard. Location: [#LOC]. Hinge along forward compartment wall and position centered between door and back wall. Includes D-Ring latch to secure in the closed position that is accessable from the ground. Hinge made from 1/2" stainless steel rod and stainless steel plate with flanged bearing top and bottom. | 1916 |
| 3380-0175 | Floating style left side running board SS hose tray with Duradek flooring. | 725 |
| 3380-0176 | Floating style right side running board SS hose tray with Duradek flooring. | 725 |
| 3380-0177 | Prepare upper back walls of compartment L3 and L4 with studs for dealer to provide plywood (or whatever material) toolboard panels. Studs are to be threaded stainless steel. | 329 |
| 3380-0178 | Vertical hinged swing-out toolboard. Location: R1 full height. Hinge along rearward compartment wall and position 5" in from door pan. Includes dual single point D-Ring latches to secure in the closed position that is accessible from the ground. | 1726 |
| 3380-0179 | Vertical hinged heavy duty swing-out aluminum tool board(s) shall be provided for compartment(s) [#LOC]. The tool board shall be constructed of 1/4" (.25") smooth aluminum plate peg board style and be sized in height and length as applicable. The tool board shall be position centered between door and back wall and hinged along rearward wall mounted. The hinge shall be made from 1/2" stainless steel rod and stainless steel plate with flanged bearing top and bottom that will permit the board to swing out of the compartment for easier access to tools and/or equipment. The tool board shall latch to a 3" x 3" extrusion with a Tri-Mark latch to secure the toolboard in the closed position. | 2339 |
| 3380-0180 | (2) Hand hold slotted cut-outs shall be provided on rollout tray's front wall (one each side) for easier roll-out/roll-in. Rubber trim shall line the hand cut outs. Approximate size of cut-out to be 1-1/2" x 5". Locate on each tray in [#LOC]. | 44 |

| Item No. | Description | |
|---|---|---|
| 3380-0181 | Vertical hinged swing-out toolboard. Located in [#LOC] 12" from door. Hinge along rearward compartment wall and position centered between door and back wall. Includes D-Ring latch to secure in the closed position that is accessable from the ground and a positive hold open device in the open position. | 1726 |
| 3380-0182 | Floor mounted slidemaster roll-out tray to hold (3) SCBA donning stations. Donning stations will be Zico spring clip brackets. Location [#LOC]. | 1971 |
| 3380-0187 | Dual toolboards vertical hinged heavy duty swing-out toolboards. Location: [#LOC]. The inboard toolboard shall be hinged along rearward compartment wall and positioned 8" off inboard/back wall of the compartment. The outboard toolboard shall be hinged along forward compartment wall and positioned 8" outboard of other (inboard) tool board. Includes (1) D-Ring latch per toolboard to secure in the closed position that is accessible from the ground. Hinge made from 1/2" stainless steel rod and stainless steel plate with flanged bearing top and bottom. | 3983 |
| 3380-0189 | Running board suction tray with a diamond plate door hinged on the inboard side with quick release flush latch(s) and a lanyard type holding device. Includes removable slats in bottom of tray. Location(s): [#LOC]. | 1240 |
| 3380-0190 | Vertical hinged swing-out tool board. Location: [#LOC]. Hinge along forward compartment wall and position halfway in from door opening. Includes single point D-ring latch to secure in the closed position that is accessible from the ground. | 1726 |
| 3380-0191 | Vertical hinged heavy duty swing-out toolboard. Location: [#LOC]. Hinge along rearward compartment wall and position centered between door and back wall. Includes D-Ring latch to secure in the closed position that is accessible from the ground. Hinge made from 1/2" stainless steel rod and stainless steel plate with flanged bearing top and bottom. | 1812 |
| 3380-0193 | Poly toolboards to be half inch thick. Toolboards to be spaced off interior/backwall a half inch. Location(s):[#LOC]. | 939 |
| 3380-0194 | PAC TRAC panels vertical stacked with tool mounting grooves orientated horizontal on each side of Swing-out Toolboard. Locate:[#LOC]. | 1782 |
| 3380-0195 | Poly boxes (4) to be located [#LOC]. Box depth (front to rear) to be sized for placement on floor/shelf or tray as applicable to compartment options. All (4) boxes shall be 10" in height and equal width to fill the placement area designated. | 1460 |
| 3380-0196 | Vertical hinged heavy duty swing-out pegboard toolboard. Location: [#LOC]. Hinge along rearward compartment wall and includes D-Ring latch to secure in the closed position that is accessible from the ground. Hinge made from 1/2" stainless steel rod and stainless steel plate with flanged bearing top and bottom. | 1898 |
| 3380-0197 | Floor mounted roll-out/tilt down tray with aluminum frame. Mount on [#LOC] floor. Tray(s) to have 2" high sides all around IPO standard. | 1218 |
| 3380-0198 | Adjustable mounted roll-out/tilt down tray with aluminum frame. Location(s): [#LOC]. Tray(s) to have 2" high sides all around IPO standard. For use in single depth or rescue style compartments. | 1542 |
| 3380-0199 | Floor mounted bi-directional Slide Master with tray. Model SM2-D-SP. Includes fixed toolboard centered in tray lengthwise extending up as high as possible. Toolboard to be fabricated from 1.5" square aluminum tubing for frame and centered inside of frame shall be .250" smooth plate with bracing on each end for rigidity when tools are mounted. Tray/toolboard mounted on L1/R1 transverse floor. | 2671 |
| 3380-0200 | Running board suction tray (floating style). Includes tapered 3" front corner and removable slats in bottom of tray. Location(s): [#LOC]. Trays to be smooth plate painted black durabak. | 962 |
| 3380-0201 | PAC TRAC panels vertical stacked with tool mounting grooves orientated horizontal on each side of swing-out tool board. Locate: [#LOC]. | 1782 |
| 3380-0203 | Adjustable peg tool board. Includes upper and lower adjustable track and gas shock actuated. Tool board sized to compartment height and depth as applicable. Location(s): [#LOC]. | 1066 |
| 3380-0204 | Floor mounted Slide Master with tray. Model SM3-LP (low profile). Single depth. Mount on [#LOC] floor. | 1069 |
| 3380-0206 | Adjustable peg tool board. Includes upper and lower adjustable track with lock in/lock out latch. Slides for use with deep compartments. Toolboard sized to compartment height and depth as applicable. Location(s): [#LOC]. | 1343 |
| 3380-0208 | Floor mounted rollout tray/toolboard with gas spring and 500 lbs. capacity. The vertical toolboard will be mounted on adjustable mount(s) on the floor of the roll out tray. Includes return style reinforcing bends on vertical front and rear edges of tool board. Tool board sized to compartment height and depth as applicable. Location: [#LOC]. | 1482 |
| 3380-0209 | Vertical hinged swing-out tool board. Location: L1 Hinge along rearward compartment wall and position halfway in from door opening. Includes single point D-ring latch to secure in the closed position that is accessible from the ground. | 1213 |
| 3380-0211 | Officer side running board suction tray shall have 1/2" drain holes IPOS. | 30 |
| 3380-0212 | Floor mounted rollout tray/toolboard with gas spring and 500 lbs. capacity. The vertical peg board tool board will be mounted on adjustable mount(s) on the floor of the roll out tray. Includes return style reinforcing bends on vertical front and rear edges of tool board. Tool board sized to compartment height and depth as applicable. Location: [#LOC]. | 1597 |

| Item No. | Description | |
|---|---|---|
| 3380-0220 | Floor mounted roll-out/tilt down and adjustable mounted roll-out/tilt down trays with aluminum frame. Trays to have 2" high sides all around IPO standard. Mount in [#LOC] compartment. | 2759 |
| 3380-0222 | Floor mounted roll-out inverted tray with 500 lbs. capacity. Location: [#LOC]. | 747 |
| 3380-0223 | Tool board HD adjustable. Includes return style re-enforcing bends on vertical front and rear edges of tool board upper and lower adjustable track 250LB slides and manual lock in/out latches at top. Tool board sized to compartment height and depth as applicable. Location(s): L3 | 895 |
| 3380-0224 | Floor mounted roll-out tray with gas spring. 500 lbs. capacity. Tray shall be made of 1/4" smooth aluminum. Location: [#LOC]. | 989 |
| 3380-0225 | Floor mounted Slide Master with tray. Model SMEX w/ 120% extension. 2/3rds deep. Includes fixed toolboard centered in tray lengthwise extending up as high as possible. Toolboard to be fabricated from 1.5" square aluminum tubing for frame and centered inside of frame shall be .250" smooth plate with bracing on each end for rigidity when tools are mounted. Tray/toolboard mounted on [#LOC] floor. | 2671 |
| 3380-0226 | Poly toolboards to be half inch thick. Toolboards to be spaced off wall a half inch. Location(s): B1 side and back walls. Includes cut-out for compartment light(s). Toolboards to be approx (2) 30" high x 24" wide and (1) 30" high x 36" wide. | 1028 |
| 3380-0228 | Vertical hinged swing-out Pegboard tool board. Location: L2. Hinge along rearward compartment wall and position halfway in from door opening. Includes single point D-ring latch to secure in the closed position that is accessible from the ground. | 1870 |
| 3380-0229 | Adjustable toolboard partition. With unistrut track mounted to inside of rollout tray on floor for toolboard to adjust side to side. Toolboard to be fabricated from 1.5" square aluminum tubing for frame and centered inside of frame shall be .250" smooth plate with bracing on each end for rigidity when tools are mounted. Locate in [#LOC] floor mounted roll-out tray. | 580 |
| 3380-0230 | Compartment underbody. Includes drop down front door with push-button latches. Locate: Span below R1 and R2. | 1598 |
| 3380-0233 | Adjustable roll-out tray with 500 lbs. capacity. Tray to have raised forward lip with hole(s) to accommodate mounting of captive rollers for optioned reels in compartment. Tray at full extension shall position rollers outward to provide additional protection from hoses chafing or damaging painted surfaces: [#LOC]. | 1457 |
| 3380-0236 | Vertical hinged heavy duty swing-out toolboard with storage trough(s). Location: [#LOC]. Hinge along forward compartment wall and position centered between door and back wall. Includes D-Ring latch to secure in the closed position that is accessible from the ground. The Toolboard shall include a 5" x 5" Trough enclosed on each end and running full length along the botom edge of the board both inside and outside (for as long as available space allows when fully opened) used for small containers storage. Hinge made from 1/2" stainless steel rod and stainless steel plate with flanged bearing top and bottom. | 1980 |
| 3380-0237 | Compartment underbody 30" wide. Includes drop down front door with push-button latches. The storage compartment shall hold approximately 50` of 3" DJ hose. Locate [#LOC}. | 1373 |
| 3380-0238 | Pac Trac Vertical hinged swing-out toolboard PM-1000 adjustable in and out. Location: [#LOC]. Hinge along forward compartment wall. Includes latch to secure in the closed position that is accessible from the ground. | 1783 |
| 3380-0239 | Adjustable roll-out tray with 500 lbs. capacity and a gas shock. PAC tool panel mounted on floor of tray. Location(s): L1 | 1434 |
| 3380-0240 | Floor mounted stainless steel roll-out tray. Includes OnScene Solutions slide 81900 series. 500 lbs. tray capacity. Location: [#LOC]. | 2232 |
| 3380-0243 | Adjustable roll-out tray. Includes 500lbs. tray capacity. Location: L3 compartment. The tray to be maximum of 20" deep x standard compartment width size. Use 20" long slides due to the enhanced extended compartmentation. | 1072 |
| 3380-0246 | Running board suction tray. Includes removable slats in bottom of tray. Tray inside dimensions to be 35" long from front to back x 10" from rub rail inward to pump panel x 9.5" total depth inside. Tray shall be equipped with a removable slat which will reduce the listed depth dimension. The outboard edge of the tray shall have no folded lip and shall bolt through rub rail to allow for max width. Location(s): [#LOC] | 638 |
| 3380-0247 | Floor mounted roll-out tray 48" wide sized for portable pump. Includes 500lbs tray capacity. Location: R1 offset forward. | 973 |
| 3380-0248 | Vertical hinged swing-out tool board adjustable in and out. Location: [#LOC]. Hinge along forward compartment wall. Includes single point D-ring latch to secure in the closed position that is accessible from the ground. | 1784 |
| 3380-0249 | Compartment underbody. Includes drop down front door with push-button latches. To hold approximately 25' of 5" LDH hose in each underbody compartment. Locate below L1/R1. | 1373 |
| 3380-0250 | Floor mounted Slide Master with tray. Notched. Model SM3-SP. 2/3rds deep. Notch rear forward corner to accommodate vertical exhaust to maximize utility. Finish to be sanded aluminum unless otherwise specified. Locate: L1 extended floor. | 1660 |
| 3380-0251 | Left side running board SS hose tray with Duradek flooring. Well to store 50' of 4" hose. | 606 |
| 3380-0252 | Right side running board SS hose tray with Duradek flooring. Well to store 50' of 4" hose. | 606 |

| Item No. | Description | |
|---|---|---|
| 3380-0253 | Adjustable aluminum peg toolboard with SlideMaster SM3-MP 600 lb. slides for use with deep compartments. Includes upper and lower adjustable track with lock in/lock out latch. Toolboard sized to compartment height and depth as applicable. Location(s): R1 | 1434 |
| 3380-0254 | Floating style right side running board SS hose tray with Duradek flooring. Well to be 34"L x 9"W x 11"D and offset rearward. | 749 |
| 3380-0255 | Floating style left side running board SS hose tray with Duradek flooring. Well to be 34"L x 9"W x 11"D and offset rearward. | 749 |
| 3380-0256 | Compartment with provision for 2 SCBA Bottle storage. Includes drop-down door with D-ring latch. Compartment to be located [#LOC]. | 704 |
| 3380-0261 | Roll-out generator tray. Includes tray interlock. Locate R3. 23 x 18 x 3 spaced from forward wall 8 inches. | 888 |
| 3380-0262 | Vertical hinged heavy duty swing-out toolboard. Location: L2. Hinge along forward compartment wall and position so that face of toolboard will be 6" into compartment from back of closed door. Includes D-Ring latch to secure in the closed position that is accessible from the ground. Hinge made from 1/2 | 1812 |
| 3380-0264 | PAC TRAC panels vertical stacked with tool mounting grooves orientated horizontal on forward and rearward side walls of compartment L2. | 600 |
| 3380-0265 | Tray floor mounted roll-out with gas spring. 500 lbs. capacity. The front and rear lips shall be 1.5" high. Location: [#LOC]. | 747 |
| 3380-0266 | Vertical hinged swing-out Pegboard tool board. Location: R2. Hinge along forward compartment wall and position halfway in from door opening. Includes single point D-ring latch to secure in the closed position that is accessible from the ground. | 1870 |
| 3380-0267 | Compartment underbody 66" wide with slide-out tray. Includes front door with D-ring latch(es). Door will be attached to the tray. Locate centerd below L1/L2. | 2438 |
| 3380-0268 | Tray / toolboard combination floor mounted roll-out with gas spring. 500 lbs. capacity. The tray portion to be rearward. L1 rearward of CAFS unit. | 1693 |
| 3380-0273 | Fixed back wall mounted toolboard. Toolboard to be spaced off wall a half inch. Location(s): L1 lower on forward rearward and back walls. Note toolboard fixed to back wall will be removable due to jack access. | 247 |
| 3380-0274 | Vertical hinged heavy duty swing-out toolboard. Location: [#LOC]. Hinge along forward compartment wall and position centered between door and back wall. Includes D-Ring latch to secure in the closed position that is accessible from the ground and a ball type nylon catch with a ball socket rod to hold device in the open position. Hinge made from 1/2" stainless steel rod and stainless steel plate with flanged bearing top and bottom. | 1853 |
| 3380-0275 | Vertical hinged heavy duty swing-out toolboard. Location: [#LOC]. Hinge along forward compartment wall and position 8 in. in from door opening between door and back wall. Includes D-Ring latch to secure in the closed position that is accessible from the ground and a ball type nylon catch with a ball socket rod to hold device in the open position. Hinge made from 1/2" stainless steel rod and stainless steel plate with flanged bearing top and bottom. | 1853 |
| 3380-0277 | Running board suction tray extra capacity drivers side. Includes removable slats in bottom of tray. Tray to be as long as possible and 5" deeper than standard tray depth for extra hose capacity. Location shall be on drivers side pump panel running board. (Note): ground clearance below tray will be reduced to approximately 9" over level ground. | 1384 |
| 3380-0278 | Running board suction tray. Includes removable slats in bottom of tray. Tray to be as long and as deep as possible to hold 50' of 5.00" LDH hose with Storz couplings. Location(s): officer side runningboard. | 837 |
| 3380-0279 | Floor mounted SlideMaster tray with aluminum frame. Model M3. Single depth. Mount on [#LOC] floor. | 1330 |
| 3380-0281 | Stainless steel underbody compartment with 500 lb. capacity Jonathan brand ball bearing slide drawer on the driver's and officer's side of the body forward of the rear wheels. The door face shall be constructed of brushed stainless steel and a locking bent D-ring style dead bolt latching mechanism shall be installed. Interior tray height to be 6" high while the width and depth shall fit the available area. | 6189 |
| 3380-0282 | All floor mounted and adjustable tray(s) to have 4" high sides all around IPO standard. | 449 |
| 3380-0286 | Divider / Tool Board. Weld a heavy duty gusseted vertical divider as tall as height allows and centered inside tray. Material to be 1/4 inch thick aluminum and full depth of tray. Locate: [#LOC]. | 740 |
| 3380-0288 | Adjustable mounted Slide Master with tray. Model SM3-SP. 30 inch depth. Tray shall be 30 inches deep front to rear. Locate: B1 upper area over frame rail and as close to compartment back wall as possible. Tray when at 100% extension shall partially extend outside of compartment approx 8 inches. | 1655 |
| 3380-0289 | Fixed back wall mounted peg toolboard. Toolboard to be spaced off wall an inch. Location(s): [#LOC]. | 296 |
| 3380-0292 | Tray floor mounted roll-out with gas spring. 500 lbs. capacity. For use with half transverse tray. Tray travel will be limited to 26 inches of extension. Location: [#LOC]. | 747 |
| 3380-0293 | Floor mounted bi-directional Slide Master with tray. Aluminum Model M2D. Mounted on [#LOC]. | 2060 |

| Item No. | Description | |
|---|---|---|
| 3380-0294 | Crosby Style compartment underbody with slide-out tray. Includes front door with D-ring latch(es). Door will be attached to the tray. Locate [#LOC]. | 2438 |
| 3380-0296 | Tray floor mounted roll-out with mechanical rotary latch system. 500 lbs. capacity. Location: [#LOC]. | 747 |
| 3380-0302 | Adjustable heavy duty tool board with 500 lb capacity. Includes return style reinforcing bends on vertical front and rear edges of tool board upper and lower adjustable track and gas shock actuated. Tool board sized to compartment height and depth as applicable. Upper end to be notched around compartment offset to provide maximum height. Relocate upper slide as applicable for maximum extension of toolboard. Location(s): [#LOC]. | 1052 |
| 3380-0304 | Tray floor mounted roll-out with gas spring. 500 lbs. capacity. Location: L1 Tray to include a center vertical mounted peg board divider to extend 26in. above the top of the tray lip into open area above in compartment. Peg board will be centered in tray and positioned to utilize peg board storage on the forward and rearward sides of the board as mounted. Peg board to be utilized for fitting and tool storage. | 963 |
| 3380-0306 | Fixed wall mounted peg toolboard. Toolboard to be spaced off wall a half inch on forward rearward and back wall from floor to ceiling (as practical). Location(s): [#LOC]. | 1181 |
| 3380-0307 | SlideMaster generator roll-out tray with interlock. Model SM3-SP. Single depth. Mount on [#LOC] floor. | 1164 |
| 3380-0308 | Tray divider vertical divider minimum 16" tall x tray depth x 1/4 inch thick alum pegboard. The divider will be adjustable as located within the tray in L2. | 494 |
| 3380-0309 | Floating style right side running board SS hose tray with Duradek flooring. Well to be 46"L x 8.5"W x 11"D to retain (2) 50' doughnut rolls of 4" LDH hose. | 749 |
| 3380-0312 | Fixed wall mounted peg toolboard. Toolboard to be spaced off wall a half inch on forward rearward and back wall from floor to ceiling as practical. Location(s): [#LOC]. | 886 |
| 3380-0314 | Vertical hinged heavy duty swing-out toolboard. Location: R2. Hinge along forward compartment wall and position centered between door and back wall. Includes Tri-Mark latch to secure in the closed position that is accessible from the ground. Hinge made from 1/2" stainless steel rod and stainless steel plate with flanged bearing top and bottom. | 1901 |
| 3380-0315 | Floating style right side running board SS hose tray with Duradek flooring. Well to be 50"L x 8.5"W x 8"D and includes (2) divided areas offset rearward for 2.5 gal water can extinguisher storage. | 828 |
| 3380-0316 | Vertical hinged severe duty swing-out tool board. Location:[#LOC] Hinge along rearward compartment wall and position centered between door and back wall. Includes positive lock to secure in both closed and open position that is accessible from the ground. Heavy duty pivots for 400lb weight capacity on tool board. Tool board is to be Peg board style with 1in. on center pattern for the peg board holes. | 4173 |
| 3380-0317 | Tray adjustable roll-out with 500 lbs. capacity and a gas shock. There shall be 3" clearance between the back of the tray and all mounting hardware to the back wall of compartment. Location(s): L3. | 1072 |
| 3380-0318 | Floor mounted Slide Master with flat plate. Model SM3-MP (Mid profile) with 300 Lb capacity. For use with deep compartments. Located upper pump module compartment. | 1301 |
| 3380-0320 | PAC TRAC panels vertical stacked with tool mounting grooves orientated horizontal on each side of (1) roll-out tool board. Tool board not included & requires a tool board selection. Locate in compt [#LOC]. | 1782 |
| 3380-0322 | Floor mounted roll-out tray. Includes 500lbs. tray capacity. No lip on tray. Location: L3. | 973 |
| 3380-0326 | Fixed back wall mounted plywood (Grade A Birch) tool boards. Includes (3) coats of varnish. Toolboards to be spaced off wall a half inch. Location: (1) L3 upper (1) R1 upper (1) R2 & (1) R3 upper. | 1224 |
| 3380-0327 | Adjustable mounted Hansen roll-out/tilt-down tray. Location(s): R2. For use in single depth or rescue style compartments. | 1580 |
| 3380-0328 | Adjustable heavy duty two sided peg board roll-out aluminum tool board with hidden gas shock . Includes return style re-enforcing bends on vertical front and rear edges of tool board with boxed in design upper and lower adjustable track and gas shock actuated. Tool board sized to compartment height and depth as applicable. Location(s): [#LOC] | 1167 |
| 3380-0329 | Adjustable heavy duty two sided tool board with 500 lbs. capacity. Includes return style reinforcing bends on vertical front and rear edges of tool board and boxed in design upper and lower adjustable track and gas shock actuated. Tool board sized to compartment height and depth as applicable. Location(s): [#LOC]. | 982 |
| 3380-0330 | Fixed back wall mounted plywood (Grade A Birch) toolboard. Includes (3) coats of varnish. Toolboard to be spaced off wall a half inch. Location: (1) L2 | 533 |
| 3380-0331 | Floor mounted Slide Master with tray. Model SM3-SP. 1/2 depth transverse or full depth on non transverse. Tray side walls to be 6 inches tall. Design includes (4) four 2 inch diameter holes equally spaced each side wall of tray for hold down strap attachment. Mount on [#LOC] floor. | 1568 |
| 3380-0333 | Running board suction tray (floating style). Includes tapered 3" front corner and removable slats in bottom of tray. Tray to be as long as possible. Also tray to be wider than standard to accommodate three lays of 1.75" DJ hose. Requires 2" wider running board. Location(s): [#LOC]. | 1042 |

| Item No. | Description | |
|---|---|---|
| 3380-0334 | Vertical hinged heavy duty swing-out toolboard. Location: [#LOC]. Hinge along forward compartment wall and position close at door opening just inside envelope to clear door. Customer to utilize the back wall of the compartment and the back wall of the swing out tool board only. Includes D-Ring latch to secure in the closed position that is accessible from the ground. Hinge made from 1/2in. stainless steel rod and stainless steel plate with flanged bearing top and bottom. | 1812 |
| 3380-0335 | PAC TRAC panels vertical stacked with tool mounting grooves orientated horizontal on back side of Swing-out Tool board. Locate:[#LOC]. | 890 |
| 3380-0336 | Vertical hinged swing-out peg tool board as large as practical for size of compartment. Location: R4. Hinge along rearward compartment wall. Adjustable depth with upper and lower stainless Unistrut channels. Includes single point D-ring latch to secure in the closed position that is accessible from the ground. | 2500 |
| 3380-0337 | Tool Board PAC brand double sideded adjustable slide out tool board on slide p/n VSO-24. Locate (1) in compt. [#LOC]. | 1974 |
| 3380-0338 | Adjustable mounted Hansen roll-out/tilt-down tray. Location(s): R1. For use in single depth or rescue style compartments. | 1580 |
| 3380-0339 | Running board suction tray with extra capacity (see drawing for details). Includes removable slats in bottom of tray. Location(s): [#LOC] | 701 |
| 3380-0340 | PAC TRAC panels vertical stacked with tool mounting grooves orientated horizontal on rearward wall of compartment. Locate: [#LOC]. | 891 |
| 3380-0345 | Running board suction tray. Includes removable slats in bottom of tray. Tray to be as long as possible. Also tray to be wider than standard to accommodate three lays of 1.75" DJ hose. Requires 2" wider running board. Location(s): [#LOC]. | 1336 |
| 3380-0347 | Vertical hinged swing-out tool board adjustable in and out. Location: [#LOC]. Hinge along rearward compartment wall. Includes single point D-ring latch to secure in the closed position that is accessible from the ground. | 1784 |
| 3380-0348 | Vertical hinged heavy duty swing-out toolboard. Location: L2. Hinge along forward compartment wall and position 14" off back wall. Includes D-Ring latch to secure in the closed position that is accessible from the ground. Hinge made from 1/2" stainless steel rod and stainless steel plate with flanged bearing top and bottom. | 1812 |
| 3380-0350 | PAC TRAC panels vertical stacked with tool mounting grooves orientated horizontal on forward rearward and back walls of compartment L5 upper and lower. | 1094 |
| 3380-0358 | PAC TRAC panels vertical stacked with tool mounting grooves orientated horizontal on forward and rearward side walls of compartment R2. | 600 |
| 3380-0359 | PAC TRAC panels vertical stacked with tool mounting grooves orientated horizontal on forward and rearward side walls of compartment L1. | 600 |
| 3380-0360 | Tray modification to the slide-out tray in R3 compartment. The side of tray that is at R3 opening to hinge down and lock with a pin on each end in the upright position. | 224 |
| 3380-0361 | Adjustable heavy duty tool pegboard with 500 lbs. capacity. Includes return style reinforcing bends on vertical front and rear edges of tool board upper and lower adjustable track and gas shock actuated. Tool board sized to compartment height and depth as applicable. Upper end to be notched around compartment offset to provide maximum height. Relocate upper slide as applicable for maximum extension of toolboard. Location(s): [#LOC]. | 1237 |
| 3380-0362 | Adjustable mounted Hansen roll-out/tilt-down tray. Location(s): [#LOC] For use in single depth or rescue style compartments. | 1580 |
| 3380-0363 | Left side running board SS hose tray with Duradek flooring. Well to store minimum 25' of 5" hose. | 606 |
| 3380-0364 | Adjustable roll-out tray with 500 lbs. capacity. Tray to have 4" lips. Location(s): [#LOC]. | 1381 |
| 3380-0366 | Vertical hinged swing-out Pegboard tool board adjustable in and out. Location: R3. Hinge along rearward compartment wall. Includes single point D-ring latch to secure in the closed position that is accessible from the ground. | 1870 |
| 3380-0377 | Adjustable heavy duty two sided tool board rated at 500 lbs. capacity with dual side pockets. Includes return style reinforcing bends on vertical front and rear edges of tool board and boxed in design upper and lower adjustable track and gas shock actuated. Shall be equipped with (2) pockets (1) one mounted to bottom on forward facing surface approx. 10" x 10" by as long as tool board will allow and (1) one mounted to bottom rearward facing surface approx. 5" x 10" by as long as tool board will allow. Tool board sized to compartment height and depth as applicable. Location: L5 compartment. | 1399 |
| 3380-0379 | Floor mounted Bi-Directional Slide Master with tray. Model SM2-D-SP. Mounted inside cab medical cabinet. The tray shall be made as wide as possible. Options like rear wall cab heaters etc will reduce the width of the tray. | 2060 |
| 3380-0380 | Vertical hinged swing-out toolboard adjustable in and out. Location: L2. Hinge along forward compartment wall. Includes latch to secure in the closed position that is accessible from the ground. Hinge made from 1/2" stainless steel rod and stainless steel plate with flanged bearing top and bottom. | 1726 |
| 3380-0381 | Tool board(s) to have a hand hold cutout on each outboard edge. | 284 |

| Item No. | Description | |
|---|---|---|
| 3380-0383 | Tray floor mounted roll-out with gas spring and "Hansen" slides. 500 lbs. capacity. Location: [#LOC]. | 1206 |
| 3380-0384 | Tray with 6" sides floor mounted roll-out with gas spring and "Hansen" slides. 500 lbs. capacity. Location: [#LOC]. | 1332 |
| 3380-0385 | Adjustable mounted roll-out tray with gas spring and "Hansen" slides. 500 lbs tray capacity. Location(s): [#LOC] | 1762 |
| 3380-0386 | Pac Trac Dual Vertical hinged swing-out toolboards PM-1000 adjustable in and out. Location: [#LOC]. Hinge (1) forward and (1) rearward compartment walls. Includes latch to secure in the closed position that is accessible from the ground. | 3566 |
| **PUMP AND PLUMBING** | | 0 |
| 4000-0036 | Stainless Steel Victaulic couplings for all discharge and intake plumbing. | 4626 |
| 4005-0007 | Hale Centrifugal Booster PTO Pump - 2 Stage | 18669 |
| 4005-0013 | Hale QFLO 750-1250 GPM pump single stage. | 25964 |
| 4005-0014 | Hale QMID 1250 GPM single stage Pump | 34993 |
| 4005-0015 | Hale QMAX 1000-1250 GPM single stage Pump | 31228 |
| 4005-0016 | Hale QMAX 1000-2250 GPM single stage pump. | 31228 |
| 4005-0017 | Hale QTWO 1000-1250 GPM two stage Pump | 39443 |
| 4005-0018 | Hale QTWO 1500-2000 GPM two stage pump. | 40496 |
| 4005-0019 | Waterous CS 750-1250 single stage pump. | 27260 |
| 4005-0020 | Waterous CM 750-1250 two stage Pump | 31310 |
| 4005-0021 | Waterous CSU 1500-2250 GPM single stage pump. | 30921 |
| 4005-0022 | Waterous CMU 1500-2250 GPM two stage pump. | 46930 |
| 4005-0023 | Waterous S100 2000 GPM Pump for RLP | 41881 |
| 4005-0024 | Hale RSD (1500 GPM) single stage RGA gear box driven pump. For use with rear mount pump body. | 33522 |
| 4005-0036 | Extended Hale Pump 1 Year Warranty in addition to the standard 2 year warranty. | 815 |
| 4005-0037 | Extended Hale Pump 2 Year Warranty in addition to the standard 2 year warranty. | 1566 |
| 4005-0038 | Extended Hale Pump 3 Year Warranty in addition to the standard 2 year warranty. | 2316 |
| 4005-0039 | Extended Waterous Pump 3 Year Warranty in addition to the standard 2 year warranty. | 1969 |
| 4005-0040 | Pump Portable 500 GPM Hale w/4" Tank-to-pump. Location [#LOC] | 25009 |
| 4005-0041 | Test pump with 6" steamers and switch to 4.5" steamers afters test. | 197 |
| 4005-0044 | Rating 3000 GPM Industrial | 3064 |
| 4005-0052 | Hale QMAX 1500-2250 GPM single stage pump with K Gear Box | 32433 |
| 4005-0057 | Hale DSD Pump 750/1500 GPM single stage | 35284 |
| 4005-0060 | Hale HPX300 BD26 Hale Portable Pump mounted in pan. W/Remote controls in Cab. Hook up to Chassis Fuel System. | 22796 |
| 4005-0061 | Hale AP 500 MGA T-Case Driven single stage Pump. | 23688 |
| 4005-0062 | Waterous S100D (1500 GPM) single stage pump. For use with rear mount pump body. | 43754 |
| 4005-0063 | Hale QFLO Plus 750-1250 GPM Pump single stage | 48027 |
| 4005-0081 | Hale RSD single stage PTO driven pump. For use with rear mount pump body and mid-ship engine applications. | 23274 |
| 4005-0085 | Hale QMAX-21L 1750 pump. Tradition. | 27790 |
| 4005-0086 | Hale RSD/RGA single stage pump. For use with rear mount pump body. | 33557 |
| 4005-0087 | Waterous S100D/TC20 single stage pump. For use with rear mount pump body. | 31982 |
| 4005-0098 | Waterous Pump TPP-5 Extended Warranty. | 1969 |
| 4005-0099 | Hale Pump Pro-Tech Extended 3 Year Warranty in addition to the standard 2 year warranty. | 2227 |
| 4005-0100 | Hale AP50 PTO driven pump. Includes driver side 5" intake with cap (shipped loose). Capacity of 500GPM/1892LPM | 14486 |
| 4005-0101 | Hale MBP PTO driven pump. Includes driver side 6" intake with cap (shipped loose). Capacity of 750GPM/2839LPM. | 19443 |
| 4005-0102 | Hale MBP PTO driven pump. Includes driver side 6" intake with cap (shipped loose). Capacity of 1000GPM/3785LPM. | 19443 |
| 4005-0122 | Waterous CSU 1500-2250 GPM single stage Pump. Shall include the Endurance CSC20 Waterous C20 transmission. | 43278 |
| 4005-0131 | E-ONE 1250-1500 GPM pump single stage. | 39559 |
| 4005-0132 | Hale AP 500 RGA T-Case Driven single stage Pump. | 23688 |
| 4005-0138 | Hale QMAX 1000-2250 GPM single stage pump. | 40857 |
| 4005-0143 | Hale DSD Pump 750/1500 GPM single stage | 25446 |
| 4005-0147 | E-ONE 1250-1500GPM PTO pump single stage. | 39564 |
| 4005-0150 | Hale MG Pump 500/1000 GPM single stage | 24602 |
| 4005-0152 | Hale MG Pump 500/1000 GPM single stage | 20816 |
| 4005-0154 | Hale QMAX-XS 1250-2250 GPM single stage pump. | 32310 |
| 4005-0155 | Hale RME/RGA 3000gpm Pump for Rear Mount with (3) 6" Inlets. | 44314 |
| 4005-0169 | Hale QMAX-XS R 1250-2250 GPM single stage pump. (R GEAR BOX) | 33011 |
| 4005-0171 | Waterous CXVK 750-1250 single stage PTO Pump. | 27152 |
| 4005-0172 | Waterous CS 750-1250 single stage pump. (With gear box to front IPOS) | 31125 |

| Item No. | Description | |
|---|---|---|
| 4005-0180 | E-ONE 1250-1500 GPM pump single stage for use with Hush chassis. | 38602 |
| 4005-0182 | Waterous CXVK 1250 GPM single stage pump with 150CFM CAFS | 72846 |
| 4005-0184 | Waterous CXS-C20C 1250-1500 GPM single stage pump for eMax configurations. | 40962 |
| 4005-0185 | Hale CBP 250 GPM PTO pump. | 11493 |
| 4005-0187 | Hale APMG50 Pump 500GPM single stage. | 18089 |
| 4005-0190 | Darley 1.5 AGH single stage hydraulically driven centrifugal pump. | 13575 |
| 4005-0195 | Hale QFLO 750-1250 GPM pump single stage. Requires primer option. | 22664 |
| 4005-0196 | Hale QMAX 1000-2250 GPM single stage pump. Requires primer option. | 27928 |
| 4005-0197 | Hale QTWO 1500-2000 GPM two stage pump. Requires primer option. | 37196 |
| 4005-0200 | Waterous CS 750-1250 single stage pump. Requires primer option. | 23906 |
| 4005-0201 | Waterous CSU 1500-2250 GPM single stage pump. Requires primer option. | 27568 |
| 4005-0202 | Waterous CMU 1500-2250 GPM two stage pump. Requires primer option. | 43576 |
| 4005-0204 | E-ONE 1250-1500 GPM pump single stage. Requires primer option. | 36370 |
| 4005-0205 | E-ONE 1250-1500GPM PTO pump single stage. Requires primer option. | 36375 |
| 4005-0206 | E-ONE 1250-1500 GPM pump single stage for use with HS chassis. Requires primer option. | 35413 |
| 4005-0208 | Hale AP50 PTO driven pump. Includes driver side 5" intake with cap (shipped loose). Capacity of 500GPM/1892LPM. Requires primer option. | 12075 |
| 4005-0209 | Hale MBP PTO driven pump. Includes driver side 6" intake with cap (shipped loose). Capacity of 750GPM/2839LPM. Requires primer option. | 17032 |
| 4005-0210 | Hale MBP PTO driven pump. Includes driver side 6" intake with cap (shipped loose). Capacity of 1000GPM/3785LPM. Requires primer option. | 17032 |
| 4005-0211 | Hale RSD/RGA single stage pump. For use with rear mount pump body. Requires primer option. | 30257 |
| 4005-0212 | Waterous S100D/TC20 single stage pump. For use with rear mount pump body. Requires primer option. | 28628 |
| 4005-0215 | Waterous CXS-C20C 1250-1500 GPM single stage pump for eMAX configurations. Requires primer option. | 37608 |
| 4010-0159 | Fill tower locations. The water and foam fill towers shall be relocated so they are centered left to right about the apparatus after the tanks have been loaded. | 330 |
| 4010-0174 | 530 Gallon "T" Water Tank. UPF Poly III color fill towers. Note: Any foam cell(s) will reduce the overall water capacity. | 6348 |
| 4010-0175 | 530 Gallon "R" Water Tank UPF Poly III color fill towers. Note: Any foam cell(s) will reduce the overall water capacity. | 5811 |
| 4010-0176 | 780 Gallon "T" Water Tank. UPF Poly III color fill towers. Note: Any foam cell(s) and/or storage options through the tank will reduce the overall water capacity. | 7028 |
| 4010-0177 | 780 Gallon "R" Water Tank. UPF Poly III color fill towers. Note: Any foam cell(s) and/or storage options through the tank will reduce the overall water capacity. | 6944 |
| 4010-0178 | 1030 Gallon "T" Water Tank. UPF Poly III color fill towers. Note: Any foam cell(s) and/or storage options through the tank will reduce the overall water capacity. | 8750 |
| 4010-0179 | 1030 Gallon "R" Water Tank. UPF Poly III color fill towers. Note: Any foam cell(s) and/or storage options through the tank will reduce the overall water capacity. | 8453 |
| 4010-0180 | 1280 Gallon "T" Water Tank. UPF Poly III color fill towers. Note: Any foam cell(s) and/or storage options through the tank will reduce the overall water capacity. | 11184 |
| 4010-0181 | 1280 Gallon "R" Water Tank. UPF Poly III color fill towers. Note: Any foam cell(s) and/or storage options through the tank will reduce the overall water capacity. | 10512 |
| 4010-0182 | 1530 Gallon "T" Water Tank. UPF Poly III color fill towers. Note: Any foam cell(s) and/or storage options through the tank will reduce the overall water capacity. | 13433 |
| 4010-0183 | 530 Gallon "L" shaped Water Tank. UPF Poly III color fill towers. Includes lowered rear section for lower hose bed height. Note: Any foam cell(s) optioned will reduce the overall water capacity. | 9361 |
| 4010-0184 | 780 Gallon "L" shape Water Tank. UPF Poly III color fill towers. Includes lowered rear section for lower hose bed height. Note: Any foam cell(s) optioned will reduce the overall water capacity. | 10042 |
| 4010-0185 | 1030 Gallon "L" shape Water Tank. Includes lowered rear section for lower hose bed height. Note: Any foam cell(s) optioned will reduce the overall water capacity. UPF Poly III color fill towers. | 12424 |
| 4010-0189 | 1530 Gallon "T" Water Tank. UPF Poly III color fill towers - tanker version. Note: Any foam cell(s) and/or storage options thru the tank will reduce the overall water capacity. | 11941 |
| 4010-0190 | 1830 Gallon "T" Water Tank. UPF Poly III color fill towers. Note: Any foam cell(s) and/or storage options thru the tank will reduce the overall water capacity. | 14196 |
| 4010-0191 | 2030 Gallon "T" Water Tank. UPF Poly III color fill towers. Note: Any foam cell(s) and/or storage options thru the tank will reduce the overall water capacity. | 15700 |
| 4010-0192 | 2030 Gallon Tandem "T" Water Tank. UPF Poly III color fill towers. Note: Any foam cell(s) and/or storage options thru the tank will reduce the overall water capacity. | 17202 |
| 4010-0193 | 2530 Gallon Tandem "T" Water Tank. UPF Poly III color fill towers. Note: Any foam cell(s) and/or storage options thru the tank will reduce the overall water capacity. | 21438 |
| 4010-0194 | 3030 Gallon Tandem "T" Water Tank. UPF Poly III color fill towers. Note: Any foam cell(s) and/or storage options thru the tank will reduce the overall water capacity. | 25674 |

| Item No. | Description | |
|---|---|---|
| 4010-0211 | 2900 Gallon Tandem "T" Water Tank. UPF Poly III color fill towers. Note: Any foam cell(s) and/or storage options thru the tank will reduce the overall water capacity. Tank capacity is 2900 US gallons / 2414 Imperial gallons / 10977 Liters. | 24573 |
| 4010-0212 | 780 Gallon "R" Water Tank for 4x4 chassis. UPF Poly III with color fill towers. Note: Any foam cell(s) and/or storage options thru the tank will reduce the overall water capacity. Tank capacity is 780 US gallon / 649 Imperial gallons / 2952 Liters. Includes modifications for 4x4 and plumbing applications as required. | 8678 |
| 4010-0213 | 530 Gallon "L" shaped Water Tank UPF Poly III color fill towers. Includes lowered rear section for lower hose bed height. Note: Any foam cell(s) optioned will reduce the overall water capacity. Tank capacity is 530 US gallon / 441 Imperial gallons / 2006 Liters. | 9361 |
| 4010-0214 | 1030 Gallon "T" Water Tank. UPF Poly III color fill towers. Note: Any foam cell(s) and/or storage options through the tank will reduce the overall water capacity. Tank capacity is 1030 US gallons / 857 Imperial gallons / 3898 Liters. Includes modifications for 4x4 and plumbing applications as required. | 10937 |
| 4010-0217 | 550 Gallon "R" Water Tank UPF Poly III color fill towers. Note: Any foam cell(s) will reduce the overall water capacity. | 6217 |
| 4010-0222 | 730 Gallon "R" Water Tank. UPF Poly III color fill towers. Note: Any foam cell(s) and/or storage options thru the tank will reduce the overall water capacity. Tank capacity is 730 US gallon / 608 Imperial gallons / 2766 Liters. | 6689 |
| 4010-0225 | 1060 Gallon "R" Water Tank. UPF Poly III color fill towers. Note: Any foam cell(s) and/or storage options through the tank will reduce the overall water capacity. | 8699 |
| 4010-0226 | 1030 Gallon Combo "T" Water Tank. 280 gallons water UPF Poly III blue color fill tower / 750 foam class B UPF Poly III yellow fill tower . Water tank capacity is 280 US gallons / 233 Imperial gallons / 1060 Liters. Foam tank capacity is 750 US gallons / 624 Imperial gallons / 2839 Liters. | 13263 |
| 4010-0231 | 500 Gallon "R" Water Tank UPF Poly III color fill towers. Note: Any foam cell(s) will reduce the overall water capacity. | 5811 |
| 4010-0232 | 830 Gallon" L" shape Water Tank. Includes lowered rear section for lower hosebed height. Note: Any foam cell(s) optioned will reduce the overall water capacity. Tank capacity is 830 US gallons / 691 Imperial gallons / 3141 Liters. Upper section recessed area for ladders/pikepoles driver side and tubes on officer side for (2) hard suction. | 12180 |
| 4010-0233 | 3530 Gallon Tandem "T" Water Tank. UPF Poly III color fill towers. Note: Any foam cell(s) and/or storage options thru the tank will reduce the overall water capacity. | 28614 |
| 4010-0237 | 590 Gallon "R" Water Tank. UPF Poly III color fill towers. Note: Any foam cell(s) and/or storage options through the tank will reduce the overall water capacity. | 5838 |
| 4010-0238 | 880 Gallon "L" shape Water Tank. UPF Poly III color fill towers. Includes lowered rear section for lower hose bed height. Note: Any foam cell(s) optioned will reduce the overall water capacity. | 10042 |
| 4010-0246 | Fill tower locations. Water fill tower to be located driver side of hosebed the Foam "A" centered and Foam "B" fill tower to be located to officer side of hosebed. | 330 |
| 4010-0247 | 720 Gallon "T" Water Tank. UPF Poly III color fill towers. Note: Any foam cell(s) and/or storage options through the tank will reduce the overall water capacity. | 6282 |
| 4010-0248 | 560 Gallon "T" Water Tank. UPF Poly III color fill towers. Note: Any foam cell(s) and/or storage options through the tank will reduce the overall water capacity. | 5329 |
| 4010-0249 | 720 Gallon "T" Water Tank. UPF Poly III color fill towers. Note: Any foam cell(s) and/or storage options through the tank will reduce the overall water capacity. Includes modifications for 4x4 and plumbing applications as required. | 6282 |
| 4010-0250 | 1040 Gallon "R" Water Tank. UPF Poly III color fill towers. Note: Any foam cell(s) and/or storage options through the tank will reduce the overall water capacity. | 8488 |
| 4010-0252 | 800 Gallon "L" shape Water Tank. UPF Poly III color fill towers. Includes lowered rear section for lower hose bed height. Note: Any foam cell(s) optioned will reduce the overall water capacity. | 9790 |
| 4010-0255 | 1250 Gallon "T" Water Tank. UPF Poly III color fill towers. Note: Any foam cell(s) and/or storage options through the tank will reduce the overall water capacity. | 11184 |
| 4010-0257 | 780 Gallon "T" Water Tank (no "T" section to officer side of tank). UPF Poly III color fill towers. Note: Any foam cell(s) and/or storage options thru the tank will reduce the overall water capacity. Tank capacity is 780 US gallons / 649 Imperial gallons / 2952 Liters. | 7632 |
| 4010-0258 | Fill tower locations. The water and foam fill towers shall be relocated so they are centered left to right about the apparatus after the tank has been loaded. Fill towers are to be no more than 4" above top of body sides. | 330 |
| 4010-0259 | 950 Gallon "T" Water Tank. Includes lowered upper "T" for lower hosebed height and a large Officer's side ladder compartment tank notch upper/fwd area. | 12770 |
| 4010-0260 | Fill tower locations. The water and foam fill towers shall be re-located in the center of the hose bed pan. | 330 |
| 4010-0261 | 750 Gallon "T" Water Tank. UPF Poly III color fill towers. Note: Any foam cell(s) will reduce the overall water capacity. | 6655 |
| 4010-0262 | 1030 Gallon half "T" Water Tank (no "T" section to officer side of tank). UPF Poly III color fill towers. Note: Any foam cell(s) and/or storage options through the tank will reduce the overall water capacity. | 9459 |

| Item No. | Description | |
|---|---|---|
| 4010-0266 | 1250 Gallon "R" Water Tank. UPF Poly III color fill towers. Note: Any foam cell(s) and/or storage options through the tank will reduce the overall water capacity. | 10512 |
| 4010-0267 | 750 Gallon "R" Water Tank. UPF Poly III color fill towers. Note: Any foam cell(s) and/or storage options through the tank will reduce the overall water capacity. | 6944 |
| 4010-0271 | 530 Gallon half "T" Water Tank (no "T" section to drivers side of tank). UPF Poly III color fill towers. Note: Any foam cell(s) and/or storage options through the tank will reduce the overall water capacity. | 6348 |
| 4010-0274 | 1750 Gallon "T" Water Tank. UPF Poly III color fill towers. Note: total available tank capcity to be 1750 U.S. Gallons (Water or water/foam should foams cells be added). | 15700 |
| 4010-0276 | 750 Gallon "R" Water Tank. UPF Poly III color fill towers. Note: Any foam cell(s) and/or storage options through the tank will reduce the overall water capacity. | 6944 |
| 4010-0278 | Water tank overflow pipe upgrade to 6" ILO of standard. Requires a 14" x 14" fill tower. | 298 |
| 4010-0280 | 560 Gallon "L" shaped Water Tank. UPF Poly III color fill towers. Includes lowered rear section for lower hose bed height. Note: Any foam cell(s) optioned will reduce the overall water capacity. | 9890 |
| 4010-0283 | 630 Gallon "R" Water Tank. UPF Poly III color fill towers. Note: Any foam cell(s) will reduce the overall water capacity. | 6889 |
| 4010-0284 | 970 Gallon "L" shape Water Tank. Includes lowered rear section for lower hose bed height. Note: Any foam cell(s) optioned will reduce the overall water capacity. UPF Poly III color fill towers. Tank capacity is 970 US gallon / 807 Imperial gallons / 3671 Liters. | 12424 |
| 4010-0287 | Fill tower locations. Water fill tower to be located officer side of hosebed Foam "B" fill tower to be inboard of the Class "A" and Foam "A" fill tower to be located to driver side of hosebed. | 330 |
| 4010-0288 | 600 Gallon "L" shape Water Tank. UPF Poly III color fill towers. Includes lowered rear section for lower hose bed height. Note: Any foam cell(s) optioned will reduce the overall water capacity. | 9361 |
| 4010-0290 | 1850 Gallon "T" Water Tank. UPF Poly III color fill towers. Note: Any foam cell(s) and/or storage options thru the tank will reduce the overall water capacity.Tank capacity is 1850 US gallons / 1540 Imperial gallons / 7003 Liters. | 14196 |
| 4010-0292 | All Exterior Poly Tank (Wet) Wall to be of 1" thick material including top sides and floor. Internal baffel and plate work will be at tank manufacturers discresion. Total tank capacity to be maintained. | 548 |
| 4010-0294 | 750 Gallon "L" shape Water Tank. UPF Poly III color fill towers. Includes lowered rear section for lower hosebed height. Note: Any foam cell(s) optioned will reduce the overall water capacity. | 10042 |
| 4010-0296 | 530 Gallon "T" Water Tank (no "T" section to officer side of tank). UPF Poly III color fill towers. Note: Any foam cell(s) will reduce the overall water capacity. | 6952 |
| 4010-0298 | 1530 Gallon "R" Water Tank. UPF Poly III color fill towers. Note: Any foam cell(s) and/or storage options through the tank will reduce the overall water capacity. Tank capacity is 1530 US gallon / 1273 Imperial gallons. | 12565 |
| 4010-0299 | 600 Gallon "T" Water Tank (no "T" section to officer side of tank). UPF Poly III color fill towers. Note: Any foam cell(s) and/or storage options thru the tank will reduce the overall water capacity. Tank capacity is 600 US gallons / 499 Imperial gallons / 2271 Liters. | 7791 |
| 4010-0301 | 500 Gallon "L" shaped Water Tank. UPF Poly III color fill towers. Includes lowered rear section for lower hose bed height. Note: Any foam cell(s) optioned will reduce the overall water capacity. | 9667 |
| 4010-0303 | 530 Gallon "T" Water Tank (no "T" section to driver side of tank). UPF Poly III color fill towers. Note: Any foam cell(s) will reduce the overall water capacity. | 6952 |
| 4010-0305 | Fill tower locations. Water and Foam "A" fill towers to be located driver side of hosebed and Foam "B" fill tower to be located center of the hosebed. | 330 |
| 4010-0306 | 810 Gallon "L" shape Water Tank. UPF Poly III color fill towers. Includes lowered rear section for lower hose bed height. Note: Any foam cell(s) optioned will reduce the overall water capacity. | 10429 |
| 4010-0307 | 780 Gallon 1/2 "T" Water Tank (no "T" section to driver's side of tank). UPF Poly III color fill towers. Note: Any foam cell(s) and/or storage options thru the tank will reduce the overall water capacity. Tank capacity is 780 US gallons / 649 Imperial gallons / 2952 Liters. | 7632 |
| 4010-0308 | 1930 Gallon "T" Water Tank. UPF Poly III color fill towers. Note: Any foam cell(s) and/or storage options thru the tank will reduce the overall water capacity. | 14948 |
| 4010-0309 | 950 Gallon "T" Water Tank. UPF Poly III color fill towers. Note: Any foam cell(s) and/or storage options through the tank will reduce the overall water capacity. | 9106 |
| 4010-0310 | 3500 Gallon Tandem "T" Water Tank. UPF Poly III color fill towers. Note: Any foam cell(s) and/or storage options thru the tank will reduce the overall water capacity. | 28614 |
| 4010-0315 | 1200 Gallon "R" Water Tank. UPF Poly III color fill towers. Note: Any foam cell(s) and/or storage options through the tank will reduce the overall water capacity. | 10512 |
| 4010-0321 | 1230 Gallon "R" Water Tank. UPF Poly III color fill towers. Note: Any foam cell(s) and/or storage options through the tank will reduce the overall water capacity. | 10512 |
| 4010-0322 | 590 Gallon "L" shaped Water Tank. UPF Poly III color fill towers. Includes lowered rear section for lower hose bed height. Note: Any foam cell(s) optioned will reduce the overall water capacity. | 9991 |
| 4010-0325 | 1230 Gallon "R" Water Tank. UPF Poly III color fill towers. Note: Any foam cell(s) and/or storage options through the tank will reduce the overall water capacity. | 10512 |
| 4015-0002 | Mechanical speed counter for Hale pumps. | 355 |
| 4015-0007 | Pump cooler 1/4" valve with 3/8" tubing. | 187 |

| Item No. | Description | |
|---|---|---|
| 4015-0008 | Zinc anodes for Hale pump (PR) (1) discharge side and (1) intake side. | 358 |
| 4015-0012 | Pump shift override side panel mounted. | 824 |
| 4015-0013 | Fire Research ThrottleXcel engine throttle. Includes engine gauges. | 1761 |
| 4015-0014 | Thermal Relief Valve - Hale TRV120. | 921 |
| 4015-0015 | Valve relief system Hale TPM. | 4118 |
| 4015-0016 | Thermal relief valve Hale TRVL-120. | 1668 |
| 4015-0018 | Valve Inlet MIV-E - Hale. Location: [#LOC]. | 3812 |
| 4015-0019 | Valve inlet MIV-M Hale. Location: [#LOC]. | 3270 |
| 4015-0020 | Valve Monarch Manual - Waterous. Location: [#LOC]. | 5595 |
| 4015-0021 | Valve Monarch Air Actuated - Waterous. Location: [#LOC] | 6070 |
| 4015-0022 | Mechanical pump seal - Hale. | 842 |
| 4015-0026 | Electronic speed counter for Waterous pumps. | 351 |
| 4015-0027 | Pump Shift Override Under L1 Compartment. | 824 |
| 4015-0029 | Hale pressure relief valve. | 1445 |
| 4015-0030 | Waterous pressure relief valve. | 1614 |
| 4015-0031 | Valve Relief System - Dual TPM Required for pump rating 2250 GPM and above. | 4873 |
| 4015-0033 | Hale 2-Stage Power Operated Transfer Valve. | 1912 |
| 4015-0035 | Waterous 2-Stage electronic transfer valve. | 1615 |
| 4015-0036 | 6" Additional Intake for 2250 GPM Pump. | 2205 |
| 4015-0037 | Engine throttle vernier. | 402 |
| 4015-0039 | Pump seal mechanical for Waterous pump. | 793 |
| 4015-0041 | Valve Monarch Electric - Waterous. Location: [#LOC]. | 6213 |
| 4015-0042 | Waterous Overheat Protection Manager. | 1188 |
| 4015-0043 | Anodes for Hale CAFSPRO Pump (Pair) (1) Discharge side and (2) Intake Side. | 538 |
| 4015-0044 | Anodes for Waterous pump - (Pair) (1) discharge side and (1) intake side. | 435 |
| 4015-0045 | Throttle Selection Switch on Pump Operator's Panel for Back-Up of Relief and Throttle System. | 610 |
| 4015-0046 | Hale pump shift override. | 1314 |
| 4015-0047 | Additional Hale Primer Valve. Located: [#LOC]. | 675 |
| 4015-0048 | Pump Shift Override - driver's side under running board forward of running board tray if applicable. | 824 |
| 4015-0049 | Extend Fire Pump Grease Zerks to Operator's Panel | 475 |
| 4015-0050 | Relocate Primer to the Outside of the Frame Rail on Driver's Side | 105 |
| 4015-0051 | Two 4.5" Steamers for Hale Qflo Pump | 841 |
| 4015-0054 | Additional Waterous Primer. Located: [#LOC]. | 1513 |
| 4015-0056 | Air operated master pump drain (upgrade). | 246 |
| 4015-0057 | Special controls and regulator requirements for Seattle. Install RV-1 (Pressure Regulating Valve) going to pump shift to allow a max of 60 PSI on pump. | 460 |
| 4015-0058 | Engine shut-down switch on pump panel. Includes coverered access. | 374 |
| 4015-0062 | Primer indicator light shall be provided on the pump operator's panel color to be red. | 129 |
| 4015-0063 | TPM Relief Valve outlet to be extended to the side of truck under runningboard or compartment. | 318 |
| 4015-0064 | Hale Auto Fill/Thief Inlet 2.5" Tank Fill "AutoFill" Automatic Tank Fill Valve Location: [#LOC]. | 4853 |
| 4015-0065 | Schedule 40 stainless steel piping. | 1342 |
| 4015-0066 | Trident Pump Primer W/3 Barrel Push Button Control. (In addition to standard.) | 1200 |
| 4015-0068 | 6" intake valve Akron electric with relief. Location: [#LOC]. | 4047 |
| 4015-0069 | MIV's Pressure Relief and Atmospheric Relief (intake relief) to be plumbed to top of heat pan. | 172 |
| 4015-0070 | WATEROUS OIL PRIMER | 81 |
| 4015-0071 | Valve Relief Thermal - Hale TRVL-120 W/Audible Alarm | 1683 |
| 4015-0074 | Manual remote operated master pump drain. The master drain control shall be clearly marked and placed in accessible location on driver side pump panel. | 360 |
| 4015-0075 | Pump Seal Mechanical - Hale. For use with Tradition Hale pumps. | 2612 |
| 4015-0080 | 6" Cap Vented "IPOS" | 20 |
| 4015-0081 | Hale Semi-Automatic Priming push-button control. | 562 |
| 4015-0082 | Electric Over Air Actuation Pump Cooler Valve | 488 |
| 4015-0083 | Electric Over Air Actuation Engine Cooler Valve | 314 |
| 4015-0084 | Pump Air Blow Out with 1/4" Snubber Valve. | 280 |
| 4015-0085 | Auto Tank to Pump Operation. When Switched to Automatic Mode The Tank Valve will Close When Suction Pressure Reaches 15 PSI & Opens When Suction PressureI Drops Below 15 PSI. | 2062 |
| 4015-0086 | Pump Cooler 1/4 Turn 3/8" Valve | 294 |
| 4015-0087 | Engine Cooler 1/4 Turn 3/8" Valve | 294 |
| 4015-0088 | Portable/Qmax Pump Shall be with Manifold and check valves for Front Bumper Turret and Ground Sweep. To be use dearing Pump&Roll operation. | 1007 |
| 4015-0089 | Extend exhaust pipe from dunnage pan mounted portable pump in line with main exhaust system using stainless steel flexible pipe. | 133 |
| 4015-0090 | Akron Test Port for Master Gauges | 107 |
| 4015-0091 | Pump cooler with .75" 1/4 turn valve. | 333 |
| 4015-0092 | Hale Fill Thieft Steamers to be Flush + 2 Location [#LOC] | 1782 |

| Item No. | Description | |
|---|---|---|
| 4015-0109 | Galvanized Victaulic Coupling. All Victaulic couplings shall galvanized. | 244 |
| 4015-0111 | Ferrell Compression Fittings for all Plastic Tubing in the Pump module plumbing. | 746 |
| 4015-0125 | Red Switch Cover on Master Drain Switch. | 16 |
| 4015-0126 | Hale PTO/MIDSHIP 250GPM to 1000gpm Pump Pressure Relief Valve | 2553 |
| 4015-0127 | Fire Research Infinity vernier type engine throttle. | 772 |
| 4015-0129 | Waterous Overheat Protection Manager with audible alarm. | 1116 |
| 4015-0130 | Additional Trident Primer Valve Located: [#LOC]. Requires aux air tank if connected to front or rear intake. | 405 |
| 4015-0131 | Hale Anode Pro Kit (3) Anodes with Flange. One on each suction tube and one anode on the discharge located as close to the center of the pump as possible. | 1259 |
| 4015-0133 | Anode for Darley pump - (1) intake side. | 468 |
| 4015-0134 | Class 1 Engine Twister throttle vernier | 975 |
| 4015-0135 | Mechanical speed counter for pumps. | 432 |
| 4015-0138 | 6" Inlet Valve Manual Gear Operated with Relief. Location: [#LOC]. | 3299 |
| 4015-0139 | Darley Pump Overheat Thermal relief valve shall be provided with a light located on pump operator's panel. | 839 |
| 4015-0144 | Manual remote operated master pump drain. The master drain control shall be clearly marked and placed in accessible location rearward below running board on driver side or L1 compartment. | 360 |
| 4015-0150 | Darley pump shift override. | 824 |
| 4015-0152 | Hale pump shift override. Pump shift to be recess behind pump operator pump panel with door. | 1597 |
| 4015-0157 | Waterous 2-Stage Electric Transfer Valve Manual Override locate drive side pump panel. | 303 |
| 4015-0159 | Valve Inlet MIV-E - Hale. Location: [#LOC]. | 3812 |
| 4015-0160 | Pump Shift Override Under R1 Compartment | 824 |
| 4015-0163 | Customer supply existing midship pump shall be reused on new chassis. | 7305 |
| 4015-0164 | Factory Pump Test. | 524 |
| 4015-0166 | Pump cooler automatic with 3/8" tubing. Include a check valve that is install between the pump discharge and tank that will automatically close when drafting. | 161 |
| 4015-0172 | Primer indicator light shall be provided on the pump operator's panel color to be red. The indicator light shall be upgraded to a LED indicator light IPOS. | 195 |
| 4015-0175 | Additional control and air bleeder for the MIV-E to provide controls at: [#LOC]. | 614 |
| 4015-0177 | Additional Anode for Darley pump. Location: Discharge side of pump. | 468 |
| 4015-0178 | Anodes for Waterous pump - (Three) (1) discharge side (1) intake side and (1) inside of tank. | 655 |
| 4015-0179 | Waterous Monarch Electric valve manual override control located on pump panel same side as Waterous intake valve is. | 435 |
| 4015-0180 | 6" Intake Akron Electric Valve and 9323 Controller with relief. Location: [#LOC]. | 4047 |
| 4015-0181 | Pump cooler with .75" 1/4 lift lever turn valve. | 333 |
| 4015-0182 | Engine cooler with .75" 1/4 lift lever turn valve. | 333 |
| 4015-0183 | Test Port 1/4"  Drain Valve. | 89 |
| 4015-0186 | Trident Pump Primer W/3 Barrel Push Button Control. (In place of standard primer.)  Requires a 15.6 CFM or larger air compressor. | 232 |
| 4015-0187 | Anodes Pro System for Hale pump (QTY3) (1) discharge side and (2) intake side with one on each side of intake. | 697 |
| 4015-0188 | Red Switch Cover on rear dump valve switches. | 16 |
| 4015-0190 | Remove pump from donor chassis and rebuild Hale QFlow 1250. | 11365 |
| 4015-0191 | Valve Monarch Electric - Waterous. Location:Front Intake with Elkhart Relief valve. | 5440 |
| 4015-0192 | Intake adapter 6" FNST x 6" MNST for pump intake. | 350 |
| 4015-0193 | Hale 3" Auto Fill w/Thief Inlet. Locate: [#LOC]. | 7069 |
| 4015-0194 | Discharge manifold to be Class1 IPOS.  For Dumfries Triangle VFD Only. | 2886 |
| 4015-0197 | Pump cooler with .50" 1/4 turn valve. Include a .50" check valve to prevent back flow of water into the pump if the valve is left open. | 333 |
| 4015-0198 | Front Mounted Pump Gear Box IPOS | 751 |
| 4015-0204 | Trident Manually operated master pump drain. The master drain shall be clearly marked and placed in accessible location on pump panel. | 182 |
| 4015-0209 | Hale Fluid Primer IPOS. | 154 |
| 4015-0210 | Pump cooler with Innovative Control 1/4 turn valve with "T" handle and label. | 180 |
| 4015-0211 | Anodes for Waterous pump - (2) at intake side. | 435 |
| 4015-0212 | Trident Automatic Pump Primer.(In place of standard primer.) | 970 |
| 4015-0214 | Additional Darley Primer Valve. Located: [#LOC]. | 1097 |
| 4015-0215 | 5" Intake Akron Hand Wheel Valve with relief. Location: drive side pump panel | 4661 |
| 4015-0221 | Additional 9323 electric controller for 6" intake electric valve. Location officer side pump panel. Include 1/4" air bleeder. | 1465 |
| 4015-0222 | Waterous "H Manifold" shall be located on the left and right side pump. | 2043 |
| 4015-0224 | Hale Pump Shift Override - driver's side under runningboard forward of runningboard tray. Pump shift to be flush with runingboard when is in gear. | 1314 |
| 4015-0225 | Zinc anodes for Hale pump (3) (2) discharge side and (1) intake side. | 298 |

| Item No. | Description | |
|---|---|---|
| 4015-0231 | Qmax Pump gear box to be "R" IPOS. | 915 |
| 4015-0233 | Throttle Selection Switch on Pump Operator's Panel to be recess with cover. | 627 |
| 4015-0234 | Control for engine cooler. Includes Innovative Controls 1/4 turn valve with "T" handle and label. Requires engine cooler option. | 394 |
| 4015-0235 | Pump Shift Override - driver's side under running board rearward of running board tray if applicable. (Rod linkage in place of cable.) | 1314 |
| 4015-0237 | Trident Automatic Pump Primer w/gauge. IPOS | 1208 |
| 4015-0238 | Hale electric primer (oil-less). | 2411 |
| 4015-0239 | Waterous electric primer (oil-less). | 2464 |
| 4015-0240 | Darley electric primer (oil-less). | 2298 |
| 4015-0241 | Trident primer W/2 barrel push button control. For use with up to 1000 GPM pumps. | 1696 |
| 4015-0242 | Trident primer W/3 barrel push button control. For use with 1250 GPM and larger pumps. Requires 15.6 CFM or large engine air compressor. | 2024 |
| 4015-0248 | Pump Air Blow Out with Innovative Controls 1/4" valve w/1/4 turn handle. | 280 |
| 4015-0249 | Pump cooler Innovative Controls 3/4" include lift lever with ergonomic grip. | 333 |
| 4015-0251 | Zinc anodes for Hale pump (3) (1) discharge side and (2) in intake manifold side. | 298 |
| 4015-0252 | Hale Anode Pro Kit (3) Anodes with Flange. One on each suction tube and one anode on the discharge located as close to the center of the pump as possible. Display monitor location: Pump panel. | 1259 |
| 4015-0253 | Hale Anode Pro Kit (3) Anodes with Flange. One on each suction tube and one anode on the discharge located as close to the center of the pump as possible. Display monitor location: Pump panel. | 1259 |
| 4015-0254 | Flame Plated Impeller Hubs Waterous pump. | 785 |
| 4015-0255 | Pump 6" inlet both side shall be recess to allow room for a Akron 7983 piston valve to fit and not extend out pass the running boards. | 1313 |
| 4015-0256 | Trident Automatic Pump Primer w/gauge. For use with 1250 GPM and larger pumps. Requires 15.6 CFM or large engine air compressor. | 2612 |
| 4015-0257 | Waterous 6" Jamesbury Electric Inlet Valve. Location: [#LOC] | 5873 |
| 4020-0001 | Additional tank sump. | 355 |
| 4020-0002 | Dump Valve Mounting Plate | 654 |
| 4020-0004 | Newton dump mounting plate. | 623 |
| 4020-0005 | Fill Tower(s) to extend 6" above body. | 428 |
| 4020-0006 | Direct 1.0" Water Tank Fill with Akron Valve Terminate with .75 Hose Bib. Location: driver side pump panel | 893 |
| 4020-0007 | 1.5" Tank Drain Akron Manual Valve with pull cable control at left pump panel. Valve shall be located at the tank sump and extend plumbing below frame rail. | 939 |
| 4020-0008 | Water Overflow Pipe to be cut down an additional 3". | 171 |
| 4020-0009 | Water fill tower to have a butterfly latch. | 206 |
| 4020-0012 | Vision Mark tags for water and foam fill towers ipos tags. | 85 |
| 4020-0013 | Sight Level Water Gauge form into front of water tank as a part of the tank. | 226 |
| 4020-0015 | Rear tank dump. Includes painted steel assembly with manually actuated valve on driver side of dump assembly. Includes integral manual extension chute. | 2532 |
| 4020-0016 | Rear tank dump. Includes stainless steel assembly with manual actuated valve on driver side of dump assembly. Includes integral manual extension chute. | 3078 |
| 4020-0017 | Rear tank dump. Includes stainless steel assembly with electical actuated valve and integral manual extension chute. | 3975 |
| 4020-0018 | Rear tank dump. Includes painted steel assembly with manual actuated valve on top of dump assembly. For use with slip on extension and chute. | 1525 |
| 4020-0019 | Rear tank dump. Includes stainless steel assembly with manually actuated valve on top of dump assembly. For use with slip on extension and chute. | 1836 |
| 4020-0020 | Rear tank dump. Includes stainless steel assembly with electrically actuated valve. For use with slip on extension and chute. | 2728 |
| 4020-0021 | Rear tank dump. Includes painted steel assembly with manually actuated valve on top of dump assembly. Includes integral swivel chute with manual telscopic extension. | 3782 |
| 4020-0022 | Rear tank dump. Includes stainless steel assembly with manually actuated valve on top of dump assembly. Includes integral swivel chute with manual extension. | 5474 |
| 4020-0023 | Rear tank dump. Includes mild finish steel assembly with manually actuated valve on driver side of dump assembly. Includes integral electric extension chute. | 3867 |
| 4020-0024 | Rear tank dump. Includes stainless finish steel assembly with electrcially actuated valve. Includes integral manual extension chute. | 4260 |
| 4020-0025 | Rear tank dump. Includes stainless steel assembly with electric actuated valve and integral electrical extension chute. | 5477 |
| 4020-0027 | Slip-on stainless steel dump extension and chute. Includes beavertail mounted removable support arm bracket and tailboard mounted storage tray (directly below dump) with retaining straps. | 1898 |
| 4020-0028 | Slip-on mild finish dump extension and chute. Includes (1) beavertail mounted removable support arm bracket and tailboard mounted storage tray (directly below dump) with retaining straps. | 1466 |

| Item No. | Description | |
|---|---|---|
| 4020-0029 | Driver and officer side tank dumps. Includes stainless steel assembly with electrically actuated valve and integral electrical extension chute. | 9438 |
| 4020-0030 | Driver and officer side tank dumps. Includes painted steel assembly with electically actuated valve and integral electrical extension chute. | 6912 |
| 4020-0031 | Fill Tower(s) to be 24" tall due to the ROM hosebed cover and to be located 27" off front of the tank due to drum of ROM hosebed cover. | 330 |
| 4020-0032 | Dealer supplied dump extension chute and items for storage in or on the body. To be provided by E-ONE will be (1) support arm bracket and (2) mount points on trailing end of beavertails (support arm bracket to be shipped loose). | 275 |
| 4020-0038 | Rear tank dump. Includes mild finish steel assembly with manually actuated valve on top of dump assembly. Includes integral manual extension chute. | 2532 |
| 4020-0039 | Rear tank dump. Includes painted steel assembly with electric actuated valve and integral electric extension chute. | 4033 |
| 4020-0041 | Additional Dump valve/extension switching location in Cab accessible to driver. | 428 |
| 4020-0045 | Notch officer side water tank (overall tank capacity will be reduced for application). Notch to allow for a 2.5" hosebed discharge to be routed into the hosebed on officer side. | 462 |
| 4020-0046 | Notch driver/officer side water tank (overall tank capacity will be reduced for application). Notch to allow for hosebed discharge(s) to be routed into the hosebed. | 462 |
| 4020-0054 | Rear tank dump. Includes painted steel assembly with electric actuated valve on top of dump assembly. Includes integral swivel chute with manual extension. | 5519 |
| 4020-0056 | Tank sleeve for rear or hosebed (low hosebed applications) discharge. | 303 |
| 4020-0059 | Rear tank dump. Includes painted steel assembly with electrically actuated valve. For use with slip on extension and chute. | 2144 |
| 4020-0062 | Water tank fill tower to be approximately 8" tall IPOS. | 196 |
| 4020-0065 | Notch driver side water tank (overall tank capacity will be reduced for application). Notch to allow for a 2.5" hosebed discharge to be routed into the hosebed on driver side. | 462 |
| 4020-0066 | Notch driver side water tank (overall tank capacity will be reduced for application). Notch to allow a booster reel to be mounted in hosebed storage pan. | 462 |
| 4020-0067 | Water Tank Notch for ladder storage above tank for (1) stokes basket. | 646 |
| 4020-0068 | The Newton mounting plate shall be fitted with a stainless steel plate to cap the tank until the dealer supplied dump has been installed. | 303 |
| 4020-0069 | Notch driver side water tank (overall tank capacity will be reduced for application). Notch to allow for (2) 1.5" hosebed discharges to be routed into the hosebed on driver side. | 462 |
| 4020-0070 | Vertical "A" style sleeve thru tank for 50' boom support. | 764 |
| 4020-0072 | Water Tank Notch for HOT SHOT hosebed storage pan. | 245 |
| 4020-0073 | Water tank floor to be 1" thick material ipos 1/2" thick material. | 519 |
| 4020-0074 | Water tank notched at forward top face. Notch along forward top face of tank for cylinders of the electric hosebed cover clearance. | 414 |
| 4020-0075 | 6" overflow pipe IPO 4" over flow pipe. | 638 |
| 4020-0076 | Jet Dump 2" IPO 1.5". | 689 |
| 4020-0082 | Rear tank dump. Includes stainless steel assembly with manually actuated valve on driver side of dump assembly. For use with slip on extension and chute. | 2172 |
| 4020-0084 | 4" Water Tank Overflow piping to be extended below chassis frame rails and piped so as not to discharge over rear springs axle or fuel tank. | 414 |
| 4020-0091 | Water tank notched at top driver side (overall tank capacity will be reduced). Notch along driver side top of tank for 2.5" rear discharge clearance. | 646 |
| 4020-0099 | Tank sleeve for rear discharge(s). | 303 |
| 4030-0041 | Turret bumper Akron Fire Fox ARFF. | 12332 |
| 4030-0046 | TFT Tornado RC Bumper Turret with Joystick. [#LOC]. | 13120 |
| 4030-0051 | TFT Tornado RC Bumper Turret with Panel Control. [#LOC]. | 13120 |
| 4030-0073 | Front bumper turret Akron Forestry 3462 with a 3293 low flow adjustable nozzle. Include 6035 Joystick 2" electric valve and quick disconnect. [#LOC]. | 11502 |
| 4030-0078 | Akron Fire Fox roof turret 3463 with Joystick control. | 12332 |
| 4100-0033 | 30 gallon integral foam tank for [#LOC]. UPF Poly III [#COL] fill tower. Foam tank capacity will reduce the water tank capacity. | 1252 |
| 4100-0034 | 10 gallon integral foam tank for [#LOC]. UPF Poly III [#COL] fill tower. Foam tank capacity will reduce the water tank capacity. | 1074 |
| 4100-0035 | 20 gallon integral foam tank for [#LOC]. UPF Poly III [#COL] fill tower. Foam tank capacity will reduce the water tank capacity. | 1156 |
| 4100-0036 | 40 gallon integral foam tank for [#LOC]. UPF Poly III [#COL] fill tower. Foam tank capacity will reduce the water tank capacity. | 1364 |
| 4100-0037 | 50 gallon integral foam tank for [#LOC]. UPF Poly III [#COL] fill tower. Foam tank capacity will reduce the water tank capacity. | 1463 |
| 4100-0038 | 100 gallon integral foam tank for [#LOC]. UPF Poly III [#COL] fill tower. Foam tank capacity will reduce the water tank capacity. | 2717 |

| Item No. | Description | |
|---|---|---|
| 4100-0052 | 500 Gallon integral foam tank for [#LOC]. UPF Poly III [#COL] fill tower. The fill tower shall include a an expansion dome. Foam tank capacity will reduce the water tank capacity. Tank capacity is 500 US gallons / 416 Imperial gallons / 1892 Liters. | 8406 |
| 4100-0053 | 30 Gallon external foam tank for [#LOC]. UPF Poly III [#COL]. Locate in storage pan. | 3738 |
| 4100-0055 | 250 Gallon integral foam tank for [#LOC]. UPF Poly III [#COL] fill tower. The fill tower shall include an expansion dome. Foam tank capacity will reduce the water tank capacity. Tank capacity is 250 US gallons / 208 Imperial gallons / 946 Liters. | 4265 |
| 4100-0056 | 180 Gallon integral foam tank for [#LOC]. UPF Poly III [#COL] fill tower. The fill tower shall include an expansion dome. Foam tank capacity will reduce the water tank capacity. Tank capacity is 180 US gallons / 149 Imperial gallons / 681 Liters | 4405 |
| 4100-0058 | 25 gallon integral foam tank for [#LOC]. UPF Poly III [#COL] fill tower. Foam tank capacity will reduce the water tank capacity. | 1242 |
| 4100-0059 | 230 Gallon integral foam tank for [#LOC]. UPF Poly III [#COL] fill tower. The fill tower shall include an expansion dome. Foam tank capacity will reduce the water tank capacity. Tank capacity is 230 US gallons / 191 Imperial gallons / 870 Liters. | 4707 |
| 4100-0062 | Label on Foam Tank to read "Class A Foam" or "Class B Foam" as necessary. | 33 |
| 4100-0064 | 30 Gallon external foam tank for [#LOC]. UPF Poly III [#COL] tower to be accessible from driver side. Includes bolt-on .187" diamond plate cover with end panel (if applicable) and cutout in top panel for fill tower. Locate in storage pan over pump offset to driver side. | 1874 |
| 4100-0069 | 265 gallon integral foam tank for [#LOC]. UPF Poly III [#COL] fill tower. Foam tank capacity will reduce the water tank capacity. 265 US gal/220 Imperial gal/1003 liters | 4707 |
| 4100-0070 | 200 gallon integral foam tank for [#LOC]. UPF Poly III [#COL] fill tower. Foam tank capacity will reduce the water tank capacity. | 3363 |
| 4100-0072 | 150 gallon integral foam tank for class A foam. UPF Poly III Green fill tower. Foam tank capacity will reduce the water tank capacity. | 3662 |
| 4110-0002 | Foam tank (B) outlet. Includes 1" male adapter and connector (ship loose). Outlet location: [#LOC]. | 1063 |
| 4110-0003 | Stainless steel foam can piercer for bottom of foam fill tower. Requires foam fill to be 16" X 16" wide. | 1043 |
| 4110-0004 | Foam tank shutoff. 1/4 turn shut off on each connection to the foam tank - foam discharge refill and sending unit. The Valves shall be located at the tank. | 832 |
| 4110-0005 | Direct 1.5" Foam Tank Fill with Akron 1.5" Valve. A 1.5" FNST tank fill connection with rocker lug plug and a replaceable .25" mesh strainer on the left pump panel. | 839 |
| 4110-0006 | Foam tank outlet. Includes 1" male adaptor and connector (ship loose). Outlet location: [#LOC] | 1062 |
| 4110-0011 | 1.5" Foam tank drain Akron manual valve. | 777 |
| 4110-0013 | Foam tank outlet. Includes 1.5" MNST with cap. A 1.5" FNST fitting shall be included in the loose equipment . Outlet location: [#LOC]. | 1164 |
| 4110-0014 | Foam tank (B) outlet. Includes 2" male adapter. Outlet location: [#LOC]. | 1537 |
| 4110-0015 | Foam tank outlet. Includes 1" Female adaptor and connector (ship loose). Outlet location: [#LOC]. | 1062 |
| 4110-0017 | Direct 1.5" Foam Tank Fill with Akron 1.5" Valve. A 1.5" FNST tank fill connection with rocker lug plug with a replaceable strainer on left side pump panel. | 839 |
| 4110-0018 | Foam tank (B) outlet. Includes 1" male camlock adaptor and connector (ship loose). Outlet location: driver side pump panel. | 1062 |
| 4110-0019 | All foam service valves to be stainless steel IPOS. No PVC valves to be used. | 539 |
| 4110-0020 | Foam tank outlet. Includes 1" male camlock adaptor and connector (ship loose). Outlet location: (1)driver and (1) officer side pump panel. | 1062 |
| 4405-0017 | Booster Reel. Reel to have capacity of 200' of 1" (not included). Includes (reel side) stirrup style rewind switch. Locate [#LOC]. | 3018 |
| 4405-0020 | Booster Reel. Reel to have capacity of 200' of 1" (not included). Includes stirrup style rewind switch. Locate rear body compartment. | 3249 |
| 4405-0021 | Booster reel - front bumper. Center between frame rails. Will hold 100' of 1'' or 150' of 3/4'' booster hose. | 6996 |
| 4405-0026 | Booster Reel Aluminum shall hold 100' of 1" or 150' of .75" Hose Reel installed in [#LOC]. A rewind switch shall be provided at the reel. | 2999 |
| 4405-0036 | Booster Reel. Reel to have capacity of 200' of 1" (not included). Includes rewind switch on wall adjacent to reel. Locate rear upper body compartment. | 3249 |
| 4405-0041 | Booster Reel. Reel to have capacity of 200' of 1.5" (not included). Locate [#LOC]. | 3219 |
| 4405-0042 | Booster Reel. Reel to have capacity of 200' of 1.5" (not included). Includes stirrup style rewind switch. Locate rear body compartment. | 3450 |
| 4405-0044 | Booster Reel. Reel to have capacity of 200' of 1" (not included). Includes rewind switch on officer side wall adjacent to reel. Locate rear body compartment. | 3249 |
| 4405-0045 | Booster Reel. Reel to have capacity of 200' of 1" (not included). Locate [#LOC]. | 3018 |
| 4405-0046 | Booster Reel. Reel to have capacity of 100' of 1" (not included). Includes rewind switch located on bottom of adjustable shelf on far right side corner. Locate rear body compartment offset to officer side as far as possible. | 2999 |

| Item No. | Description | |
|---|---|---|
| 4405-0047 | Drop down booster reel mounted roller assembly. For use with rear compartment mounted booster reel. | 403 |
| 4405-0048 | Booster Reel. Reel to have capacity of 200' of 1" (not included). Locate rear body compartment. Includes rewind switch on driver side wall adjacent to reel. | 3249 |
| 4405-0049 | Booster Reel. Reel to have capacity of 200' of 1 hose with 1/2hp motor. | 3341 |
| 4405-0051 | Booster reel to hold up to 300' of 1" hose (not included) locate on officer side of dunnage storage pan. | 3702 |
| 4405-0052 | Hose Reel Dry 300'X1.75 Hose. Locate in storage pan. | 2710 |
| 4405-0054 | Hose Reel Dry for 250' X 1.75 Collapsible Hose | 2037 |
| 4405-0055 | Booster Reel. Reel to have capacity of 150' of 1" (not included). Locate [#LOC]. Includes body/beavertail mounted rewind switch located to outboard side of reel location. | 3018 |
| 4405-0058 | Booster Reel. Reel to have capacity of 150' of 1" (not included). Locate rear body compartment. | 3018 |
| 4405-0060 | Booster reel Akron Elect valve with a 9315 controller to read pressure only- Behind Front of Cab. Center between frame rails. To hold 100' of 1'' | 7237 |
| 4405-0061 | Akron Booster reel - front bumper. Center between frame rails. Will hold 150' of 1'' or 250' of 3/4'' booster hose. | 7479 |
| 4405-0064 | Booster Reel Akron Model ERWB-16=28. Includes stirrup style rewind switch. Locate rear body compartment. "Hose Not Included" Capacity; up to 150' of .75" or 100' of 1" redline. | 3249 |
| 4405-0065 | Booster Reel. Reel to have capacity of 200' of 1" with Electric Valve Control (hose not included). Locate rear body compartment. | 3848 |
| 4405-0077 | Booster Hose Reel 12 Volt. Shall hold 200' of .75" Booster Hose (Hose not included) Includes stirrup style rewind switch below body. Reel Location: [#LOC] | 3019 |
| 4405-0078 | Booster Reel with 1.5" Air Actuated Valve control at operator panel. Reel to have capacity of 200' of 1" (not included). Locate rear body compartment. | 3249 |
| 4405-0081 | Booster Reel. Reel to have capacity of 150' of 1" (not included). Locate officer side of pan. | 3018 |
| 4405-0083 | Booster Reel Akron. Reel to have the capacity of 250' of 3/4 of redline. Includes rewind switch locate next to reel. Locate rear body compartment. "Hose Not Included". | 2960 |
| 4405-0085 | Booster Reel Riser for rollers. Locate (1) left and (1) right side on hose reel pan. | 196 |
| 4405-0090 | Booster Reel with air actuated control at pump operator panel. Shall hold 200' of 1" Booster Hose (Hose not included) installed in [#LOC] | 2885 |
| 4405-0093 | Booster Reel. Reel to have capacity of 200' of 1" (not included). Includes rewind switch mounted on the exterior of compartment (rear body) on the officer's side. Locate reel in the rear body compartment. | 3249 |
| 4405-0095 | Booster Hose Reel 12 Volt located on the floor of B1. Shall hold 200' of .75" Booster Hose (Hose not included). Includes rewind switch officers side of B1 wall close to opening for easy accessability. | 3019 |
| 4405-0096 | The booster reel manual crank shall have the crank handle extended an additional 12" beyond standard length. | 108 |
| 4405-0097 | Booster Reel Aluminum shall hold 200' of 1" flat lay Hose. installed in [#LOC]. A rewind switch shall be provided at the reel. | 2999 |
| 4405-0098 | Booster Reel 100' X 1" or 150' x 0.75" hose (Hose not included) model EF4026-19-20-8. Located: [#LOC]. | 3014 |
| 4405-0100 | Booster reel rewind switch. Switch located [#LOC]. | 131 |
| 4405-0101 | Hannay EPFF20-30-31 booster reel. Reel to have capacity of 150' of 1" (not included). Locate pump dunnage offset to officer side. Includes body/beavertail mounted rewind switch located to outboard side of reel location. | 3018 |
| 4405-0104 | Booster Reel. Reel to have capacity of 100' of 1" (not included). Includes rewind switch installed in [#LOC] for Dry Chemical. | 2999 |
| 4405-0106 | Air actuated 1.5" valve and with pump panel mounted controller. For use with dealer installed booster reel and roller assembly in B1. Includes air blow-out. | 1425 |
| 4405-0107 | Booster Reel. Reel to have capacity of 200' of 1" (not included). Includes rewind switch on wall adjacent to reel. Locate rear body compartment. | 3249 |
| 4405-0109 | Booster Reel. Reel to have capacity of 300' of .75" (not included). Locate [#LOC]. | 3018 |
| 4405-0110 | Booster Reel air actuated 1.5" valve with plumbing to terminate in B1 and control at pump operator panel. For use with dealer installed booster reel and roller assembly in B1. | 1655 |
| 4405-0112 | Booster Reel. Reel to have capacity of 200' of 1" (not included). Includes rewind switch mounted on the reel. Locate rear body compartment. | 3249 |
| 4405-0113 | Booster Hose Reel 12 Volt located dunnage pan offset to officer side. Shall hold 200' of .75" Booster Hose (Hose not included). Includes rewind switch officers side pump panel. | 3019 |
| 4405-0114 | Booster Reel air actuated valve. Reel to have capacity of 200' of .75" (not included). Includes rewind switch on officer side wall adjacent to reel. Locate rear body compartment. | 3249 |
| 4405-0115 | Booster Reel. Reel to have capacity of 150' of 3/4" or 100' of 1" booster hose. Hose is sold seperately. Location: [#LOC]. | 3019 |
| 4405-0117 | Booster Reel. Reel to have capacity of 100' of 1" (not included). Reel installed in dunnage pan offset to driver side. | 2999 |
| 4405-0118 | Hose Reel Dry for 500'' X 1" Forestry Collapsible Hose (REEL MODEL SBEPC28-23-24). | 3342 |

| Item No. | Description | |
|---|---|---|
| 4405-0119 | Hose Reel 1.5" manual valve with pump panel mounted controller. For use with dealer installed booster reel in dunnage pan officer side area. Connection hose to have extra length so dealer can locate reel on officer side of dunnage pan. (dealer to make final connections to switches). | 1210 |
| 4405-0121 | Akron Booster reel - front bumper. Center between frame rails. Will hold 150' of 1'' or 250' of 3/4'' booster hose. Include painted black Durabak cover and skid plate | 7479 |
| 4405-0123 | Booster Reel EF26-23-24-12. Reel to have capacity of 150' of 1" Niedner or Reeltex (hose not included). Locate driver side of pan. | 3130 |
| 4405-0126 | Hose Reel Dry for 500'' X 1" Forestry Collapsible Hose (REEL MODEL SBEPC28-23-24). Located: [#LOC]. | 3342 |
| 4405-0130 | Booster Reel 100' X 1" or 150' x 0.75" hose (Hose not included) blow out valve included model EF4126-19-20-8. Located: [#LOC]. | 3014 |
| 4405-0134 | Hose Reel Dry 300'X 2.0" Hose. (hose not included). Locate [#LOC]. | 2527 |
| 4405-0135 | Booster Reel w/2" Elkhart Electric Unibody Valve with UICS-2 CAFS Controller. Reel to have capacity of 200' of 1" (not included). Locate driver side of pan. | 6246 |
| 4405-0136 | Drop down booster reel mounted roller assembly. For use with rear compartment mounted booster reel. To extend outward when deployed to route and guide hose past rescue style ladder mounted to rear of body. | 455 |
| 4405-0139 | Booster reel with 200' of 1" red hose. Locate reel in driver side pan. Reel to be painted job color white. | 3697 |
| 4405-0141 | Booster reel to have the following bearings added to each side of the reel in place of the standard bearing. 1" S.A. Bronze bearing complete E-COATED W/304 SST HOUSING Bearing. Include extending grease zerk fitting to rear panel adjacent to roller assembly. | 452 |
| 4405-0142 | Booster Reel with manual hand wheel control Akron valve. Reel to have capacity of 200' of 1" (not included). Locate [#LOC]. | 4278 |
| 4405-0143 | Rollerless slide out booster reel roller assembly. To extend outward when deployed to route and guide hose past body mounted options like access ladder etc. | 707 |
| 4410-0065 | Foam tank outlet. Includes 1" MNST adaptor with cap. Outlet location: [#LOC]. | 1062 |
| 4415-0008 | 1.5" front bumper discharge Akron manual valve. | 1748 |
| 4415-0009 | 1.5" Front Bumper Discharge Hale Manual Valve | 1865 |
| 4415-0010 | 1.5" Front Bumper Discharge Akron Electric Valve | 3607 |
| 4415-0011 | 2.5" Front Bumper Discharge Akron Electric Valve | 3782 |
| 4415-0012 | 1.5" Crosslay with Akron manual valve. Location: [#LOC]. | 1089 |
| 4415-0014 | 2.5" Left Pump Panel Discharge Akron Manual Valve. Location: [#LOC]. | 1134 |
| 4415-0015 | 2.5" Left Panel Discharge Hale Manual Valve. Location: [#LOC] | 1474 |
| 4415-0016 | 2.5" Right Pump Panel Discharge Akron Manual Valve. Location: [#LOC]. | 1259 |
| 4415-0017 | 2.5" Right Pump Panel Discharge Hale Manual Valve. Location: [#LOC] | 1599 |
| 4415-0018 | 2.5" left front hose bed discharge Akron manual valve. | 1639 |
| 4415-0019 | 2.5" Left Front Hosebed Discharge Hale Manual Valve | 1915 |
| 4415-0020 | 2.5" right front hose bed discharge Akron manual valve. | 1639 |
| 4415-0021 | 2.5" Right Front Hosebed Discharge Hale Manual Valve | 1915 |
| 4415-0022 | 2.5" Left Rear Discharge Akron Manual Valve. Location: [#LOC]. | 1325 |
| 4415-0023 | 2.5" Left Rear Discharge Hale Manual Valve Location: [#LOC] | 1599 |
| 4415-0025 | 2.5" Left Rear Discharge Akron Electric Valve | 1707 |
| 4415-0028 | 2.5" Right Rear Discharge Akron Manual Valve. Location: [#LOC]. | 1325 |
| 4415-0029 | 2.5" Right Rear Discharge Hale Manual Valve Location: [#LOC] | 1599 |
| 4415-0030 | 2.5" Right Rear Rearmount Discharge Akron Manual Valve | 1707 |
| 4415-0033 | 3" Left Pump Panel Top mount Discharge Akron Manual Valve (Waterous pumps noted location to be forward lower port). Location: [#LOC]. | 1939 |
| 4415-0034 | 3" Right Pump Panel Discharge Akron Manual Valve (Waterous pumps noted location to be forward lower port). Location: [#LOC]. | 1821 |
| 4415-0035 | 3" Right Pump Panel Discharge Hale Manual Valve Location: [#LOC] | 2232 |
| 4415-0036 | 3" Left Front Hose Bed Discharge Akron Manual Valve. | 2378 |
| 4415-0037 | 3" Right Front Hose Bed Discharge Akron Manual Valve. | 2378 |
| 4415-0038 | 3" Left Rear Discharge Akron Manual Valve. Location: [#LOC]. | 2046 |
| 4415-0039 | 3" Right Rear Discharge Akron Manual Valve. Location: [#LOC]. | 2046 |
| 4415-0041 | 3" Deck Gun Discharge Akron manual valve. | 1859 |
| 4415-0049 | 4" Pump Panel Discharge Hale Electric Valve Location: [#LOC] | 6419 |
| 4415-0050 | 4" Pump Panel Discharge Akron Electric Valve (Waterous pumps noted location to be forward lower port). [#LOC] | 5201 |
| 4415-0051 | 4" Waterway Discharge with 3" Akron Manual Valve. | 2523 |
| 4415-0052 | 4" Waterway Discharge with 4" Akron Electric Valve | 5202 |
| 4415-0053 | 4" Waterway Discharge with 3" Akron Electric Valve | 4349 |
| 4415-0054 | 4" Right Pump Panel Discharge with 3" Akron Manual Valve (Waterous pumps noted location to be forward lower port). Location: [#LOC]. | 2142 |
| 4415-0055 | 4" Left Rear Discharge Akron Electric Valve | 5510 |

| Item No. | Description | |
|---|---|---|
| 4415-0056 | 4" Rear Discharge with Akron Electric Valve. Rear Mount application. Locate to [#LOC] of rear steamer. | 5201 |
| 4415-0057 | 5" Right Pump Panel Discharge with 3" Akron Manual Valve. Location: [#LOC]. | 2969 |
| 4415-0058 | 2.5" Crosslay Akron Manual Valve. Location: [#LOC]. | 1313 |
| 4415-0065 | 1.5" Double Speedlay with Akron Manual Valves. | 2133 |
| 4415-0066 | 1.5" Triple Speedlay with Akron manual valve. | 3346 |
| 4415-0067 | 1.5" left front hose bed preconnect Akron manual valve. | 1134 |
| 4415-0068 | 1.5" right front hose bed preconnect Akron manual valve. | 1134 |
| 4415-0071 | 1.5" Left Rear Discharge Akron Manual Valve. Location: [#LOC]. | 1196 |
| 4415-0072 | 1.5" Right Rear Discharge Akron Manual Valve. Location: [#LOC]. | 1196 |
| 4415-0073 | Triple Speedlay (2) 1.5" and (1) 2.5" with Akron Manual Valve. | 4775 |
| 4415-0075 | 2.5" Rear Driver's Side Preconnect Akron Manual Valve for Rear Mount | 2346 |
| 4415-0077 | Discharge Package (3) 2.5" with Akron Manual Valves and (1) 3" with Akron Manual Valve. For use with rear mounted pump. | 7863 |
| 4415-0078 | 3" Deck Gun Discharge Akron Electricl Valve Body Front for Rear Mount | 8474 |
| 4415-0079 | 3" Deck Gun Discharge Akron Manual Valve Body Rear for Rear Mount | 4635 |
| 4415-0085 | 1.5" Crosslay w/2" Akron Electric Valve Location: [#LOC] | 3171 |
| 4415-0086 | 2.5" Crosslay w/Akron Electric Valve. To be located rearward of 1.5" crosslay(s) if applicable. Location: [#LOC]. | 3646 |
| 4415-0088 | 1.5" Crosslay w/2" Akron Electric Valve & Navigator 9305 Location: [#LOC] | 5934 |
| 4415-0089 | 2.5" Crosslay w/Akron Electric Valve & Navigator 9305. To be located rearward of 1.5" crosslay(s) if applicable. Location: [#LOC] | 6894 |
| 4415-0093 | Double 1.5" Speedlay w/2" Akron Electric Valves | 6356 |
| 4415-0094 | Triple 1.5" Speedlay w/2" Akron Electric Valves | 9677 |
| 4415-0095 | Triple (2) 1.5" & (1) 2.5" Speedlay w/(2) 2" & (1) 2.5" Akron Electric Valves | 11661 |
| 4415-0096 | Double 1.5" Speedlay w/2" Akron Electric Valves & Navigator 9305 | 11781 |
| 4415-0097 | Triple 1.5" Speedlay w/2" Akron Electric Valves & Navigator 9305 | 17843 |
| 4415-0098 | Triple (2) 1.5" & (1) 2.5" Speedlays w/(2) 2" & (1) 2.5" Akron Electric Valves & Navigator 9305 | 20249 |
| 4415-0099 | 3" Deck Gun Discharge Akron Electric Valve | 4274 |
| 4415-0100 | 3" Deck Gun Discharge Akron Electric Valve & Navigator 9305 | 7608 |
| 4415-0102 | 1.5" Front Bumper Discharge Akron Electric Valve & Navigator 9305 | 6621 |
| 4415-0104 | 2.5" Front Bumper Discharge Akron Electric Valve & Navigator 9315 | 7687 |
| 4415-0106 | 1.5" Left Front Hosebed w/2" Akron Electric Valve | 3243 |
| 4415-0107 | 2.5" Left Front Hosebed Akron Electric Valve | 3977 |
| 4415-0108 | 3" Left Front Hosebed Akron Electric Valve | 4799 |
| 4415-0109 | 1.5" Left Front Hosebed w/2" Akron Electric Valve & Navigator 9305 | 6006 |
| 4415-0110 | 2.5" Left Front Hosebed Akron Electric Valve & Navigator 9305 | 7314 |
| 4415-0111 | 3" Left Front Hosebed Akron Electric Valve & Navigator 9305 | 8130 |
| 4415-0115 | 1.5" Right Front Hosebed w/2" Akron Electric Valve | 3243 |
| 4415-0116 | 2.5" Right Front Hosebed Akron Electric Valve | 3977 |
| 4415-0117 | 3" Right Front Hosebed Akron Electric Valve | 4799 |
| 4415-0118 | 1.5" Right Front Hosebed w/2" Akron Electric Valve & Navigator 9305 | 6006 |
| 4415-0119 | 2.5" Right Front Hosebed Akron Electric Valve & Navigator 9305 | 7314 |
| 4415-0120 | 3" Right Front Hosebed Akron Electric Valve & Navigator 9305 | 8130 |
| 4415-0124 | 2.5" Left Pump Panel Discharge Akron Electric Valve. Location: [#LOC] | 3472 |
| 4415-0125 | 2.5" Left Pump Panel Discharge Akron Electric Valve & Navigator 9305. Location: [#LOC] | 6810 |
| 4415-0127 | 2.5" Right Pump Panel Discharge Akron Electric Valve Location: [#LOC] | 3472 |
| 4415-0128 | 3" Right Pump Panel Discharge Akron Electric Valve (Waterous pumps noted location to be forward lower port) Location: [#LOC] | 4242 |
| 4415-0129 | 4" Right Pump Panel Discharge w/3" Akron Electric Valve (Waterous pumps noted location to be forward lower port) Location: [#LOC] | 4562 |
| 4415-0130 | 5" Right Pump Panel Discharge w/3" Akron Electric Valve Location: [#LOC] | 5388 |
| 4415-0131 | 2.5" Right Pump Panel Discharge Akron Electric Valve & Navigator 9305 Location: [#LOC] | 6810 |
| 4415-0132 | 3" Right Pump Panel Discharge Akron Electric Valve & Navigator 9305 (Waterous pumps noted location to be forward lower port) Location: [#LOC] | 7568 |
| 4415-0133 | 4" Pump Panel Discharge Akron Electric Valve & Navigator 9305 Location: [#LOC] | 9183 |
| 4415-0134 | 4" Right Pump Panel Discharge w/3" Akron Electric Valve & Navigator 9305 Location: [#LOC] | 7890 |
| 4415-0135 | 5" Right Pump Panel Discharge w/3" Akron Electric Valve & Navigator 9305 Location: [#LOC] | 8717 |
| 4415-0140 | 1.5" Left Rear Discharge Akron Electric Valve Location: [#LOC] | 3306 |
| 4415-0141 | 2.5" Left Rear Discharge Akron Electric Valve Location: [#LOC] | 3665 |
| 4415-0142 | 3" Left Rear Discharge Akron Electric Valve Location: [#LOC] | 4466 |
| 4415-0143 | 1.5" Left Rear Discharge Akron Electric Valve & Navigator 9305 Location: [#LOC] | 6070 |
| 4415-0144 | 2.5" Left Rear Discharge Akron Electric Valve & Navigator 9305 Location: [#LOC] | 7000 |
| 4415-0145 | 3" Left Rear Discharge Akron Electric Valve & Navigator 9305 Location: [#LOC] | 7796 |
| 4415-0149 | 1.5" Right Rear Discharge Akron Electric Valve Location: [#LOC] | 3306 |
| 4415-0150 | 2.5" Right Rear Discharge Akron Electric Valve Location: [#LOC] | 3665 |

| Item No. | Description | |
|---|---|---|
| 4415-0151 | 3" Right Rear Dicharge Akron Electric Valve Location: [#LOC] | 4466 |
| 4415-0152 | 1.5" Right Rear Discharge Akron Electric Valve & Navigator 9305 Location: [#LOC] | 6070 |
| 4415-0153 | 2.5" Right Rear Discharge Akron Electric Valve & Navigator 9305 Location: [#LOC] | 7000 |
| 4415-0154 | 3" Right Rear Discharge Akron Electric Valve & Navigator 9305 Location: [#LOC] | 7796 |
| 4415-0158 | 3" Left Panel Discharge Top Mount Akron Manual Valve w/30 Degree Droop. (Waterous pumps noted location to be forward lower port.) Location: [#LOC]. | 2293 |
| 4415-0159 | 3" Left Panel Discharge Top Mount Akron Electric Valve (Waterous pumps noted location to be forward lower port) Location: [#LOC] | 4359 |
| 4415-0160 | 3" Left Panel Discharge Top Mount Akron Electric Valve w/30 Degree Chrome Droop (Waterous pumps noted location to be forward lower port) Location: [#LOC] | 4715 |
| 4415-0161 | 2.5" Left Panel Discharge Akron Manual Valve w/30 Degree Chrome Droop. Location: [#LOC]. | 1424 |
| 4415-0162 | 2.5" Left Panel Discharge Akron Electric Valve w/30 Degree Chrome Droop. Location: [#LOC]. | 3764 |
| 4415-0163 | 2.5" Left Panel Dishcarge Akron Electric Valve & Navigator 9305 w/30 Degree Droop Location: [#LOC] | 7101 |
| 4415-0164 | 2.5" Right Panel Discharge Akron Manual Valve w/30 Degree Chrome Droop. Location: [#LOC]. | 1424 |
| 4415-0165 | 3" Right Panel Discharge Akron Manual Valve w/30 Degree Chrome Droop. (Waterous pumps noted if location is forward of steamer use lower discharge port.) Location: [#LOC]. | 2176 |
| 4415-0166 | 2.5" Right Panel Discharge Akron Electric Valve w/30 Degree Chrome Droop Location: [#LOC] | 3764 |
| 4415-0167 | 3" Right Panel Discharge Akron Electric Valve w/30 Degree Chrome Droop (Waterous pumps noted location to be forward lower port) Location: [#LOC] | 4595 |
| 4415-0168 | 2.5" Right Panel Discharge Akron Electric Valve & Navigator 9305 w/30 Degree Droop Location: [#LOC] | 7101 |
| 4415-0169 | 3" Right Panel Discharge Akron Electric Valve & Navigator 9305 w/30 Degree Droop (Waterous pumps noted location to be forward lower port) Location: [#LOC] | 7924 |
| 4415-0172 | 2.5" Auxillary Waterway Discharge Akron Manual Valve. Plumbed from foam manifold and "Y" into w/way pipe downstream from main w/way discharge valve. | 1276 |
| 4415-0179 | 2.5" Auxiliary Deck Gun Discharge Akron Valve for use with CAFS System.Plumbed from foam manifold and "Y" into Deck Gun pipe downstream from main Deck Gun discharge valve. | 2206 |
| 4415-0184 | 3" Deck Gun Discharge Hale Manual Valve | 2085 |
| 4415-0185 | 3" Left Panel Discharge w/Akron Electric Valve & 9305 Navigator for Top Mount Module (Waterous pumps noted location to be forward lower port) Location: [#LOC] | 7690 |
| 4415-0186 | 3" Left Panel Discharge w/Akron Electric Valve & 9305 Navigator for Top Mount Module (Waterous pumps noted location to be forward lower port) Location: [#LOC] | 8045 |
| 4415-0187 | 1.5" Crosslay with Hale Manual Valve Location: [#LOC] | 2096 |
| 4415-0189 | 2.5" Crosslay with Hale Manual Valve Location: [#LOC] | 2826 |
| 4415-0190 | Double 1.5" Speedlay with Hale Manual Valve | 2626 |
| 4415-0191 | Triple 1.5" Speedlay with Hale Manual Valve | 4086 |
| 4415-0193 | Triple Speedlay (2) 1.5" and (1) 2.5" with Hale Manual Valves | 5842 |
| 4415-0194 | 2.5" Front bumper discharge Akron manual valve. | 2009 |
| 4415-0195 | 4" Right Pump Panel Discharge with 3" Hale Manual Valve Location: [#LOC] | 2556 |
| 4415-0196 | 5" Right Pump Panel Discharge with 3" Hale Manual Valve Location: [#LOC] | 3386 |
| 4415-0197 | 2.5" Left Panel Discharge Hale Manual Valve with Droop. Location: [#LOC] | 1764 |
| 4415-0198 | 2.5" Right Pump Panel Discharge Hale Manual Valve with droop. Location: [#LOC] | 1887 |
| 4415-0199 | 3" Right Pump Panel Discharge Hale Manual Valve with Droop Location: [#LOC] | 2580 |
| 4415-0200 | 1.5" Left Panel Discharge Akron Valve | 1134 |
| 4415-0201 | 1.5" Right Panel Discharge Akron Valve. | 1134 |
| 4415-0204 | 1.5" Crosslay with Hale Electric Valve Location: [#LOC] | 3777 |
| 4415-0205 | 2.5" Crosslay with Hale Electric Valve Location: [#LOC] | 4658 |
| 4415-0206 | Double 1.5" Speedlay with Hale Electric Valve | 5989 |
| 4415-0207 | Triple 1.5" Speedlay with Hale Electric Valve | 9129 |
| 4415-0208 | Triple Speedlay (2) 1.5" and (1) 2.5" with Hale Electric Valves | 11036 |
| 4415-0209 | 3" Deck Gun Discharge Hale Electric Valve | 4601 |
| 4415-0210 | 2.5" Auxiliary Deck Gun Discharge Hale Valve for use with CAFS System | 4721 |
| 4415-0211 | 2.5" Front Bumper Discharge Hale Manual Valve | 2070 |
| 4415-0212 | 1.5" Front Bumper Discharge Hale Electric Valve | 3547 |
| 4415-0213 | 2.5" Front Bumper Discharge Hale Electric Valve | 3902 |
| 4415-0214 | 1.5" Left Front Hosebed Discharge Hale Manual Valve | 1296 |
| 4415-0215 | 3" Left Front Hosebed Discharge Hale Manual Valve | 2607 |
| 4415-0216 | 1.5" Left Front Hosebed Discharge Hale Electric Valve | 2977 |
| 4415-0217 | 2.5" Left Front Hosebed Discharge Hale Electric Valve | 3746 |
| 4415-0218 | 3" Left Front Hosebed Discharge Hale Electricl Valve | 5122 |
| 4415-0219 | 1.5" Right Front Hosebed Discharge Hale Manual Valve | 1296 |
| 4415-0220 | 3" Right Front Hosebed Discharge Hale Manual Valve | 2607 |
| 4415-0221 | 1.5" Right Front Hosebed Discharge Hale Electric Valve | 2977 |
| 4415-0222 | 2.5" Right Front Hosebed Discharge Hale Electric Valve | 3746 |
| 4415-0223 | 3" Right Front Hosebed Discharge Hale Electric Valve | 5122 |

| Item No. | Description | |
|---|---|---|
| 4415-0224 | 1.5" Left Panel Discharge Hale Valve | 1250 |
| 4415-0225 | 3" Left Pump Panel Top mount Discharge Hale Manual Valve Location: [#LOC] | 2168 |
| 4415-0226 | 3" Left Pump Panel Top mount Discharge with 30 deg Droop Hale Manual Valve Location: [#LOC] | 2514 |
| 4415-0227 | 2.5" Left Panel Discharge Hale Electric Valve. Location: [#LOC] | 3305 |
| 4415-0228 | 2.5" Left Panel Discharge Hale Electric Valve with Droop. Location: [#LOC] | 3593 |
| 4415-0229 | 3" Left Pump Panel Top mount Discharge Hale Electric Valve Location: [#LOC] | 4683 |
| 4415-0230 | 3" Left Pump Panel Top mount Discharge with 30 deg Droop Hale Electric Valve Location: [#LOC] | 5030 |
| 4415-0231 | 1.5" Right Panel Discharge Hale Valve | 1250 |
| 4415-0232 | 2.5" Right Pump Panel Discharge Hale Electric Valve. Location: [#LOC] | 3431 |
| 4415-0233 | 2.5" Right Pump Panel Discharge Hale Electric Valve with droop. Location: [#LOC] | 3719 |
| 4415-0234 | 3" Right Pump Panel Discharge Hale Electric Valve Location: [#LOC] | 4749 |
| 4415-0235 | 3" Right Pump Panel Discharge Hale Electric Valve with Droop Location: [#LOC] | 5097 |
| 4415-0236 | 4" Right Pump Panel Discharge with 3" Hale Electric Valve Location: [#LOC] | 5070 |
| 4415-0237 | 5" Right Pump Panel Discharge with 3" Hale Electric Valve Location: [#LOC] | 5900 |
| 4415-0238 | 1.5" Left Rear Discharge Hale Manual Valve Location: [#LOC] | 1315 |
| 4415-0239 | 3" Left Rear Discharge Hale Manual Valve Location: [#LOC] | 2274 |
| 4415-0240 | 1.5" Left Rear Discharge Hale Electric Valve Location: [#LOC] | 2997 |
| 4415-0241 | 2.5" Left Rear Discharge Hale Electric Valve Location: [#LOC] | 3431 |
| 4415-0242 | 3" Left Rear Discharge Hale Electric Valve Location: [#LOC] | 4790 |
| 4415-0243 | 1.5" Right Rear Discharge Hale Manual Valve Location: [#LOC] | 1315 |
| 4415-0244 | 3" Right Rear Discharge Hale Manual Valve Location: [#LOC] | 2274 |
| 4415-0245 | 1.5" Right Rear Discharge Hale Electric Valve Location: [#LOC] | 2997 |
| 4415-0246 | 2.5" Right Rear Discharge Hale Electric Valve Location: [#LOC] | 3431 |
| 4415-0247 | 3" Right Rear Discharge Hale Electric Valve Location: [#LOC] | 4790 |
| 4415-0248 | 1.5" Crosslay Elkhart Manual Valve Location: [#LOC]. | 1150 |
| 4415-0249 | 2.5" Crosslay Elkhart Manual Valve. To be located rearward of 1.5" crosslay(s) if applicable. Location: [#LOC] | 1477 |
| 4415-0250 | 1.5" Crosslay w/2" Elkhart Electric Valve Location: [#LOC] | 2543 |
| 4415-0251 | 2.5" Crosslay w/Elkhart Electric Valve. To be located rearward of 1.5" crosslay(s) if applicable. Location: [#LOC] | 3105 |
| 4415-0252 | 1.5" Double Speedlay with Elkhart Manual Valves | 2310 |
| 4415-0253 | SPDLY TRPL 1.5" ELKHART VLV | 3612 |
| 4415-0254 | Triple Speedlay (2) 1.5" and (1) 2.5" with Elkhart Manual Valves | 5447 |
| 4415-0255 | Double 1.5" Speedlay w/2" Elkhart Electric Valves | 5090 |
| 4415-0256 | Triple 1.5" Speedlay w/2" Elkhart Electric Valves | 7782 |
| 4415-0257 | Triple (2) 1.5" & (1) 2.5" Speedlay w/(2) 2" & (1) 2.5" Elkhart Electric Valves | 9853 |
| 4415-0265 | 3" Deck Gun Discharge Elkhart Manual Valve w/RC-10 Controller. | 2102 |
| 4415-0266 | 3" Deck Gun Discharge Elkhart Electric Valve | 3700 |
| 4415-0267 | 2.5" Auxiliary Deck Gun Discharge Elkhart Valve for use with CAFS System | 2374 |
| 4415-0268 | 1.5" Front Bumper Discharge Elkhart Manual Valve | 1838 |
| 4415-0269 | 2.5" Front Bumper Discharge Elkhart Manual Valve | 2178 |
| 4415-0270 | 1.5" Front Bumper Discharge Elkhart Electric Valve | 3228 |
| 4415-0272 | 1.5" Left Front Hosebed Preconnect Elkhart Manual Valve | 1222 |
| 4415-0273 | 2.5" Left Front Hosebed Discharge Elkhart Manual Valve | 1806 |
| 4415-0274 | 3" Left Front Hosebed Discharge Elkhart Manual Valve | 2625 |
| 4415-0275 | 1.5" Left Front Hosebed w/2" Elkhart Electric Valve | 2613 |
| 4415-0276 | 2.5" Left Front Hosebed Elkhart Electric Valve | 3431 |
| 4415-0277 | 3" Left Front Hosebed Elkhart Electric Valve | 4222 |
| 4415-0278 | 1.5" Right Front Hosebed Preconnect Elkhart Manual Valve | 1222 |
| 4415-0279 | 2.5" Right Front Hosebed Discharge Elkhart Manual Valve | 1806 |
| 4415-0280 | 3" Right Front Hosebed Discharge Elkhart Manual Valve | 2625 |
| 4415-0281 | 1.5" Right Front Hosebed w/2" Elkhart Electric Valve | 2613 |
| 4415-0282 | 2.5" Right Front Hosebed Elkhart Electric Valve | 3431 |
| 4415-0283 | 3" Right Front Hosebed Elkhart Electric Valve | 4222 |
| 4415-0284 | 1.5" Left Panel Discharge Elkhart Valve | 1222 |
| 4415-0285 | 4" Pump Panel Discharge Elkhart Electric Valve (Waterous pumps noted location to be forward lower port) Location: [#LOC]. | 5425 |
| 4415-0286 | 5" Pump Panel Discharge with 4" Akron Electric Valve Location: [#LOC] | 5928 |
| 4415-0287 | 5" Pump Panel Discharge with 4" Hale Electric Valve Location: [#LOC] | 7101 |
| 4415-0288 | 5" Pump Panel Discharge with 4" Elkhart Electric Valve Location: [#LOC] | 6153 |
| 4415-0289 | 2.5" Left Pump Panel Discharge Elkhart Manual Valve. Location: [#LOC] | 1302 |
| 4415-0290 | 2.5" Left Panel Discharge Elkhart Manual Valve w/45 Degree Droop. Location: [#LOC]. | 1593 |
| 4415-0291 | 3" Left Pump Panel Top mount Discharge Elkhart Manual Valve Location: [#LOC] | 2185 |
| 4415-0292 | 2.5" Left Pump Panel Discharge Elkhart Electric Valve. Location: [#LOC] | 2930 |
| 4415-0293 | 2.5" Left Panel Discharge Elkhart Electric Valve w/45 Degree Droop Location: [#LOC] | 3219 |
| 4415-0294 | 3" Left Panel Discharge Top Mount Elkhart Electric Valve Location: [#LOC] | 3783 |

| Item No. | Description | |
|---|---|---|
| 4415-0295 | 4" Left Pump Panel Discharge with 3" Akron Manual Valve Top Mount Controlled. (Waterous pumps noted location to be forward lower port.) Location: [#LOC]. | 2142 |
| 4415-0296 | 4" Left Pump Panel Discharge with 3" Hale Manual Valve Top Mount Controlled Location: [#LOC] | 2555 |
| 4415-0297 | 4" Left Pump Panel Discharge with 3" Elkhart Manual Valve Top Mount Controlled (Waterous pumps noted location to be forward lower port) Location: [#LOC] | 2386 |
| 4415-0298 | 1.5" Right Panel Discharge Elkhart Valve | 1222 |
| 4415-0299 | 2.5" Right Pump Panel Discharge Elkhart Manual Valve. Location: [#LOC]. | 1424 |
| 4415-0300 | 2.5" Right Panel Discharge Elkhart Manual Valve w/45 Degree Droop. Location: [#LOC]. | 1593 |
| 4415-0301 | 3" Right Pump Panel Discharge Elkhart Manual Valve Location: [#LOC] | 2066 |
| 4415-0302 | 4" Right Pump Panel Discharge with 3" Elkhart Manual Valve w/RC-10 Control w/lights. Location: [#LOC]. | 2386 |
| 4415-0303 | 5" Right Pump Panel Discharge with 3" Elkhart Unibody Manual Valve Location: [#LOC] | 3214 |
| 4415-0304 | 2.5" Right Pump Panel Discharge Elkhart Electric Valve Location: [#LOC] | 3052 |
| 4415-0305 | 2.5" Right Panel Discharge Elkhart Electric Valve w/45 Degree Droop Location: [#LOC] | 3219 |
| 4415-0306 | 3" Right Pump Panel Discharge Elkhart Electric Valve Location: [#LOC] | 3666 |
| 4415-0307 | 4" Right Pump Panel Discharge w/3" Elkhart Electric Valve (Waterous pumps noted location to be forward lower port) Location: [#LOC] | 3987 |
| 4415-0308 | 5" Right Pump Panel Discharge w/3" Elkhart Electric Valve Location: [#LOC] | 4812 |
| 4415-0309 | 1.5" Left Rear Discharge Elkhart Manual Valve Location: [#LOC] | 1284 |
| 4415-0310 | 2.5" Left Rear Discharge Elkhart Manual Valve. Location: [#LOC]. | 1493 |
| 4415-0311 | 3" Left Rear Discharge Elkhart Manual Valve Location: [#LOC] | 2291 |
| 4415-0312 | 1.5" Left Rear Discharge Elkhart Electric Valve Location: [#LOC] | 2676 |
| 4415-0313 | 2.5" Left Rear Discharge Elkhart Electric Valve Location: [#LOC] | 3117 |
| 4415-0314 | 3" Left Rear Discharge Elkhart Electric Valve Location: [#LOC] | 3890 |
| 4415-0315 | 1.5" Right Rear Discharge Elkhart Manual Valve Location: [#LOC] | 1284 |
| 4415-0316 | 2.5" Right Rear Discharge Elkhart Manual Valve. Location: [#LOC]. | 1493 |
| 4415-0317 | 3" Right Rear Discharge Elkhart Manual Valve Location: [#LOC] | 2291 |
| 4415-0318 | 1.5" Right Rear Discharge Elkhart Electric Valve Location: [#LOC] | 2676 |
| 4415-0319 | 2.5" Right Rear Discharge Elkhart Electric Valve Location: [#LOC] | 3117 |
| 4415-0320 | 3" Right Rear Dicharge Elkhart Electric Valve Location: [#LOC] | 3890 |
| 4415-0322 | Second Left Front Hosebed Discharge 1.5" w/2" Akron Manual Valve | 1134 |
| 4415-0323 | Second left front hose bed discharge 2.5" Akron manual valve. | 1639 |
| 4415-0324 | Second Left Front Hosebed Discharge 2.5" Hale Manual Valve | 1915 |
| 4415-0325 | Second Left Front Hose Bed Discharge 3" Akron Manual Valve. | 2378 |
| 4415-0326 | Second Left Front Hosebed 1.5" w/2" Akron Electric Valve | 3243 |
| 4415-0327 | Second Left Front Hosebed 2.5" Akron Electric Valve | 3977 |
| 4415-0328 | Second Left Front Hosebed 3" Akron Electric Valve | 4799 |
| 4415-0329 | Second Left Front Hosebed 1.5" w/2" Akron Electric Valve & Navigator 9305 | 6006 |
| 4415-0330 | Second Left Front Hosebed 2.5" Akron Electric Valve & Navigator 9305 | 7314 |
| 4415-0331 | Second Left Front Hosebed 3" Akron Electric Valve & Navigator 9305 | 8130 |
| 4415-0335 | Second Left Front Hosebed Discharge 1.5" Hale Manual Valve | 1296 |
| 4415-0336 | Second Left Front Hosebed Discharge 3" Hale Manual Valve | 2607 |
| 4415-0337 | Second Left Front Hosebed Discharge 1.5" Hale Electric Valve | 2977 |
| 4415-0338 | Second Left Front Hosebed Discharge 2.5" Hale Electric Valve | 3746 |
| 4415-0339 | Second Left Front Hosebed Discharge 3" Hale Electricl Valve | 5122 |
| 4415-0340 | Second Left Front Hosebed Preconnect 1.5" Elkhart Manual Valve | 1222 |
| 4415-0341 | Second Left Front Hosebed Discharge 2.5" Elkhart Manual Valve | 1806 |
| 4415-0342 | Second Left Front Hosebed Discharge 3" Elkhart Manual Valve | 2625 |
| 4415-0343 | Second Left Front Hosebed 1.5" w/2" Elkhart Electric Valve | 2613 |
| 4415-0344 | Second Left Front Hosebed 2.5" Elkhart Electric Valve | 3431 |
| 4415-0345 | Second Left Front Hosebed 3" Elkhart Electric Valve | 4222 |
| 4415-0346 | Second Right Front Hose Bed Preconnect 1.5" With 2" Akron Manual Valve. | 1134 |
| 4415-0347 | Second Right Front Hose Bed Discharge 2.5" Akron Manual Valve. | 1639 |
| 4415-0348 | Second Right Front Hosebed Discharge 2.5" Hale Manual Valve | 1915 |
| 4415-0349 | Second Right Front Hosebed Discharge 3" Akron Manual Valve | 2378 |
| 4415-0350 | Second Right Front Hosebed 1.5" w/2" Akron Electric Valve | 3243 |
| 4415-0351 | Second Right Front Hosebed 2.5" Akron Electric Valve | 3977 |
| 4415-0352 | Second Right Front Hosebed 3" Akron Electric Valve | 4799 |
| 4415-0353 | Second Right Front Hosebed 1.5" w/2" Akron Electric Valve & Navigator 9305 | 6006 |
| 4415-0354 | Second Right Front Hosebed 2.5" Akron Electric Valve & Navigator 9305 | 7314 |
| 4415-0355 | Second Right Front Hosebed 3" Akron Electric Valve & Navigator 9305 | 8130 |
| 4415-0359 | Second Right Front Hosebed 1.5" Discharge Hale Manual Valve | 1296 |
| 4415-0360 | Second Right Front Hosebed Discharge 3" Hale Manual Valve | 2607 |
| 4415-0361 | Second Right Front Hosebed Discharge 1.5" w/2" Hale Electric Valve | 2977 |
| 4415-0362 | Second Right Front Hosebed Discharge 2.5" Hale Electric Valve | 3746 |
| 4415-0363 | Second Right Front Hosebed Discharge 3" Hale Electric Valve | 5122 |

| Item No. | Description | |
|---|---|---|
| 4415-0364 | Second Right Front Hosebed Preconnect 1.5" Elkhart Manual Valve | 1222 |
| 4415-0365 | Second Right Front Hosebed Discharge 2.5" Elkhart Manual Valve | 1806 |
| 4415-0366 | Second Right Front Hosebed Discharge 3" Elkhart Unibody Manual Valve and shall terminate with a 3"FNPT X 2.5"MNST adapter. | 2625 |
| 4415-0367 | Second Right Front Hosebed 1.5" w/2" Elkhart Electric Valve | 2613 |
| 4415-0368 | Second Right Front Hosebed 2.5" Elkhart Electric Valve | 3431 |
| 4415-0369 | Second Right Front Hosebed 3" Elkhart Electric Valve | 4222 |
| 4415-0370 | Second 1.5" Front Bumper Discharge Akron Manual Valve. | 1748 |
| 4415-0371 | Second 1.5" Front Bumper Discharge Hale Manual Valve | 1865 |
| 4415-0372 | Second 1.5" Front Bumper Discharge Akron Electric Valve | 3607 |
| 4415-0373 | Second 2.5" Front Bumper Discharge Akron Electric Valve | 3782 |
| 4415-0374 | Second 1.5" Front Bumper Discharge Akron Electric Valve & Navigator 9305 | 6621 |
| 4415-0376 | Second 2.5" Front Bumper Discharge Akron Electric Valve & Navigator 9305 | 7687 |
| 4415-0378 | Second 2.5" Front Bumper Discharge Akron Manual Valve | 2009 |
| 4415-0379 | Second 2.5" Front Bumper Discharge Hale Manual Valve | 2070 |
| 4415-0380 | Second 1.5" Front Bumper Discharge Hale Electric Valve | 3547 |
| 4415-0381 | Second 2.5" Front Bumper Discharge Hale Electric Valve | 3902 |
| 4415-0382 | Second 1.5" Front Bumper Discharge Elkhart Manual Valve | 1838 |
| 4415-0383 | Second 2.5" Front Bumper Discharge Elkhart Manual Valve | 2178 |
| 4415-0384 | Second 1.5" Front Bumper Discharge Elkhart Electric Valve | 3228 |
| 4415-0385 | Second 2.5" Front Bumper Discharge Elkhart Electric Valve | 3804 |
| 4415-0386 | 4" Right Rear Discharge 4" Akron Electric Valve. | 5784 |
| 4415-0387 | 4" Left Rear Discharge Hale Electric Valve | 6652 |
| 4415-0388 | 4" Left Rear Discharge Elkhart Electric Valve | 5731 |
| 4415-0389 | 4" Right Rear Discharge Hale Electric Valve | 6922 |
| 4415-0390 | 4" Right Rear Discharge Elkhart Electric Valve | 6005 |
| 4415-0391 | 4" Deck Gun Discharge Akron Electric Valve. | 6173 |
| 4415-0392 | 4" Deck Gun Discharge Hale Electric Valve | 7310 |
| 4415-0397 | 4" Officer side discharge. Foward of steamer and includes 30 degree droop 4" Akron full flow valve with 4" driver side hand wheel control. | 4279 |
| 4415-0399 | 1.5" Crosslay w/2" Akron Valve Handwheel Control Location: [#LOC] | 2244 |
| 4415-0400 | 1.5" Crosslay w/2" Elkhart Valve Handwheel Control Location: [#LOC] | 2301 |
| 4415-0401 | 2.5" Crosslay w/Akron Valve Handwheel Control. To be located rearward of 1.5" crosslay(s) if applicable. Location: [#LOC] | 2465 |
| 4415-0402 | 2.5" Crosslay w/Elkhart Unibody Valve Handwheel Control. To be located rearward of 1.5" crosslay(s) if applicable. Location: [#LOC] | 2520 |
| 4415-0403 | 3" Deck Gun Discharge Akron Valve Handwheel Control. | 3011 |
| 4415-0404 | 3" Deck Gun Discharge Elkhart Valve Handwheel Control | 3069 |
| 4415-0405 | 1.5" Front Bumper Discharge Akron Valve Handwheel Control | 2904 |
| 4415-0406 | 1.5" Front Bumper Discharge Elkhart Unibody Valve Handwheel Control | 2960 |
| 4415-0407 | 2.5" Front Bumper Discharge Akron Valve Handwheel Control | 3164 |
| 4415-0408 | 2.5" Front Bumper Discharge Elkhart Valve Handwheel Control | 3220 |
| 4415-0409 | 1.5" Left Front Hosebed Preconnect AkronValve Handwheel Control | 2288 |
| 4415-0410 | 1.5" Left Front Hosebed Preconnect Elkhart Valve Handwheel Control | 2346 |
| 4415-0411 | 2.5" Left Front Hosebed Discharge Akron Valve Handwheel Control | 2793 |
| 4415-0412 | 2.5" Left Front Hosebed Discharge Elkhart Valve Handwheel Control | 2848 |
| 4415-0413 | 3" Left Front Hosebed Discharge Akron Valve Handwheel Control | 3534 |
| 4415-0414 | 3" Left Front Hosebed Discharge Elkhart Valve Handwheel Control | 3589 |
| 4415-0415 | 1.5" Right Front Hosebed Preconnect Akron Valve Handwheel Control | 2288 |
| 4415-0416 | 1.5" Right Front Hosebed Preconnect Elkhart Valve Handwheel Control | 2346 |
| 4415-0417 | 2.5" Right Front Hosebed Discharge Akron Valve Handwheel Control | 2793 |
| 4415-0418 | 2.5" Right Front Hosebed Discharge Elkhart Valve Handwheel Control | 2848 |
| 4415-0419 | 3" Right Front Hosebed Discharge Akron Valve Handwheel Control | 3534 |
| 4415-0420 | 3" Right Front Hosebed Discharge Elkhart Valve Handwheel Control | 3589 |
| 4415-0421 | 4" Pump Panel Discharge Akron Valve Handwheel Control. (Waterous pumps noted location to be forward lower port.) Location: [#LOC]. | 4350 |
| 4415-0422 | 4" Pump Panel Discharge Akron Valve Handwheel Control. (Waterous pumps noted location to be forward lower port.) Location: [#LOC]. | 4350 |
| 4415-0423 | 5" Right Pump Panel Discharge with 4" Akron Valve Handwheel Control | 5080 |
| 4415-0424 | 5" Right Pump Panel Discharge with 4" Elkhart Valve Handwheel Control | 5164 |
| 4415-0425 | 2.5" Right Pump Panel Discharge Akron Valve Handwheel Control. Location: [#LOC] | 2414 |
| 4415-0426 | 2.5" Right Pump Panel Discharge Elkhart Valve Handwheel Control. Location: [#LOC] | 2469 |
| 4415-0427 | 2.5" Right Panel Discharge Akron Valve Handwheel Control w/30 Degree Droop Location: [#LOC] | 2579 |
| 4415-0428 | 2.5" Right Panel Discharge Elkhart Valve Handwheel Control w/30 Degree Droop Location: [#LOC] | 2637 |
| 4415-0429 | 3" Right Pump Panel Discharge Akron Valve Handwheel Control (Waterous pumps noted location to be forward lower port). Location: [#LOC]. | 2976 |

| Item No. | Description | |
|---|---|---|
| 4415-0430 | 3" Right Pump Panel Discharge Elkhart Unibody Valve Handwheel Control Location: [#LOC] | 3031 |
| 4415-0431 | 3" Right Panel Discharge Akron Valve Handwheel Control w/Droop. Location:(Waterous pumps noted location to be forward lower port) [#LOC]. | 3331 |
| 4415-0432 | 4" Right Panel Discharge w/3" Akron Valve Handwheel Control. Location: [#LOC]. | 3297 |
| 4415-0433 | 4" Right Panel Dischargew/3" Elkhart Unibody Valve Handwheel Control Location: [#LOC] | 3353 |
| 4415-0434 | 5" Right Pump Panel Discharge with 3" Akron Valve Handwheel Control Location: [#LOC] | 4123 |
| 4415-0435 | 5" Right Pump Panel Discharge with 3" Elkhart Valve Handwheel Control Location: [#LOC] | 4179 |
| 4415-0436 | 1.5" Left Rear Discharge Akron Valve Handwheel Control Location: [#LOC] | 2351 |
| 4415-0437 | 1.5" Left Rear Discharge Elkhart Valve Handwheel Control Location: [#LOC] | 2406 |
| 4415-0438 | 2.5" Left Rear Discharge Akron Valve Handwheel Control Location: [#LOC] | 2480 |
| 4415-0440 | 3" Left Rear Discharge Akron Valve Handwheel Control Location: [#LOC] | 3203 |
| 4415-0441 | 3" Left Rear Discharge Elkhart Unibody Valve Handwheel Control Location: [#LOC] | 3257 |
| 4415-0442 | 4" Left Rear Discharge Akron Valve Handwheel Control | 4662 |
| 4415-0443 | 1.5" Right Rear Discharge Akron Valve Handwheel Control Location: [#LOC] | 2351 |
| 4415-0444 | 1.5" Right Rear Discharge Elkhart Valve Handwheel Control Location: [#LOC] | 2406 |
| 4415-0445 | 2.5" Right Rear Discharge Akron Valve Handwheel Control Location: [#LOC] | 2480 |
| 4415-0446 | 2.5" Right Rear Discharge Elkhart Unibody Valve Handwheel Control Location: [#LOC] | 2535 |
| 4415-0447 | 3" Right Rear Discharge Akron Valve Handwheel Control Location: [#LOC] | 3203 |
| 4415-0448 | 3" Right Rear Discharge Elkhart Valve Handwheel Control Location: [#LOC] | 3257 |
| 4415-0449 | 4" Right Rear Discharge Akron Valve Handwheel Control | 4934 |
| 4415-0455 | Second 1.5" Front Bumper Discharge Akron Valve Handwheel Control | 2904 |
| 4415-0456 | Second 1.5" Front Bumper Discharge Elkhart Valve Handwheel Control | 2960 |
| 4415-0457 | Second 2.5" Front Bumper Discharge Akron Valve Handwheel Control | 3164 |
| 4415-0459 | Second Left Front Hosebed Discharge 1.5" w/2" Akron Valve Handwheel Control | 2288 |
| 4415-0460 | Second Left Front Hosebed Discharge 1.5" w/2" Elkhart Valve Handwheel Control | 2346 |
| 4415-0461 | Second Left Front Hosebed Discharge 2.5" Akron Valve Handwheel Control | 2793 |
| 4415-0462 | Left Front Hosebed Discharge 2.5" Elkhart Unibody Valve Handwheel Control | 2848 |
| 4415-0463 | Second Left Front Hosebed Discharge 3" Akron Valve Handwheel Control | 3534 |
| 4415-0464 | Second Left Front Hosebed Discharge 3" Elkhart Valve Handwheel Control | 3589 |
| 4415-0465 | Second Right Front Hosebed Preconnect 1.5" Akron Valve Handwheel Control | 2288 |
| 4415-0466 | Second Right Front Hosebed Preconnect 1.5" Elkhart Valve Handwheel Control | 2346 |
| 4415-0467 | Second Right Front Hosebed Discharge 2.5" Akron Valve Handwheel Control | 2793 |
| 4415-0468 | Second Right Front Hosebed Discharge 2.5" Elkhart Valve Handwheel Control | 2848 |
| 4415-0469 | Second Right Front Hosebed Discharge 3" Akron Valve Handwheel Control | 3534 |
| 4415-0470 | Second Right Front Hosebed Discharge 3" Elkhart Valve Handwheel Control | 3589 |
| 4415-0471 | 1.5" Left Discharge Akron Valve in Running Board Hose Tray [#LOC]. | 1134 |
| 4415-0472 | 1.5" Left Discharge Hale Valve in Runningboard Hose Tray [#LOC]. | 1250 |
| 4415-0473 | 1.5" Left Discharge Elkhart Valve in Runningboard Hose Tray [#LOC]. | 1222 |
| 4415-0474 | 1.5" Right Discharge Akron Valve in Runningboard Hose Tray [#LOC]. | 1134 |
| 4415-0475 | 1.5" Right Discharge Hale Valve in Runningboard Hose Tray [#LOC]. | 1250 |
| 4415-0476 | 1.5" Right Discharge Elkhart Valve in Runningboard Hose Tray [#LOC]. | 1222 |
| 4415-0477 | 4" Left Rear Discharge Elkhart Valve Handwheel Control | 4747 |
| 4415-0478 | 4" Right Rear Discharge Elkhart Valve Handwheel Control | 5021 |
| 4415-0484 | 2.5" Quad Speedlay with Akron Manual Valves. | 5233 |
| 4415-0486 | Third Left Front Hosebed Discharge 2.5" Akron Manual Valve. | 1639 |
| 4415-0487 | 2.5" Discharge Package Montreal. Includes (8) discharges- (4) each side with droop. | 15709 |
| 4415-0488 | 4" officer rear discharge with 3" valve. Includes 4" FNPT x 4" MNST chrome adaptor with cap (ship loose). | 3560 |
| 4415-0491 | 2.5" Left Panel Discharge Elkhart Manual UnibodyValve w/30 Degree Chrome Droop. Location: [#LOC]. | 1558 |
| 4415-0492 | 2.5" Right Panel Discharge Elkhart Manual UnibodyValve w/30 Degree Chrome Droop. Location: [#LOC]. | 1588 |
| 4415-0493 | 1.5" Crosslay w/2" Elkhart Unibody Manual Valve. Location: [#LOC]. | 1150 |
| 4415-0494 | 1.5" Crosslay w/2" Elkhart Unibody Electric Valve UBEC3 to read flow and pressure. Location: [#LOC] | 5585 |
| 4415-0495 | 2.5" Right Panel Discharge Elkhart Hand Wheel Control UnibodyValve w/30 Degree Chrome Droop Location: [#LOC] | 2553 |
| 4415-0496 | 3" Deck Gun Discharge Elkhart Unibody Valve Handwheel Control | 2962 |
| 4415-0497 | 4" Pump Discharge Elkhart Electric UBEC3 Valve to read flow and pressure. Location: [#LOC] | 7288 |
| 4415-0498 | 1.5" Right Rear Discharge Elkhart Electric UBEC3 Valve to read flow and pressure. Location: [#LOC] | 5418 |
| 4415-0499 | 2.5" Right Rear Discharge Elkhart Electric UBEC3 Valve to read flow and pressure. Location: [#LOC] | 6295 |
| 4415-0500 | 1.5" Front Bumper Crosslay Elkhart Electric UBEC3 Valve to read flow and pressure. | 5745 |
| 4415-0502 | 1.5" Front Bumper Discharge Akron Manual Valve without Blowout | 1748 |
| 4415-0504 | 2.5" Right Panel Discharge Elkhart Manual UnibodyValve Location: [#LOC] | 1454 |
| 4415-0505 | 2.5" Left Panel Discharge Elkhart Manual UnibodyValve Location: [#LOC] | 1423 |
| 4415-0506 | 2.5" Right Panel Discharge Elkhart Hand Wheel Control UnibodyValve Location: [#LOC] | 2421 |

| Item No. | Description | |
|---|---|---|
| 4415-0507 | 4" Officer side discharge. Foward of steamer. Includes 30 degree droop. Hand Wheel Control on operator panel. | 5107 |
| 4415-0508 | 1.5" preconnect discharge with Akron Electric Valve. For use on rear mounted pumps only. Locate [#LOC]. | 3607 |
| 4415-0510 | 1.5"/2.5" Double Speedlay with Akron Manual Valves (1) 1.5" speedlay and (1) 2.5 speedlay. | 2602 |
| 4415-0511 | 1.5" Right Panel Discharge Akron Valve Hand Wheel Control | 2518 |
| 4415-0512 | 2.5" preconnect discharge with Akron Electric Valve. For use on rear mounted pumps only. Locate [#LOC]. | 4811 |
| 4415-0514 | 4" Officer side discharge. Foward of steamer and includes 30 degree droop 4" Elkhart Elect Control full flow valve. | 5620 |
| 4415-0515 | Front jumpline swivel to be recess so WYE valve will clear rise lid and tray. | 186 |
| 4415-0516 | 4" Right Panel Discharge w/ 3" Akron Valve Handwheel Control w/Droop Location: [#LOC] | 3660 |
| 4415-0517 | 4" Right Pump Panel Discharge with 3" Akron Manual Valve w/Droop. Location: [#LOC]. | 2497 |
| 4415-0518 | 4" Right Panel Discharge w/ 3" Akron Valve Electric w/Droop (Waterous pumps noted location to be forward lower port) Location: [#LOC] | 4917 |
| 4415-0519 | 4" Right Pump Panel Discharge w/3" Akron Electric Valve & Navigator 9305 with 30 Degree Droop Location: [#LOC] | 8246 |
| 4415-0520 | 4" Right Pump Panel Discharge with 3" Hale Manual Valve with 30 Degree Droop Location: [#LOC] | 2911 |
| 4415-0523 | 5" Right Panel Discharge w/4" Elkhart Electric UBEC3 Valve to read flow and pressure. Location: [#LOC] | 7609 |
| 4415-0524 | 3" Deck Gun Discharge Elkhart Unibody Manual Valve. | 2095 |
| 4415-0525 | 1.5" Front Bumper Discharge Elkhart Unibody Manual Valve. | 1838 |
| 4415-0526 | Triple Speedlay (2) 1.5" and (1) 2.5" with Elkhart Unibody Manual Valves | 5447 |
| 4415-0527 | 1.5" Crosslay w/2" Elkhart Electric Unibody UBEC1 Valve Location: [#LOC] | 3171 |
| 4415-0528 | 2.5" Left Pump Panel Discharge Elkhart Unibody Electric Valve. Location: [#LOC] | 3472 |
| 4415-0529 | 3" Right Pump Panel Discharge Elkhart Unibody Electric Valve Location: [#LOC] | 4242 |
| 4415-0530 | 4" Pump Panel Discharge Elkhart UBEC1 Electric Valve (Waterous pumps noted location to be forward lower port). Location: [#LOC]. | 5201 |
| 4415-0531 | 4" Pump Panel Discharge Akron Electric Valve with 30 Degree Droop (Waterous pumps noted location to be forward lower port) Location: [#LOC] | 5538 |
| 4415-0536 | 5" Right Pump Panel Discharge with 4" Akron Valve Handwheel Control. Location: [#LOC]. | 4371 |
| 4415-0537 | 2.5" Crosslay Elkhart Unibody Manual Valve. To be located rearward of 1.5" crosslay(s) if applicable. Location: [#LOC] | 1544 |
| 4415-0538 | 1.5" Double Speedlay with Elkhart Unibody Manual Valves | 2188 |
| 4415-0540 | Triple Speedlay (2) 1.5" and (1) 2.5" with Elkhart Unibody Manual Valves | 4891 |
| 4415-0541 | 3" Deck Gun Discharge Elkhart Unibody Manual Valve. | 1975 |
| 4415-0544 | 3" Left Pump Panel Discharge Akron Manual Valve (Waterous pumps noted location to be forward lower port) Location: [#LOC] | 1901 |
| 4415-0545 | 5" Pump Panel Discharge with 4" Elkhart UBEC1 Electric Valve Location: [#LOC] | 6153 |
| 4415-0547 | 2.5" Front Bumper Discharge Elkhart Unibody Manual Valve | 2178 |
| 4415-0549 | 1.5" Front Bumper Discharge Elkhart Electric UBEC1 Valve | 3711 |
| 4415-0550 | 2.5" Double Speedlay with Akron Manual Valves | 2619 |
| 4415-0551 | 2.5" Right Front Hosebed Discharge Akron Manual Valve. Locate offset 11.5" from officer side hosebed side. | 1639 |
| 4415-0552 | 1.5" Front Bumper Crosslay Discharge Akron Manual Valve. | 2455 |
| 4415-0553 | 2.5" Left Front Hosebed Discharge Akron Manual Valve located outlet shall be located 13.625" from inside hosebed wall. | 1639 |
| 4415-0554 | 1.5" Triple Speedlay with Akron Valve Hand Wheel Control. | 7357 |
| 4415-0555 | 3" Deck Gun Discharge Akron Manual Valve with no Plumbing from the valve to deck gun channel Dealer to install Extend-A-Gun and Plumbing from the valve to the channel.. | 1725 |
| 4415-0557 | 2.5" Left Rear Discharge Elkhart Unibody Manual Valve Location: [#LOC]. | 1493 |
| 4415-0558 | 2.5" Right Rear Discharge Elkhart Unibody Manual Valve Location: [#LOC]. | 1493 |
| 4415-0561 | 2.5" Left Panel Discharge Akron Electric Valve w/30 Degree Droop Location: [#LOC] | 3764 |
| 4415-0562 | 3" Right Pump Panel Discharge Akron Electric Valve w/30degree Droop (Waterous pumps noted location to be forward lower port) Location: [#LOC] | 4436 |
| 4415-0563 | 2.5" Right Panel Discharge Akron Electric Valve w/30 Degree Droop Location: [#LOC] | 3764 |
| 4415-0564 | 3" Right Pump Panel Discharge Elkhart Electric Valve w/30degree Droop Location: [#LOC] | 4436 |
| 4415-0566 | 1.5" crosslay w/2" Akron electric valve. Location: [#LOC]. | 3171 |
| 4415-0567 | 2.5" Crosslay w/Akron Electric Valve. To be located rearward of 1.5" crosslay(s) if applicable. Location: [#LOC]. | 3646 |
| 4415-0568 | 3" deck gun discharge Akron electric valve. | 4274 |
| 4415-0569 | 4" deck gun discharge Akron electric valve. | 6173 |
| 4415-0570 | 1.5" Front Bumper Discharge Akron Electric Valve. | 3607 |
| 4415-0571 | Second 1.5" Front Bumper Discharge Akron Electric Valve | 3607 |
| 4415-0572 | 2.5" Front Bumper Discharge Akron Electric Valve | 3782 |
| 4415-0573 | Second 2.5" Front Bumper Discharge Akron Electric Valve | 3782 |

| Item No. | Description | |
|---|---|---|
| 4415-0574 | 2.5" Left Pump Panel Discharge Akron Electric Valve. Location: [#LOC]. | 3472 |
| 4415-0575 | 2.5" Left Panel Discharge Akron Electric Valve w/30 Degree Droop. Location: [#LOC]. | 3472 |
| 4415-0576 | 4" Pump Panel Discharge Akron Electric Valve. (Waterous pumps noted location to be forward lower port.) Location: [#LOC]. | 5201 |
| 4415-0577 | 5" Pump Panel Discharge with 4" Akron Electric Valve. Location: [#LOC]. | 5928 |
| 4415-0578 | 1.5" Left Rear Discharge Akron Electric Valve Location: [#LOC] | 3306 |
| 4415-0579 | 2.5" Left Rear Discharge Akron Electric Valve. Location: [#LOC]. | 3665 |
| 4415-0580 | 3" Left Rear Discharge Akron Electric Valve. Location: [#LOC]. | 4466 |
| 4415-0581 | 4" Left Rear Discharge Akron Electric Valve. | 5510 |
| 4415-0582 | 1.5" Right Rear Discharge Akron Electric Valve Location: [#LOC] | 3306 |
| 4415-0583 | 2.5" Right Rear Discharge Akron Electric Valve. Location: [#LOC]. | 3665 |
| 4415-0584 | 3" Right Rear Dicharge Akron Electric Valve Location: [#LOC] | 4466 |
| 4415-0585 | 4" Right Rear Discharge Akron Electric Valve. | 5784 |
| 4415-0586 | 2.5" Right Pump Panel Discharge Akron Electric Valve. Location: [#LOC]. | 3472 |
| 4415-0587 | 3" Right Pump Panel Discharge Akron Electric Valve. Location: [#LOC]. | 4242 |
| 4415-0588 | 4" Right Pump Panel Discharge w/3" Akron Electric Valve (Waterous pumps noted location to be forward lower port) Location: [#LOC] | 4562 |
| 4415-0589 | 5" Right Pump Panel Discharge w/3" Akron Electric Valve. Location: [#LOC]. | 5388 |
| 4415-0590 | 2.5" Right Panel Discharge Akron Electric Valve w/30 Degree Droop. Location: [#LOC]. | 3764 |
| 4415-0591 | 3" Right Panel Discharge Akron Electric Valve w/30 Degree Droop (Waterous pumps noted location to be forward lower port). Location: [#LOC]. | 4595 |
| 4415-0592 | 4" Right Panel Discharge w/3" Akron valve electric w/droop (Waterous pumps noted location to be forward lower port). Location: [#LOC]. | 4917 |
| 4415-0593 | 3" Right Pump Panel Discharge Akron Electric Valve w/30degree Droop (Waterous pumps noted location to be forward lower port) Location: [#LOC] | 4436 |
| 4415-0594 | 2.5" Right Panel Discharge Akron Electric Valve w/30 Degree Droop Location: [#LOC] | 3764 |
| 4415-0595 | 1.5" Left Front Hosebed w/2" Akron Electric Valve | 3243 |
| 4415-0596 | 2.5" Left Front Hose Bed Akron Electric Valve. | 3977 |
| 4415-0597 | 3" Left Front Hose Bed Akron Electric Valve. | 4799 |
| 4415-0598 | Second Left Front Hosebed 1.5" w/2" Akron Electric Valve | 3243 |
| 4415-0599 | Second Left Front Hosebed 2.5" Akron Electric Valve | 3977 |
| 4415-0600 | Second Left Front Hosebed 3" Akron Electric Valve | 4799 |
| 4415-0601 | 1.5" Crosslay w/2" Akron Electric Valve Location: [#LOC] | 3171 |
| 4415-0602 | 1.5" Right Front Hosebed w/2" Akron Electric Valve | 3243 |
| 4415-0603 | 2.5" Right Front Hose Bed Akron Electric Valve. | 3977 |
| 4415-0604 | 3" Right Front Hose Bed Akron Electric Valve. | 4799 |
| 4415-0605 | Second Right Front Hosebed 1.5" w/2" Akron Electric Valve | 3243 |
| 4415-0606 | Second Right Front Hosebed 2.5" Akron Electric Valve | 3977 |
| 4415-0607 | Second Right Front Hosebed 3" Akron Electric Valve | 4799 |
| 4415-0608 | Double 1.5" Speedlay w/2" Akron Electric Valves. | 6356 |
| 4415-0609 | Triple 1.5" Speedlay w/2" Akron Electric Valves | 9677 |
| 4415-0610 | Triple (2) 1.5" & (1) 2.5" Speedlay w/(2) 2" & (1) 2.5" Akron Electric Valves | 11661 |
| 4415-0611 | Triple (2) 1.5" & (1) 2.5" Speedlay w/(2) 2" & (1) 2.5" Akron Electric Valves | 11661 |
| 4415-0612 | 4" waterway discharge with 3" Akron electric valve. | 4349 |
| 4415-0613 | 4" waterway discharge with 4" Akron electric valve. | 5202 |
| 4415-0614 | 3" Left Panel Discharge Top Mount Akron Electric Valve Location: [#LOC] | 4359 |
| 4415-0615 | 3" Left Panel Discharge Top Mount Akron Electric Valve w/30 Degree Droop (Waterous pumps noted location to be forward lower port) Location: [#LOC] | 4715 |
| 4415-0616 | Third Right Front Hosebed Discharge 2.5" Akron Manual Valve. | 1639 |
| 4415-0617 | 2.5" Left Panel Discharge Akron Manual 3" Valve w/30 Degree Droop. Location: [#LOC]. | 1821 |
| 4415-0618 | 2.5" Auxillary Deck Gun Discharge Manual Valve. Plumbed from foam manifold and "Y" into Deck Gun pipe downstream from main Deck Gun discharge valve. | 1276 |
| 4415-0619 | 4" Right Pump Panel Discharge with 3" Akron Manual Valve. The 4" NST threads shall be a integral part of the valve. (Waterous pumps noted location to be forward lower port.) Location: [#LOC]. | 2142 |
| 4415-0620 | 3" Right Rear Discharge Elkhart Unibody Manual Valve Location: [#LOC] | 2291 |
| 4415-0621 | 3" Left Front Hosebed Discharge Elkhart Unibody Manual Valve | 2625 |
| 4415-0622 | 3" Right Front Hosebed Discharge Elkhart Unibody Manual Valve | 2625 |
| 4415-0623 | 3" Left Rear Discharge Elkhart Unibody Manual Valve Location: [#LOC] | 2291 |
| 4415-0624 | 4" Rear Discharge w/3" Akron Valve Handwheel Control for Rear Mount. The 4" NST Adapter shall be a integral part of the valve. | 3911 |
| 4415-0626 | Triple Speedlay (forward to rearward or bottom to top) (2) 1.5" and (1) 2.5" with Akron Manual Valve. Speedlays are side by side and located inside transverse compartment. | 2398 |
| 4415-0627 | 3" Deck Gun Discharge Elkhart Electric Unibody UBEC3Valve to read flow and pressure. | 6544 |
| 4415-0629 | 2.5" Right Rear Discharge Elkhart Unibody Manual Valve Location: [#LOC] | 1493 |

| Item No. | Description | |
|---|---|---|
| 4415-0631 | 4" Rear Discharge w/4" Akron Valve Handwheel Control for Rear Mount. The 4" NST 30 degree Adapter shall be a integral part of the valve. | 4597 |
| 4415-0633 | 1.5" Right Front Hosebed Preconnect Elkhart Unibody Manual Valve | 1222 |
| 4415-0635 | Second Right Front Hosebed Discharge 2.5" Elkhart Unibody Manual Valve | 1806 |
| 4415-0636 | 4" Right Pump Panel Discharge with 3" Elkhart Unibody Manual Valve. (Waterous pumps noted location to be forward lower port.) Location: [#LOC]. | 2386 |
| 4415-0637 | Second Left Front Hosebed Discharge 3" w/ 3" Elkhart Unibody Manual Valve and shall terminate with a 3"FNPT X 2.5"MNST adapter. | 2625 |
| 4415-0638 | Second Right Front Hosebed Discharge 2.5" w/3" Elkhart Unibody Manual Valve and shall terminate with a 3"FNPT X 2.5"MNST adapter. | 2625 |
| 4415-0639 | 2.5" Left Rear Rearmount Discharge Akron Manual Valve | 1707 |
| 4415-0642 | 2.5" rear preconnect with crosslay style swivel. For use with rear mount pump application. Includes Akron manual valve with controller located on pump operator panel. Locate: [#LOC]. | 2283 |
| 4415-0645 | 1.5" rear preconnect with crosslay style swivel. For use with rear mount pump application. Includes Akron manual valve with controller located on pump operator panel. Locate: [#LOC]. | 2037 |
| 4415-0646 | 1.5" speedlay preconnect with swivel. For use with rear mount pump application. Includes Akron manual valve with controller located on pump operator panel. Locate [#LOC] | 2435 |
| 4415-0650 | Triple speedlay with (2) 1.5" in upper area and (1) 2.5" in lower storage area. All with Akron manual valves. | 3864 |
| 4415-0659 | 2.5" Left Pump Panel Discharge Elkhart Unibody Electric Valve with Droop. Location: [#LOC] | 3615 |
| 4415-0662 | 3" Deck Gun Discharge Elkhart Electric Unibody Valve | 4274 |
| 4415-0665 | 1.5" Front Bumper Discharge Akron Electric Valve & Navigator 9315 | 6621 |
| 4415-0666 | Triple (2) 1.5" & (1) 2.5" Speedlays w/(2) 2" & (1) 2.5" Akron Electric Valves & Navigator 9315 | 20249 |
| 4415-0667 | 2.5" Left Panel Dishcarge Akron Electric Valve & Navigator 9315 w/30 Degree Droop Location: [#LOC] | 6388 |
| 4415-0668 | 2.5" Right Panel Discharge Akron Electric Valve & Navigator 9315 w/30 Degree Droop Location: [#LOC] | 6388 |
| 4415-0669 | 2.5" Left Rear Discharge Akron Electric Valve & Navigator 9315 Location: [#LOC] | 7000 |
| 4415-0670 | 3" Right Panel Discharge Akron Electric Valve & Navigator 9315 w/30 Degree Droop (Waterous pumps noted location to be forward lower port) Location: [#LOC] | 7442 |
| 4415-0671 | 1.5" double speedlays with Akron manual valves. Each outlet connection shall terminate externally (no swivels) on the side of the module just below the speedlay. | 2133 |
| 4415-0672 | 1.5" Triple Speedlay with Akron Manual Valve. Each outlet connection shall terminate externally (no swivels) on the side of the module just below the speedlay. | 3346 |
| 4415-0673 | Triple Speedlay (2) 1.5" and (1) 2.5" with Akron Manual Valve. Each outlet connection shall terminate externally (no swivels) on the side of the module just below the speedlay. | 4775 |
| 4415-0675 | 1.5" Triple Speedlay Elkhart Manual Valves. Each outlet connection shall terminate externally (no swivels) on the side of the module just below the speedlay. | 3612 |
| 4415-0676 | Triple Speedlay (2) 1.5" and (1) 2.5" with Elkhart Manual Valves. Each outlet connection shall terminate externally (no swivels) on the side of the module just below the speedlay. | 5447 |
| 4415-0677 | 1.5" Front Bumper Discharge Akron Electric Valve. For use with rear mount pump. Includes air blow-out with control on pump operator panel. | 2751 |
| 4415-0678 | 1.5" front bumper discharge with Akron manual valve. For use with rear mount pump. Includes air blow-out with control on pump operator panel. | 1683 |
| 4415-0679 | 1.5" front bumper discharge with Elkhart unibody manual valve. For use with rear mount pump. Includes air blow-out with control on pump operator panel. | 1607 |
| 4415-0680 | 1.5" front bumper discharge with Elkhart unibody electric valve. For use with rear mount pump. Includes air blow-out with control on pump operator panel. | 2751 |
| 4415-0681 | 2.5" front bumper discharge with Akron manual valve. For use with rear mount pump. Includes air blow-out with control on pump operator panel. | 1989 |
| 4415-0682 | 2.5" front bumper discharge with Elkhart unibody manual valve. For use with rear mount pump. Includes air blow-out with control on pump operator panel. | 1989 |
| 4415-0683 | 2.5" Front Bumper Discharge Akron Electric Valve. For use with rear mount pump. Includes air blow-out with control on pump operator panel. | 3274 |
| 4415-0684 | 2.5" front bumper discharge with Elkhart unibody electric valve. For use with rear mount pump. | 3274 |
| 4415-0687 | 2.5" rear panel discharge with Akron manual valve. For use with rear mount pump. Location [#LOC]. | 1393 |
| 4415-0688 | 2.5" rear panel discharge with Elkhart unibody manual valve. For use with rear mount pump. Location [#LOC]. | 1393 |
| 4415-0689 | 3" rear panel discharge with Akron manual valve. For use with rear mount pump. Location [#LOC]. | 1680 |
| 4415-0690 | 3" rear panel discharge with Elkhart unibody manual valve. For use with rear mount pump. Location [#LOC]. | 1680 |
| 4415-0691 | 3" Rear panel discharge with Elkhart unibody electric valve. For use with rear mount pump. Location [#LOC]. | 3544 |
| 4415-0692 | 3" rear panel discharge with Akron electric valve. For use with rear mount pump. Location [#LOC]. | 3544 |

| Item No. | Description | |
|---|---|---|
| 4415-0694 | 4" rear panel discharge with 3" Akron manual valve. For use with rear mount pump. Location [#LOC]. | 1702 |
| 4415-0695 | 4" rear panel discharge with 3" Elkhart unibody electric valve. For use with rear mount pump. Location [#LOC]. | 3109 |
| 4415-0696 | 4" rear panel discharge with 3" Akron electric valve. For use with rear mount pump. Location [#LOC]. | 3109 |
| 4415-0697 | 4" rear panel discharge with 4" Akron electric valve. For use with rear mount pump. Location [#LOC]. | 4188 |
| 4415-0698 | 4" rear panel discharge with 4" Elkhart unibody electric valve. For use with rear mount pump. Location [#LOC]. | 4188 |
| 4415-0699 | 5" rear panel discharge with 4" Akron electric valve. For use with rear mount pump. Location [#LOC]. | 5928 |
| 4415-0700 | 5" rear panel discharge with 4" Elkhart unibody electric valve. For use with rear mount pump. Location [#LOC]. | 5928 |
| 4415-0703 | 1.5" preconnect discharge with Elkhart unibody manual valve. Includes swivel style connection. Location [#LOC]. | 1287 |
| 4415-0704 | 2.5" preconnect discharge with Elkhart unibody manual valve. Includes swivel style connection. Location [#LOC]. | 1537 |
| 4415-0705 | 2.5" preconnect discharge with Akron electricl valve. Includes swivel style connection. Location [#LOC]. | 2930 |
| 4415-0706 | 2.5" preconnect discharge with Elkhart unibody electricl valve. Includes swivel style connection. Location [#LOC]. | 2930 |
| 4415-0707 | 1.5" preconnect discharge with Akron electric valve. Includes swivel style connection. Location [#LOC]. | 2852 |
| 4415-0708 | 1.5" preconnect discharge with Elkhart unibody electric valve. Includes swivel style connection. Location [#LOC]. | 3459 |
| 4415-0709 | 3" Deck gun discharge with Akron manual valve. For use with rear mount pump and for forward body area. Location [#LOC]. | 2537 |
| 4415-0710 | 3" Deck gun discharge with Akron electric valve. For use with rear mount pump and for forward body area. Location [#LOC]. | 3923 |
| 4415-0712 | 3" Deck gun discharge with Elkhart unibody electricl valve. For use with rear mount pump and for forward body area. Location [#LOC]. | 3923 |
| 4415-0713 | 3" Deck gun discharge with Akron manual valve. For use with rear mount pump and for rearward body/pump module area. Location [#LOC]. | 1517 |
| 4415-0714 | 3" Deck gun discharge with Akron electric valve. For use with rear mount pump and for rearward body/pump module area. Location [#LOC]. | 3236 |
| 4415-0718 | 1.5" Single Speedlay with Akron Manual Valves. | 1156 |
| 4415-0719 | 3" Deck Gun Discharge Akron Electric Valve & Navigator 9315 | 7608 |
| 4415-0721 | Quad Speedlay (3) 1.5" / (1) 2.5" with Akron Manual Valves. Located inside transverse compartment. | 3550 |
| 4415-0722 | 3" Deck Gun Discharge Akron Electric Valve with a 9315 valve controller with pressure reading only. [#LOC] | 4758 |
| 4415-0723 | 4" Discharge Akron Electric Valve & Navigator 9315 (Waterous pumps noted location to be forward lower port). Location: [#LOC]. | 9183 |
| 4415-0724 | 4" Rear Mount Discharge w/3" Akron 9315 Electric Valve to read Flow and Pressure with 30 degree droop (Waterous pumps noted location to be forward lower port) Location: [#LOC] | 7890 |
| 4415-0725 | 4" Rear Mount Discharge w/3" Akron 9315 Electric Valve to read Pressure (Waterous pumps noted location to be forward lower port) Location: [#LOC] | 4502 |
| 4415-0726 | 1.5" Front Bumper Discharge Akron Electric Valve & Navigator 9315 with Pressue Reading only. | 4039 |
| 4415-0727 | 1.5" Crosslay w/2" Akron Electric Valve & Navigator 9315 to Read Pressure only Location: [#LOC] | 3759 |
| 4415-0728 | 2.5" Rear Mount Discharge Akron Electric Valve & Navigator 9315 to Read Pressure only. Location: [#LOC] | 3943 |
| 4415-0731 | 2.5" Left Pump Panel Discharge UBEC3 Electric Valve with 30 degree droop to read flow and pressure. Location: [#LOC] | 6259 |
| 4415-0732 | 2.5" Right Pump Panel Discharge UBEC3 Electric Valve with 30 degree droop to read flow and pressure. Location: [#LOC] | 6259 |
| 4415-0733 | 4.5" Right Pump Panel Discharge with 3" Akron Manual Valve w/Droop Location: right side discharge 1 [#LOC] | 2715 |
| 4415-0739 | 3" Right Pump Panel Discharge Elkhart Electric Valve w/30degree Droop to Terminate with 2.5" MNST w/cap Location: [#LOC] | 4436 |
| 4415-0740 | 2.5" preconnect discharge with Akron manual valve. With swivel style connection. Location: [#LOC]. | 1537 |
| 4415-0741 | 1.5" preconnect discharge with Akron manual valve. With swivel style connection. Location: [#LOC]. | 1287 |
| 4415-0742 | 2.5" rear panel discharge with Akron electric valve. For use with rear mount pump. Location [#LOC]. | 3333 |

| Item No. | Description | |
|---|---|---|
| 4415-0743 | 2.5" rear panel discharge with Elkhart unibody electric valve. For use with rear mount pump. Location [#LOC]. | 3333 |
| 4415-0747 | 4" Pump Panel Discharge Akron Electric Navigator 9315 Valve (Read Pressure only) Location: [#LOC] | 5695 |
| 4415-0749 | 4" rear panel discharge with 4" Akron manual valve with handwheel. For use with rear mount pump. Location [#LOC]. | 3563 |
| 4415-0751 | 2.5" Crosslay Elkhart UBEC3 Electric Valve to read flow and pressure.. To be located rearward of 1.5" crosslay(s) if applicable. Location: [#LOC] | 6116 |
| 4415-0753 | Second Left Front Hosebed Preconnect 1.5" Elkhart Unibody Manual Valve | 1222 |
| 4415-0754 | Left Front Hose Bed Discharge 2.5" Elkhart Unibody Manual Valve. | 1806 |
| 4415-0755 | Right Front Hosebed Discharge 2.5" Elkhart Unibody Manual Valve | 1806 |
| 4415-0756 | Second 1.5" Right Front Hosebed Preconnect Elkhart Unibody Manual Valve | 1222 |
| 4415-0757 | 1.5" Front Bumper Discharge Elkhart Electric UBEC3 Valve to read flow and pressure. | 6014 |
| 4415-0758 | Left Front Hosebed Discharge 2.5" Elkhart Unibody UBEC3 Valve to read flow and pressure. | 6215 |
| 4415-0759 | Right Front Hosebed Discharge 2.5" Elkhart Unibody UBEC3 Valve to read flow and pressure. | 6215 |
| 4415-0760 | 2.5" Front Bumper Discharge Akron Manual Valve without Blowout. | 2009 |
| 4415-0762 | 4" Pump Panel Discharge Akron Electric Valve with 30 Degree Droop. Location: [#LOC]. | 5538 |
| 4415-0767 | 2.5" Right Panel Discharge Akron Manual 3" Valve w/30 Degree Droop Location: [#LOC] | 1821 |
| 4415-0769 | Double 1.5" Speedlay w/2" Akron Electric Valves & Navigator 9315 | 11781 |
| 4415-0771 | 4" Deck Gun Discharge Akron Electric Valve & Navigator 9315 | 7712 |
| 4415-0772 | 4" Deck Gun Discharge Elkhart Electric Unibody Valve | 6392 |
| 4415-0773 | 2.5" Right Pump Panel Discharge w/3" Elkhart Electric Unibody Valve and 30degree Droop [#LOC] | 4436 |
| 4415-0774 | 3" Right Front Hosebed Elkhart Electric Unibody Valve | 4222 |
| 4415-0775 | 3" Left Front Hosebed Elkhart Electric Unibody Valve | 4222 |
| 4415-0777 | 2.5" Left Panel Discharge 3" Akron Electric 9315 Navigator Valve w/30 Degree Droop to Read Pressure and Flow Location: [#LOC] | 6424 |
| 4415-0778 | 2.5" Crosslay w/Akron 3" Electric Valve & Navigator 9315 include 3" plumbing. To be located rearward of 1.5" crosslay(s) if applicable. Location: [#LOC] | 7134 |
| 4415-0779 | 2.5" Left Rear Discharge with Akron Navigator 9315 3" Electric Valve and 3" Piping Location: [#LOC] | 8130 |
| 4415-0781 | 3" Right Pump Panel Discharge UBEC3 Electric Valve with 30 degree droop to read flow and pressure. Location: [#LOC] | 7442 |
| 4415-0782 | 2.5" Left Front Hosebed Include Akron 3" Electric Valve & 9315 NavigatorControler w/3" Plumbing. To terminate at the left front of the hosebed. | 8130 |
| 4415-0783 | Double 2.5" Speedlay w/Akron Navigator 9315 3" Electric Valve Controller. Include 3" piping and to terminate with a 2.5" brass swivel. | 14266 |
| 4415-0784 | 1.5" Rear Panel Discharge manual Akron Valve. Locate [#LOC] | 1748 |
| 4415-0805 | 5" Left Pump Panel Discharge W/4" Akron Electric Navigator 9315 valve and controller. Include valve position display pressure and flow meter. [#LOC] | 9272 |
| 4415-0806 | 5" Right Pump Panel Discharge W/4" Akron Electric Navigator 9315 valve and controller. Include valve position display pressure and flow meter. [#LOC] | 9272 |
| 4415-0807 | Dual Ground Sweep Nozzles 50 GPM. Locate at front (1) left and (1) right sides control at operator panel. | 1771 |
| 4415-0808 | 2.5" Left Rear Discharge w/3" Akron Manual Valve. Include 3" plumbing to terminate with 2.5" threads.Location: [#LOC] | 2046 |
| 4415-0811 | Akron 2.5" foam system discharge with swing handle. For use with Williams Advent or Hot Shot foam systems. Locate to [#LOC]. | 1254 |
| 4415-0812 | Elkhart Unibody 2.5" foam system discharge with swing handle. For use with Williams Advent or Hot Shot foam systems. Locate to [#LOC]. | 1254 |
| 4415-0830 | 3" Right Pump Panel Discharge Elkhart Unibody Manual Valve. Location: [#LOC] | 1925 |
| 4415-0831 | 3" Right Pump Panel Discharge Elkhart Electric Unibody Valve with 30 degre droop elbow. Location: [#LOC] | 4104 |
| 4415-0834 | 4" Deck Gun Discharge Outlet with 6" Electric Elkhart Valve and plumbing. Require 4" Monitor | 6788 |
| 4415-0835 | 4" Deck Gun Discharge Outlet with 6" Electric Akron Valve and plumbing. Requires 4" Monitor. | 6788 |
| 4415-0842 | 5" Right Side Discharge 5" Elkhart Electric Valve. Locate: [#LOC] | 5979 |
| 4415-0847 | Akron 635 Swivel with turning vane Located on Top of Bumper officer's side of center tray for Front Bumper Discharge | 190 |
| 4415-0849 | 5" Pump Panel Discharge 4" Akron Electric Valve & Navigator 9315 (Waterous pumps noted location to be forward lower port) Location: [#LOC] | 8742 |
| 4415-0852 | 6" Right Side Discharge 6" Elkhart Electric Valve with Unibody controller. Locate: [#LOC] | 6761 |
| 4415-0853 | 6" Left Side Discharge 6" Elkhart Electric Valve with Unibody controller. Locate: [#LOC] | 6761 |
| 4415-0854 | 3" Left Rear Discharge Elkhart Electric Unibody Valve Location: [#LOC] | 3847 |
| 4415-0855 | 3" Right Rear Discharge Elkhart Electric Unibody Valve Location: [#LOC] | 3847 |
| 4415-0856 | 3" Right Side Discharge Elkhart Electric Unibody Valve. Location: [#LOC] | 3847 |
| 4415-0858 | Triple speedlay with (1) 1.5" and (1) 2.5" in lower storage area and (1) 1.5" in upper storage area. All with Akron manual valves. | 3869 |

| Item No. | Description | |
|---|---|---|
| 4415-0859 | Triple speedlay with (1) 1.5" and (1) 2.5" in lower storage area and (1) 1.5" in upper storage area. All with Elkhart Unibody manual valves. | 3992 |
| 4415-0874 | 1.75" Front Bumper Crosslay Discharge with 2" Akron Manual Valve. Include 2" plumbing from pump compartment to back of cab. From back of cab to crosslay swivel will be 2" plumbing. | 2636 |
| 4415-0877 | 2.5" Crosslay Elkhart UBEC1 Electric Valve. To be located rearward of 1.5" crosslay(s) if applicable. Location: [#LOC] | 3105 |
| 4415-0878 | 2.5" Right Panel Discharge Elkhart Unibody Electric Valve. Location: [#LOC] | 3492 |
| 4415-0880 | 2.5" Left Panel Discharge with Elkhart Unibody Manual 3" Valve and 30 Degree Droop Location: [#LOC] | 1821 |
| 4415-0882 | 2.5" preconnect discharge with Akron 3" manual valve and 3" plumbing reduce to a 2.5" at the swivel. For use on rear mount pump. Includes swivel style connection. Location: driver side under hosebed (outboard). | 2141 |
| 4415-0889 | 2.5" Front Bumper Discharge Elkhart Electric UBEC3 Valve to read flow and pressure. | 6252 |
| 4415-0892 | 3" Front Bumper Discharge Akron Manual Valve. Location; 3" front bumper discharge piped through the center of the center front bumper tray and to come out thru the front bumper. Piping to have a cover plate in tray. | 4137 |
| 4415-0895 | Hose bib discharge 3/4" with valve. Location Officer's side pump panel. | 343 |
| 4415-0899 | 4" Waterway Discharge with 3" Elkhart Unibody Manual Valve | 2770 |
| 4415-0903 | 1.5" Front Bumper Crosslay Discharge Akron Manual Valve | 2571 |
| 4415-0904 | 2" front bumper discharge Elkhart Electric valve. Include Elkhart electric valve plumbing and harness from the valve to joystick control located in cab console. Discharge to terminate and capped off just below the center of the bumper for dealer supplied and installed joystick and bumper turret. | 2694 |
| 4415-0905 | Akron 1.5" foam system discharge with swing handle. For use with Williams Advent or Hot Shot foam systems. Locate to [#LOC]. | 1020 |
| 4415-0907 | 1.5" front bumper discharge plumbing from back of cab to front bumper. | 626 |
| 4415-0908 | 2.5" Rear Mount Discharge Akron Electric Valve & Navigator 9315 to Read Pressure only w/30 Degree Droop. Location: [#LOC] | 4077 |
| 4415-0910 | 2.5" hose bed discharge Akron manual valve [#LOC]. | 1639 |
| 4415-0911 | Double 1.5" Speedlay w/2" Akron Electric Valves & Navigator 9315 to read Pressure only. | 7514 |
| 4415-0912 | Second Left Front Hosebed 3" Elkhart Unibody manual Valve | 2624 |
| 4415-0915 | 6" Waterway Discharge with 6" Akron Electric Valve. | 6768 |
| 4415-0916 | 4" Deck Gun Discharge Akron Valve Handwheel Control. | 5107 |
| 4415-0918 | 1.5" Front Bumper Crosslay Discharge Elkhart Unibody Manual Valve | 2455 |
| 4415-0919 | Deck gun monitor 3" Gemini manual hand wheel model 34700011 and nozzle 2.5" NH Excel model 51471000. | 3876 |
| 4415-0920 | Left Front Hosebed Discharge 2.5" Elkhart Unibody UBEC1 Valve. | 3430 |
| 4415-0921 | Right Front Hosebed Discharge 2.5" Elkhart Unibody UBEC1 Valve. | 3430 |
| 4415-0923 | 4" Right Pump Panel Discharge with 3" Akron Manual Valve. Include a 4"FNST swivel x 4"MNST 30 degree droop adapter and cap. Location: [#LOC]. | 2497 |
| 4415-0924 | 2.5" Single Speedlay with Akron manual valve located at lower storage area offset to rear. | 1465 |
| 4415-0925 | All Discharge/Intake caps and plug to be Kochek brand and Powder coated. Color; White. | 665 |
| 4415-0926 | 1.5"/2.5" Double Speedlay with Akron Manual Valves upper 1.75" speedlay and lower 2.5" speedlay. | 2602 |
| 4415-0929 | 2.5" Right Front Hosebed Akron Electric Valve & Pro Navigator 9325 controller with pressue read out. | 4773 |
| 4415-0930 | 2.5" Left Front Hosebed Akron Electric Valve & Pro Navigator 9325 controller with pressue read out. | 4773 |
| 4415-0931 | 2.5" Front Bumper Discharge Akron Electric Valve & Navigator Pro Controller 9325 with pressure read out. | 4583 |
| 4415-0932 | Double 1.5" Speedlay w/2" Akron Electric Valves & Navigator Pro 9325 with Pressure read out. | 7989 |
| 4415-0933 | 2.5" Right Panel Discharge Akron Electric Valve & Navigator Pro 9325 controller w/30 Degree Droop to Read Pressure. Location: [#LOC] | 4566 |
| 4415-0934 | 2.5" Left Panel Discharge Akron Electric Valve & Navigator Pro 9325 controller w/30 Degree Droop to Read Pressure. Location: [#LOC] | 4281 |
| 4415-0935 | 4" Right Pump Panel Discharge w/3" Akron Electric Valve & Navigator Pro 9325 with Pressure read out. (Waterous pumps noted location to be forward lower port) Location: [#LOC] | 5690 |
| 4415-0936 | 4" Pump Panel Discharge Akron Electric Valve & Navigator 9325 to read flow and pressure w/30 degree droop. (Waterous pumps noted location to be forward lower port). Location: [#LOC]. | 6573 |
| 4415-0937 | 3" Deck Gun Discharge Akron Electric Valve & Navigator read flow and pressure with 9325 controller. | 5862 |
| 4415-0938 | 2.5" Left Pump Panel Discharge Akron Manual Valve. The discharge shall extend out beyond the pump panel w/Chrome plated finish. Location: [#LOC]. | 1279 |
| 4415-0939 | 2.5" Right Pump Panel Discharge Akron Manual Valve. The discharge shall extend out beyond the pump panel w/Chrome plated finish. Location: [#LOC]. | 1279 |

| Item No. | Description | |
|---|---|---|
| 4415-0940 | 3" Right Pump Panel Discharge Akron Manual Valve. The discharge shall extend out beyond the pump panel w/Chrome plated finish. (Waterous pumps noted location to be forward lower port). Location: [#LOC]. | 1966 |
| 4415-0941 | 4" Right Pump Panel Storz Discharge with 3" Akron Manual Valve. Include 3" FNST X 4" Storz 30 degree elbow adapter with cap. (Waterous pumps noted location to be forward lower port). Location: [#LOC]. | 2728 |
| 4415-0942 | Left Rear Discharge 2.5" Elkhart Unibody electric valve with UICS-2 CAFS Controller. | 4864 |
| 4415-0943 | 3" Deck Gun Discharge Akron Electric Valve & Navigator with 9323 controller. | 4297 |
| 4415-0944 | 3" Right Panel Discharge Akron Electric Valve & Navigator 9325 w/30 Degree Droop (Waterous pumps noted location to be forward lower port) Location: [#LOC] | 5823 |
| 4415-0945 | 1.5" Front Bumper Discharge Elkhart Electric Valve with UICS-2 CAFS Controller. | 5144 |
| 4415-0946 | 1.5" Crosslay w/2" Elkhart Electric Unibody Valve with UICS-2 CAFS Controller. Location: [#LOC]. | 4604 |
| 4415-0947 | 2.5" Right Panel Discharge Elkhart Unibody Electric Valve w/Droop and include UICS-2 CAFS Controller. Location: [#LOC]. | 5046 |
| 4415-0948 | Preconnect extension (Each). The front hosebed preconnect to be extended to the rear of the hosebed area. Includes smooth plate cover. Location: [#LOC]. | 526 |
| 4415-0952 | 4" Deck Gun Discharge Outlet with 6" Electric Akron Valve and plumbing. Require 4" Monitor. Locate right rear. | 7942 |
| 4415-0954 | 1.5" Front Bumper Discharge Akron Electric Valve & Navigator 9325 controller to read flow and pressure.. | 6358 |
| 4415-0955 | 3" Deck Gun Discharge Akron Electric Valve with 9325 Navigator Controller to read flow and pressure. | 6516 |
| 4415-0956 | 4" Right Rear Discharge Akron Electric Valve with 9325 Navigator controller to read flow and pressure. [#LOC]. | 8618 |
| 4415-0959 | 3" Deck Gun Discharge Akron Electric Valve with 9325 Navigator Controller(to read pressure only). | 4446 |
| 4415-0963 | One (1) pre-connect 1.5" adaptation to Storz. The pre-connect extension hose shall include an adapter to Storz and the pre-connect nozzle (sold separately in loose equipment) shall be supplied with a Storz adapter. | 215 |
| 4415-0964 | Triple speedlay with (2) 1.5" in lower storage area and (1) 2.5" in upper storage area. All with Akron manual valves. | 3869 |
| 4415-0965 | Left Front Hosebed Discharge 3" Akron Manual Valve and shall terminate with a 3"FNPT X 2.5"MNST adapter. | 2395 |
| 4415-0966 | Right Front Hosebed Discharge 3" Akron Manual Valve and shall terminate with a 3"FNPT X 2.5"MNST adapter. | 2395 |
| 4415-0967 | 1.5" Crosslay w/2.5" Akron Manual Valve and plumbing. Include 2.5" FNST X 1.5" MNST adapter. Location: [#LOC]. | 1327 |
| 4415-0969 | 2.5" left front hose bed discharge Akron manual valve. Locate discharge(s) approximately 26" up from hosebed floor. | 1966 |
| 4415-0970 | 5" Right Pump Panel Discharge with 3" Akron Manual Valve w/Droop. Include a 3"FNST swivel x 5"Storz adapter and a 5"Storz x 4" Storz with cap. Location: [#LOC]. | 2854 |
| 4415-0972 | 4" Right Pump Panel Storz Discharge with 4" Akron Electric Valve. Include 4" FNST X 4" Storz 30 degree elbow adapter with cap. (Waterous pumps noted location to be forward lower port). Location: [#LOC]. | 5394 |
| 4415-0973 | 5" Right Pump Panel Storz Discharge with 3" Akron Manual Valve. Include 3" FNST X 5" Storz 30 degree elbow adapter with cap. (Waterous pumps noted location to be forward lower port). Location: [#LOC]. | 2854 |
| 4415-0975 | 2.5" Front Bumper Crosslay Discharge Akron Electric Valve. | 3782 |
| 4415-0976 | 3" Auxillary CAFS Deck Gun Discharge Electric Unibody Valve. Plumbed from foam manifold and "Y" into Deck Gun pipe downstream from main Deck Gun discharge valve. | 4274 |
| 4415-0977 | 2.5" Front Bumper Crosslay Discharge Akron Manual Valve. | 2808 |
| 4415-0986 | 4" Right Pump Panel Discharge w/4" Akron Electric Valve with 9323 controller. (Waterous pumps noted location to be forward lower port) Location: [#LOC] | 5311 |
| 4415-0987 | 3" Right Front Hosebed Elkhart Electric Unibody Valve. Termnate with a 3"FNPT X 2.5" MNST. | 4222 |
| 4415-0988 | 3" Left Front Hosebed Elkhart Electric Unibody Valve. Terminate with a 3"FNPT X 2.5" MNST. | 4222 |
| 4415-0989 | Left Front Hosebed Discharge 3" w/ 3" Elkhart Unibody Manual Valve and shall terminate with a 3"FNPT X 2.5"MNST adapter. | 2625 |
| 4415-0991 | 4" Pump Panel Discharge Akron Electric Valve & Navigator 9325 to read flow and pressure. (Waterous pumps noted location to be forward lower port). Location: [#LOC]. | 6348 |
| 4415-0992 | 4" Pump Panel Discharge Akron Electric Valve & Navigator 9325 (Waterous pumps noted location to be forward lower port). Location:Left Side Discharge 1. | 9201 |
| 4415-0993 | 3" Left Rear Discharge Akron Electric Valve with 9323 controller. Location: [#LOC]. | 4466 |
| 4415-0994 | 4" waterway discharge with 4" Akron electric valve with 9323 controller. | 5202 |
| 4415-0996 | 1.5" Front Bumper Discharge Akron Electric Valve with 9323 controller. | 3607 |
| 4415-0999 | 4" Right Pump Panel Discharge w/3" Akron Electric Valve and 9323 controller. (Waterous pumps noted location to be forward lower port) Location: [#LOC] | 4562 |
| 4415-1000 | Double 1.5" Speedlay w/2" Elkhart Electric Unibody Valve with UICS-2 CAFS Controllers. | 7956 |

| Item No. | Description | |
|---|---|---|
| 4415-1001 | 4" Right Panel Discharge w/30 Degree Droop. Include 4" Akron Electric Valve w/9323 Controller. (Waterous pumps noted location to be forward lower port) Location: [#LOC] | 5546 |
| 4415-1003 | 1.5" Front Bumper Crosslay Discharge Elkhart Unibody Valve with hand wheel control. | 3316 |
| 4415-1004 | 1.5" Double Speedlay with Elkhart Unibody Valves with hand wheel controls. | 4881 |
| 4415-1005 | 2.5" Left Panel Discharge Elkhart Hand Wheel Control UnibodyValve w/30 Degree Droop Location: [#LOC] | 2552 |
| 4415-1010 | 3" Right Panel Discharge Akron Electric Valve and 9323 Controller w/30 Degree Droop. (Waterous pumps noted location to be forward lower port). Location: [#LOC]. | 4479 |
| 4415-1011 | 3" Right Pump Panel Discharge Akron Electric Valve. Location: [#LOC]. | 4241 |
| 4415-1012 | 3" Right Front Hosebed Akron Electric Valve with 9323 controller. | 4797 |
| 4415-1015 | 3" Right Pump Panel Discharge Akron Electric Valve with 9323 controller. Location: [#LOC]. | 4241 |
| 4415-1016 | 4" waterway discharge with 3" Akron electric valve and 9323 controller. | 4348 |
| 4415-1017 | 2.5" Front Bumper Discharge Akron Electric Valve with 9323 controller. | 3782 |
| 4415-1018 | 2.5" Left Front Hose Bed Akron Electric Valve with 9323 controller. | 3977 |
| 4415-1019 | 2.5" Right Front Hose Bed Akron Electric Valve with 9323 controller. | 3977 |
| 4415-1020 | Double 1.5" Speedlay w/2" Akron Electric Valves with 9323 controllers. | 6356 |
| 4415-1023 | 4" Deck Gun Discharge Outlet with 6" Electric Akron Valve and plumbing. Requires 4" Monitor. | 6788 |
| 4415-1024 | 4" Right Pump Panel Discharge w/3" Akron Electric Valve and 9323 controller include 30 degree droop. (Waterous pumps noted location to be forward lower port) Location: [#LOC] | 4916 |
| 4415-1025 | 5" Right Pump Panel Discharge w/3" Akron Electric Valve. Location: [#LOC]. | 5388 |
| 4415-1026 | 5" Pump Panel Discharge with 4" Akron Electric Valve with 9323 controller. Location: [#LOC]. | 5928 |
| 4415-1027 | 2.5" Front Bumper Discharge Akron Manual Valve and chrome adapter. Location: Through the bumper on Officer side front bumper. | 2113 |
| 4415-1031 | 4" Deck Gun Discharge 6" Electric Akron Valve with 9323 controller and plumbing. Requires 4" Monitor. | 6788 |
| 4415-1032 | 3" Left Panel Discharge Top Mount Akron Electric Valve with 9323 controller. Location: [#LOC] | 4359 |
| 4415-1033 | 3" Left Panel Discharge Top Mount Akron Electric Valve w/9323 controller and 30 Degree Droop (Waterous pumps noted location to be forward lower port) Location: [#LOC] | 4715 |
| 4415-1034 | Triple Speedlay (1) 2.5" and (2) 1.5" with Akron Manual Valve. 2.5" in top location in bed number 1. | 4592 |
| 4415-1035 | 1.5" Rear Driver Side Preconnect Akron gear operator valve hand wheel control for Rear Mount. | 2288 |
| 4415-1036 | 2.5" Right Pump Panel Discharge Akron Manual Valve to be used with Wetside - under tank design only. Location: [#LOC]. | 2518 |
| 4415-1038 | 2.5" Right Pump Panel Discharge Akron Electric Valve to be used on Wetside with under tank design only. Location: [#LOC]. | 4770 |
| 4415-1039 | Double Speedlay (2) 1.5" and Crosslay (1) 2.5" with Akron Manual Valve. | 4775 |
| 4415-1040 | 1.5" Crosslay w/2.5" Elkart Unibody Manual Valve and plumbing Location: [#LOC] | 1327 |
| 4415-1041 | 4" Pump Panel Discharge w/3" Akron Electric Valve & Navigator 9325 to read flow and pressure. (Waterous pumps noted location to be forward lower port). Location: [#LOC]. | 5936 |
| 4415-1042 | 2.5" Single Speedlay with Akron manual valve outlet to terminate below speedlay tray. | 1336 |
| 4415-1043 | 3" Deck Gun Discharge Elkhart Electric Unibody valve UBEC2 to pressure. | 5056 |
| 4415-1044 | 3" Right Pump Panel Discharge UBEC2 Electric Valve with 30 degree droop to read pressure. Location: [#LOC] | 4954 |
| 4415-1045 | Preconnect extension (Each). The front hosebed preconnect to be extended to the rear of the hosebed area. Includes smooth plate cover. Location: second officer side hose bed preconnect is to treminate approx 10" from back edge of hosebed. | 454 |
| 4415-1048 | 3" Rear panel discharge with Akron electric valve and 9323 controller. For use with rear mount pump. Location [#LOC]. | 3544 |
| 4415-1052 | 1.5" Preconnect Discharge Akron Electric Valve with 9325 controller with pressure reading only. Locate (1) L1 and (1) R1. | 4056 |
| 4415-1054 | 2.5" Front Bumper Discharge Akron Manual Valve. Locate 2.5" discharge under front bumper on officer side center under officer side. | 2009 |
| 4415-1055 | 2.5" Crosslay w/2.5" Elkhart Electric Unibody Valve with UICS-2 CAFS Controller with pressure reading. Location: [#LOC]. | 4841 |
| 4415-1056 | 1.5" crosslay with Akron manual valve and no swivel. For use with discharges that locate below the hose beds. Location: [#LOC]. | 1089 |
| 4415-1057 | 4" Left Rear Discharge 4" Elkhart Electric Unibody Valve. | 5001 |
| 4415-1060 | 2.5" Front Bumper Discharge Elkhart Electric Valve with UICS-2 CAFS Controller with pressure reading. | 5258 |
| 4415-1062 | 2.5" rear panel discharge with Akron manual valve with droop. For use with rear mount pump. Location rear pump panel. Location [#LOC]. | 1610 |
| 4415-1063 | 2.5" Right Pump Panel Discharge Akron Manual Valve w/droop to be used with Wetside - under tank design only. Location: [#LOC]. | 2826 |
| 4415-1068 | 1.5" Crosslay w/2" Akron Electric Valves with a Navigator 9325 controller. Include presure sensor for pressure read out only. Location: [#LOC]. | 3995 |

| Item No. | Description | |
|---|---|---|
| 4415-1072 | 4" Pump Panel Discharge Akron Electric with a Navigator 9325 controller. Include presure sensor for pressure read out only. (Waterous pumps noted location to be forward lower port). Location: [#LOC]. | 6104 |
| 4415-1076 | 2.5" Right Pump Panel Discharge Akron Electric Valve to be used on Wetside with under tank design only. Location: [#LOC]. | 4770 |
| 4415-1078 | 2.5" Right Pump Panel Discharge Waterous Manual Hand Wheel Valve. Locate discharge 2. | 3663 |
| 4415-1079 | 2.5" Left Pump Panel Discharge Waterous Manual Hand Wheel Valve. Locate discharge 1 and 2. | 3555 |
| 4415-1080 | 2.5" Left Front Hosebed Discharge Waterous Manual Hand Wheel Valve. Location: left front hosebed. | 3829 |
| 4415-1081 | 2.5" Right Rear Discharge Waterous Manual Hand Wheel Valve. Location: right rear | 3829 |
| 4415-1082 | 1.5" Crosslay w/2.5" Waterous Valve Handwheel Control. | 3671 |
| 4415-1084 | 1.5" front bumper discharge Akron manual valve with chrome adapter through bumper. Location: Driver Side. | 1856 |
| 4415-1085 | 4.5" Right Pump Panel Discharge with 3" Akron Manual Valve Location: [#LOC] | 2505 |
| 4415-1086 | 4" Front Discharge w/4" Elect 9323 Akron Valve and Plumbed Thruogh Front Bumper. | 7448 |
| 4415-1087 | 4" Left Pump Panel Discharge w/4" Akron Electric Valve with 9323 controller. (Waterous pumps noted location to be forward lower port) Location: [#LOC] | 5311 |
| 4415-1089 | 2.5" Single Speedlay with Akron manual valve. | 1465 |
| 4415-1090 | 4" Discharge with 4" Akron Electric valve. The discharge plumbing will be wye into the 5" rear intake plumbing. Where the rear intake can be utilized as a Intake or Discharge. | 5067 |
| 4415-1091 | 2.5" Deck Gun Discharge Akron manual valve. | 1824 |
| 4415-1093 | 2.5" Front Bumper Discharge Akron Manual Valve and chrome adapter. Location: Through the bumper inboard of frame rails. | 2113 |
| 4415-1094 | 3" Right Rear Discharge UBEC3 Electric Valve to read flow and pressure. Location: Right rear. | 7442 |
| 4415-1095 | Triple Speedlay (2) 1.5" and (1) 2.5" with Akron valves hand wheel control. | 7935 |
| 4415-1096 | 2.5" Crosslay Akron Manual Valve. For use with discharges that locate below the hose beds. Location: [#LOC]. | 1313 |
| 4415-1099 | 4" Left Pump Panel Discharge w/4" Akron Electric Valve with 9323 controller. (Waterous pumps noted location to be forward lower port). [#LOC]. | 5311 |
| 4415-1100 | 1.5" Crosslay w/2" Akron Electric Valve with 9325 controller to Read Flow and Pressure. Location: [#LOC] | 4159 |
| 4415-1101 | 2.5" Front Bumper Discharge Akron Electric Valve with 9325 controllerto Read Flow and Pressure. | 6637 |
| 4415-1102 | 2.5" Right Panel Discharge Akron Electric Valve & Navigator Pro 9325 controller w/30 Degree Droop to Read Flow and Pressure. Location: [#LOC] | 5434 |
| 4415-1103 | 2.5" Left Panel Discharge Akron Electric Valve & Navigator Pro 9325 controller w/30 Degree Droop to Read Flow and Pressure. Location: [#LOC] | 5434 |
| 4415-1104 | 3" Front Bumper Discharge Akron Manual Valve. Location; Officer side with a fix 90 degree elbow on top of bumper.. | 3981 |
| 4415-1106 | 1.5" Double Speedlay with Akron Valves with hand wheel controls. | 4881 |
| 4415-1107 | 3" Right Rear Discharge UBEC3 Electric Valve to read flow and pressure. To terminate 2.5" NST. Location: [#LOC]. | 7442 |
| 4415-1108 | 2.5" Single Speedlay with Akron manual valve located at lower storage area offset to front. | 1465 |
| 4415-1110 | 5" Right Pump Panel Discharge with 3" Akron Manual Valve. Include a 4"FNST swivel x 5" Storz 30 degree droop adapter and cap. Location: [#LOC]. | 2708 |
| 4415-1112 | 3.5" Right Panel Discharge with 3" Akron Electric Valve with 9323 controller. Location: Right side pump panel. | 4403 |
| 4417-0000 | Ground Sweep Nozzle | 1668 |
| 4417-0001 | Dual Ground Sweep Nozzles 50 GPM | 1771 |
| 4417-0019 | Fire Shop Bezel Chrome - Side Discharge/Intake | 107 |
| 4417-0020 | Deck Gun Remote TFT 18" Extend-A-Gun electric 3" plumbing. | 4475 |
| 4417-0021 | Deck Gun Remote Ext-a-Gun 4" | 5103 |
| 4417-0026 | Automatic drain valve. For: [#LOC]. | 90 |
| 4417-0030 | Monitor Akron 3578 Electric 2000. | 11060 |
| 4417-0031 | Monitor Akron 3570 Manual 2000 | 4056 |
| 4417-0032 | Monitor Scorpion wireless RF radio 2000 GPM | 12412 |
| 4417-0034 | Deck gun TFT 18" Extend-A-Gun 3" manual operation. | 2232 |
| 4417-0038 | Elkhart Model 8294-06 Monitor with SM-200E Nozzle. Wireless Remote control | 15775 |
| 4417-0039 | Akron DeckMaster 3440 electric 1250 GPM monitor w/stow. | 12886 |
| 4417-0040 | Akron 5177 Akromatic 2.5" master stream nozzle for an Akron 3440 DeckMaster monitor. | 1968 |
| 4417-0041 | Akron 1577 SaberMaster 2.5" Nozzle for an Akron 3440 DeckMaster monitor. | 3762 |
| 4417-0042 | An Akron tether remote control kit with a 30`cable shall be provided for an Akron monitor. Plug for the remote control to be located: [#LOC]. | 1250 |
| 4417-0043 | Task Force Hurricane RC electric 1250 GPM monitor. | 14507 |
| 4417-0044 | Task Force M-ERP-NJ 2.5" master stream electric nozzle for a Hurricane RC monitor. | 2178 |
| 4417-0045 | Elkhart Stinger 8297-25 Manual 800gpm Monitor w/portable base and adapter to mount to deck gun discharge or extend-a-gun | 3596 |

| Item No. | Description | |
|---|---|---|
| 4417-0046 | Elkhart 8500 Vulcan RF monitor with panel mounted and hand held remote controls w/adapter to mount to deck gun discharge or extender. | 7170 |
| 4417-0047 | Elkhart SM-1250E Select-O-Matic 2.5" electric nozzle. | 2723 |
| 4417-0048 | Elkhart 8598 Electrically Actuated Extender. | 3257 |
| 4417-0052 | Extend Specified Hosebed Preconnect up to top of hosebed. Top of preconnect to be below top of hosebed. Location: [#LOC] | 456 |
| 4417-0054 | Preconnect extension (Each). The front hosebed preconnect to be extended to the rear of the hosebed area. Includes smooth plate cover. Location: [#LOC] | 454 |
| 4417-0055 | Superior style cable controls for top mount. | 224 |
| 4417-0057 | Ferrell Compression Fittings for all Discharge and Intake Bleeder Lines | 689 |
| 4417-0059 | Extend Specified Hosebed Preconnect up to mid-point of hosebed. Center of preconnect to be approximately center of hosebed height. Location: [#LOC] | 343 |
| 4417-0062 | Class 1 Cable Style Controls for Top Mount Discharges and Intakes. | 149 |
| 4417-0063 | Class 1 air operated drains (upgrade) for all discharges and intakes. Includes switch on pump panel for each valve. | 140 |
| 4417-0067 | Monitor 4" TFT Monsoon Manual with TFT Master Stream 2000 gpm manual Nozzle. | 7233 |
| 4417-0068 | TFT Tether Kit with 30' Cable for an TFT Monitor Location: [#LOC] | 869 |
| 4417-0073 | Deck Gun TFT 12" Extend-A-Gun 3". | 2232 |
| 4417-0075 | Monitor 4" TFT Monsoon Electric with TFT Master Stream 2000 gpm electric Nozzle. Include panel mount and hand held Remote. | 16335 |
| 4417-0079 | 9304 Akron Navitgator electric valve control. Location: All electric discharge valves IPOS. | 672 |
| 4417-0080 | All 1.5" Threads to be IPT threads | 79 |
| 4417-0081 | Vented caps and plugs for all discharges/intakes. | 654 |
| 4417-0082 | Deck Gun Remote 12" Extend-A-Gun 3" Plumbing. | 4475 |
| 4417-0083 | Elkhart 8297F Stinger RF Monitor with Panel Mounted and Hand-Held Remote Controls w/adapter to mount to deck gun discharge or extender | 10205 |
| 4417-0086 | Task Force Typhoon RC Electric Monitor with 1500gpm nozzle. Include Radio Remote Control | 15290 |
| 4417-0088 | Bleeder drain valve plumbed to: [#LOC]. | 130 |
| 4417-0090 | Additional control for deck gun electric valve locate adjacent to the discharge outlet. | 1938 |
| 4417-0092 | Task Force Typhoon RC Electric Monitor without nozzle. Include Radio Remote Control (Require Nozzle) | 12272 |
| 4417-0097 | Innovative Controls Push/Pull Valve Control Handles IPOS. | 57 |
| 4417-0099 | Akron Wireless Deck Gun Remote Monitor Controller. | 1788 |
| 4417-0100 | Akron 3600 Wireless Remote Control. | 1919 |
| 4417-0102 | Akron DeckMaster 3440 Electric 1250gpm Monitor w/Stow. With 30' Tether controller located in pump panel operator compartment. | 13557 |
| 4417-0119 | Task Force Hurricane RC Electric Monitor with a Master Stream 1250 GPM nozzle. Includes wireless Radio Remote Control. | 13579 |
| 4417-0124 | Akron 3406 Electric Riser. | 3915 |
| 4417-0125 | Deck gun TFT 18" Extend-A-Gun 3". (MODEL XG18VL-XL) for crossfire monitor. | 2232 |
| 4417-0127 | Chrome discharge elbow 3"FNST x 2.5"MNST 30 Deg [#LOC]. | 286 |
| 4417-0129 | Left side 2.5" pump panel discharges on Waterous pump to be side by side. For use with Side Mount Pump Module. | 908 |
| 4417-0130 | Task Force Tip Hurricane XFI-PLNJ Manual Monitor with MST-4NJ-2.5"NH Quad Stack Tips and M-R1000-NJ Automatic Nozzle. | 4114 |
| 4417-0135 | Addition Automatic drain valve. For: front bumper discharge. Loction under front bumper at lowest point. | 90 |
| 4417-0138 | Officer side pump panel shall have polished stainless steel split escutcheon plates mounted in place for each discharge/intake. The escutcheon plates will be fastened in place to allow quick disassembly to permit the hinge to operate. | 271 |
| 4417-0140 | Crosslay 1 valve control to be electric 9313 comtroller. | 2073 |
| 4417-0143 | Lever controls to be Innovative Controls T-handle Top Mmount Valve Controls. | 46 |
| 4417-0147 | Special piping run for 2.5" bumper discharge. Run piping thru back wall of center tray down low offset to officer side (approximately 1" clearance between pipe and officer side tray wall) run piping into tray approx halfway then 90 degrees up to top of gravel shield. | 208 |
| 4417-0149 | Akron DeckMaster 3440 electric 1250 GPM monitor w/stow package. Include 1577 SaberMaster 2.5" Nozzle and 3600 Wireless Remote Control. (DND OF CANADA) | 16070 |
| 4417-0150 | Manual override access hole to be supplied in officer's side pump panel to access the override on the 4" discharge .Wrench required for manual override shall be located in vicinity of access panel. | 95 |
| 4417-0153 | Elkhart Cobra EXM monitor with panel mounted and hand-held remote controls w/adapter to mount to deck gun discharge or extender. Include SM-1250E nozzle and EXM stow module. | 12486 |
| 4417-0154 | Additional electric controller for discharge electric valve locate adjacent to the outlet. Locate.[#LOC]. | 1938 |
| 4417-0158 | Deck Gun Discharge piping shall be extended flush with top of booster reels. | 291 |

| Item No. | Description | |
|---|---|---|
| 4417-0159 | Monitor Scorpion 8294-02 Monitor w/2000 GPM Nozzle and ST-195 stacked tips (tips shipped loose). | 10222 |
| 4417-0160 | Thread Type: All 1.5" discharges to be NEW CHICAGO FD 1.933 x 11 1/2 threads per inch. All 2.5" inlets and intake releif valve dump pipe to be 2.99 x 7 1/2 NEW CHICAGO FD threads per inch. | 601 |
| 4417-0162 | Akron DeckMaster 3440 UII CAN electric 1250 GPM monitor w/stow. | 12886 |
| 4417-0163 | Additional control for deck gun valve handwheel control locate adjacent to discharge outlet. Hand wheel to be extended to top of pan. | 1610 |
| 4417-0164 | Deck Gun Discharge Piping. The deck gun discharge piping shall terminate 11" above storage pan floor with a 4 bolt flange. (NOT TO AFFECT OAH W/8297 MONITOR) | 184 |
| 4417-0165 | Elkhart 8500 Vulcan Monitor Hand Wheel Control. | 2648 |
| 4417-0166 | Monitor 3" TFT Monsoon Electric with TFT Master Stream 1500 gpm electric Nozzle. Include panel mount and hand held Remote. | 12802 |
| 4417-0171 | Deck Gun Pipe. The piping for the deck gun shall terminate with a 4 bolt flange. | 184 |
| 4417-0178 | Task Force Tip Hurricane Manual Monitor XFIH-D61A female NPT thread for use with Manual Extend-a-gun. | 1758 |
| 4417-0179 | Task Force 2.5 Master Stream 1250 Series M-R1250-NJ Manual Nozzle | 1547 |
| 4417-0180 | Task Force Tip Hurricane XFIH- Manual Monitor with MST-4NJ-2.5"NH Quad Stack Tips and M-R1250-NJ Automatic Nozzle. | 4114 |
| 4417-0182 | TM Valve controls to be Innovative Controls T-handles with grip activitated lock. | 50 |
| 4417-0183 | Monitor Scorpion 8294-02 Monitor w/2000gpm Nozzle. | 9992 |
| 4417-0184 | TM Valve controls to be Innovative Controls T-handles with grip activitated lock and cable actuators. | 185 |
| 4417-0185 | Innovative Controls discharge and intake bezels with integral color code and verbiage for side mount pump panel. | 544 |
| 4417-0186 | Innovative Controls discharge and intake bezels with color code and verbiage for top mount pump panel. | 350 |
| 4417-0188 | TM Valve controls to be Innovative Controls Twist-Lock handles. | 50 |
| 4417-0189 | Deck gun TFT 12" Extend-A-Gun 3". With XL connection for a TFT monitor. | 2232 |
| 4417-0192 | Innovative Controls discharge and intake bezels with integral color code and verbiage for rear mount pump panel. | 373 |
| 4417-0193 | Extend Driver Hosebed up 16" from hosebed floor. | 456 |
| 4417-0196 | Task Force Tip Hurricane XFIH-DL1A Manual Monitor with MST-4NJ-2.5"NH Quad Stack Tips and M-R1250-NJ Automatic Nozzle. | 4452 |
| 4417-0197 | The crosslay preconnects shall be mounted vertical approximately 1" below the top of the pump module xlay when installed. Preconnect #1 will deploy off driver side and preconnect #2 will deploy off officer side. | 130 |
| 4417-0200 | Chrome discharge elbow 3"FNST x 2.5"MNST 45 Deg with cap. | 272 |
| 4417-0203 | Innovative Controls discharge and intake bezels with integral color code and verbiage for AP50 pump. | 135 |
| 4417-0204 | Trident Hand Wheel Control.(In place of standard push/pull rod.): Location [#LOC]. | 1131 |
| 4417-0206 | Innovative Controls 3/4" Bleeder drain valve plumbed to: direct/inlet tank fill. | 130 |
| 4417-0208 | Elkhart Cobra EXM monitor with panel mounted and hand-held remote controls w/adapter to mount to deck gun discharge or extender. Include ST-194 stack tips and EXM stow module. | 10281 |
| 4417-0209 | Monitor Akron 3480 Electric StreamMaster II with 5178 2000gpm electric nozzle. | 13825 |
| 4417-0213 | Discharge elbow 2.5"FNST x 2.5"MNST 45 Deg to be painted job color. | 272 |
| 4417-0214 | Monitor Akron 3480 Electric StreamMaster II 2000gpm with 5178 nozzle. Include a panel mount control with stow and hand held wireless remote control. | 14155 |
| 4417-0216 | Superior style cable controls for side mount. | 286 |
| 4417-0220 | Akron 5075 Akromatic 2.5" master stream nozzle for an Akron 3440 DeckMaster monitor. | 1968 |
| 4417-0221 | Thread Type: All 1.5" discharges to be NYFD threads. | 357 |
| 4417-0222 | Extend-a-Gun piping shall terminate with 4 bolt flange and be position in storage pan so it don't affect OAH w/8297 MONITOR. | 184 |
| 4417-0224 | Additional control for deck gun valve push/pull control locate adjacent to discharge outlet. | 875 |
| 4417-0226 | A sensor shall be located at the monitor that signals the door ajar light in the cab to indicate that the monitor is raised. | 271 |
| 4417-0229 | The Akron electric controller to have Lexan guardr cover. (SEE PICTURE IN FILE) | 126 |
| 4417-0233 | Monitor Akron 3483 Manual with 5160 nozzle. | 6912 |
| 4417-0235 | Akron DeckMaster 3440 UII CAN electric 1250 GPM monitor w/stow. 1577 SaberMaste 1250gpm nozzle. | 15602 |
| 4417-0238 | Trident 6" Hand Wheel Control.(In place of standard push/pull rod.): Location [#LOC]. | 1341 |
| 4417-0239 | Rack and Sector Actuator Control.(In place of standard.): Location right side 2.5" discharge and left front hosebed. | 291 |
| 4417-0240 | Task Force Tip Hurricane XFIE-FLNJ Manual Monitor with MST-4NJ-2.5" NH and M-R1250-NJ Automatic Nozzle. | 3694 |
| 4417-0241 | Akron Apollo (3433) High Rise Monitor. Include lift off and direct mount only. Include Hi-Riser direct mount base. | 4276 |

| Item No. | Description | |
|---|---|---|
| 4420-0026 | Williams "75 Lb. Dry Chemical Skid Unit w/4500 PSI Air-pack Bottle.Locate in [#LOC]. | 7242 |
| 4430-0008 | Advent 30 Foam System for a Single Foam Tank | 22471 |
| 4430-0009 | Advent 60 Foam System for a Single Foam Tank | 26713 |
| 4430-0010 | Advent 120 Foam System A and B Type | 34262 |
| 4430-0011 | 1600 Rockwood Around The Pump Foam System | 4719 |
| 4430-0013 | Williams 1500 Around-The-Pump foam system. | 8007 |
| 4430-0014 | Hale 2.1A FoamLogix foam system. | 7954 |
| 4430-0015 | Hale 3.3 FoamLogix foam system. | 16897 |
| 4430-0016 | 5.0 Hale FoamLogix Foam System. | 19049 |
| 4430-0017 | 400 Rockwood around the pump foam system. | 3554 |
| 4430-0018 | 1600 Hypro/FoamPro foam system. | 9226 |
| 4430-0019 | 2001 Hypro/FoamPro foam system. | 14985 |
| 4430-0020 | 2002 Hypro/FoamPro foam system. | 19100 |
| 4430-0022 | Hot Shot II 150 Foam System. | 57582 |
| 4430-0023 | Hot Shot II 300 Foam System | 61271 |
| 4430-0031 | Eclipse Compressed Air Foam System 1000 GPM Manifold w/2002 FoamPro. | 89146 |
| 4430-0039 | Eclipse Compressed Air Foam System 500 GPM Manifold w/2001 FoamPro | 83127 |
| 4430-0041 | WATP 500 A/B Foam System Include 1.5" Foam pick up. | 10950 |
| 4430-0042 | Advent 12 Foam System for a Single Foam Tank | 22238 |
| 4430-0043 | Advent 12 Dual Foam System for Dual Foam Tanks | 24415 |
| 4430-0045 | 95 GPM Akron Foam Eductor. Location: [#LOC]. | 2442 |
| 4430-0046 | 125 GPM Elkhart Foam Eductor Location: [#LOC] | 3045 |
| 4430-0047 | 125 GPM Akron foam eductor. Location: [#LOC]. | 2790 |
| 4430-0048 | 95 GPM Elkhart Foam Eductor Location: [#LOC] | 2778 |
| 4430-0051 | Advent 30 Dual Foam System for Dual Foam Tanks | 27632 |
| 4430-0052 | CAFSPRO with 3.3 Foam Logix Compressed Air Foam System with 750gpm Manifold | 67093 |
| 4430-0053 | CAFSPRO with 5.0 Foam Logix Compressed Air Foam System with 750gpm Manifold | 68233 |
| 4430-0056 | 125 GPM Elkhart Foam Eductor w/air actuated foam valve Location: [#LOC] | 3675 |
| 4430-0057 | 125 GPM Akron Foam Eductor w/air actuated foam valve. Location: [#LOC]. | 3271 |
| 4430-0058 | Hot Shift Clutch - Required with CAFS system | 3330 |
| 4430-0059 | Eclipse Compressed Air Foam System 500 GPM Manifold w/2002 FoamPro. | 87243 |
| 4430-0060 | CAFSPRO 5.0 FoamLogix Compressed Air Foam System with 1000 GPM manifold. | 70084 |
| 4430-0061 | FoamPro 3012 foam system hydraulics PTO driven. | 25412 |
| 4430-0062 | Advent 120 Foam System single | 31397 |
| 4430-0063 | FoamPro 3040D Foam System with elect/hyd drive. | 43997 |
| 4430-0066 | Foam Tank To Pump 1" Air/Act for Dealer install foam system. | 931 |
| 4430-0070 | 125 GPM Akron Simple Apparatus Foam System | 1775 |
| 4430-0071 | 1500V Williams A/B Around The Pump foam system. Include A/B tanks control. | 9851 |
| 4430-0073 | 1.5 Feecon Around The Pump Foam System | 4796 |
| 4430-0075 | 2.0 Feecon Around The Pump Foam System | 4936 |
| 4430-0076 | Eclipse Waterous Compressed Air Foam System 1000 GPM Manifold. | 70051 |
| 4430-0077 | Waterous Advantus 6.0 Foam System | 21438 |
| 4430-0078 | Classic 140 Compressed Air Foam System. Shall include (5) Discharge outlets (1) 2.5" Left Hosebed Preconnect Discharge (2) 1.5" Crosslay outlets and (2) booster reels. | 46537 |
| 4430-0079 | The foam system performance shall be tested and certified in compliance with the applicable NFPA 1901 requirements. | 321 |
| 4430-0080 | The balanced pressure foam system performance shall be tested and certified in compliance with 2009 NFPA 1901. | 639 |
| 4430-0081 | 1500 Williams Around The Pump Foam System Up Graded to 2000gpm at 3% | 3124 |
| 4430-0087 | Advent 60 Foam System for a dual Foam Tank. | 32576 |
| 4430-0089 | The main pump manifold to have water loop for dealer installed foam system (Class A Foam System) to noted preconnects/discharges | 827 |
| 4430-0093 | Venom 5.0 Hypro/Foam Pro Foam System. | 19584 |
| 4430-0094 | Advent 12 Elecrict (230) Dual Foam System for Dual Foam Tanks | 27773 |
| 4430-0107 | WATP 500 B Foam System. Includes 1.5" Foam pick-up. | 9212 |
| 4430-0108 | FRC MFA200 Class A around the pump foam system. | 2923 |
| 4430-0109 | Waterous Advantus 3.0 foam system. | 15588 |
| 4430-0112 | 125 GPM Akron Foam Eductor w/manual panel mount 1/4 turn foam valves (1) for A tank and (1) for B tank. Location: [#LOC] | 3616 |
| 4430-0113 | The foam system shall be factory tested at minimum maximum and midrange. | 321 |
| 4430-0114 | Eclipse Compressed Air Foam System 3" Manifold w/Advantus 6.0 Foam system. | 82397 |
| 4430-0115 | 125 GPM Akron foam eductor system with air actuation for both foam eductor and foam supply valve. Location: [#LOC]. | 4106 |
| 4430-0116 | FoamPro 3040 Foam System hyd drive. (FoamPro Low Flow 130gpm at 3%) | 43590 |
| 4430-0117 | 1500V Williams A/B Around The Pump Foam System with Single Tank and Aux Pickup to be use for Class A or Class B foam inlet. | 10464 |

| Item No. | Description | |
|---|---|---|
| 4430-0118 | FoamPro AccuMax 3040 Foam System hyd drive with Multi-Piont Injection and low flow option. | 43590 |
| 4430-0119 | FoamPro AccuMax 3040 Foam System hyd drive with Multi-Piont Injection and low flow option. | 44022 |
| 4430-0120 | 1500V Williams Manual A/B Around The Pump foam system with pickup. Include manual A/B tanks control with manual .75 flush valve. | 9910 |
| 4430-0122 | 1601 Hypro/FoamPro foam system. | 8447 |
| 4430-0123 | FoamPro AccuMax 3060 Foam System hyd drive with Multi-Piont Injection Manual Override and low flow option. Includes "Auto-Start" system. | 67436 |
| 4430-0128 | Hale SmartCAFS 5.0 FoamLogix Compressed Air Foam System with 1000 GPM manifold. | 69543 |
| 4430-0130 | Waterous 200-P PTO Platinum Compressed Air Foam System | 31068 |
| 4430-0131 | Waterous 140-P PTO Platinum Compressed Air Foam System | 30298 |
| 4430-0132 | Waterous 80-P PTO Platinum Compressed Air Foam System | 23139 |
| 4430-0133 | Darley 150 ODIN Compressed Air Foam System. | 22567 |
| 4430-0134 | FoamPro 2002ELECT/3060HYD Foam System. FoamPro 2002 system for Class A low flow and 3060 system for high flow Class B faom. (HILLSBOROUGH COUNTY) | 54803 |
| 4430-0135 | 125 GPM Akron Foam Eductor w/manual panel mount 1/4 turn foam valves. Include push/pull for foam eductor Location: [#LOC] | 3392 |
| 4430-0136 | Darley 150-PTO Compressed Air Foam System | 28686 |
| 4430-0137 | 95 GPM Akron Foam Eductor Air Actuated. Plumb to both 1.5" preconnects. | 3230 |
| 4430-0139 | 95 GPM Akron Foam Eductor w/air actuated foam valve. Location: [#LOC]. | 3230 |
| 4430-0140 | Williams 1500 Around-The-Pump foam system. Include air actuated aux foam inlet valve IPOS control at operator panel. | 8277 |
| 4430-0142 | Advent 30 Foam System for a Single Foam Tank | 35211 |
| 4430-0144 | 1.5 Feecon Around The Pump Foam System | 9122 |
| 4430-0145 | FRC TurboFoam TFC400 foam system. Include FRC A/B Electric Selector. | 22584 |
| 4430-0147 | Waterous One Step Compressed Air Foam System with Advantus 3.0 foam system. | 97469 |
| 4430-0148 | FoamPro Turbo Ultra High Pressure foam system with a Dual-Action spray gun. Include booster reel model E1520-17-18 with 100' of 5/8" high pressure hose. Location L1. | 8802 |
| 4430-0149 | 125 GPM Akron foam eductor system with air actuation foam eductor. Location: [#LOC]. | 3986 |
| 4432-0001 | Akron 5178 Electric 2000 GPM Nozzle. | 2568 |
| 4432-0002 | Akron 5070 Manual 2000 GPM Nozzle | 1975 |
| 4432-0003 | Elkhart SM2000 Electric Nozzle | 2553 |
| 4432-0009 | Hot Shot Ratio Controller 2" Discharge. Plumbed to: [#LOC]. | 2353 |
| 4432-0010 | Hot Shot Ratio Controller 2.5" Discharge. Plumbed to: [#LOC]. | 2421 |
| 4432-0011 | Hot Shot Ratio Controller 3" Discharge. Plumbed to: [#LOC]. | 2499 |
| 4432-0012 | Advent Ratio Controller 2" Discharge. Plumbed to: [#LOC] | 1926 |
| 4432-0013 | Advent Ratio Controller 2.5" Discharge. Plumbed to: [#LOC] | 1929 |
| 4432-0014 | Advent Ratio Controller 3" Discharge. Plumbed to: [#LOC] | 1958 |
| 4432-0015 | Advent Ratio Controller 4" Discharge. Plumbed to: [#LOC] | 2169 |
| 4432-0016 | Advent Ratio Controller 5" Discharge. Plumbed to: [#LOC] | 3954 |
| 4432-0019 | Foam Pro Remote Start Switch | 781 |
| 4432-0020 | Eclipse 1.5"/3.0" Compressed Air Foam System Discharge Kit. Location: [#LOC]. | 25 |
| 4432-0022 | 1.5" Compressed Air Foam System Discharge Kit Location: [#LOC] | 376 |
| 4432-0023 | 2.0" Compressed Air Foam System Discharge Kit. Location: [#LOC]. | 379 |
| 4432-0024 | 2.5" Compressed Air Foam System Discharge Kit. Location: [#LOC]. | 382 |
| 4432-0025 | 3.0" Compressed Air Foam System Discharge Kit Location: [#LOC] | 427 |
| 4432-0026 | 3" Deck Gun Discharge Eclipse Compressed Air Foam System | 4177 |
| 4432-0027 | 3" Deck Gun Compressed Air Foam System | 4537 |
| 4432-0028 | Pump foam transfer 15 GPM 12 volt mounted in vehicle body. Activation switch operated from driver's side pump panel ARFF. | 2306 |
| 4432-0036 | A/B Hypro/FoamPro manual foam selector. | 2520 |
| 4432-0037 | A/B Class 1 manual foam selector. | 3638 |
| 4432-0045 | Hot Shift Clutch | 3428 |
| 4432-0054 | Akron Quick Disconnect Foam Pickup Tube on Driver's Side Pump Panel for Eductor. Located on: [#LOC]. | 529 |
| 4432-0055 | Elkhart Quick Disconnect Foam Pickup Tube on Driver's Side Pump Panel for Eductor Located on: [#LOC] | 752 |
| 4432-0056 | Hale EZ-Fill foam system for a single foam tank. Includes clear hose wand (shipped loose). Controller and connection port located [#LOC]. | 3096 |
| 4432-0057 | Hale EZ-Fill foam system for dual foam tank. Includes clear hose wand (ship loose). Controller and connection port located [#LOC]. | 3493 |
| 4432-0058 | Akron quick-disconnect foam pickup tube on officer's side pump panel for eductor. Located on: [#LOC]. | 529 |
| 4432-0059 | Elkhart Quick Disconnect Foam Pickup Tube on Officer's Side Pump Panel for Eductor Located on: [#LOC] | 752 |
| 4432-0060 | Label for ATP foam systems. | 39 |

| Item No. | Description | |
|---|---|---|
| 4432-0061 | FoamPro foam system refill. Includes clear hose wand (ship loose). Controller and connection port located [#LOC]. | 3500 |
| 4432-0063 | Hale FoamLogix air actuated A/B selector. | 4117 |
| 4432-0064 | Hypro FoamPro electric actuated A/B selector. | 3864 |
| 4432-0065 | 3" Deck Gun CAFSPRO Compressed Air Foam System. | 7236 |
| 4432-0066 | Additional 3/4" Foam Tank Valve for 95 Eductor and Dual Foam Cells | 510 |
| 4432-0070 | Hot Shot Ratio Controller 4" Discharge. Plumbed to: [#LOC]. | 3334 |
| 4432-0071 | Foam Pickup 2" on Driver's Side Pump Panel for 3040D Foam System with Pickup Tube.(Montreal only) | 1225 |
| 4432-0072 | Foam Tank Fill 1.5" Air Act for a 3040D Foam System.(Montreal only) | 707 |
| 4432-0074 | .375 Foam Maniflod Drain | 149 |
| 4432-0075 | FoamPro Advanced Digital Controller "auto start". | 152 |
| 4432-0076 | Foam Pickup 2" on Officer's Side Pump Panel for 3040D Foam System with Pickup Tube.(Montreal only) | 1225 |
| 4432-0077 | Foam Pickup 10 feet with 1.0 PVC Clear Spiraflex Hose IPOS | 267 |
| 4432-0078 | Foam tank drain plumbed to side panel with valve and 3/4" male garden hose connection. To allow filling of remote foam unit and pails from tank. | 957 |
| 4432-0079 | A/B Class 1 Manual Foam Selector | 3638 |
| 4432-0080 | Special CAFS/FOAM Manifold for (4) preconnects Deck Gun and 3" Right Rear discharge. | 6690 |
| 4432-0082 | Foam Pickup 2" on Side Pump Panel. With Manual valve and Pickup Tube. | 890 |
| 4432-0083 | Deck Gun Foam Tank To Pump Connection Provide a Manual 1.5" Valve Locate Next to Deck gun outlet. | 893 |
| 4432-0089 | CAFS Manual Air Valve to be .3/4" Valve in place of standard. | 154 |
| 4432-0090 | CAFS/Foam System Operation Label "Operate only (2) 1 3/4" Discharges or (1) 2 1/2" at a time" | 204 |
| 4432-0091 | Special design 5" foam/water manifold with check valves. | 4259 |
| 4432-0092 | FoamPro Remote Start/Stop in cab.MultiFlo Interface and Dual Injection control located on operator panel. | 7863 |
| 4432-0093 | Hot Shot Ratio Controller 5". Plumbed to: [#LOC]. | 3398 |
| 4432-0094 | Waterous Electric Actuated A/B Selector. | 3697 |
| 4432-0097 | .75" Foam Manifold Drain with 1/4 turn valve. | 510 |
| 4432-0098 | Eclipse Waterous TC20 T-Case W/Compressed Air Foam System. For a S1OOD Waterous pump. | 59028 |
| 4432-0099 | Foam System Plumbed to [#LOC]. | 335 |
| 4432-0100 | 2.0" Compressed Air Foam System Discharge Kit with Electric actuated 1/2" valve. Location: [#LOC]. | 416 |
| 4432-0101 | 2.5" Compressed Air Foam System Discharge Kit with Electric actuated 3/4" valve. Location: [#LOC]. | 420 |
| 4432-0104 | Hale Manual Single Foam Flush System. | 1288 |
| 4432-0105 | A/B Foam Selector locate Driver side walk way recess in box on diamond plate panel at front of module. | 194 |
| 4432-0108 | Hot Shot Ratio Controller 5" Discharge with adjustable metering valve. Plumbed to: [#LOC] | 3398 |
| 4432-0109 | Hot Shot Ratio Controller 3" Discharge with adjustable metering valve. Plumbed to: [#LOC] | 2499 |
| 4432-0110 | Hot Shot Ratio Controller 2" Discharge with adjustable metering valve. Plumbed to: [#LOC] | 2353 |
| 4432-0113 | Foam Intake Test Port Locate on the intake side of pump between the strainer and the pump bulkhead fitting is to be on operator pump panel. | 107 |
| 4432-0114 | Foam testing. The foam system shall be calibrated for 1 X 3 Thunderstrom foam AR-AFFF concentrate. The foam propotioning system shall provide .25% .5% 1% and 3% foam solutions within the allowable concentration ranges required in NFPA #1901. Each percentage shall be tested at a high and low flow and a revit shall be install at mid point.. | 2294 |
| 4432-0115 | Foam ready manifold for a Hale FoamLogix or a FoamPro system with 3" plumbing feeding the manifold so the dealer can install the Hale or FoamPro manifold. | 972 |
| 4432-0117 | 1.5" FNST Hydro- Foam Aux Foam pickup. The 1.5" FNST foam inlet fitting shall be located on officer side pump panel with a electic over air control valve. And be control at the operator panel. | 1545 |
| 4432-0118 | Foam Strainer Pump Panel Mount with 1" connection ports and 2.5" NST cap. (IPOS strainer for foam system.) | 1183 |
| 4432-0119 | Foam Strainer Pump Panel Mount with 1" connection ports and 2.5" NST cap. (For Foam Refill) | 1183 |
| 4432-0120 | Special 5" FOAM Manifold for all discharge outlets to plumb to foam. | 3623 |
| 4432-0121 | Foam Tank Supply/Flush 1" valves will be electric control operated through the V-MUX system. The flush valve to be located as close to foam tank supply valve as possible. A manual flush drain .75" valve will be located under the officer's side running board. | 1158 |
| 4432-0122 | A 1.50" x 10' reinforced concentrate hose and stinger shall be provided with NST threads to connect to the foam inlet as (shipped loose) for auxiliary foam operations. | 314 |
| 4432-0123 | Eclipse 1.5"/3.0" Compressed Air Foam System Discharge Kit Location: [#LOC] | 600 |
| 4432-0125 | 6" Ratio Controller for Hot Shot II System. Include metering valve. Location: [#LOC]. | 4366 |
| 4432-0134 | Eclipse 1.5"/3.0" Compressed Air Foam System Discharge Kit. Location: [#LOC]. | 335 |

| Item No. | Description | |
|---|---|---|
| 4432-0135 | CAFS Audible w/light Low Air Alarm shall be tied into the CAFS air system. If it drop below 90PSI the alarm aviate. | 399 |
| 4432-0137 | Hot Shot Ratio Controller 6" Discharge with adjustable metering valve. Plumbed to: [#LOC] | 4708 |
| 4432-0138 | Hot Shot Ratio Controller 2.5" Discharge with adjustable metering valve. Plumbed to: [#LOC] | 3387 |
| 4432-0151 | FoamPro aux foam fill kit. Include check valve level sensor placard and camlok connection. | 818 |
| 4432-0152 | 1.5" Foam Tank to pump Electric/Air Actuated. With a guard switch cover adjacent to the foam control display. | 1137 |
| 4432-0153 | CAFS system water drain shall be extended out to pump panel. | 259 |
| 4432-0159 | CAFs system drains shall be extended to the officer's side pump panel area. | 390 |
| 4432-0160 | 3" Compressed Air Foam System Discharge Kit with Electric actuated 3/4" valve. Location: [#LOC] | 485 |
| 4432-0161 | 1.5" Compressed Air Foam System Discharge Kit with Electric actuated 1/2" valve. Location: [#LOC] | 415 |
| 4432-0162 | 6" High Flow Ratio Controller for Hot Shot II System. Includes metering valve. Location: [#LOC]. | 4365 |
| 4432-0163 | 1.5" Foam Tank to pump Air Actuated. With a guard switch cover adjacent to the foam control display. | 1136 |
| 4432-0164 | Waterous Electric Actuated A/B Selector. A to be plumb to the foam tank and B to be plumb to the left pump panel for an aux foam pick-up. | 3697 |
| 4432-0165 | Special design foam/water manifold to allow dealer supplied foam system to be plumbed to crosslay 1 crosslay 2 and rear discharge so they are foam ready. | 4259 |
| 4432-0166 | Special design 4" foam manifold with check valve to prevent foam from back flowing into the water pump. Include 4" Check valve with 4" plumbing and drain. | 1867 |
| 4432-0167 | FoamPro 1/2" Line Controller plumbed to [#LOC]. | 7980 |
| 4432-0168 | Auto on power-up mode which automatically come on with pump in gear. | 152 |
| 4432-0169 | Advent Ratio Controller 2" Discharge. Special Orifice size .10 .250 .500 1.0 and 3.0% Plumbed to: [#LOC] | 1926 |
| 4432-0170 | Advent Ratio Controller 2.5" Discharge. Special Orifice size .10 .250 .500 1.0 and 3.0% Plumbed to: [#LOC] | 1929 |
| 4432-0171 | Advent Ratio Controller 3" Discharge. Special Orifice size .10 .250 .500 1.0 and 3.0% Plumbed to: [#LOC] | 1958 |
| 4432-0172 | Advent Ratio Controller 4" Discharge. Special Orifice size .10 .250 .500 1.0 and 3.0% Plumbed to: [#LOC] | 2169 |
| 4432-0173 | An Elkhart quick-connect foam outlet with pick-up tube assembly permits foam from on-board tank supply or to a 5 gal. pails/buckets. For portable eductor. Install one on each side pump panel. | 2025 |
| 4432-0176 | A Elkhart quick-connect foam outlet with pick-up tube assembly permits foam from on-board tank supply or to a 5 gal. pails/buckets. For portable eductor. Location: [#LOC]. | 1015 |
| 4432-0177 | FoamPro 3/4" Line Controller plumbed to [#LOC]. | 7980 |
| 4432-0178 | Foam tank fill 1"electric line controllert for a foam system. | 957 |
| 4432-0179 | A Elkhart quick-connect foam outlet with pick-up tube assembly permits foam from on-board tank supply or to a 5 gal. pails/buckets. For portable eductor. Location: [#LOC]. | 873 |
| 4432-0180 | Foam Flush with 1/4" valve. Locate inside driver side upper pump access door rearward. | 510 |
| 4432-0182 | Extended warranty for Waterous CAFS compressor - 4 Years in addition to the standard 1 year warranty (parts only). | 2893 |
| 4432-0183 | Hinged stainless steel switch guard cover for foam system air control switch Location on pump operator panel. | 130 |
| 4432-0185 | Foam Flush System. | 123 |
| 4432-0187 | Addition Foam Flush System. A 3/4" valve with garden hose bib connection mounted in pump compartment (1) for 2002 and (1) for 3060 system. They will be plumb to the foam supply line for flushing of the system. A check valve prevents water from entering the foam tank when the system is not being flushed. | 470 |
| 4432-0188 | Aux 2" foam system intake with swing handle. Locate to be driver side pump panel. | 1234 |
| 4432-0189 | CAFS Compressor "Auto On". | 152 |
| 4432-0190 | .75" Foam Manifold Drain with lift lever 1/4 turn valve. | 349 |
| 4432-0191 | FoamPro off-board pickup. Includes clear hose wand (ship loose). Controller on operator panel and connection port located [#LOC]. | 3696 |
| 4432-0193 | Foam ready Manifold for a Hale Foam Logix or a Foam Pro system- plumbed to front jumpline bottom 1.75" speedlay and officer side 2.5" discharge. W/3" plumbing. | 2184 |
| 4432-0196 | A CAFS Compressor RPM interlock indicator light and label shall be on the pump operator panel. Indicator light will come on when engine RPM is to high to engage CAFS PTO. | 85 |
| 4432-0198 | Dual discharge port "Y" togehter plumb to 4" foam loop feeding the foam manifold to prevent friction loss and to keep pump head pressure to a minimum. | 163 |
| 4432-0207 | Hale EZ-Fill foam system for a single foam tank with dual pickup (1) left and (1) right pump panel. Includes clear hose wand (shipped loose). Controller to be located on left pump panel. | 3569 |
| 4432-0208 | Foam tank B outlet valve shall have rubber hood latch as a secondary lock. | 210 |
| 4432-0211 | All foam service/drain valves to be brass or stainless steel IPOS. No PVC valves to be used. | 539 |

| Item No. | Description | |
|---|---|---|
| 4432-0212 | Foam tank outlet 1.5" plumbed to pan. Include 1.5" valve manual control with cam-lock fiiting and cap located in the pan off set to officer side rearward. (Dealer supply HYDRO foam nozzle. | 1188 |
| 4435-0001 | Class 1 Intelli-Tank water tank level gauge. On pump panel. | 545 |
| 4435-0002 | Class 1 Intelli-Tank foam tank level gauge. On pump panel. | 563 |
| 4435-0003 | Class 1 Intelli-Tank/Whelen 500 LED water tank level gauge package. Location of Whelen 500 tank level lights: [#LOC]. | 4404 |
| 4435-0004 | Sight Tube Water Tank Level Gauge. Located driver's side front of body. | 561 |
| 4435-0005 | Innovative Controls 5 Water Tank Level Gauge | 512 |
| 4435-0006 | Innovated Contols 5 Foam Tank Level Gauge | 799 |
| 4435-0007 | Class 1 Water Bar graph style Tank Level Gauge. | 856 |
| 4435-0008 | Class 1 foam Bar graph style Tank Level Gauge. | 1134 |
| 4435-0009 | Fire Research TankVision model WL2600 Class A foam tank level gauge. | 1053 |
| 4435-0010 | Fire Research TankVision model WL2000 water tank level gauge. | 917 |
| 4435-0011 | Fire Research TankVision model WL2700 B foam tank level gauge. | 1052 |
| 4435-0012 | Pump overheat indicator. | 405 |
| 4435-0013 | 4.5" Class 1 compound pressure gauge (30-0-600 PSI). | 215 |
| 4435-0014 | Dual Read 4.5" Pressure Gauge (30-0-600 psi/100-0-4000 KPA). | 322 |
| 4435-0015 | 2.5" Class 1 compound pressure gauge (30-0-600). Discharge(s): [#LOC]. | 155 |
| 4435-0016 | Dual Read 2.5" Pressure Gauge (30-0-600 psi/100-0-4000 KPA). Discharge: [#LOC]. | 218 |
| 4435-0018 | Dual Read 3.5" Pressure Gauge (30-0-600 psi/100-0-4000 KPA). Discharge: [#LOC] | 296 |
| 4435-0019 | 3.5" Class 1 compound pressure gauge (30-0-600). Discharge: [#LOC]. | 186 |
| 4435-0020 | MC Products gauge heater line controls and strips for 4 gauges. | 828 |
| 4435-0021 | Gauge heater strips additional (EA). | 159 |
| 4435-0022 | 6" NoShok pressure gauge (30-0-600). | 752 |
| 4435-0023 | 4" NoShok master pressure gauges (30-0-600). | 230 |
| 4435-0024 | 6" Class 1 compound pressure gauge (30-0-600). | 740 |
| 4435-0025 | Flowminder Super System. Discharge: [#LOC]. | 3058 |
| 4435-0026 | Flowminder System. Discharge: [#LOC]. | 1977 |
| 4435-0027 | Flow Meter Value System. Discharge: [#LOC]. | 1815 |
| 4435-0030 | Transmission temperature gauge. | 280 |
| 4435-0031 | Pump hourmeter on pump operator's panel. | 174 |
| 4435-0033 | Ammeter gauge on pump operator's panel. | 318 |
| 4435-0034 | Fuel level gauge on pump operator's panel. | 384 |
| 4435-0035 | Enfo III System on Pump Operator's Panel | 1159 |
| 4435-0036 | Engine gauge package at the pump operator's panel. | 803 |
| 4435-0038 | Class 1 Engine Status Center on Pump Operator's Panel | 1903 |
| 4435-0040 | FRC Tachplus engine monitoring display. | 1560 |
| 4435-0047 | Class 1 Intelli-Tank water tank level gauge additional. Location: [#LOC]. | 626 |
| 4435-0049 | Class 1 tank level water LED graph gauge additional. Location: [#LOC]. | 856 |
| 4435-0050 | FRC Tank Level Water TankVision Gauge Additional. Location: [#LOC]. | 583 |
| 4435-0051 | Innovated Controls 5 Light Tank Level Water Gauge Additional Location: [#LOC] | 764 |
| 4435-0052 | Class 1 Tank Level Water Mini Gauge Additional. Location: [#LOC]. | 572 |
| 4435-0053 | FRC Tank Level Water TankVision model WLA205-A00 Mini Gauge. Location: [#LOC]. | 436 |
| 4435-0054 | Innovative Controls 5 Light Tank Level Water Mini Gauge. Location: [#LOC]. | 597 |
| 4435-0055 | Class 1 Tank Level Intelli Foam Gauge Additional. Location: [#LOC]. | 626 |
| 4435-0056 | Class 1 Tank Level Foam Mini Gauge Additional Location: [#LOC] | 572 |
| 4435-0057 | FRC Tank Level A Foam Tank Vision model WLA265-A00 Mini Gauge Additional. Location: [#LOC]. | 522 |
| 4435-0058 | FRC Tank Level B Foam Tank Vision model WLA205-A00 Mini Gauge Location: [#LOC] | 522 |
| 4435-0059 | Innovated Controls Tank Level Foam Mini Gauge Additional Location: [#LOC] | 597 |
| 4435-0063 | Duplex Master Gauge for CAFS or Industrial Foam Systems. | 579 |
| 4435-0064 | FRC Insight Ultimate model FPA400 combination pressure/flow gauge. Location: [#LOC]. | 2305 |
| 4435-0065 | 2.5" NoShok pressure gauge (30-0-600). For: [#LOC]. | 167 |
| 4435-0066 | IC5/Whelen 500 Water Tank Level Gauge Package Location of Whelen 500 Tank Level Lights: [#LOC] | 4372 |
| 4435-0067 | Class 1/Whelen PSTank Water Tank Level Gauge Package. Location of Whelen PSTank Strip-Lights: [#LOC]. | 2075 |
| 4435-0068 | IC5/Whelen PSTank Water Tank Level Gauge Package Location of Whelen PSTank Strip-Lights: [#LOC] | 2042 |
| 4435-0069 | Class 1 ENFO IV system on pump operator's panel. | 1038 |
| 4435-0070 | Fire Research TankVision model WL2600 Class A and WL2700 Class B foam tank level gauges. | 2098 |
| 4435-0071 | FRC Tank Vision model WLA205-A00 Tank Level A and B Foam Gauges Location: [#LOC] | 1038 |
| 4435-0072 | Fire Research Tank Vision Water Tank Level Gauge with Automatic Tank Filling System model ATA400 Location: [#LOC] | 3208 |
| 4435-0074 | FRC Water Tank Level Gauge with Driver for Spartan Chassis only. | 1219 |
| 4435-0075 | Ashcroft 6" dry master intake and discharge gauges. | 643 |
| 4435-0076 | Ashcroft 3.5" dry discharge gauges. Provide for each discharge. | 1622 |

| Item No. | Description | |
|---|---|---|
| 4435-0081 | Audible and visual indicators on driver side pump panel. (1) audible/visual indicator for high engine temp and low oil pressure and (1) audible/visual for high trans temp. | 319 |
| 4435-0083 | Innovative Controls 10 LED SL series water tank level gauge. On pump panel. | 558 |
| 4435-0084 | Innovative Controls 10 LED series foam tank level gauge. On pump panel. | 799 |
| 4435-0085 | Innovative Controls 10 LED SL series tank level water gauge additional. Location: [#LOC]. | 764 |
| 4435-0086 | Innovative Controls 10 LED series Tank Level Water Mini Gauge. Location: [#LOC]. | 597 |
| 4435-0087 | Innovative Controls IC 10 LED SL series Tank Level Foam Mini Gauge Additional. Location: [#LOC]. | 597 |
| 4435-0088 | IC 10 LED SL series/Whelen 500 water tank level gauge package. Location of Whelen 500 tank level lights: [#LOC]. | 4372 |
| 4435-0089 | IC 10 LED SL series/Whelen PSTank water tank level gauge package. Location of Whelen PSTank Strip Lights: [#LOC]. | 2042 |
| 4435-0090 | Additional PSTank Level Strip-Light. Located: [#LOC]. | 498 |
| 4435-0092 | 2.5" Class 1 compound pressure gauge (30-0-400). Discharge: [#LOC]. | 155 |
| 4435-0093 | 3.5" Class 1 pressure gauge (30-0-400). Discharge: [#LOC]. | 186 |
| 4435-0094 | Class 1 4-1/2" compound pressure gauge (30-0-400 PSI). | 215 |
| 4435-0099 | Flow Meter Value System. Discharge: right side discharge 4 | 1815 |
| 4435-0100 | Flow Meter Value System. Discharge: left side discharge 4 | 1815 |
| 4435-0101 | 2.5" Span Pressure Gauge (30-0-600). Discharge: [#LOC]. | 148 |
| 4435-0102 | 3.5" Span Pressure Gauge (30-0-600). Discharge: [#LOC]. | 180 |
| 4435-0103 | 4.5" Span Pressure Gauge (30-0-600 PSI). | 209 |
| 4435-0104 | MC Series 2000 4 Light Water Tank Level Gauge | 720 |
| 4435-0105 | MC Series 2000 4 Light Series Foam Tank Level Gauge | 906 |
| 4435-0106 | Dual Scale 3.5" Pressure Gauge 0-400 PSI / 100-2800 KPA. Replaces Standard | 358 |
| 4435-0107 | Primer motor master disconnect cut-off switch. Locate on pump panel. | 239 |
| 4435-0108 | Digital Pressure Gauge IPO Duplex Gauge | 921 |
| 4435-0109 | 2.5" Class 1 Pressure Gauge (30-0-600). IPO Duplex | 155 |
| 4435-0110 | Pump Overheat Gauge Indicator with Audible Alarm | 518 |
| 4435-0111 | MC Series 500 4 LED Series Water Tank Level Gauge | 855 |
| 4435-0112 | Class 1 Pressure 4.5" Gauge (30-0-300 PSI) | 215 |
| 4435-0113 | FRC TankVision/Whelen PSTank water tank level gauge package. Location of Whelen PSTank Strip-Lights: [#LOC]. | 2753 |
| 4435-0114 | Digital CAFS CFM Flow Meter | 2337 |
| 4435-0115 | 2.5" NoShok Pressure Gauge (-30-0-600 PSI/100-0-4000KPA). For: [#LOC]. | 187 |
| 4435-0116 | 4" NoShock Dual Read Pressure Gauge 30-0-600PSI/100-0-4000KPA | 243 |
| 4435-0117 | FRC Tank Level Foam Tank Vision Gauge Additional Location: [#LOC] | 662 |
| 4435-0118 | 4" NoShock Dual Read Pressure Gauge 30-0-400PSI/100-0-2800KPA | 243 |
| 4435-0119 | 2.5" NoShok Pressure Gauge (0-400 PSI/-0-2800KPA) For: [#LOC] | 187 |
| 4435-0120 | Duplex Master Gauge (0-400 PSI) for CAFS or Industrial Foam Systems. | 579 |
| 4435-0122 | Fire Research Tank Vision model WL2000 Water Tank Level Gauge w/an audible alarm low level buzzer shall be installed. The buzzer shall sound when the tank volume indicator drops to 1/4 tank. | 1093 |
| 4435-0123 | FRC Insight model FPA410 Ultimate Pressure Gauge LPM/KPA Location: [#LOC] | 2305 |
| 4435-0124 | 6" Class 1 Compound Pressure Gauge (30-0-400 PSI). | 726 |
| 4435-0125 | Class Digital Pressure Gauge Discharge: [#LOC] | 921 |
| 4435-0126 | Digital Master Pressure Gauge | 879 |
| 4435-0127 | 3.5" Span Pressure Gauge (0-400). Discharge: [#LOC] | 189 |
| 4435-0128 | Dual Read 2.5" Span Pressure Gauge (0-300 psi/0-2050KPA). Discharge: [#LOC] | 207 |
| 4435-0129 | Dual Read 6.0" Span Pressure Gauge (30-0-400 psi/100-0-2800KPA) | 422 |
| 4435-0130 | FRC Insight model FPA400 Ultimate Master Flow Gauge | 1779 |
| 4435-0131 | 2.5" Class 1 Pressure Gauge (0-300). Discharge: [#LOC] | 164 |
| 4435-0133 | FRC/Whelen 500 Water Tank Level Gauge Package Location of Whelen 500 Tank Level Lights: [#LOC] | 4331 |
| 4435-0134 | FRC Foam Tank Level Gauge "Class B Foam" with Driver for Spartan Chassis only. | 1374 |
| 4435-0135 | Class 1 Intelli/Whelen PSTank Water Tank Level Gauge Package Location of Whelen PSTank Strip-Lights: [#LOC] | 2609 |
| 4435-0139 | Span Pressure 4" Gauge (0-400 PSI) | 215 |
| 4435-0140 | Span Master Intake/Pressure 4" 50/50 Gauge (30-0-300) | 360 |
| 4435-0147 | Innovative Controls 14 LED SL series Water Tank Level Gauge | 565 |
| 4435-0151 | 4.5" Class 1 Pressure Gauge (30-0-600) Black Face w/White letters. | 230 |
| 4435-0152 | 2.5" Class 1 Pressure Gauge (30-0-600). Discharge with Black Face and White Letters: [#LOC] | 164 |
| 4435-0155 | Dual Read 4.5" Span Pressure Gauge (30-0-600 psi/100-0-4000 KPA) | 322 |
| 4435-0156 | Class 1 Intelli-40 Tank Water Tank Level Gauge with Blue LED's. | 814 |
| 4435-0157 | Class 1 Intelli-40 Tank Foam Tank Level Gauge with Red LED's. | 778 |
| 4435-0158 | 6" Span Pressure Gauge (30-0-600) | 746 |
| 4435-0159 | Dual Read 2.5" Pressure Gauge (30-0-400 psi/100-0-2800KPA). Discharge: [#LOC] | 218 |
| 4435-0160 | Transmission Temperature Gauge with light and a buzzer alarm for audible warning. | 401 |

| Item No. | Description | |
|---|---|---|
| 4435-0161 | Dual Read 4.5" Pressure Gauge (30-0-400 psi/100-0-2800 KPA) | 322 |
| 4435-0162 | IC10/Whelen M6 LED Water Tank Level Gauge Package Location of Whelen M6 LED Tank Level Lights: [#LOC] | 4527 |
| 4435-0174 | Sight Tube Water Tank Level Gauge. Located on driver's pump panel. | 561 |
| 4435-0175 | Duplex Master Gauge (0-600 PSI) for CAFS or Industrial Foam Systems. | 663 |
| 4435-0177 | Innovated Controls 14 LED SL series Tank Level Water Gauge Additional Location: [#LOC] | 792 |
| 4435-0178 | Engine gauge package at the pump operator's panel. | 924 |
| 4435-0179 | Deluxe engine gauge package with fuel and transmission temp built into the tach gauge display at the pump operator's panel. | 1056 |
| 4435-0180 | 2.5" Pressure Gauge Dual Read (0-400 PSI/-0-2700KPA) . Discharge: [#LOC]. Color: [#COL]. | 273 |
| 4435-0181 | 4.5" Pressure Gauge (30-0-400 psi/100-0-2758 KPA). Color: [#COL]. | 345 |
| 4435-0182 | FRC Insight model FPA412 Ultimate Pressure Gauge LPM/KPA with back lighting Location: [#LOC] | 2485 |
| 4435-0183 | Sight Tube Water Tank Level Gauge with Indicator. Located inside pump compartment on driver's side as high/low as possible. | 561 |
| 4435-0184 | 2.5" NoShok pressure gauge (0-400). For: [#LOC]. | 167 |
| 4435-0185 | 4" NoShok master pressure gauges 30-0-400PSI. | 281 |
| 4435-0186 | Class 1 Tank Level Intelli 40 Water Gauge Additional Location: [#LOC] | 897 |
| 4435-0190 | IC10 Water with (1) Whelen PSTank Water Tank Level Gauge. Location of Whelen PSTank Strip-Lights: Officer side rear of front cab door. | 1547 |
| 4435-0191 | Dual Scale 3.5" Pressure Gauge 0-400 PSI / 100-2800KPA.. Discharge: [#LOC]. | 301 |
| 4435-0193 | 2.5" Class 1 compound pressure gauge (0-400). Discharge: [#LOC]. | 155 |
| 4435-0196 | 2.5" Waterway Pressure Gauge Dual Read (30-0-600 psi/100-0-4140 KPA). Discharge: [#LOC]. Color: [#COL]. | 219 |
| 4435-0198 | 3.5" Class 1 pressure gauge (0-400). Discharge: [#LOC]. | 189 |
| 4435-0199 | Class 1 Intelli-40M Tank Water Tank Level Gauge. | 835 |
| 4435-0200 | 2.5" Class 1 pressure gauge (0-600). Discharge: [#LOC]. | 151 |
| 4435-0202 | 4.5" Class 1 Discharge pressure gauge (0-600 PSI). | 155 |
| 4435-0203 | Additional Whelen 500 Tank Level Lights. Located: officer rear. | 993 |
| 4435-0205 | 3.5" LED Class 1 compound pressure gauge (30-0-400). Discharge: [#LOC]. Color: [#COL]. | 275 |
| 4435-0206 | 4.5" LED Class 1 compound pressure gauge (30-0-400). Color: [#COL]. | 276 |
| 4435-0209 | 2.5" LED Class 1 compound pressure gauge (30-0-400). Discharge: [#LOC]. Color: [#COL]. | 271 |
| 4435-0210 | PSTank Level Strip-Light Pair Located: [#LOC] (Chassis only option require sale codes for gauge and driver) | 995 |
| 4435-0212 | Generator hourmeter on officer side rear compartment. | 174 |
| 4435-0213 | Class 1 3-1/2" compound pressure gauge (30-0-400 PSI). Master intake and discharge gauges. | 376 |
| 4435-0214 | IC10 Water with (1) Whelen PSTank Water Tank Level Gauge. Location of IC10 LED tank level gauge on operator panel. Location of Whelen PSTank Strip-Lights: Officer side rear of body facing rearward. | 1547 |
| 4435-0215 | Class 1 4-1/2" compound pressure gauge (30-0-400 PSI). Locate Auto Fill Inlet. | 215 |
| 4435-0216 | Class 1 Intelli-Tank water tank level gauge mounted on the rear of the body. Optimize mounting position on rear body using space not allocated by other equipment unless otherwise specified. | 545 |
| 4435-0217 | Duplex 4.5" Dual Read Master Gauge (0-600 psi/0-4000KPA) for CAFS or Industrial Foam Systems. | 579 |
| 4435-0218 | 6" LED Backlit compound pressure gauge (30-0-400). Color: [#COL]. | 607 |
| 4435-0219 | Water pump digital water temperature gauge. | 396 |
| 4435-0221 | Class 1 Intelli-40M Tank Foam Tank Level Gauge with red back ground. | 835 |
| 4435-0222 | Class 1 Intelli-40M Tank Foam Tank Level Gauge with green back ground. | 835 |
| 4435-0223 | Class 1 2.5" LED Backlit compound pressure gauge (30-0-400) package. Provide for each discharge. (SPECIAL COLOR INFO IN FILE) | 2970 |
| 4435-0224 | 3.5" Class 1 pressure gauge (0-400). w/Class 1 Logo. Discharge: [#LOC]. | 185 |
| 4435-0225 | Gauge heater strips shall extend the full length of the gauge line. (Officer side discharge gauge lines will require 2 per line) | 135 |
| 4435-0226 | DEF level gauge on pump operator's panel. | 384 |
| 4435-0228 | Innovative Controls 10 LED SL series water tank level gauge. In R2 Compartment. | 558 |
| 4435-0229 | 2.5" LED Class 1pressure gauge (0-300). Discharge: [#LOC]. Color: [#COL]. | 219 |
| 4435-0231 | Class 1 Tank Level Intelli 40M Water Gauge Additional Location: [#LOC] | 833 |
| 4435-0232 | 4.5" LED Class 1 compound pressure gauge (30-0-300). Color: [#COL]. | 355 |
| 4435-0233 | Single Read 2.5" Thuemling Pressure Gauge (0-2800KPA. Location: One (1) for each discharge outlet. | 1521 |
| 4435-0234 | Single Read 4.5" Thuemling Pressure Gauge (100-0-4000 KPA) (1) master intake and (1) master discharge gauges. | 627 |
| 4435-0236 | Ashcroft 6" dry master intake and discharge gauges. (30-0-300) | 802 |
| 4435-0237 | Ashcroft 3.5" dry discharge gauges. Provide for each discharge. (0-300) | 1622 |
| 4435-0240 | Innovative Controls 10 LED SL series tank level foam gauge additional. Location: [#LOC]. | 799 |
| 4435-0241 | Innovative Controls 10 LED series foam tank level gauge with a bright yellow easy to read graphics overlay. On pump panel. | 798 |
| 4435-0242 | Sight Tube Water Tank Level Gauge. Located on driver's side adjacent to pump operator panel. | 560 |

| Item No. | Description | |
|---|---|---|
| 4435-0243 | 4" Innovative Controls Brass Case Nite-Glo Master Pressure Gauges with Bezel. Intake 30-0-400 and Discharge 0-400. | 982 |
| 4435-0244 | 2.5" Innovative Controls brass case pressure gauge (0-400) with color code bezel. | 179 |
| 4435-0246 | 2.5" Innovative Controls stainless steel case pressure gauge (0-400) with color code bezel. | 156 |
| 4435-0247 | 4" Innovative Controls stainless steel case master pressure gauges with bezel. Intake 30-0-400 and discharge 0-400. | 444 |
| 4435-0248 | 2.5" Innovative Controls stainless steel case dual read pressure gauge (0-2750KPA/0-400PSI) with color code bezel. | 156 |
| 4435-0249 | 4" Innovative Controls stainless steel case master pressure gauges with bezel. Intake 30-0-400 and discharge 0-400 dual read KPA/PSI. | 444 |
| 4435-0250 | 2.5" Innovative Controls brass case pressure gauge (0-400) with color code bezel. | 179 |
| 4435-0251 | Innovative Controls SL Plus series water tank level gauge with E-One logo at the bottom. | 658 |
| 4435-0252 | Innovative Controls SL Plus series foam tank level gauge (foam tank A). | 658 |
| 4435-0253 | Innovative Controls SL Plus series foam tank level gauge (foam tank B). | 658 |
| 4435-0254 | 4" Innovative Controls brass case master pressure gauges with bezel. Intake 30-0-400 and discharge 0-400. | 662 |
| 4435-0255 | 4" Innovative Controls brass case master pressure gauges with bezel. Intake 30-0-400 and discharge 0-400 dual read KPA/PSI. | 652 |
| 4435-0257 | Additional Innovative Controls SL Plus series tank level water gauge. Location: [#LOC]. | 675 |
| 4435-0258 | Addition 4" Innovative Controls stainless steel case master pressure gauges 0-400. Locate driver side pump panel. | 257 |
| 4435-0261 | 4" Innovative Controls stainless steel case master pressure gauges with bezel. Intake 30-0-400 and duplex discharge 0-400 for CAFS and Industrial applications. | 1502 |
| 4435-0262 | 2.5" Innovative Controls Nite-Glo brass case pressure gauge (0-400) and color code bezel with blue light gauge illumination. | 355 |
| 4435-0263 | 2.5" Innovative Controls Nite-Glo brass case pressure gauge (0-400) and color code bezel with red light gauge illumination. | 355 |
| 4435-0264 | FRC TankVision/FRC Maxvision water tank level gauge package. Location of FRC Maxvision Strip-Lights: each side of cab towards rear | 2865 |
| 4435-0266 | 2.5" Innovative Controls Nite-Glo brass case pressure gauge (0-400) and color code bezel with white light gauge illumination. | 355 |
| 4435-0269 | 4" Innovative Controls stainless steel case pressure gauge (0-400). Location: Master discharge pressure gauge. | 244 |
| 4435-0270 | IC SL PLUS series/Whelen PSTank water tank level gauge package. Location of Whelen PSTank Strip Lights: [#LOC]. | 2648 |
| 4435-0271 | 2.5" LED Class 1pressure gauge (0-400). Discharge gauge. Color: [#COL]. | 271 |
| 4435-0272 | 4" Innovative Controls stainless steel case master pressure gauges with bezel. Intake 30-0-400 and duplex discharge 0-400 dual read KPA/PSI. for CAFS and Industrial applications. | 1502 |
| 4435-0274 | 2.5" Innovative Controls stainless steel case pressure gauge (0-300) with color code bezel. | 156 |
| 4435-0275 | 4" Innovative Controls stainless steel case duplex pressure gauge (0-400) with color code bezel. | 1180 |
| 4435-0277 | Class 1 ENFO IV system on pump operator's panel. (METRIC UNITS) | 1038 |
| 4435-0278 | FRC Insight Ultimate model FPA-402 combination pressure/flow gauge w/ back light. Include color code bezel. | 2384 |
| 4435-0279 | Class 1 3.5" discharge gauges. Provide for each discharge. (0-600) | 1859 |
| 4435-0280 | 6" Class 1 master pressure gauges. Intake 30-0-600 and discharge 0-600. | 1481 |
| 4435-0281 | Class 1 Intelli w/driver and (1) Whelen PSTank Water Tank Level Gauge. Location of Whelen PSTank Strip-Lights: Driver side upper body forward of scene light. | 1337 |
| 4435-0282 | IC 10 LED SL series/Whelen 400 water tank level gauge package. Location of Whelen 400 tank level lights: Each side of upper pump panel. | 4026 |
| 4435-0283 | 2.5" LED Class 1 compound pressure gauge (30-0-400). Color Red | 271 |
| 4435-0285 | Fire Research TankVision Pro model WL300-A00 water tank level gauge. | 791 |
| 4435-0286 | Fire Research TankVision Pro model WL360-A00 Class A foam tank level gauge. | 896 |
| 4435-0287 | Fire Research TankVision Pro model WLA300-B00 water level gauge Additional. Location: [#LOC]. | 698 |
| 4435-0288 | Fire Research TankVision Pro model WLA360-A00 Class A and WLA370-B00 Class B foam tank level gauges. | 1789 |
| 4435-0289 | Fire Research TankVision Pro model WLA 370-A00 Class B foam tank level gauge. | 896 |
| 4435-0290 | Additional Monster Water Level Light. Located: [#LOC]. | 498 |
| 4435-0291 | 4" Innovative Controls stainless steel case master pressure gauges with bezel. Intake 30-0-400 and duplex discharge 0-400 for CAFS and Industrial applications. IPOS HALE | 444 |
| 4435-0292 | FRC TankVisionWLA300-B00/Whelen PSTank water tank level gauge package. Location of Whelen PSTank Strip-Lights: [#LOC]. | 2753 |
| 4435-0293 | Class 1 3.5" discharge gauges. Provide for each discharge. (0-300) [#LOC] | 185 |
| 4435-0294 | 6" Class 1 Compound Pressure Gauge (30-0-400 PSI). | 726 |
| 4440-0004 | 2.5" side suction top mount control handle Akron manual valve. Location: [#LOC]. | 1637 |
| 4440-0005 | 2.5" Left Intake Akron Manual Valve. | 1234 |
| 4440-0006 | 2.5" Right intake Akron manual valve. | 1234 |

| Item No. | Description | |
|---|---|---|
| 4440-0007 | 2.5" Left Rear Intake Akron Manual Valve. (With rear discharge location to be outside or below). | 1990 |
| 4440-0008 | 2.5" Right Rear Intake Akron Manual Valve.(With rear discharge location to be outside or below). | 1446 |
| 4440-0010 | 3" Left Intake Akron Manual Valve. | 2023 |
| 4440-0011 | 3" Right Intake Akron Manual Valve. | 2070 |
| 4440-0012 | 3" right rear intake Akron manual valve. (With rear discharge location to be outside or below.) | 2374 |
| 4440-0014 | 5" front intake without valve. | 3923 |
| 4440-0015 | 5" Front Intake w/5" Air Actuated Valve and Relief. | 6187 |
| 4440-0016 | 5" right rear intake no valve. | 2995 |
| 4440-0017 | 5" Right Rear Intake w/5" Air Actuated Valve and Relief. | 4982 |
| 4440-0018 | 2.5" Intake Akron Manual Valve Rear Mount | 1051 |
| 4440-0019 | 4" Rear Intake Akron Electric Valve for Rear Mount | 4102 |
| 4440-0025 | 5" front intake with no valve plumbed through front bumper. | 4385 |
| 4440-0026 | 5" Front Intake w/5" Air Actuated Valve and Relief Plumbed Through Front Bumper. | 6651 |
| 4440-0027 | 2.5" Left Intake Hale Manual Valve | 1257 |
| 4440-0028 | 2.5" Right Intake Hale Manual Valve | 1477 |
| 4440-0029 | 3" Right Intake Hale Manual Valve | 2618 |
| 4440-0030 | 2.5" Side Suction Top Mount Control Handle Hale Manual Valve Location: [#LOC] | 1874 |
| 4440-0031 | 3" Left Intake Hale Manual Valve | 2053 |
| 4440-0033 | 2.5" Left Rear Intake Hale Manual Valve. (With rear discahrge location to be outside or below). | 2160 |
| 4440-0034 | 2.5" Right Rear Intake Hale Manual Valve | 1615 |
| 4440-0035 | 3" Right Rear Intake Hale Manual Valve | 2602 |
| 4440-0036 | 2.5" left intake Elkhart manual valve. | 1402 |
| 4440-0037 | 3" Left Intake Elkhart Manual Valve | 2268 |
| 4440-0038 | 2.5" Left Rear Intake Elkhart Manual Valve. (With rear discahrge location to be outside or below). | 2156 |
| 4440-0039 | 2.5" Side Suction Top Mount Control Handle Elkhart Manual Valve. Location: [#LOC]. | 1800 |
| 4440-0040 | 2.5" Right Intake Elkhart Manual Valve | 1402 |
| 4440-0041 | 3" Right Intake Elkhart Manual Valve | 2316 |
| 4440-0042 | 2.5" Right Rear Intake Elkhart Manual Valve | 1609 |
| 4440-0043 | 3" Right Rear Intake Elkhart Manual Valve. (With rear discahrge location to be outside or below). | 2619 |
| 4440-0044 | 5" Left Rear Intake w/5" Air Actuated Valve and Relief. Requires air actuated tank to pump with side mount pump module configuration. | 5414 |
| 4440-0045 | 4" Left Rear Intake Akron Electric Valve w/Intake Relief Valve. | 5802 |
| 4440-0046 | 4" Right Rear Intake Akron Electric Valve w/Intake Relief Valve. | 5802 |
| 4440-0047 | 4" Left Rear Intake Elkhart Electric Valve w/Intake Relief Valve | 6245 |
| 4440-0048 | 5" Right Rear Intake Elkhart Electric Valve w/Intake Relief Valve | 6951 |
| 4440-0049 | 3" Left Rear Intake Akron Manual Valve. (With rear discahrge location to be outside or below). | 2769 |
| 4440-0050 | 3" Left Rear Intake Hale Manual Valve. (With rear discahrge location to be outside or below). | 2988 |
| 4440-0051 | 3" Left Rear Intake Elkhart Manual Valve. (With rear discahrge location to be outside or below). | 3007 |
| 4440-0053 | 4" Left Rear Intake Hale Electric Valve w/Intake Relief Valve | 6939 |
| 4440-0054 | 4" Right Rear Intake Hale Electric Valve w/Intake Relief Valve | 6939 |
| 4440-0055 | 3" Side Suction Top Mount Control Handle Akron Manual Valve. Location: [#LOC]. | 2353 |
| 4440-0056 | 3" Side Suction Top Mount Control Handle Hale Manual Valve Location: [#LOC] | 2575 |
| 4440-0057 | 3" Side Suction Top Mount Control Handle Elkhart Manual Valve Location: [#LOC] | 2591 |
| 4440-0058 | 5" Right Rear Intake w/5" Electric Actuated Valve and Relief. | 6951 |
| 4440-0061 | 5" front intake w/5" Akron electric actuated valve and relief. | 7746 |
| 4440-0062 | 5" Front Intake w/5" Elkhart Electric Actuated Valve and Relief. | 7749 |
| 4440-0063 | Intake 6" Elkhart Elk-O-Lite 9786 Piston Valve. Ship Loose. | 2322 |
| 4440-0064 | 2.5" Left Intake w/3" Akron Manual Valve | 1885 |
| 4440-0065 | 2.5" Left Intake w/3" Hale Manual Valve | 2105 |
| 4440-0066 | 2.5" Left Intake w/3" Elkhart Manual Valve | 2123 |
| 4440-0067 | 2.5" Right Intake w/3" Akron Manual Valve | 1885 |
| 4440-0068 | 2.5" Right Intake w/3" Hale Manual Valve | 2105 |
| 4440-0069 | 2.5" Right Intake w/3" Elkhart Manual Valve | 2123 |
| 4440-0070 | 2.5" Side Suction Top Mount Control Handle w/3" Akron Manual Valve Location: [#LOC] | 2287 |
| 4440-0071 | 2.5" Side Suction Top Mount Control Handle w/3" Hale Manual Valve Location: [#LOC] | 2508 |
| 4440-0072 | 2.5" Side Suction Top Mount Control Handle w/3" Elkhart Manual Valve Location: [#LOC] | 2523 |
| 4440-0073 | The driver and officer side aux. intakes. Includes 3" valve and 2.5" connection on panel. | 2832 |
| 4440-0074 | 5" Front Intake without Valve Low "S" in Tray | 3821 |
| 4440-0075 | 5" Front Intake w/5" Air Actuated Valve and Relief Low "S" in Bumper Tray. | 6085 |
| 4440-0076 | 4" Front intake w/4" Akron electric valve and relief. | 6907 |
| 4440-0077 | 2.5" Side Intake Operator Control Akron Elec Valve Drivers side. | 3277 |
| 4440-0078 | 2.5" Left Intake Elkhart Unibody TM Control Manual Valve | 1528 |
| 4440-0079 | 3" Side Suction Top Mount Control Handle Elkhart Manual Unibody Valve Location: [#LOC] | 2359 |
| 4440-0080 | Front Intake Left and Right Pump 6" Inlet and 2.5 Left Direct Tank Fill Shall be "T" together with spring check valves and plumb into the FRC auto tank fill. | 3782 |
| 4440-0081 | 2.5" side suction air control Akron valve Drivers side. | 1263 |

| Item No. | Description | |
|---|---|---|
| 4440-0082 | 2.5" Left Intake Akron Manual Valve With Integral 30 Degree Droop | 1314 |
| 4440-0083 | 2.5" Right Intake Akron Manual Valve With Integral 30 Degree Droop | 1314 |
| 4440-0084 | 5" Front Intake w/5" Manual Gear Actuated Valve and Relief | 7258 |
| 4440-0086 | 2.5" Side Intake Operator Control Akron Elec Valve Officer side. | 3277 |
| 4440-0087 | 2.5" Intake with Akron electric valve. Controller to be located at pump operator panel. Locate intake [#LOC]. | 3293 |
| 4440-0088 | 2.5" Intake with Hale electric valve. Controller to be located at pump operator panel. Locate intake [#LOC]. | 3293 |
| 4440-0089 | 5" Front Intake w/5" Electric Actuated Valve and Relief Low "S" in Bumper Tray | 7645 |
| 4440-0090 | 2.5" Side Suction Air Act Akron Valve Locate Rear of Steamer. | 1805 |
| 4440-0091 | 2.5" Side Suction Top Mount Control Handle w/3" Elkhart Unibody Manual Valve Location: [#LOC] | 2395 |
| 4440-0092 | 3" Left Intake Elkhart Unibody Manual Valve | 2023 |
| 4440-0093 | 3" Right Intake Elkhart Unibody Manual Valve | 2070 |
| 4440-0094 | 2.5" Left Intake Elkhart Unibody Manual Valve w/chrom valve face. | 1234 |
| 4440-0095 | 2.5" Right Intake Elkhart Unibody Manual Valve w/chrome valve face. | 1234 |
| 4440-0096 | 5" Front Intake w/4" Hale Electric Actuated Valve and Relief Low "S" in Bumper Tray | 7619 |
| 4440-0097 | 2.5" Right Intake Elkhart Unibody Manual Valve | 1234 |
| 4440-0098 | 5" Front Intake w/5" Akron Electric Actuated Valve and Relief | 7746 |
| 4440-0099 | 2.5" Intake with Akron electric valve. Controller to be located at pump operator panel. Locate intake [#LOC]. | 3293 |
| 4440-0101 | 3.0" Side Intake Operator Control Akron Elec Valve Officer side. | 3778 |
| 4440-0102 | 3" Left Rear Intake Akron Electric Valve w/Intake Relief Valve | 3900 |
| 4440-0103 | 5" Front Intake w/5" Elect. Actuated Valve and Relief Plumbed Through Front Bumper. | 7746 |
| 4440-0104 | 3.0" Side Intake Operator Control Akron Electric Valve Driver side. | 3778 |
| 4440-0105 | 2.5" Intake Akron Manual Valve for Rear Mount Location: [#LOC] | 1456 |
| 4440-0106 | 2.5" Intake Akron Electric Valve for Rear Mount Location: [#LOC] | 3521 |
| 4440-0107 | 2.5" Side Suction Top Mount Control Handle Elkhart Manual Unibody Valve Location: [#LOC] | 1619 |
| 4440-0111 | Officer side 5" rear intake (No Valve). Intake to run under officer side of tank and then angle into B1. In B1 the intake needs to angle downward to above floor mounted reel. Support brackets will be provided as required and to engineering requirements. To include any additional primer valves as required. | 4805 |
| 4440-0112 | 2.5" Intake with Elkhart Unibody electric valve. Controller to be located at pump operator panel. Locate intake [#LOC]. | 3293 |
| 4440-0113 | 2.5" Intake Elkhart Unibody Manual Valve for Rear Mount Location: [#LOC] | 1456 |
| 4440-0126 | Akron 2.5" foam system intake with swing handle. For use with Williams Advent or Hot Shot 150 foam system. Locate to [#LOC]. | 1234 |
| 4440-0129 | Elkhart 3" foam system intake with swing handle. For use with Hot Shot 300 foam system. Locate to [#LOC]. | 2093 |
| 4440-0130 | 2.5" Right Intake w/3" Akron Manual Valve. Location: (REAR OF STREAM) | 1885 |
| 4440-0131 | 2.5" Right Side intake Akron manual valve. Locate valve down low and the handle to be horizontally. | 1421 |
| 4440-0133 | 3" Intake with Akron electric valve. Controller to be located at pump operator panel. Locate intake [#LOC]. | 3778 |
| 4440-0134 | 3" Intake with Elkhart Unibody electric valve. Controller to be located at pump operator panel. Locate intake [#LOC]. | 3778 |
| 4440-0137 | 2.5" side suction top mount control handle Akron manual valve with chrome plated end. Location: [#LOC]. | 1691 |
| 4440-0138 | 2.5" right intake Akron manual valve with chrome plated end. | 1287 |
| 4440-0139 | 2.5" Intake Akron Manual Valve for Rear Mount Location: officer side rear intake with Integral 30 Degree Droop | 1521 |
| 4440-0140 | 2.5" right intake Akron manual valve located rear of steamer IPO standard location. | 1234 |
| 4440-0141 | 5" Front Intake w/5" Air Actuated Valve and Relief. A three position air control switch will be located adjacent to the front suction on top of gravel shield inboard of front suction swivel. | 6187 |
| 4440-0142 | 5" Left Rear Intake w/5" Air Actuated Valve and Relief. Does not include cap. | 5249 |
| 4440-0143 | 2.5" Intake with Akron Electric Valve & Navigator Pro 9323 Controller with 30degree droop. Controller locates on pump operator panel. Locate intake [#LOC]. | 3210 |
| 4440-0144 | 5" Right Rear Intake w/5" Manual Hand Wheel Actuated Valve and Relief. | 6845 |
| 4440-0146 | Aux 2.5" foam system intake with swing handle. Locate to be [#LOC]. | 1234 |
| 4440-0147 | 2.5" Left Intake Akron Manual Valve With Integral 30 Degree Chrome Droop. | 1525 |
| 4440-0148 | 2.5" Right Intake Akron Manual Valve With Integral 30 Degree Chrome Droop. | 1525 |
| 4440-0149 | 2.5" Side Intake Top Mount Control Handle Akron manual valve. With Integral 30 Degree Chrome Droop. Location: [#LOC]. | 1927 |
| 4440-0150 | 2.5" Side Intake Top Mount Contro Handlel Akron manual valve. With Integral 30 Degree Droop.. Location: [#LOC]. | 1716 |
| 4440-0151 | 2.5" Side Suction Top Mount Control Handle Elkhart Manual Unibody Valve W/30 degree Chrome Droop. Location: [#LOC] | 1910 |

| Item No. | Description | |
|---|---|---|
| 4440-0152 | 2.5" Left Intake Elkhart Unibody Manual Valve w/30 degree Chrome Droop. | 1525 |
| 4440-0153 | 2.5" Right Intake Elkhart Unibody Manual Valve w/30 degree Chrome Droop. | 1525 |
| 4440-0155 | 2.5" Left Rear Intake Akron Manual Valve. Top Mount control. | 2234 |
| 4440-0158 | 4" Right Rear Intake Akron Electric Valve include 9323 controller w/Intake Relief Valve. | 5801 |
| 4440-0159 | 5" front intake w/5" Akron electric actuated valve and relief with 9323 valve controller. | 7746 |
| 4440-0160 | 5" Front Intake w/5" Electric Akron Valve with 9323 controller and Relief Low "S" in Bumper Tray | 7645 |
| 4440-0163 | 5" Front Intake w/5" Elect. Actuated Valve and Relief Plumbed Under Front Bumper. With 6" adapter. | 7858 |
| 4440-0164 | 5" Front Intake w/5" Elect. Akron Valve 9323 controller and Relief Plumbed Through Front Bumper. | 7858 |
| 4440-0165 | 4" Right Rear Intake w/4" Air Actuated Valve and Relief. | 4760 |
| 4440-0166 | 4" Right Rear Intake w/4" Air Actuated Valve and Relief. | 4982 |
| 4440-0167 | 5" Front intake w/5" hand wheel actuated valve and relief. | 7097 |
| 4440-0168 | 6" Right Rear Intake w/6" Air Actuated Valve and Relief. | 5964 |
| 4440-0169 | 2.5" Intake with 3" Akron electric valve WITH 9323 controller. Controller to be located at pump operator panel. Locate intake valve: Locate intake [#LOC]. | 3778 |
| 4440-0170 | 4" Right rear intake no valve. | 2995 |
| 4440-0171 | 5" Left Rear Intake w/5" Electric Valve with 9323 controller and Relief. | 6795 |
| 4440-0172 | 5" Front Intake w/5" Jamesbury Valve Hand Wheel Actuated and Relief. "Low S" | 7400 |
| 4445-0004 | Front intake swivel 5" polished chrome. | 2331 |
| 4445-0005 | Front intake swivel 6" polished chrome. | 2424 |
| 4445-0006 | Intake Adapter 5" FNPT x 4.5" MNST for Front Intake | 475 |
| 4445-0007 | Intake adapter 5" FNPT x 6" MNST for front intake. | 585 |
| 4445-0008 | Intake Relief Valve - Elkhart. | 699 |
| 4445-0009 | Intake relief valve Akron. | 513 |
| 4445-0011 | Valve Relief Intake - Ross 2.5" | 2114 |
| 4445-0013 | 2.5" Check Valve for [#LOC] intake. | 442 |
| 4445-0014 | 3" Check Valve for [#LOC] Intake | 755 |
| 4445-0015 | 6" Check Valve for [#LOC] Steamer | 736 |
| 4445-0016 | Intake relief valve Hale 2.5". | 706 |
| 4445-0018 | Intake relief valve outlet to be extended to the side of the truck under the running board. Includes tag that reads "Intake Pressure Relief Outlet - Do Not Cap". | 318 |
| 4445-0019 | Intake Adapter 5" FNST x 4.5" MNST for Front Intake | 475 |
| 4445-0020 | Intake Adapter 5" FNST x 6" MNST for Front Intake | 585 |
| 4445-0021 | Intake Adapter 5" FNPT x 4.5" MNST for Rear Intake | 475 |
| 4445-0022 | Intake adapter 5" FNPT x 6" MNST for rear intake. | 585 |
| 4445-0023 | Recessed front suction intake swivel in bumper 3" in tray. | 1074 |
| 4445-0024 | Intake adapter 5" FNPT x 5" MNST for front intake. | 436 |
| 4445-0025 | Intake Adapter 5" FNPT x 5" MNST for Rear Intake. | 436 |
| 4445-0026 | Front Intake Swivel 4" Polished Chrome | 1399 |
| 4445-0027 | Intake Adapter 4" FNPT x 4" MNST for Rear Intake. | 419 |
| 4445-0028 | Intake bleeder/drain valve to be extended to the side of the truck. | 65 |
| 4445-0030 | Intake Adapter 5" FNST x 4" MNST with LH 4" cap for Front Rear or Side Intake. | 475 |
| 4445-0032 | Front Intake Swivel 5" Painted Job Color | 131 |
| 4445-0035 | Front Intake Swivel 6" Painted Job Color | 2424 |
| 4445-0037 | Auto Tank Fill Valve Plumbing "T" into Right MIV'S/Rear Intake with check valves. | 731 |
| 4445-0038 | Waterous Intake Pressure Relief Valve. | 1614 |
| 4445-0039 | Intake Adapter 2-1/2"MNST X 3" FNST Swivels with plug. | 269 |
| 4445-0041 | Front/Rear Intake Drain Valves to be located inside of the heat pan. Valves to be a 3/4" bleeder valve with 1/4 turn control located under officer side running board. | 180 |
| 4445-0042 | Storz Connector 4"FNPT x 4" Storz 30Deg Elbow with Tethered Cap For rear intake. | 381 |
| 4445-0048 | Intake pressure relief valve Task Force Tips. | 495 |
| 4445-0049 | Intake relief valve outlet to be extended to the side of the truck under the front body compartment. Includes tag that reads "Intake Pressure Relief Outlet - Do Not Cap". | 318 |
| 4445-0050 | Intake adapter 5" FNPT x 6" MNST for rear intake. | 585 |
| 4445-0052 | Recessed front suction intake swivel in bumper 3" in tray using aluminum smooth plate with black Scorpion coating (IPOS diamond plate). | 1163 |
| 4445-0054 | Intake Adapter 5" FNPT x 4" MNST for Front Rear or Side Intake with 4" Cap. | 475 |
| 4445-0055 | Intake adapter 5" FNPT x 5" MNST for front intake.The 5" front intake adapter shall be mounted so the threads approximately 2" from the bumper (Flush+2). | 436 |
| 4445-0056 | Storz Connector 5" FNPT x 4" Storz 30 Degree Elbow with Tethered Cap For Rear Intake. | 496 |
| 4445-0058 | 5" Check Valve shall be install in front intake to prevent back flow. | 1219 |
| 4445-0059 | Manual override access door to be on officer's side pump panel to access the override on the front intake electric valve. | 95 |
| 4445-0060 | Front intake bleeder valve to be located adjacent to inlet at front bumper. | 100 |
| 4445-0062 | 2.5" Left Aux Intake shall be as located approximately 6" below main pump inlet offset to rear. | 394 |
| 4445-0063 | Storz Connector 5"FNPT x 5" Storz with Tethered Cap for front intake. | 406 |

| Item No. | Description | |
|---|---|---|
| 4445-0067 | | 95 |
| | Manual override access hole to be supplied in rear pump panel to access the override on the 4" tank to pump .Wrench required for manual override shall be located in vicinity of rear access panel. | |
| 4445-0068 | Storz Connector 5"FNPT x 5" Storz with Tethered Cap For front/rear intake. | 406 |
| 4445-0069 | Intake Adapter 5" FNPT x 4.547 PHOENIX 6 TPI with cap for Front or rear intake. | 705 |
| 4445-0070 | Waterous Intake Pressure Relief Valve controls for pump and intakes to be located behind officer side pump panel. | 108 |
| 4445-0071 | Front Intake Swivel 5" Painted Job Color | 2330 |
| 4445-0072 | Intake adapter 5" FNPT x 6" MNST for rear intake with rocker lug cap. | 584 |
| 4445-0074 | 2.5" Aux Intake shall be as located approximately 12" awayfrom main pump inlet offset to rear. | 394 |
| 4445-0075 | Manual override knob on officer's side pump panel for front intake electric valve. | 368 |
| 4445-0079 | Intake Adapter 4" FNPT x 5" MNST with cap for Rear Intake | 475 |
| 4445-0080 | Intake pressure relief valve Trident Air Max with adjustment knob and pressure gauge. | 1550 |
| 4450-0007 | 1" Tank Fill Akron Manual Valve | 448 |
| 4450-0008 | 1.5" tank fill Akron manual valve. | 1021 |
| 4450-0009 | 1.5" Tank Fill Hale Manual Valve | 1181 |
| 4450-0010 | 2" tank fill Akron manual valve. | 1225 |
| 4450-0011 | 2.5" tank fill Akron manual valve. At pump panel. | 1313 |
| 4450-0012 | 1.5" tank drain Akron manual valve. | 894 |
| 4450-0014 | Direct 2.5" water tank fill with Akron valve. Location: [#LOC]. | 1486 |
| 4450-0020 | 2.5" rear direct tank fill. Location: [#LOC]. | 1483 |
| 4450-0021 | 3" Dual Tank to Pump Akron Manual Valves - Side Panel Controlled | 1746 |
| 4450-0022 | 3" tank to pump Akron manual valve. | 1290 |
| 4450-0023 | 3" Tank to Pump Akron Air Actuated Valve | 1808 |
| 4450-0025 | 4" Tank to Pump Akron Electric Valve for Rear Mount | 4694 |
| 4450-0026 | 5" Rear Jet Dump No Valve. Include 1-1/2" inline valve and high pressure hydraulic hose connected to the 1-1/2" internal tank piping which runs to the rear of the booster tank. | 2480 |
| 4450-0027 | 5" Rear Jet Dump w/5" Manual Butterfly Valve. | 3857 |
| 4450-0028 | Newton Dump with Manually Operated Valve. | 2217 |
| 4450-0029 | Newton Dump Extension. For use with a manually operated Newton Dump. | 1097 |
| 4450-0030 | Newton Directional Chute. Includes chute support bracket and support bolts mounted each side on trailing edge of body/beavertails. | 1783 |
| 4450-0031 | Electric actuated dump valve includes 18" electric telescopic extension and switch. | 5997 |
| 4450-0032 | 2" Tank Fill Akron Electric Valve | 3019 |
| 4450-0034 | 2.5" Tank Fill "AutoFill" Automatic Tank Fill Valve. Location: [#LOC]. Requires Class 1 tank gauge. | 8690 |
| 4450-0035 | 2.5" Direct Tank Fill Location: [#LOC] | 1363 |
| 4450-0037 | 4" Tank To Pump Akron Air Valve for Rear Mount | 4049 |
| 4450-0038 | Hale 4" Air Tank to Pump for CAFSPRO Foam System. | 4886 |
| 4450-0054 | 2.5" Tank Fill Hale Manual Valve | 1725 |
| 4450-0055 | Hale 4" Manual Tank-to-pump | 3688 |
| 4450-0056 | 3" Air Tank to Pump for Cafspro Foam System with4" plumbing. | 2528 |
| 4450-0057 | 3" Tank to Pump Hale Manual Valve | 1471 |
| 4450-0058 | 2.0" Tank Fill Hale Manual Valve | 1403 |
| 4450-0059 | 1.5" Tank Fill Elkhart Manual Valve | 1109 |
| 4450-0060 | 2" Tank Fill Elkhart Manual Valve | 1315 |
| 4450-0061 | 2.5" Tank Fill Elkhart Manual Valve | 1477 |
| 4450-0062 | 3" Tank to Pump Elkhart Manual Valve | 1538 |
| 4450-0063 | Direct 2.5" Water Tank Fill with Hale Valve. Location: [#LOC] | 1656 |
| 4450-0064 | Direct 2.5" Water Tank Fill with Elkhart Valve. Location: [#LOC] | 1651 |
| 4450-0065 | Direct 3" Water Tank Fill. Location: [#LOC]. | 1740 |
| 4450-0066 | Tank-to-pump 4" Akron Air Valve. | 3932 |
| 4450-0067 | Tank-to-pump 4" Akron electric valve. | 4020 |
| 4450-0068 | 3" Tank to Pump w/3.5" Waterous Valve | 1972 |
| 4450-0070 | 2.5" Tank Fill Hale Electric Valve | 3089 |
| 4450-0071 | Tank-to-pump 4" Hale Electric Valve | 5067 |
| 4450-0072 | 2.5" Direct Fill Line into the tank Akron electric valve. Location: [#LOC]. | 3583 |
| 4450-0073 | 3" Tank to Pump w/3.5" Waterous Electric Valve | 3810 |
| 4450-0074 | 2" Tank Fill Akron Valve Handwheel Control | 2379 |
| 4450-0075 | 2" Tank Fill Elkhart Valve Handwheel | 2437 |
| 4450-0076 | 2.5" Tank Fill Akron Valve Handwheel Control | 2465 |
| 4450-0077 | 2.5" Tank Fill Elkhart Valve Handwheel Control | 2520 |
| 4450-0078 | 3" Dual Tank to Pump Akron Air Valves. | 2873 |
| 4450-0080 | 3" Tank to Pump Akron Manual Valve two (2) independent Top mount controls | 1746 |
| 4450-0082 | 1.5" Tank Drain Hale Manual Valve | 1007 |
| 4450-0083 | 1.5" Tank Drain Elkhart Manual Valve | 982 |
| 4450-0084 | Auto Tank Fill Valve Plumbing "T" into Left and Right Fill Thieft with check valves. | 1595 |

| Item No. | Description | |
|---|---|---|
| 4450-0085 | 3" Tank to Pump Elkhart Unibody Manual Valve | 1636 |
| 4450-0086 | 2" Tank Fill Elkhart Unibody Manual Valve | 1318 |
| 4450-0088 | 2" Tank Fill Elkhart Unibody Electric Valve | 2790 |
| 4450-0090 | 1.5" Direct Tank Fill Elkhart Unibody Manual Valve Left Side Panel | 1224 |
| 4450-0091 | 2.5" Direct Tank Fill "AutoFill" Automatic Tank Fill Valve. Location: [#LOC]. | 4917 |
| 4450-0092 | 3" Tank to Pump Akron Valve Hand Wheel Control. | 2663 |
| 4450-0093 | Tank-to-pump 3" Akron Electric Valve | 3754 |
| 4450-0095 | 2" Tank Fill Hale Electric Valve | 3019 |
| 4450-0096 | Electric 3" Akron tank to pump. Controller located on pump control panel. | 3620 |
| 4450-0097 | Electric 3" Hale tank to pump. Controller located on pump control panel. | 3620 |
| 4450-0098 | 2.5" Tank Fill Akron Electric Valve with 9323 controller. | 3194 |
| 4450-0099 | 3" Tank to Pump Elkhart Unibody Air Actuated Valve | 1820 |
| 4450-0100 | Direct Rear 2.5" Water Tank Fill [#LOC] with 2.5"Check Stainless steel Technocheck Valve. | 1219 |
| 4450-0101 | Newton Dump with electrically actuated valve and manually actuated chute. Electric dump valve control to be located to the driver side rear within reach from the ground. | 5426 |
| 4450-0102 | Direct 1" Water Tank Fill Plumb to the fill Tower and Terminate with .75 Female Hose Bib. Location: driver side pump panel. | 574 |
| 4450-0103 | Direct Rear 2.5" Water Tank Fill with 2.5"Check Stainless steel Technocheck Valve. Location: [#LOC] | 1219 |
| 4450-0104 | 6" Rear Gravity Dump No Valve | 2862 |
| 4450-0105 | 3" Tank Fill Akron Manual Valve | 1725 |
| 4450-0106 | 6" Rear Jet Dump w/6" Electric/Air Butterfly Valve with Control Switchs in Cab and Pump operator panel side Rear. | 4098 |
| 4450-0107 | Direct 2.5" water tank fill with 3" Elkhart manual valve. Location: [#LOC]. | 1903 |
| 4450-0108 | 2" tank fill Akron 9313 electric valve. | 3019 |
| 4450-0110 | Tank-to-pump 4" Akron electric valve. | 4020 |
| 4450-0111 | 4" Tank to Pump Akron Electric Valve for Rear Mount | 4694 |
| 4450-0112 | Electric 3" Akron tank to pump. Controller located on pump control panel. Include 9323 controller. | 3620 |
| 4450-0113 | 5" Rear Jet Dump (No valve). For use with a center slam strip rear end. | 2239 |
| 4450-0114 | 3" Tank to Pump Electric Over Air Actuated Valve. (For Pump&Roll Operation) | 1916 |
| 4450-0116 | 2.5" Tank Fill Elkhart Unibody Manual Valve | 1477 |
| 4450-0117 | Tank-to-pump 4" Elkhart Unibody Electric Valve | 4020 |
| 4450-0118 | Direct 2.5" Water Tank Fill with Elkhart Unibody Valve. Location: [#LOC] | 1651 |
| 4450-0119 | 3" tank to pump Akron manual valve w/4" tank connection. | 1316 |
| 4450-0120 | 2.5" Rear Tank Inlet. Includes Water Level Gauge Located in B1 Compartment | 1591 |
| 4450-0121 | 3" Tank to pump Akron air actuated valve w/4" tank connection. | 1808 |
| 4450-0122 | 3" Tank To Pump Akron Electric Actuated Valve w/4" Plumbing. Include 9323 controller. | 3710 |
| 4450-0123 | Direct 3" Tank Fill Akron Electric Valve with control at pump operator panel valve Location: [#LOC] | 3620 |
| 4450-0124 | 3" Tank To Pump Elkhart Unibody Manual Valve w/4" Plumbing. | 1381 |
| 4450-0125 | 3" Tank To Pump Elkhart Unibody Air Actuated Valve w/4" Plumbing | 1910 |
| 4450-0126 | Newton Dump with Manually Operated Valve. Model 1060 with 6" Extendable Handle. | 2222 |
| 4450-0127 | 2.5" Tank Fill "AutoFill" Automatic Tank Fill Valve with IntelliTank level gauge located behind officer side pump panel. Location: [#LOC]. | 8690 |
| 4450-0131 | 2.5" Tank Fill Elkhart Unibody Electric Valve | 3333 |
| 4450-0132 | 3" Tank To Pump Elkhart Unibody Electric Actuated Valve w/4" Plumbing | 3728 |
| 4450-0133 | 3" Tank To Pump Akron air actuated valve w/4" plumbing from the tank to the valve or check. | 1808 |
| 4450-0134 | 3" Tank To Pump Akron Manual Valve w/ Trident Hand Wheel Control and 4" tank connection. | 3242 |
| 4450-0135 | 4" tank to pump with Akron air actuated valve. For use with rear mount pump. | 3117 |
| 4450-0136 | 4" tank to pump with Elkhart air actuated unibody valve. For use with rear mount pump. | 3117 |
| 4450-0137 | 4" tank to pump with Akron electric valve. For use with rear mount pump. | 3568 |
| 4450-0138 | 4" tank to pump with Elkhart unibody electric valve. For use with rear mount pump. | 3568 |
| 4450-0139 | 2" tank fill with Akron manual valve. For use with rear mount pump. | 1158 |
| 4450-0140 | 2" tank fill with Akron electric valve. For use with rear mount pump. | 2787 |
| 4450-0141 | 2" tank fill with Elkhart unibody manual valve. For use with rear mount pump. | 1158 |
| 4450-0142 | 2" tank fill with Elkhart unibody electricl valve. | 2787 |
| 4450-0145 | Direct 2.5" Tank Fill Elkhart Unibody Electric Valve w/30 degree droop adapter with swivel/plug and control at pump operator panel. Location: driver side rear B1 compartment. | 3583 |
| 4450-0146 | Tank-to-pump 3" Elkhart Unibody Electric Valve | 3352 |
| 4450-0148 | 4" rear direct tank fill. Includes handwheel control swivel with droop with cap and retainer. Located to [#LOC] of the rear body. | 2821 |
| 4450-0149 | 2.5" rear direct tank fill. Includes swing handle control swivel with droop and cap with retainer. Located to [#LOC] of the rear body. | 1368 |
| 4450-0156 | 3.0" Tank Drain Akron Air Actuated Valve. | 1808 |

| Item No. | Description | |
|---|---|---|
| 4450-0158 | Rear tank dump. Includes stainless finish steel assembly with electrically actuated valve. For use with slip on extension and chute. Includes Slip-on stainless steel dump extension and chute with beavertail mounted removable support arm bracket and tailboard mounted storage tray (officer side) with retaining straps. | 5997 |
| 4450-0160 | Bush Pack 1" Fill with 1" Cam-Lock fitting located on pump operator pump panel. Include a 3' length of 1" clear hose. | 456 |
| 4450-0161 | Direct .75" Water Tank Fill Plumbing to Terminate with .75 Female Hose Bib.Location: [#LOC] | 574 |
| 4450-0162 | Direct 2.5" water tank fill with Akron valve. Location: Driver side rear of steamer Top Mount Control. | 1643 |
| 4450-0163 | Direct 3" water tank fill. Location: Driver side pump panel. | 1740 |
| 4450-0164 | Direct 2.5" Tank Fill Akron Electric Valve with Dual Control (1) control at the valve and (1) at the pump operator panel. Valve location officer side rear. | 4317 |
| 4450-0166 | Additional 3" Tank To Pump Akron Manual Valve w/4" plumbing. Shall include internal plumbing to the rear of the tank into the rear sump on officer side. | 2375 |
| 4450-0169 | 4" rear direct tank fill. Includes handwheel control with 5" Swivel Storz elbow and cap. Located to [#LOC] off rear of body | 3326 |
| 4450-0170 | Rear tank dump. Includes stainless finish steel assembly with electrically actuated valve. For use with slip on extension and chute. Includes beavertail mounted removable support arm bracket. Slip-on stainless steel dump extension with tailboard mounted storage tray (officer side) with retaining straps and chute mounted in B1 compartment above the dump. | 5997 |
| 4450-0171 | 2.5" rear direct tank fill. The 2.5" direct water tank fill connection shall include an inlet strainer a 2.5" FNST chrome inlet swivel w/double male nst adapter and a chrome cap with cable. [#LOC] of the rear body. | 1368 |
| 4450-0172 | 4" Direct Tank Inlet/Outlet w/4" Elect Valve. Include 4" plumbing strainer and terminate with 4"FNST X 5" storz adapter w/cap. Location at left side pump panel. | 4694 |
| 4450-0174 | 2.5" Direct Tank Fill Akron Electric Valve with Dual Control (1) control at the valve and (1) at the pump operator panel. Valve location officer side rear. | 4582 |
| 4450-0175 | 4" rear direct tank fill. Includes electric dual control (1)operator panel (1) at valve with 4" Swivel Storz elbow and cap. Located to (1) left and (1) right side off the rear body | 4262 |
| 4450-0176 | 3" Tank to Pump Electric Over Air Actuated Valve w/4" Plumbing.. Include (1) control in cab and (1) control pump operator panel). | 1915 |
| 4450-0181 | Hose bib female direct tank inlet 3/4" with valve. Location Officer side pump panel. | 342 |
| 4450-0182 | Rear tank dump. Includes stainless finish steel assembly with air actuated valve on top of dump assembly. Includes integral swivel chute with manual extension. | 6737 |
| 4450-0183 | 4" rear direct tank fill. Includes handwheel control with cap and retainer. Valve to be Located on rear tailboard officer side. Include stainless steel plumbing from the top of the tank to tailboard. A 2.5" Direct inlet shall be"T" into the 4" piping up high. | 4787 |
| 4450-0184 | Hose bib female direct tank inlet 3/4" with valve. Location Driver side pump panel. | 342 |
| 4450-0185 | 3" Tank to Pump Electric Over Air Actuated Valve. (For Pump&Roll Operation) | 1915 |
| 4450-0186 | 2.5" Tank Fill "AutoFill" Automatic Tank Fill Valve. Location: [#LOC]. | 8912 |
| 4450-0188 | Rear tank dump. Includes painted steel assembly with manually actuated valve on top of dump assembly. Includes integral 6012 series swivel chute with manual telescopic extension and with locking system. | 4196 |
| 4450-0190 | Rear tank dump. Includes painted steel assembly with electric actuated valve on top of dump assembly. Includes integral swivel chute with manual telescopic extension and locking system.. | 5908 |
| 4450-0192 | Rear tank dump. Includes stainless steel assembly with electrically actuated 1070 dump valve. Includes integral swivel chute with manual extension. | 7656 |
| 4450-0193 | Driver and officer side tank dumps. Includes stainless steel assembly with electrically actuated valve. For use with flip chute. | 5454 |
| 4450-0195 | Rear tank dump. Includes stainless steel assembly with manually actuated valve on top of dump assembly with quick release pin to allow for folding down handle. Includes integral swivel chute with manual extension. | 5473 |
| 4450-0196 | Slip-on stainless steel dump extension chute. | 946 |
| 4450-0197 | 6" Rear Jet Dump 36" Extension Chute w/6" Female Cam Lock. | 1002 |
| 4450-0199 | Reverse push/pull handle on 3" tank to pump Akron manual valve. The "in" position will be open and the "out" position will be closed. | 62 |
| 4450-0201 | 4" Rear Direct tank fill. Includes Fireman Friend 4" valve with 5" Storz elbow adapter and cap. Located to [#LOC] of the rear body | 3053 |
| 4450-0202 | Rear tank dumps. Includes stainless steel assembly with electrically actuated valve with flip chute. | 4211 |
| 4450-0205 | Direct 4" Tank Fill Akron Electric Valve with Dual Control (1) control at the valve and (1) at the pump operator panel. Valve location [#LOC]. | 5042 |
| 4450-0206 | 4" rear direct tank fill. Includes handwheel control swivel with droop with cap and retainer. Include 3/4" bleeder. Located to [#LOC] of the rear body. | 2787 |
| 4450-0207 | 2" Tank to Pump Electric Over Air Actuated Valve. (For Pump&Roll Operation) | 1360 |
| 4450-0208 | Rear Tank Inlet 3". Includes Water Level Gauge Located in B1 Compartment. | 1995 |

| Item No. | Description | |
|---|---|---|
| 4450-0210 | 2" tank fill Akron electric valve & Navigator Pro 9323 Controller. | 2942 |
| 4450-0211 | 2.5" Direct Tank Fill "AutoFill" Automatic Tank Fill Valve. Waterous (Auto Fill) shall be "T" into both side 6" intake front and rear 5" intake with a special manifold and check valves. | 6070 |
| 4450-0212 | Rear tank dump. Includes steel assembly with manually actuated valve on top of dump assembly. Includes integral 6012SW swivel chute with manual telescopic extension and swivel to have seven position lock system. | 4196 |
| 4450-0213 | Newton dump switch to have a red flip up cover (or bezel). | 59 |
| 4450-0215 | 2" tank fill Akron Electric Valve & Navigator 9325 controller. Controller only no flow or pressure reading require. | 2970 |
| 4450-0216 | Tank-to-pump 4" Akron electric valve with Navigator 9325 Controller. Controller only no flow or pressure reading require. | 4020 |
| 4450-0217 | 2.5" Direct foam tank fill Elkhart Unibody manual valve. Plumbing to be reduced to 2" after the valve. Location: [#LOC]. | 1477 |
| 4450-0218 | 6" Rear Gravity Dump No Valve terminate with 6" NST and cap. | 2978 |
| 4450-0219 | Rear tank dump. Includes painted steel assembly with manually actuated valve on top of dump assembly. Includes integral 6012SW swivel chute with manual telescopic extension and swivel to have seven position lock system. | 4827 |
| 4450-0223 | 4" Rear Direct tank fill. Includes Fireman Friend 4" valve with 4" MNST adapter and cap. Located above lowered B1 compartment in upper smooth plate bolt on panel. | 3053 |
| 4450-0224 | 4" tank to pump with Hale Valve air actuated unibody valve. | 3446 |
| 4450-0226 | 4" Rear Direct tank fill w/4" check valve and pipng. Inculde a 4" MNST adapter and cap. Located officer side rear. | 2283 |
| 4450-0228 | Rear tank dump. Includes stainless steel assembly with manually actuated valve on top of dump assembly. Includes integral 6012 swivel chute with manual telescopic extension and with locking system. | 6072 |
| 4450-0229 | 3" Tank Fill Akron Valve Handwheel Control | 2596 |
| 4450-0230 | 3.5" Tank To Pump Akron Manual Valve w/4" Plumbing. Piping from the tank to the valve to be 4". | 1610 |
| 4450-0236 | 2" Tank Fill Elkhart Unibody Valve Handwheel | 2436 |
| 4450-0237 | 3" Tank To Pump Elkhart Unibody Manual Valve w/4" Plumbing. Include manual hand wheel control. | 2037 |
| 4450-0238 | Tank-to-pump 4" Akron electric valve with Navigator 9323 Controller. | 4020 |
| 4450-0239 | Direct 2.5" water tank fill with Akron valve. Location: Officer side rear of steamerl. Control at pump operator panel. | 1643 |
| 4450-0240 | 5" Rear Jet Dump w/5" Akron Manual Butterfly Valve. Include a 5" Ames female coupler connection. | 4262 |
| 4450-0241 | 4" rear direct tank fill. Includes handwheel control with 4" Swivel Storz elbow and cap. Located to officer's side off rear of body | 3326 |
| 4450-0242 | 6" Rear Gravity Dump with 6" manual hand wheel control valve to terminate with 6" MNST connection with cap.. | 5399 |
| 4450-0243 | Direct 2.5" Water Tank Fill with Firemen Friend high flow Valve. Location: B1. | 1706 |
| 4450-0249 | 4" rear direct tank fill. Includes handwheel controll with cap. Located to [#LOC] of the rear body. | 2787 |
| 4450-0250 | 2.5" Direct Tank Fill "Elkhart AutoFill" UBEC1AT Automatic Tank Fill Valve. Location: off driver side MIV intake valve. | 5254 |
| 4450-0251 | 4" Tank to Pump Akron Valve Hand Wheel Control. | 4469 |
| 4450-0254 | Direct 2.5" Tank Fill W/2.5" Electric/Air Valve. Include 2.5" swivel/plug and control at pump operator panel. Location: Rear center body above B1. | 1502 |
| 4450-0255 | 4" Rear Direct tank fill with bleeder. Includes Fireman Friend 4" valve with 4" Storz elbow adapter and cap. Located to officer of the rear body. | 3166 |
| 4450-0256 | 2.5" Rear Direct tank fill. Includes Fireman Friend 3" valve with 4" body to terminate with 2.5" FNST adapter 30 degree droop and plug. Location; B1 | 1897 |
| 4450-0257 | 1.5" Tank Drain Elkart Manual Valve with pull cable control at left pump panel. Valve shall be located at the tank sump and extend plumbing below frame rail. | 939 |
| 4450-0258 | 1.5" Tank Fill/Re-circulation line Akron manual valve. | 1021 |
| 4450-0259 | 1.5" Tank Fill/Re-circulation line Elkhart manual valve. | 1021 |
| 4450-0261 | 2.5" Tank Fill Waterous 2.5" Valve. | 1610 |
| 4450-0262 | Direct 2.5" Water Tank Fill with Firemen Friend high flow Valve. Location: [#LOC]. | 1706 |
| 4450-0263 | Rear tank dump. Includes stainless steel assembly with manual actuated valve on top of dump assembly. Includes integral manual extension chute. | 3078 |
| 4450-0264 | Second 3" tank to pump Akron manual valve w/4" tank connection. | 1316 |
| 4450-0266 | 5" Rear Jet Dump w/5" Elect/Air Butterfly Valve. Jet manual valve control at operator pump panel. Air actuated valve control located (1) in cab and (1) at left rear of body. | 4277 |
| 4450-0267 | 2.5" Direct Fill Line into the tank Elkhart electric valve. Location: driver side pump panel. | 3583 |
| 4450-0268 | 2.5" rear direct tank fill. The 2.5" direct water tank fill connection shall include an inlet strainer a 2.5" FNST chrome inlet swivel w/double male nst adapter and a chrome cap with cable. Valve to be Located down low (1)driver and (1)officer side rear. Fill to be piped internally to the top of the water tank to reduce head pressure during filling. | 1584 |

| Item No. | Description | |
|---|---|---|
| 4450-0269 | 3" Dual Tank to Pump Akron Manual Valves with 4" tank connection- Side Panel Controlled. | 2871 |
| 4450-0271 | 5" Rear Jet Dump w/5" Electric/Air Butterfly Valve to terminate w/5" Ames female coupler connection with jet Control at Pump operator panel and 5" dump valve control at left side rear. | 5284 |
| 4450-0272 | 2.5" Direct Fill Line into the tank Elkhart electric valve. Location: driver side pump panel. | 3583 |
| 4450-0273 | Direct 2.5" Water Tank Fill with Akron manual/Firemen Friend Valve. Location: Officer side rear below ladder tunnel. Include 2.5" stainless steel pipe and/or high pressure flexible hose from the connection to the water tank. | 2947 |
| 4450-0275 | 16" Rear tank dump. Includes stainless steel assembly with electrically actuated valve. (NO EXTENSION) | 2728 |
| 4455-0004 | Gasket Material around all Discharges Intakes and Handle Slots on Pump Panel to hold in heat of Module Plumbing | 1086 |
| 4460-0000 | Air outlet w/snubber valve. Location: [#LOC]. | 298 |
| 4460-0001 | Air blow-out for: [#LOC]. | 280 |
| 4460-0002 | Hose reel blow-out primary. | 286 |
| 4460-0004 | All tags installed on the exterior of the apparatus shall be mechanically fastened with stainless steel screws. These include but not limited to tags installed on the pump module body cab and bumper. Pump panel tags shall be mechanically fastened regardless whether the panel is enclosed behind a door. | 1402 |
| 4460-0005 | Fire Shop Bezel Chrome - Standard 2.5" Gauge | 44 |
| 4460-0006 | Radiator Fill Valve on Pump Panel. | 330 |
| 4460-0007 | Air outlet with snubber valve and 25' hose. Location: [#LOC]. | 335 |
| 4460-0008 | Air Outlet Valve to operate off of CAFS System Compressor. Location: [#LOC]. | 412 |
| 4460-0009 | Pump panel tags special color. (Must specify.) | 353 |
| 4460-0010 | Pump panel tags - Special label. (Must specify.) | 301 |
| 4460-0011 | OK To Pump Light - Pump Panel Mounted - Green .75" Light. Located near pressure governor. | 79 |
| 4460-0013 | Air Outlet Valve. Plumbed from the reservoir tank. Includes quarter turn valve. Location: [#LOC]. | 352 |
| 4460-0014 | Check Engine and Stop Engine light mounted on pump panel. Wire lights to pump module mounted alarm. | 302 |
| 4460-0017 | Class 1 Color Coded Bezel Chrome - 2.5" Gauge. | 28 |
| 4460-0018 | Class 1 color coded bezel chrome - 3.5" gauge. | 33 |
| 4460-0021 | Diagramatic Vinyl Side Mount Pump Panel Label of the discharges & preconnects specified color coding for handles and gauges. | 2144 |
| 4460-0022 | Stainless steel plates for all discharges and intakes behind the pump panel access doors each side. Stainless steel plates to be mounted on the valve with rubber gasket to seal opening. | 1251 |
| 4460-0023 | Span Color Coded Bezel - 2.5" Gauge | 12 |
| 4460-0024 | Span Color Coded Bezel - 3.5" Gauge | 12 |
| 4460-0025 | Cut-out on officer side pump panel with expended metal. Cut-out to be approx. 14" wide x 6" high to provide sight to cord reel in pump house. Cut-out to be located above cord reel rollers on pump panel. | 171 |
| 4460-0026 | CAFS Air Outlet Valve Recess Driver side Pump Panel with door. | 416 |
| 4460-0027 | Diagramtic vinyl rear mount pump panel labeling of discharges and/or preconnects. Includes rear panel (with hosebed deck gun) and front discharge layouts (two (2) views- No top view). | 2144 |
| 4460-0028 | OBSOLETE - USE 4460-0004 | 463 |
| 4460-0029 | All exterior 1x3 and .1/2x1 tags shall be Vision Mark tags. | 781 |
| 4460-0031 | Attach Escutchion Plates with Thunb Latch on Officer Side. | 206 |
| 4460-0032 | Push/Pull Rod Extrusion at pump panel to be thru bolted with nuts IPOS nut cert. | 105 |
| 4460-0033 | CAFS Air outlet .75 valve with Handle and Quick Disconnect. Location: [#LOC] | 463 |
| 4460-0035 | Diagramtic Vinyl Overlay Rear Mount Pump Panel. All Foam controls and Foam Discharges Yellow Intakes Blue Water Discharges Red and Pump and Engine Gray. | 2144 |
| 4460-0038 | Diagramtic Vinyl Overlay Pump Operator Panel. All controls and Discharges and Intakes. | 2144 |
| 4460-0039 | Innovative Controls Color Coded Bezel Chrome - 2.5" Gauge. | 120 |
| 4460-0040 | Discharge Escutcheon Plates NFPA Color Coded to match photos in file with vinyl overlay shall be around each discharge outlet on driver and officer pump panel. | 565 |
| 4460-0042 | Diagramtic Top Mount Pump Panel Label of the discharges & preconnects specified color coding for handles and gauges.. | 5433 |
| 4460-0043 | Pump panel tags mechanically fastened with screws. | 463 |
| 4460-0045 | Innovative Controls Tags all plumbing and body 1x3 tags shall be Innovative Controls. To include round tag for TM controls if applicable. | 796 |
| 4460-0046 | Innovative Control Noshok 4" Master Gauge Bezel. | 129 |
| 4460-0048 | Innovative Control 7.75" Dia Pump Intake Color Code Bezel Trim Ring. | 138 |
| 4460-0049 | Innovative Control 4" Dia Pump Intake/Discharge Color Code Bezel Trim Ring. | 126 |
| 4460-0050 | Innovative Controls Foam Discharge Identifing label shall be installed in recessed areas on each foam discharge gauge bezel. | 11 |
| 4460-0051 | Speaker cut out with "E-ONE" stainless steel grille. Located pump operator panel. For dealer install speaker. | 149 |
| 4460-0059 | Class 1 color coded bezel gauge trim ring - 2.5" Gauge | 42 |

| Item No. | Description | |
|---|---|---|
| 4460-0060 | Color coded trim rings around all inlets and outlets for both driver and officer side. The side discharge outlets shall be color coded and labeled to correspond with the discharge identification tag. | 1451 |
| 4460-0061 | Air outlet with 3/8" valve 1/4 turn and 25' hose. Location:driver side | 394 |
| 4460-0062 | Air outlet w/3/8" valve. Location: Officer side pump panel. | 329 |
| 4460-0063 | Innovative Control 5.5" Dia Pump Intake/Discharge Color Code Bezel Trim Ring. | 127 |
| 4460-0066 | Diagramtic Vinyl Pump Panel Label of the discharges & preconnects outlets. Location; On forward wall of L1 compartment adjacent to pump operator panel. Specified color coding. | 2144 |
| 4460-0067 | Officer side pump panel shall include an access door to provide access to the cab tilt switch and manual jack as mounted. | 218 |
| 4460-0069 | Class 1 color coded bezel gauge trim ring - 3.5" gauge. | 47 |
| 4460-0070 | Fire Shop Trim Ring/Collar Chrome w/color code insert - Side Discharge/Intake | 107 |
| 4460-0073 | Pump Panel Tags 1" x 3" Addition label for each TM Control handles. | 77 |
| 4460-0074 | Air blow-out for:Frt Jumpline .75" lift lever turn valve IPOS. | 333 |
| 4460-0075 | Water/Foam Capacity label mounted adjacent to level gauges. | 62 |
| 4460-0077 | Foam tank tag colors on PPNL to match color of fill towers on unit IPO standard RED. | 28 |
| 4460-0078 | Pump panel tags special color. #1 -Red Crosslay #2 -Yellow 2" tank fill- Black 3" tank to pump- Black 2.5" Left Intake - Black 2.5 Left rear dis -Blue 3" Deck Gun - Grey 2.5 Left Dis - Pink 2.5 Right Dis- Green 4" Right Dis- Purple. | 353 |
| 4460-0079 | Pump Panel Tags 1" x 3" Additional label for tank to pump control handle. The "in" position will be open and the "out" position will be closed. | 32 |
| 4460-0080 | Diagramatic Vinyl Overlay Rear Mount Pump Panel Label of the discharges & preconnects specified color coding for handles and gauges. | 2144 |
| 4460-0081 | Stainless steel trim plates for all discharges intakes and pump inlets on hinge side pump panels. | 113 |
| 4460-0083 | Pump panel NFPA warning tags special location. | 51 |
| 4460-0085 | CAFS Air Outlet Valve Recess Driver side Pump Panel with door. | 416 |
| 4460-0086 | Air blow-out with Innovative Control 1/4" valve w/1/4 turn "T" handle and label for: [#LOC]. | 268 |
| 4460-0087 | Hose reel blow-out with Innovative Controls 1/4" valve w/1/4 turn handle. | 268 |
| 4460-0088 | Air outlet with Innovative Control 1/4" valve w/1/4 turn "T" handle and label for: [#LOC]. | 268 |
| 4460-0090 | All single tags placed directly on the pump panel to be mechanically fastened with screws. | 463 |
| 4460-0095 | Air outlet with Innovative Control 1/4" valve w/1/4 turn "T" handle w/label and 25' hose. Location: driver side | 394 |
| 4460-0096 | Speaker Grille Located on the pump operator panel. | 273 |
| 4465-0003 | FRC In-Control pressure governor. Includes engine and master pump gauges. | 6123 |
| 4465-0005 | Class 1 Captain pressure governor. | 3240 |
| 4465-0007 | Class1 Command Master pressure governor. Includes pump intake pressure and discharge pressure throttle relief tank level(s) water oil volt and tachometer. | 5931 |
| 4465-0008 | FRC PumpBoss Pressure Governor. Includes engine gauges. | 3011 |
| 4465-0009 | FRC Pro-S Pressure Governor | 3178 |
| 4465-0010 | FRC In-Control pressure governor TGA200. Includes engine transmission and master pump gauges. | 6190 |
| 4465-0011 | Class 1 TPG pressure governor. Includes water oil volt and tachometer. | 2498 |
| 4465-0012 | Fire Commander II pressure governor. Includes engine gauges Pump Ditigal Master Gauges. Detroit engines only. | 5923 |
| 4465-0013 | FRC In-Control pressure governor. Includes engine and master pump gauges.The discharge pressure display shall show pressures from 0 to 4000 kPa. The intake pressure display shall show pressures from -100 to 4000 kPa. | 6123 |
| 4465-0015 | FRC In-Control pressure governor TGA300. Includes engine transmission and master pump gauges. | 4509 |
| 4465-0017 | FRC PumpBoss pressure governor PBA400. Includes engine monitor gauges. | 3011 |
| 4465-0018 | FRC InControl pressure governor TGA400. Includes engine transmission and master pump gauges. | 4509 |
| 4465-0020 | Class 1 TPG Plus pressure governor. Includes master intake and discharge gauges water oil volt and tachometer. | 3336 |
| 4465-0021 | FRC In-Control pressure governor TGA400-A10. Includes engine transmission and master pump gauges. | 4509 |
| 4465-0022 | Class 1 Sun Guard Pressure governor cover. Durable steel construction in black matte finish. Flips up to read controls; lays flat when not in use. | 254 |
| 4465-0024 | The Pressure Governor as mounted on the pump panel shall include a stainless steel shield/visor to shade the display from direct sunlight (the shield/visor shall share the same painted on finish as the pump panel if applicable). | 169 |
| 4465-0028 | Class 1 Sentry pressure governor/ Twister throttle. Includes master intake and discharge gauges water oil tran volt and tachometer. | 3205 |
| 4465-0030 | FRC PumpBoss pressure governor PBA200. Includes engine monitor gauges. | 2596 |
| 4465-0031 | FRC Total Control pressure governor TCA100. Includes engine transmission and master pump gauges. | 3968 |
| 4475-0000 | Pump certification 750-2250 GPM | 2873 |

| Item No. | Description | |
|---|---|---|
| 4475-0003 | | 2873 |
| | Pump certification 750-2250 GPM. To be performed by UL (Underwriter's Laboratories). Stainless steel product only. | |
| 4475-0004 | Pump certification 250-500 GPM | 2061 |
| 4475-0007 | Factory pump test only not thrid party. | 2061 |
| 4475-0008 | Pump Certification 3000 GPM. | 3064 |
| **ELECTRICAL** | | 0 |
| 5010-0002 | Multiplex electrical system for pumper / tanker / rescue. | 3880 |
| 5010-0003 | Multiplex modem kit. Includes cable modem and adapter harness. | 1017 |
| 5010-0004 | Multiplex data logger. | 720 |
| 5010-0010 | Multiplex cab/non-multiplex body electrical system for pumper / tanker / rescue. | 3880 |
| 5010-0013 | Vehicle data recorder - 2009 / 2016 NFPA compliant. Includes occupant detection with display. Display location: [#LOC]. | 2857 |
| 5010-0014 | Vehicle data recorder for commercial cab - 2009 NFPA compliant. Includes occupant detection with display. Display location: [#LOC]. | 1645 |
| 5010-0015 | Additional CrewGuard display for use with VDR. Location: [#LOC]. | 551 |
| 5010-0016 | Multiplex electrical system for rear mount pumper. | 4690 |
| 5010-0024 | Modem for use with the E-ONE multiplex electrical system. | 710 |
| 5010-0036 | V-MUX Electrical system for pumper / tanker / rescue. | 3880 |
| 5010-0037 | Multi-color touch screen display for multiplexed based electrical system. Location: [#LOC]. | 2101 |
| 5010-0049 | Vehicle data recorder - 2009 / 2016 NFPA compliant. Includes occupant detection shown in multiplex display. E-ONE chassis only. | 2465 |
| 5010-0051 | HVAC Controlled through multiplex display(s). | 1297 |
| 5010-0052 | Vista IV touch screen display for V-MUX electrical system. Location: [#LOC]. | 2373 |
| 5010-0053 | Vehicle data recorder for commercial cab - 2009 NFPA compliant. Includes occupant detection shown in multiplex display. | 1054 |
| 5010-0055 | Vista IV display for V-MUX electrical system. Location: [#LOC]. | 2023 |
| 5010-0057 | GPS Module for V-MUX electrical system (Garmin). Includes antenna. Requires Vista display. | 1824 |
| 5010-0059 | VFD Text display for V-MUX electrical system. Location: [#LOC]. | 882 |
| 5010-0065 | Pump and roll screen for multiplex display. Reference specification for details. | 1691 |
| 5010-0067 | GPS Module for V-MUX electrical system (Weldon). Includes antenna. Requires Vista display with touch screen. | 1381 |
| 5010-0069 | Es-Key Multiplex electrical system for pumper / tanker / rescue. | 3880 |
| 5010-0074 | Special programming for multiplex color display (per hour). Requires engineering review and approval to determine feasibility and time. | 60 |
| 5010-0075 | Vista display to have a customized sticker for legend buttons (Reference info in file for new configuration). May require special programming fee. | 590 |
| 5010-0078 | Link2 Vehicle information system for V-MUX electrical system. Does not include required subscription. | 1672 |
| 5010-0079 | Vista display translated to French. | 781 |
| 5010-0081 | Pump and roll screen for multiplex display. Reference specification for details. | 1691 |
| 5010-0084 | Newton Dump control screen for multiplex display. | 609 |
| 5010-0086 | Weather proof Vista display for V-MUX electrical system. Location: [#LOC]. | 4110 |
| 5050-0000 | Vanner Bravo 1800 watt inverter. For use with (2) quartz lights. Includes on/off switch in cab. Inverter to be mounted in a body compartment as close to the chassis batteries as practical (20' max cable length). | 3159 |
| 5050-0001 | Vanner 2600 watt inverter. For use with quartz lights. Includes on/off switch in cab. Inverter to be mounted in cab below rear wall bench seat. | 4878 |
| 5050-0002 | Vanner 2600 watt inverter. For use with (2) quartz lights. Includes on/off switch in L1 compartment next to breaker box. Inverter to be mounted in a L1 up high (20' max cable length). | 4878 |
| 5050-0003 | Vanner 2600 watt inverter. For use with (2) quartz lights. Includes on/off switch in driver overhead console. Inverter to be mounted in L3 up high forward (20' max cable length). | 4878 |
| 5050-0015 | Vanner 2600 watt inverter (NFPA rating at 1400 watts). Includes on/off switch in L1 compartment. Inverter to be mounted in a L1 forward wall up high (20' max cable length). | 4878 |
| 5050-0016 | Vanner 2600 watt inverter (NFPA rating at 1400 watts). Inverter to be mounted in a L1 on permanent shelf (20' max cable length). | 4878 |
| 5050-0017 | Body 110 volt outlets shall have a dedicated breaker within the breaker box for no more than every (2) body mounted receptacles (single outlet duplex etc. as applicable). This is to provide multiple isolated circuits as required that carry no more than (2) receptacles located throughout the body. | 584 |
| 5050-0018 | Vanner Tru-sine 1000 watt inverter. For use with (4) cab interior receptacles when generator is not running or shoreline is not connected. Includes on/off switch in cab. Inverter to be mounted in a body compartment as close to the chassis batteries as practical (20' max cable length). | 2126 |
| 5050-0019 | Inverter prewire for dealer/customer supplied and installed 3KW inverter. Includes 12 volt wiring and A/C cabling to breaker box. Prewire to [#LOC]. | 905 |
| 5100-0000 | Foot switch to control air horns located [#LOC]. | 131 |

| Item No. | Description | |
|---|---|---|
| 5100-0001 | Switch circuit three way. Includes (1) additional switch. An additional switch required for more than two locations. Location: [#LOC]. | 186 |
| 5100-0002 | Momentary switch with 6' pendant for cab tilt. Yellow weatherproof push button at end of coiled cord. Location of switch plug-in: [#LOC] | 414 |
| 5100-0006 | Foot switch to control Q2B located [#LOC]. | 131 |
| 5100-0007 | Foot switch to control electronic siren located [#LOC]. | 131 |
| 5100-0009 | Audible door ajar alarm wired through door ajar light. | 68 |
| 5100-0010 | Additional push button hose reel switch. Location: [#LOC]. | 206 |
| 5100-0011 | Switch 12V for 120-240V (EA). Location: [#LOC]. | 475 |
| 5100-0014 | Air horns to be interlocked through the master warning switch. | 111 |
| 5100-0015 | Back-up alarm override momentary switch located at the cab dash. The switch will allow for overriding the back-up alarm and reset after transmission is shifted again. | 65 |
| 5100-0017 | Wire rear amber through ignition switch. | 88 |
| 5100-0018 | Primary Warning switch to activate all warning lights and siren controls to be located driver's side overhead console. | 196 |
| 5100-0019 | Additional amber warning light override momentary switch located at the cab warning light switch panel. The switch will allow for overriding the rear additional amber warning lights and reset after ignition is turned off. | 356 |
| 5100-0020 | Switch additional 12 volt/15 amp toggle. Location and function: Under driver side cab dash for master battery override. | 223 |
| 5100-0021 | Opticom switch wired through upper level warning switch. | 84 |
| 5100-0022 | Push-button hose reel switch. Location: [#LOC]. | 206 |
| 5100-0023 | Provide a single switch on the cab dash (within reach of the driver and officer) for locking and unlocking of all roll-up doors. The switch is to be red. Label RUD Lock. | 343 |
| 5100-0029 | Stirrup style hose reel switch. Location: [#LOC]. | 206 |
| 5100-0030 | Additional stirrup stlye hose reel switch. Location: [#LOC] | 206 |
| 5100-0036 | Additional programming instructions: [#LOC]. | 138 |
| 5100-0038 | Hose Reel rewind switch located in rubrail. | 105 |
| 5100-0039 | Foot switch(es) mounted on a 45 degree bracket. | 90 |
| 5100-0040 | Micro switch with 2.75'' lever upgrade. Location: (2) hosebed cover (1) ladder rack. | 88 |
| 5100-0042 | Ramsey control with 3' cord for cab tilt in addition to standard toggle. Red/Black weatherproof push buttons at end of cord. Location of switch plug-in: [#LOC]. | 414 |
| 5100-0044 | Rear cab heater switch. Function and location: [#LOC]. | 223 |
| 5100-0045 | Thermostatic controls for pump compt heaters. Thermostat set at freezing temp. | 280 |
| 5100-0046 | Cut-off switch for Q2B main power. Switch to be accessible from driver's seat. | 302 |
| 5100-0047 | Switch household 110V w/ weaterproof cover. Location and function: cab mounted next to air compressor for 120V air compressor | 223 |
| 5100-0048 | Magnetic door ajar switches IPO std for all body compt doors. | 804 |
| 5100-0049 | Ramsey control with 8' cord for cab tilt in addition to standard toggle. Red/Black weatherproof push buttons at end of cord. Location of switch plug-in: [#LOC]. | 414 |
| 5100-0050 | Push button test switch for tank or foam level gauge push button wired "hot" to batteries to allow checking tank level in fire station without having to power up truck electrical system. Located on operator pump panel. | 386 |
| 5100-0052 | Household toggle switch for 110V. Switch plate will be a Crouse Hinds TP7256. Switch will be wire to top plug of duplex recept on rear and be located next to recept. One switch for each top duplex. | 487 |
| 5100-0056 | Hose deployment switch in front bumper tray. Includes hinged plate on bottom of bumper tray with switch on floor and indicator light on pump panel. Requires tray without slats. Location: [#LOC]. | 654 |
| 5100-0060 | Switch for 12V quartz lights to be located on officer side overhead console IPOS. | 138 |
| 5100-0061 | Door ajar alarm override momentary switch located at the cab dash. The switch will allow for overriding the door ajar alarm and reset after transmission is shifted again. | 223 |
| 5100-0063 | Ramsey control with 10' cord for cab tilt. Red/Black weatherproof push buttons at end of cord. Location of switch plug-in: next to manual cab tilt pump | 414 |
| 5100-0064 | AM/FM radio to be connected to radio re-broadcast input of siren. Includes momentary sw on driver's sw panel that will disable connection when master power is cycled. | 356 |
| 5100-0072 | Locate Q2B brake in officer side overhead console IPO standard location of driver side overhead console. | 63 |
| 5100-0073 | Additional programming instructions: wire officer rear quartz light ajar switch through ladder rack controls. | 138 |
| 5100-0086 | Additional programming instructions: clear warning lights to remain on in bloking mode in accordance with Maryland Code Allowance. | 138 |
| 5100-0087 | Ramsey control plug-in for cab tilt in addition to standard toggle. Does not include tether controller. Location: [#LOC]. | 233 |
| 5100-0088 | Linemaster Twin 491-S foot switch to control air horns and Q2B located [#LOC]. | 421 |
| 5100-0089 | Foot switch to control electric fire bell located [#LOC]. | 131 |
| 5100-0090 | Foot switch to control Scream Eagle siren located [#LOC]. | 131 |

| Item No. | Description | |
|---|---|---|
| 5100-0091 | Switch 12V for 110-240V (EA). Location: cab switch panel for rear body quartz light(s). | 475 |
| 5100-0094 | Ramsey control with 15' cord for cab tilt in addition to standard toggle. Red/Black weatherproof push buttons at end of cord. Location of switch plug-in: [#LOC]. | 414 |
| 5100-0095 | Switching controlled through the Multiplex display for 120-240V devices (EA). The 120-240V Multiplex switching utility shall be used for: [#LOC]. | 475 |
| 5100-0098 | Switch additional rocker lock-out safety style. Location and function: [#LOC]. | 223 |
| 5100-0099 | Momentary rocker switch for the Federal Rumbler (secondary siren) located on the driver and officer side overhead panels. The switches will allow for overriding the Federal Signal Rumbler siren and reset after ignition is turned off. | 356 |
| 5100-0100 | Switch additional (2) position shall be installed and properly labeled to enable operator to activate the OEM traffic horn or air horn. The switch shall be located: rear of body driver side approximately 65" above ground level. | 223 |
| 5100-0101 | Switch additional 12 volt/15 amp. Location and function: driver side pump panel for radio speaker as mounted on or near pump panel. | 223 |
| 5100-0102 | A cab interior audible alarm and hazard light. The light shall be blue in color and 2" diameter The alarm and hazard light shall be wired to the light tower to provide a clear indicator of when the light tower is raised or not in the bedded position. The light shall be mounted in the vicinity of the door ajar hazard light. | 165 |
| 5100-0103 | Locate Q2B brake on lower dash between touch screens IPOS. | 63 |
| 5100-0104 | Air horn switch at rear body. Switch to be labeled ''Air Horn''. Location: driver side rear of body approx. eye level (if applicable). | 156 |
| 5100-0105 | Switch momentary. Head lights running lights and tail lights (on with ignition) override momentary switch located at the cab dash. The switch will allow for overriding the head lights running lights and tail lights (turning them off momentarily) after the ignition has been turned on. | 223 |
| 5100-0106 | Thermostatic control for compartment heater. Thermostat set at 60 degrees Fahrenheit to prevent freezing. Location: [#LOC]. | 143 |
| 5100-0107 | Cut-off switch for Q2B main power. Switch to be accessible from officer's seat. | 302 |
| 5100-0108 | Switch circuit three way 12V for 120-240V (EA). Includes (1) additional 12V for 120-240V switch. An additional switch required for more than two locations. Location: [#LOC]. | 475 |
| 5100-0109 | Audible alarm to sound when water level is below 1/4 tank remaining. | 316 |
| 5100-0112 | Ramsey control on officer side cab dash with 3' cord to operate Q2B and air horns. Red switch Q2B Black air horns. | 390 |
| 5100-0115 | Monarch control for cab tilt in place of standard toggle. | 454 |
| 5100-0116 | Weldon 4-button V-MUX switch module. Location [#LOC]. | 454 |
| 5100-0117 | Switch additional momentary 12 volt/15 amp. Location and function: [#LOC]. | 223 |
| 5100-0118 | Door ajar indicator switch for each SCBA air bottle storage compartment door on body wired to "Door Open" indicator inside cab. Switches as optioned are in addition to standard SCBA bottle retainer straps. | 62 |
| 5100-0119 | Rear cab heater Eaton guarded switch. Function and location: [#LOC]. | 223 |
| 5100-0120 | Switch additional guarded toggle. Location and Function: driver side rear of body for rear flood lights. | 223 |
| 5100-0125 | Door ajar indicator switches for all SCBA air bottle storage compartment doors on cab wired to "Door Open" indicator inside cab. | 62 |
| 5100-0127 | Switch panel three way. Includes (7) additional switches. An additional switch required for more than two locations. Location: L1 adjacent to breaker box for front brow lights driver 120V cab/body scene lights officer 120V cab/body scene lights driver 12V cab/body scene lights officer cab/body 12V scene lights and rear 12V scene lights. | 1292 |
| 5100-0128 | Red flip cover for toggle switch. Location: [#LOC]. | 21 |
| 5100-0129 | Switch rear door fully open for dump valve power activation. | 403 |
| 5100-0130 | Weatherproof Eaton rocker switches on pump panel ipo toggle switches. | 255 |
| 5100-0131 | Foot switch(es) mounted on a 30 degree bracket. | 90 |
| 5100-0132 | Switch additional through multiplex display. Function: [#LOC] | 100 |
| 5100-0133 | Switch. Location and function: [#LOC]. | 223 |
| 5100-0135 | Cole Hersee lock out device for master battery switch. Model CLH24505. | 96 |
| 5100-0136 | Locate Q2B brake in officer side switch panel IPO standard location. | 63 |
| 5100-0138 | Push-button hose reel switch on 10' tether located in L1 rearward wall. | 322 |
| 5100-0139 | Foot switch Linemaster model 632S to control electric siren located [#LOC]. Includes 25 degree diamond plate bracket. | 131 |
| 5100-0140 | Ramsey control with 3' cord for cab tilt in place of standard toggle. Red/Black weatherproof push buttons at end of cord. Includes receptacle with cover. Location of receptacle: [#LOC]. | 414 |
| 5100-0141 | Ramsey control with 6' cord for cab tilt in addition to standard toggle. Red/Black weatherproof push buttons at end of cord. Location of switch plug-in: [#LOC]. | 414 |
| 5100-0142 | Switch door ajar additional. Location: front bumper raised lid. | 223 |
| 5100-0144 | Magnetic door ajar switch IPO std for [#LOC] body compt door. | 114 |
| 5100-0145 | Additional driver side overhead switches in addition to vista screen operations. See specifications. | 2893 |

| Item No. | Description | |
|---|---|---|
| 5100-0146 | Switch master activation for Newton Dumps with red cover located within the cab adjacing to Newton Dump control. | 186 |
| 5100-0147 | Ramsey control with 3' cord for cab tilt in addition to standard toggle. Red/Black weatherproof push buttons at end of cord hardwired adjacent to standard toggle. | 414 |
| 5100-0149 | Switch lever 120V shoreline disconnect. Location: Adjacent to shoreline receptacle. | 475 |
| 5100-0150 | Hose Reel rewind switch located in pump module rearward in rubrail. One (1) left and one (1) right side. | 206 |
| 5100-0152 | Locate Q2B brake through multiplex display(s) IPOS. | 63 |
| 5100-0153 | Locate Q2B brake on center lower dash panel IPO standard location. | 63 |
| 5100-0154 | Push-button hose reel switch on 10' tether located in R1 rearward wall. | 322 |
| 5110-0003 | High impact orange ABS plastic handheld spotlight SL-45 Location: [#LOC]. | 236 |
| 5110-0004 | Alternating flasher for headlights. | 379 |
| 5110-0005 | Pre-wire for trailer hitch. Includes stop left turn right turn marker and ground wires. Does not include connector. | 268 |
| 5110-0007 | Audible indicator in cab with rear button. The rear button will be located on the driver's side at the rear behind the hand rail (if applicable). | 387 |
| 5110-0008 | Audible indicator in cab with rear buttons. The rear buttons will be located one each side at the rear behind the hand rail (if equipped). | 427 |
| 5110-0009 | Clock Digital 12/24 Waterproof mounted in cab officer's overhead dash. | 704 |
| 5110-0010 | Receptacle 12V 175A portable winch. Located at rear near trailer hitch. | 396 |
| 5110-0011 | Vehicle Information Control Center for E-One Multiplexed trucks located on Driver's Side. | 6676 |
| 5110-0012 | Vehicle Information Control Center for E-One Multiplexed trucks located on Officer's Side. | 6676 |
| 5110-0014 | Vehicle Information Control Center for E-One Multiplexed trucks located on Officer's Side. Display Only No computer. | 2835 |
| 5110-0015 | Vehicle Information Control Center for E-One Multiplexed trucks located at center of engine cover mounted on swivel bracket. | 7094 |
| 5110-0017 | Back-up alarm 97 dB. | 116 |
| 5110-0018 | 12 volt 12 gauge constant hot lead (24" long) with ground wire. Location: [#LOC]. | 90 |
| 5110-0024 | Back up alarm Grote 107 dB(A). | 296 |
| 5110-0025 | Back up horn system. Includes 12v independent horn (NAPA 730-1047) below officer's side dash 12v independent horn (NAPA 730-1047) at rear of body and Ramsey control switch with 25' tether at rear of body. | 926 |
| 5110-0026 | 12 volt 12 gauge wired through ignition lead (24" long) with ground wire. Location: [#LOC]. | 90 |
| 5110-0027 | Powered equipment rack alarm. To activate while rack is in motion. | 78 |
| 5110-0028 | Code3 model 700 flasher for alternating headlights. | 372 |
| 5110-0030 | Flasher alternating for headlights Whelen model UHF2150A. | 394 |
| 5110-0031 | 12 volt 12 gauge wired to chassis reverse (24" long) with ground wire. Location: back wall of rear bench seat riser. | 90 |
| 5110-0032 | Clock digital 12/24 waterproof mounted in [#LOC]. | 704 |
| 5110-0034 | 4 Pin trailer wiring flat connector. Includes matching plug. Requires trailer wiring pre-wire option. | 105 |
| 5110-0037 | Additional wiring instructions: [#LOC]. | 410 |
| 5110-0040 | Indicator light. Color: [#COL]. Location and function: [#LOC]. | 129 |
| 5110-0041 | 7 pin trailer wiring connector. Requires trailer wiring pre-wire option. | 140 |
| 5110-0042 | Trailer wiring and connector for 2009 NFPA 1901 Type I Type II or Type III trailer. Includes model 12-907 connector on body. Stop/turn/tail circuits shall be connected remaining wires to be coiled up for future use. Trailer end 12-906 shipped loose. | 517 |
| 5110-0043 | Back-up alarm Federal Reactor model 210350 self-adjusting. | 202 |
| 5110-0044 | ABS cover for multiplex PDMs' located in the pump module. | 106 |
| 5110-0045 | Radio interface cable-run a 7-conductor 20 gauge wiring (578865) from the pump panel microphone box to the center overehead area leave a 30" coil of wire at each end. | 625 |
| 5110-0046 | 4 Pin trailer wiring heavy duty round connector. Includes matching plug. Requires trailer wiring pre-wire option. | 117 |
| 5110-0052 | 12V power distribution module. Includes (6) battery hot and (6) switched hot circuits. 100 amps max (IATS). Location: [#LOC]. | 343 |
| 5110-0060 | 12 volt 4 gauge constant hot lead (24" long) with ground wire. Location: [#LOC]. | 270 |
| 5110-0065 | Lighted bumper guide (PR). Bores model 848211 located (1) each side of front bumper extension. | 457 |
| 5110-0066 | Switches in cab (2) for controlling (2) TNT DT 4.0 diesel engine hydraulic power units. Switches to be kill/run/start with indicator light. Run wiring into dunnage area with extra length for dealer installation. | 1177 |
| 5110-0067 | Back up alarm Preco 97 dB(A) warble tone. | 300 |
| 5110-0068 | Handheld flashlight orange Streamlight Litebox flashlight with vehicle mount system. Location: [#LOC]. | 212 |
| 5110-0069 | Back up alarm ECCO model 410 97 dB(A) grommet mount. | 232 |
| 5110-0070 | Vehicle Information Control Center for E-One Multiplexed trucks swivel pedestal mount located at center between driver and officer. Mid engine cabs only. | 7094 |

| Item No. | Description | |
|---|---|---|
| 5110-0079 | Back up alarm Ecco model SA917 87-112dB. | 264 |
| 5110-0082 | Receptacle 12V 175A portable winch. There will be a total of four locate one at each of the receiver. | 1578 |
| 5110-0083 | Receptacle 12V 175A portable winch. There will be a total of three locate one at each of the side and rear receivers. | 1183 |
| 5110-0087 | Tekonsha model Prodigy 2 trailer brake controls wired to connector. Control located in cab accessible to driver. Requires 9-pin connector. | 985 |
| 5110-0088 | Lighted bumper guide (PR) with angled support brackets. Bores model 848211 located (1) each side of front bumper extension. | 591 |
| 5110-0089 | Back-up alarm Ecco model 575 107dB. | 194 |
| 5110-0090 | Breaker box grounding cable. 10' 2Ga cable attached to ground side of breaker box. Includes clamp on end of cable for use with aerial ground pad. | 259 |
| 5110-0094 | Wiring instructions: Dedicated ground wire for 12V distribution module located behind officer seat. | 146 |
| 5110-0109 | Indicator light Weldon 9186-2300. Color: [#COL]. Location and function: [#LOC]. | 129 |
| 5110-0110 | Receptacle 12V 175A portable winch. Located at front near receiver. | 396 |
| 5110-0112 | Back up alarm Preco model 1040. | 201 |
| 5110-0113 | Indicator light. Color: Red. Location and function: pump operator panel for foam pump on. | 129 |
| 5110-0114 | Powered equipment rack alarm; Preco 97dB(A) warble tone. To activate while rack is in motion and through park brake. | 300 |
| 5110-0119 | CAT V cable run. This will include CAT V wire non-plenum. Run cable from microphone box on pump panel to center overhead in cab. | 160 |
| 5110-0120 | Receptacle 12V 175A portable winch. There will be a total of three locate one at each of the side and front receivers. | 1183 |
| 5110-0124 | Audible indicator in cab with rear buttons. The rear buttons will be located [#LOC]. | 427 |
| 5110-0125 | Receptacle 12V 175A portable winch. There will be a total of (2) locate one (1) on each side near under body receivers. | 791 |
| 5110-0132 | Indicator light. Color: Green. Location and function: driver side overhead for jake brake "on". | 129 |
| 5110-0133 | 12 volt 10 gauge constant hot lead (24" long) with ground wire. Location: [#LOC]. | 105 |
| 5110-0135 | Additional wiring overlays to support Whelen 900 series lighting (not OEM installed). Lights shall be installed at a later date. One (1) each side of body on forward upper body corners. | 208 |
| 5110-0138 | Regen indicator light with warning tag . Whelen 500 series TIR6 amber light located in rubrail above exhaust end. Includes warning tag to read "High Exhaust Heat When Flashing". Light to be wired through indicator in cab and park brake. | 347 |
| 5110-0139 | 12 volt 14 gauge wired through ignition lead (36" long) with ground wire. Location: [#LOC]. | 107 |
| 5110-0140 | 12 volt 10 gauge wired through ignition lead terminated in a junction box with ground wire. Location: [#LOC]. | 107 |
| 5110-0143 | Handheld flashlight orange Streamlight HID Litebox flashlight with vehicle mount system. Location: [#LOC]. | 1516 |
| 5110-0144 | Hopkins 7 pin trailer wiring connector model 48495-7 RV blade. Requires trailer wiring pre-wire option. | 144 |
| 5110-0145 | Pre-Wiring for trailer hitch should include a hot 12vdc and back-up light wire at the connector and a wire from the connector to the cab for future electric brake unit in cab. In the cab there should be a wire labeled for brake lights to connect to future electric brake unit. Connector sold separately. | 268 |
| 5110-0146 | Cole-Hersee trailer tail light converter model 48000. Trailer connector sold separately. | 351 |
| 5110-0149 | Generator power shall be supplied to the command desk area. One (1) 12/3 cable shall supply 20 amps with 10' of wire coiled at the command desk area. The wires shall be clearly marked to identify them as 110V/20A generator power. | 389 |
| 5110-0150 | Shoreline power shall be supplied to the command desk area. One (1) 12/3 cable shall supply 20 amps with 10' of wire coiled at the command desk area. The wires shall be clearly marked to identify them as 110V/20A shoreline power. | 389 |
| 5110-0153 | 12V power distribution module. Includes (6) battery hot and (6) switched hot circuits. 100 amps max (IATS). Includes circuit breakers ipo fuses. Location: [#LOC]. | 343 |
| 5110-0154 | Dow Corning 738 white electrical sealant. Apply to all exposed electrical connections. | 370 |
| 5110-0155 | Customer supplied handheld spotlight SL-45 shall be mounted in place. Location: [#LOC]. | 193 |
| 5110-0158 | 12 volt 12 gauge lead (24" long) with ground wire wired to battery saver. Location: [#LOC]. | 90 |
| 5110-0160 | Pollak 7 pin trailer wiring connector model 12-709. Requires trailer wiring pre-wire option. | 208 |
| 5110-0161 | Blue Sea 12V power distribution module model 5025 (2) and (1) 5026 wired through battery hot. Location: (1) 5025 in center cab dash (1) 5026 in forward floor of radio cabinet and (1) 5025 behind officer seat. | 1290 |
| 5110-0162 | Wiring instructions: Dedicated ground wire for 12V distribution module located at driver and officer 3x3 post. | 146 |
| 5110-0166 | Blue Sea 12V power distribution module model 5025 (2) and (1) 5026 wired through ignition hot. Location: (1) 5025 in center cab dash (1) 5026 in forward floor of radio cabinet and (1) 5025 behind officer seat. | 1290 |
| 5110-0169 | Aluminum smooth plate cover for foam controller shall be located on back of controller. | 226 |

| Item No. | Description | |
|---|---|---|
| 5110-0173 | LINE-X package for miscellaneous parts mounted on the body: Includes aerial style or similar brackets used for beacon lights camera shield license plate bracket traffic advisor box (non-recessed only) fabricated shield over traffic advisor fabricated light boxes and other brackets used for mounting scene and warning lights stirrup style switch as applicable. | 282 |
| 5110-0174 | Back up alarm Hella model A1399 SA-BBS-97. | 328 |
| 5110-0179 | Durabak package for miscellaneous parts mounted on the body: Includes aerial style or similar brackets used for beacon lights camera shield license plate bracket traffic advisor box (non-recessed only) fabricated shield over traffic advisor fabricated light boxes and other brackets used for mounting scene and warning lights stirrup style switch as applicable. | 282 |
| 5110-0180 | Collision Avoidance Systems model CAS-4HW rear obstacle detection and proximity system. Includes 4 sensors at rear of vehicle and speaker in cab. | 2086 |
| 5110-0185 | 12 volt 12 gauge constant hot lead (24" long) with ground wire and circuit breaker. Location: [#LOC]. | 150 |
| 5110-0187 | Pre-wire for customer supplied electric fire bell. Includes push button activation switch on center cab dash offset to officer side. | 376 |
| 5110-0188 | Handheld flashlight orange Streamlight Knucklehead Haz-LO LED flashlight with charger. Location: [#LOC]. | 399 |
| 5110-0191 | 12V power distribution module. Includes (12) battery hot circuits. 100 amps max (IATS). Location: [#LOC]. | 343 |
| 5110-0192 | 12V power distribution module. Includes (12) switched hot circuits. 100 amps max (IATS). Location: [#LOC]. | 343 |
| 5130-0000 | Cord reel 150 feet of 12/3 black cord installed on the [#LOC] with an electric rewind. | 2033 |
| 5130-0001 | Cord reel electric with 200' of 10/3 black cable. Locate [#LOC]. | 2400 |
| 5130-0002 | Cord reel electric with 200' of 10/3 yellow cable. Location(s): [#LOC]. | 2710 |
| 5130-0003 | Cord reel electric with 200' of 10/4 black cable. Location: [#LOC]. | 2703 |
| 5130-0004 | Cord reel electric with 200' of 10/4 yellow cable. Location [#LOC]. | 3505 |
| 5130-0006 | Rollers for cord reel mounted on reel. Locate: [#LOC]. | 392 |
| 5130-0007 | Cord connector. Daniel Woodhead 3 wire NEMA 5-15 straight blade female located on cord for reel in [#LOC]. | 91 |
| 5130-0008 | Cord connector. Daniel Woodhead 3 wire NEMA L5-15 twist lock female located on cord for reel in [#LOC] | 95 |
| 5130-0009 | Cord connector. Daniel Woodhead 3 wire NEMA L5-20 twist lock female located on cord for reel in [#LOC]. | 128 |
| 5130-0010 | Cord connector. Daniel Woodhead 4 wire NEMA L14-20 twist lock female located on cord for reel in [#LOC]. | 128 |
| 5130-0011 | Cord connector. Daniel Woodhead 3 wire NEMA L6-20 twist lock female located on cord for reel in [#LOC] | 128 |
| 5130-0012 | Junction box Circle-D with four (4) 3-wire NEMA L5-15 110 volt 15 amp twist lock receptacles. Located on cord for reel in [#LOC]. | 827 |
| 5130-0013 | Junction box Circle-D with four (4) 3-wire NEMA L5-20 110 volt 20 amp twist lock receptacles. Located on cord for reel in [#LOC]. | 827 |
| 5130-0014 | Circle D wall/floor mounting box. Mount at final or ship loose (customer preference). For use with reel located in or on [#LOC]. | 163 |
| 5130-0015 | Junction box Circle-D with two (2) 15 amp straight blade and two (2) 20 amp twist lock receptacles. Located on cord for reel in [#LOC]. | 1045 |
| 5130-0016 | Junction box Circle-D with all twist lock 2-120V and 2-240V outlets. Located on cord for reel in [#LOC]. | 1024 |
| 5130-0017 | Junction box Woodhead with four (4) NEMA L5-15 110 Volt 15 Amp twist lock receptacles. Located on cord for reel in [#LOC]. | 1644 |
| 5130-0018 | Junction box Daniel Woodhead with four (4) NEMA L5-20 110 volt 20 amp twist lock receptacles. Located on cord for reel in [#LOC]. | 1315 |
| 5130-0022 | Rollers for cord reel mounted through panel. Location(s): [#LOC]. | 392 |
| 5130-0024 | Electric cord reel rewind switch. Switch located [#LOC]. | 131 |
| 5130-0026 | Cord connector. Fire Power 3 wire 20A/110V female located on cord for reel in [#LOC]. | 663 |
| 5130-0027 | Cord connector. Duraline 4 wire 20A/220V female located on cord for reel in [#LOC]. | 174 |
| 5130-0028 | Rollers captive for cord reel mounted on reel. | 392 |
| 5130-0030 | Junction box Circle-D with one (1) straight blade and three (3) twist lock receptacles. Located on cord for reel in [#LOC]. | 1045 |
| 5130-0031 | Cord reel electric/manual back-up with 200' of 10/3 black cable. Crank handle mounted next to reel. Locate [#LOC] | 2883 |
| 5130-0032 | Cord reel electric with 150' of 10/4 yellow cable. Location [#LOC] | 3505 |
| 5130-0033 | Junction box Circle D with four (4) 3-wire NEMA 5-15 110 volt 15 amp straight blade receptacles. Located on cord for reel in [#LOC]. | 827 |
| 5130-0034 | Cord reel Akron electric with 200' of 10/3 yellow cable. Location(s): [#LOC]. | 2587 |
| 5130-0035 | Junction box Circle-D with (3) L5-15 and (1) L5-20 110Volt twist lock receptacles. Located on cord for reel in [#LOC]. | 827 |

| Item No. | Description | |
|---|---|---|
| 5130-0036 | Diamond plate cord reel cover over reel. Use rollers provided with reel on cover IPO E-One supplied if applicable. Location: [#LOC] | 685 |
| 5130-0037 | Cord reel Akron electric with 200' of 10/4 yellow cable. Location(s): [#LOC] | 3385 |
| 5130-0038 | Junction box Circle-D with (2) L5-20 twist lock and (2) 5-20 110Volt straight blade duplex receptacles. Located on cord for reel in [#LOC]. | 827 |
| 5130-0039 | Bracket for rollers. A support bracket for rollers shall be provided up high at compt opening for reel in [#LOC]. | 297 |
| 5130-0040 | Hannay PWM (Pulse Width Modulator) control for reel. Mounted next to switch for cord reel in [#LOC]. | 737 |
| 5130-0041 | Cord reel rollers bracket mounted on top of [#LOC]. | 392 |
| 5130-0042 | Junction box Circle-D with four (4) 3-wire Nema 5-20 110Volt 20 Amp duplex receptacles. Located on cord for reel in [#LOC]. | 917 |
| 5130-0044 | Junction box Akron with (2) 5-20 125v 20 Amp duplex recepts and (2) L5-20 125v 20 Amp twist lock recepts. Located on cord for reel in [#LOC]. | 652 |
| 5130-0045 | Akron model EJB-VMT-TP mounting box. Locate box for use with reel in or on [#LOC]. | 318 |
| 5130-0046 | Junction box Circle-D with one (1) 5-20 straight blade and three (3) L5-20 twist lock receptacles. Box wired as 240v with individual circuit breakers on box. Located on cord for reel in [#LOC]. | 1045 |
| 5130-0048 | Junction box Circle-D with (2) NEMA 5-20 120V GFCI duplex and (2) NEMA L6-20 220V twist lock receptacles. Located on cord for reel in [#LOC]. | 1045 |
| 5130-0049 | Cord reel electric for 200' of 10/3 cable. Cable not included. Location(s): [#LOC] | 2424 |
| 5130-0054 | Cord reel electric with 200' of 8/3 black cable. Locate [#LOC] | 4112 |
| 5130-0055 | Rollers for cord reel mounted on support bracket. Location(s): [#LOC] | 392 |
| 5130-0056 | Junction box Woodhead with (3) NEMA L5-15 110 Volt 15 Amp twist lock receptacles and (1) NEMA 5-20 110 Volt 20 Amp household receptacle. Located on cord for reel in [#LOC]. | 1644 |
| 5130-0057 | Mounting box for Woodhead junction box. Mount at final or ship loose (customer preference). For use with reel located in or on [#LOC]. | 297 |
| 5130-0058 | Junction box Akron with four (4) 3-wire NEMA L5-20 110 volt 20 amp twist lock receptacles. Located [#LOC]. | 652 |
| 5130-0059 | Junction box Circle-D with four (4) FirePower FP11 110Volt 20 Amp receptacles. Located on cord for reel in [#LOC]. | 1348 |
| 5130-0061 | Cord reel electric with 250' of 10/3 black cable. Locate [#LOC]. | 2832 |
| 5130-0062 | Junction box Circle-D with (2) 5-20 straight blade and (2) twist lock receptacles; (1) L5-20 and (1) L5-15. Located on cord for reel in [#LOC]. | 1045 |
| 5130-0063 | Cord reel electric with 200' of 12/3 black cable. Locate [#LOC]. | 2832 |
| 5130-0067 | Junction box Akron with (4) 5-20-GFCI 125v 20 Amp duplex recepts. Includes 12" pigtail with L14-20 connector and rubber feet. Located on cord for reel in [#LOC]. | 652 |
| 5130-0068 | Cord reel electric with 200' of 10/3 yellow cable. Location(s): [#LOC]. | 2710 |
| 5130-0069 | Cord reel electric with 250' of 10/3 yellow cable. Locate [#LOC]. | 3219 |
| 5130-0070 | Cord connector. Hubbell 4 wire NEMA L14-20 twist lock female located on cord for reel in [#LOC] | 128 |
| 5130-0073 | Cord reel electric low profile with 200' of 10/3 yellow cable. Location(s): [#LOC]. | 3435 |
| 5130-0074 | Cord connector. Daniel Woodhead 3 wire NEMA 5-20 straight blade female located on cord for reel in [#LOC]. | 91 |
| 5130-0079 | Cord reel electric with 150' of 10/3 yellow cable. Location(s): [#LOC]. | 2487 |
| 5130-0080 | Junction box Circle-D with four (4) 3-wire NEMA L5-20 110 volt 20 amp GFCI twist lock receptacles. Located on cord for reel in [#LOC]. | 1045 |
| 5130-0081 | Cord reel electric model ECR 1620-17-18 with 200' of 10/4 yellow cable. Location [#LOC]. | 3505 |
| 5130-0082 | Cord connector. Daniel Woodhead 3 wire NEMA L5-30 twist lock female located on cord for reel in [#LOC]. | 180 |
| 5130-0083 | Slideout roller assembly for reel located in [#LOC]. | 1089 |
| 5130-0084 | Junction box Circle-D with one (1) 15 amp straight blade and three (3) 15 amp twist lock receptacles. Located on cord for reel in [#LOC]. | 1045 |
| 5130-0087 | Cord connector. Daniel Woodhead 4 wire NEMA L14-30 twist lock female located on cord for reel in [#LOC]. | 180 |
| 5130-0088 | Junction box Woodhead with two (2) NEMA L5-20 110V 20A twist lock and two (2) NEMA 5-20 110V 20A duplex receptacles. Located on cord for reel in [#LOC]. | 1493 |
| 5130-0090 | Junction box Akron with (4) 5-15 120v 15 Amp duplex recepts. Located on cord for reel in [#LOC]. | 652 |
| 5130-0093 | Cord reel electric. Chrome / stainless with 200' of 10/3 yellow cable. Location(s): [#LOC]. | 2892 |
| 5130-0094 | Cord reel electric with 200' of 10/3 black cable model ELFCR1622-14-16. Locate [#LOC]. | 2400 |
| 5130-0101 | Cord reel electric with 150' of 10/4 yellow cable. Reel to include strap (Comet) brake to provide drag pressure to reel axle. Location [#LOC] | 3592 |
| 5130-0102 | Junction box Circle-D with four (4) 3-wire 120Volt 20 Amp Hubbel model HBL7310B twist lock receptacles. Located on cord for reel in [#LOC]. | 1045 |
| 5130-0103 | Junction box Circle-D with four (4) 3-wire NEMA L5-20 110 volt 20 amp GFCI twist lock receptacles with 220V feed. Located on cord for reel in [#LOC]. | 1045 |
| 5130-0104 | Cord reel electric with 150' of 10/4 black cable. Location: [#LOC]. | 2210 |
| 5130-0105 | Cord reel electric CMW 6020 with 200' of 10/3 yellow cord. Location: [#LOC]. | 6558 |

| Item No. | Description | |
|---|---|---|
| 5130-0107 | Cord reel electric with 200' of 12/3 yellow cable. Locate [#LOC]. | 2909 |
| 5130-0108 | Cord reel electric with 150' of 10/4 yellow cable. Reel has 3 conductor cover IPO 4 (for narrower reel). Location: [#LOC]. | 3505 |
| 5130-0109 | Junction box Circle D with four (4) 3-wire 20 amp receptacles two (2) twist lock NEMA L 5-20 and two (2) straight blade NEMA 5-20 receptacles. Located on cord for reel in [#LOC]. | 891 |
| 5130-0111 | Stirrup style cord reel rewind switch. Location: [#LOC]. | 206 |
| 5130-0112 | Junction box Akron with (3) NEMA L5-20 GFCI twistlock and (1) NEMA L6-20 220V twist lock receptacle. Located on cord for reel in [#LOC]. | 763 |
| 5130-0114 | Rollers hydraulic/air reel rollers mounted through panel. Location(s): [#LOC]. | 392 |
| 5130-0115 | Junction box Akron with (2) NEMA L5-15 GFCI twistlock and (2) NEMA L14-20 120V/240V twist lock receptacle. Located on cord for reel in [#LOC]. | 763 |
| 5130-0116 | Optional Comet (friction) brake for Hannay cord reel (EA). | 82 |
| 5130-0120 | Cord reel electric painted black from manufacturer with 200' of 10/3 black cable. Locate [#LOC]. | 2400 |
| 5130-0121 | Junction box Akron with four (4) 3-wire NEMA L5-15 110 volt 15 amp twist lock receptacles. Located [#LOC]. | 652 |
| 5130-0122 | Cord connector. Hubbell 3 wire NEMA L5-15 twist lock female with yellow seal-tite cover located on cord for reel in [#LOC]. | 149 |
| 5130-0123 | Smooth plate cord reel cover with black Durabak finish over reel. Use rollers provided with reel on cover IPO E-One supplied if applicable. Location: [#LOC] | 822 |
| 5130-0124 | Junction box Circle-D with (3) L5-20 twist lock and (1) 5-20 110V straight blade duplex receptacles. Located on cord for reel in [#LOC]. | 827 |
| 5130-0125 | Cord reel Hannay electric low profile with 200' of 10/3 black cable. Locate [#LOC]. | 3098 |
| 5130-0126 | Junction box Circle-D with (1) L5-20 twist lock and (3) 5-15 110Volt straight blade duplex receptacles. Located on cord for reel in [#LOC]. | 827 |
| 5130-0127 | Cord reel electric with 175' of 10/3 yellow cable. Location [#LOC]. | 3505 |
| 5130-0131 | Cord reel electric Hannay model 1614-17-18 with 150' of 10/3 black cable. Location(s): [#LOC]. | 2190 |
| 5130-0132 | Cord reel electric Hannay model 1614-17-18 with 150' of 10/3 yellow cable. Location(s): [#LOC]. | 2281 |
| 5130-0133 | Cord reel electric Hannay model 1615-17-18 with 150' of 10/3 black cable. Location(s): [#LOC]. | 2381 |
| 5130-0137 | Cord reel electric low profile with 200' of 10/3 black cable; Hannay model ELFCR1636-10-11-6. Locate [#LOC]. | 2559 |
| 5130-0139 | Junction box Circle-D with two (2) 15 amp twist lock receptacles and two (2) 20 amp twist lock receptacles. Located on cord for reel in [#LOC]. | 1045 |
| 5130-0140 | Cord reel electric low profile with 200' of 10/3 yellow cable; Hannay model ELFCR1636-10-11-6. Locate [#LOC]. | 2880 |
| 5130-0141 | Junction box Circle-D with two (2) 15 amp straight blade and two (2) 15 amp twist lock receptacles. Located on cord for reel in [#LOC]. | 1045 |
| 5130-0142 | Air reel rewind switch. Switch located [#LOC]. | 131 |
| 5130-0143 | Junction box Woodhead with (1) NEMA 5-15 110V GFCI duplex receptacle (2) NEMA L5-20 110V GFCI twist lock receptacles and (1) NEMA L6-20 220V twist lock receptacle. Located on cord for reel in [#LOC]. | 1854 |
| 5130-0146 | Junction box Circle-D with two (2) 15 amp duplex receptacles and two (2) 20 amp duplex receptacles. Located on cord for reel in [#LOC]. | 1045 |
| 5130-0150 | Junction box Woodhead with (2) NEMA L5-20 110 Volt 20 Amp twist lock receptacles and (2) NEMA 5-20 110 Volt 20 Amp household receptacle. Located on cord for reel in [#LOC]. | 1644 |
| 5130-0151 | Cord reel low profile electric with 200' of 10/4 yellow cable. Location: [#LOC]. | 3694 |
| 5150-0003 | Weldon auxiliary turn signal model 9186-8560 (PR). Location: [#LOC] | 232 |
| 5150-0007 | Whelen 600 series LED vertical mount tail lights. Includes LED stop/tail arrow turn and halogen back-up lights with vertical Cast 3 housing and weatherproof connectors. | 1469 |
| 5150-0008 | Whelen 600 series LED vertical mount tail lights. Includes LED stop/tail arrow turn and halogen back-up lights with vertical Cast 4 housing and weatherproof connectors. | 1797 |
| 5150-0010 | Whelen 600 series LED horizontal mount tail lights. Includes LED stop/tail turn and halogen back-up lights. Available on G067 L193 and Q100/114 only. With weatherproof connectors. | 1615 |
| 5150-0011 | Whelen 600 series LED vertical mount tail lights. Includes LED stop tail turn and halogen back-up lights with vertical Cast 3 housing and weatherproof connectors. | 1582 |
| 5150-0012 | Whelen 600 series LED vertical mount tail lights. Includes LED stop/tail turn and halogen back-up lights with vertical Cast 4 housing and weatherproof connectors. | 1686 |
| 5150-0015 | Whelen 600 series vertical mount taillights. Includes incandescent stop/tail arrow turn and halogen backup lights with vertical Cast 4 housing and weatherproof connectors. | 818 |
| 5150-0017 | License plate light LED with chrome housing located at the rear of the body. | 153 |
| 5150-0018 | Marker lights additional amber LED Trucklite Model 21 (PR). Location: [#LOC] | 196 |
| 5150-0019 | Marker lights addtional red LED Trucklite Model 21 (PR). Location: [#LOC] | 196 |
| 5150-0020 | Weldon model 1010 LED / incandescent tail lights. Includes red LED stop/tail/turn and clear incandescent back-up. | 424 |
| 5150-0022 | Marker light LED body package. Commercial pumper bodies only. | 896 |
| 5150-0023 | Weldon Model 1010 LED / incandescent tail lights. Includes red LED stop/tail amber LED turn and clear incandescent back-up. | 616 |

| Item No. | Description | |
|---|---|---|
| 5150-0025 | Marker light LED body/cab package. E-One custom cab and pumper or tanker body only. | 1503 |
| 5150-0032 | Bracket license plate at rear of body. | 45 |
| 5150-0036 | Truck-Lite LED tail lights. Includes 4" red LED stop/tail amber LED turn and clear LED back-up. | 948 |
| 5150-0037 | Zico backing light (PR) with white pained housing model #ZQL-RV-H7614. Location: [#LOC]. | 445 |
| 5150-0039 | Marker lights Britax amber/red rubber housed mounted on the rear body corners angled down. | 334 |
| 5150-0042 | Federal Signal LED tail lights. Includes 4" diameter red LED stop/tail amber turn and LED clear back-up. | 645 |
| 5150-0050 | Zico backing lights (PR) with polished stainless steel housing model ZQL-SS-H7614. Location: [#LOC]. | 687 |
| 5150-0052 | Code 3 65STK4 vertical mount tail lights. Includes red LED stop/tail amber LED turn and white LED back-up lights. | 2289 |
| 5150-0053 | Code 3 65PKG vertical mount tail lights. Includes red LED stop/tail amber arrow LED turn and white LED back-up lights. | 1864 |
| 5150-0056 | Whelen 600 series LED vertical mount tail lights. Includes LED stop/tail arrow turn and back-up lights with vertical Cast 3 housing and weatherproof connectors. | 2345 |
| 5150-0057 | Whelen 600 series LED vertical mount tail lights. Includes LED stop/tail arrow turn and back-up lights with vertical Cast 4 housing and weatherproof connectors. | 2672 |
| 5150-0058 | Federal Signal QuadraFlare LED vertical mount tail lights. Includes LED stop/tail arrow turn and back-up lights with vertical Cast 4 housing and weatherproof connectors. | 1466 |
| 5150-0059 | Federal Signal QuadraFlare LED vertical mount tail lights. Includes LED stop/tail arrow turn and back-up lights with vertical Cast 3 housing and weatherproof connectors. | 1280 |
| 5150-0060 | Federal Signal QuadraFlare LED vertical mount tail lights. Includes LED stop/tail turn and back-up lights with vertical Cast 3 housing and weatherproof connectors. | 1400 |
| 5150-0063 | Double chrome trim ring for Weldon 1010 tail lights (PR). | 310 |
| 5150-0064 | Whelen PSR00XRR series LED red third brake light. Light mounted above recessed traffic advisor. | 374 |
| 5150-0066 | Marker light LED body/cab package. E-One custom cab and pumper or tanker body only. Model 10 front marker lights mounted on top of cab. | 1771 |
| 5150-0068 | Marker lights Britax LED amber/red rubber housed mounted on the rear body corners angled down. | 456 |
| 5150-0069 | Federal Signal QuadraFlare LED vertical mount taillights. Includes LED stop/tail arrow turn and backup lights with weatherproof connectors. | 1490 |
| 5150-0071 | Light Whelen model PSR00XRR LED (EA) red 3rd brake light. Location: [#LOC]. | 221 |
| 5150-0072 | Marker light LED body/cab package. E-One custom cab and pumper or tanker body only. Includes: Trucklite Model 10 front marker lights mounted on top of cab Trucklite rear upper body and Whelen lower cab/body marker lights. | 2298 |
| 5150-0073 | Marker lights additional red LED Whelen Model 50R00MRR (PR). Location: [#LOC] | 284 |
| 5150-0074 | Marker lights additional amber LED Whelen Model 50A00MAR (PR). Location: [#LOC] | 284 |
| 5150-0075 | Whelen 600 series LED vertical mount taillights. Includes LED stop/tail arrow turn and backup lights with individual chrome flanges and weatherproof connectors. | 3168 |
| 5150-0076 | Whelen 700 LED auxiliary chevron turn signal (PR) with 15 degree castings. Location: [#LOC] | 828 |
| 5150-0077 | Whelen 900 series LED tail lights. Includes LED stop/tail arrow turn and back-up lights with weatherproof connectors. | 5713 |
| 5150-0078 | Truck-Lite model #35720 guards for front LED clearance lights on cab. | 105 |
| 5150-0079 | Spring mounted plate for rear DOT lighting. Locate centered below rear of body. | 417 |
| 5150-0080 | Weldon auxiliary turn signal model 9186-8580 LED (PR). Location: [#LOC]. | 316 |
| 5150-0081 | Light Whelen 500 model 5SR00XRR red LED 3rd brake light (ea). Location: [#LOC]. | 248 |
| 5150-0082 | Whelen 600 series LED vertical mount taillights. Includes LED stop/tail arrow turn in vertical Cast 3 housing with 900 series halogen backup lights down low and weatherproof connectors. | 1952 |
| 5150-0091 | Whelen M6 series LED vertical mount tail lights. Includes LED stop/tail arrow turn and back-up lights with vertical 4 light housing and weatherproof connectors. | 1860 |
| 5150-0093 | Marker light LED body/cab package. E-One custom cab and stainless steel body only. | 1503 |
| 5150-0098 | Truck-Lite auxiliary turn signal model 60117Y LED (PR) with model 60719 stainless steel cover. Location: [#LOC]. | 302 |
| 5150-0099 | LED marker light cab and body package. E-ONE custom cab and SS body vehicles. | 1503 |
| 5150-0101 | Whelen M9 series LED taillights. Includes LED stop/tail arrow turn and backup lights with weatherproof connectors. | 3902 |
| 5150-0120 | Whelen 600 LED auxiliary arrow turn signal (PR) with 15 degree castings. Location: [#LOC]. | 755 |
| 5150-0121 | Trucklite model MDL60 chrome bezels for front cab corner marker/turn lights. | 62 |
| 5150-0122 | Marker lights addtional red LED Trucklite Model 15 (PR). Location: [#LOC]. | 117 |
| 5150-0123 | Marker lights addtional amber LED Trucklite Model 15 (PR). Location: [#LOC]. | 117 |
| 5150-0126 | Marker light LED cab package. E-One custom cab only. | 862 |
| 5150-0127 | Whelen M6 series LED vertical mount tail lights. Includes LED stop/tail arrow turn lights with vertical 3 light housing (PR) with M9LZC Super LED scene lights (PR) with chrome flanges and weatherproof connectors. | 2916 |
| 5150-0130 | License plate light LED with chrome housing located at the rear of the body driver side down low. | 153 |
| 5150-0133 | License plate light LED with chrome housing located at the rear of the body below B1 entry door. | 153 |

| Item No. | Description | |
|---|---|---|
| 5150-0134 | License plate light incandescent with chrome housing located at the rear of the body. | 153 |
| 5150-0145 | Marker light LED body/cab package. E-One custom cab and SS pumper body. | 1503 |
| 5150-0146 | Taillights Federal Signal DOT STT/BU. Includes 4" LED red stop/tail/turn and 4" LED clear back-up lights. | 316 |
| 5150-0147 | Whelen 600 series LED vertical mount tail lights. Includes LED stop/tail arrow turn and halogen back-up lights with individual chrome flanges and weatherproof connectors. | 2293 |
| 5150-0148 | Bracket license plate at rear of body. Fabricated from .125" smooth plate aluminum painted job color. | 55 |
| 5150-0149 | License plate light incandescent with chrome housing located at the rear of the body below tailboard/body. | 63 |
| 5150-0150 | Weldon LED vertical mount tail lights. Includes LED stop taill turn and halogen back-up lights with vertical 4 housing and weatherproof connectors. | 2153 |
| 5150-0152 | Federal Signal QuadraFlare LED vertical mount tail lights. Includes LED stop/tail arrow turn and back-up lights with individual chrome bezels and weatherproof connectors. | 1216 |
| 5150-0154 | License plate light EON LED located at the rear of the body. | 128 |
| 5150-0155 | Whelen 600 series LED vertical mount taillights. Includes LED stop/tail arrow turn and backup lights with individual black flanges and weatherproof connectors. | 2563 |
| 5150-0156 | Marker lights Britax model L428 LED amber/red rubber housed (PR). Location: [#LOC]. | 456 |
| 5150-0158 | Whelen M6 series LED vertical mount tail lights with clear lenses. Includes LED stop/tail arrow turn and back-up lights with vertical 4 light housing and weatherproof connectors. | 1860 |
| 5150-0159 | License plate light EON LED located on front bumper. | 128 |
| 5150-0160 | Marker lights Britax LED amber/red rubber housed mounted on the rear body corners angled up. | 456 |
| 5150-0161 | Weldon auxiliary turn signal and marker light model 9186-8580 LED (PR). Location: [#LOC]. | 316 |
| 5150-0162 | Weldon LED vertical mount tail lights. Includes LED stop taill turn and back-up lights with vertical 4 housing and weatherproof connectors. | 2616 |
| 5150-0166 | Light Whelen M6 red LED 3rd brake light (ea). Location: [#LOC] | 311 |
| 5150-0167 | Weldon clearance light model 9186-8580 LED (PR). Low intensity only wired as steady on with marker light circuit. Location: (1) each side in body wheel well offset forward. | 316 |
| 5150-0169 | License plate light LED with black housing located at the rear of the body. | 153 |
| 5150-0170 | Optronics 4" GloLight LED taillights. Includes red LED stop/tail amber turn and clear back-up. | 597 |
| 5200-0000 | Breaker box 8 place single phase. Includes main breaker. Note: Main breaker occupies 2 places leaving 6 available. Locate [#LOC]. | 962 |
| 5200-0001 | Breaker box 12 place single phase. Includes main breaker. Note: If gen is 6KW or less main will occupy 2 places leaving 10 available. Locate [#LOC]. | 1005 |
| 5200-0002 | Breaker Box 20 Place Single Phase. Includes main breaker. Locate [#LOC]. | 1024 |
| 5200-0003 | Breaker box 2 place single phase (70A 110/220V). Location [#LOC]. | 428 |
| 5200-0007 | Breaker box 30 place single phase. Includes main breaker. Maximum generator size 48 KW. Location: [#LOC]. | 1586 |
| 5200-0008 | Breaker box 16 place single phase. Includes main breaker. Locate [#LOC]. | 1009 |
| 5200-0009 | Breaker box 8 place single phase; no main breaker. For use with multiple options wired through shoreline power with 30A or larger inlet recept. Locate adjacent to main breaker box. | 750 |
| 5250-0003 | Generator Onan 6KW diesel. Requires fuel pick up option in chassis and 3rd party testing. Generator location: [#LOC]. | 17220 |
| 5250-0004 | Generator Onan 10KW diesel. Requires fuel pick up option in chassis and 3rd party testing. Generator location: [#LOC]. | 21984 |
| 5250-0005 | Generator Onan 6KW hydraulic. Includes generator control / PTO engage switch and a gauge panel located adjacent to breaker box. Generator location: [#LOC]. | 14728 |
| 5250-0006 | Generator Onan 8KW hydraulic. Includes generator control/PTO engage switch and a gauge panel located adjacent to circuit breaker box. Generator location: [#LOC]. | 16576 |
| 5250-0007 | Generator Onan 10KW hydraulic. Includes generator control / PTO engage switch and a gauge panel located adjacent to breaker box. Generator location: [#LOC]. | 17213 |
| 5250-0008 | Generator Harrison 15KW MPC hydraulic. Includes generator control / PTO engage switch and a gauge panel located adjacent to breaker box. Generator location: [#LOC]. | 28535 |
| 5250-0009 | Generator Harrison 20KW MPC hydraulic. Includes generator control / PTO engage switch and a gauge panel located adjacent to breaker box. Generator location: [#LOC]. | 30829 |
| 5250-0012 | Generator Onan 15KW hydraulic. Includes generator control/PTO engage switch and a gauge panel located adjacent to circuit breaker box. Note: Generator is not compatible with an Amkus electric hyd tool power unit. Generator location: [#LOC]. | 24860 |
| 5250-0017 | Generator Honda EM5000SXK with 4.5KW continuous output. Generator location: [#LOC]. | 6972 |
| 5250-0026 | Generator Smart Power 10KW hydraulic model ER110. Includes generator control / PTO engage switch and a gauge panel located adjacent to breaker box. Generator location: [#LOC]. | 19635 |
| 5250-0036 | Generator Smart Power 6KW hydraulic model HR-6 (with top mount cooler). Includes generator control / PTO engage switch and a gauge panel located adjacent to breaker box. Generator location: [#LOC]. | 15638 |

| Item No. | Description | |
|---|---|---|
| 5250-0037 | Generator Smart Power 8KW hydraulic model HR-8 (with top mount cooler). Includes generator control/PTO engagement switch and a gauge panel located adjacent to the circuit breaker box. Generator location: [#LOC]. | 17870 |
| 5250-0038 | Generator Smart Power 10KW hydraulic model HR-110 (with top mount cooler). Includes generator control / PTO engage switch and a gauge panel located adjacent to breaker box. Generator location: [#LOC]. | 19635 |
| 5250-0039 | Generator Harrison 10KW MCR hydraulic. Includes generator control / PTO engage switch and a gauge panel located adjacent to breaker box. Generator location: [#LOC]. | 18579 |
| 5250-0040 | Generator Harrison 6KW MCR hydraulic. Includes generator control / PTO engage switch and a gauge panel located adjacent to breaker box. Generator location: [#LOC]. | 14471 |
| 5250-0042 | Generator Westerbeke 5KW diesel (model#5.0 BCDB). Requires fuel pick up option in chassis and 3rd party testing. Generator location: [#LOC]. | 17806 |
| 5250-0043 | Dealer installed generator. Option includes space only. Dealer responsible for NFPA required 3rd party generator testing. | 340 |
| 5250-0045 | Generator Harrison 30KW MPC hydraulic. Includes generator control / PTO engage switch and a gauge panel located adjacent to breaker box. Generator location: [#LOC]. | 37785 |
| 5250-0047 | Generator Smart Power 15KW hydraulic model HR-15 (with top mount cooler). Includes generator control / PTO engage switch and a gauge panel located adjacent to breaker box. Generator location: [#LOC]. | 26119 |
| 5250-0050 | Generator Smart Power 20KW hydraulic model HR-20 (with top mount cooler). Includes generator control / PTO engage switch and a gauge panel located adjacent to breaker box. Generator location: [#LOC]. | 28716 |
| 5250-0051 | Locate generator gauge panel on pump operators panel ipo next to breaker box. | 138 |
| 5250-0054 | Generator Onan 7.5KW diesel. Requires fuel pick up option in chassis and 3rd party testing. Generator location: [#LOC]. | 15433 |
| 5250-0055 | Generator Smart Power 8KW hydraulic model ER8. Includes generator control / PTO engage switch and a gauge panel located adjacent to breaker box. Generator location: [#LOC] | 21160 |
| 5250-0056 | PTO engage switch to be wired as follows: switch in the down position (PTO off) and switch in the up position (PTO engage). | 131 |
| 5250-0060 | Dealer installed Onan 6KW diesel generator located [#LOC]. Option includes space only. Dealer responsible for NFPA required 3rd party generator testing. | 340 |
| 5250-0061 | Dealer installed Onan 6KW hydraulic generator located [#LOC]. Option includes space only. Dealer responsible for NFPA required 3rd party generator testing. | 340 |
| 5250-0062 | Dealer installed Onan 8KW hydraulic generator located [#LOC]. Option includes space only. Dealer responsible for NFPA required 3rd party generator testing. | 340 |
| 5250-0063 | Dealer installed Onan 10KW hydraulic generator located [#LOC]. Option includes space only. Dealer responsible for NFPA required 3rd party generator testing. | 340 |
| 5250-0064 | Dealer installed Onan 15KW hydraulic generator located [#LOC]. Option includes space only. Dealer responsible for NFPA required 3rd party generator testing. | 340 |
| 5250-0065 | Dealer installed Onan 20KW hydraulic generator located [#LOC]. Option includes space only. Dealer responsible for NFPA required 3rd party generator testing. | 340 |
| 5250-0066 | Dealer installed Smart Power 10KW hydraulic model ER110 generator located [#LOC]. Option includes space only. Dealer responsible for NFPA required 3rd party generator testing. | 340 |
| 5250-0067 | Dealer installed Smart Power 10KW hydraulic model HR110 generator located [#LOC]. Option includes space only. Dealer responsible for NFPA required 3rd party generator testing. | 340 |
| 5250-0068 | Dealer installed Smart Power 6KW hydraulic model HR-6 (with top mount cooler) generator located [#LOC]. Option includes space only. Dealer responsible for NFPA required 3rd party generator testing. | 340 |
| 5250-0069 | Dealer installed Smart Power 8KW hydraulic model HR-8 (with top mount cooler) generator located [#LOC]. Option includes space only. Dealer responsible for NFPA required 3rd party generator testing. | 340 |
| 5250-0070 | Dealer installed Smart Power 15KW hydraulic model HR-15 (with top mount cooler) generator located [#LOC]. Option includes space only. Dealer responsible for NFPA required 3rd party generator testing. | 340 |
| 5250-0071 | Dealer installed Smart Power 20KW hydraulic model HR-20 (with top mount cooler) generator located [#LOC]. Option includes space only. Dealer responsible for NFPA required 3rd party generator testing. | 340 |
| 5250-0072 | Dealer installed Harrison 6KW MCR hydraulic generator located [#LOC]. Option includes space only. Dealer responsible for NFPA required 3rd party generator testing. | 340 |
| 5250-0073 | Dealer installed Harrison 10KW MCR hydraulic generator located [#LOC]. Option includes space only. Dealer responsible for NFPA required 3rd party generator testing. | 340 |
| 5250-0074 | Dealer installed Harrison 30KW MPC hydraulic generator located [#LOC]. Option includes space only. Dealer responsible for NFPA required 3rd party generator testing. | 340 |
| 5250-0075 | Guarded generator PTO engage toggle switch. Located driver side cab switch panel. For use on Typhoon X and CIIX cabs only. | 223 |

| Item No. | Description | |
|---|---|---|
| 5250-0076 | Guarded PTO engage rocker switch. Located driver side cab switch panel. For use on Quest CIIX LTH aerial and commercial cabs. | 223 |
| 5250-0077 | Generator Harrison 8KW MCR hydraulic. Includes generator control / PTO engage switch and a gauge panel located adjacent to breaker box. Generator location: [#LOC]. | 18376 |
| 5250-0078 | Generator Smart Power 10KW hydraulic Liberator model Li15 (with top mount cooler and XRT hyd tool pump). Includes generator control / PTO engage switch and a gauge panel located adjacent to breaker box. Generator location: [#LOC]. | 30347 |
| 5250-0080 | Dealer installed 5KW gas generator located [#LOC]. Option includes space only. Dealer responsible for NFPA required 3rd party generator testing. | 340 |
| 5250-0082 | Dealer installed Westerbeke 10KW diesel generator located [#LOC]. Option includes space only. Dealer responsible for NFPA required 3rd party generator testing. | 340 |
| 5250-0092 | Generator Honda EM5000SXK with 4.5KW continuous output. NFPA rated at 3.3KW. Generator location: [#LOC]. | 6317 |
| 5250-0094 | Harrison gas powered 5.5KW generator. Includes alternator duct and attached fuel tank. Locate in compartment [#LOC]. | 4793 |
| 5250-0106 | Westerbeke 10KW BTDAR diesel single phase generator and XRT Hydraulic tool system with 3 tool capability. 10500 PSI system. Includes selector valve for each reel hyd res / filter and remote cooler. Requires fuel pick up option in chassis and 3rd party testing. Locate in dunnage pan offset to officer side. Route (4) lead lines to B1 compt. | 52759 |
| 5250-0111 | Westerbeke 10KW BTDAR diesel single phase generator and XRT Hydraulic tool system with 2 tool capability. 10500 PSI system. Includes selector valve for each reel hyd res / filter. Requires fuel pick up option in chassis and 3rd party testing. Locate in [#LOC]. Route (4) lead lines to B1 compt. | 52759 |
| 5250-0115 | Generator Harrison 15KW MPC hydraulic w/IHT. Includes tool circuit manifold aux heat exchanger generator control / PTO engage switch and a gauge panel located adjacent to breaker box. [#LOC] | 38299 |
| 5250-0116 | Dealer installed Powertech 8KW diesel generator located [#LOC]. Option includes space only. Dealer responsible for NFPA required 3rd party generator testing. | 340 |
| 5250-0117 | Generator Harrison 8KW MAS hydraulic. Includes generator control/PTO engage switch and a gauge panel located adjacent to breaker box. Generator location: [#LOC]. | 18376 |
| 5250-0118 | Generator Harrison 8KW LPG hydraulic. Includes generator control switch to engage the PTO and start the generator and a gauge panel located adjacent to breaker box. Generator location: [#LOC]. | 18033 |
| 5250-0123 | Generator Honda EM4000 with 3.5KW continuous output. NFPA rated at 3.3KW. Generator location: [#LOC]. | 6317 |
| 5250-0124 | Generator Smart Power 6KW hydraulic model LR-6 Light Rescue Series (FORD 250 350 450 550 Chassis). Includes generator control / PTO engage switch and a gauge panel located adjacent to breaker box. Generator location:[#LOC]. | 16544 |
| 5250-0125 | Generator Harrison 10KW LPG hydraulic. Includes generator control/PTO engage switch and a gauge panel located adjacent to breaker box. Generator location: [#LOC]. | 18579 |
| 5250-0128 | Generator Smart Power 15KW hydraulic Liberator model Li20 (with top mount cooler and XRT hyd tool pump). Includes generator control switch and a gauge panel located adjacent to breaker box. Generator location: [#LOC]. | 35419 |
| 5250-0129 | Generator Harrison 8KW MDS hydraulic. Includes generator control/PTO engage switch gauge panel located adjacent to breaker box and 80cc hyd pump (requires driver side port on EVS3000 trans). Generator location: [#LOC]. | 22940 |
| 5250-0130 | Generator Harrison 6KW MDS hydraulic w/IHT for continuous accessory. Includes aux hyd system manifold integral aux heat exchanger generator control / PTO switch aux system / PTO switch (both switches accessible by driver) and a generator gauge panel located adjacent to breaker box. Generator location: [#LOC]. | 28851 |
| 5250-0131 | Generator toggle switch (IPOS keyed switch). Located: [#LOC]. | 223 |
| 5250-0132 | Generator Harrison 8KW MDS hydraulic w/IHT for continuous accessory. Includes aux hyd system manifold integral aux heat exchanger generator control / PTO switch aux system / PTO switch (both switches accessible by driver) and a generator gauge panel located adjacent to breaker box. Generator location: [#LOC]. | 31037 |
| 5250-0134 | Generator Harrison 6KW LPG hydraulic with remote mounted reservoir. Includes generator control / PTO engage switch and a gauge panel located adjacent to breaker box. Generator location: [#LOC]. | 18983 |
| 5250-0135 | Generator Harrison 10KW MCR hydraulic w/IHT for continuous accessory. Includes aux hyd system manifold aux heat exchanger generator control / PTO switch aux system / PTO switch (both switches accessible by driver) and a generator gauge panel located adjacent to breaker box. Generator location: [#LOC]. | 29188 |
| 5250-0137 | Generator Harrison 10KW LPG hydraulic with remote reservoir. Includes generator control/PTO engage switch and a gauge panel located adjacent to breaker box. Generator location: [#LOC]. | 18579 |
| 5250-0138 | Generator Smart Power 20KW hydraulic Liberator model Li25 (with top mount cooler and XRT hyd tool pump). Includes generator control switch guarded PTO switch and a gauge panel located adjacent to breaker box. Generator location: [#LOC]. | 43218 |

| Item No. | Description | |
|---|---|---|
| 5250-0139 | Dealer installed Westerbeke 8W diesel generator located dunnage pan offset to officer side. Option includes space only. Dealer responsible for NFPA required 3rd party generator testing. | 340 |
| 5250-0141 | Generator Smart Power 6KW hydraulic model ER6. Includes generator control / PTO engage switch and a gauge panel located adjacent to breaker box. Generator location: [#LOC]. | 15638 |
| 5250-0142 | Generator Harrison 6KW LPG hydraulic. Includes generator control / PTO engage switch and a gauge panel located adjacent to breaker box. Generator location: [#LOC]. | 15568 |
| 5250-0143 | Generator Onan 8KW hydraulic 50 Hz. Includes generator control/PTO engage switch and a gauge panel located adjacent to circuit breaker box. Generator location: [#LOC]. | 17213 |
| 5250-0144 | Generator Harrison 12KW MCR hydraulic. Includes generator control / PTO engage switch and a gauge panel located adjacent to breaker box. Generator location: [#LOC]. | 19579 |
| 5250-0145 | Generator Harrison 6KW LPG hydraulic w/IHT. Includes tool system manifold aux heat exchanger generator control / PTO switch tool sytem / PTO switch (both switches accessible by driver) and a generator gauge panel located adjacent to breaker box. Generator location: [#LOC]. | 25122 |
| 5250-0146 | Generator PTO engage programmed through multiplex display. For use on Typhoon X and CIIX cabs only. | 223 |
| 5250-0147 | Generator Smart Power 10KW hydraulic Liberator model Li10 (with top mount cooler and compatible with an XRT pump). Includes generator control / PTO engage switch and a gauge panel located adjacent to breaker box. Generator location: [#LOC]. | 27722 |
| 5250-0151 | Generator Harrison 6KW MAS hydraulic. Includes generator control/PTO engage switch and a gauge panel located adjacent to breaker box. Generator location: [#LOC]. | 14471 |
| 5250-0152 | Generator Harrison 10KW MAS hydraulic. Includes generator control/PTO engage switch and a gauge panel located adjacent to breaker box. Location: [#LOC] | 18579 |
| 5255-0001 | 3rd party generator test with pump. | 103 |
| 5260-0000 | Generator air deflector for Onan hydraulic. When generator is compartment mounted or mounted in a pan on an aerial body engineering is to specify updraft or downdraft. | 503 |
| 5260-0001 | Remote start for diesel generator. Location: [#LOC]. | 475 |
| 5260-0002 | Remote control starting kit for Honda EM3800SX EM4000 EM5000SX and EM6500SX generators. Locate [#LOC]. | 819 |
| 5260-0004 | Generator prewire for dealer supplied and installed 5 KW portable generator. Includes 12 volt wiring and cable between breaker box. Prewire to [#LOC]. | 308 |
| 5260-0006 | Compartment door(s) of compartment mounted generator to have interlock. | 231 |
| 5260-0008 | Generator prewire for dealer supplied and installed 6.5KW portable generator. Includes 12volt wiring and cable between breaker box. Prewire to [#LOC]. | 377 |
| 5260-0009 | Generator oil drain valve with tube extending below driver side pump panel. | 240 |
| 5260-0010 | Remote start switches for Honda EM3800SX portable generator. Honda remote start kit with E-ONE supplied switches on pump panel. This option may void factory generator warranty from Honda. | 1151 |
| 5260-0011 | Extend exhaust pipe from dunnage pan mounted portable generator into pump compartment using stainless steel flexible pipe. | 108 |
| 5260-0013 | Locate generator gauge panel to the outboard side of the breaker box. | 138 |
| 5260-0014 | Oil drain valve with tube extending below officer side pump panel. | 240 |
| 5260-0015 | Generator prewire for dealer supplied and installed 2.5 KW portable generator. Includes 12volt wiring and cable between breaker box with #66W47 posi-lock Woodhead recpt. Prewire to R1 forward wall up high. | 509 |
| 5260-0016 | Extend exhaust pipe from dunnage pan mounted portable generator in line with main exhaust system using stainless steel flexible pipe. | 108 |
| 5260-0017 | Compartment door(s) of compartment mounted compressor to have interlock. | 231 |
| 5260-0019 | The exhaust of the gas generator to be routed downward and to the exit to below the unit to the officer side of the unit. | 306 |
| 5260-0020 | Compartment door(s) of compartment mounted electric dump valve to have interlock. | 231 |
| 5260-0021 | Oil drain valve with tube extending below driver side pump panel. | 240 |
| 5260-0023 | Generator platform to raise the generator up 8" in the storage pan. Generator raised due to heat from generator exhaust. | 456 |
| 5260-0024 | Locate generator gauge panel on the pump operators panel in lieu of standard location adjacent to breaker box. | 138 |
| 5260-0025 | Generator prewire for dealer supplied and installed 3.5 KW portable generator (Honda or other with equivalent dimensions). Includes 12 volt wiring and A/C cabling to breaker box. Prewire to [#LOC]. | 308 |
| 5260-0027 | Locate generator gauge panel above breaker box on a formed bracket. See photos on file with sales. | 138 |
| 5260-0032 | Bolt-on diamond plate cover on top of generator. See photos on file. | 298 |
| 5260-0033 | Diamond plate guard to protect the generator's wiring and harnesses in the dunnage pan. The guard will go full height of the dunnage pan forward to rear separating the generator and breaker box from the other side (driver's side) of the dunnage pan. | 382 |
| 5260-0034 | Vertical exhaust for Harrison MCR and MPC generators 6KW - 20KW. | 583 |

| Item No. | Description | |
|---|---|---|
| 5260-0037 | Generated auxiliary 12V power system wired through diesel generator. System includes (3) Power Max 100A 12V converters to power VMUX electrical system. Generator not included (engine off but ignition must be in "on" posiion). Requires Engineering review for generator and 12V power requirements. | 7294 |
| 5260-0039 | Generator prewire for dealer supplied and installed 5.5KW portable generator. Includes 12volt wiring and cable between breaker box. Prewire to dunnage pan. | 437 |
| 5260-0041 | Idle reduction system powered by a diesel generator. System includes (2) Power Max 100A 12V converters to power the vehicle electrical system. Requires diesel generator. Requires Engineering review for generator and 12V power requirements. | 4560 |
| 5260-0042 | Compartment door(s) on officer side to be interlocked with ladder rack. | 231 |
| 5260-0046 | Generator prewire for dealer supplied and installed 2KW portable generator. Includes 12 volt wiring and cable between breaker box. Prewire to [#LOC]. | 340 |
| 5260-0047 | Aesthetic shield for hydraulic generator on outboard end of dunnage pan. To be 3-sided open top and constructed from diamond plate. | 503 |
| 5260-0048 | Hinged diamond plate cover with out access hole on top of generator. Cover is to be hinged so as to tilt forward of the generator. See photos on file. | 298 |
| 5260-0050 | Wiring and hydraulic line(s) (if equipped) covers for compartment mounted generator. | 312 |
| 5260-0054 | Generator prewire for dealer supplied and installed 3KW portable generator. Includes 12 volt wiring and cable between breaker box. Prewire to [#LOC]. | 340 |
| 5300-0000 | Light bar Code 3 model XL5100 (PR) 22" Long. All red lens. Location: [#LOC] | 1400 |
| 5300-0003 | Light bar Code 3 model 556A3 56" long with all red lenses. Location: Centered on the front cab roof | 1926 |
| 5300-0004 | Light bar Code 3 model 718A1 (PR) 18" Long. Red Upper / Clear Lower lens. Location: [#LOC]. | 1578 |
| 5300-0015 | Light bars Federal Signal ADX2201 LED (PR) with red lenses. Location: [#LOC]. | 3487 |
| 5300-0017 | Light bar Federal Signal Jet Stream 48" LED with R/W/R lenses red diodes and single traffic clearing light. Location: Centered on the front cab roof | 2860 |
| 5300-0020 | Light bar Federal Signal JetStream JLX54HH 54" LED. Red Solaris reflectors with red domes each side and (2) center clear TCL lights. Location: Centered on the front cab roof. | 3182 |
| 5300-0021 | Light bar Federal Signal JetSolaris 60" LED. Red Solaris reflectors with clear domes. NFPA compliant. Does not require 2 addl side facing bars. Location: Centered on the front cab roof. | 3024 |
| 5300-0023 | Light bars Federal Signal 22I (PR). Location: [#LOC]. | 1264 |
| 5300-0024 | Light bar Federal Signal Aerodynic 25RQL-Fast 52" with red/clear lens. Location: Centered on the front cab roof. | 1754 |
| 5300-0026 | Light bar Federal Signal Aerodynic ADL5202 52" with red/clear/red lens. Location: Centered on the front cab roof. | 1657 |
| 5300-0028 | Light bar Federal Signal Aerodynic ADX5271 52" with 10 red Solaris LED reflectors. Location: Centered on the front cab roof | 3359 |
| 5300-0029 | Light bar Federal Signal AeroDynic ADX7201 72" with 8 red Solaris LED reflectors. Location: Centered on the front cab roof. | 3519 |
| 5300-0030 | Light bar Federal Signal Aerodynic AH1LC 72" with red/clear lens. Location: Centered on the front cab roof. | 2114 |
| 5300-0031 | Light bar Federal Signal Aerodynic AH2LC 72" with red/clear lens. Location: Centered on the front cab roof | 2198 |
| 5300-0044 | Light bar Federal Signal Vector VC6001. Location: Centered on the front cab roof | 2480 |
| 5300-0047 | Light bar Whelen model 9M380NQ66 w/MKEZ7 mounts. Location: Centered on the front cab roof. | 3195 |
| 5300-0048 | Light bar Whelen Centurion model C300700N 72". Location: Centered on the front cab roof | 1952 |
| 5300-0049 | Light bar Whelen Edge model 9M380NV 66" with MKEZ7 mounts. Location: Centered on the front cab roof | 3656 |
| 5300-0050 | Light bar Whelen Edge model 9M387NQ 72" with MKEZ7 mounts without rear facing strobes. N/A on INTL Chassis. Location: Centered on the front cab roof | 3362 |
| 5300-0051 | Light bar Whelen model 9M387NV 72" all strobe with MKEZ7 mounts. N/A with Vista roof with front facing windows. N/A on INTL Chassis. Location: Centered on the front cab roof | 3362 |
| 5300-0053 | Light bar Whelen Freedom model FN66QLED 66" with MKEZ7 mounts. All LED light bar without rear facing LEDs. Location: Centered on the front cab roof. | 4330 |
| 5300-0055 | Light bar Whelen Freedom model FN72QLED 72" LED with MKEZ7 mounts and clear lenses. Location: Centered on the front cab roof. | 4440 |
| 5300-0056 | Light bar Whelen Freedom model FN72VLED 72" LED with MKEZ7 mounts. N/A INTL Chassis or Vista roofs with front facing windows. Location: Centered on the front cab roof. | 4440 |
| 5300-0059 | Light bar Whelen model 9MINNFPA 28 1/4" strobe with MKEZ7 mounts (PR). Location: [#LOC] | 3405 |
| 5300-0060 | Light bar Code 3 model 574NFPA1 74" with all red lenses. Location: Centered on the front cab roof. | 2227 |
| 5300-0065 | Light bar Federal Signal ADX2202 LED (PR) with red lenses. Located side facing only. Not NFPA compliant forward facing. Location: [#LOC]. | 2162 |
| 5300-0070 | Light bar Federal Signal JetStream JLX5401 LED 54". Red Solaris reflectors with red domes. Location: Centered on the front cab roof | 2589 |
| 5300-0074 | Whelen Mini-Freedom LED light bars (PR) model FNMINI 24" with red/clear lenses and low profile MK9 mounts. Location: [#LOC]. | 5022 |

| Item No. | Description | |
|---|---|---|
| 5300-0082 | Whelen Mini-Freedom LED side facing light bars (PR) model FT8RRRRF 24" with MKEZ7 mounts. Location: [#LOC]. Lens color: Clear. | 4811 |
| 5300-0084 | Whelen Mini-Freedom LED light bars (PR) model FNMINI 24" with red/clear lenses and MKEZ7 mounts. Location: [#LOC]. | 5022 |
| 5300-0086 | Light bar Code 3 MX model 758A1. Upper deck contains (4) rotators (2 ea side) with red lenses and (2) clear oscilasers. Lower deck contains (2) frt red halogen flashers outboard intersection sweeps and clear lenses. Loc: Centered on the frt cab roof. | 2148 |
| 5300-0087 | Light bar Code 3 model XL5100 22" Long. All red lens. Location: Centered on the front cab roof. | 702 |
| 5300-0088 | Light bar Whelen Freedom model FN55VLED 55" LED with MKEZ7 mounts. N/A with Vista roofs with front facing windows. Location: Centered on the front cab roof. | 3923 |
| 5300-0089 | Light bar Code 3 MX model 769A1. Upper deck contains 9 rotators w/ red lenses. Lower deck contains intersection sweeps w/clear lenses. Location: Centered on the front cab roof. | 2225 |
| 5300-0091 | Light bar Code 3 Excalibur model X58A. Upper deck contains (4) rotators (two ea side) with red lenses and (2) white oscilasers with clear lenses. Lower deck contains (4) takedown lights and two alley lights. Location: Centered on the front cab roof. | 2440 |
| 5300-0092 | Light bar Whelen Freedom model FN55QLED 55" LED with takedown lights MKEZ7 mounts and clear lenses. Location: Centered on the front cab roof. | 4250 |
| 5300-0093 | Light bar Whelen Freedom model FN72VLED 72" LED with Opticom and MKEZ7 mounts. N/A INTL Chassis or Vista roofs with front facing windows. Location: Centered on the front cab roof. | 7432 |
| 5300-0094 | Light bar Federal Signal 22I (ADL2201Y) with 175 FPM rotators (PR). Location: [#LOC] | 1264 |
| 5300-0095 | Light bar Code 3 MX model 769 with R/C/C/C/B lenses. Upper deck contains 9 rotators. Lower deck contains intersection sweeps w/clear lenses. Location: Centered on the front cab roof. | 2225 |
| 5300-0096 | Light bar Code 3 Javelin LED model JX67A. Location: Centered on the front cab roof. | 7468 |
| 5300-0099 | Light bar Federal Signal JLX21 LED (PR). Located side facing only. Location: [#LOC]. | 2120 |
| 5300-0100 | Light bar Whelen Freedom model FN72QLED 72" LED with clear lenses and MKEZ7 mounts. Includes (8) red LED and (2) white LED. N/A INTL Chassis. Location: Centered on the front cab roof. | 4935 |
| 5300-0101 | Light bar Federal Signal Aerodynic ADL5202 52" with blue lenses. Location: Centered on the front cab roof. | 1657 |
| 5300-0102 | Whelen Mini-Freedom LED side facing light bars (PR) model FT8RCRCF 24" with MKEZ7 mounts. Location: [#LOC]. Lense colors: Clear. | 4774 |
| 5300-0103 | Light bar Whelen Freedom model FN66QLED 66" LED with 795H Opticom takedown lights and MKEZ7 mounts. Location: Centered on the front cab roof. | 6128 |
| 5300-0105 | Light bar Code 3 model 718A1 (PR) 18" Long. Red upper/clear lower lens driver side and blue upper/clear lower officer side. Location: [#LOC] | 1365 |
| 5300-0106 | Light bar Code 3 MX model 769 with B/B/C/R/R upper lenses clear lower lenses. Upper deck contains (8) rotators; (4) each side and alley lights. Lower deck contains intersection sweeps (4) LED warning; (2) blue driver and (2) red officer. Includes pre-wire for opticom in the center of the upper deck. Location: Centered on the front cab roof. Requires 5300-0105. | 3992 |
| 5300-0107 | Light bar Code 3 MX7400-ALRC-777 58" long. Location: Centered on the front cab roof. Includes (1) steady burn red light for California DOT. | 5779 |
| 5300-0108 | Light bar Code 3 model MX7100-ALRC-724 (PR) 18" Long. Location: At angle behind main light bar with front corners of bars even with outside edge of main bar. | 1402 |
| 5300-0110 | Light bar Whelen Freedom model FN72QLED 72" LED with MK8H high mounts. Includes (12) red LED and (2) white LED. N/A INTL Chassis. Location: Centered on the front cab roof. | 6235 |
| 5300-0111 | Whelen Mini-Freedom LED side facing light bars (PR) model FT8RRRRF 24" with MK8H high mounts. Location: [#LOC]. Lens colors: Clear. | 5036 |
| 5300-0113 | Light bar Whelen Freedom model FL2RRRRF 72" LED with MKEZ7 mounts. Includes (10) red LEDs and (4) blue LEDs. N/A INTL Chassis. Location: Centered on the front cab roof. | 5924 |
| 5300-0117 | Light bar Code 3 model 729A (PR) 29" long. Red upper / clear lower lens. Location: [#LOC] | 3999 |
| 5300-0118 | Light bar Code 3 MX model 769A with R/W/W/W/R upper lenses and clear lower lenses. Upper deck contains (6) rotators and 3-M Opticom. Lower deck contains intersection sweeps (6) red LED warning and (4) white LED warning. Location: Centered on the front cab roof. | 8281 |
| 5300-0125 | Light bar Whelen Freedom model FN82QLED 82" LED with MKEZ7 mounts and clear lenses. Includes (12) red (2) white LEDs and pre-wire for Opticom. N/A commercial Chassis. Location: Centered on the front cab roof | 5734 |
| 5300-0126 | Light bar Whelen Freedom model FN72VLED 72" LED with 795H Opticom (12) red LEDs (2) clear LEDs and MKEZ7 mounts. N/A INTL Chassis or Vista roofs with front facing windows. Location: Centered on the front cab roof. | 9093 |
| 5300-0128 | Federal ADX7250 LED Light bar 72". Includes (12) Solaris 6-LED red reflectors (4) Solaris 9-LED red reflectors and (12) Solaris 6-LED white reflectors. Includes (2) flashers (1) for red LEDs and (1) for white LEDs. | 5504 |
| 5300-0129 | Light bar Federal Signal ADX2205 LED (PR). Location: [#LOC] | 6004 |
| 5300-0130 | Light bar Whelen Freedom model FN82VLED 82" LED with 3M Opticom and MKEZ7 mounts. N/A INTL Chassis or Vista roofs with front facing windows. Location: Centered on the front cab roof | 7097 |
| 5300-0131 | Light bar Whelen model FFX2068 19" LED. Location: Centered front of cab below windshield | 1905 |

| Item No. | Description | |
|---|---|---|
| 5300-0137 | Light bar Whelen Freedom model FN72VLED 72" LED with Opticom and MKEZ7 mounts. Includes (10) red LED and (2) white LED. N/A INTL Chassis. Location: Centered on the front cab roof. | 8423 |
| 5300-0138 | Light bar package Federal Signal Escape LED (5) bar package. Includes: (1) 40'' LED front bar w/ Opticom (2) diagonal 26'' LED bars and (2) 28'' side LED bars. | 13205 |
| 5300-0140 | Light bar Whelen Freedom model FN72QLED 72" LED with MK8 high mounts and clear lenses. Includes (10) red LED and (4) white LED. N/A INTL Chassis. Location: Centered on the front cab roof. | 6241 |
| 5300-0142 | Light bar Federal Signal JetStream 60" LED. Red/White Solaris reflectors with clear domes. NFPA Compliant does not require 2 addl side facing bars. Location: Centered on the front cab roof. | 3203 |
| 5300-0144 | Light bar Whelen Edge model 9M387NQ 72" with MKEZ7 mounts pre-wire for Opticom and without rear facing strobes. N/A on INTL Chassis. Location: Centered on the front cab roof | 3674 |
| 5300-0145 | Federal ADX7204 LED Lightbar 72". Includes (12) Solaris 9-LED red reflectors and Opticom. Location: Centered on the front cab roof. | 6669 |
| 5300-0148 | Light bar Whelen model 9MMEDFFD 28 1/4" strobe with MK9 mounts (PR). Lense colors to be RRCR (front to rear). Location: [#LOC] | 3120 |
| 5300-0151 | Light bar Whelen Freedom model FN66VLED 66" with MKEZ7 mounts. All LED light bar. Location: Centered on the front cab roof | 4330 |
| 5300-0154 | Light bar Federal Signal JetStream 60'' LED. Red Solaris reflectors and red domes with clear center and 3M 792 Opticom. NFPA Compliant does not require 2 addl side facing bars. Location: Centered on the front cab roof | 7743 |
| 5300-0155 | Federal ADX5283 LED Lightbar 52" with clear domes. Includes (16) Solaris 6-LED red reflectors (4) Solaris 6-LED white reflectors TCL and Opticom. Includes (2) flashers (1) for red LEDs and (1) for white LEDs. | 7167 |
| 5300-0157 | Whelen Mini-Freedom LED light bars (PR) model FNMINI 24" with clear lenses and MKEZ7 mounts. Location: [#LOC]. | 5022 |
| 5300-0158 | Light bar Whelen Freedom model FN72QLED 72" LED with 3M Opticom clear lenses and MKEZ7 mounts. N/A INTL Chassis. Location: Centered on the front cab roof. | 7181 |
| 5300-0159 | Light bar Federal Signal ADX7202 72" with (6) red (2) white Solaris LED reflectors and 3M Opticom. Location: Centered on the front cab roof | 6067 |
| 5300-0160 | Light bar Federal Signal JetSolaris 60" LED. Red Solaris reflectors with center traffic clearing light. NFPA compliant does not require 2 addl side facing bars. Location: Centered on the front cab roof. | 3116 |
| 5300-0161 | Light bar Whelen Freedom model FN72VLED 72" LED with Opticom and MKEZ7 mounts. Includes (10) red LED (2) white LED and (2) green LED. N/A INTL Chassis. Location: Centered on the front cab roof. | 9341 |
| 5300-0162 | Whelen Mini-Freedom LED side facing light bars (PR) model FT8RARRF driver and FT8RRARF officer 24" with MKEZ7 mounts. Location: [#LOC]. Lense colors: Clear. | 4811 |
| 5300-0163 | Light bar Whelen Freedom model FN72VLED 72" LED with offset Opticom and MKEZ7 mounts. N/A INTL Chassis or Vista roofs with front facing windows. Location: Centered on the front cab roof. | 7432 |
| 5300-0164 | Light bar package Federal Signal Escape LED (5) bar package. Includes: (1) 40'' LED front bar (RRWRR) (2) diagonal 26'' LED bars (RWR) and (2) 28'' side LED bars (RRR). | 10171 |
| 5300-0166 | Light bar Whelen Freedom model FN60VLED 60" LED with MKEZ7 mounts. N/A on Vista roofs with front facing windows. Location: Centered on the front cab roof | 5573 |
| 5300-0167 | Whelen Mini-Freedom LED side facing light bars (PR) model FT8RRRRF 28.25" with MKEZ7 mounts. Location: [#LOC]. Lense colors: Clear. | 6074 |
| 5300-0168 | Whelen Mini-Freedom LED side facing light bars (PR) model FT8RRRRF 24" with MKEZ7 mounts. Location: [#LOC]. Lens colors: Red. | 4811 |
| 5300-0169 | Light bar Whelen Freedom model FN72QLED 72" LED with red lenses and MKEZ7 mounts. Includes (8) red LED and (2) white LED. N/A INTL Chassis. Location: Centered on the front cab roof. | 4935 |
| 5300-0171 | Light bar Federal Signal Aerodynic ADL5202 52" with driver red and officer blue lenses. Location: Centered on the front cab roof. | 1657 |
| 5300-0173 | Light bar Whelen Freedom model FN72VLED 72" LED with MK8 high mounts. Includes (12) red LED (2) amber LED and (4) white LED. N/A INTL Chassis or Vista roofs with front facing windows. Location: Centered on the front cab roof. | 7199 |
| 5300-0174 | Light bar Whelen Freedom model FN82VLED 82" LED with MKEZ7 mounts and red lenses. Includes (1) driver forward facing steady burn to meet California law. N/A INTL Chassis or Vista roofs with front facing windows. Location: Centered on the front cab roof | 5244 |
| 5300-0176 | Light bar Whelen Freedom model FN72QLED 72" LED with MK8 high mounts. N/A INTL Chassis. Location: Centered on the front cab roof. | 4440 |
| 5300-0179 | Light bar Federal Signal JLX21 LED red/blue(PR). Locate blue forward if side facing. Location: [#LOC] | 2739 |
| 5300-0184 | Whelen Mini-Freedom LED side facing light bars (PR) model FT8RCCRF 28.25" with R/C/C/R lenses and MKEZ7 mounts. Location: [#LOC] | 4774 |
| 5300-0185 | Light bar Whelen Freedom model FN72QLED 72" LED with clear lenses MKEZ7 mounts and pre-wire for 3M opticom. Includes (8) red LED and (2) white LED. N/A INTL Chassis. Location: Centered on the front cab roof | 5024 |

| Item No. | Description | |
|---|---|---|
| 5300-0187 | Light bar Whelen Freedom model FN72QLED 72" LED with clear lenses and MKH8 high mounts. Includes (8) red LED and (2) white LED. N/A INTL Chassis. Location: Centered on the front cab roof | 4984 |
| 5300-0188 | Light bar Whelen Freedom model FN72VLED 72" LED with Opticom and MK8 high mounts. N/A INTL Chassis or Vista roofs with front facing windows. Location: Centered on the front cab roof. | 7483 |
| 5300-0190 | Light bar Whelen Freedom model FN72QLED 72" LED with Opticom and MK8 high mounts. Includes (6) red LED (4) Blue LED and (2) white LED. N/A INTL Chassis. Location: Centered on the front cab roof. | 8439 |
| 5300-0192 | Light bar Code 3 Model XP9588NFPA1 88" LED. All red with clear lenses. Not available on commercial cabs. Location: Centered on the front cab roof. | 5499 |
| 5300-0193 | Code3 model XP9501NFPA1 (PR) red LED with clear domes. Location: [#LOC]. | 2336 |
| 5300-0195 | Light bar Federal Signal JetStream 60" LED. Red driver/Blue officer Solaris reflectors. Location: Centered on the front cab roof | 2652 |
| 5300-0197 | Light bar Whelen Freedom model FN72QLED 72" LED with GTT Opticom red lenses and MKH8 high mounts. N/A INTL Chassis. Location: Centered on the front cab roof. | 7238 |
| 5300-0198 | Light bar Federal Signal ADX2215-SMV LED side facing (PR) with driver blue forward/red rearward and officer red forward/blue rearward facing lenses. Location: [#LOC]. | 4920 |
| 5300-0199 | Light bar Whelen Freedom model FL2RRRR 72" LED with Opticom and MKEZ7 mounts. Includes (12) red LED. N/A INTL Chassis. Location: Centered on the front cab roof. | 8393 |
| 5300-0202 | Light bar Weldon Aero Maxx II 59" LED. NFPA Compliant does not require 2 addl side facing bars. Location: Centered on the front cab roof | 3446 |
| 5300-0203 | Light bar Whelen Freedom model FN72QLED 72" LED with 3M 795H Opticom (10) red LEDs (2) clear LEDs and MK8 high mounts. For use with front vista windows. Location: Centered on the front cab roof. | 8394 |
| 5300-0204 | Federal ADX7262 LED Lightbar 72" with clear lenses. Includes (12) Solaris 6-LED red reflectors (8) Solaris 6-LED blue reflectors (4) Solaris 9-LED red reflectors and a 3M Opticom. Includes (2) flashers (1) for red LEDs and (1) for blue LEDs. | 6707 |
| 5300-0205 | Whelen Mini-Freedom LED side facing light bars (PR) model FT8CRRCF 28.25" with CRRC lenses and MKEZ7 mounts. Location: [#LOC]. | 4774 |
| 5300-0206 | Light bar package Whelen 4500 LED (5) bar package. Includes: (1) 40'' LED front bar w/ Opticom (2) diagonal 24'' LED bars and (2) 28'' side LED bars. | 14884 |
| 5300-0207 | Federal ADX7250 LED Lightbar 72". Includes (12) Solaris 6-LED red reflectors (4) Solaris 9-LED red reflectors and (10) Solaris 6-LED white reflectors and Opticom. Includes (2) flashers (1) for red LEDs and (1) for white LEDs. | 8334 |
| 5300-0209 | Federal ADX7265 LED Lightbar 72". Includes (10) Solaris 6-LED red reflectors (10) Solaris 6-LED blue reflectors (4) Solaris 9-LED red reflectors and a 3M Opticom. Includes (2) flashers (1) for red LEDs and (1) for blue LEDs. | 6707 |
| 5300-0211 | Light bar Whelen Freedom model FN60QLED 60" LED with MKEZ7 mounts. Includes (8) red (2) white and (2) amber modules. Location: Centered on the front cab roof | 5679 |
| 5300-0212 | Light bar Whelen Freedom model FN72VLED 72" LED with MKEZ7 mounts. Includes (10) red LED and (4) white LED. N/A INTL Chassis. Location: Centered on the front cab roof. | 5775 |
| 5300-0213 | Light bar Code 3 MX model 769NFPA1 with Opticom. Upper deck contains 5 rotators w/ red lenses. Lower deck contains 795H Opticom and intersection sweeps w/clear lenses. Location: Centered on the front cab roof. | 3732 |
| 5300-0214 | Light bar Whelen Freedom model FN72QLED 72" LED with GTT Opticom clear lenses and MKH8 high mounts. N/A INTL Chassis. Location: Centered on the front cab roof | 7238 |
| 5300-0215 | Light bar Whelen Freedom model FL2RRRRF 72" LED with MK8H high mounts. Includes (10) red LEDs and (4) blue LEDs. N/A INTL Chassis. Location: Centered on the front cab roof. | 5981 |
| 5300-0216 | Light bar Whelen Freedom 72" LED with (8) red LEDs (2) white LEDs side facing LR11 alley lights 3M Opticom clear lenses and MKEZ7 mounts. N/A INTL Chassis. Location: Centered on the front cab roof | 7553 |
| 5300-0217 | Light bar Federal Signal AeroDynic ADX7205 72" with 12 red Solaris LED reflectors and 2 traffic clearing lts. Location: Centered on the front cab roof. | 4067 |
| 5300-0219 | Light bar Whelen Freedom model FL2RRRR 72" LED with MKEZ7 mounts and clear lenses. Includes (12) red LEDs (2) clear LEDs and GTT Opticom. N/A INTL Chassis and vista cabs. Location: Centered on the front cab roof. | 7389 |
| 5300-0232 | Light bar Code 3 Excalibur model X69A. Upper deck contains (8) OPX-6 red LED modules and (1) LEDX modules in the center. Lower deck contains (10) OPX-6 red LED modules with a center mounted N-3 emitter. Lens color: Clear. Location: Centered on the front cab roof. | 6560 |
| 5300-0233 | Light bar Code 3 Excalibur 36". Upper contains (6) OPX-6 red LED modules. Lower contains (6) OPX-6 red LED modules. Lens color clear. Location: [#LOC]. | 8982 |
| 5300-0237 | Light bar Whelen Freedom model FN66QLED 66" with 3M 9592 Opticom (switched on dash panel) and MKEZ7 mounts. All LED light bar without rear facing LEDs. Driver side red lights and officer side to be blue (standard white center) Location: Centered on the front cab roof. | 6414 |
| 5300-0240 | Whelen Justice model JE2NFPA 56" with MKEZ7 mounts. All LED (forward facing) light bar. | 730 |

| Item No. | Description | |
|---|---|---|
| 5300-0243 | Light bar Whelen Freedom model FN82QLED 82" LED with clear lenses Opticom and MKEZ7 mounts. Includes (7) red LED and (7) blue LED. N/A INTL Chassis. Location: Centered on the front cab roof. | 7274 |
| 5300-0244 | Whelen Mini-Freedom LED side facing light bars (PR) model FT8RRRRF driver and FT8BBBBF officer 28.25" with MKEZ7 mounts. Location: [#LOC]. Lense colors: Clear. | 4811 |
| 5300-0246 | Whelen Mini-Freedom LED light bars (PR) model FT8RCRCF 28.25" with clear lenses and MKEZ7 mounts. Location: [#LOC]. | 5022 |
| 5300-0250 | Light bar package Whelen 4500 red/blue LED (5) bar package. Includes: (1) 40'' LED front bar w/ Opticom (2) diagonal 24'' LED bars and (2) 28'' side LED bars. | 14884 |
| 5300-0251 | Light bar Whelen Freedom model FN72QLED 72" LED with clear lenses Opticom and MKEZ7 mounts. Includes (7) red LED (3) blue LED and (2) white LED. N/A INTL Chassis. Location: Centered on the front cab roof. | 7670 |
| 5300-0252 | Light bar Whelen Freedom model FN72QLED 72" LED red/blue with MKEZ7 mounts and clear lenses. N/A INTL Chassis. Location: Centered on the front cab roof | 4440 |
| 5300-0253 | Whelen Mini-Freedom LED side facing light bars (PR) model FT8RRBBF driver and FT8BBRRF officer 28.25" with MKEZ7 mounts. Location: [#LOC]. Lense colors: Clear. | 4811 |
| 5300-0255 | Light bar Federal Signal JLX2133-CNFPA LED (PR) with clear lenses. Location: [#LOC]. | 2520 |
| 5300-0257 | Light bar Whelen Freedom model FN72QLED 72" LED with MKEZ7 mounts. Includes (1) driver forward facing steady burn to meet California law. N/A INTL Chassis. Location: Centered on the front cab roof. | 4440 |
| 5300-0260 | Light bar Whelen Freedom 66" LED with 3M Opticom red lenses and MKEZ7 mounts. Includes (10) red LED and (2) LR11 dual alley lights. Location: Centered on the front cab roof. | 7009 |
| 5300-0261 | Light bar Federal Signal Legend. (2) 24" light bars LED side facing only. Lenses color: clear. Location: [#LOC]. | 4048 |
| 5300-0263 | Light bar Federal Signal Legend 61" LED with alley lights clear lenses and red diodes. Location: Centered on the front cab roof | 3611 |
| 5300-0264 | Whelen Mini-Freedom LED side facing light bars (PR) model FT8RCRRF driver and FT8BCBBF officer 24" with MKEZ7 mounts. Location: each side over rear cab doors. Lense colors: Clear. | 4774 |
| 5300-0265 | Whelen Mini-Freedom LED side facing light bars (PR) model FT8RCRRF driver and FT8BCBBF officer 24" with MKEZ7 mounts. Location: front cab corners. Lense colors: Clear. | 4774 |
| 5300-0267 | Light bar Whelen Justice model JE2NFPA 56" LED with clear lenses and MKEZ7 mounts. N/A on Vista roofs with front facing windows. Includes (4) red corner facing LIN6 LED lights (6) forward facing CON3 Linear LED lights; (4) red (2) white. Location: Centered on the front cab roof. | 2650 |
| 5300-0269 | Light bar Whelen Freedom model FN60VLED 60" LED with clear lenses and MKEZ7 mounts. Includes (6) red (2) white (4) blue modules and GTT Opticom. Location: Centered on the front cab roof. | 6787 |
| 5300-0270 | Light bar Whelen model 45B38 38" LED with Opticom. Location: Centered front of cab below windshield | 3245 |
| 5300-0271 | Light bar Whelen Freedom model FN72QLED 72" LED red/blue with MK8 high mounts. N/A INTL Chassis. Location: Centered on the front cab roof | 4498 |
| 5300-0277 | Light bar Whelen Freedom model FN72VLED 72" LED with MK8 mounts. N/A INTL Chassis or Vista roofs with front facing windows. Location: Centered on the front cab roof. | 4497 |
| 5300-0278 | Light bar Whelen 4500 LED red/clear (PR) side facing. Includes: (2) 28'' side LED bars. Location: [#LOC]. | 5580 |
| 5300-0279 | Light bar Whelen 4500 LED red/clear (PR). Includes: (2) 24'' LED bars. Location: [#LOC]. | 5330 |
| 5300-0284 | Light bar Whelen Freedom model FN82VLED 82" LED with MKEZ7 mounts and clear lenses. Includes (12) red (4) white LEDs. N/A commercial Chassis. Location: Centered on the front cab roof | 6636 |
| 5300-0285 | Whelen Mini-Freedom LED side facing light bars (PR) model FT8RRRRF 24" with MK8H high mounts. Location: [#LOC]. Lense colors: Red. | 5036 |
| 5300-0286 | Light bar Whelen Freedom model FN72QLED 72" LED with MK8 high mounts. Includes (14) red LED with red lenses. N/A INTL Chassis. Location: Centered on the front cab roof. | 6241 |
| 5300-0287 | Light bar Whelen Freedom model FN82VLED 82" LED with MKEZ7 mounts and clear lenses. Includes (14) red (4) white LEDs. N/A commercial Chassis. Location: Centered on the front cab roof | 7019 |
| 5300-0288 | Light bar Federal Signal JetStream 60" LED. Red/Blue Solaris reflectors with clear domes. NFPA Compliant does not require 2 addl side facing bars. Location: Centered on the front cab roof | 3203 |
| 5300-0290 | Whelen Mini-Freedom LED light bars (PR) model FT8 28.25" with clear lenses and MKEZ7 mounts. Includes: (4) corner mounted red LED (2) split red/white forward facing LED flashing in X pattern and (1) end mounted red LED Location: [#LOC]. | 6130 |
| 5300-0291 | Whelen Mini-Freedom LED light bars (PR) model FT8 28.25" with clear lenses and MK8H high mounts. Includes: (4)corner mounted red LED (2) split red/white forward facing LED flashing in X pattern and (1) end mounted red LED Location: [#LOC]. | 6185 |
| 5300-0292 | Light bar Whelen Freedom model FN72QLED 72" LED with MK8 high mounts. Includes (8) red LED (2) split red/white flashing in X pattern and (4) white LED. N/A INTL Chassis. Location: Centered on the front cab roof. | 6536 |
| 5300-0293 | Light bar Federal Signal Legend 61" LED with clear lenses and red diodes. Location: Centered on the front cab roof | 4356 |

| Item No. | Description | |
|---|---|---|
| 5300-0294 | Light bar Whelen Freedom model FN72QLED 72" LED with MK8H mounts. Centered on the front cab roof. | 4381 |
| 5300-0295 | Light bar Whelen Freedom model FN72QLED 72" LED with 3M Opticom clear lenses and MKH8 mounts. N/A INTL Chassis. Location: Centered on the front cab roof. | 7181 |
| 5300-0297 | Light bar Whelen Freedom model FN66QLED 66" with MKEZ7 mounts. All LED light bar without rear facing LEDs. Driver side red LED officer blue LED. Location: Centered on the front cab roof. | 4330 |
| 5300-0298 | Light bar Whelen Freedom model FN72QLED 72" LED with MKEZ7 mounts. Location: Centered on the front cab roof. | 4440 |
| 5300-0299 | Light bar Whelen 4500 Series 20" LED (model 45B20). Location: Centered front of cab below windshield. | 1976 |
| 5300-0300 | Light bar Whelen Freedom model FN72QLED 72" LED with 3M Opticom clear lenses and MKEZ7 mounts. N/A INTL Chassis. Location: Centered on the front cab roof. | 7181 |
| 5300-0301 | Light bar Whelen Freedom model FN72QLED 72" LED with Opticom and MK8 high mounts. Includes (8) red LED and (4) white LED with red/clear lenses. N/A INTL Chassis. Location: Centered on the front cab roof. | 6969 |
| 5300-0302 | Light bar Federal Signal Split Vision VSLR8-NFPA1. Two (2) 26.5" 4-pod light bars w/ (3) red and (1) multi-color pods on each bar with red/clear lenses. Location: [#LOC]. | 4594 |
| 5300-0303 | Light bar Whelen Freedom model FN66QLED 66" with MKEZ7 mounts. Includes (10) red LED with red lenses and (2) white LED with clear lenses. Location: Centered on the front cab roof. | 5167 |
| 5300-0304 | Light bar Whelen Freedom model FN72QLED 72" LED with MK8 high mounts. Includes (5) red LED (5) blue and (4) white LED . N/A INTL Chassis. Location: Centered on the front cab roof. | 6241 |
| 5300-0305 | Light bar Whelen Freedom model FN55QLED 55" LED with driver red/officer blue LEDS takedown lights and MKEZ7 mounts. Location: Centered on the front cab roof. | 4250 |
| 5300-0306 | Light bar Federal Signal JetSolaris 60" LED. Red and blue Solaris reflectors with center traffic clearing light. NFPA Compliant does not require 2 addl side facing bars. Location: Centered on the front body mounted to the roof with no upper body or mounted on a bracket in front of the body with 13" upper body. | 3116 |
| 5300-0307 | Light bar Whelen Freedom model FN72QLED 72" LED with clear lenses Opticom and MKEZ7 mounts. Includes (10) red LED and (2) white LED. N/A INTL Chassis. Location: Centered on the front cab roof. | 7670 |
| 5300-0310 | Light bar Whelen Freedom model FN72VLED 72" LED with Opticom and MK8H high mounts. Includes (10) red LED (2) white LED and (2) blue LED. N/A INTL Chassis. Location: Centered on the front cab roof. | 7600 |
| 5300-0313 | Light bar Federal Signal ADX2205 LED (PR) red/clear. State of Maryland only. Location: [#LOC]. | 6004 |
| 5300-0314 | Light bar Federal Signal Legend. (2) 24" light bars LED. Lenses color: clear. (1) Model number LGD24Z-00019 and (1) model number LGD24Z-00020. Location: [#LOC]. | 2365 |
| 5300-0315 | Whelen Mini-Freedom LED side facing light bars (PR) model FT8BRBRF driver and FT8RBRBF officer 28.25" with MKEZ7 mounts. Location: [#LOC]. Lense colors: Clear. | 4811 |
| 5300-0317 | Light bar Whelen Freedom model FN55QLED 55" with GTT 795H Opticom and MKEZ7 mounts. All LED light bar without rear facing LEDs. Location:[#LOC]. | 5608 |
| 5300-0318 | Light bar risers (PR) for the light bars installed on the top of the cab to insure 360 degree visibility. The riser shall raise the as mounted light bar(s) approximately 4" to prevent interference with the brow lighting (if so equipped) and ensure 360 degree visibility is maintained. | 219 |
| 5300-0319 | Light bar Whelen Freedom model FN60VLED 60" LED with MK8H mounts. N/A on Vista roofs with front facing windows. Location: Centered on the front cab roof | 5646 |
| 5300-0322 | Light bar made from (2) PowerArc model M90FK-RC light heads. Each light head houses (12) red LEDs (24 total) with clear lenses and a polished stainless steel flange. Includes oscillating technology. Both light heads when mounted together to make light bar are approximately 20" in length. Location: centered front of cab below windshield. | 1891 |
| 5300-0325 | Light bar Whelen Freedom model FN72VLED 72" LED with 795H Opticom (12) red LEDs (2) clear LEDs and MK8H mounts. N/A INTL Chassis or Vista roofs with front facing windows. Location: Centered on the front cab roof. | 9142 |
| 5300-0326 | Light bar Whelen Freedom model FN72QLED 72" LED with GTT Opticom clear lenses and MK8H mounts. Includes (3) red LED (3) blue LED and (2) white LED. N/A INTL Chassis. Location: Centered on the front cab roof. | 7236 |
| 5300-0327 | Light bar Whelen Freedom model FN82QLED 82" LED with MKEZ7 mounts and clear lenses. Includes (12) red (2) white LEDs. N/A commercial Chassis. Location: Centered on the front cab roof | 5487 |
| 5300-0328 | Light bar Whelen Freedom model FN72QLED 72" LED with MK8 high mounts. Includes (8) red LED (2) blue LED and (4) white LED. N/A INTL Chassis. Location: Centered on the front cab roof. | 6241 |
| 5300-0329 | Light bar Whelen Freedom model FN55QLED 55" LED with driver red/officer blue LEDS takedown lights and MKEZ7 mounts. Location: Centered on the front cab roof. | 4250 |
| 5300-0330 | Light bar Whelen Freedom model FN72QLED 72" LED with clear lenses and MKE7 mounts. Includes (10) red LED and (4) white LED. N/A INTL Chassis. Location: Centered on the front cab roof. | 6241 |
| 5300-0331 | Light bar Federal Signal JetSolaris 60" LED. Clear/white Solaris reflectors with red domes. NFPA compliant. Does not require 2 addl side facing bars. Location: Centered on the front cab roof. | 3024 |

| Item No. | Description | |
|---|---|---|
| 5300-0333 | Whelen Mini-Freedom LED side facing light bars (PR) model FT8RBRP 24" with MKEZ7 mounts. Location: [#LOC]. Lens color: Red/Blue. | 4811 |
| 5300-0334 | Light bar Whelen Freedom model FN72QLED 72" LED GTT Opticom and clear lenses MKEZ7 mounts. Includes (8) red LED and (2) white LED. N/A INTL Chassis. Location: Centered on the front cab roof | 6339 |
| 5300-0335 | Federal ADX7204 LED lightbar 72". Includes (12) Solaris 9-LED red reflectors with clear lenses and Opticom. Location: Centered on the front cab roof. | 6669 |
| 5300-0336 | Federal ADX7204 LED lightbar 72". Includes (12) Solaris 9-LED red reflectors with lens arrangement of R/C/R/C/R/C/C/C/C/R/C/R/C/R and Opticom (with switch accessible to driver). Location: Centered on the front cab roof. | 6669 |
| 5300-0337 | Light bar Whelen Freedom model FN72QLED 72" LED with MK8H high mounts. Includes (8) red LED and (6) white LED. N/A INTL Chassis. Location: Centered on the front cab roof. | 5855 |
| 5300-0339 | Light bar Federal Signal JetSolaris 72" LED. Red and White Solaris reflectors with clear domes. NFPA compliant. Does not require 2 addl side facing bars. Location: Centered on the front cab roof. | 2876 |
| 5300-0343 | Light bar Whelen Freedom model FN72QLED 72" LED with clear lenses MKEZ7 mounts and pre-wire for 3M opticom. Includes (3) red LED (3) blue LED and (2) white LED. N/A INTL Chassis. Location: Centered on the front cab roof | 4243 |
| 5300-0344 | Light bar Whelen Justice model JE0NFPA 62" LED with clear lenses and MKEZ7 mounts. N/A on Vista roofs with front facing windows. Includes (4) red corner facing LIN6 LED lights (6) forward facing CON3 Linear LED lights; (4) red (2) white. Location: Centered on the front cab roof. | 2785 |
| 5300-0345 | Light bar Federal Signal Legend 70" LED with clear lenses and red diodes. Location: Centered on the front cab roof. | 3896 |
| 5300-0346 | Whelen Mini-Freedom LED light bars (PR) model FNMINI 24" with clear lenses and MKEZ7 mounts. Includes red/clear/blue driver and blue/clear/red officer. Location: [#LOC]. | 5022 |
| 5300-0347 | Light bars Federal Signal One (1) center 3 pod Vision SLR model VSLR3S-NFPA1 LED light bar on 4" tall channel riser. One (1) Vision SLR model VSLR85-NFPA1 side light bars containing two (2) 4 pod LED light bars. Lenses to be R/R/W/R R/W/R R/W/R/R. Location: "V" centered on the front cab roof with the center pod mounted on 4" tall channel risers to accommodate an Opticom below (not included). | 6817 |
| 5300-0349 | Light bar Whelen Freedom model FN72QLED 72" LED with clear lenses Opticom and MK8H high mounts. Includes (8) red LED (2) blue LED (2) white (2) LR11 takedown and 795H Opticom. N/A INTL Chassis. Location: Centered on the front cab roof. | 7546 |
| 5300-0350 | Whelen Mini-Freedom LED side facing light bars (PR) model FT8RBRRF 28.25" with clear lenses and MK8H mounts. Location: [#LOC]. | 4829 |
| 5300-0351 | Light bar Whelen Freedom model FN66QLED 66" LED with MK8 high mounts. Includes (13) red LED (7) blue and (2) white takedown LEDs. Location: centered on the front cab roof. | 7589 |
| 5300-0352 | Whelen Mini-Freedom LED light bars (PR) red/blue 24" with clear lenses and MKEZ7 mounts. Location: [#LOC]. | 5022 |
| 5300-0354 | Light bar Federal Signal Split Vision VSLR6. Two (2) 21" 3-pod light bars w/ (3) red pods on each bar with red lenses. Location: [#LOC]. | 3885 |
| 5300-0355 | Light bar Federal Signal Split Vision VSLR6. Two (2) 21" 3-pod light bars w/ (2) red pods and (1) multi-color pod on each bar with red/clear lenses. Location: [#LOC]. | 3885 |
| 5300-0357 | Light bar Federal Signal Vision VSLR60S-NFPA1. Includes (7) LED pods; (5) red (2) multi-color. Location: center cab roof. | 4343 |
| 5300-0358 | Light bars Federal Signal Vision VSLR. One (1) center 21" 3 pod and two (2) side 26.5" 4 pod LED light bars. Lenses to be R/R/C/R R/C/R R/C/R/R. Location: "V" centered on the front cab roof. If equipped with front vista windows rear LED to be shut off. | 6008 |
| 5300-0359 | Light bar Federal Signal Split Vision VSLR6. Two (2) 21" 3-pod light bars w/ (3) blue pods on each bar with blue lenses. Location: [#LOC]. | 3885 |
| 5300-0360 | Light bar Federal Signal Split Vision VSLR6. Two (2) 21" 3-pod light bars w/ (2) red pods and (1) multi-color pod on each bar with R/C/R lenses. Pods 2 and 5 to have rear rotators programmed amber to rear white side and forward. Location: [#LOC]. | 4250 |
| 5300-0361 | Light bar Federal Signal Split Vision VSLR6. Two (2) 21" 3-pod light bars w/ (2) blue pods and (1) multi-color pod on each bar with B/C/B lenses. Pods 2 and 5 to have rear rotators programmed amber to rear white side and forward. Location: [#LOC]. | 4250 |
| 5300-0362 | Light bars Power Arc model VM2502GLP-1P LED (PR). Colors to be RBR RBR. Includes Golight on each bar. Location: [#LOC]. | 5707 |
| 5300-0363 | Whelen Mini-Freedom LED side facing light bars (PR) model FT8RCCRF 28.25" with R/C/C/R lenses and MK8H mounts. Location: [#LOC]. | 4829 |
| 5300-0365 | Light bars Federal Signal Vision VSLR. One (1) center 21" 3 pod and two (2) side 26.5" 4 pod LED light bars. Lenses to be R/C/R/R C/R/C R/R/C/R. Location: "V" centered on the front cab roof. If equipped with front vista windows rear LED to be shut off. | 6008 |
| 5300-0366 | Light bars Federal Signal Vision VSLR. One (1) center 21" 3 pod and two (2) side 26.5" 4 pod LED light bars. Lenses to be R/R/C/R R/R/R R/C/R/R. Location: "V" centered on the front cab roof. If equipped with front vista windows rear LED to be shut off. | 6008 |

| Item No. | Description | |
|---|---|---|
| 5300-0367 | Light bar Whelen Freedom model FN66QLED 66" with MKEZ7 mounts. (10) red and (2) white LED light bar without rear facing LEDs. Location: Centered on the front body mounted to the roof with no upper body or mounted on a bracket in front of the body with 13" upper body. | 5252 |
| 5300-0368 | Light bar Federal Signal JetSolaris 60" LED. Red and blue Solaris reflectors reflectors with center traffic clearing light. NFPA compliant does not require 2 addl side facing bars. Location: Centered on the front cab roof. | 3116 |
| 5300-0369 | Light bar Whelen Freedom model FN72QLED 72" LED with MK8H high mounts and red/clear lenses. Includes (12) red LED and (2) white LED. N/A INTL Chassis. Location: Centered on the front cab roof. | 6235 |
| 5300-0370 | Light bar Federal Signal Split Vision VSLR8S-CFD2. Two (2) 26.5" 4-pod light bars w/driver side (3) red and (1) multi-color pods officer side (2) red (1) green and (1) multi-color pods with red/green/clear lenses. Location: [#LOC]. | 4733 |
| 5300-0371 | Light bar Federal Signal Split Vision VSLR8S-CHI. Two (2) 26.5" 4-pod light bars w/driver side (3) red and (1) multi-color pods officer side (2) red (1) green and (1) multi-color pods with red and clear lenses. Location: [#LOC]. | 4733 |
| 5300-0372 | Light bar Whelen Freedom 72" LED with 3M Opticom and MKEZ7 mounts. Includes (12) red LED and clear lenses. N/A INTL Chassis. Location: Centered on the front cab roof. | 7271 |
| 5300-0373 | Light bar Code 3 model 2758NFPA1CC LED red with clear lenses. Location: Centered on the front cab roof. | 3546 |
| 5300-0374 | Light bar Code 3 LED model 2722NFPA1 (PR) 22" Long. All red with clear lens. Location:[#LOC]. | 4153 |
| 5300-0375 | Light bar Federal Signal Split Vision VSLR8-NFPA4. Two (2) 26.5" 4-pod light bars w/ (2) red and (2) multi-color pods on each bar with clear lenses. Location: [#LOC]. | 5739 |
| 5300-0376 | Light bar Federal Signal Split Vision VSLR6-NFPA1. Two (2) 21" 3-pod light bars w/ (2) red and (1) multi-color pods on each bar with clear lenses. Location: [#LOC]. | 4316 |
| 5300-0379 | Light bar Whelen Freedom model FN72VLED 72" LED with MKEZ7 mounts. Includes (12) red LED and (2) white LED. N/A INTL Chassis. Location: Centered on the front cab roof. | 5775 |
| 5300-0380 | Light bar Federal Signal JetSolaris 60" LED. Blue Solaris reflectors with clear domes. NFPA compliant. Does not require 2 addl side facing bars. Location: Centered on the front cab roof. | 3024 |
| 5300-0381 | Light bar Federal Signal ADX2205 LED with clear lenses(PR). Location: [#LOC] | 6004 |
| 5300-0382 | Light bar Federal Signal Split Vision VSLR8S-CFD2. Two (2) 26.5" 4-pod light bars w/ (3) red with red domes and (1) multi-color pod with clear dome on driver and (2) red with red domes (1) multi-color with clear dome and (1) green with clear dome. Location: [#LOC]. | 5025 |
| 5300-0383 | Light bar Federal Signal JetStream JLX54HH-00011 with all lenses clear 54" LED. Red Solaris reflectors each side and (2) center TCL lights. Location: Centered on the front cab roof. | 3182 |
| 5300-0384 | Light bar Code 3 model XL5000 74" with R/R/R/B lenses. Location: Centered on the front cab roof. | 2227 |
| 5300-0385 | Light bar Whelen Freedom model FN72QLED 72" LED with MKEZ7 mounts. Includes (8) red LED (2) white LED and (2) dual LR11 LED take down lights. N/A INTL Chassis. Location: Centered on the front vista cab roof. | 5464 |
| 5300-0386 | Light bar Code 3 model 21TR 69". Includes: (4) corner mounted red TRS6 LED modules (2) side facing red TRS3 LED modules and (7) forward facing red LED modules R/R/W/R/W/R/R w/clear lenses. Location: Centered on the front cab roof. | 2646 |
| 5300-0387 | Whelen Mini-Freedom LED light bars (PR) model FT8RRRRF 28.25" with MK8H high mounts. Location: [#LOC]. Lense colors: Clear. | 4829 |
| 5300-0388 | Light bar Whelen Freedom model FN72QLED 72" LED with clear lenses and MKEZ7 mounts. Includes (8) red LED and (4) white LED. N/A INTL Chassis. Location: Centered on the front cab roof. | 5301 |
| 5300-0389 | Light bar Whelen Freedom model FN66QLED 66" with MK8H high mounts. All LED light bar without rear facing LEDs. Location: Centered on the front cab roof. | 4383 |
| 5300-0390 | Light bar Whelen Freedom model FN72QLED 72" LED with MK8 high mounts. Includes (8) red LED (2) blue LED and (2) white LED. N/A INTL Chassis. Location: Centered on the front cab roof. | 5062 |
| 5300-0391 | Light bar Federal Signal Split Vision VSLR8. Two (2) 26.5" 4-pod light bars. Driver w/ (2) red and (2) multi-color pods with clear lenses; officer w/ (3) red and (1) multi-color pods with clear lenses. Location: [#LOC]. | 5739 |
| 5300-0393 | Light bar Whelen Freedom model FN72VLED 72" LED with MKEZ7 mounts. Includes (10) red LED and (2) white LED. N/A INTL Chassis. Location: Centered on the front cab roof. | 5149 |
| 5300-0394 | Light bar Whelen Freedom model FN88QLED 88" LED with MKEZ7 mounts and clear lenses. Includes (12) red and (4) white LEDs. N/A commercial Chassis. Location: Centered on the front cab roof | 6840 |
| 5300-0395 | Whelen Mini-Freedom Rota-Beam LED light bars (PR) 24" with clear lenses and MKEZ7 mounts. Location: [#LOC]. | 6514 |
| 5300-0396 | Light bar Whelen Freedom 72" LED with MK8 high mounts and clear lenses. Includes (5) red Rota-Beam LED (4) red LED and (4) white LED. N/A INTL Chassis. Location: Centered on the front cab roof. | 6853 |
| 5300-0397 | Light bar Whelen Freedom model FN72QLED 72" LED with MKEZ7 mounts. Includes (10) red LED and (2) white LED. N/A INTL Chassis. Location: Centered on the front cab roof. | 5364 |

| Item No. | Description | |
|---|---|---|
| 5300-0399 | Light bar Whelen Freedom model FN72QLED 72" LED with GTT Opticom clear lenses and MKEZ7 mounts. Includes (6) red LED (2) blue LED and (2) white LED. N/A INTL Chassis. Location: Centered on the front cab roof. | 7336 |
| 5300-0400 | Light bar Whelen Freedom model FN72QLED 72" LED with GTT Opticom red lenses and MKEZ7 mounts. N/A INTL Chassis. Location: Centered on the front cab roof. | 7181 |
| 5300-0401 | Light bar Whelen Freedom 72" LED with MKEZ7 mounts and clear lenses. Includes (6) Rota-Beam LED (4-red 2-white) (2) green LED (2) red LED (2) dual LR11 alley lights (2) LR11 take down lights and GTT 795H Opticom. N/A INTL Chassis. Location: Centered on the front cab roof. | 7890 |
| 5300-0403 | Whelen Mini-Freedom Rota-Beam LED light bars (PR) 28.25" with R/C/R lenses (2) red and (1) white Rota-Beam LED lights and MK8H high mounts. Location: [#LOC]. | 6270 |
| 5300-0404 | Light bar Whelen Freedom 72" LED with MK8 high mounts and red / clear lenses. Includes (6) red Rota-Beam LED (1) white Rota-Beam LED and (4) red LED. N/A INTL Chassis. Location: Centered on the front cab roof. | 6381 |
| 5300-0405 | Whelen Mini-Freedom LED light bar package with MKEZ7 mounts. (1) model FT8RCCRF centered on front cab roof (1) FT8RRRRF each side front cab corner at 30 degree angle. Lense colors: Clear. | 6196 |
| 5300-0406 | Light bar Whelen Freedom 72" LED with MK8H high mounts and clear lenses. Includes (6) red Rota-Beam LED (1) white Rota-Beam LED (2) red LED and (2) white LED. N/A INTL Chassis. Location: Centered on the front cab roof. | 6650 |
| 5300-0407 | Light bar Whelen Freedom 60" LED with MK8 high mounts and clear lenses. Includes (6) red Rota-Beam LED (1) white Rota-Beam LED and (2) white LED. N/A INTL Chassis. Location: Centered on the front cab roof. | 6108 |
| 5300-0408 | Light bar Federal Signal Legend 53" LED with clear lenses and red diodes. Location: Centered on the front cab roof | 3506 |
| 5300-0409 | Light bar Whelen Freedom model FN55QLED 55" LED with MKEZ7 mounts. Location: Centered on the front cab roof. | 3682 |
| 5300-0410 | Light bar Federal Signal JetSolaris 60" LED. Red Solaris reflectors with red domes. NFPA compliant. Does not require 2 addl side facing bars. Location: Centered on the front cab roof. | 3024 |
| 5300-0411 | Light bar Whelen Freedom model FN82QLED 82" LED with clear lenses Opticom and MKEZ7 mounts. Includes (12) red LED and (2) white LED. N/A INTL Chassis. Location: Centered on the front cab roof. | 7274 |
| 5300-0412 | Light bar Federal Signal Legend 70" LED with red/white diodes and clear lenses. Location: Centered on the front cab roof. | 4608 |
| 5300-0413 | Light bar Federal Signal Navigator model NVG73-EONE 73" with (10) red and (2) white Quadraflare LED lights. Location: Centered on the front cab roof. | 3747 |
| 5300-0414 | Light bar Federal Signal Legend. (2) 24" light bars LED. Lenses color: clear. (1) Model number LGD24Z-2655171 and (1) model number LGD24Z-2655292. Location: [#LOC]. | 2365 |
| 5300-0415 | Light bar Federal Signal Navigator model NVG73-NFPA3 73" with (2) red SLR rotators (2) red / white SLR rotators and (4) red Quadraflare LED lights. Location: Centered on the front cab roof. | 4179 |
| 5300-0416 | Whelen Mini-Freedom Rota-Beam LED light bars (PR) 24" with clear lenses and MK8H high mounts. Location: [#LOC]. | 6575 |
| 5300-0417 | Light bar Whelen Freedom 72" LED with MKEZ7 mounts and clear lenses. Includes (5) red Rota-Beam LED and (2) white Rota-Beam LED. N/A INTL Chassis. Location: Centered on the front cab roof. | 5509 |
| 5300-0418 | Whelen Ultra Freedom Micro Edge LED (PR) model MCFLED25 clear lens with red LEDs. Location [#LOC]. When used at front cab corners requires additional lighting to meet NFPA. | 2209 |
| 5300-0419 | Whelen Mini-Freedom LED light bars (PR) model FNMINI 24" with clear lenses and low profile MK9 mounts. Location: [#LOC]. | 5022 |
| 5300-0421 | Light bar Whelen Freedom 72" LED with MKEZ7 mounts and clear lenses. Includes (8) red Rota-Beam LED and GTT 795H Opticom. N/A INTL Chassis. Location: Centered on the front cab roof. | 7433 |
| 5300-0422 | Light bar Whelen Freedom model FN72VLED 72" LED with 795H Opticom and MKEZ7 mounts. Includes (6) red LED (4) blue LED and (2) white LED. N/A INTL Chassis. Location: Centered on the front cab roof. | 8423 |
| 5300-0423 | Light bar Whelen Freedom model FN66VLED 66" with dual LR11 alley lights dual LR11 takedown lights and MKEZ7 mounts. All LED light bar. Location: Centered on the front cab roof | 4740 |
| 5300-0424 | Light bar Whelen Freedom 72" LED with MKEZ7 mounts and red/clear lenses. Includes (8) red Rota-Beam LED and GTT 795H Opticom. N/A INTL Chassis. Location: Centered on the front cab roof. | 7433 |
| 5300-0427 | Light bar Whelen Freedom model FN55VLED 55" LED with PE215 emitter (4) red driver LED (4) blue officer LED and MKEZ7 mounts and clear lenses. N/A with Vista roofs with front facing windows. Location: Centered on the front cab roof. | 4710 |
| 5300-0428 | Light bar Whelen Freedom model FN66QLED 66" with MKEZ7 mounts. Red/blue/clear LED light bar without rear facing LEDs. Location: Centered on the front cab roof. | 4330 |
| 5300-0429 | Light bar Whelen Freedom model FN72QLED 72" LED red/blue with MKEZ7 mounts and red/clear/blue lenses. N/A INTL Chassis. Location: Centered on the front cab roof | 4440 |
| 5300-0430 | Light bar Power Arc model LED VM6004-3P 60" long. Lenses color: R/R/R/W/R/R/R Location: center front cab roof. | 3929 |

| Item No. | Description | |
|---|---|---|
| 5300-0431 | Light bar Federal Signal Navigator model NVG25-NFPA3 LED (PR). Includes (3) QL64 red and (2) QL73 red in each bar with clear lenses. Location: [#LOC] | 3886 |
| 5300-0432 | Light bar Federal Signal Navigator model NVG25 (PR). Includes (3) QL64 red and (2) QL73 red in each bar with red lenses. Location: [#LOC] | 3886 |
| 5300-0433 | Light bar Federal Signal Navigator model NVG25-0001 (PR). Includes (2) SLR rotators red/white and (1) QL64 red in each bar with clear lenses. Location: [#LOC] | 3818 |
| 5300-0436 | Light bar Federal Signal LPX70DS-NFPA1 70" LED with red and clear lenses. Location: Centered on the front cab roof | 2441 |
| 5300-0438 | Light bar Federal Signal Navigator model NVG73-NFPA7 73" with (12) red Quadraflare LED lights. Location: Centered on the front cab roof. | 4329 |
| 5300-0441 | Light bar Whelen Freedom model FN88VLED 88" LED with MKEZ7 mounts and clear lenses. Includes (10) red (6) white LEDs and (2) dual LR11 alley lights. N/A commercial Chassis. Location: Centered on the front cab roof | 7134 |
| 5300-0442 | Light bar Whelen Freedom model FN72VLED 72" LED with 795H Opticom and MKEZ7 mounts. Includes (8) red LED and (4) blue LED. N/A INTL Chassis. Location: Centered on the front cab roof. | 8423 |
| 5300-0443 | Light bar Federal Signal Navigator model NVG25-NFPA-D & -P LED (PR). Includes (2) QL64 red (1) QL64 split red/white and (1) QL73 red in each bar with clear lenses. Location: [#LOC] | 3886 |
| 5300-0444 | Light bar Federal Signal Navigator model NVG73-FLNDRS 73" with (2) red SLR rotators (2) red/white SLR rotators (2) red/white Quadraflare LED and (2) blue Quadraflare LED lights. Location: Centered on the front cab roof. | 4757 |
| 5300-0445 | Federal JLX7250-NFPA LED Light bar 72". Includes (8) red 6-LED reflectors (3) white 6-LED reflectors and (6) red 3-LED reflectors. The lenses shall be clear. No rear lighting. | 4948 |
| 5300-0447 | Light bar Federal Signal LPX 53" LED with red/clear/blue lenses red diodes outer driver clear diodes center and blue diodes outer officer. Location: Centered on the front cab roof | 2125 |
| 5300-0448 | Light bar Whelen Freedom model FN72VLED 72" LED with MK8H high mounts. Includes (11) red LED (2) white LED and (1) green LED. N/A INTL Chassis. Location: Centered on the front cab roof. | 5583 |
| 5300-0449 | Light bar Whelen Freedom model FN72QLED 72" LED with 3M Opticom clear lenses (4) red LEDs' (2) blue LEDs' (2) clear LEDs' and MKEZ7 mounts. N/A INTL Chassis. Location: Centered on the front cab roof. | 7181 |
| 5300-0450 | Light bar Whelen Freedom model FN72VLED 72" LED with Opticom and MKEZ7 mounts. Includes (10) red LED (2) blue LED and (2) white LED. N/A INTL Chassis. Location: Centered on the front cab roof. | 7600 |
| 5300-0451 | Light bar Power Arc model LED VM8504GLP-6P 85" long. Lenses color: R/R/B/R/W/W/R/B/R/R. Includes (2) Go-Lights with controls. Location: center front cab roof. | 7218 |
| 5300-0453 | Light bar Whelen Freedom model FN72VLED 72" LED with MKEZ7 mounts and clear lenses. Includes (10) red LED (2) white LED (2) dual LR11 alley lights and (2) dual LR11 takedown lights. N/A INTL Chassis. Location: Centered on the front cab roof. | 5814 |
| 5300-0454 | Whelen Mini-Freedom LED light bars (PR) model FNMINI 24" with red/clear lenses driver blue/clear lenses officer and MK9 low mounts. Location: [#LOC]. | 5022 |
| 5300-0455 | Whelen Mini-Freedom Rota-Beam LED light bars (PR) 24" with clear lenses and MKEZ7 mounts. Location: [#LOC]. | 6514 |
| 5300-0456 | Light bar Whelen Justice 56" LED with clear lenses and MKEZ7 mounts. N/A on Vista roofs with front facing windows. Includes (4) corner facing LIN6 LED lights (red driver blue officer) (6) forward facing CON3 Linear LED lights; (3) red driver and (3) blue officer. Location: Centered on the front cab roof. | 2650 |
| 5300-0459 | Light bar Whelen Freedom model FN72VLED 72" LED with MKEZ7 mounts and PE215 emitter. Includes (8) red LED and (4) blue LED. N/A INTL Chassis. Location: Centered on the front cab roof. | 6169 |
| 5300-0460 | Tomar Scorpion model 970L-2603-0101 LED all red with rear blank NFPA light bars (PR). Location: [#LOC]. | 4165 |
| 5300-0461 | Light bar Whelen Freedom model FN72QLED 72" LED with MK8 high mounts and red/clear lenses. Includes (10) red LED and (4) white LED. N/A INTL Chassis. Location: Centered on the front cab roof. | 6241 |
| 5300-0462 | Light bar Federal Signal Split Vision VSLR6S-CHI3. Two (2) 21" 3-pod light bars w/ (1) red pod (1) multi-color pod and (1) blue pod on each bar with clear lenses. Location: [#LOC]. | 3951 |
| 5300-0463 | Wire light bars using Deutsch connectors on exterior for maintenance/replacement. | 194 |
| 5300-0464 | Whelen Mini-Freedom LED light bar model FNMINI 28.25" with Opticom MKEZ7 mounts and clear lenses. Location: center front of cab. Requires additional forward facing lightbars. | 3531 |
| 5300-0465 | Light bar Whelen Freedom model FN55QLED 55" LED with takedown lights MKEZ7 mounts and red lenses. Location: Centered on the front cab roof. | 4250 |
| 5300-0466 | Light bar Whelen Freedom 60" LED with MKEZ7 mounts and clear lenses. Includes (6) red Rota-Beam LED and (2) white Rota-Beam LED. Location: Centered on the front cab roof. | 6227 |
| 5300-0467 | Whelen Mini-Freedom Rota-Beam LED light bars (PR) 28.25" with clear lenses (1) red (1) white and (1) blue Rota-Beam LED lights with MKEZ7 mounts. Location: [#LOC]. | 6219 |
| 5300-0468 | Light bar Whelen Freedom 82" LED with MKEZ7 mounts and clear lenses. Includes (8) Rota-Beam LED (6-red 2-white) (2) red LED and GTT 795H Opticom. N/A INTL Chassis. Location: Centered on the front cab roof. | 8571 |

| Item No. | Description | |
|---|---|---|
| 5300-0469 | Light bar Federal Signal Navigator model NVG73-NFPA6 73" with (12) red Quadraflare LED lights and clear lenses. Location: Centered on the front cab roof. | 4329 |
| 5300-0470 | Light bar Whelen Freedom model FN55QLED 55" LED with (6) red LED (6) white LED and MKEZ7 mounts. Location: Centered on the front cab roof. | 4350 |
| 5300-0472 | Light bar Whelen Freedom model FN88QLED 88" LED with MKEZ7 mounts and clear lenses. Includes (12) red and (4) white LEDs. N/A commercial Chassis. Includes (1) forward facing red steady burn for California DOT. Location: Centered on the front cab roof | 6840 |
| 5300-0473 | Whelen F4 Mini-Freedom LED light bars (PR) 21.5" with MKEZ7 mounts. Red and white LEDs with clear lense. Location: [#LOC]. | 5022 |
| 5300-0474 | Light bar Federal Signal Split Vision VSLR6. Two (2) 21" 3-pod light bars w/ (2) red pods and (1) multi-color pod on each bar with red/clear lenses. Location: [#LOC]. | 3885 |
| 5300-0476 | Light bar Federal Signal Legend. (2) 24" light bars red LED side facing only. Lenses color: clear. Location: [#LOC]. | 2748 |
| 5300-0477 | Light bar Federal Signal Navigatorl NVG25 LED (PR). Includes (2) QL64 red (1) QL64 white and (2) QL73 red in each bar with clear lenses. Location: [#LOC] | 3946 |
| 5300-0478 | Light bar Federal Signal Navigator model NVG87 87" with (8) red and (6) red/white Quadraflare LED lights. Location: Centered on the front cab roof. | 5057 |
| 5300-0479 | Light bar Whelen Justice 56" LED with clear lenses and MKEZ7 mounts. N/A on Vista roofs with front facing windows. Includes (4) corner facing red LIN6 LED lights (6) forward facing CON3 Linear LED lights; (2) red (2) clear and (2) blue. Location: Centered on the front cab roof. | 2650 |
| 5300-0480 | Light bar Whelen Freedom model FN72VLED 72" LED with MKEZ7 mounts. Includes (10) red LED (4) blue and (2) white LED. N/A INTL Chassis. Location: Centered on the front cab roof. | 6075 |
| 5300-0481 | Light bar Code 3 model RMX91-ALRC-100. Upper deck contains (9) R-12 LED modules left and right alley lights. Lower deck contains (2) red R-12 steady burn LED modules (4) R-12 red LED modules (4) takedown lights and 795 emitter. Location: Centered on the front cab roof. | 6573 |
| 5300-0482 | Light bar Federal Signal Legend 70" LED with red/white/blue diodes and clear lenses. Location: Centered on the front cab roof. | 2291 |
| 5300-0484 | Light bar Federal Signal Split Vision VSLR8S. Two (2) 26.5" 4-pod light bars w/ (2) red (1) blue and (1) multi-color pods with clear lenses. Location: [#LOC]. | 4733 |
| 5300-0485 | Whelen Mini-Freedom LED light bars (PR) model FNMINI 24" with clear lenses (1) officer side blue LED and MKEZ7 mounts. Location: [#LOC]. | 5022 |
| 5300-0486 | Light bar Federal Signal JetStream 60'' LED. Red Solaris reflectors and 3M 792 Opticom. Red domes each side with clear center. Location: Centered on the front cab roof | 5305 |
| 5300-0487 | Light bar Whelen Freedom model F4X7 60" LED with clear lenses and MKEZ7 mounts. Includes (10) red LED (4) white LED and side facing TIR6 alley lights. N/A INTL Chassis. Location: Centered on the front cab roof. | 6032 |
| 5300-0488 | Whelen Mini-Freedom Rota-Beam LED light bars (PR) 24" with Amber LED with clear lenses and MKEZ7 mounts. Location: [#LOC]. | 6514 |
| 5300-0489 | Light bar Whelen Freedom IV Model F4N7QLED 72" LED with MKEZ7 mounts. (6) Red and (2) white LEDs with clear lense and no rear facing LEDs. Location: Centered on the front cab roof. | 4440 |
| 5300-0490 | Light bar Whelen Freedom IV 60" LED with MKEZ7 mounts. Red and white LEDs with clear lense and no rear facing LEDs. Location: Centered on the front cab roof. | 4330 |
| 5300-0491 | Whelen F4 Mini-Freedom LED light bars (PR) 21.5" with MKEZ7 mounts. Red and white LEDs clear lenses and red filters. Location: [#LOC]. | 5022 |
| 5300-0492 | Whelen F4 Mini-Freedom LED side facing light bars (PR) 21.5" with MKEZ7 mounts. Red LEDs with clear lense. Location: [#LOC]. | 4278 |
| 5300-0493 | Light bar Whelen Freedom IV Model F4N7QLED 72" LED with MKEZ7 mounts. (8) Red and (2) white LEDs with clear lense and no rear facing LEDs. Location: Centered on the front cab roof. | 4935 |
| 5300-0494 | Light bar Whelen Freedom IV Model F4N7QLED 72" LED with MKEZ7 mounts. (6) Red w/ filters and (2) white LEDs with clear lenses and no rear facing LEDs. Location: Centered on the front cab roof. | 4570 |
| 5300-0495 | GTT 795H Opticom centered in forward facing Whelen Freedom IV light bar. | 2139 |
| 5300-0496 | Light bar Whelen Freedom model F4N7VLED 72" LED with MKEZ7 mounts. (6) Red and (2) white LEDs with clear lense. N/A INTL Chassis or Vista roofs with front facing windows. Location: Centered on the front cab roof. | 4440 |
| 5300-0497 | Whelen F4 Mini-Freedom LED light bars (PR) 21.5" with MK9 mounts. Red and white LEDs clear lenses and red filters. Location: [#LOC]. | 5022 |
| 5300-0500 | Whelen F4 Mini-Freedom LED light bars (PR) 21.5" with MKEZ7 mounts. Red and white driver LEDs; blue and white officer LEDs' with clear lenses and red/blue filters. Location: [#LOC]. | 5022 |
| 5300-0501 | Whelen F4 Mini-Freedom LED side facing light bars (PR) 21.5" with MKEZ7 mounts. Red and blue LEDs with clear lenses. Location: [#LOC]. | 4278 |
| 5300-0502 | Light bar Whelen Freedom IV Model F4N7QLED 72" LED with MKEZ7 mounts. (4) Red (4) Blue and (2) white LEDs with clear lenses and no rear facing LEDs. Location: Centered on the front cab roof. | 4935 |
| 5300-0503 | Whelen MK9S short slide bolt bracket mount for front light bar (PR). | 69 |
| 5300-0504 | Whelen MKEZ7 1.5" standard mount for front light bar (PR). | 55 |
| 5300-0505 | Whelen MK8H 5" high mount for front light bar (PR). | 137 |

| Item No. | Description | |
|---|---|---|
| 5300-0507 | Light bar Whelen Freedom IV Model F4X7 72" with 14 LED modules. Location: Centered on the front cab roof. | 6105 |
| 5300-0508 | Whelen Mini-Freedom IV side facing light bars (PR) 21.5" with 4 LED modules. Location: [#LOC]. | 4223 |
| 5300-0509 | Light bar Whelen Freedom IV Model F4X7 72" with 12 LED modules. Location: Centered on the front cab roof. | 5527 |
| 5300-0510 | Light bar Whelen Freedom IV Model F4X7 72" with 10 LED modules. Location: Centered on the front cab roof. | 4880 |
| 5300-0511 | Light bar Whelen Freedom IV Model F4X7 72" with 8 LED modules. Location: Centered on the front cab roof. | 4386 |
| 5300-0512 | Light bar layout per customer specific requirements. | 278 |
| 5300-0513 | Colored filters for Whelen Freedom IV light bar. | 86 |
| 5300-0514 | Whelen MK9S short slide bolt bracket mount for mini front light bars (2) pair. | 139 |
| 5300-0515 | Whelen MKEZ7 1.5" standard mount for mini front light bars (2) pair. | 109 |
| 5300-0517 | Whelen MK9S short slide bolt bracket mount for mini side facing light bars (2) pair. | 139 |
| 5300-0518 | Whelen MKEZ7 1.5" standard mount for mini side facing light bars (2) pair. | 109 |
| 5300-0519 | Whelen MK8H 5" high mount for mini side facing light bars (2) pair. | 273 |
| 5300-0522 | Light bar Whelen Freedom IV Model F4X0 60" with 8 LED modules. Location: Centered on the front cab roof. | 4386 |
| 5300-0524 | Whelen F4 Mini-Freedom LED light bars (PR) 21.5" with 5 LEDs in each bar. Location: [#LOC]. | 4913 |
| 5300-0525 | Whelen TIR6 takedown lights for Freedom IV lightbar (PR). | 560 |
| 5300-0526 | Whelen F4 Mini-Freedom LED light bars (3) 21.5" with 5 LEDs' in each outer bar 4 LED's in center bar Location: Center front of cab roof and front cab corners at 45 degree angle. | 7025 |
| 5300-0527 | Light bar Federal Signal Navigator NVG25 LED (PR) side facing. Includes (3) QL64 red/white in each bar with clear lenses. Location: [#LOC] | 3227 |
| 5300-0528 | Light bar Federal Signal Navigator model NVG73 73" with (10) split red/white Quadraflare LED lights and (2) red Quadraflare LED lights. Location: Centered on the front cab roof. | 4405 |
| 5300-0529 | Light bar Whelen Freedom IV Model F4X0 55" with 8 LED modules. Location: Centered on the front cab roof. | 3694 |
| 5300-0530 | Light bar Federal Signal Navigator NVG25 LED side facing (PR). Includes (1) QL73 red (1) QL64 red/white and (1) red LED rotator in each bar with clear lenses. Location: [#LOC]. | 3213 |
| 5300-0531 | Light bar Federal Signal Navigator NVG25 LED (PR). Includes (2) QL64 red (2) QL64 red/white and (1) red/white LED rotator in each bar with clear lenses. Location: [#LOC]. | 4014 |
| 5300-0533 | Light bar package Whelen 4500 LED (3) bar package. Includes: (1) 40'' LED front bar w/ Opticom and (2) diagonal 24'' LED bars. | 10001 |
| 5300-0534 | Light bar Federal Signal Navigator model NVG87 87" with (10) red and (4) red/white Quadraflare LED lights. Center red/white LEDs' to flash in an "X" pattern. Location: Centered on the front cab roof. | 5057 |
| 5300-0535 | Light bar Federal Signal Navigator NVG25 LED (PR). Includes (2) QL64 red (1) QL64 split red/white and (2) QL73 red in each bar with clear lenses. Location: [#LOC] | 3946 |
| 5300-0536 | Light bar Whelen Freedom IV Model F4R7 72" with 9 Rotabeam and 4 LED modules. Location: Centered on the front cab roof. | 7830 |
| 5300-0537 | Light bar Whelen Freedom IV Model F4X1 81" with 14 LED modules. Location: Centered on the front cab roof. | 6114 |
| 5300-0538 | Steady burn additional red LED module forward facing in officer side of Whelen light bar to meet California DOT. | 273 |
| 5300-0539 | Steady burn additional green LED module forward facing in officer side of Whelen light bar. | 302 |
| 5300-0540 | Light bar Whelen Freedom IV Model F4X0 60" with 14 LED modules. Location: Centered on the front cab roof. | 6114 |
| 5300-0541 | Whelen TIR6 alley lights for Freedom IV lightbar (PR). | 560 |
| 5300-0542 | Light bar Federal Signal Navigator model NVG18 LED (PR). Includes (2) QL64 split red/white and (1) QL73 red in each bar with clear lenses. Location: [#LOC] | 3092 |
| 5300-0543 | Light bar Federal Signal Navigator model NVG25-0001 (PR). Includes (2) SLR red/white rotators and (1) red QL64 in each bar with clear lenses. Location: [#LOC] | 3998 |
| 5300-0548 | 2" standard mount for front Federal Navigator light bar (PR). | 79 |
| 5300-0554 | Light bar Whelen Freedom IV Model F4X1 81" with 16 LED modules. Location: Centered on the front cab roof. | 6703 |
| 5300-0555 | Light bar Whelen Mini-Freedom IV side facing model F4RB 23" with 3 Rotabeams (PR). Location: [#LOC]. | 6452 |
| 5300-0556 | Light bar Whelen Freedom IV Model F4X7 72" with 18 LED modules. Location: Centered on the front cab roof. Requires no forward vista windows or flat roof only. | 7104 |
| 5300-0557 | Light bar Whelen Freedom IV Model F4X1 81" with 18 LED modules. Location: Centered on the front cab roof. | 7290 |
| 5300-0558 | GTT 795H Opticom in forward facing Federal Signal Navigator light bar. | 1643 |
| 5300-0559 | Light bar Whelen Freedom IV Model F4 56" with 6 Rotabeam modules. Location: Centered on the front cab roof. | 5394 |

| Item No. | Description | |
|---|---|---|
| 5300-0560 | Light bar Whelen Freedom IV Model F4R0 60" with 6 Rotabeam and 2 LED modules. Location: Centered on the front cab roof. | 5916 |
| 5300-0561 | Light bar Whelen Freedom IV Model F4X1 92" with 16 LED modules. Location: Centered on the front cab roof. | 6836 |
| 5300-0562 | Light bar Federal Signal JetSolaris 60" LED. Red Solaris reflectors with clear domes. Includes LED takedowns and LED alley lights. NFPA compliant. Does not require 2 addl side facing bars. Location: Centered on the front cab roof. | 3024 |
| 5300-0563 | Light bar Whelen Mini-Freedom IV model F4RB 23" with 2 Rotabeams and 2 LED modules (PR). Location: [#LOC]. | 6587 |
| 5300-0564 | Light bar Power Arc model LED VM8504QE15-6P 90" long. Includes (2) FRC Evolutions LED flood lights. LED color: split R/B R/B/R/W/W/R/B/R split R/B with clear lenses. Location: center front cab roof. | 9684 |
| 5300-0565 | Light bar Whelen Freedom IV Model F4X7 72" with 16 LED modules. Location: Centered on the front cab roof. | 6517 |
| 5300-0566 | Light bar Whelen Freedom IV Model F4R0 60" with 6 Rotabeam and 8 LED modules. Location: Centered on the front cab roof. Includes rear facing Rotabeam and LED modules. | 7867 |
| 5300-0567 | Light bar Whelen Freedom IV Model F4R7 72" with 6 Rotabeam and 4 LED modules. Location: Centered on the front cab roof. | 6386 |
| 5300-0568 | Light bar Code 3 LED model 21TR22 (PR) 22" Long. All red with clear lens. Location: [#LOC] | 2399 |
| 5300-0569 | Light bar Code 3 model 21TRPL52 LED red/clear with clear lenses. Location: Centered on the front cab roof. | 1901 |
| 5310-0000 | Light bar Federal Signal Signal Master SML6. Location:  installed at the rear of the apparatus. | 1002 |
| 5310-0001 | Light bar Federal Signal Signal Master SML8. | 1101 |
| 5310-0002 | Light bar Federal Signal Signal Master SMLED6. | 1708 |
| 5310-0003 | Light bar Federal Signal Signal Master SMLED8. | 1805 |
| 5310-0005 | Whelen Traffic Advisor Model TA837A - 43.25" long. | 1246 |
| 5310-0006 | Whelen Traffic Advisor Model TA870A - 62" long. | 1953 |
| 5310-0010 | Light bar Federal Signal Signal Master SML430 19.5" long (PR). Mounted each side rear of body. | 1158 |
| 5310-0011 | Light bar CODE 3 model AS10S Arrowstik 47" long. Mounted center rear body. | 1441 |
| 5310-0012 | Diamond plate shield over rear directional light. | 358 |
| 5310-0014 | Light bar CODE 3 model AS839 Arrowstik 39" long. Lenses to be amber with red on the ends. Mounted center rear body. | 1177 |
| 5310-0015 | Light bar CODE 3 model NASL839 LEDX Narrowstik 40.5" long. Lights heads are amber with red on the ends. Mounted center rear body. | 2097 |
| 5310-0017 | Whelen Traffic Advisor model TAL65 LED - 36" long. | 1545 |
| 5310-0018 | Whelen Traffic Advisor Model TAM65 LED - 36" long. | 1997 |
| 5310-0019 | Light bar Code 3 model NASL847 LED Narrowstik 47" long. Mounted on rear of body. | 2094 |
| 5310-0021 | Light bar CODE 3 model NASL839 LEDX Narrowstik 40.5 inches long. Mounted center rear body. | 2097 |
| 5310-0023 | Light bar CODE 3 model NASL630 LEDX Narrowstik 30.5 inches long. | 1881 |
| 5310-0025 | Directional light circuit wiring through upper level warning. | 88 |
| 5310-0027 | Whelen Traffic Advisor Model TAM85 LED - 47" long. | 2794 |
| 5310-0028 | Whelen Traffic Advisor Model TAM83 LED - 31" long. | 2046 |
| 5310-0029 | Smooth plate shield painted job color over rear directional light. | 620 |
| 5310-0030 | Whelen Traffic Advisor Model TA870L LED- 62" long. | 4006 |
| 5310-0031 | Whelen Traffic Advisor model TA-4437M LED split (2) 22.75" long.  Locate one each side on rear panel of body. | 2339 |
| 5310-0034 | Whelen Traffic Advisor Model TA870L SPL 48" long (PR) with (6) 700 series Super LED amber modules. Location: (1) each side facing on forward compartment tops. Control located officers side of center overhead. | 6421 |
| 5310-0035 | Whelen Traffic Advisor Model TAL85 LED - 47" long. | 1945 |
| 5310-0042 | Whelen Traffic Advisor Model TAZ86 LED - 31" long. | 2570 |
| 5310-0043 | Whelen Traffic Advisor Model TANF65 LED - 34" long. | 1966 |
| 5310-0044 | Light bar Federal Signal Signal Master Viper EXT LED 42" with 8 lights. | 2044 |
| 5310-0045 | Light bar Federal Signal Signal Master Viper EXT LED 31" with 6 lights. | 1806 |
| 5310-0046 | Whelen Traffic Advisor Model TANF85 LED - 45" long. | 2428 |
| 5310-0051 | Whelen Traffic Advisor Model TA870L - 72" long LED. Includes TACTLD1 controller. | 2093 |
| 5310-0053 | Whelen Traffic Advisor model TA-4437M LED split (2) 22.75" long. Locate one each side on rear upper body extrusion above B2 and B3. | 2339 |
| 5310-0054 | Light bar Federal Signal Signal Master Plus SMLED-PLS-6. | 1524 |
| 5310-0055 | Light bar Federal Signal Master Viper EXT LED 31" with 6 lights with clear lenses. | 1806 |
| 5310-0056 | Whelen Traffic Advisor model TAL65 LED - 36" long. Locate surface mounted on driver and officer side of body up high approx. centered. | 1545 |
| 5310-0057 | Whelen traffic advisor. Includes (8) IONSV3AC amber individual lights on 12" centers and control head. Location: side facing driver and officer side of body. | 3710 |
| 5310-0058 | Whelen Traffic Advisor Model TADP8 LED - 30" long. Includes TADCTL1 controller. | 2440 |
| 5310-0059 | Whelen Traffic Advisor Model TAD8 LED - 30" long. Includes TADCTL1 controller. | 2065 |

| Item No. | Description | |
|---|---|---|
| 5310-0060 | Whelen Traffic Advisor Model TAZ66 LED - 23.25" long. | 2064 |
| 5310-0061 | Brushed stainless steel shield over rear directional light. | 413 |
| 5310-0062 | Light bar Tomar model LSTICK13W6 24.5" long with amber light heads. | 1453 |
| 5310-0063 | Federal Signal Viper EXT Model VPX800-2 LED w/ bezel (PR). Surfaced mounted with clear lens wired through ignition. Location: above rear ladder tunnel door. | 624 |
| 5310-0064 | Whelen Traffic Advisor Model TAM63 LED - 24" long. | 1891 |
| 5310-0065 | Light bar Tomar model LSTICK13W6 24.5" long with amber light heads. | 1453 |
| 5310-0066 | Whelen Traffic Advisor Model TAM8348 LED - 48" long. | 2205 |
| 5310-0068 | Whelen Traffic Advisor Model TAD8RB LED - 30" long. Includes red driver and blue officer warning with TADCTL1 controller. | 2065 |
| 5310-0070 | Whelen Traffic Advisor model TAL65 LED with clear lenses - 36" long. | 1545 |
| 5310-0071 | Whelen Traffic Advisor model TADF6 LED - 37" long. Warning to be R/R/R/B/B/B. | 2898 |
| 5310-0072 | Light bar PowerArc model P14PSK LED with 5 lights. Center to be red/yellow. Red to override with application of brakes. Driver and officer upper two amber to override with individual turn signals. | 3665 |
| 5350-0000 | Camera backup Intec with monochrome monitor. | 5161 |
| 5350-0001 | Camera back-up Safety Vision LCD model SV-CLCD70BA-625B with audio. For use with up to 2 cameras. | 2329 |
| 5350-0025 | Back up camera for Vehicle Information Control Center. Video displays automatically when transmission is in reverse. | 785 |
| 5350-0026 | Side facing camera mtd up high on officer side of the cab centrally located (above canopy window if applicable) interlocked with right turn signal. Displays video on vehicle information control center. | 785 |
| 5350-0027 | Side facing camera mtd up high on driver side of the cab centrally located (above canopy window if applicable) interlocked with left turn signal. Displays video on vehicle information control center. | 785 |
| 5350-0028 | Forward facing camera mounted (approximately) center of cab. | 785 |
| 5350-0048 | Setcom intercom system with (6) cab jacks and (1) pump panel jack. Custom cabs only. Headsets to be shipped loose. | 10207 |
| 5350-0054 | Safety Vision officer's side camera. Requires Safety Vision back-up camera option. SV-620 Kit w/ SV-523. Camera to be located on officer's side mirror. | 1020 |
| 5350-0060 | Diamond plate camera shield. | 239 |
| 5350-0061 | Safety Vision driver's side camera. Requires Safety Vision back-up camera option. SV-620 Kit w/ SV-523. Camera to be located on driver's side mirror. | 1020 |
| 5350-0070 | Voyager back-up camera. Video displays automatically when transmission is in reverse. Camera only - does not include monitor. | 793 |
| 5350-0071 | Voyager side mtd rear facing camera positioned up high on officer side of the cab centrally located (above canopy window if applicable) interlocked with right turn signal. Camera only - does not include monitor. | 772 |
| 5350-0072 | Voyager side mtd rear facing camera positioned up high on driver side of the cab centrally located (above canopy window if applicable) interlocked with left turn signal. Camera only - does not include monitor. | 772 |
| 5350-0073 | Voyager forward facing camera mounted upper center area of cab. | 726 |
| 5350-0074 | Sigtronics US-45S intercom system with (4) cab jacks (1) pump panel jack four headsets / hooks PTT switches for driver / ppnl. Does not include radio interface cable. Custom cabs only. Headsets to be shipped loose. | 4863 |
| 5350-0076 | David Clark model 3800 intercom system with (5) cab head sets. Headsets to be shipped loose. | 7982 |
| 5350-0078 | Smooth plate camera shield painted job color (match the "two tone" sale code color if two tone applies). | 370 |
| 5350-0079 | Sigtronics US-45D intercom system with (3) cab jacks (1) pump panel jack three headsets / hooks PTT switches for driver/officer/ppnl. Does not include radio interface cable. Custom cabs only. Headsets to be shipped loose. | 4591 |
| 5350-0080 | Camera back-up Safety Vision LCD model SV-CLCD70A-625B with split screen capable monitor and audio. For use with up to 4 cameras. | 2730 |
| 5350-0081 | Backup Camera to be located in recess direction lightbar box offset to officer side. | 239 |
| 5350-0083 | See instructions on file with sales for locations of headset plug-ins. | 112 |
| 5350-0084 | David Clark model 3800 intercom system with (6) cab head sets. Headsets to be shipped loose. | 9027 |
| 5350-0085 | Safety Vision officer's side camera SV-622RS w/ SV-512 cable. Requires Safety Vision back-up camera option. Camera to be located up high on officer side of the cab centrally located (above canopy window if applicable) interlocked with right turn signal. Camera only - does not include monitor. | 1055 |
| 5350-0086 | Safety Vision driver's side camera SV-622LS w/ SV-512 cable. Requires Safety Vision back-up camera option. Camera to be located up high on driver side of the cab centrally located (above canopy window if applicable) interlocked with left turn signal. Camera only - does not include monitor. | 1055 |
| 5350-0110 | Camera backup Zone Defense LCD model SYS-323-1-4Q with split screen capable monitor. | 2248 |

| Item No. | Description | |
|---|---|---|
| 5350-0111 | Camera backup Zone Defense LCD model SYS-323-1-4 with monitor and console. | 1514 |
| 5350-0112 | Sigtronics US-67S intercom system with (6) cab jacks six headsets / hooks PTT switches for driver / officer. Does not include radio interface cable. Custom cabs only. Headsets to be shipped loose. | 6344 |
| 5350-0114 | Sigtronics US-67D intercom system with (6) cab jacks six headsets / hooks PTT switches for driver / officer. Does not include radio interface cable. Custom cabs only. Headsets to be shipped loose. | 6468 |
| 5350-0116 | Federal Signal back-up/DVR camera system. Includes front view rear view camera side view cameras split screen monitor and DVR. | 4474 |
| 5350-0118 | Camera backup Federal Signal LCD model CAMSET70-NTSC-4 with monitor. | 1363 |
| 5350-0121 | Install supplied ICA110-05 Radio as required by Customer. Antenna installed at manufacturers discretion. Programming to be done by Customer. Wire to Master switch to toggle radio on and off with master power. | 1007 |
| 5350-0123 | Sigtronics US-12S intercom system with (7) cab jacks (1) pump panel jack seven headsets / hooks PTT switches for driver / officer / ppnl. Does not include radio interface cable. Custom cabs only. Headsets to be shipped loose. | 7278 |
| 5350-0130 | David Clark model 3800 intercom system with (6) cab head sets and (1) pump panel jack. Custom cabs only. Headsets to be shipped loose. | 11317 |
| 5350-0132 | David Clark model 3800 intercom system with four (4) cab head sets and one (1) pump panel jack. Radio interfaced to three (3) positions driver turret operator and pump panel. Headsets to be shipped loose. | 11720 |
| 5350-0134 | Voyager back-up camera wire through multiplex display. Video displays automatically when transmission is in reverse. | 793 |
| 5350-0136 | Sigtronics US-67D intercom system with (5) cab jacks (1) pump panel jack (1) driver rear body jack five headsets / hooks PTT switches for driver / officer / ppnl / rear body. Does not include radio interface cable. Custom cabs only. Headsets to be shipped loose. | 6023 |
| 5350-0137 | Sigtronics US-45S intercom system with (4) cab jacks four headsets / hooks PTT switches for driver / officer. Does not include radio interface cable. Custom cabs only. Headsets to be shipped loose. | 4733 |
| 5350-0140 | Safety Vision officer's side camera SV-622RS w/ SV-512 cable. Requires Safety Vision back-up camera option. Camera to be located on officer's side gravel shield offset to the rear. | 1020 |
| 5350-0141 | Safety Vision driver's side camera SV-622LS w/ SV-512 cable. Requires Safety Vision back-up camera option. Camera to be located on driver's side gravel shield offset to the rear. | 1020 |
| 5350-0142 | Safety Vision officer's side camera. Requires Safety Vision back-up camera option. SV-620 Kit w/ SV-523. Camera to be located on officer's side of cab above tank level lights. | 1020 |
| 5350-0158 | Camera back-up Safety Vision LCD model SV-CLCD70B-625B with audio. Located in cab dash on bracket (see photos). | 2329 |
| 5350-0169 | Camera back-up Safety Vision LCD model SV-CLCD-64-810 with lens shutter that opens when the unit is put in reverse. | 2409 |
| 5350-0173 | Safety Vision driver's side camera SV-622LS w/ SV-512 cable. Requires Safety Vision back-up camera option. Camera to be located on driver's side above forward tandem of rear axle. | 1020 |
| 5350-0174 | Safety Vision officer's side camera SV-622RS w/ SV-512 cable. Requires Safety Vision back-up camera option. Camera to be located on officer's side above forward tandem of rear axle. | 1020 |
| 5350-0175 | David Clark model 3800 intercom system with (4) cab head sets. Headsets to be shipped loose. | 6937 |
| 5350-0176 | David Clark model 3800 intercom system with (5) cab head sets and (1) pump panel jack. Custom cabs only. Headsets to be shipped loose. | 10327 |
| 5350-0177 | FireCom (4) position wireless 5yr extended warranty. Includes 5-day repair time with 2-day shipping. | 2013 |
| 5350-0180 | Safety Vision officer's side camera SV-622RS w/ SV-512 cable. Requires Safety Vision back-up camera option. Camera to be located up high on officer side of the cab centrally located (above canopy window if applicable) interlocked with left turn signal. Camera only - does not include monitor. | 1055 |
| 5350-0181 | Camera back-up Safety Vision LCD model SV-CLCD70BA-620A with audio. For use with up to 2 cameras. Includes monitor for console mounting. | 2500 |
| 5350-0182 | Safety Vision officer's side camera SV-622RS w/ SV-512 cable. Requires Safety Vision back-up camera option. Camera to be located on front cab corner (approx 31" bottom of camera to bottom of cab) interlocked with right turn signal. Camera only - does not include monitor. | 1055 |
| 5350-0183 | Safety Vision driver's side camera SV-622LS w/ SV-512 cable. Requires Safety Vision back-up camera option. Camera to be located on front cab corner (approx 31" bottom of camera to bottom of cab) interlocked with left turn signal. Camera only - does not include monitor. | 1055 |
| 5350-0186 | Back-up camera speaker. For use with V-MUX electrical system. Located in cab accessible to driver. | 242 |
| 5350-0188 | Federal Signal (Sony) back-up camera wire through multiplex display. Video displays automatically when transmission is in reverse. | 767 |
| 5350-0189 | Zone Defense PathFindIR FLIR camera. Located centered below windshield. For use with Safety Zone Defense split screen back-up camera system only. Includes guarded switch on driver side lower dash area. | 7001 |

| Item No. | Description | |
|---|---|---|
| 5350-0190 | Zone Defense side camera. Requires Zone Defense back-up camera option. Camera to be located on driver's and officer's side mirror. | 538 |
| 5350-0192 | Safety Vision back-up camera wired through multiplex display. Video displays automatically when transmission is in reverse. Camera only - does not include monitor. | 1020 |
| 5350-0193 | Voyager rear facing camera positioned on officer's side front cab corner (approx 31" bottom of camera to bottom of cab) interlocked with right turn signal. Camera only - does not include monitor. | 772 |
| 5350-0194 | Voyager rear facing camera positioned on driver's side front cab corner (approx 31" bottom of camera to bottom of cab) interlocked with left turn signal. Camera only - does not include monitor. | 772 |
| 5350-0196 | Sigtronics US-67D intercom system with (5) cab jacks (1) pump panel jack five headsets / hooks PTT switches for driver / officer / ppnl. Does not include radio interface cable. Custom cabs only. Headsets to be shipped loose. | 5670 |
| 5350-0197 | Safety Vision officer's side camera SV-622RS w/ SV-512 cable. Requires Safety Vision back-up camera option. Camera to be located on front fender interlocked with right turn signal. Camera only - does not include monitor. | 1055 |
| 5350-0198 | Voyager rear facing camera positioned on officer's side front fender interlocked with right turn signal. Camera only - does not include monitor. | 772 |
| 5350-0199 | FireCom intercom kit to include a digital intercom model 5100D four (4) plug in modules and headset hooks shall be installed within the cab. Headsets are not included and ordered separately (misc loose equip). | 2985 |
| 5350-0200 | FireCom intercom kit to include a digital intercom model 5100D four (4) plug in modules and headset hooks shall be installed within the cab and one (1) exterior pump panel plug in module. Headsets are not included and ordered separately (misc loose equip). | 3242 |
| 5350-0201 | FireCom intercom kit to include a digital intercom model 5100D six (6) plug in modules and headset hooks shall be installed within the cab. Headsets are not included and ordered separately (misc loose equip). | 3382 |
| 5350-0202 | FireCom intercom kit to include a digital intercom model 5100D six (6) plug in modules and headset hooks shall be installed within the cab and one (1) exterior pump panel plug in module. Headsets are not included and ordered separately (misc loose equip). | 3683 |
| 5350-0203 | FireCom intercom kit to include a digital intercom model 5100D five (5) plug in modules and headset hooks shall be installed within the cab. Headsets are not included and ordered separately (misc loose equip). | 3206 |
| 5350-0204 | FireCom intercom kit to include a digital intercom model 5100D five (5) plug in modules and headset hooks shall be installed within the cab and one (1) exterior pump panel plug in module. Headsets are not included and ordered separately (misc loose equip). | 3463 |
| 5350-0207 | FireCom wireless intercom kit to include a digital intercom model 5100D two (2) base transmit units with radio transmission one (1) base transmit unit for intercom only (no radios) and six (6) headset hooks shall be installed within the cab. Headsets are not included and ordered separately (misc loose equip). | 4686 |
| 5350-0208 | FireCom intercom kit to include a dual radio digital intercom model 5200D four (4) plug in modules and headset hooks shall be installed within the cab. Headsets are not included and ordered separately (misc loose equip). | 3501 |
| 5350-0209 | FireCom intercom kit to include a dual radio digital intercom model 5200D four (4) plug in modules and headset hooks shall be installed within the cab and one (1) exterior pump panel plug in module. Headsets are not included and ordered separately (misc loose equip). | 3758 |
| 5350-0213 | FireCom intercom kit to include a dual radio digital intercom model 5200D five (5) plug in modules and headset hooks shall be installed within the cab and one (1) exterior pump panel plug in module. Headsets are not included and ordered separately (misc loose equip). | 3980 |
| 5350-0219 | Safety Vision officer's side camera SV-622RS w/ SV-512 cable. Requires Safety Vision back-up camera option. Camera to be located on the officer side cab up high behind front door below the scene light interlocked with right turn signal. Camera only - does not include monitor. | 1055 |
| 5350-0221 | Setcom intercom kit to include a intercom model IM-900 and four (4) plug in modules shall be installed within the cab. Headsets are not included and ordered separately (misc loose equip). | 1458 |
| 5350-0222 | Setcom dual radio intercom kit to include a intercom model IM-900 and four (4) plug in modules shall be installed within the cab. Headsets are not included and ordered separately (misc loose equip). | 1977 |
| 5350-0223 | Setcom intercom kit to include a intercom model IM-900 four (4) plug in modules shall be installed within the cab and (1) pump panel plug in module. Headsets are not included and ordered separately (misc loose equip). | 1854 |
| 5350-0224 | Setcom dual radio intercom kit to include a intercom model IM-900 four (4) plug in modules shall be installed within the cab and (1) pump panel plug in module. Headsets are not included and ordered separately (misc loose equip). | 2373 |
| 5350-0225 | Setcom intercom kit to include a intercom model IM-900 and five (5) plug in modules shall be installed within the cab. Headsets are not included and ordered separately (misc loose equip). | 1806 |

| Item No. | Description | |
|---|---|---|
| 5350-0226 | Setcom dual radio intercom kit to include a intercom model IM-900 and five (5) plug in modules shall be installed within the cab. Headsets are not included and ordered separately (misc loose equip). | 2324 |
| 5350-0227 | Setcom intercom kit to include a intercom model IM-900 five (5) plug in modules shall be installed within the cab and (1) pump panel plug in module. Headsets are not included and ordered separately (misc loose equip). | 2202 |
| 5350-0228 | Setcom dual radio intercom kit to include a intercom model IM-900 five (5) plug in modules shall be installed within the cab and (1) pump panel plug in module. Headsets are not included and ordered separately (misc loose equip). | 2718 |
| 5350-0229 | Setcom intercom kit to include a intercom model IM-900 and six (6) plug in modules shall be installed within the cab. Headsets are not included and ordered separately (misc loose equip). | 1806 |
| 5350-0230 | Setcom dual radio intercom kit to include a intercom model IM-900 and six (6) plug in modules shall be installed within the cab. Headsets are not included and ordered separately (misc loose equip). | 2324 |
| 5350-0231 | Setcom intercom kit to include a intercom model IM-900 six (6) plug in modules shall be installed within the cab and (1) pump panel plug in module. Headsets are not included and ordered separately (misc loose equip). | 2202 |
| 5350-0232 | Setcom dual radio intercom kit to include a intercom model IM-900 six (6) plug in modules shall be installed within the cab and (1) pump panel plug in module. Headsets are not included and ordered separately (misc loose equip). | 2718 |
| 5350-0233 | Setcom wireless intercom kit to include a intercom model IM-900 and four (4) wireless adapters shall be installed within the cab. Headsets are not included and ordered separately (misc loose equip). | 2119 |
| 5350-0234 | Setcom wireless dual radio intercom kit to include a intercom model IM-900 and four (4) wireless adapters shall be installed within the cab. Headsets are not included and ordered separately (misc loose equip). | 2637 |
| 5350-0235 | Setcom wireless intercom kit to include a intercom model IM-900 and five (5) wireless adapters shall be installed within the cab. Headsets are not included and ordered separately (misc loose equip). | 2603 |
| 5350-0236 | Setcom wireless dual radio intercom kit to include a intercom model IM-900 and five (5) wireless adapters shall be installed within the cab. Headsets are not included and ordered separately (misc loose equip). | 3122 |
| 5350-0237 | Setcom wireless intercom kit to include a intercom model IM-900 and six (6) wireless adapters shall be installed within the cab. Headsets are not included and ordered separately (misc loose equip). | 2744 |
| 5350-0238 | Setcom wireless dual radio intercom kit to include a intercom model IM-900 and six (6) wireless adapters shall be installed within the cab. Headsets are not included and ordered separately (misc loose equip). | 3262 |
| 5350-0239 | David Clark model 3800 intercom system with (4) cab head sets and (1) pump panel jack. Custom cabs only. Headsets to be shipped loose. | 9335 |
| 5350-0241 | Zone Defense side camera. Requires Zone Defense back-up camera option. Camera to be located on officer's side mirror. | 290 |
| 5350-0243 | FireCom intercom kit to include a digital intercom model 5100D eight (8) plug in modules and headset hooks shall be installed within the cab. Headsets are not included and ordered separately (misc loose equip). | 3867 |
| 5350-0246 | Voyager rear facing camera positioned on officer's side front cab mirror (approx 31" bottom of camera to bottom of cab) interlocked with right turn signal. Camera only - does not include monitor. | 772 |
| 5350-0247 | Remote 5100D head for Firecom intercom. Location: [#LOC]. | 663 |
| 5350-0248 | Remote 5200D head for Firecom intercom. Location: [#LOC]. | 751 |
| 5350-0249 | Sigtronics US-45S Ultrasound Intercom System with (4) cab jacks (4) headsets (2) SE-8RPTT headsets dual speaker flex boom mic with radio push to talk switch (2) SE-8 headsets dual speaker flex boom mic. Includes HLN6961 radio interface cable. Custom cabs only. Headsets to be shipped loose. | 6040 |
| 5350-0251 | Camera system Brigade 360. Includes 4 cameras located front rear left and right. Requires seperate multiplex color display as the monitor. Note: cameras must be located as high as possible with side cameras centrally located. (Requires approval for stainless steel prodcut.) | 8187 |
| 5350-0252 | Brigade Digital Video Recorder model MDR-304 for use with Brigade camera system. | 2511 |
| 5350-0253 | Voyager officer camera positioned on the officer's side of the speedlay module up high near the E-ONE Logo looking downward. Camera only - does not include monitor | 772 |
| 5350-0254 | Zone Defense back-up camera wired through multiplex display. Video displays automatically when transmission is in reverse. Camera only - does not include monitor. | 538 |
| 5350-0255 | Foot switch driver side Setcom. Trico foot switch to key the microphone includes 16' cable. | 398 |
| 5350-0256 | Install customer supplied communication system. Antenna installed at manufacturers discretion. Programming to be done by customer. Wire to master switch to toggle radio on and off with master power. | 1620 |

| Item No. | Description | |
|---|---|---|
| 5350-0257 | Federal Signal (Sony) driver's side camera. Camera to be located up high on driver side of the cab centrally located (above canopy window if applicable) interlocked with left turn signal. Camera only - does not include monitor. | 767 |
| 5350-0258 | Federal Signal (Sony) officer's side camera. Camera to be located up high on officer side of the cab centrally located (above canopy window if applicable) interlocked with left turn signal. Camera only - does not include monitor. | 767 |
| 5350-0261 | David Clark model 3800 intercom system with (8) head sets and (1) pump panel jack. Custom cabs only. Headsets to be shipped loose. | 13258 |
| 5350-0262 | David Clark model 3800 intercom system with (8) cab head sets. Headsets to be shipped loose. | 11118 |
| 5350-0263 | Sigtronics US-12S intercom system with (8) cab jacks (1) pump panel jack eight headsets / hooks PTT switches for driver / officer / ppnl. Does not include radio interface cable. Custom cabs only. Headsets to be shipped loose. | 8082 |
| 5350-0264 | Safety Vision camera. Requires Safety Vision back-up camera option or multiplex display. SV-625B Kit. Camera to be located driver side compartment top above dump chute officer side below diamond plate mounting box for scene light above dump chute. | 2037 |
| 5350-0265 | FireCom intercom kit to include a digital intercom model 5100D six (6) plug in modules and headset hooks shall be installed within the cab and one (1) exterior plug in module in L1 adjacent to breaker box (if equipped). Headsets are not included and ordered separately (misc loose equip). | 3683 |
| 5350-0268 | Install customer supplied new FireCom 5100D (4) cab (1) pump panel intercom system. | 785 |
| 5350-0269 | Camera system Voyager model AOM713WP 7" waterproof monitor with VCMS10B camera located on officer side pump module up high. Monitor located on pump operator panel. | 1393 |
| 5350-0270 | Federal Signal (Sony) driver's side camera. Camera to be located on front cab corner (approx 31" bottom of camera to bottom of cab) interlocked with left turn signal. Camera only - does not include monitor. | 767 |
| 5350-0271 | Federal Signal (Sony) officer's side camera. Camera to be located on front cab corner (approx 31" bottom of camera to bottom of cab) interlocked with right turn signal. Camera only - does not include monitor. | 767 |
| 5350-0275 | Zone Defense PathFindIR FLIR camera. Located centered below windshield. No monitor included; camera only. Video wired through multiplex display in cab. | 7001 |
| 5350-0276 | Back-up camera speaker. For use with V-MUX electrical system. Located on driver side overhead console. | 242 |
| 5350-0277 | FireCom (5) position (1) which is wireless. Intercom kit to include a digital intercom model 5100D one (1) base transmit unit with radio transmission (for wireless) (4) plug in modules and (5) headset hooks shall be installed within the cab. Headsets are not included and ordered separately (misc loose equip). | 3576 |
| 5350-0278 | FireCom wireless intercom kit to include a digital intercom model 5100D two (2) base transmit units with radio transmission and two (2) headset hooks shall be installed within the cab. Headsets are not included and ordered separately (misc loose equip). | 3415 |
| 5350-0279 | FireCom intercom kit to include a digital intercom model 5100D six (6) plug in modules and headset hooks shall be installed within the cab and one (1) exterior plug in module at the driver side rear of body. Headsets are not included and ordered separately (misc loose equip). | 3683 |
| 5350-0283 | Zone Defense side camera. Requires Zone Defense back-up camera option. Camera to be located on officer's side of cab ahead of cab door driprail approx. 31" above bottom of cab. | 538 |
| 5350-0284 | Zone Defense side camera. Requires Zone Defense back-up camera option. Camera to be located on driver's side of cab ahead of cab door driprail approx. 31" above bottom of cab. | 538 |
| 5350-0285 | FireCom (6) position (2) which are wireless. Intercom kit to include a digital intercom model 5100D two (2) base transmit unit with radio transmission (for wireless) (4) plug in modules and (6) headset hooks shall be installed within the cab. Headsets are not included and ordered separately (misc loose equip). | 4258 |
| 5350-0286 | FireCom (6) position (2) which are wireless. Intercom kit to include a digital intercom model 5200D two (2) base transmit unit with radio transmission (for wireless) (4) plug in modules and (6) headset hooks shall be installed within the cab. Headsets are not included and ordered separately (misc loose equip). | 5107 |
| 5350-0287 | Brushed stainless steel camera shield. | 276 |
| 5350-0289 | FireCom (5) position (2) which are wireless. Intercom kit to include a digital intercom model 5100D two (2) base transmit unit with radio transmission (for wireless) (3) plug in modules and (5) headset hooks shall be installed within the cab. Headsets are not included and ordered separately (misc loose equip). | 4242 |
| 5350-0290 | Federal Signal back-up camera flush mounted and wired through multiplex display. Video displays automatically when transmission is in reverse. | 767 |
| 5350-0291 | Sigtronics US-67S intercom system with (6) cab jacks (1) pump panel jack six headsets / hooks PTT switches for driver / officer / ppnl. Does not include radio interface cable. Custom cabs only. Headsets to be shipped loose. | 6475 |

| Item No. | Description | |
|---|---|---|
| 5350-0292 | Sigtronics US-45D intercom system with (3) cab jacks (1) pump panel jack (1) turntable jack three headsets / hooks PTT switches for driver/officer/ppnl/turntable. Does not include radio interface cable. Custom cabs only. Headsets to be shipped loose. | 4776 |
| 5350-0293 | FireCom intercom kit to include a digital intercom model 5100D five (5) plug in modules and headset hooks shall be installed within the cab and one (1) exterior plug in module at the driver side rear of body. Headsets are not included and ordered separately (misc loose equip). | 3463 |
| 5350-0295 | Remote 5400D head for Firecom intercom. Location: [#LOC]. | 939 |
| 5350-0299 | Safety Vision CF DVR with SV-620A camera on front of cab above grille. No monitor. Camera to record when truck is in operation both drriving and sitting idle. | 3119 |
| 5350-0300 | David Clark model 3800 dual radio intercom system with (6) cab head sets. Headsets to be shipped loose. | 9184 |
| 5350-0303 | FireCom intercom kit to include a digital intercom model 5100D one (1) plug in module and headset hook shall be installed within the cab and one (1) exterior pump panel plug in module. Headset is not included and ordered separately (misc loose equip). | 2555 |
| 5350-0306 | David Clark model 3800 wireless intercom system with (4) cab head sets. Headsets and battery packs to be shipped loose. | 12708 |
| 5350-0308 | Safety Vision forward camera. Requires Safety Vision back-up camera option. SV-620 Kit w/ SV-523. Camera to be located on front of cab centered below windshield. | 1020 |
| 5350-0311 | Rosco dual vision camera system model DV231. Interior mounted at the front windshield. | 1924 |
| 5350-0312 | Setcom aerial advantage antenna kit for wireless headsets (EA). Location(s) to be determined by available space on cab roof. | 309 |
| 5350-0317 | Sigtronics US-67D intercom system with (5) cab jacks five headsets / hooks PTT switches for driver / officer. Does not include radio interface cable. Custom cabs only. Headsets to be shipped loose. | 5558 |
| 5350-0318 | David Clark model 3800 dual intercom system with (6) cab head sets and (1) pump panel jack. Custom cabs only. Headsets to be shipped loose. | 11317 |
| 5350-0319 | FireCom wireless intercom kit to include a digital intercom model 5100D one (1) base transmit unit with up to (5) radio/intercom only transmission and up to (5) headset hooks shall be installed within the cab. Headsets are not included and ordered separately (misc loose equip). | 4140 |
| 5350-0320 | FireCom wireless intercom kit to include a digital dual intercom model 5200D one (1) base transmit unit with up to (5) radio/intercom only transmission and up to (5) headset hooks shall be installed within the cab. Headsets are not included and ordered separately (misc loose equip). | 4633 |
| 5350-0321 | FireCom wireless intercom kit to include a digital intercom model 5100D one (1) base transmit unit with up to (10) radio/intercom only transmission and up to (10) headset hooks shall be installed within the cab. Headsets are not included and ordered separately (misc loose equip). | 6166 |
| 5350-0322 | FireCom wireless intercom kit to include a digital dual intercom model 5200D one (1) base transmit unit with up to (10) radio/intercom only transmission and up to (10) headset hooks shall be installed within the cab. Headsets are not included and ordered separately (misc loose equip). | 6657 |
| 5350-0323 | Camera system Voyager model AOM713WP 7" waterproof monitor with VCMS10B camera located on officer side body above R1. Monitor located on pump operator panel. | 1393 |
| 5350-0324 | Safety Vision officer's side camera SV-622RS w/ SV-512 cable. Requires Safety Vision back-up camera option. Camera to be located on the officer side cab above fenderette interlocked with right turn signal. Camera only - does not include monitor. | 1055 |
| 5350-0326 | David Clark model 3800 intercom system with (4) cab head sets. Driver and officer will be wireless; all others are wired. Headsets to be shipped loose. | 8804 |
| 5380-0004 | Compartment light incandescent additional (EA). Locate opposite of standard (if applicable) in compartment [#LOC] | 85 |
| 5380-0005 | Compartment light Truck-Lite LED additional (EA). Locate opposite of standard in compartment [#LOC]. | 221 |
| 5380-0006 | Compartment light incandescent additional (EA). Door(s) mounted. Compartment [#LOC]. | 132 |
| 5380-0007 | Compartment light Truck-Lite LED additional (EA). Door(s) mounted. Compartment [#LOC]. | 301 |
| 5380-0008 | Compartment light package incandescent for small bodies. | 568 |
| 5380-0009 | Compartment light package incandescent for medium bodies. | 847 |
| 5380-0011 | Compartment light package LED for small bodies. | 2021 |
| 5380-0012 | Compartment light package Truck-Lite LED for medium bodies. | 3380 |
| 5380-0027 | Ground light package for cab and body - small. | 527 |
| 5380-0029 | Ground light package for cab and body - large. | 791 |
| 5380-0030 | Ground light package LED - small. | 1721 |
| 5380-0032 | Ground light package LED - large. | 2576 |
| 5380-0033 | Step light package body - small. | 492 |
| 5380-0035 | Step light package body - large. | 737 |
| 5380-0036 | Step light package body LED - small. | 1684 |
| 5380-0038 | Step light package body LED - large. | 2523 |

| Item No. | Description | |
|---|---|---|
| 5380-0042 | Light recessed step Truck-Lite incandescent (additional). Locate [#LOC]. | 135 |
| 5380-0045 | Light recessed step Truck-Lite LED (additional). Locate [#LOC]. | 207 |
| 5380-0053 | Lights under rear intermediate step LED (2). 4" grommet mounted lights. Lights operated with switch on rear of body. Locate switch below driver side intermediate step. | 611 |
| 5380-0055 | Cab and body ground lights to be wired through chassis reverse. | 88 |
| 5380-0056 | Compartment lights to be wired to automatically activate when park brake is set (IPO cab mtd compartment light switch). | 88 |
| 5380-0059 | Additional incandescent ground lights. Locate below L1/R1 and L3/R3. | 594 |
| 5380-0060 | Additional LED ground light (EA). Location: Below [#LOC]. | 233 |
| 5380-0061 | LED hosebed walkway light package. Includes lighting located to the outboard side of the walkway and (1) at the rear of the walkway facing forward. Lights to be switched with work light switch in cab. | 795 |
| 5380-0062 | Compartment light Federal Signal LED additional (EA). Locate opposite of standard in compartment [#LOC]. | 155 |
| 5380-0064 | Compartment light package Federal Signal LED for small bodies. | 1616 |
| 5380-0065 | Compartment light package Federal Signal LED for medium bodies. | 2748 |
| 5380-0067 | Ground light package Federal Signal LED - small. | 1721 |
| 5380-0068 | Ground light package Federal Signal LED - large. | 2577 |
| 5380-0069 | Step light package body Federal Signal LED - small. | 1293 |
| 5380-0070 | Step light package body Federal Signal LED - large. | 1943 |
| 5380-0071 | Light Federal Signal recessed step LED (additional). Locate [#LOC]. | 166 |
| 5380-0072 | Additional Federal Signal LED ground light (EA). Location: Below [#LOC] | 218 |
| 5380-0075 | Compartment light incandescent additional (EA). Locate on ceiling of [#LOC]. | 85 |
| 5380-0076 | Compartment light deluxe package Whelen PSC0CDCR LED for medium bodies. Light to be stacked vertically on both sides of compartment. | 8834 |
| 5380-0077 | Compartment light package Amdor Luma-Bar LED for medium bodies. Includes one light per compartment (two if transverse). | 2772 |
| 5380-0078 | Compartment light Amdor Luma-Bar LED 26-42" long additional (EA). Locate [#LOC]. | 269 |
| 5380-0079 | Compartment light Amdor Luma-Bar LED 48-74" long additional (EA). Locate [#LOC]. | 410 |
| 5380-0081 | Compartment light package Whelen LED for medium bodies. | 5261 |
| 5380-0082 | Ground light package Whelen LED - large. | 3482 |
| 5380-0083 | Step light package Whelen LED - large. | 3482 |
| 5380-0087 | Compartment light package Weldon LED for medium bodies. | 2260 |
| 5380-0088 | Ground light package Weldon LED - small. | 1552 |
| 5380-0089 | Step light package body Weldon LED - small. | 1130 |
| 5380-0090 | Compartment light LED (EA). Location: [#LOC]. | 221 |
| 5380-0098 | Compartment light package Whelen PSC0CDCR LED for medium bodies. Light to be stacked vertically on one side of compartment. | 4418 |
| 5380-0111 | Compartment light Amdor LED for medical cabinet (EA). | 269 |
| 5380-0116 | Ground light package Amdor Luma-Bar H2O LED - large. | 1996 |
| 5380-0121 | (2) Incandescent 4" round lights for use with preconnect module. Locate (1) each side on front compartment face down low. | 189 |
| 5380-0122 | (2) Weldon LED 4" round lights for use with preconnect module. Locate (1) each side on front compartment face down low. | 276 |
| 5380-0127 | LED body compartment light package for body and preconnect module. Lights locate (1) each preconnect tool compartment (2) each for L1/R1 (1) each for L2/R2 and (2) each for L3/R3 (pump operator compartment to have the lights in the lower area only) | 1206 |
| 5380-0128 | LED body compartment light package for body and transverse module. Lights locate (4) transverse module- (2) each on forward wall of each opening (2) each for L1/R1 (1) each for L2/R2 and (2) each for L3/R3 (pump operator compartment to have the lights in the lower area only) | 1331 |
| 5380-0133 | Light recessed step Weldon LED (additional). Locate [#LOC] | 140 |
| 5380-0138 | Compartment light ROM V3 LED 24-36" long additional (EA). Locate [#LOC]. | 298 |
| 5380-0140 | Compartment light ROM V3 LED for medical cabinet (EA). | 366 |
| 5380-0141 | Compartment light package ROM V3 LED for medium bodies. Includes one light per compartment (two if transverse). | 3311 |
| 5380-0142 | Compartment light package ROM V3 LED for medium bodies. Includes two lights per compartment (four if transverse). | 6621 |
| 5380-0144 | Compartment light package Amdor Luma-Bar LED for medium bodies. Includes two lights per compartment (four if transverse). | 5543 |
| 5380-0146 | Compartment light Amdor LED additional (EA) ceiling mounted as close to door opening as practical. Location: [#LOC]. | 269 |
| 5380-0161 | Light recessed step Truck-Lite incandescent. Locate one each side of top mount walkway. | 270 |
| 5380-0162 | Light recessed step Truck-Lite LED. Locate one each side of top mount walkway. | 411 |
| 5380-0163 | Light recessed step Federal Signal LED. Locate one each side of top mount walkway. | 332 |
| 5380-0166 | Compartment light Trucklite LED additional (EA). Locate in [#LOC]. | 221 |
| 5380-0182 | Ground light package EON LED - large. | 1445 |

| Item No. | Description | |
|---|---|---|
| 5380-0183 | TM Walkway lighting TecNiq EON LED. Includes (3) lights with S/S housings low on front of module to illuminate top mount walkway. | 265 |
| 5380-0189 | Compartment light package Amdor Luma-Bar LED for small bodies. Includes one light per compartment (two if transverse). | 1729 |
| 5380-0190 | Compartment light package Amdor Luma-Bar LED for small bodies. Includes two lights per compartment (four if transverse). | 3456 |
| 5380-0202 | Step light package body EON LED - large. | 1227 |
| 5380-0203 | Step light package body EON LED - small. | 833 |
| 5380-0205 | Cab step lighting package. Includes (2) EON LED lights per side. | 269 |
| 5380-0206 | Cab step lighting package. Includes (4) EON LED lights per side. | 533 |
| 5380-0207 | Intermediate pump panel step lights (PR). EON LED lights. | 135 |
| 5380-0209 | Compartment light Amdor LED for medical cabinet (PR). | 537 |
| 5380-0212 | Lights (PR) Tecniq EON LED lights 1 each side (driver and officer side) of the speedlay storage compartment. | 268 |
| 5380-0214 | Compartment light Truck-Lite LED additional (EA). Locate on ceiling of [#LOC]. | 221 |
| 5380-0216 | Ground light package LED for chassis. Includes (6) Trucklite LED lts. | 1481 |
| 5380-0217 | Compartment light Whelen Fluorent Plus for medical cabinet (PR). | 757 |
| 5380-0218 | Step light package Whelen LED - small. | 1927 |
| 5380-0220 | Compartment light package Whelen Fluorent Plus for medium bodies. Includes two lights per compartment (four if transverse). | 8227 |
| 5380-0223 | Amdor LED strip lights for NFPA hose bed lighting. The lights to be mounted inside hose bed cover thru cover plate on outer skin. Light will illuminate the hose bed area thru slots in the inner skin. | 2630 |
| 5380-0226 | Compartment light Amdor white lumbar. Location: [#LOC]. | 238 |
| 5380-0228 | Stainless steel bolt on light guard to protect hose bed lightring fixture(s) from damage. | 128 |
| 5380-0235 | Ground light package Amdor Luma Bar H2O LED - small. | 1058 |
| 5380-0236 | Additional LumaBar H2O LED ground light (EA). Location: Below [#LOC]. | 184 |
| 5380-0238 | Compartment light package Amdor Luma-Bar Red LED for small bodies. Includes one light per compartment (two if transverse). | 1729 |
| 5380-0239 | Whelen PELCC ground light package LED - large. | 3119 |
| 5380-0240 | Compartment light package Amdor Luma-Bar Red LED for medium bodies. Includes one light per compartment (two if transverse). | 2772 |
| 5380-0241 | Ground light package TecNiq LED - small. | 539 |
| 5380-0242 | Ground light package TecNiq LED - large. | 807 |
| 5380-0243 | Compartment light package TecNiq LED for medium bodies. | 928 |
| 5380-0244 | Compartment light package TecNiq LED for small bodies. | 558 |
| 5380-0245 | Compartment light ROM V4 LED 24-36" long additional (EA). Locate [#LOC]. | 298 |
| 5380-0246 | Compartment light ROM V4 LED 42-72" long additional (EA). Locate [#LOC]. | 499 |
| 5380-0247 | Compartment light ROM V4 LED for medical cabinet (EA). | 366 |
| 5380-0248 | Compartment light ROM V4 LED for medical cabinet (PR). | 731 |
| 5380-0249 | Compartment light package ROM V4 LED for small bodies. Includes one light per compartment (two if transverse). | 2038 |
| 5380-0250 | Compartment light package ROM V4 LED for small bodies. Includes two lights per compartment (four if transverse). | 4072 |
| 5380-0251 | Compartment light package ROM V4 LED for medium bodies. Includes one light per compartment (two if transverse). | 3311 |
| 5380-0252 | Compartment light package ROM V4 LED for medium bodies. Includes two lights per compartment (four if transverse). | 6621 |
| 5380-0258 | Light recessed step TecNiq LED. Locate one each side of top mount walkway. | 127 |
| 5380-0259 | Compartment light ROM V4 LED additional (EA) ceiling mounted as close to door opening as practical. Location: [#LOC]. | 366 |
| 5380-0261 | Dunnage pan lights EON (PR). Evenly spaced on front wall of dunnage pan wired through pump panel lights. | 135 |
| 5380-0263 | Raised bumper lid lights EON (PR). Evenly spaced under extra capacity lid wired through door ajar switch. | 248 |
| 5380-0266 | Whelen PELCC lights LED (PR). Wired through work light switch. Location: [#LOC]. | 685 |
| 5380-0267 | Compartment light package ROM V4 LED for Water Master. Includes two lights per compartment. | 1461 |
| 5380-0276 | Compartment light package TecNiq T440 4" LED for small bodies. | 664 |
| 5380-0277 | Compartment light package TecNiq T440 4" LED for medium bodies. | 995 |
| 5380-0279 | Ground light package TecNiq T440 4" LED - small. | 610 |
| 5380-0280 | Ground light package TecNiq T440 4" LED - large. | 917 |
| 5380-0281 | Light recessed step TecNiq T440 4" LED. Locate one each side of top mount walkway. | 144 |
| 5380-0282 | Compartment light TecNiq T440 4" LED additional (EA). Locate opposite of standard in compartment [#LOC]. " If transverse locate on opposite wall centered between the standard locations 15 inches from compartment edge." | 113 |
| 5380-0283 | Raised bumper lid light EON (EA). Locate under extra capacity lid wired through work light switch. | 124 |

| Item No. | Description | |
|---|---|---|
| 5380-0284 | EON step light located (2) each side under horizontal hosebed extrusion to illuminate compartment tops. | 511 |
| 5380-0285 | Step light package body TecNiq T440 4" LED - small. | 575 |
| 5380-0286 | Step light package body TecNiq T440 4" LED - large. | 865 |
| 5380-0287 | Dunnage area lights EON (PR). Evenly spaced on front wall of dunnage area wired through work lights. | 135 |
| 5380-0288 | Compartment light package Amdor Luma-Bar red LED for medium bodies. Includes two lights per compartment (four if transverse). | 5543 |
| 5380-0289 | Compartment light Amdor red LED for medical cabinet (PR). | 537 |
| 5380-0290 | Compartment light Amdor Luma-Bar red LED 48-74" long additional (EA). Locate [#LOC]. | 410 |
| 5380-0292 | Ground light package Whelen 3" LED - large. | 2078 |
| 5380-0293 | Step light package Whelen 3" LED - large. | 1547 |
| 5380-0296 | Compartment light package Amdor Luma-Bar blue LED for small bodies. Includes two lights per compartment (four if transverse). | 3456 |
| 5380-0297 | Compartment light Amdor LED blue for medical cabinet (EA). | 269 |
| 5380-0298 | Compartment light package Hansen 10mm LED for medium bodies. Includes two lights per compartment (four if transverse). | 2872 |
| 5380-0299 | Ground light package red Amdor Luma-Bar H2O LED - large. | 1996 |
| 5380-0300 | Compartment light package Amdor Luma-Bar red LED for small bodies. Includes two lights per compartment (four if transverse). | 3456 |
| 5380-0302 | Additional TecNiq T440 4" LED ground light (EA). Location: Below [#LOC]. | 144 |
| 5380-0303 | Compartment light Hansen 10mm LED for medical cabinet (PR). | 402 |
| 5380-0304 | Compartment light Amdor red/white LED for medical cabinet (EA). | 342 |
| 5380-0305 | Compartment light package Amdor Luma-Bar red/white LED for medium bodies. Includes two lights per compartment (four if transverse) and switch accessible to driver for red or white activation. | 7606 |
| 5380-0306 | One (1) TecNiq Dragon LED light shall be provided in [#LOC]. | 140 |
| 5380-0307 | Compartment light package Hansen LED for small bodies. Includes one light per compartment (two if transverse). | 966 |
| 5380-0308 | Compartment light package Hansen LED for medium bodies. Includes one light per compartment (two if transverse). | 1367 |
| 5380-0310 | Compartment light package Hansen LED for small bodies. Includes two lights per compartment (four if transverse). | 1932 |
| 5380-0311 | Compartment light package Hansen LED for medium bodies. Includes two lights per compartment (four if transverse). | 2735 |
| 5380-0313 | Compartment light Hansen 18-37" long additional (EA). Locate [#LOC]. | 198 |
| 5380-0314 | Compartment light Hansen LED 49-65" long additional (EA). Locate [#LOC]. | 209 |
| 5380-0315 | Compartment light Hansen LED for medical cabinet (EA). | 200 |
| 5380-0316 | Compartment light Hansen LED for medical cabinet (PR). | 399 |
| 5380-0317 | Step light additional. Amdor 20" Luma Bar H2O LED. Location: [#LOC]. | 234 |
| 5380-0318 | Whelen model 3SC0CDCR with chrome flange door pan mounted on outboard corners. Location: L2 | 393 |
| 5380-0319 | Light Amdor H2O LED 40" long additional (EA). Locate [#LOC]. | 488 |
| 5390-0000 | Deck light - Unity 12 volt (PR). Location: [#LOC]. | 417 |
| 5390-0001 | Hose bed light Unity. Locate at front area of hose bed. Switched with work light switch in cab. | 203 |
| 5390-0002 | Hose bed light Federal Signal GH Scene. Locate at the front area of hose bed. Switched with work light switch in cab. | 263 |
| 5390-0003 | Hose bed light Truck-Lite. Locate at the front area of the hose bed. Switched with work light switch in cab. | 122 |
| 5390-0004 | Crosslay lights Weldon. Locate on each side at rear of crosslay (SM) or forward of crosslay (TM) approx. 16" from side of body. | 372 |
| 5390-0005 | Crosslay light deck Unity. Locate to rear of crosslay (SM) or forward of crosslay (TM). | 197 |
| 5390-0006 | Deck lights Collins FX-12R (PR). Location: [#LOC]. | 1187 |
| 5390-0007 | Deck/scene light circuit wiring through chassis reverse. Requires rear deck or scene light. | 88 |
| 5390-0008 | Federal Signal GH scene lights (PR). Switch in cab (driver and officer side facing lights switched separately). Locate [#LOC]. | 490 |
| 5390-0018 | Whelen 600 series 26 degree scenelights (PR) with weatherproof connectors. Switch in cab (driver and officer side facing lights switched separately). Locate [#LOC]. | 387 |
| 5390-0019 | Whelen 700 series 8-32 degree scenelights (PR) with weatherproof connectors. Switch in cab (driver and officer side facing lights switched separately). Locate [#LOC]. | 381 |
| 5390-0020 | Whelen 900 series Gradient Opti-Scenelight (PR) with weatherproof connectors. Switched in cab (driver and officer side facing lights switched separately). Locate [#LOC]. | 387 |
| 5390-0022 | Crosslay light Truck-Lite. Locate to rear of crosslay (SM) and forward of crosslay (TM as applicable). Switched with work light switch in cab. | 122 |
| 5390-0023 | Tomar 46H13-C 13 degree scene lights (PR) with weatherproof connectors. Switch in cab (driver and officer side lights switched separately). Locate [#LOC]. | 431 |
| 5390-0024 | Deck Light - Truck-Lite (PR). Location: [#LOC]. | 360 |

| Item No. | Description | |
|---|---|---|
| 5390-0025 | Cab scene lights are to be switched with cab doors in addition to standard. | 88 |
| 5390-0026 | Federal Signal GH Scene cornering lights (PR) wired to turn signals reverse and work lights. Location: [#LOC] | 939 |
| 5390-0027 | Hosebed light Whelen 600 series 26 degree scene light with Cast Products LH46501 housing. Locate at the front area of hosebed. Switched with worklight switch in cab. | 242 |
| 5390-0029 | Crosslay light Whelen 600 series 26 degree scene light with Cast Products LH46501 housing. Locate to rear of crosslay (SM) and forward of crosslay (TM as applicable). Switched with worklight switch in cab. | 242 |
| 5390-0030 | Deck Lts-Collins FX-6 (PR) Location: [#LOC] | 1187 |
| 5390-0031 | Crosslay light Federal GH Scene light with Cast Products LH90603 housings (PR). Locate on back of cab 1" below roof between vista windows. | 701 |
| 5390-0034 | Whelen 600 series 26 degree scene lights (PR) with weatherproof connectors. To be used as cornering lights wired to turn signals and four way flashers. Interlock through park brake. Location: [#LOC]. | 387 |
| 5390-0035 | Federal Signal GH Scene Light (PR). Locate (1) at the front area of hosebed and (1) rearward of the crosslays. Switched with worklight switch in cab. Includes diamond plate mounting box. | 889 |
| 5390-0036 | Hose bed light circuit wiring through chassis reverse. Requires hose bed light. | 88 |
| 5390-0038 | 4" LED light (black groument) with diamond plate box mount (PR). Locate (1) at front of hosebed and (1) at the crosslay area. Switch with work light switch. | 806 |
| 5390-0039 | Federal Signal GH Scene lights (PR). Switch in cab (driver and officer side facing lights switched together). Locate [#LOC] | 490 |
| 5390-0040 | Weldon 4 x 6 HID scene lights (PR) with weatherproof connectors. Switch in cab (driver and officer side lights switched separately). Locate [#LOC]. | 1377 |
| 5390-0041 | Whelen 900 series Gradient Opti-Scene lights (PR) with diamond plate mounting box. Switch in cab (driver and officer side facing lights switched separately). Locate [#LOC]. | 584 |
| 5390-0043 | Crosslay light Trucklite. Locate forward of crosslay. Switched with work light switch in cab. | 122 |
| 5390-0044 | 4" LED light (black groument) with diamond plate box mount at front of hosebed. Switch with work light switch. | 392 |
| 5390-0046 | Federal Signal GH Scene Light (PR). Locate (1) forward facing for preconnect storage lighting and (1) rearward facing for hosebed storage lighting. Both lights mounted in (1) formed box mounted off forward area of body. Box may shift side to side for best lighting application. both lights switched with worklight switch. | 889 |
| 5390-0047 | Federal Signal GH scene Light. Locate rearward facing for hose bed storage lighting. Mounted in (1) formed box mounted off forward area of body. Box may shift side to side for best lighting application. Light switched with worklight switch. | 446 |
| 5390-0048 | Whelen 600 series gradient Super LED scene lights (PR) with weatherproof connectors. Switch in cab (driver and officer side lights switched separately). Locate [#LOC]. | 1134 |
| 5390-0049 | Whelen 600 series 26 degree scene lights (PR) with LH46001 castings. Switch in cab (side facing lights switched separately). Locate [#LOC]. | 496 |
| 5390-0050 | Whelen 500 series LED scene lights (PR) with weatherproof connectors. To be used as cornering lights wired to turn signals and four way flashers. Interlocked with park brake. Location: [#LOC] | 951 |
| 5390-0051 | Whelen 600 series gradient Super LED scene lights (PR) with weatherproof connectors. To be used as cornering lights wired to turn signals and four way flashers. Location: [#LOC]. | 1134 |
| 5390-0052 | Federal Signal GH Scene lights (PR) with diamond plate mounting box. Switch in cab (driver and officer side facing lights switched separately). Locate [#LOC]. | 889 |
| 5390-0054 | Hosebed light Trucklite. Locate (1) each side front of hosebed. Switched with work light switch in cab. | 242 |
| 5390-0055 | Light Federal Signal GH Scene. Locate at the front area of hosebed. Switched with worklight switch in cab. Includes diamond plate mounting box. | 446 |
| 5390-0056 | Crosslay light Weldon. Locate to rear of crosslay (SM) or forward of crosslay (TM). Switched with work light switch in cab. | 189 |
| 5390-0057 | Hosebed light Weldon. Locate at front area of hosebed. Switched with work light switch in cab. | 189 |
| 5390-0058 | Deck Lights - Truck-Lite LED model 81380 (PR). Location: [#LOC]. | 456 |
| 5390-0059 | Whelen 600 series 26 degree scene lights (PR) with diamond plate mounting box. Switch in cab (side facing lights switched separately). Locate [#LOC]. | 617 |
| 5390-0066 | Whelen 600 series gradient Super LED scene lights (PR) with weatherproof connectors and diamond plate mounting boxes. Switch in cab (driver and officer side lights switched separately). Locate [#LOC]. | 1242 |
| 5390-0068 | Havis Shield 12V HID scene lights model KR-4035X-D (PR). Location(s): [#LOC]. Includes switch in cab for side facing lights. | 1794 |
| 5390-0069 | Whelen M9 Linear Super LED scene lights (PR). Switched in cab (lights mtd on the sides of apparatus to be switched separately). Locate [#LOC]. | 1850 |
| 5390-0070 | Crosslay light Collins FX-12. Locate to rear of crosslay (SM) and forward of crosslay (TM as applicable). | 596 |
| 5390-0071 | Hosebed light Collins FX-12. Located center front of hosebed. Switched with work light switch in cab | 596 |

| Item No. | Description | |
|---|---|---|
| 5390-0072 | Speedlay Light Federal Signal GH Scene. Locate on front of upper pump module facing downward to illuminate speedlays. Switched with worklight switch in cab. | 263 |
| 5390-0073 | Deck Light - Whelen LED model PFBP12C (PR). Location: [#LOC]. | 1201 |
| 5390-0075 | Speedlay light Trucklite. Locate forward area of pump module. Switched with work light switch in cab. | 122 |
| 5390-0076 | Hose bed light Truck-Lite LED model 81380. Locate at front of hose bed. Switched with work light switch in cab. | 230 |
| 5390-0077 | Deck Lt-Collins FX-12R (EA) model KR-SB-312 with lift/push up pole. Due to body mount location a position indicator will not be required. Location(s): [#LOC]. | 1001 |
| 5390-0081 | Deck Light - Grote LED model 63581 (PR) Location: [#LOC]. | 1889 |
| 5390-0082 | Whelen 600 series 26 degree scene 24VDC lights (PR) with weatherproof connectors. Switch in cab (driver and officer side facing lights switched separately). Locate [#LOC]. | 417 |
| 5390-0083 | Federal Signal GH Scene light (EA). Switched with work light switch in cab. Locate up high driver rear of body. | 247 |
| 5390-0087 | Whelen M6 Linear Super LED scene lights (PR). Switched in cab (lights mtd on the sides of apparatus to be switched separately). Locate [#LOC]. | 1329 |
| 5390-0088 | Crosslay light Whelen PFBP12C LED. Locate to rear of crosslay (SM) and forward of crosslay (TM as applicable). Switched with work light switch in cab. | 602 |
| 5390-0089 | Hose bed light Whelen PFBP12C LED. Locate center front of hose bed. Switched with work light switch in cab. | 602 |
| 5390-0090 | Hosebed light Whelen 600 series Super LED scene light with diamond plate box. Locate at the front area of hosebed. Switched with worklight switch in cab. | 624 |
| 5390-0091 | Crosslay light Whelen 600 series 26 degree Super LED scene light with diamond plate box. Locate to rear of crosslay (SM) and forward of crosslay (TM as applicable). Switched with worklight switch in cab. | 624 |
| 5390-0094 | Federal Signal GH Scene light (EA). Switched with work light switch in cab. Locate up high center rear of body. | 247 |
| 5390-0096 | Hosebed light Trucklite LED. Locate (1) in each outer hosebed upper front wall (if equipped) and (2) upper front wall of center hosebed . Switched with work light switch in cab. | 977 |
| 5390-0102 | Crosslay light Truck-Lite LED model 81380. Locate to rear of crosslay (SM) and forward of crosslay (TM as applicable). Switched with work light switch in cab. | 230 |
| 5390-0103 | Whelen 700 series gradient Super LED scene lights (PR) with weatherproof connectors. Switch in cab (driver and officer side lights switched separately). Locate [#LOC]. | 1100 |
| 5390-0104 | Light Whelen Pioneer Plus model PFP1 with recess mount. Wired through work light switch in cab. Location(s): [#LOC]. | 1524 |
| 5390-0110 | Hosebed light Grote LED model 63581. Locate center front of hosebed. Switched with work light switch in cab. | 946 |
| 5390-0111 | Crosslay light Grote LED model 63581. Locate to rear of crosslay (SM) and forward of crosslay (TM as applicable). Switched with work light switch in cab. | 946 |
| 5390-0114 | Whelen M6 Linear Super LED hosebed lights (PR) with weatherproof connectors and diamond plate mounting boxes. Locate equally spaced each side at the front area of hosebed. Switched with worklight switch in cab. | 1528 |
| 5390-0117 | Whelen 700 series gradient Super LED scene lights (PR). To be used as cornering lights wired to turn signals reverse and work lights. Location: [#LOC]. | 1134 |
| 5390-0118 | Grote 63581 LED scene lights (6). Switch in cab (driver and officer side lights switched separately). Lights located (2) each side of body up high (offset forward and rearward) and (2) at rear of body up high. Wetside only. | 4537 |
| 5390-0119 | Light Whelen Pioneer Plus model PFP1 with ROM KR-SB-600-W4 pedestal side mount. Switched with work light switch in cab. Location(s): [#LOC]. | 3045 |
| 5390-0122 | Whelen 900 series model 90C0ENZR Super LED Opti-Scene light (PR) with cast products mounting box. Switch in cab (driver and officer side lights switched separately). Locate [#LOC]. | 2067 |
| 5390-0123 | Federal Signal model QL97LEDSCENE LED scene light (PR) with weatherproof connectors. Includes switch accessible to driver (driver and officer side lights switched separately). Locate [#LOC]. | 1108 |
| 5390-0124 | Whelen 600 series gradient Super LED scene lights (3) with weatherproof connectors. Wire through work light switch in cab. Locate back of cab evenly spaced up high. | 1699 |
| 5390-0126 | Whelen M6 Linear Super LED hosebed light with weatherproof connector and diamond plate mounting box. Locate at the front area of hosebed. Switched with work light switch in cab. | 765 |
| 5390-0127 | Light Whelen 600 series 26 degree Super LED scene light. Locate to rear of body driver side centered vertically between tail light and upper rear warning. Switched with work-light switch in cab. | 624 |
| 5390-0129 | Hose bed light FRC LED900 with diamond plate mounting box. Locate [#LOC]. Switched with worklight switch in cab. | 1030 |
| 5390-0130 | Deck light Whelen PAR-36 model PFBP12C LED (PR). Switched with work light switch in cab. Location: [#LOC]. | 1201 |
| 5390-0131 | Crosslay light deck Unity. Locate light on the drivers side rearward of the crosslay door mounted on the Hot Shot II pan cover lid. | 197 |

| Item No. | Description | |
|---|---|---|
| 5390-0132 | Warning light Federal Signal QL64-BACKUP (PR) white with clear lens. Surface mounted with bezel. Location: [#LOC] | 691 |
| 5390-0133 | Deck lights - Unity 12 volt LED spot (PR). Location: [#LOC]. | 1137 |
| 5390-0136 | Whelen M9LZC Linear Super LED scene lights (PR) includes flange. Switched in cab (lights mounted on the sides of apparatus to be switched separately). Locate [#LOC]. | 1715 |
| 5390-0137 | Whelen M9 Linear Super LED scene lights (PR) with weatherproof connectors and diamond plate mounting boxes. Switch in cab (driver and officer side lights switched separately). Locate [#LOC]. | 2045 |
| 5390-0139 | Crosslay light Whelen PFBP12C LED (PR). Locate on each side at rear of crosslay (SM) or forward of crosslay (TM). Location: [#LOC]. Switched with work light switch in cab. | 1201 |
| 5390-0140 | Whelen 700 series gradient Super LED scene light (EA) with weatherproof connector(s). Switch in cab (driver and officer side lights if applicable switched separately). Locate [#LOC]. | 540 |
| 5390-0141 | Hosebed light Trucklite LED. Locate (1) in driver outer hosebed upper front wall and (2) upper front wall of center hosebed . Switched with work light switch in cab. | 732 |
| 5390-0143 | Crosslay light deck Unity. Locate to driver side rear of crosslay. | 197 |
| 5390-0144 | Unity deck light with model TP-1-I internal pull-up pole. Includes switch on lighthead and driver side overhead console. Location: [#LOC]. | 668 |
| 5390-0145 | EA (1) Collins FX-12 w/Internal Pole. Locate (1) Drivers side in deck gun channel. Light to serve as hosebed/crosslay lighting when applicable. | 1033 |
| 5390-0146 | Whelen M6 series gradient Super LED scene lights (PR) with weatherproof connectors. To be used as cornering lights wired to turn signals and four way flashers. Location: (1) each side offset rearward of rear most axle. | 1655 |
| 5390-0149 | Whelen 900 series model 90C0ENZR Super LED Opti-Scene light (EA) with diamond plate mounting box. Switch in cab (driver and officer side lights switched separately). Locate [#LOC]. | 1034 |
| 5390-0150 | Whelen 900 series model 90C0ENZR Super LED Opti-Scene light (EA) with cast products mounting box. Switch in cab (driver and officer side light(s) switched separately). Locate [#LOC]. | 1034 |
| 5390-0151 | Whelen M6 Linear Super LED scene lights (PR) with weatherproof connectors and diamond plate mounting boxes. Location: [#LOC]. Switched with worklight switch in cab. | 1528 |
| 5390-0152 | Whelen 600 series gradient Super LED surface mounted scene lights (PR) with weatherproof connectors. Switch in cab (driver and officer side lights switched separately). Locate [#LOC]. | 1134 |
| 5390-0154 | Weldon model 3010-2600-30 scene lights (PR) with diamond plate mounting box. Switch in cab (driver and officer side facing lights switched separately). Locate [#LOC]. | 842 |
| 5390-0155 | Hose bed light Amdor H2O. Locate at the front area of hose bed. SideStacker only. Switched with work light switch in cab. | 387 |
| 5390-0156 | Federal Signal model QL97LEDSCENE LED scene light (EA) with weatherproof connectors. Includes switch accessible to driver (driver and officer side lights switched separately). Locate [#LOC]. | 555 |
| 5390-0157 | Amdor Lumabar strip light on each side of the hosebed side upper extrusions. Switched with work light switch in cab. | 1319 |
| 5390-0159 | Whelen M6 Linear Super LED crosslay light with weatherproof connector and diamond plate mounting box. Locate to rear of crosslay (SM) and forward of crosslay (TM as applicable). Switched with work light switch in cab. | 765 |
| 5390-0160 | Whelen M6 series gradient Super LED scene lights (PR) with weatherproof connectors. To be used as cornering lights wired to turn signals and four way flashers. Location: (1) each side front bumper gravelshield offset rearward. | 1655 |
| 5390-0161 | Whelen M9 Linear Super LED scene lights (PR) with weatherproof connectors and smooth plate mounting boxes painted job (2-tone if applicable) color. Switch in cab (driver and officer side lights switched separately). Locate [#LOC]. | 2106 |
| 5390-0162 | Hose bed lights (2) Federal Signal GH Scene. Locate in the upper front wall of the hose bed. One (1) each side equally spaced from the outside of the hose bed. Switched with the work light switch in cab. | 523 |
| 5390-0163 | ROM V4 LED strip lights for NFPA hose bed lighting. The lights to be mounted inside hose bed cover thru cover plate on outer skin. Light will illuminate the hose bed area thru slots in the inner skin. | 1871 |
| 5390-0164 | Whelen 900 series model 9SC0ENZR Super LED Opti-Scene light (PR) with weatherproof connectors. Switch in cab (driver and officer side lights switched separately). Locate [#LOC]. | 1870 |
| 5390-0165 | Whelen 900 series model 9SC0ENZR Super LED Opti-Scene light (PR) with diamond plate mounting box. Switch in cab (driver and officer side lights switched separately). Locate [#LOC]. | 2067 |
| 5390-0166 | FRC LED900 Scene light (EA). Switch in cab (driver and officer side lights switched separately). Locate [#LOC]. | 931 |
| 5390-0168 | Hosebed light Trucklite model 44 LED (5). Locate equally spaced on upper front wall of hosebed . Switched with work light switch in cab. | 1220 |
| 5390-0169 | Deck light FireTech model FT-WL3500-60 LED (PR). Switched with work light switch in cab. Location: [#LOC]. | 862 |
| 5390-0170 | Whelen M6 Linear Super LED scene light (EA). Switched in cab (lights mtd on the sides of apparatus to be switched separately). Locate [#LOC]. | 666 |

| Item No. | Description | |
|---|---|---|
| 5390-0171 | Whelen M6 Linear Super LED hosebed lights (PR) with weatherproof connectors and smooth plate mounting boxes painted Durabak black. Locate equally spaced each side at the front area of hosebed. Switched with worklight switch in cab. | 1574 |
| 5390-0172 | Amdor Lumbar H2O LED strip lights for NFPA hose bed lighting. The lights to be mounted inside hose bed cover thru cover plate on outer skin. Light will illuminate the hose bed area thru slots in the inner skin. | 1871 |
| 5390-0173 | Federal Signal model 64LEDSCENE LED scene light (PR) with weatherproof connectors. Includes switch accessible to driver (driver and officer side lights switched separately). Locate [#LOC]. | 1158 |
| 5390-0175 | Light Whelen Pioneer Plus model PFP1 with pedestal side mount. Switched with work light switch in cab. Location(s): [#LOC]. | 3402 |
| 5390-0176 | Hose bed light ROM V4 LED 42-72" long. Locate forward area of hose bed up high. Switched with work light switch in cab. | 499 |
| 5390-0177 | Crosslay light ROM V4 LED 42-72" long. Locate in module at cross lays. Switched with work light switch in cab. | 499 |
| 5390-0178 | Light Whelen PFBP6C LED. Locate above L2 on compartment top. Switched through ignition. | 547 |
| 5390-0179 | Crosslay lights EON (4). Locate evenly spaced up high on back of cab to illuminate crosslays. | 527 |
| 5390-0180 | Crosslay light Truck-Lite LED model 81380. Locate on the forward upper surface of the pump module over the speedlay module to light from above during hose loading operations. Switched with work light switch in cab. | 230 |
| 5390-0181 | Whelen M6 series gradient Super LED scene lights (PR) with weatherproof connectors. To be used as cornering lights wired to turn signals and four way flashers. Location: [#LOC]. | 1655 |
| 5390-0182 | Crosslay light Amdor H2O. Locate at the front body above crosslay. Switched with work light switch in cab. | 540 |
| 5390-0183 | Crosslay light Truck-Lite LED model 81380. Locate on front of body up high. Switched with work light switch in cab. | 230 |
| 5390-0184 | FireTech 8" 12V double stack mini brow light (PR). Includes switch in cab (driver and officer side facing lights switched separately). Location: [#LOC]. | 2255 |
| 5390-0185 | Hose bed light Federal Signal 64LEDSCENE. Locate at the front area of hose bed. Switched with work light switch in cab. Includes diamond plate mounting box. | 690 |
| 5390-0186 | FRC SPA900-Q70 Scene light (PR). Switch in cab (driver and officer side lights switched separately). Locate [#LOC]. | 1861 |
| 5390-0187 | Whelen 900 series model 9SC0ENZR Super LED Opti-Scene light (1 EA) with weatherproof connector. Switch in cab (driver and officer side lights switched separately). Locate [#LOC]. | 936 |
| 5390-0188 | Diamond plate mounting boxes (4). For use with scene lights and/or warning lights. Locate on driver and officer side forward and rearward compartment tops outboard; boxes to be full depth of compartment top. | 978 |
| 5390-0191 | Whelen M9 Linear Super LED scene lights (EA). Switched in cab (lights mtd on the sides of apparatus to be switched separately). Locate [#LOC]. | 925 |
| 5390-0193 | FRC SPA900-Q70 Scene light (PR) with diamond plate mounting box. Switch in cab (driver and officer side lights switched separately). Locate [#LOC]. | 2058 |
| 5390-0194 | Whelen PELCC crosslay lights LED (PR). Wired through work light switch. Location: (1) each side up high back of cab. | 685 |
| 5390-0196 | FireTech 8" 12V double stack mini brow light (PR) powder coated black. Includes switch in cab (driver and officer side facing lights switched separately). Location: [#LOC]. | 2255 |
| 5390-0197 | Deck light FireTech model FT-WL3500-60-C driver FT-WL3500-60 officer LED (PR). Driver includes rear camera; requires Vista display. Switched with work light switch in cab. Location: [#LOC]. | 1657 |
| 5390-0198 | Hose bed light FRC LED model SPA900-Q70. Locate at front of hose bed. Switched with work light switch in cab. | 930 |
| 5390-0199 | Whelen 700 series gradient Super LED scene lights (PR) with LH37101 castings and weatherproof connectors. Switch in cab (driver and officer side lights switched separately). Locate [#LOC]. | 1198 |
| 5390-0200 | Federal Signal Commander model COM7K-900 scene light (PR). Switch in cab (driver and officer side lights switched separately). Locate [#LOC]. | 1861 |
| 5390-0201 | Hosebed light Whelen model 3SC3CDCR 3" LED. Locate even spaced on upper front wall center hosebed. Switched with work light switch in cab. | 573 |
| 5390-0202 | Code3 model 79SC LED scene light (PR) with chrome bezel (as applicable) and weatherproof connectors. Switch in cab (driver and officer side facing lights switched separately). Locate [#LOC]. | 1298 |
| 5390-0203 | Hosebed light Trucklite LED. Locate even spaced on front wall of hosebed. Switched with work light switch in cab. | 732 |
| 5390-0204 | Whelen M7 Linear Super LED scene lights (PR). Switched in cab (lights mtd on the sides of apparatus to be switched separately). Locate [#LOC]. | 763 |
| 5390-0205 | Code3 model 79SCBZ LED scene light (PR) with weatherproof connectors. Switch in cab (driver and officer side facing lights switched separately). Locate [#LOC]. | 1298 |
| 5390-0207 | FRC SPA900-Q70 Scene light (EA). Switch in cab (driver and officer side lights switched separately). Locate [#LOC]. | 930 |

| Item No. | Description | |
|---|---|---|
| 5390-0208 | Whelen M6 Linear Super LED scene light in a diamond plate box (EA). Switched in cab (lights mtd on the sides of apparatus to be switched separately). Locate [#LOC]. | 666 |
| 5390-0211 | Hosebed light Whelen M6 Linear Super LED scene light with diamond plate box. Locate at the front area of hosebed. Switched with worklight switch in cab. | 722 |
| 5390-0214 | Federal Signal model 64LEDSCENE LED scene light (PR) with diamond plate mounting box and weatherproof connectors. Includes switch accessible to driver (driver and officer side lights switched separately). Location: [#LOC]. | 1336 |
| 5390-0215 | Deck Lights - Optronics Model TLL44 (PR). Location: [#LOC]. | 401 |
| 5390-0216 | Hose bed light Optronics LED model TLL44 Locate at front of hose bed. Switched with work light switch in cab. | 230 |
| 5390-0217 | Crosslay light Optronics LED model TLL44. Locate to rear of crosslay (SM) and forward of crosslay (TM as applicable). Switched with work light switch in cab. | 230 |
| 5390-0218 | Hose bed light EON (4) with rubrail extrusion. Locate at front area of hose bed. Switched with work light switch in cab. | 667 |
| 5390-0219 | Hosebed light FireTech model FT-MB-9-TR powder coated black with trunnion mount. Switched with work light switch in cab. | 784 |
| 5390-0220 | Whelen 700 series gradient Super LED scene lights (PR) with weatherproof connectors and diamond plate mounting box. Switch in cab (driver and officer side lights switched separately). Locate [#LOC]. | 1273 |
| 5390-0221 | Whelen M6 Linear Super LED scene lights (PR) with black bezels. Switched in cab (lights mtd on the sides of apparatus to be switched separately). Locate [#LOC]. | 1329 |
| 5390-0222 | Deck light FireTech model FT-WL3500-60-W LED (PR). Switched with work light switch in cab. Location: [#LOC]. | 862 |
| 5390-0223 | Hose bed light LED Rigid-Dually D2 model 50151with defussed lens. Locate at front of hose bed. Switched with work light switch in cab. | 698 |
| 5390-0224 | Crosslay light LED Rigid-Dually D2 model 50151with defussed lens. Locate to rear of crosslay (SM) and forward of crosslay (TM as applicable). Switched with work light switch in cab. | 698 |
| 5390-0227 | Crosslay light LED TecNiq model P06-WBFP-1. Locate to rear of crosslay (SM) and forward of crosslay (TM as applicable). Switched with work light switch in cab. | 201 |
| 5400-0003 | Engine compartment light (EA). | 143 |
| 5400-0004 | Incandescent pump panel light - additional (EA). Location: [#LOC]. | 107 |
| 5400-0005 | Pump panel LED light package with (2) Whelen strip lights per side pump panel. Not available on panels over 45" wide. Side mount only. | 896 |
| 5400-0006 | Pump panel LED light package with (3) lights per side pump panel. Pump panels over 45" may require additional lights. Side mount only. | 1286 |
| 5400-0007 | LED pump panel light - additional (EA). Location: [#LOC]. | 221 |
| 5400-0008 | (1) pump panel light over the pump control area to be wired to come on when pump shift is placed in pump. (Side mount forward light noted Top Mount is center light.) | 46 |
| 5400-0009 | Pump panel LED light package - top mount. Includes (2) lights per side pump panel and (3) lights for top mount panel. Side pump panels over 45" wide may require additional lights. Top mount only. | 1505 |
| 5400-0010 | Incandescent pump compartment light (EA). | 154 |
| 5400-0011 | LED pump compartment light (EA). | 414 |
| 5400-0020 | Federal NightFighter light with internal pole. Locate [#LOC]. Switched on light head. | 1433 |
| 5400-0021 | Federal NightFighter Light with External Pole. Locate [#LOC]. Switched on light head. | 2480 |
| 5400-0030 | Fog Lights Quartz Halogen (PR) [#COL] and located [#LOC]. | 313 |
| 5400-0031 | Pair of Cab Dome Large Lights mounted driver and officer side front. N/A on E-One Chassis. Required on Comm Chassis. | 85 |
| 5400-0032 | Pair of Cab Dome Large Lights mounted driver and officer side Rear. N/A on E-One Chassis or two door commercial chassis. Required on Comm Chassis. | 85 |
| 5400-0033 | Cab Dome Lts Red/White 4" incandescent. White light wired through door and light assembly mounted rocker switch. Red light through light assembly mounted rocker switch. | 643 |
| 5400-0035 | Dome Lts White 4" incandescent. Includes assembly mounted rocker switch. Requires one for each cab door. | 174 |
| 5400-0037 | Dome Lts Red/White Incandescent. Package includes two lights mounted in the front and two mounted in the rear of the cab. White light wire through door and light assembly mounted switch. Red light through light assembly mounted switch. | 617 |
| 5400-0038 | Spotlights 6" Unity (PR) cab post mount. | 506 |
| 5400-0039 | Spotlight Specialty 2150 hand held located on officer's side of cab dash - hardwired. | 433 |
| 5400-0041 | Spotlight Federal Visibeam II Remote. If one is selected it will be located centered on cab roof mounted on a bracket. If two are selected they will be located one each side of cab roof to rear of light bar. | 763 |
| 5400-0042 | Map light Sunnex [#LOC]. | 371 |
| 5400-0043 | Maplight-Little Lt 18" Flex [#LOC]. Includes on/off switch. | 250 |
| 5400-0047 | Pump panel light package with (3) lights per side pump panel. Pump panels over 45" may require additional lights. Side mount only. | 723 |

| Item No. | Description | |
|---|---|---|
| 5400-0048 | Pump panel light package - top mount. Includes (2) lights per side pump panel and (3) lights for top mount panel. Top mount only. | 840 |
| 5400-0054 | Spotlight Specialty 2150 hand held located on officer's side of cab dash w/12V receptacle. | 433 |
| 5400-0057 | Dome lts red/white 4" LED (4). Lights to be located two front and two rear. White light wired through door and light assembly mounted rocker switch. Red light through light assembly mounted rocker switch. | 1665 |
| 5400-0060 | Spotlight Specialty 2150 hand held located on driver's side 3 x 3 post - hardwired. | 433 |
| 5400-0061 | Golight model 2049 remote control spotlight with black housing. If one is selected it will be located centered on cab roof on a pedestal to rear of light bar. If two are selected they will be located one each side of cab roof to rear of light bar. | 953 |
| 5400-0062 | Code 3 model GLB3200 remote control spotlight with black housing. If one is selected it will be located centered on cab roof on a pedistal to rear of lightbar. If two are selected they will be located one each side of cab roof to rear of lightbar. | 1362 |
| 5400-0064 | Dome Lts Red/White 4" LED (5). Lights to be located two front and three rear. White light wired through door and light assembly mounted rocker switch. Red light through light assembly mounted rocker switch. | 2078 |
| 5400-0065 | Map light Littlite 18" flexible LED. Location: [#LOC]. | 287 |
| 5400-0068 | Pump panel LED light package with (3) Whelen 500 lights per side pump panel. Center light on each side to be wired through pump engage. Side mount only. | 1393 |
| 5400-0069 | Map light Sunnex HS 761-00 with frosted lens. Location: Officer overhead console inboard of AC vent. | 323 |
| 5400-0070 | Whelen 700 Series cornering lights (PR) located on ends of bumper gravel shield ahead of warning lights. Lights to have 8-32 degree internal optics and chrome flange. Includes cornering light relay circuits. | 827 |
| 5400-0071 | Spotlight Collins CL-12-M hand held located on officer's side of cab dash hardwired. Includes Handlelok 1004 bracket. | 522 |
| 5400-0074 | Pump panel LED light package. Includes (2) Whln LED strip lights driver side above upper panel (2) Whln LED strip lights officer side mid-way up on upper hinged panel (2) 4" grommet mount lights on driver side front compt face (1) in line with side discharges and (1) at upper pump panel split and (1) 4" grommet mount light on officer side front compt face down low. | 2262 |
| 5400-0075 | Dome Lts Red/White LED/Incandescent. Package includes two red/white incandescent lts mtd in the frt of the cab and two 4'' red/white LED lts mtd in the rear of the cab. White lt wired through door and lt assy mounted switch. Red lt wired through lt assy mounted switch. | 1141 |
| 5400-0076 | Golight model 2020 permanent spotlight. Location: Centered top of lightbar. | 755 |
| 5400-0080 | FRC Night Master light with external push-up pole. Locate [#LOC]. Switched on light head. | 1372 |
| 5400-0081 | Golight model 2067 remote control spot light with white housing. If one is selected it will be located centered on cab roof on a pedestal to rear of light bar. If two are selected they will be located one each side of cab roof to rear of light bar. | 953 |
| 5400-0082 | Maplight-Little Lt 18" Flex [#LOC]. Includes dimmer switch. | 250 |
| 5400-0083 | Map light Sunnex HS 761-20 with red lens and dimmer switch. Location: Officer overhead console inboard of AC vent. | 323 |
| 5400-0084 | SpotLt-Fed VisibeamII Remote. If one is select it will be located center on forward vista roof. If two are selected they will be located one each side front corners of vista cab roof. | 763 |
| 5400-0085 | Enclose pump panel LED light package with (3) lights per side pump panel. Side mount only. | 1715 |
| 5400-0086 | Spotlight Specialty 2150 hand held located on font of map box - hardwired. | 433 |
| 5400-0087 | Map light Sunnex model HS741-27 with red lens. Location: [#LOC]. | 345 |
| 5400-0089 | Federal Signal Ultrastar Green LED w/ clear lens. Locate on L1 on compt top. Includes switch on pump panel labeled "Hydrant". | 755 |
| 5400-0090 | Spotlight Specialty 2150 hand held located on officer's side 3 x 3 post - hardwired. | 433 |
| 5400-0091 | Zico cornering light (PR) with polished stainless steel housing model #ZQL-SS-H7614 wired through turn signals. Includes cornering light relay. Lights to be directed downward. Location: (1) each side of gravel shield (forward). | 1134 |
| 5400-0092 | Weldon pump panel LED light package with (3) lights per side pump panel. Pump panels over 45" may require additional lights. Side mount only. | 1049 |
| 5400-0097 | Maplight-Havis Shield 12" Flex LED. Location: [#LOC]. | 278 |
| 5400-0098 | Pump panel LED light package with (3) Whelen 4"round lights per side pump panel. Pump panels over 45" may require additional lights. Side mount only. | 1286 |
| 5400-0104 | Spotlight Specialty 2150 hand held located on officer's side side facing engine cover offset forward below cab dash - hardwired. | 433 |
| 5400-0105 | Weldon pump panel LED lighting package with (3) lights for pump operator panel (with shield) and (3) lights for rear pump panel. Rear Mount only. | 519 |
| 5400-0106 | Pump panel incandescent lighting package with (3) lights for pump operator panel (with shield) and (3) lights for rear pump panel. Rear Mount only. | 723 |
| 5400-0107 | Weldon pump panel LED light package - top mount. Includes (2) lights per side pump panel and (3) lights for top mount panel. Side pump panels over 45" wide may require additional lights. Top mount only. | 1183 |

| Item No. | Description | |
|---|---|---|
| 5400-0109 | Weldon LED pump panel light - additional (EA). Location: [#LOC]. | 164 |
| 5400-0111 | Whelen 600 series Super LED blue. Locate driver side rear compartment face below upper level warning. Includes switch on pump panel labeled "HYDRANT". | 573 |
| 5400-0112 | Backing light (PR) Innovative LIghting with polished housing model #580-0200-1 light bulb is a halogen MR16. Location: [#LOC]. | 405 |
| 5400-0125 | SpotLt-Fed VisibeamII Remote. Officer side of cab roof to rear of lightbar mounted on a bracket. | 763 |
| 5400-0126 | Side mount pump module LED lighting. Includes (3) pump panel lights - (2) driver side and (1) officer side. | 417 |
| 5400-0127 | Top mount pump module LED lighting. Includes (3) lights located along the upper top mount control panel (2) side pump panel lights - (1) driver side and (1) officer side and (2) top mount walkway lights. | 954 |
| 5400-0129 | Spotlight Collins CL-12-M hand held located on officer's side of cab dash - hardwired. Includes Handlelok 1004 bracket shipped loose. | 522 |
| 5400-0130 | Spotlight Optronics Blue Eye model KB4003 hand held located on officer's side of cab dash - hardwired. | 259 |
| 5400-0131 | Pump panel LED light package Amdor Luma Bar H2O. Includes (1) light per side pump panel (2 driver if split panel). Side mount only. | 1050 |
| 5400-0132 | Incandescent pump panel and runningboard lighting package. Includes (3) lights shield mounted on the driver side and (1) 4" recessed light mounted on the officer side compartment face. | 723 |
| 5400-0133 | Golight model 2067 remote control spotlight with white housing. Locate (1) each side cab corner outboard of forward facing lightbar without pedestal. Requires additional side facing warning lights to meet NFPA. | 953 |
| 5400-0137 | Pump panel LED light package for side mount eMAX. Includes (6) TecNiq EON lights with S/S housings located (3) each side above lower side intake/discharge panels. Includes S/S light shields. SM eMAX only. | 428 |
| 5400-0139 | Pump panel LED light package for top mount. Includes (12) TecNiq EON lights with S/S housings (6) for TM panel and (3) each side for lower side intake / discharge panels. Includes S/S light shields for side panels. | 764 |
| 5400-0145 | Pair of Cab Dome Large Lights mounted driver (clear) and officer (red) side front. N/A on E-One Chassis. Required on Comm Chassis. | 85 |
| 5400-0148 | Maplight-Little Lt 12" Flex LED. Location: [#LOC]. | 287 |
| 5400-0149 | Pump panel Amdor H2O LED light package with (3) lights per side pump panel. Pump panels over 45" may require additional lights. Side mount only. | 1058 |
| 5400-0151 | Pump compartment light EON LED. Wired to work light. | 247 |
| 5400-0154 | Spotlight Specialty 2150 hand held located on center of cab dash with plug-in connector. | 433 |
| 5400-0155 | Cab Dome Large Light (PR). (1) mounted centered centered in the front and rear headliners. N/A on E-0ne Chassis. Required on Comm Chassis. | 85 |
| 5400-0156 | Spotlight Collins CL-12-M handheld. Light to be hardwired and bracket (Handlelok 1004) to be mounted to the rear of the center console. | 522 |
| 5400-0157 | Spotlight Whelen PAR46 Super LED hand held located on officer's side of cab dash - hardwired. Mounted to not obstruct driver view of passenger corner mounted mirror (if equipped). | 710 |
| 5400-0158 | Spotlights 6" Unity LED (EA) cab post mount. Location: Officer side cab A post. | 590 |
| 5400-0159 | Optronics model QH-100 handheld 12v spotlight. To be hardwired on officer's side of cab dash. | 168 |
| 5400-0164 | Spotlights 6" Unity LED (PR) cab post mount. | 1178 |
| 5400-0165 | Pump compartment light EON LED. Light shall be switched from the cab dash with the work light switch. | 247 |
| 5400-0166 | Fog lights (PR) Perlux 500 series model 05001-5 clear fog Light located [#LOC]. | 678 |
| 5400-0167 | (1) pump panel light over the pump control area to be wired to come on when pump shift is placed in pump. (Rearward light.) | 46 |
| 5400-0168 | Whelen LED pump compartment light (EA). | 314 |
| 5400-0171 | Compartment light EON LED IPOS. Location of light(s): [#LOC]. | 162 |
| 5400-0172 | Pump panel LED light package for rear mount. Includes (3) Tecniq EON lights with S/S housings. Includes S/S light shield. Rear mount only. | 342 |
| 5400-0173 | Spotlight Whelen PAR46 Super LED hand held located on officer's side of cab dash with plug-in connector. | 710 |
| 5400-0174 | Pump panel light package with (3) On Scene Solutions lights per side pump panel. Pump panels over 45" may require additional lights. Side mount only. | 1221 |
| 5400-0180 | Spotlight Collins CL-12-M hand held located on officer's side of cab dash hardwired. Includes Handlelok 1004 bracket which shall be mounted at time of final inspection. | 522 |
| 5400-0181 | Pump panel LED light package for side mount. Includes (6) Tecniq EON lights with S/S housings located (3) ea side. The center light shall be green as wired to activate when pump shift is placed in pump. Includes S/S light shields. Requires separate pump panel light wiring instruction. | 428 |
| 5400-0182 | (1) pump panel light (center light) over the pump control area to be wired to come on when pump shift is placed in pump. | 46 |

| Item No. | Description | |
|---|---|---|
| 5400-0183 | Side mount pump module LED lighting. Includes (3) pump panel lights - (2) driver side and (1) officer side. | 507 |
| 5400-0184 | Top mount pump module LED lighting. Includes (3) lights located along the upper top mount control panel (2) side pump panel lights - (1) driver side and (1) officer side and (2) top mount walkway lights. | 718 |
| 5400-0185 | LED pump compartment light (EA). | 77 |
| 5400-0186 | Interior rescue module dome light Red/White LED (PKG). Package includes (4) TecNiq model E06-WS0R-1 red/white LED lights evenly spaced on ceiling. Includes (1) switch for red and (1) for white lights on interior wall. | 909 |
| 5400-0187 | Map light Sunnex HS 761-00 with frosted lens. Location: Driver and officer overhead console inboard. | 323 |
| 5400-0188 | Golight model 30201 remote control HID spot light with white housing. If one is selected it will be located centered on cab roof on a pedestal to rear of light bar. If two are selected they will be located one each side of cab roof to rear of light bar. | 1037 |
| 5400-0189 | Golight model 2020 permanent spotlight with white housing. Centered on forward cab roof. | 953 |
| 5400-0190 | Weldon/EON pump panel LED light package with (1) Weldon (2) EON driver pump panel and (3) Weldon officer pump panel. Pump panels over 45" may require additional lights. Side mount only. | 1049 |
| 5400-0191 | Class 1 provided / E-ONE installed pump panel and ground lights for pump module. Includes (1) 18" LED strip light (2) 24" LED strip light and (2) ground lights. | 930 |
| 5400-0192 | Amdor H2O pump panel LED light package - top mount. Includes (2) lights per side pump panel and (3) lights for top mount panel. Side pump panels over 45" wide may require additional lights. Top mount only. | 1225 |
| 5400-0194 | (1) pump panel light (center light) over each side mount pump control area to be wired to come on when pump shift is placed in pump. | 91 |
| 5400-0196 | TecNiq LED backing lights (PR) model E960. Location: [#LOC]. | 491 |
| 5400-0198 | Map light Sunnex LED model SL9-220. Location: [#LOC]. | 798 |
| 5400-0199 | Pump panel light additional EON LED. Locate (2) driver side up high and (2) officer side up high. | 132 |
| 5400-0200 | Spotlights 6" Unity LED (PR) cab post mount. Includes black housings. | 1178 |
| 5400-0202 | Spotlight Whelen PAR46 Super LED hand held located on officer's side of cab dash - hardwired. Ship bracket loose. | 710 |
| 5400-0204 | Map light Sunnex HS 761-00 with frosted lens. Location: officer overhead console inboard. | 323 |
| 5400-0205 | Pump panel light additional EON LED. Locate driver side pump panel above additional switches wired through park brake. | 132 |
| 5400-0206 | Golight model 2067 remote control spotlight with white housing. Locate driver side cab roof ahead of vista. Locate controller center of dash offset to driver. | 953 |
| 5400-0207 | Weldon pump panel LED light package with (3) lights on officer side pump panel. Pump panels over 45" may require additional lights. Side mount only. For use with driver enclosed pump panel only. | 525 |
| 5400-0208 | Pump panel Amdor H2O LED light package with (2) lights per side pump panel. Side mount only. | 706 |
| 5400-0209 | Pump panel Amdor H2O LED red light package with (3) lights per side pump panel. Pump panels over 45" may require additional lights. Side mount only. | 1058 |
| 5400-0210 | Fog Lights FireTech FT-WL3500-60 (PR). Location: [#LOC]. | 1109 |
| 5400-0211 | Whelen 600 series Super LED green. Locate driver side rear of body below upper level warning. Includes switch on pump panel labeled "HYDRANT". | 676 |
| 5400-0212 | Pump compartment light EON LED. Requires seperate switching. | 247 |
| 5400-0213 | Map light Sunnex SL9-200B10L. Location: officer overhead console inboard. | 500 |
| 5400-0214 | Walkway lighting in place of standard. Nine(9) equally spaced Whelen 0S Series Super-LED white illumination lights shall be provided with a 45 degree bezel. | 260 |
| 5400-0216 | Golight model 20214 remote control LED spot light with black housing. Officer side rear of light bar. | 1439 |
| 5400-0218 | Golight model 20214 remote control LED spot light with black housing. If one is selected it will be located centered on cab roof on a pedestal to rear of lightbar. If two are selected they will be located one each side of cab roof to rear of lightbar. | 1439 |
| 5400-0219 | EON LED pump panel light - additional (EA). Location: [#LOC]. | 78 |
| 5400-0223 | LED pump panel light - additional amber (EA). Location/function: center above pump operator panel wired through pump shift only. | 164 |
| 5450-0003 | Quartz light KwikRaze 500W/110V model KR-905-I with internal telepole. Location(s): [#LOC] | 772 |
| 5450-0004 | Quartz light KwikRaze 500W/110V model KR-SB-505-W/2-I with external telepole. Location(s): [#LOC] | 1212 |
| 5450-0005 | Quartz light Kwik Raze 500W/110V portable. Location(s): [#LOC]. | 491 |
| 5450-0006 | Quartz light KwikRaze 500W/110V model KR-SB-805-TM-I with external mount tripod telepole. Requires 110V receptacle. Location(s): [#LOC] | 1798 |
| 5450-0007 | Quartz light Kwik Raze 500W/110V with recess mount. Location(s): [#LOC]. | 1119 |
| 5450-0008 | Quartz light Fire Research Focus 750W/110V model FCA510E-S75-SW with internal pull-up pole. Location(s): [#LOC]. | 1708 |

| Item No. | Description | |
|---|---|---|
| 5450-0009 | Quartz light Fire Research Focus 750W/110V model FCA530-S75-SR-SW with side mount push-up pole. Location(s): [#LOC]. | 1806 |
| 5450-0010 | Quartz light Fire Research Focus 1000W/240V model FCA200-M12 with recess mount. Location(s): [#LOC]. | 960 |
| 5450-0011 | Quartz light Fire Research Optimum 900W/240V model OPA200-R90 with recess mount. Location(s): [#LOC]. | 1255 |
| 5450-0012 | Quartz light Fire Research Focus 750W/110V model FCA570-S75 without pole. Location(s): [#LOC]. | 1332 |
| 5450-0015 | Quartz light Fire Research Focus 750W/120V model FCA600-S75-ON-FC603 with 40" telescopic tripod pole. Location(s): [#LOC]. | 1827 |
| 5450-0016 | Quartz light Fire Research Focus 750W/110V model FCA540-S75-SW with side mount pull up pole. Location(s): [#LOC]. | 1775 |
| 5450-0019 | Quartz light Fire Research Focus 750W/110V model FCA802-S75-01 with brow mount (EA). Location(s): [#LOC]. | 1033 |
| 5450-0020 | Quartz light Fire Research Focus 1500W/240V model FCA600-M15-ON-FC603 with telescopic tripod pole. Location(s): [#LOC]. | 1926 |
| 5450-0021 | Quartz light Fire Research Optimum 750W/110V model OPA570-S75 without pole. Location(s): [#LOC]. | 1412 |
| 5450-0022 | Quartz light Fire Research Optimum 150W/12V model OPA802-HD15-01 with brow mount (EA). Includes switch accessible to driver. Location(s): [#LOC]. | 1742 |
| 5450-0023 | Quartz light Fire Research Optimum 150W/12V model OPA510E-HD15-SW with internal pole. Includes switch accessible to driver. Location(s): [#LOC]. | 2085 |
| 5450-0024 | Quartz light Fire Research Optimum 750W/110V model OPA510E-S75-SW with internal pull up pole. Location(s): [#LOC]. | 1761 |
| 5450-0028 | Quartz light Fire Research Optimum 750W/110V model OPA530-S75-SR-SW with side mount external pole. Location(s): [#LOC]. | 1856 |
| 5450-0030 | Quartz light Fire Research Optimum 750W/110V model OPA600-S75-ON-OP603 with 40" telescopic tripod pole. Location(s): [#LOC]. | 1846 |
| 5450-0031 | Quartz light Fire Research Optimum 750W/110V model OPA802-S75-01 with brow mount (EA). Location(s): [#LOC]. | 1105 |
| 5450-0032 | Quartz light Fire Research Optimum 900W/240V model OPA600-R90-ON-OP603 with telescopic tripod pole. Location(s): [#LOC] | 1962 |
| 5450-0033 | Quartz light Fire Research Optimum 150W/12V model OPA530-HD15-SR-SW with side mount external pole. Includes switch accessible to driver. Location(s): [#LOC]. | 2328 |
| 5450-0034 | Quartz light MagnaFire 900W/240V model KR-739-HD with portable base. Requires 220V receptacle. Location(s): [#LOC] | 720 |
| 5450-0035 | Quartz light MagnaFire 900W/240V model KR-1939 with recess mount. Location(s): [#LOC]. | 994 |
| 5450-0036 | Quartz light MagnaFire 900W/240V model KR-SB-639 without pole. Location(s): [#LOC]. | 1153 |
| 5450-0037 | Quartz light MagnaFire 900W/240V model KR-939-I with internal pole. Location(s): [#LOC]. | 1096 |
| 5450-0038 | Quartz light MagnaFire 900W/240V model KR-SB-539-W/2-I with external pole. Location(s): [#LOC]. | 1434 |
| 5450-0039 | Quartz light MagnaFire 900W/240V model KR-SB-839-TM-I with external mount tripod telepole. Requires 220 volt receptacle. Location(s): [#LOC]. | 1560 |
| 5450-0040 | Quartz light MagnaFire 900W/240V model KR-1339 with low profile mount. Location(s): [#LOC] | 1139 |
| 5450-0041 | Quartz light MagnaFire 900W/240V model KR-1539 with cab brow mount (EA). Not available in front center due to DOT lights. Location(s): [#LOC]. | 1011 |
| 5450-0045 | Quartz light MagnaFire 750W/120V model KR-736-HD with portable base. Requires 110V receptacle. Location(s): [#LOC] | 665 |
| 5450-0046 | Quartz light MagnaFire 750W/120V model KR-1936 with recess mount. Location(s): [#LOC]. | 1032 |
| 5450-0047 | Quartz light MagnaFire 750W/120V model KR-SB-636 without pole. Location(s): [#LOC]. | 1194 |
| 5450-0048 | Quartz light MagnaFire 750W/120V model KR-936-I with internal pole. Location(s): [#LOC]. | 1183 |
| 5450-0049 | Quartz light MagnaFire 750W/120V model KR-SB-536-W/2-I with external pole. Location(s): [#LOC]. | 1504 |
| 5450-0050 | Quartz light MagnaFire 750W/120V model KR-SB-836-TM-I with external mount tripod telepole. Requires 110V receptacle. Location(s): [#LOC]. | 1733 |
| 5450-0051 | Quartz light MagnaFire 750W/120V model KR-1336 with low profile mount. Location(s): [#LOC] | 1063 |
| 5450-0052 | Quartz light MagnaFire 750W/120V model KR-1536 with cab brow mount (EA). Location(s): [#LOC]. | 939 |
| 5450-0056 | Quartz light KwikRaze 1500W/220V model KR-SB-815-TM-I with external mount tripod telepole. Requires 220V receptacle. Location(s): [#LOC] | 1863 |
| 5450-0058 | Quartz light Fire Research Optimum 1500W/240V model OPA510E-M15-SW with internal pull-up pole. Location(s): [#LOC]. | 1881 |
| 5450-0059 | Quartz light Fire Research Optimum 750W/110V portable model OPA700-S75-OP703. Location(s): [#LOC]. | 941 |
| 5450-0060 | Quartz light Fire Research Focus 750W/120V model FCA300U-S75 with brow mount. Location: Center of cab brow. | 1033 |
| 5450-0063 | Quartz light Fire Research Optimum 900W/240V model OPA530-R90-SR-SW with bottom raise pole. Location(s): [#LOC]. | 1856 |
| 5450-0064 | Quartz light Fire Research Focus 500W/120V model FCA200-S50 with recess mount. Location(s): [#LOC]. | 1052 |

| Item No. | Description | |
|---|---|---|
| 5450-0065 | Quartz light Fire Research Optimum 1000W/240V model OPA656-M12-ON-OP603 with telescopic tripod pole. Location(s): [#LOC] | 1962 |
| 5450-0066 | Quartz light Fire Research Optimum 1500W/240V model OPA512-M15-SW with internal thru roof push up pole. Location(s): [#LOC] | 1960 |
| 5450-0067 | Quartz light Fire Research Focus 500W/110V model FCA802-S50-01 with brow mount (EA). Light head and mount to be powder coated black. Location(s): [#LOC] | 1006 |
| 5450-0068 | Quartz light MagnaFire 750W/120V model KR-SB-436-I-XL with through ceiling push up pole (PR). Outer pole to be 12" inner pole to be 48". Both lights to be on one breaker. Includes support tubes on interior of cab and switch each side on rear cab wall to control lights. Location: One each side rear corner of cab roof. | 3548 |
| 5450-0069 | Quartz light MagnaFire 5000 500W/120V model KR-2555 with cab brow mount (EA). Location(s): [#LOC]. Not available in front center due to DOT lights. | 831 |
| 5450-0070 | Quartz light MagnaFire 5000 500W/120V model KR-SB-555-W/2-I with external pole. Location(s): [#LOC]. | 1303 |
| 5450-0071 | Quartz light Fire Research Optimum 750W/110V model OPA200-S75 with recess mount. Location(s): [#LOC]. | 1124 |
| 5450-0073 | Quartz light Fire Research Focus 750W/120V model FCA300U-S75 with brow mount. Light head and mount to be powder coated black. Location: Center of cab brow. | 1087 |
| 5450-0074 | Quartz light timer (ea). | 158 |
| 5450-0075 | Quartz light Fire Research Optimum 900W/240V model OPA510E-R90-SW with top raise pole. Location(s): [#LOC]. | 1856 |
| 5450-0076 | Quartz light MagnaFire 5000 750W/120V model KR-3556 with front cab brow mount (EA). Quest cabs only. Location(s): [#LOC]. | 939 |
| 5450-0078 | Quartz light Fire Research Focus 750W/110V model FCA802-S75-01 with brow mount (EA). Light head and mount to be powder coated black. Location(s): [#LOC] | 1087 |
| 5450-0079 | Quartz light MagnaFire 750W/120V model KR-1536 with cab brow mount (EA). Light head and mount to be powder coated black. Location(s): [#LOC]. | 993 |
| 5450-0081 | Quartz light Fire Research Optimum 750W/110V model OPA656-S75-ON-OP603 with 28" telescopic tripod pole. Location(s): [#LOC] | 1846 |
| 5450-0083 | Quartz light Fire Research Focus 1500W/240V model FCA530-M15-SR-SW with side mount push up pole. Location(s): [#LOC]. | 1812 |
| 5450-0084 | Quartz light Fire Research Focus 150W/12V model FCA510E-D15-SW with internal pole. Includes switch accessible to driver. Location(s): [#LOC]. | 1298 |
| 5450-0089 | Quartz light MagnaFire 900W/240V model KR-SB-539-W/2-I with external pole. Light head to be powder coated black. Location(s): [#LOC]. | 1488 |
| 5450-0091 | Quartz light Fire Research Optimum 900W/240V model OPA200-R90 with recess mount. Location(s): [#LOC]. Includes plate stand-off box to allow lights to recess without intruding into hosebed area. | 1384 |
| 5450-0092 | Quartz light Fire Research Focus 750W/110V model FCA530-S75-SR-SW with side mount push-up pole. Light head and mounts to be powder coated black. Location(s): [#LOC]. | 1860 |
| 5450-0094 | Quartz light Extenda-Lite 750W/110V model E-4750-EX-TL-UI-EX. Location(s): [#LOC]. | 983 |
| 5450-0095 | Quartz light Fire Research Focus 150W/12V model FCA300U-D15 with brow mount. Includes switch accessible to driver. Location: center of cab brow. | 1192 |
| 5450-0096 | Quartz light Fire Research Optimum 1000W/110V portable model OPA700-M10-OP703. Location(s): [#LOC]. | 1073 |
| 5450-0098 | Quartz light Fire Research Optimum 1500W/240V model OPA600-M15-ON-OP603 with telescopic tripod pole. Location(s): [#LOC] | 2040 |
| 5450-0099 | Quartz light Fire Research Optimum 1500W/240V model OPA200-M15 with recess mount. Location(s):[#LOC]. | 1146 |
| 5450-0102 | Quartz light Fire Research Focus 1000W/120V model FCA530-M10-SR-SW-ON with external push up pole. Location(s): [#LOC]. | 1926 |
| 5450-0114 | Quartz light Fire Research Focus 1000W/120V model FCA200-M10 with recess mount. Location(s): [#LOC]. | 960 |
| 5450-0115 | Light Whelen 12 volt Pioneer Plus model PFP1 with brow mount (EA). Includes switch in cab (driver and officer side facing lights switched separately). Location(s): [#LOC]. | 1777 |
| 5450-0116 | Quartz light Fire Research Focus 500W/110V model FCA600-S50-ON-FC603 with 40" telescopic tripod pole. Location(s): [#LOC]. | 1827 |
| 5450-0117 | Light Whelen Pioneer Plus model PFP2 12V with brow mount and PFLASH (EA). Includes switch in cab (driver and officer side facing lights switched separately). Location(s): [#LOC]. | 2714 |
| 5450-0118 | Quartz light Fire Research Focus 1000W/240V model FCA802-M12-01 with brow mount (EA). Location(s): [#LOC]. | 1096 |
| 5450-0121 | Quartz light Fire Research Focus 1500W/240V model FCA530-M15-SR-SW-ON with external push up pole. Location(s): [#LOC]. | 1830 |
| 5450-0122 | Light Whelen Pioneer Plus model PFP2 12V with brow mount (EA). Includes switch in cab accessible to driver (driver and officer side facing lights switched separately). Location(s): [#LOC]. | 2580 |

| Item No. | Description | |
|---|---|---|
| 5450-0123 | Light Whelen Pioneer Plus LED model PFP2 12V with PBAPEDD pedestal mount. Includes switch in cab (side facing lights switched separately). Location(s): [#LOC]. | 2553 |
| 5450-0124 | Light Whelen Pioneer model PFA2 with brow mount (EA). Includes switch in cab (driver and officer side facing lights switched separately). Location(s): [#LOC]. | 2074 |
| 5450-0125 | Quartz light MagnaFire 5000 750W/120V model KR-2556 with cab brow mount (EA). Location(s): [#LOC]. | 939 |
| 5450-0126 | Quartz light Fire Research Focus 750W/110V model FCA642-S75-ON-FC6F3 with 16.625" telescopic tripod pole. Location(s): [#LOC]. | 1827 |
| 5450-0127 | Quartz light Fire Research Focus 150W/12V model FCA802-H15-01 with brow mount (EA). Includes switch accessible to driver. Location(s): [#LOC] | 1685 |
| 5450-0128 | FRC quartz light head and bracket to be powdered coated job color (EA). Requires paint spray out sent to FRC for color matching. | 210 |
| 5450-0130 | Quartz light MagnaFire 750W/120V model KR-2556 with cab brow mount (EA). Location(s): [#LOC]. Not available in front center due to DOT lights. | 939 |
| 5450-0134 | Light Whelen Pioneer Plus model PFP2 12V with brow mount powder coated black (EA). Includes switch in cab (driver and officer side facing lights switched separately). Location(s): [#LOC]. | 2580 |
| 5450-0135 | Quartz light Fire Research Focus 150W/12V model FCA802-H15-01 with brow mount (EA). Light head and mount to be powder coated black. Includes switch accessible to driver. Location(s): [#LOC]. | 1735 |
| 5450-0136 | Light Whelen Pioneer Plus model PCP2 flood/spot with brow mount (EA). Includes switch in cab (driver and officer side facing lights switched separately). Location(s): [#LOC]. | 2602 |
| 5450-0138 | Light Whelen Pioneer Plus model PFP2AC with Quest brow mount (EA). Location(s): [#LOC]. | 2526 |
| 5450-0139 | Light Whelen Pioneer Plus model PFP1AC 120V with recess mount. Location(s): [#LOC]. | 1578 |
| 5450-0140 | Light Whelen Pioneer model PFA1 with pedistal mount. Includes switch in cab (driver and officer side facing lights switched separately). Location(s): [#LOC]. | 1702 |
| 5450-0141 | Quartz light Fire Research Optimum 150W/12V model OPA230-H15 with recess mount. Includes switch in cab console. Location(s): [#LOC]. | 1777 |
| 5450-0143 | Light Whelen 12V Pioneer model PFP2 with PBA203 recess mount. Includes switch accessible to driver (side facing lights switched separately). Location: [#LOC]. | 2454 |
| 5450-0144 | Fire Research FRC Evolution 12V LED scene light model FCA530-V15-SW-H with external push-up pole. Includes switch in cab accessible to driver. Location: [#LOC]. | 2616 |
| 5450-0145 | Light Whelen Pioneer Plus model PFP1 12V with recess mount. Includes switch accessible to driver (side facing lights switched separately). Location(s): [#LOC]. | 1524 |
| 5450-0153 | Light Whelen Pioneer Plus model PFP1 with bail mount. Includes switch in cab accessible to driver (side facing lights switched seperately). Location(s): [#LOC]. | 1524 |
| 5450-0154 | Fire Research Evolution 12V LED scene light model FCA510E-V15-SW with internal pull-up pole. Includes switch accessible to driver. Location: [#LOC]. | 2616 |
| 5450-0155 | Fire Research Evolution 12V LED scene light model FCA802-V15 with brow mount (EA). Includes switch accessible to driver (driver and officer side facing lights switched separately). Location: [#LOC]. | 2250 |
| 5450-0156 | Quartz light Fire Research Evolution 12V LED model FCA300U-V15 with brow mount. Includes switch accessible to driver. Location: center of cab brow. | 2171 |
| 5450-0158 | Light Whelen Pioneer model PFP2AC 120V with external bottom raise pole mount (ROM model KR-SB-5PFP2AC-W/2-I). Location(s): driver and officer side back of cab. | 2649 |
| 5450-0161 | Light Whelen 12V Pioneer model PCP2 with internal push-up pole mount (Havis KR-SB-4PCP2-S-I). Includes switch on light head. Location(s): [#LOC]. | 2642 |
| 5450-0162 | Light Whelen Pioneer Plus model PFP2AC 120V with brow mount (EA). Location(s): [#LOC]. | 2526 |
| 5450-0166 | Light Whelen Pioneer Plus model PFP2AC 120V with recess mount. Location(s): [#LOC]. | 2930 |
| 5450-0167 | Light Whelen Pioneer Plus model PFP2 12V with Quest brow mount (EA). Includes switch in cab accessible to driver (driver and officer side facing lights switched separately). Location(s): [#LOC]. | 2580 |
| 5450-0169 | Quartz light MagnaFire 750W/120V model KR-SB-836-TM-SL-I with external mount tripod telepole. Requires 110V receptacle. Location(s): [#LOC]. | 1733 |
| 5450-0170 | Fire Research Evolution 12V LED model FCA210-V12 with recess mount. Includes switch in cab accessible to driver. Location(s): [#LOC]. | 2075 |
| 5450-0171 | Light Whelen Pioneer model PFA1 with PBA103 recess mount. Includes switch accessible to driver. Location: [#LOC]. | 1524 |
| 5450-0172 | Light Whelen Pioneer Plus model PFP1 12V with vertical bail mount. Includes switch in cab accessible to driver (side facing lights switched seperately). Location(s): [#LOC]. | 1524 |
| 5450-0174 | Light Whelen Pioneer Plus model PFP1AC 120V with recess mount. Location(s): [#LOC]. | 1578 |
| 5450-0175 | Light Whelen Pioneer Plus model PFP2AC 120V with brow mount powder coated black (EA). Location(s): [#LOC]. | 2526 |
| 5450-0176 | Light Whelen Pioneer Plus LED model PFP2 12V with pedestal mount powder coated black. Includes switch in cab (side facing lights switched separately). Location(s): [#LOC]. | 2553 |
| 5450-0179 | Light Whelen Pioneer model PFA2 with brow mount powder coated FLNA3225E-1 (EA). Includes switch in cab (driver and officer side facing lights switched separately). Location(s): [#LOC]. | 2143 |

| Item No. | Description | |
|---|---|---|
| 5450-0181 | Light Fire Research Spectra 12V LED model SPA510E-Q20-SW with internal pull-up pole. Includes switch accessible to driver. Location(s): [#LOC]. | 3129 |
| 5450-0183 | Fire Research Spectra 12V LED scene light model SPA530E-Q20-SW-H with external push-up pole. Includes switch in cab accessible to driver. Location: [#LOC]. | 3127 |
| 5450-0184 | Light Whelen Pioneer model PFP2AC 120V powder coated FLNA3225E-1 with external bottom raise pole mount painted FLNA3225E-1 (ROM model KR-SB-5PFP2AC-W/2-I). Location(s): [#LOC]. | 2764 |
| 5450-0185 | Light Whelen Pioneer model PFA1 with brow mount (EA). Includes switch in cab (driver and officer side facing lights switched separately). Location(s): [#LOC]. | 1348 |
| 5450-0186 | Light Whelen Pioneer model PFA1 with vertical bail mount. Includes switch in cab (driver and officer side facing lights switched separately). Location(s): [#LOC]. | 1255 |
| 5450-0188 | Quartz light MagnaFire 5000 500W/120V model KR-SB-555-W/2-I-SL with (special length) external pole. Location(s): [#LOC]. | 1303 |
| 5450-0189 | Light Whelen Pioneer Plus model PFP1AC 120V with brow mount (EA). Location(s): [#LOC]. | 1798 |
| 5450-0190 | Fire Research Spectra 12V LED model SPA260-Q15 with surface mount. Includes switch accessible to driver. Location: [#LOC]. | 2106 |
| 5450-0191 | Light Fire Research Spectra 120V LED model SPA600-K20-ON-SPA603 with 40" telescopic tripod pole. Location(s): :[#LOC]. | 3608 |
| 5450-0192 | Light Fire Research Spectra 120V LED model SPA830-K20 with universal brow mount (EA). Location: [#LOC]. | 2732 |
| 5450-0193 | Light Fire Research Spectra LED 110V model SPA510-K20 with internal pull-up pole. Location(s): [#LOC]. | 2793 |
| 5450-0194 | Light Whelen Pioneer model PCP2 with PBA203 recess mount. Includes switch in cab accessible to driver (driver and officer side facing lights switched separately). Location: [#LOC]. | 2502 |
| 5450-0195 | Whelen Micro Pioneer Series Super LED Work/Scene Light Model MPR15W with 15 degree recess mount (EA). Includes switch accessible to driver (side facing lights switched seperately). Location: [#LOC]. | 827 |
| 5450-0196 | Brow light brackets (not housing) shall be painted FLNA 10219. This shall include forward rear and side facing if so equipped. | 197 |
| 5450-0197 | Light Whelen Pioneer model PFP2 12V powder coated FLNA3225E-1 red with internal top raise pole mount (ROM model KR-9PFP2-S). Includes switch on light head. Location: [#LOC]. | 2410 |
| 5450-0198 | Light Whelen Pioneer Plus model PFP2 12V with brow mount powder coated FLNA3225E-1 red (EA). Includes switch in cab accessible to driver (driver and officer side facing lights switched separately). Location(s): [#LOC]. | 2690 |
| 5450-0199 | Light Whelen Pioneer Plus model PFP1 12V with vertical bail mount powder coated FLNA3225E-1 red. Includes switch in cab accessible to driver (side facing lights switched seperately). Location(s): [#LOC]. | 1635 |
| 5450-0200 | Fire Research Spectra 120V LED scene light model SPA530-K20-SW-H with external push-up pole. Location: [#LOC]. | 3127 |
| 5450-0201 | Light Fire Research Spectra LED 12V model SPA570-Q20 without pole. Includes switch accessible to driver (driver and officer side facing lights switched seperately). Location(s): [#LOC]. | 2892 |
| 5450-0202 | Fire Research Spectra 120V LED model SPA260-K15 with surface mount. Location: [#LOC]. | 2546 |
| 5450-0204 | Light Whelen Micro Pioneer Plus model MPBW with bail mount. Includes switch in cab accessible to driver (side facing lights switched separately). Location: [#LOC]. | 833 |
| 5450-0207 | Light Whelen Pioneer Plus LED model PFP2 120V with pedestal mount powder coated black. Location(s): [#LOC]. | 2745 |
| 5450-0208 | Fire Research Spectra 12V LED model SPA802-Q20-02 with brow mount (EA). Includes switch accessible to driver. Location: [#LOC]. | 2732 |
| 5450-0209 | Fire Research Spectra 12V LED model SPA802-Q20-02 with brow mount powder coated black (EA). Includes switch accessible to driver. Location: [#LOC]. | 2789 |
| 5450-0210 | Light Fire Research Spectra LED 240V model SPA570-J20 without pole. Location(s): [#LOC]. | 2892 |
| 5450-0211 | Light Fire Research Spectra 240V LED model SPA512-J20-SW with internal thru roof push up pole. Includes switch accessible to driver. Location(s): [#LOC]. | 3330 |
| 5450-0212 | Quartz light Fire Research Focus 1500W/240V model FCA570-M15 without pole. Location(s): [#LOC]. | 1454 |
| 5450-0214 | Light Whelen Pioneer Plus model PFP1 12V powder coated black with vertical bail mount. Includes switch in cab accessible to driver (side facing lights switched seperately). Location(s): driver and officer side rear of body up high. | 1524 |
| 5450-0215 | Light Whelen 12V Pioneer model PFP2 powder coated black with PBA203 recess mount. Includes switch accessible to driver (side facing lights switched separately). Location: driver and officer side centrally located in center area recessed into roof top compartment raise. | 2454 |
| 5450-0216 | Quartz light Fire Research Spectra 120V LED model SPA802-K20-02 with brow mount (EA). Location: [#LOC]. | 2732 |
| 5450-0218 | Fire Research Evolution 12V LED model FCA210-V12 with recess mount powder coated black. Includes switch in cab accessible to driver. Location(s):[#LOC]. | 2123 |
| 5450-0220 | Quartz light MagnaFire 750W/120V model KR-1936 with recess mount in diamond plate mounting box. Location(s): [#LOC]. | 1224 |

| Item No. | Description | |
|---|---|---|
| 5450-0221 | Quartz light MagnaFire 5000 750W/120V model KR-2556 with cab brow mount (EA). Light head to be powder coated black. Location(s): [#LOC]. | 1027 |
| 5450-0222 | Quartz light MagnaFire 750W/120V model KR-1336 with low profile mount. Light head to be powder coated black. Location(s): [#LOC] | 1162 |
| 5450-0223 | Quartz light MagnaFire 750W/120V model KR-SB-536-W/2-I with external pole. Light head to be powder coated black. Location(s): [#LOC]. | 1561 |
| 5450-0224 | Quartz light Fire Research Focus 1000W/120V model FCA600-M10-ON-6F3 with telescopic tripod pole. Location(s): [#LOC]. | 1976 |
| 5450-0226 | Light Whelen Pioneer Plus model PFP1AC 120V with vertical bail mount. Location(s): [#LOC]. | 1730 |
| 5450-0227 | Light Whelen Pioneer Plus LED model PFP1 12V with PBAPEDD pedestal mount. Includes switch in cab (side facing lights switched separately). Location(s): [#LOC]. | 1819 |
| 5450-0230 | Floodlight Whelen/ROM model KR-SB-8PFP2AC-I-TM with external mount tripod telepole. Pole length required shall be determined upon mounted location. Requires 110V receptacle. Location(s): [#LOC]. | 3176 |
| 5450-0231 | Light Whelen Pioneer Plus LED model PFP2 12V with PBAPEDD pedestal mount powder coated black housing mounting brackets applicable shall also be black. Includes switch in cab (side facing lights switched separately). Location(s): [#LOC]. | 2605 |
| 5450-0232 | Light Whelen Pioneer Plus model PCP2AFSB 120VAC flood/spot with brow mount powder coated black (EA). Location(s): [#LOC]. | 2602 |
| 5450-0233 | Light Whelen Pioneer Plus model PCP2ASFB 120VAC spot/flood with brow mount powder coated black (EA). Location(s): [#LOC]. | 2602 |
| 5450-0234 | Light Whelen Pioneer Plus model PCP2AFSB 120VAC flood/spot with pedestal mount powder coated black. Location(s): [#LOC]. | 2598 |
| 5450-0235 | Light Whelen Pioneer Plus model PCP2ASFB 120VAC spot/flood with pedestal mount powder coated black. Location(s): [#LOC]. | 2598 |
| 5450-0237 | Light Whelen Pioneer Plus 12V model PCP2 flood/spot with pedestal mount. Includes switch in cab (driver and officer side facing lights switched separately). Location(s): [#LOC]. | 2598 |
| 5450-0239 | Light Whelen Pioneer Plus model PCP2 flood/spot with pedestal mount (EA). Includes switch in cab (driver and officer side facing lights switched separately). Location(s): [#LOC]. | 2598 |
| 5450-0240 | Light Whelen Pioneer Plus model PFP2 12V with Quest brow mount (EA) powder coated black. Includes switch in cab accessible to driver (driver and officer side facing lights switched separately). Location(s): [#LOC]. | 2580 |
| 5450-0242 | Fire Research Spectra 12V LED model SPA260-Q15 powder coated black with surface mount. Includes switch accessible to driver. Location: [#LOC]. | 2165 |
| 5450-0243 | Quartz light Fire Research Spectra 120V LED model SPA260-K15 powder coated black with surface mount. Location: [#LOC]. | 2604 |
| 5450-0244 | Light Whelen Pioneer Plus LED model PCP3 12V combination flood and 8 degree spotlight with pedestal mount adapter. Includes switch in cab (side facing lights switched separately). Location(s): [#LOC]. | 2906 |
| 5450-0245 | Light Whelen Pioneer Plus model PFP2AC 120V with brow mount (EA). Location(s): [#LOC]. | 2526 |
| 5450-0246 | Light Whelen Micro Pioneer Plus model MPBB with bail mount powder coated black. Includes switch in cab accessible to driver (side facing lights switched separately). Location: [#LOC]. | 833 |
| 5450-0247 | Quartz light MagnaFire 750W/120V model KR-1936 with recess mount powder coated black. Location(s): [#LOC]. | 1078 |
| 5450-0248 | Quartz light Fire Research Optimum 1000W/240V model OPA510E-M12-SW with internal pull up pole. Location(s): [#LOC]. | 1881 |
| 5450-0252 | Light Whelen Pioneer model PFA2 with PBA203 recess mount. Includes switch in cab (driver and officer side facing lights switched separately). Location: [#LOC]. | 2209 |
| 5450-0255 | Light Fire Research Evolution LED 12V model FCA580-V15 side fixed mount. Includes switch accessible to driver. Location(s): [#LOC]. | 2130 |
| 5450-0256 | Floodlight Whelen PFP1AC 120v with external mount tripod telepole. Requires 110V receptacle. Location(s): [#LOC]. | 2891 |
| 5450-0257 | Light Whelen Pioneer model PFP2 12V with external bottom raise pole mount. Includes switch accessible to driver. Location(s): [#LOC]. | 2846 |
| 5450-0258 | Light Whelen Pioneer Plus model PFP2 12V with internal top raise pole mount. Includes switch accessible to driver. Location: [#LOC]. | 2574 |
| 5450-0259 | Floodlight Whelen PFP2AC 110V with external mount 50" tripod telepole. Requires 110V receptacle. Location(s): [#LOC]. | 3579 |
| 5450-0260 | Light Whelen Pioneer model PCP2AP 120V with external bottom raise pole mount. Location(s): [#LOC]. | 3221 |
| 5450-0261 | Light Whelen Pioneer model PFP2AC 120V with external bottom raise pole mount. Location(s): [#LOC]. | 2962 |
| 5450-0262 | Light Whelen Pioneer model PFP2 12V with external bottom raise pole mount. Includes switch accessible to driver. Location(s): [#LOC]. | 2862 |
| 5450-0263 | Light Whelen Pioneer Plus model PCP2 12V flood/spot with brow mount powder coated black. Includes switch in cab (driver and officer side facing lights switched separately). Location(s): [#LOC]. | 2602 |
| 5450-0264 | Light Whelen Pioneer Plus LED model PFP2 120V with pedestal mount. Location(s): [#LOC]. | 2745 |

| Item No. | Description | |
|---|---|---|
| 5450-0265 | Light Whelen Pioneer model PFP2AC 120V with internal top raise pole mount. Location: [#LOC]. | 2893 |
| 5450-0266 | Light Whelen Pioneer Plus model PFP2 12V with recess mount. Includes switch accessible to driver (driver and officer switched seperately) and diamond plate mounting boxes for recess mount. Location: [#LOC]. | 2765 |
| 5450-0267 | Light Whelen 150W/120V with portable base. Requires 110V receptacle. Location(s): [#LOC]. | 2671 |
| 5450-0268 | Light Fire Research Spectra LED 120V model SPA570-K20 without pole powder coated black. Location(s): [#LOC]. | 2948 |
| 5450-0269 | Light Fire Research Spectra LED 110V model SPA510-K20 with internal pull-up pole powder coated black. Location(s): [#LOC]. | 2851 |
| 5450-0270 | Fire Research Evolution 12V LED scene light model FCA510E-V15-SW with internal pull-up pole powder coated black. Includes switch accessible to driver. Location: [#LOC]. | 2674 |
| 5450-0271 | Akron SceneStar 120V LED model ELSS-XLAC-SM2-PS-UI-TL. Location: [#LOC]. | 2553 |
| 5450-0272 | Light Whelen Pioneer model PFP2AC 120V powder coated black with internal bottom raise pole mount. Location: [#LOC]. | 2893 |
| 5450-0273 | Quartz light Fire Research Optimum 1500W/240V model OPA642-M15-ON-603 with 16.625" telescopic tripod pole. Location(s): [#LOC]. | 1918 |
| 5450-0274 | Fire Research Spectra 12V LED scene light model SPA530E-Q20-SW-H with external push-up pole powder coated black. Includes switch in cab accessible to driver. Location: [#LOC]. | 3185 |
| 5450-0276 | Akron SceneStar 12V LED model ELSS-XLDC-PU-UI-TL. Location:[#LOC]. | 2228 |
| 5450-0277 | Light Whelen Pioneer model PFP2 12V powder coated black with external bottom raise pole mount. Includes switch accessible to driver. Location(s) [#LOC]. | 2846 |
| 5450-0278 | Light Whelen Pioneer Plus model PFP2 12V with recess mount. Location(s): [#LOC]. | 2930 |
| 5450-0279 | Floodlight Whelen PFP2AC 110V powder coated black with external mount 40" tripod telepole. Requires 110V receptacle. Location(s): [#LOC]. | 3579 |
| 5450-0280 | Light Whelen Pioneer model PFP1AC 120V with internal top raise pole mount. Location: [#LOC]. | 2066 |
| 5450-0281 | Quartz light Fire Research Focus 1000W/240V model FCA300U-M12 with roof mount. Location(s): [#LOC]. | 1096 |
| 5450-0282 | Light Whelen Pioneer model PCP2 12V powder coated black with external bottom raise pole mount. Includes switch accessible to driver. Location(s) [#LOC]. | 2846 |
| 5450-0283 | Light Whelen Pioneer Plus model PFP2 12V powder coated black with internal top raise pole mount. Includes switch accessible to driver. Location: [#LOC]. | 2574 |
| 5450-0284 | Light Whelen 150W/120V with portable base powder coated black. Requires 110V receptacle. Location(s): [#LOC]. | 2671 |
| 5450-0285 | Floodlight Whelen PFP2AC 110V with external mount custom length tripod telepole. Requires 110V receptacle. Location(s): [#LOC]. | 3579 |
| 5450-0286 | Light Whelen Pioneer model PCP2 12V with external bottom raise pole mount. Includes switch accessible to driver. Location(s) [#LOC]. | 2846 |
| 5450-0287 | Light Whelen 12 volt Pioneer Plus model PFP1 with brow mount (EA) powder coated black. Includes switch in cab (driver and officer side facing lights switched separately). Location(s): [#LOC]. | 1777 |
| 5450-0288 | Light Whelen Pioneer Plus model PFP1 powder coated black with bail mount. Includes switch in cab accessible to driver (side facing lights switched seperately). Location(s): [#LOC]. | 1524 |
| 5450-0289 | Light Whelen Pioneer model PFP1 12V with external bottom raise custom length pole. Includes switch accessible to driver. Location(s): [#LOC]. | 1979 |
| 5450-0290 | Light Whelen Pioneer model PFP1 12V with internal top raise pole mount. Includes switch accessible to driver. Location: [#LOC]. | 1910 |
| 5450-0292 | Light FireTech model FT-SL-15-110-W 120V with internal top raise pole mount (ROM model KR-900-I) pre-assembled from vendor. Location: [#LOC]. | 2775 |
| 5450-0293 | FireTech 72" 12V brow light with integrated marker lights. Includes switch accessible to driver. Replaces front brow marker lights. Requires special bracket 5450-0340 on aerials with waterway trough. Not available on aerials with deep trough. | 4358 |
| 5450-0294 | Light Whelen Pioneer Max model PCP3 12V with Whelen external bottom raise pole mount. Includes switch accessible to driver. Location(s): [#LOC]. | 3245 |
| 5450-0295 | LED scene light ExtendaLite 220W/12V model ELSS-XLDC-PS-SM2-UI-SW with telescopic external push-up pole. Includes switch accessible to driver in cab. Location(s): [#LOC]. | 2510 |
| 5450-0296 | Fire Research Evolution 12V LED scene light model FCA570-V15 without pole. Includes switch in cab accessible to driver. Location: [#LOC]. | 2214 |
| 5450-0297 | Light Fire Research Spectra LED 110V model SPA700-K20 with portable mount. Requires 110V receptacle. Location(s): [#LOC]. | 2644 |
| 5450-0298 | Light Whelen Pioneer Plus model PFP1 12V with recess mount with painted stainless steel box. Includes switch accessible to driver (side facing lights switched separately). Location(s): [#LOC]. | 1754 |
| 5450-0299 | Light Whelen Pioneer Plus model PFP1AC 120V with brow mount (EA) powder coated black. Location(s): [#LOC]. | 1798 |
| 5450-0300 | Light Whelen Pioneer Plus model PFP2AC 120V with recess mount. Locate [#LOC]. Includes diamond plate mounting box for recess mount. | 3117 |

| Item No. | Description | |
|---|---|---|
| 5450-0301 | Light Fire Research Spectra 120V LED model SPA656-K20-ON-SPA603 with 28" telescopic tripod pole. Location(s): [#LOC]. | 3608 |
| 5450-0302 | Light Fire Research Spectra 120V LED model SPA642-K20-ON-SPA603 with 16" telescopic tripod pole. Location(s): [#LOC]. | 3608 |
| 5450-0304 | Light Whelen Pioneer Plus model PFP2 12V with bail mount. Includes switch in cab accessible to driver (side facing lights switched seperately). Location(s): [#LOC]. | 2277 |
| 5450-0305 | Akron SceneStar 12V LED model ELSS-SLDC-PU-UI-TL. Location: [#LOC]. | 2147 |
| 5450-0306 | Light Whelen Pioneer Plus model PCP2AFSP 120VAC flood/spot with pedestal mount. Location(s): [#LOC]. | 2880 |
| 5450-0307 | Light Whelen Pioneer Plus 12V model PCP2 flood/spot with pedestal mount powder coated black. Includes switch in cab (driver and officer side facing lights switched separately). Location(s): [#LOC]. | 2598 |
| 5450-0308 | Light Whelen Slimline Pioneer Plus model PSL2 12V with Freightliner center brow mount. Includes switch in cab accessible to driver. | 1676 |
| 5450-0309 | Light Whelen Pioneer Plus 12V model PFP2 flood with pedestal mount. Includes switch in cab (driver and officer side facing lights switched separately). Location(s): [#LOC]. | 2531 |
| 5450-0310 | Fire Research Spectra 120V LED model SPA260-K15 with surface mount and diamond plate mounting box. Location: [#LOC]. | 2730 |
| 5450-0311 | Light Whelen Pioneer Plus model PCP2 flood/spot with Quest brow mount (EA). Includes switch in cab (driver and officer side facing lights switched separately). Location(s): [#LOC]. | 2602 |
| 5450-0312 | Quartz light Fire Research Optimum 1000W/240V model OPA530-M12-SR-SW-ON with external push up pole. Location(s): [#LOC]. | 1705 |
| 5450-0313 | FireTech 11" 12V double stack brow light powder coated white. Includes switch in cab (driver and officer side facing lights switched separately). Location: [#LOC] | 1457 |
| 5450-0314 | FireTech 11" 12V double stack bracket mounted light. Includes switch in cab (driver and officer side facing lights switched separately). Location: [#LOC] | 1457 |
| 5450-0315 | Quartz light Fire Research Optimum 750W/110V model OPA642-S75-ON-603 with 16.625" telescopic tripod pole. Location(s): [#LOC]. | 1846 |
| 5450-0316 | Light Whelen Pioneer model PFP1 12V with PBA103 recess mount in painted smooth plate boxes. Includes switch accessible to driver (driver and officer side facing lights switched separately). Location: [#LOC]. | 1771 |
| 5450-0317 | Quartz light Fire Research Focus 1000W/120V model FCA530-M10-CL50-SR-SW-ON with external push up pole. Location(s): [#LOC]. | 1926 |
| 5450-0318 | Fire Research Spectra Max 12V LED model SPA260-Q20 with surface mount. Includes switch accessible to driver. Location: [#LOC]. | 2340 |
| 5450-0319 | Akron SceneStar 12V LED model ELSS-XLDC-SM2-PS-UI-TL. Includes switch accessible to driver. Location: [#LOC]. | 2553 |
| 5450-0320 | Light Whelen Pioneer Plus model PFP1 12V powder coated black with recess mount. Includes switch accessible to driver (side facing lights switched separately). Location(s): [#LOC]. | 1524 |
| 5450-0321 | FireTech 72" 12V brow light with integrated marker lights and black housing. Includes switch accessible to driver. Replaces front brow marker lights. Requires special bracket 5450-0340 on aerials with waterway trough. Not available on aerials with deep trough. | 4358 |
| 5450-0322 | Light Fire Research Spectra Max 120V LED model SPA642-K28-ON-SPA603 with 16" telescopic tripod pole. Location(s): [#LOC]. | 3608 |
| 5450-0323 | Light Whelen Pioneer Plus model PFP2AC 120V powder coated black with recess mount. Location(s): [#LOC]. | 2930 |
| 5450-0324 | Light Whelen Pioneer model PCP2 powder coated black with PBA203 recess mount in fabricated diamond plate boxes. Includes switch in cab (driver and officer side facing lights switched separately). Location: [#LOC]. | 2699 |
| 5450-0325 | Light Whelen Pioneer model PCP2 with chrome surface mount. Includes switch in cab accessible to driver (driver and officer side facing lights switched separately). Location: [#LOC]. | 2219 |
| 5450-0326 | Fire Research Spectra 12V LED model SPA260-Q15 with surface mount and diamond plate mounting box. Location: [#LOC]. | 2303 |
| 5450-0327 | Light Whelen Pioneer model PFP2AC 120V with internal bottom raise pole mount. Location: [#LOC]. | 2893 |
| 5450-0328 | Federal Signal Commander 12V LED scene light model COMLC15K-510E-SW with internal pull-up pole. Includes switch accessible to driver. Location: [#LOC]. | 2616 |
| 5450-0329 | Fire Research Spectra 120V LED model SPA260-K15 with surface mount and smooth plate painted mounting box. Location: [#LOC]. | 2848 |
| 5450-0330 | Diamond plate mounting boxes (4). For use with scene lights and warning lights. Locate on driver side forward and rearward compartment tops outboard; boxes to be full depth of compartment top. Officer side forward and rearward upper body corners. | 978 |
| 5450-0331 | Quartz light Fire Research Focus 500W/110V model FCA802-S50-01 with brow mount (EA). Location(s): [#LOC]. | 1006 |
| 5450-0332 | Light Whelen Pioneer model PFP2AC 120V powder coated black with external bottom raise pole mount. Location(s): [#LOC]. | 2962 |

| Item No. | Description | |
|---|---|---|
| 5450-0333 | Quartz light KwikRaze 1500W/220V model KR-93D-I-NCW with internal telepole. Location(s): [#LOC]. | 1050 |
| 5450-0334 | Akron SceneStar 120V LED model ELSS-XLAC-RM recess mount. Location: [#LOC]. | 2146 |
| 5450-0335 | LED light Akron SceneStar 220W/12V model ELSS-XLDC-BL. Includeds switch accessible to driver. Location(s): [#LOC]. | 2340 |
| 5450-0336 | Quartz light Fire Research Focus 500W/120V model FCA300U-S50 with brow mount. Location: Center of cab brow. | 1033 |
| 5450-0337 | FireTech 35" 12V mini brow light with white housing. Includes switch in cab (driver and officer side facing lights switched separately). Location: [#LOC] | 2169 |
| 5450-0338 | FireTech 21" recessed mini brow light. Includes 115v to 24v power supply (mounted seperately from light). Location: [#LOC] | 2570 |
| 5450-0339 | FireTech 46" 12V brow light with black housing. Includes switch accessible to driver (driver and officer side facing lights switched separately). Location: [#LOC] | 2556 |
| 5450-0340 | Extended brow light brackets for use with FireTech front brow light with standard cab trough. | 281 |
| 5450-0341 | FireTech 72" 12V scene light with black housing. Includes switch accessible to driver. Side facing lights switched seperately. Location: [#LOC]. | 4156 |
| 5450-0342 | Light shield for FireTech 72" scene light (EA). Smooth aluminum painted Durabak black. Location: [#LOC]. | 366 |
| 5450-0343 | Light Whelen 12V Pioneer model PFP2 powder coated black with PBA203 recess mount. Includes switch accessible to driver (side facing lights switched separately). Location: [#LOC]. | 2454 |
| 5450-0344 | Light Whelen Slimline Pioneer Plus model PSL2 12V with recess mount. Includes switch in cab accessible to driver (side facing lights switched seperately). Location: [#LOC]. | 1439 |
| 5450-0345 | Quartz light Fire Research Optimum 750W/110V model OPA200-S75 with recess mount with diamond plate box. Location(s): [#LOC]. | 1307 |
| 5450-0346 | FireTech 72" 12V brow lights with integrated marker lights for Quest. Includes (3) 24" brow lights with switch accessible to driver. Replaces front brow marker lights. Not available on aerials with deep trough. | 4358 |
| 5450-0347 | Quartz light Fire Research Optimum 750W/110V portable model OPA700-S75-OP703 powder coated black. Location(s): [#LOC]. | 1023 |
| 5450-0348 | Light Whelen Slimline Pioneer Plus model PSL2 12V with pedestal mount. Includes switch in cab accessible to driver (side facing lights switched seperately). Location: [#LOC]. | 1508 |
| 5450-0349 | Floodlight Whelen PFP2AC 110V powder coated black with external mount 50" tripod telepole. Requires 110V receptacle. Location(s): [#LOC]. | 3579 |
| 5450-0350 | Light Whelen Pioneer model PFP1AC 120V with external bottom raise pole mount. Location(s): [#LOC]. | 2469 |
| 5450-0351 | Light Whelen Pioneer model PCP2 with PBA203 recess mount in smooth plate mounting boxes painted job (2-tone if applicable) color. Includes switch in cab (driver and officer side facing lights switched separately). Location: [#LOC]. | 2744 |
| 5450-0353 | Light Fire Research Spectra 12V LED model SPA850-Q20 with flat mount. Location: [#LOC]. | 2664 |
| 5450-0354 | Fire Research Spectra 120V LED model SPA260-K20 with surface mount. Location: [#LOC]. | 2760 |
| 5450-0355 | Fire Research Spectra 120V LED scene light model SPA540-K20-CL-SW-H powder coated black with external pull-up pole. Location: [#LOC]. | 3178 |
| 5450-0356 | Quartz light Fire Research Evolution 12V LED model FCA300U-V15 with brow mount powder coated black. Includes switch accessible to driver. Location: center of cab brow. | 2219 |
| 5450-0357 | Light FireTech model FT-SL-15-W 12V with internal top raise pole mount (ROM model KR-900-I) pre-assembled from vendor. Includes switch in cab accessible to driver (side facing lights switched seperately). Location: [#LOC]. | 2636 |
| 5450-0359 | Federal Signal Commander 12V LED scene light model COMM15K-530-SW-H with external push-up pole. Includes switch in cab accessible to driver. Location: [#LOC]. | 2616 |
| 5450-0360 | Federal Signal Commander 12V LED scene light model COM15K-802 with brow mount (EA). Includes switch accessible to driver (driver and officer side facing lights switched separately). Location: [#LOC]. | 2250 |
| 5450-0361 | FireTech 11" 12V double stack brow light powder coated black. Includes switch in cab (driver and officer side facing lights switched separately). Location: [#LOC] | 1457 |
| 5450-0362 | FireTech 21" 12V recessed mini brow light model FT-MB-2.18-W. Location: [#LOC]. | 2166 |
| 5450-0363 | Light Whelen Pioneer model PCP1SM1C with chrome surface mount. Includes switch in cab accessible to driver (driver and officer side facing lights switched separately). Location: [#LOC]. | 1309 |
| 5450-0364 | Light Whelen Pioneer Plus model PFP2 12V with recess mount. Includes switch accessible to driver (driver and officer switched seperately) and aluminum smooth plate painted job color mounting boxes for recess mount. Location: [#LOC]. | 2988 |
| 5450-0365 | FireTech 42" 12V mini brow light. Includes switch in cab (driver and officer side facing lights switched separately). Location: [#LOC]. | 2366 |
| 5450-0366 | Fire Research Spectra Max 12V LED model SPA802-Q28-02 with brow mount (EA). Includes switch accessible to driver. Location: [#LOC]. | 2979 |
| 5450-0367 | FireTech 35" 12V mini brow light with black housing. Includes switch in cab (driver and officer side facing lights switched separately). Location [#LOC]. | 2169 |

| Item No. | Description | |
|---|---|---|
| 5450-0368 | No exposed wire connection for FireTech 72" 12V brow light with integrated marker lights. Locate: Front of cab roof. | 271 |
| 5450-0369 | No exposed wire connection for FireTech 12V mini brow light. Locate: Roll up door header B1. | 271 |
| 5450-0370 | Light Whelen Pioneer Plus model PFP2 12V with vertical bail mount. Includes switch in cab accessible to driver (side facing lights switched seperately). Location(s): [#LOC]. | 2169 |
| 5450-0371 | Light Fire Research Spectra MS 12V LED model SPA510E-R14-SW with internal pull-up pole. Includes switch accessible to driver. Location(s): [#LOC]. | 2144 |
| 5450-0372 | Fire Research Mini-Spectra 12V LED scene light model SPA530-R14-CL-SW-H with external push-up pole. Location: [#LOC]. | 2369 |
| 5450-0373 | FireTech 46" 12V brow light with white housing. Includes switch accessible to driver (driver and officer side facing lights switched separately). Location: [#LOC]. | 2556 |
| 5450-0374 | FireTech 42" 12V mini brow light with black housing. Includes switch in cab (driver and officer side facing lights switched separately). Location: [#LOC]. | 2366 |
| 5450-0375 | Light Fire Research Spectra Max LED 12V model SPA570-Q28 without pole. Includes switch accessible to driver (driver and officer side facing lights switched seperately). Location(s): [#LOC]. | 3010 |
| 5450-0376 | Light Fire Research Spectra MS 120V LED model SPA600-T14-ON-SPA603 with 40" telescopic tripod pole. Location(s): [#LOC]. | 2492 |
| 5450-0377 | Light Whelen Slimline Pioneer Plus model PSL2 12V with Freightliner driver/officer brow mounts (PR). Includes switch in cab accessible to driver. | 3004 |
| 5450-0378 | Light Whelen Pioneer model PCP2SM2C with smooth plate mounting box painted job color (two-tone job color if applicable). Includes switch in cab accessible to driver (driver and officer side facing lights switched separately). Location: [#LOC]. | 2423 |
| 5450-0379 | Light Whelen Pioneer model PCP2SM2C with diamond plate mounting box. Includes switch in cab accessible to driver (driver and officer side facing lights switched separately). Location: [#LOC]. | 2309 |
| 5450-0380 | Light Whelen Pioneer model PCPSM1B with black surface mount. Includes switch in cab accessible to driver (driver and officer side facing lights switched separately). Location: [#LOC]. | 1309 |
| 5450-0381 | FireTech 15" 12V mini double stacked trunnion mount light. Includes switch in cab (driver and officer side facing lights switched separately). Location:[#LOC]. | 1473 |
| 5450-0382 | FireTech 72" 12V brow light powder coated job color (two-tone color if applicable) with integrated marker lights. Includes switch accessible to driver. Replaces front brow marker lights. Not available on aerials with deep trough. | 4906 |
| 5450-0383 | Light Whelen Pioneer model PFP2AC 120V powder coated black with external bottom raise pole mount. Location(s): [#LOC]. | 2962 |
| 5450-0384 | Light Whelen Pioneer Plus model PFP2AC 120V powder coated FLNA3225E-1 red with brow mount (EA). Location(s): [#LOC]. | 2607 |
| 5450-0385 | Light Whelen Pioneer model PCP2 powder coated black with PBA203 recess mount. Includes switch in cab accessible to driver (driver and officer side facing lights switched separately). Location: [#LOC]. | 2502 |
| 5450-0386 | Quartz light Fire Research Focus 1000W/240V model FCA510E-M12-SW with internal pull up pole. Location(s): [#LOC]. | 1770 |
| 5450-0387 | FireTech 21" 12V double stack brow light powder coated black with combo spot/flood optics. Includes switch in cab (driver and officer side facing lights switched separately). Location: [#LOC] | 2118 |
| 5450-0388 | Fire Research Mini-Spectra 120V LED scene light model SPA530-T14-SW-H with external push-up pole. Location: [#LOC]. | 2259 |
| 5450-0389 | FireTech 31" 12V mini brow light with black housing. Includes switch in cab (driver and officer side facing lights switched separately). Location [#LOC]. | 2021 |
| 5450-0390 | FireTech 20" 12V mini brow light. Includes switch in cab (driver and officer side facing lights switched separately). Location: [#LOC] | 1274 |
| 5450-0391 | Light Whelen Pioneer model PCP2SM2B with black surface mount. Includes switch in cab accessible to driver (driver and officer side facing lights switched separately). Location: [#LOC]. | 2219 |
| 5450-0392 | Light Whelen Pioneer model PCP2SM2B with black housing and diamond plate mounting box. Includes switch in cab accessible to driver (driver and officer side facing lights switched separately). Location: [#LOC]. | 2309 |
| 5450-0393 | Light Whelen Pioneer model PCP2SM2B with black housing and painted smooth plate mounting box. Includes switch in cab accessible to driver (driver and officer side facing lights switched separately). Location: [#LOC]. | 2367 |
| 5450-0394 | Fire Research Spectra Max 12V LED model SPA802-Q28-02 with brow mount (EA) powder coated black. Includes switch accessible to driver. Location: [#LOC]. | 3036 |
| 5450-0395 | FireTech 35" 12V mini brow light with black housing. Includes switch in cab (driver and officer side facing lights switched separately). Location: [#LOC] | 2169 |
| 5450-0397 | Light Whelen Pioneer Plus model PFP2 12V with recess mount. Includes switch accessible to driver (driver and officer switched separately) with aluminum smooth plate mounting boxes painted job color for recess mount. Location: [#LOC]. | 2988 |
| 5450-0398 | Light Whelen Pioneer Plus LED model PFP1 120V with pedestal mount. Location(s): [#LOC]. | 2142 |

| Item No. | Description | |
|---|---|---|
| 5450-0399 | Light Whelen Pioneer Plus 12V model PFP1 flood with side mount pedestal bracket. Includes switch in cab (driver and officer side facing lights switched separately). Location(s): Rearward upper body panel officer side (inboard of warning lights if equipped) | 1918 |
| 5450-0400 | Light Whelen Pioneer Plus 12V model PFP1 flood with side mount pedestal bracket powder coated black. Includes switch in cab (driver and officer side facing lights switched separately). Location(s): [#LOC]. | 1918 |
| 5450-0401 | Light Whelen Pioneer Plus model PFP2 12V with internal bottom raise pole mount. Includes switch accessible to driver. Location: [#LOC]. | 2861 |
| 5450-0402 | Light Whelen PCP3AP1 225W/120V with portable base. Requires 110V receptacle. Location(s): [#LOC]. | 2987 |
| 5450-0403 | Light Whelen Pioneer Max model PCP3 120V with Whelen external bottom raise pole mount. Location(s): [#LOC]. | 3245 |
| 5450-0404 | Light Fire Research Spectra Max LED 120V model SPA570-K28 without pole. Location(s): [#LOC]. | 3010 |
| 5450-0405 | Fire Research Mini Spectra 12V LED model SPA802-R14-02 with brow mount (EA). Includes switch accessible to driver. Location: [#LOC].. | 1839 |
| 5450-0406 | Fire Research FRC Evolution 12V LED scene light model FCA530-V15-SW-H with external push-up pole powder coated black. Includes switch in cab accessible to driver. Location: [#LOC]. | 2659 |
| 5450-0407 | Quartz light Fire Research Spectra 120V LED model SPA802-K20-02 with brow mount (EA) powder coated black. Location: [#LOC]. | 2785 |
| 5450-0408 | Light Whelen Pioneer Plus 12V model PFS2 flood/spot with pedestal mount powder coated FLNA3225E-1 red. Includes switch in cab (driver and officer side facing lights switched separately). Location(s): [#LOC]. | 2695 |
| 5450-0409 | Light Whelen Pioneer Plus model PFS2 flood/spot with brow mount powder coated FLNA3225E-1 red (EA). Includes switch in cab (driver and officer side facing lights switched separately). Location(s): [#LOC]. | 2700 |
| 5450-0410 | Light Whelen 12 volt Pioneer Plus model PFS1 flood/spot with brow mount powder coated FLNA3225E-1 red (EA). Includes switch in cab (driver and officer side facing lights switched separately). Location(s): [#LOC]. | 1874 |
| 5450-0411 | Light shield for FireTech 72" scene light (EA). Smooth aluminum painted black. Location: [#LOC]. | 366 |
| 5450-0412 | Light Whelen Pioneer model PFP1 12V powder coated black with PBA103 recess mount in painted smooth plate boxes. Includes switch accessible to driver (driver and officer side facing lights switched separately). Location: [#LOC]. | 1771 |
| 5450-0414 | Light FireTech model FT-SL-30-B 12V with internal top raise pole mount (ROM model KR-900-I) pre-assembled from vendor powder coated black. Includes switch in cab accessible to driver (side facing lights switched seperately). Location: [#LOC]. | 3241 |
| 5450-0415 | FireTech 65" 12V brow light with black housing. Includes switch accessible to driver (driver and officer side facing lights switched separately). Location: [#LOC]. | 3688 |
| 5450-0416 | Light Whelen 12V Pioneer Plus model PFS2 flood/spot with brow mount (EA). Includes switch in cab (driver and officer side facing lights switched separately). Location(s): [#LOC]. | 2602 |
| 5450-0418 | Light Whelen 12V Pioneer model PFS2 with external bottom raise pole mount. Includes switch accessible to driver. Location(s) [#LOC]. | 2846 |
| 5450-0419 | Light Whelen 12V Pioneer Plus model PFS2 flood/spot with pedestal mount. Includes switch in cab (driver and officer side facing lights switched separately). Location(s): [#LOC]. | 2598 |
| 5450-0421 | Light Whelen 12 volt Pioneer Plus model PTP1 spot light with brow mount (EA) powder coated black. Includes switch in cab (driver and officer side facing lights switched separately). Location(s): [#LOC]. | 1777 |
| 5450-0422 | Light Whelen Pioneer Plus model PFP1 12V with vertical bail mount powder coated black. Includes switch in cab accessible to driver (side facing lights switched seperately). Location(s): [#LOC]. | 1524 |
| 5450-0423 | Light Whelen Pioneer model PFS2 powder coated black with PBA203 recess mount in smooth plate mounting boxes painted job (2-tone if applicable) color. Includes switch in cab (driver and officer side facing lights switched separately). Location: [#LOC]. | 2744 |
| 5450-0424 | Light Whelen 12V Pioneer model PFS2 powder coated black with PBA203 recess mount. Includes switch in cab accessible to driver (driver and officer side facing lights switched separately). Location: [#LOC]. | 2502 |
| 5450-0426 | Light Whelen Pioneer Plus model PCP2 120V with bail mount. Location(s): [#LOC]. | 2277 |
| 5450-0427 | Light Whelen Pioneer Plus model PFP2AC 120V with bail mount powder coated black. Location(s): [#LOC]. | 2563 |
| 5450-0428 | Light Whelen 12V Pioneer Plus model PFS2 flood/spot with brow mount powder coated black (EA). Includes switch in cab (driver and officer side facing lights switched separately). Location(s): [#LOC]. | 2602 |
| 5450-0429 | Light Whelen 12V Pioneer Plus model PFS2 flood/spot with pedestal mount powder coated black. Includes switch in cab (driver and officer side facing lights switched separately). Location(s): [#LOC]. | 2598 |
| 5450-0430 | FireTech 35" 12V mini brow light with white housing. Includes switch in cab (driver and officer side facing lights switched separately). Location: [#LOC]. | 2169 |

| Item No. | Description | |
|---|---|---|
| 5450-0431 | Recess mounting for FireTech scene light. Location: [#LOC]. | 454 |
| 5450-0432 | Light Whelen Pioneer Plus model PFP1 12V w/bail mount platform mounted. Includes hardwired switch on platform console. Location(s): [#LOC]. | 1570 |
| 5450-0435 | Light Whelen Pioneer Plus model PCP2AFSB 120VAC flood/spot with brow mount (EA). Location(s): [#LOC]. | 2696 |
| 5450-0436 | FireTech 15" 12V mini double stacked trunnion mount light powder coated black. Includes switch in cab (driver and officer side facing lights switched separately). Location: [#LOC]. | 1473 |
| 5460-0000 | Light tower Night Scan Powerlite NS3.0-3000M with four 750 watt 115 volt MagnaFire quartz light heads. Requires air brakes or air system and auxiliary air tank. Tower to be located [#LOC]. | 24973 |
| 5460-0001 | Night Scan Powerlite NS3.0-4500M light tower with six 750 watt 115 volt MagnaFire quartz light heads. Control to be located next to the breaker box. Requires air brakes or air system and auxiliary air tank. Tower to be located [#LOC]. | 27214 |
| 5460-0002 | Night Scan Powerlite NS4.5-3000M light tower with four 750 watt 115 volt MagnaFire quartz light heads. Control to be located next to the breaker box. Requires air brakes or air system and auxiliary air tank. Tower to be located [#LOC]. | 25671 |
| 5460-0003 | Night Scan Powerlite NS4.5-4500M light tower with six 750 watt 115 volt MagnaFire quartz light heads. Control to be located next to the breaker box. Requires air brakes or air system and auxiliary air tank. Tower to be located [#LOC]. | 27652 |
| 5460-0004 | Night Scan Powerlite NS4.5-6000A light tower with four 1500 watt 220 volt quartz light heads. Control to be located next to the breaker box. Requires air brakes or air system and auxiliary air tank. Tower to be located [#LOC]. | 24213 |
| 5460-0005 | Night Scan Powerlite NS4.5-6000OPT light tower with four 1500 watt 230 volt Optimum quartz light heads. Control to be located next to the breaker box. Requires air brakes or air system and auxiliary air tank. Tower to be located [#LOC]. | 23886 |
| 5460-0006 | Night Scan Powerlite NS4.5-9000OPT light tower with six 1500 watt 230 volt Optimum quartz light heads. Control to be located next to the breaker box. Requires air brakes or air system and auxiliary air tank. Tower to be located [#LOC]. | 29899 |
| 5460-0010 | Will-Burt Night Scan extension harness. Required when tower is installed on custom cab roof or more than 20' from controller location. | 1231 |
| 5460-0011 | Night Scan Chief NS1.8-3000A light tower with two 1500 watt 230 volt quartz light heads. Control to be located next to the breaker box. Tower to be located [#LOC]. | 14722 |
| 5460-0013 | Command Light light tower model CL 605. Includes (6) 500 watt quartz halogen lights and a green strobe. Location: [#LOC]. | 23371 |
| 5460-0014 | Command Light light tower model CL 610. Includes (6) 650 watt quartz halogen lights and a green strobe. Location: [#LOC]. | 20937 |
| 5460-0016 | (LIghts obsolete from vendor)Night Scan Chief NS1.8-140DC light tower with two 70 watt 12 volt I.R. light heads. Control to be located next to the breaker box. Tower to be located [#LOC]. | 12453 |
| 5460-0019 | Command Light light tower model CL 611. Includes (6) 1000 watt quartz halogen lights and a green strobe. Location: [#LOC]. | 22566 |
| 5460-0020 | Night Scan Powerlite NS3.0-4500 Profiler light tower with three (3) 1500 watt 230 volt Optimum Fire Research quartz light heads. Control to be located next to the breaker box. Requires air brakes or air system and an auxiliary air tank. Location: [#LOC]. | 23248 |
| 5460-0021 | Command Light light tower model CL 615. Includes (6) 1500 watt quartz halogen lights and a green strobe. Location: [#LOC]. | 22566 |
| 5460-0022 | Command Light Knight tower model KL450. Includes (6) 500 watt quartz halogen lights and a green strobe. Location: [#LOC]. | 15392 |
| 5460-0024 | Command Light light tower model SL429-RT. Includes (2) 1500 watt quartz halogen lights. Control to be located next to the breaker box. Location: [#LOC]. | 9927 |
| 5460-0025 | Night Scan Powerlite NS4.5-5400M light tower with six 900 watt 230 volt MagnaFire quartz light heads. Control to be located next to the breaker box. Requires air brakes or air system and auxiliary air tank. Tower to be located [#LOC]. | 25961 |
| 5460-0026 | Night Scan Chief NS1.8-3000A light tower with two 1500 watt 230 volt quartz light heads. Control to be located next to the breaker box. Tower to be located [#LOC]. | 14722 |
| 5460-0027 | Command Light tower option back lighting. | 2309 |
| 5460-0030 | Command Light light tower model KL475HS. Includes (6) 750 watt Magnafire quartz halogen lights and a green strobe. Location: [#LOC]. | 19000 |
| 5460-0031 | Night Scan Chief NS1.8-3000M light tower with four 750 watt 115 volt MagnaFire quartz light heads. Control to be located next to the breaker box. Tower to be located [#LOC]. | 16178 |
| 5460-0032 | Command Light light tower model KL475HS. Includes (6) 750 watt Magnafire quartz halogen lights and a red strobe. Location: [#LOC]. | 19000 |
| 5460-0033 | Night Scan Powerlite NS4.5-3600M light tower with four 900 watt 230 volt MagnaFire quartz light heads. Control to be located next to the breaker box. Requires air brakes or air system and auxiliary air tank. Tower to be located [#LOC]. | 22927 |
| 5460-0034 | Command Light light tower model CL 615. Includes (4) 1500 watt quartz halogen lights (2) 1000 watt Metal Halide light heads and a green strobe. Locate [#LOC]. | 23867 |

| Item No. | Description | |
|---|---|---|
| 5460-0036 | Night Scan Chief NS2.3-3000M light tower with four 750 watt 115 volt MagnaFire quartz light heads. Control to be located next to the breaker box. Tower to be located [#LOC]. | 15210 |
| 5460-0038 | Command Light light tower model CL 615. Includes (6) 1000 watt quartz halogen lights and a green strobe. Location: [#LOC]. | 22566 |
| 5460-0039 | Will-Burt 5.4-17IWM Vertical Light Mast. Includes (4) 1500W Optimum light heads. Locate ceneterd (as applicable) in the forward dunnage pan area over LT/RT. Mast will run into transverse area. Controller to be in L3 forward area for use by the pump operator. | 24251 |
| 5460-0040 | Night Scan Powerlite NS4.5-6000OPT light tower with four 1500 watt 230 volt Optimum quartz light heads. Light heads and base covers painted job color. Control to be located next to the breaker box. Requires air brakes or air system and auxiliary air tank. Tower to be located [#LOC]. | 27432 |
| 5460-0042 | Will-Burt 5.4-17 Vertical Light Mast. Includes (6) 1500W Optimum light heads. Locate ceneterd (as applicable) in the forward dunnage pan area over [#LOC]. Mast will run into transverse area. Controls will be located next to breaker box. | 24251 |
| 5460-0043 | Night Scan Powerlite NS3.0-6000OPT light tower with four 1500 watt 230 volt Optimum quartz light heads. Control to be located next to the breaker box. Requires air brakes or air system and auxiliary air tank. Tower to be located [#LOC]. | 27214 |
| 5460-0045 | Night Scan Powerlite NS4.5-3000M light tower with four 750 watt 115 volt MagnaFire quartz light heads. Control to be located next to the breaker box. Requires air brakes or air system and auxiliary air tank. Tower to be located [#LOC]. | 25235 |
| 5460-0046 | Command Light light tower model KL450. Includes black powder coat finish with (6) 500 watt quartz halogen lights and a green strobe. Location: [#LOC]. | 16832 |
| 5460-0047 | Night Scan Chief NS2.3-6000OPT light tower with four 1500 watt 230 volt FRC Optimum quartz light heads. Control to be located next to the breaker box. Tower to be located [#LOC]. | 15223 |
| 5460-0048 | Command Light light tower model CL 615 with FRC Optimum lightheads. Includes (6) 1500 watt quartz halogen lights and an amber strobe. Location: [#LOC]. | 28074 |
| 5460-0050 | Night Scan Powerlite NS 3.0-3600M light tower with four 900 watt 230 volt MagnaFire quartz light heads. Control to be located next to the breaker box. Requires air brakes or air system and auxiliary air tank. Tower to be located [#LOC]. | 22353 |
| 5460-0053 | Command Light light tower model CL602A with Whelen PFP2AC lightheads. Includes (6) 150 watt LED lights and an amber strobe. Location: [#LOC]. | 37184 |
| 5460-0059 | Command Light Knight tower model KL465. Includes (6) 650 watt quartz halogen lights. Location: [#LOC]. | 15392 |
| 5460-0060 | Night Scan Powerlite NS3.0-4000OPT light tower with four 1000 watt 230 volt Optimum quartz light heads and D-TECH II safety system. Control to be located next to the breaker box. Requires air brakes or air system and auxiliary air tank. Tower to be located [#LOC]. | 32044 |
| 5460-0062 | Light tower disconnect. Provided junction box for 110V wiring and weather proof connector for control wires. | 410 |
| 5460-0064 | Night Scan Chief NS1.8-6000OPT light tower with four 1500 watt 230 volt FRC Optimum quartz light heads. Control to be located next to the breaker box. Requires air brakes or air system and auxiliary air tank. Tower to be located [#LOC]. | 15815 |
| 5460-0065 | Night Scan Chief 1.8-3600M light tower with four 900 watt 230 volt quartz light heads. Control to be located next to the breaker box. Tower to be located [#LOC]. | 17708 |
| 5460-0066 | Command Light light tower model CL602D with Whelen PFP2 12V lightheads. Includes (4) 150 watt LED lights and a amber strobe. Location: [#LOC]. | 30831 |
| 5460-0067 | Night Scan Chief NS2.3-600LED Whelen light tower with (4) 150 watt 12V Whelen Pioneer PFP2 LED light heads. Control to be located next to the breaker box if equipped or the forward wall of L1 if unit has no breaker box. Tower to be located [#LOC]. | 19451 |
| 5460-0069 | Command Light Knight tower model KL450. Includes (6) 500 watt quartz halogen lights and a amber strobe. Location: [#LOC]. | 15392 |
| 5460-0070 | Night Scan Chief NS1.8-3000-4-MGN-110v light tower with four 750 watt 115 volt MagnaFire quartz light heads. Control to be located next to the breaker box. Tower to be located [#LOC]. | 12536 |
| 5460-0071 | Night Scan Powerlite NS3.0-600WHL light tower with (4) 150 watt 120 volt Whelen Pioneer PFP2AC LED light heads. Control to be located next to the breaker box. Requires air brakes or air system and auxiliary air tank. Ahead of vista location requires riser. Tower to be located [#LOC]. | 34185 |
| 5460-0072 | Night Scan Powerlite NS3.0-900WHL light tower with (6) 150 watt 120 volt Whelen Pioneer PFP2AC LED light heads. Control to be located next to the breaker box. Requires air brakes or air system and auxiliary air tank. Ahead of vista location requires riser. Tower to be located [#LOC]. | 40436 |
| 5460-0073 | Night Scan Chief NS1.8-600WHL 120V Whelen light tower with (4) 150 watt 120 volt Whelen Pioneer PFP2AC LED light heads. Control to be located next to the breaker box. Tower to be located [#LOC]. | 28676 |
| 5460-0074 | Night Scan Chief NS1.8-600 Whelen light tower with (4) 150 watt 12V Whelen Pioneer PFP2 LED light heads. Control to be located next to the breaker box (L1 forward wall w/o breaker box). Tower to be located [#LOC]. | 19615 |
| 5460-0075 | Night Scan Powerlite NS4.5-900WHL light tower with (6) 150 watt 120 volt Whelen Pioneer PFP2AC LED light heads. Control to be located next to the breaker box. Requires air brakes or air system and auxiliary air tank. Tower to be located [#LOC]. | 41382 |

| Item No. | Description | |
|---|---|---|
| 5460-0076 | Will-Burt Night Scan Powerlite NS4.5-600WHL light tower with (4) 150 watt 120 volt Whelen Pioneer PFP2AC LED light heads. Control to be located next to the breaker box. Requires air brakes or air system and auxiliary air tank. Tower to be located [#LOC]. | 35033 |
| 5460-0077 | Night Scan Chief NS2.3-600LED Whelen light tower with (4) 150 watt 110V Whelen Pioneer PFP2AC LED light heads. Control to be located next to the breaker box. Tower to be located [#LOC]. | 28960 |
| 5460-0080 | Night Scan Chief NS2.3-920SPA 12V FRC light tower with (4) 230 watt 12 volt FRC Spectra LED light heads. Control to be located next to the breaker box. Tower to be located [#LOC]. | 26098 |
| 5460-0081 | Night Scan Chief NS2.3-920SPA 120V FRC light tower with (4) 230 watt 120 volt FRC Spectra LED light heads. Control to be located next to the breaker box. Tower to be located [#LOC]. | 26098 |
| 5460-0082 | Night Scan Powerlite NS3.0-920SPA light tower with (4) 230 watt 120 volt FRC Spectra LED light heads. Control to be located next to the breaker box. Requires air brakes or air system and auxiliary air tank. Ahead of vista location requires riser. Tower to be located [#LOC]. | 40594 |
| 5460-0083 | Night Scan Powerlite NS3.0-1380SPA light tower with (6) 230 watt 120 volt FRC Spectra LED light heads. Control to be located next to the breaker box. Requires air brakes or air system and auxiliary air tank. Ahead of vista location requires riser. Tower to be located [#LOC]. | 46636 |
| 5460-0085 | Night Scan Powerlite NS4.5-1380SPA light tower with (6) 230 watt 120 volt FRC Spectra LED light heads. Control to be located next to the breaker box. Requires air brakes or air system and auxiliary air tank. Tower to be located [#LOC]. | 46952 |
| 5460-0086 | Command Light light tower model CL 607. Includes (6) 750 watt ROM Magnafire quartz halogen lights and a green strobe. Location: [#LOC]. | 28252 |
| 5460-0087 | Command Light light tower model CL 607. Includes (6) 750 watt FRC Optimum quartz halogen lights and a green strobe. Location: [#LOC]. | 28252 |
| 5460-0089 | Command Light light tower model CL602A with FRC 120V Spectra lightheads. Includes (4) 220 watt LED lights. Location: [#LOC]. | 35903 |
| 5460-0090 | Command Light light tower model CL602A with FRC 120V Spectra lightheads. Includes (6) 220 watt LED lights. Location: [#LOC]. | 37184 |
| 5460-0091 | Command Light light tower model CL602D with FRC Spectra 12V lightheads. Includes (4) 220 watt LED lights. Location: [#LOC]. | 30831 |
| 5460-0092 | Command Light light tower model KL475OPT. Includes (6) 750 watt FRC Optimum quartz halogen lights. Location: [#LOC]. | 18633 |
| 5460-0093 | Command Light light tower model KL415A. Includes (6) 220 watt 120V FRC Spectra LED lights. Control to be located adjacent to breaker box. Location: [#LOC]. | 34563 |
| 5460-0094 | Command Light light tower model KL415A. Includes (6) 150 watt 120V Whelen Pioneer PFP2 LED lights. Control to be located adjacent to breaker box. Location: [#LOC]. | 34563 |
| 5460-0095 | Command Light light tower model KL415A. Includes (4) 220 watt 120V FRC Spectra LED lights. Control to be located adjacent to breaker box. Location: [#LOC]. | 28253 |
| 5460-0096 | Command Light light tower model KL415A. Includes (4) 150 watt 120V Whelen Pioneer PFP2 LED lights. Control to be located adjacent to breaker box. Location: [#LOC]. | 28253 |
| 5460-0097 | Command Light light tower model KL415D. Includes (4) 220 watt 12V FRC Spectra LED lights. Control to be located adjacent to breaker box. Location: [#LOC]. | 26676 |
| 5460-0098 | Command Light light tower model KL415D. Includes (4) 150 watt 12V Whelen Pioneer PFP2 LED lights. Control to be located adjacent to breaker box if equipped or L1 forward wall in available space if not otherwise specified. Location: [#LOC]. | 26676 |
| 5460-0100 | Command Light light tower model SL422D. Includes (2) 150 watt Whelen 12V Pioneer lights. Control to be located next to the breaker box. Location: [#LOC]. | 13741 |
| 5460-0101 | Command Light light tower model CL602A-2MH. Includes (4) 110V 220 watt FRC Spectra LED lights and (2) 230V 1000W metal halide lights. Location: [#LOC]. | 39058 |
| 5460-0102 | Night Scan Chief NS1.8-3000OPT light tower with four 750 watt FRC Optimum quartz light heads. Control to be located next to the breaker box. Tower to be located on [#LOC]. | 15557 |
| 5460-0103 | Night Scan Powerlite NS3.0-900WHL light tower with (6) 150 watt 120 volt Whelen Pioneer PFP2AC LED light heads. Control to be located next to the breaker box. Requires air brakes or air system and auxiliary air tank. Tower to be located rearward on flat roof (non vista) and mounted side to side and hinged to driver. Placement to allow 45 degree shield to be placed in normal vista rise locations to allow cab to appear to have vista roof. | 40436 |
| 5460-0106 | Strobe light for Command Light tower. Color: [#COL]. | 398 |
| 5460-0107 | Night Scan Powerlite NS2.3-225WHL Profiler light tower with three (3) 75 watt 12 volt Whelen Pioneer PFP1 light heads. Control to be located next to the breaker box (if equipped). Location: [#LOC]. | 23516 |
| 5460-0110 | Night Scan Powerlite NS3.0-5400M light tower with six 900 watt 230 volt MagnaFire quartz light heads. Control to be located next to the breaker box. Requires air brakes or air system and auxiliary air tank. [#LOC]. | 25439 |
| 5460-0111 | Command Light light tower model CL 609. Includes (6) 900 watt ROM Magnafire quartz halogen lights and a green strobe. Location: [#LOC]. | 28529 |
| 5460-0112 | Night Scan NS3.0-2250M Profiler light tower with three (3) 750 watt 115 volt MagnaFire quartz light heads. Control to be located next to the breaker box. Requires air brakes or air system and an auxiliary air tank. Location: [#LOC]. | 23248 |

| Item No. | Description | |
|---|---|---|
| 5460-0113 | Command Light light tower model KL475. Includes (6) 750 watt Magnafire quartz halogen lights. Location: [#LOC]. | 18633 |
| 5460-0114 | Night Scan Chief NS1.8-300LED Whelen light tower with (2) 150 watt 12 volt Whelen Pioneer PFP2 LED light heads. Control to be located adjacent to breaker box. Tower to be located [#LOC]. | 15503 |
| 5460-0116 | Night Scan Powerlite NS4.5-2100SPA light tower with (6) 350 watt 120 volt FRC Spectra LED light heads. Control to be located next to the breaker box. Requires air brakes or air system and auxiliary air tank. Tower to be located [#LOC]. | 48240 |
| 5460-0118 | Command Light light tower model SL447-FO. Includes (4) 750 watt 120V FRC Optimum quartz halogen lights. Control to be located next to the breaker box. Location: [#LOC]. | 11798 |
| 5460-0120 | Command Light light tower model CL602D with FRC Spectra 12V lightheads. Includes (4) 220 watt LED lights. Tower and lightheads powder coated black. Location: [#LOC]. | 33773 |
| 5460-0121 | Night Scan Chief NS2.3-500-4 LED light tower with (4) 125 watt 12V Will-burt XL 160 LED light heads. Control to be located next to the breaker box if equipped or the forward wall of L1 if unit has no breaker box. Tower to be located [#LOC]. | 18997 |
| 5460-0122 | Command Light light tower model CL615-4HM. Includes (2) 1500 watt quartz halogen lights and (4) 1000 watt Metal Halide light heads. Locate [#LOC]. | 30332 |
| 5460-0123 | Night Scan Chief NS2.3-460SPC light tower with (2) 230 watt 120 volt FRC Spectra LED light heads and a Sidewider standard defenition analog camera system. Tower control to be located next to the breaker box. Camera system controls located on interior desk area. Tower to be located [#LOC]. | 34957 |
| 5460-0124 | Command Light light tower model SL442D-FS. Includes (4) 230 watt FRC 12V Spectra lights. Control to be located next to the breaker box or L1 if not equipped. Location: [#LOC]. | 21021 |
| 5460-0125 | Command Light tower powder coat color in place of standard. Color: [#COL]. | 1453 |
| 5460-0126 | Command Light light tower model KL415A-FX. Includes (6) 335 watt 120V FRC Spectra Max LED lights. Control to be located adjacent to breaker box. Location: [#LOC]. | 35951 |
| 5460-0127 | Will-Burt 5.4-17 Vertical Light Mast. Includes (6) 750W Magnafire light heads. Locate centered in hosebed pan offset forward. Controls will be located next to breaker box. | 23492 |
| 5460-0128 | Will-Burt light tower black in place of standard. Includes covers mast and lights. | 2142 |
| 5460-0129 | Command Light light tower model KL415D-HF. Includes (4) FireTech LED lights. Control to be located adjacent to breaker box or L1 forward wall if not equipped with breaker box. Location: [#LOC]. | 27328 |
| 5460-0130 | Command Light light tower model SL442A-FS. Includes (4) 230 watt FRC 120V Spectra lights. Control to be located next to the breaker box. Location: [#LOC]. | 21021 |
| 5470-0000 | Receptacle twist lock 15A/110V 3 wire NEMA L5-15 with cover plate. Location: [#LOC]. | 349 |
| 5470-0001 | Receptacle twist lock 20A/110V 3 wire NEMA L5-20 with cover plate. Location: [#LOC]. | 364 |
| 5470-0002 | Receptacle twist lock 30A/110V 3 wire NEMA L5-30 with cover plate. Location: [#LOC]. | 392 |
| 5470-0004 | Receptacle household 20A/110V duplex 3-prong NEMA 5-20 with cover plate interior mounted wired to inlet receptacle. Location: [#LOC]. | 343 |
| 5470-0005 | Receptacle household 15A/110V Daniel Woodhead duplex 3 wire NEMA 5-15 w/Daniel Woodhead cover plate. Location: [#LOC] | 633 |
| 5470-0006 | Receptacle twist lock 15A/110V Daniel Woodhead 3 wire NEMA L5-15 w/Daniel Woodhead cover plate. Location: [#LOC] | 569 |
| 5470-0007 | Receptacle twist lock 15A/220V Daniel Woodhead 3 wire NEMA L6-15 w/Daniel Woodhead cover plate. Location: [#LOC] | 718 |
| 5470-0008 | Receptacle twist lock 20A/110V Daniel Woodhead 3 wire NEMA L5-20 w/Daniel Woodhead cover plate. Location: [#LOC]. | 586 |
| 5470-0009 | Receptacle twist lock 20A/220V Daniel Woodhead 3 wire NEMA L6-20 w/Daniel Woodhead cover plate. Location: [#LOC] | 775 |
| 5470-0010 | Receptacle twist lock 20A 110V/220V Daniel Woodhead 4 wire NEMA L14-20 w/Daniel Woodhead cover plate. Location: [#LOC] | 803 |
| 5470-0011 | Receptacle twist lock 15A/220V 3 wire NEMA L6-15 with cover plate. Location: [#LOC] | 507 |
| 5470-0012 | Receptacle twist lock 20A/220V 3 wire NEMA L6-20 with cover plate. Location: [#LOC]. | 507 |
| 5470-0013 | Receptacle twist lock 20A 110V/220V 4 wire NEMA L14-20 with cover plate. Location: [#LOC]. | 690 |
| 5470-0014 | Receptacle twist lock 30A/220V 3 wire NEMA L6-30 with cover plate. Location: [#LOC]. | 690 |
| 5470-0015 | Receptacle twist lock 30A 110V/220V 4 wire NEMA L14-30 with cover plate. Location: [#LOC] | 684 |
| 5470-0016 | Receptacle shoreline 30A/110V with auto transfer switch. The receptacle shall be located [#LOC]. | 1168 |
| 5470-0017 | Receptacle household 20A/110V duplex 3-prong NEMA 5-20 with cover plate. Location: [#LOC]. | 332 |
| 5470-0018 | Receptacle shoreline 50A/220V with auto transfer switch. The receptacle shall be located [#LOC]. | 1178 |
| 5470-0019 | Receptacle FirePower 20A/110V model FP-11 with cover plate. Location: [#LOC]. | 402 |
| 5470-0020 | Receptacle 12V military with A pin Positive B pin Negative C pin Blank. Location: [#LOC] | 275 |
| 5470-0021 | 12 volt power point wired battery hot. Location [#LOC] | 67 |
| 5470-0023 | Fuse 15A in B1 compt for 12V power point receptacle. | 105 |
| 5470-0024 | Receptacle 15A/110V duplex with (1) 3-prong NEMA 5-15 and (1) twist lock NEMA L5-15 with cover plate. Location: [#LOC]. | 372 |
| 5470-0025 | Receptacle household 30A/110V 3-prong NEMA 5-30 with cover plate. Location: [#LOC] | 379 |

| Item No. | Description | |
|---|---|---|
| 5470-0026 | Receptacle household 15A/110V duplex 3-prong NEMA 5-15 with cover plate interior mounted wired to inlet receptacle. Location: [#LOC]. | 318 |
| 5470-0027 | Household switch with weaterproof cover located near receptacle at [#LOC]. Switch to operate single leg of this duplex receptacle. | 572 |
| 5470-0028 | Receptacle household 20A/110V Daniel Woodhead duplex 3 wire NEMA 5-20 w/Daniel Woodhead cover plate. Location: [#LOC]. | 651 |
| 5470-0029 | Receptacle Hubbell twist lock 20A 110V/250V 3 wire NON-NEMA with cover plate. Location: [#LOC]. | 433 |
| 5470-0030 | Receptacle twist lock 15A/110V 3 wire NEMA L5-15 with yellow Daniel Woodhead cover plate. Location: [#LOC]. | 425 |
| 5470-0031 | Receptacle twist lock 15A/110V duplex 3 wire NEMA L5-15 with yellow Daniel Woodhead cover plate. Location: [#LOC]. Top duplex will be hooked to toogle switch next to it. | 718 |
| 5470-0032 | Receptacle 12V Marinco model 2018BR with model 2018MB cover wired battery hot. Includes model 2018BP male connector. Location: [#LOC]. | 481 |
| 5470-0034 | Receptacle shoreline 50A/220V. The receptacle shall be located [#LOC]. No additional breaker box is included in this code. | 316 |
| 5470-0036 | 9 outlet Stanley model 31610 household 15A/110V power strip wired to inlet receptacle. Location: [#LOC]. | 207 |
| 5470-0039 | Receptacle NON-NEMA locking 20A 120V/250V Daniel Woodhead model 67W08 w/Daniel Woodhead cover plate. Location: [#LOC]. | 803 |
| 5470-0040 | Receptacle twist lock 50A/220V 3 wire NEMA L6-50 with cover plate. Location: [#LOC]. | 839 |
| 5470-0041 | Receptacle household 15A/110V duplex 3-prong NEMA 5-15 with cover plate interior mounted wired to inlet receptacle. Location: R1 forward wall 24" up. | 318 |
| 5470-0042 | Auto-Eject receptacle inlet 30 amp 120 volt with auto transfer switch. The receptacle shall be located [#LOC] and with a [#COL] cover. | 1698 |
| 5470-0047 | 6 outlet household 15A/110V power strip wired to inlet receptacle. Location: [#LOC]. | 238 |
| 5470-0048 | Service 30A/220V 4 wire with junction box. Location: [#LOC]. | 533 |
| 5470-0051 | 6 outlet household 20A/110V power strip wired to inlet receptacle. Location: [#LOC]. | 238 |
| 5470-0053 | Receptacle inlet 110 VAC L5-30 Amp twist lock with a [#COL] cover. Location: [#LOC]. | 319 |
| 5470-0054 | Receptacle household 15A/110V duplex 3-prong NEMA 5-15 with cover plate interior mounted wired to generator (not wired to inlet/shoreline). Location: [#LOC]. | 318 |
| 5470-0055 | Receptacle household 15A/110V duplex 3-prong NEMA 5-15 with cover plate. This receptacle shall be GFCI protected and have a push button reset on the receptacle. Location: [#LOC]. | 345 |
| 5470-0057 | Receptacle household 20A/110V duplex 3-prong NEMA 5-20 with cover plate interior mounted wired to generator (not wired to inlet/shoreline). Location: [#LOC]. | 332 |
| 5470-0060 | Receptacles household 15A/110V duplex 3-prong NEMA 5-15 and 20A/110V twist lock receptacle NEMA L5-20 with cover plates. The receptacles shall be GFCI protected. The 5-15 receptacle shall have a push button reset on the receptacle the L5-20 shall be GFCI protected at the breaker. Location: (1) set of (2) 5-15 and (1) L5-20 GFCI receptacles each side in cab wheel well area. | 888 |
| 5470-0061 | Grainger model 2MV42; 6 outlet household 15A/110V power strip wired to inlet receptacle. Location: [#LOC]. | 374 |
| 5470-0066 | 12 volt power point wired battery hot. Location: in rear walkin body on forward wall above desk driver side. | 67 |
| 5470-0067 | 12 volt power point wired battery hot. Location: Inside walkin body compartment DS2 low on back wall as far forward as posable. REF customer drawing | 67 |
| 5470-0068 | 12 volt power point wired battery hot. Location: Inside walkin body compartment OS2 low on back wall as far forward as posable. REF customer drawing | 67 |
| 5470-0071 | Receptacle household 15A/110V duplex 3-prong NEMA 5-15 with cover plate interior mounted wired to inlet receptacle and shall include as part of the receptacle 15 amp over current protection. This receptacle shall be GFCI protected and have a push button reset on the receptacle. Location: [#LOC]. | 376 |
| 5470-0072 | Each receptacle shall be labeled to identify the power source (Shoreline Generator). | 138 |
| 5470-0075 | Receptacle household 30A/220V 3 wire NEMA 6-30 with cover plate. Location: [#LOC]. | 690 |
| 5470-0076 | Receptacle Hubbell twist lock 15A/110V 3 wire NEMA L5-15 with cover plate. Location: [#LOC]. | 433 |
| 5470-0077 | Receptacle Hubbell twist lock 20A/250V 4 wire NEMA L15-20 with cover plate. Location: [#LOC]. | 433 |
| 5470-0080 | Receptacle; Schuko 250V model 70310 with weatherproof cap. Location: [#LOC]. | 507 |
| 5470-0081 | Receptacle household 20A/110V duplex 3-prong NEMA 5-20 with cover plate exterior mounted wired to inlet receptacle. Location: [#LOC]. | 343 |
| 5470-0082 | Receptacle 20A/220V 3 wire NEMA 6-20 with cover plate wired to inlet receptacle. Location: [#LOC]. | 507 |
| 5470-0084 | Receptacle household 20A/110V double gang (four outlets) 3-prong NEMA 5-20 with cover plate interior mounted wired to inlet receptacle. Location: [#LOC]. | 669 |
| 5500-0004 | Code3 V-Con #3692 siren recessed mounted. | 841 |
| 5500-0005 | Federal Signal electronic EQ2B-EF siren. Includes 200 watt speaker with square "E-ONE" grille. Speaker location: [#LOC]. | 4235 |
| 5500-0006 | Federal electronic e-Q2B siren. Includes "Q" grille. Speaker location: [#LOC]. | 4801 |
| 5500-0007 | Federal MS4000 siren recessed mounted. | 956 |

| Item No. | Description | |
|---|---|---|
| 5500-0009 | Federal PA300 electronic siren recessed mounted. | 790 |
| 5500-0010 | Federal Q2B siren - flush mounted in bumper. Location: [#LOC]. | 3374 |
| 5500-0011 | Federal Q2B siren - Pedestal mounted on bumper. Location: [#LOC]. | 3040 |
| 5500-0012 | Prewire for Federal Q2B mechanincal siren. Driver side front bumper. | 315 |
| 5500-0015 | Whelen model 295SLSA1 siren with microphone (replaced 295HFSA1). | 1048 |
| 5500-0016 | Code 3 V-Con #3672 siren recessed mounted. | 841 |
| 5500-0017 | Whelen model 295HFSM1 siren with mechanical siren tone and microphone. N/A in California. | 1151 |
| 5500-0019 | Code 3 #3997 siren. Requires (1) 200 watt or (2) 100 watt speakers. | 1932 |
| 5500-0020 | Federal PA4000 siren recessed mounted. Includes horn ring select switch (Tap II / DOT / electronic air horn sound) on face of siren. Note: Switch will be non-functional when E-ONE installed horn ring select switch is supplied. | 843 |
| 5500-0022 | Federal PA300 siren mounted on electrical access panel between the driver and officer front seats. | 790 |
| 5500-0023 | Unitrol model UTM1 siren with option to disable Hi/Low feature (UOP09). Route radio re-broadcast cable to officer side overhead for OCFA radio installation. | 842 |
| 5500-0026 | (MS100 speakers Obsolete from Vendor)Federal electronic Q2B-EF siren. Includes two MS100 speakers with square "EF" grills. Speaker location: [#LOC]. | 4382 |
| 5500-0027 | Signal Vehicle Products model SS741MG siren recessed mounted. | 665 |
| 5500-0030 | Code 3 #3997R siren. Requires (1) 200 watt or (2) 100 watt speakers. | 1932 |
| 5500-0031 | Whelen model 295HFSA7 siren with microphone. | 1638 |
| 5500-0032 | Federal / Unitrol #U480K-4 siren. | 1736 |
| 5500-0034 | Federal Rumbler secondary siren. Includes amp timer and two speakers mounted under vehicle. Requires control switch. | 1382 |
| 5500-0036 | Whelen model 295HFSC9 siren with microphone. N/A in California. | 1316 |
| 5500-0037 | Federal PA300 siren recessed mounted. Microphone to be removed and a plug is to be installed in the wiring hole. | 790 |
| 5500-0038 | Federal / Unitrol #UTM4 siren. | 1755 |
| 5500-0040 | Powercall DX5200 siren control. For use with (1) 200 watt speaker or up to (2) 100W speakers. | 1053 |
| 5500-0041 | Federal electronic Q2B-EF siren. Includes two (2) ES100 speakers with square "E-ONE" grilles. Speaker location: [#LOC]. | 4382 |
| 5500-0044 | Whelen model 295HFSA7 siren with microphone. Microphone to be removed (shipped loose) and a plug is to be installed in the wiring hole. | 1638 |
| 5500-0045 | Whelen model 295SLSC1 siren with plug-in microphone. N/A in California. | 1048 |
| 5500-0048 | Federal PA300 100W siren recessed mounted. | 740 |
| 5500-0049 | Whelen Howler secondary siren. Includes amp timer and two speakers mounted under vehicle. | 1398 |
| 5500-0050 | Integrated Siren System with dual control heads. No microphone or volume control. | 966 |
| 5500-0051 | Federal PA300R siren with single control. PA control and volume switch located on electrical access panel. | 949 |
| 5500-0052 | Federal PA640 electronic siren recessed mounted. | 790 |
| 5500-0054 | Federal / Unitrol #UTM1 siren. | 1268 |
| 5500-0059 | Whelen model 295SL100 siren with microphone (replaced 295HF100). | 989 |
| 5500-0060 | Whelen Howler secondary siren. Includes amp timer and two speakers mounted under gravelshield. | 1398 |
| 5500-0062 | Screaming Eagle flange mount siren in bumper. Location: [#LOC]. | 3397 |
| 5500-0063 | Federal electronic Q2B-EF siren. Includes two ES100 speakers. Speaker location: [#LOC]. | 4382 |
| 5500-0066 | Whelen model 295SLSA1 siren without microphone. | 1048 |
| 5500-0067 | Whelen model 295SLSC1 siren without microphone. N/A in California. | 1048 |
| 5500-0068 | Pre-wire for Tomar Emitter. Coil 4' of wire in driver's overhead panel. | 315 |
| 5500-0069 | Prewire for Federal Q2B mechanincal siren. Officer side front bumper. | 315 |
| 5500-0070 | Federal Signal electronic EQ2B-EF siren. Includes 200 watt speaker with "EF" grille. Speaker location: [#LOC]. | 4235 |
| 5500-0072 | Powercall X71 siren control. For use with (1) 100W speaker. Locate switch on officer side switch panel. | 667 |
| 5500-0074 | Whelen model 295HFS2 siren with flush mount siren head remote amplifier and microphone. N/A in California. | 1205 |
| 5500-0075 | Carson SA-400M siren recessed mounted. | 1300 |
| 5500-0076 | Federal Q2B siren - flush mounted in bumper. Incudes diamond plate housing for siren to space outward to clear in bumper options. Location: center front bumper. | 3581 |
| 5500-0080 | Federal Q2B siren - Recess mounted in bumper. Front of grille behind circular bumper cut-out. Requires 12" heavy duty bumper. Location: [#LOC]. | 3982 |
| 5500-0081 | Powercall 6 Adam siren. For use with (1) 200 watt speaker or (2) 100W speakers. | 1028 |
| 5500-0083 | Carson SA-441M remote siren. | 1583 |
| 5500-0084 | Whelen Alpha12S siren located [#LOC] with a Federal Signal ES100 speaker located on the driver side rear of body. | 1448 |
| 5500-0085 | Screaming Eagle nesting eagle mount siren in bumper. Location: [#LOC]. | 3841 |
| 5500-0088 | Q2B Siren Focuser chrome plated housing to direct sound forward. | 772 |

| Item No. | Description | |
|---|---|---|
| 5510-0002 | Speaker Federal BP200 mounted through bumper. Location: [#LOC]. | 1321 |
| 5510-0003 | Speaker Federal CP100S pedestal mounted. Location: [#LOC]. | 863 |
| 5510-0006 | Speaker Federal ES100-MSBMT. Location: [#LOC]. | 513 |
| 5510-0007 | Speaker Cast Products SA2401 100W thru bumper. Location: [#LOC]. | 576 |
| 5510-0008 | Speaker Cast Products SA3501 100W through bumper. Location: [#LOC]. | 638 |
| 5510-0009 | Federal TS100-N speaker mounted on pump panel. | 522 |
| 5510-0012 | Speaker Federal TS100 through bumper with E-ONE grille. Location: [#LOC]. | 612 |
| 5510-0013 | Speaker Federal Dynamax MS100-EF thru bumper. Location: [#LOC]. | 612 |
| 5510-0016 | Code 3 PB100C electronic siren speaker recessed in front bumper. Location: [#LOC]. | 601 |
| 5510-0017 | Speaker Cast Products SA2403 100W thru bumper. Location: [#LOC]. | 576 |
| 5510-0019 | University Sound speaker model MIS8C with seperate on / off switch. Locate on driver side upper module area with wire terminating in the center overhead console. | 386 |
| 5510-0021 | Speaker Federal TS100-N mounted on driver side front compartment face. | 522 |
| 5510-0023 | Speaker Atkinson Dynamics (Federal) mounted on pump panel. | 702 |
| 5510-0026 | Code 3 FM100C electronic siren speaker recessed in front bumper. Location: [#LOC]. | 692 |
| 5510-0027 | Speaker volume control on pump panel for pump panel mtd speaker. Locate next to speaker. Includes 16-18 gauge audio cable run from volume control to center overhead area leave a 30" coil of wire. | 498 |
| 5510-0028 | Speaker Federal Dynamax ES100. Located officer's side behind tow hook. Navistar 4400 chassis only. | 612 |
| 5510-0029 | Speaker Federal Signal Dynamax ES100 with "E-ONE" grille through bumper. Location: [#LOC]. | 612 |
| 5510-0031 | Whelen SA314P electronic siren speaker recessed in front bumper with polished trim ring. Location: [#LOC]. | 854 |
| 5510-0034 | Whelen SA315P electronic siren speaker mounted behind front bumper cut-out. Location: [#LOC]. | 566 |
| 5510-0038 | Speaker Federal Dynamax ES100 with "E-ONE" grille. Located Driver side recess behind pump panel. | 666 |
| 5510-0041 | Speaker Federal Signal Dynamax ES100. Location: [#LOC]. | 612 |
| 5510-0042 | Speaker Atkinson Dynamics (Federal) model AD-SF-25 flush mounted with volume controls. Location: [#LOC]. | 776 |
| 5510-0044 | Whelen SA315P electronic siren speaker located behind front bumper. Location: [#LOC]. | 566 |
| 5510-0045 | Speaker Federal Signal Dynamax ES100 with "E-ONE" grille. Location: [#LOC]. | 612 |
| 5510-0046 | Speaker Federal BP100 mounted through bumper. Location: [#LOC]. | 839 |
| 5510-0047 | Speakers (Pair) Federal Signal Dynamax ES100 through bumper with smooth plate grille painted same color as the heavy duty bumper and sufficient surface area for lettering. Locate both speakers next to each other center of the bumper with one common grill covering them. | 1450 |
| 5510-0049 | Whelen SP123BMC electronic siren speaker recessed in front bumper. Location: [#LOC]. | 634 |
| 5510-0050 | Speaker PowerCall Feniex with "E-ONE" grille through bumper. Location: [#LOC]. | 433 |
| 5550-0006 | Whelen LED 6/2/2 lower level warning light package. Includes (6) 600 series (2) 400 series and (2) 500 series light heads w/weatherproof connectors. Locate side facing lights: [#LOC]. | 3631 |
| 5550-0007 | Whelen LED 8/2 lower level warning light package. Includes (8) 600 series and (2) 500 series light heads w/weatherproof connectors. Locate side facing lights: [#LOC]. | 3911 |
| 5550-0008 | Whelen strobe/LED 6/2/2 lower level warning light package. Includes (6) 600 series strobes (2) 400 series strobes and (2) 500 series LED light heads w/weatherproof connectors and required power supplies. Locate side facing lights: [#LOC]. | 3504 |
| 5550-0010 | Whelen 600 series LED lower level warning light package. Includes (10) LED light heads w/weatherproof connectors. Locate side facing lights: [#LOC]. | 4302 |
| 5550-0012 | Whelen 600 series strobe lower level warning light package. Includes (10) strobe lights w/weatherproof connectors and required power supplies. Locate side facing lights: [#LOC]. | 4048 |
| 5550-0013 | Federal Signal strobe/halogen lower level warning light package. Includes (8) strobe (2) GH1F halogen lts and required power supplies. Locate side facing lights: [#LOC]. | 3416 |
| 5550-0014 | Federal Signal GS5 strobe lower level warning light package. Includes (10) Lights and required power supplies. Locate side facing lights: [#LOC]. | 3899 |
| 5550-0021 | Federal Signal GL5 LED lower level warning light package. Includes Ten (10) GL5-R lights. Locate side facing lights: [#LOC]. | 3120 |
| 5550-0028 | Code3 strobe/halogen 6/4 lower level warning light package. Includes (6) 40 series strobe lights and (4) OL135 halogen lights and required power supplies. Locate side facing lights: [#LOC]. | 5276 |
| 5550-0029 | Code3 halogen 4/6 lower level warning light package. Includes Includes (6) 41 series and (4) OL135 halogen lights. Locate side facing lights: [#LOC]. | 2651 |
| 5550-0030 | Code3 model 65 red LED lower level warning light package. Includes (10) LED lights. Locate side facing lights: [#LOC]. | 4545 |
| 5550-0049 | Code3 LED 6/2/2 lower level warning light package. Includes (8) model 65 red LED and (2) LXEX1F-R LED lights. Includes chrome bezels where applicable. Locate side facing lights: [#LOC]. | 3596 |
| 5550-0052 | Flash rate for Federal LED lower level warning lights to be set at pattern 2 (102 TFPM). | 102 |
| 5550-0053 | Flash rate for Federal LED lower level warning lights to be set at pattern 8 (150 FPM). | 102 |
| 5550-0054 | Whelen 600 series Super LED lower level warning light package. Includes (10) red LED light heads w/chrome flanges. Locate side facing lights: [#LOC]. | 3415 |

| Item No. | Description | |
|---|---|---|
| 5550-0055 | Federal Signal QuadraFlare LED lower level warning light package. Includes (10) QL64XF-R LED light heads with bezels. Locate side facing lights: [#LOC]. | 2856 |
| 5550-0059 | Whelen Super LED lower level warning light package. Includes (8) red 600 LED light heads and (2) red 500 LED light heads w/chrome flanges. Locate side facing lights: [#LOC]. | 3227 |
| 5550-0060 | Code3 LED 6/2/2 lower level warning light package. Includes (4) 65BZR (2) 65FR (2) 85BZR low on rear and (2) LXEX1F-R. Locate side facing lights: [#LOC] | 3983 |
| 5550-0066 | Tomar lower level warning light package. Includes RECT-46 LED in front quad bezels (to alternate flash drv side blue ofc side red) RECT-79SS on ends of bumper gravel shield (clear frt red rear) in angled forward bezel RECT-37SS on side of cab down low just ahead of rear cab doors and in rear ww offset forward (red frt/ blue rear) RECT-25 LED (red) in rubrail side facing at rear of body RECT-46 LED (drv side blue / ofc side red) rear facing down low three 780-1228-WP power supplies 930DM-LED-LB flasher for frt lts and chrome flanges on applicable lts. | 8518 |
| 5550-0067 | Flash rate for Federal QuadraFlare LED lower level warning lights to be set at pattern 4 (75 QFPM). | 102 |
| 5550-0069 | Flash rate for Federal QuadraFlare LED lower level warning lights to be set at pattern 5 (150 DFPM). | 102 |
| 5550-0070 | Whelen LED lower level NFPA warning light package (includes upper rear compartment face mounted lights that are wired into lower level switching). Includes (14) lights (8/6). | 5640 |
| 5550-0072 | Whelen 600 series Super LED lower level warning light package. Includes (8) red/amber and (2) red LED light heads w/chrome flanges. Locate side facing lights: [#LOC]. | 3849 |
| 5550-0073 | Whelen Super LED lower level warning light package. Includes (8) 600 Super LED light heads and (2) 900 Super LED light heads w/chrome flanges where applicable. Locate side facing lights: [#LOC]. | 3758 |
| 5550-0074 | Whelen Super LED 4/2/2/2 lower level warning light package. Includes (4) 600 (2) 900 split (2)700 split and (2) 500 LED light heads w/weatherproof connectors. Locate side facing lights: at forward most position (900) centered in rear wheelwell (700) and in rubrail (500) side facing at rear of body. | 4968 |
| 5550-0077 | Federal Signal QuadraFlare LED upper level side warning light package. Includes (4) QL64XF red LED light heads with bezels. Located 2 side facing on Driver and Officer side upper rear corners. | 1377 |
| 5550-0083 | Federal Signal QuadraFlare LED upper level rear warning light package. Includes (2) QL64XF red LED light heads with bezels. Located (1) driver and (1) officer upper rear corners. | 691 |
| 5550-0086 | Whelen 900 series Super LED upper level side warning light package. Includes (2) red Whelen 900 Super LED model 90RR5FRR lights. Includes weatherproof connectors. Located (1) on the driver and (1) on the officer side upper rear side corners. | 1259 |
| 5550-0088 | Whelen 900 series Super LED upper level rear panel warning light package. Includes (2) red Whelen 900 Super LEDs lights model 90RR5FRR. Includes weatherproof connectors. Located (1) driver and (1) officer upper rear corners. | 1259 |
| 5550-0091 | Whelen strobe/LED 6/2/2 lower level warning light package. Includes (6) 600 series strobes (2) 700 series strobes and (2) 500 series LED light heads w/weatherproof connectors and required power supplies. Locate side facing lights: [#LOC]. | 3582 |
| 5550-0092 | Whelen strobe/LED 6/2/2 lower level warning light package. Includes (6) 600 series super LED (2) 700 series split lens strobes and (2) 500 series super LED light heads w/weatherproof connectors and required power supplies. Locate side facing lights: [#LOC] | 4085 |
| 5550-0093 | Whelen Super LED lower level warning light package. Includes (6) 600 LED red light heads (2) 400 LED red light heads and (2) 500 red LED light heads w/chrome flanges. Locate side facing lights: [#LOC] | 3079 |
| 5550-0094 | Federal Signal strobe lower level warning light package. Includes (8) GS5 strobes and (2) GS2 strobes lts. All lenses to be blue except mid-body which are red. Locate side facing lights: [#LOC] | 3899 |
| 5550-0095 | Whelen Super LED lower level warning light package. Includes (7) 600 red LED light heads and (3) 600 blue LED light head w/chrome flanges. Locate side facing lights: [#LOC] | 3415 |
| 5550-0096 | Weldon Diamondback V46 LED lower level warning light package. Includes (10) red LED light heads w/chrome flanges. Locate side facing lights: [#LOC]. | 3468 |
| 5550-0097 | Whelen 400 series linear Super LED lower level warning light package. Includes (10) red LED light heads w/chrome flanges. Locate side facing lights: [#LOC]. | 5222 |
| 5550-0099 | Whelen Super LED lower level warning light package. Includes (4) red 600 LED light heads (4) red/clear 600 split LED light heads and (2) red 500 LED light heads w/chrome flanges. Locate side facing lights: [#LOC]. | 4288 |
| 5550-0101 | Whelen Super LED lower level warning light package. Includes (6) 600 red LED light heads (2) 900 red LED light heads and (2) 500 red LED light heads w/chrome flanges. Locate side facing lights: [#LOC]. | 3392 |
| 5550-0102 | Whelen Super LED lower level warning light package. Includes (6) 600 LED light heads (2) 900 LED light heads and (2) 500 LED light heads w/chrome flanges. Locate side facing lights: [#LOC]. | 3392 |
| 5550-0103 | Whelen Super LED lower level warning light package. Includes (8) 600 Super LED light heads and (4) 500 Super LED light heads w/chrome flanges where applicable. Locate side facing lights: [#LOC]. | 4450 |

| Item No. | Description | |
|---|---|---|
| 5550-0104 | Whelen 600 series Super LED lower level warning light package. Includes (8) red and (2) red/white LED light heads w/chrome flanges. Locate side facing lights: [#LOC]. | 3984 |
| 5550-0106 | Whelen Super LED lower level warning light package. Includes (6) 600 red LED light heads (2) 400 amber LED light heads and (2) 500 red LED light heads w/chrome flanges. Locate side facing lights: [#LOC]. | 3079 |
| 5550-0109 | Federal Signal QuadraFlare LED lower level warning light package. Includes (5) QL64XF-R LED light heads with bezels and (5) QL64XF-B LED light heads with bezels. Lights to alternate red/blue around unit; see specificaton. Locate side facing lights: [#LOC]. | 2856 |
| 5550-0110 | Whelen Super LED lower level warning light package. Includes (4) red 600 LED light heads (4) blue 600 LED light heads (1) red 500 LED light head and (1) blue 500 LED light head. LIghts to alternate red/blue around unit; see specification. Locate side facing lights: [#LOC]. | 3227 |
| 5550-0112 | Federal Signal QuadraFlare LED upper level side warning light package. Includes (2) QL97XF red LED light heads with bezels. Located (1) side facing on Driver and Officer side upper rear corners. | 994 |
| 5550-0113 | Federal Signal QuadraFlare LED upper level rear warning light package. Includes (2) QL97XF red LED light heads with bezels. Located (1) Driver and (1) Officer upper rear corners. | 994 |
| 5550-0114 | Weldon Diamondback V46 LED lower level warning light package. Includes (10) red LED light heads w/clear lenses and chrome flanges. Locate side facing lights: [#LOC]. | 3468 |
| 5550-0117 | Whelen Super LED lower level warning light package. Includes (6) 600 Super LED light heads (2 red forward/2 red rearward/2 amber rearward) and (6) side facing 500 Super LED red light heads w/chrome flanges where applicable. Requires additional side facing lights midship to meet blocking mode. Locate side facing lights: [#LOC]. | 4402 |
| 5550-0123 | Whelen M6 Super LED lower level warning light package. Includes (8) red M6R LED light heads and (2) red 500 Super LED light heads w/chrome flanges. Locate side facing lights: [#LOC]. | 3594 |
| 5550-0125 | Whelen M6RC Super LED lower level warning light package. Includes (8) red M6RC LED light heads and (2) red 500 Super LED light heads w/chrome flanges and clear lenses. Locate side facing lights: [#LOC]. | 3594 |
| 5550-0127 | Federal Signal QuadraFlare LED lower level warning light package. Includes (10) QL64XFC-R LED light heads with clear lenses and bezels. Locate side facing lights: [#LOC]. | 2856 |
| 5550-0128 | Whelen Super LED lower level warning light package. Includes (6) red 600 LED light heads (2) red LIN3 lights and (2) red 500 LED light heads w/chrome flanges. Locate side facing lights: [#LOC]. | 3227 |
| 5550-0129 | Whelen 600 series Super LED lower level warning light package. Includes (5) red LED light heads w/chrome flanges and (5) blue LED light heads w/chrome flanges. LIghts to alternate red/blue around unit; see specification. Locate side facing lights: [#LOC]. | 3415 |
| 5550-0130 | Weldon Diamondback V46W-C/V26W-C LED lower level warning light package. Includes (8) red V46 LED light heads w/clear lenses and (2) red V26 LED light heads w/clear lenses. Locate side facing lights: [#LOC]. | 3350 |
| 5550-0131 | Whelen Super LED lower level warning light package. Includes (8) 600 LED light heads (7 red1 blue rear facing officer side) and (2) red 500 LED light heads w/chrome flanges. Locate side facing lights: [#LOC]. | 3227 |
| 5550-0132 | Whelen Super LED lower level warning light package. Includes (8) red 600 LED light heads and (2) red TIR3 LED light heads grommet mounted. Locate side facing lights: [#LOC]. | 3073 |
| 5550-0135 | Whelen Super LED lower level warning light package with clear lenses. Includes (6) red 600 LED light heads (2) red/clear 600 split LED light heads (side facing forward position) and (2) red 500 LED light heads w/chrome flanges. Locate side facing lights: [#LOC]. | 3964 |
| 5550-0148 | Whelen M6 Super LED lower level warning light package. Includes (6) red M6RC LED light heads with clear lenses and chrome flanges (4) split red/clear M6D light heads with clear lenses and chrome flanges. See specifications for locations of split lights. Locate side facing lights: [#LOC]. | 4104 |
| 5550-0149 | Whelen M6 Super LED lower level warning light package. Includes (10) red M6R LED light heads w/chrome flanges. Locate side facing lights: [#LOC]. | 4049 |
| 5550-0152 | Federal Signal QuadraFlare LED lower level warning light package. Includes (8) QL64XF-R red LED light heads with bezels and (2) forward facing QL64SFC-RC split red/clear LED light heads with bezels. Locate side facing lights: [#LOC]. | 2963 |
| 5550-0154 | Whelen M6 Super LED lower level warning light package. Includes (1) red M6RC LED light head with clear lens and chrome flange (1) blue M6BC with clear lens and chrome flange and (8) split red/clear M6D light heads with clear lenses and chrome flanges. Locate side facing lights: [#LOC]. | 4394 |
| 5550-0155 | Whelen Super LED lower level warning light package with clear lenses. Includes (8) 600 LED light heads (6 red2 blue; (1) forward and (1) rearward facing officer side) and (2) red 500 LED light heads w/chrome flanges. Locate side facing lights: [#LOC]. | 3227 |
| 5550-0159 | Whelen M6 Super LED lower level warning light package. Includes (6) M6RC red LED light heads with clear lenses (2) M9RC red LED light heads with clear lenses and (2) red 500 Super LED light heads w/chrome flanges and clear lenses. Locate side facing lights: [#LOC]. | 4619 |
| 5550-0163 | Whelen M6 Super LED lower level warning light package. Includes (8) red/blue M6J LED light heads and (2) red/blue 500 Super LED light heads w/chrome flanges and clear lenses. Locate side facing lights: at forward most position in rear wheelwell offset to front and side facing at rear of body in rubrail if equipped. | 3997 |

| Item No. | Description | |
|---|---|---|
| 5550-0164 | Whelen 600 series Super LED lower level warning light package. Includes (10) red LED light heads w/clear lenses and chrome flanges. Locate side facing lights: [#LOC]. | 3415 |
| 5550-0169 | Federal Signal QuadraFlare LED lower level warning light package. Includes (10) QL64XF-B blue LED light heads with bezels. Locate side facing lights: [#LOC]. | 2856 |
| 5550-0170 | Whelen Super LED lower level warning light package. Includes (8) 600 Series (4) red & (4) blue (2) 400 Series (1) red & (1) blue and chrome flanges alternating in colors. Locate side facing lights: at forward most position in rear wheelwell offset to front and on tailboard mounted light box above rear tailboard. Lights will alternate color from light to light. All lights will have clear lenses with colored LEDs. | 3415 |
| 5550-0171 | Whelen Super LED lower level warning light package. Includes (4) red 600 LED light heads (4) blue 600 LED light heads (1) red 500 LED light head and (1) blue 500 LED light head. Lights to be driver side red officer side blue; see specification. Locate side facing lights: [#LOC]. | 3227 |
| 5550-0173 | Whelen M6 Super LED lower level warning light package. Includes (8) red M6R LED light heads and (2) red M2R LED light heads. Locate side facing lights: [#LOC]. | 3594 |
| 5550-0178 | Whelen Super LED lower level warning light package with clear lens. Includes (8) red 600 LED light heads and (2) red 500 LED light heads w/chrome flanges. Locate side facing lights: [#LOC]. | 3227 |
| 5550-0180 | Whelen M6 Super LED lower level warning light package. Includes (10) red M6 LED light heads w/clear lenses and chrome flanges. Locate side facing lights: [#LOC]. | 4049 |
| 5550-0181 | Whelen Super LED lower level warning light package with clear lenses. Includes (8) red/clear M6 split LED light heads and (2) split red/clear M2 LED light heads w/chrome flanges. State of Maryland only. Locate side facing lights: [#LOC]. | 4433 |
| 5550-0183 | Whelen M6 Super LED lower level warning light package. Includes (8) red M6R LED light heads and (2) red TIR3 LED light heads. Locate side facing lights: [#LOC]. | 3594 |
| 5550-0188 | Whelen M6 Super LED lower level warning light package. Includes (6) red M6R and (4) blue M6B LED light heads w/chrome flanges. See specifications for color locations. Locate side facing lights: [#LOC]. | 4049 |
| 5550-0189 | Whelen Super LED lower level warning light package. Includes (7) red 600 LED light heads (1) blue 600 LED light heads and (2) red 500 LED light heads. Locate side facing lights: [#LOC]. | 3227 |
| 5550-0190 | Federal Signal QuadraFlare LED lower level warning light package. Includes (5) QL64XF-R LED light heads with bezels and (5) QL64XF-B LED light heads with bezels. Lights to alternate red/blue around unit; see specificaton. Locate side facing lights: [#LOC]. | 2856 |
| 5550-0191 | Weldon Diamondback V46/V79 LED lower level warning light package. Includes (8) red V46 LED light heads w/clear lenses and (2) red V79 LED light heads w/clear lenses. Locate side facing lights: [#LOC]. | 4070 |
| 5550-0192 | Federal Signal QuadraFlare LED lower level warning light package. Includes (8) QL64XF-R LED light heads with bezels and (2) IMPAXX LED model IPX302-4 light heads. Locate side facing lights: [#LOC]. | 2559 |
| 5550-0193 | Federal Signal QuadraFlare LED lower level warning light package. Includes (6) QL64XF-R LED light heads with bezels and (4) IMPAXX LED model IPX302-4 light heads. Locate side facing lights: [#LOC]. | 2375 |
| 5550-0194 | Federal Signal QuadraFlare LED lower level warning light package. Includes (4) QL64XF-R LED light heads (4) QL64XF-B LED light heads (1) IMPAXX LED model IPX302-3 light head and (1) IMPAXX LED model IPX302-4 light head. Lights to alternate red/blue around unit; see specification. Locate side facing lights: [#LOC]. | 2606 |
| 5550-0197 | Weldon Diamondback LED lower level warning light package. Includes (4) red V46 LED light heads w/clear lenses (4) red V79 LED light heads w/clear lenses and (2) red V26 LED light heads w/clear lenses. Locate side facing lights: [#LOC]. | 4556 |
| 5550-0208 | Federal Signal QuadraFlare LED lower level warning light package. Includes (4) QL64XF-R LED light heads with bezels (chrome) and (8) IMPAXX LED model IPX302-4 light heads with bezels (chrome). Locate side facing lights: [#LOC]. | 2779 |
| 5550-0210 | Federal Signal QuadraFlare LED lower level warning light package. Includes (8) Quadraflare light heads (7) QL64XF-R (red) LED lights and (1) QL64XF-B (blue) LED light with bezels and (2) IMPAXX LED model IPX302-4 light heads. Locate side facing lights: [#LOC]. | 2559 |
| 5550-0211 | Whelen Super LED lower level warning light package with clear lenses. Includes (8) 600 LED light heads (4 red driver's side 4 blue officer's side) and (2) 500 LED light heads (1 red driver's side 1 blue officer's side)w/chrome flanges. Locate side facing lights: [#LOC]. | 3227 |
| 5550-0212 | Whelen 900 series Super LED upper level rear panel warning light package. Includes (2) Whelen 900 Super LED lights with clear lens. (1) red model 90RRF5CR driver's side and (1) blue model 90BBF5CR officer's side. Includes weatherproof connectors. Located upper rear corners. | 1259 |
| 5550-0213 | Whelen Super LED lower level warning light package. Includes (6) red 600 LED light heads (2) red LIN3 lights and (2) red 500 LED light heads w/chrome flanges and clear lenses. Locate side facing lights: [#LOC]. | 3227 |
| 5550-0214 | Whelen Super LED lower level warning light package with clear lens. Includes (7) red 600 LED light heads (1) blue 600 LED light heads and (2) red 500 LED light heads. Locate side facing lights: [#LOC]. | 3227 |

| Item No. | Description | |
|---|---|---|
| 5550-0215 | Whelen 900 series Super LED upper level side warning light package with clear lens. Includes (2) red Whelen 900 Super LED lights. Includes weatherproof connectors. Located (1) on the driver and (1) on the officer side upper rear body panels. | 1259 |
| 5550-0216 | Whelen 900 series Super LED upper level rear panel warning light package with clear lens. Includes (1) red (1) blue Whelen 900 Super LEDs lights. Includes weatherproof connectors. Located (1) red on driver and (1) blue on officer upper rear corners. | 1259 |
| 5550-0220 | Federal Signal QuadraFlare LED lower level warning light package. Includes (6) QL64XF-R LED light heads with bezels and (4) IMPAXX LED model IPX602-R light heads. Locate side facing lights: [#LOC]. | 2855 |
| 5550-0223 | Whelen 900 series Super LED upper level side warning light package. Includes (2) red Whelen 900 Super LED model 90RRF5RR lights. Includes weatherproof connectors. Located (1) on the driver and (1) on the officer side upper forward side corners. | 1259 |
| 5550-0225 | Whelen M6 Super LED lower level warning light package. Includes (8) red M6RC LED light heads with clear lens and (2) red M2RC LED light heads with clear lens. Locate side facing lights: [#LOC]. | 3594 |
| 5550-0227 | Whelen M6/M7/600/IONWR Super LED lower level warning light package. Includes (2) red M6R LED light heads (4) split red/clear M7D light heads (2) 600 Series Super LED light heads Red with clear lenses and (2) red IONWR LED light heads. See specification for location of split lights. Locate side facing lights: [#LOC]. | 4238 |
| 5550-0229 | Federal Signal QuadraFlare LED lower level warning light package. Includes (4) QL64XF-R LED light heads with bezels and (6) IMPAXX LED model IPX302-4 light heads. Locate side facing lights: [#LOC]. | 2375 |
| 5550-0233 | Whelen Super LED lower level warning light package. Includes (6) red 600 LED light heads (2) red LIN3 lights and (2) red 500 LED light heads w/chrome flanges. Locate side facing lights: [#LOC]. | 3227 |
| 5550-0234 | Whelen M6RC Super LED lower level warning light package. Includes (8) red M6RC LED light heads and (2) red 500 Super LED light heads w/chrome flanges and clear lenses. Locate side facing lights: [#LOC]. | 3594 |
| 5550-0236 | Whelen M6 Super LED lower level warning light package. Includes (6) red M6R LED light heads (2) blue M6B LED light heads (1 officer front and 1 officer rear facing) and (2) red M2R LED light heads. Locate side facing lights: [#LOC]. | 3594 |
| 5550-0238 | Federal Signal QuadraFlare LED lower level warning light package. Includes (3) QL64XF-R LED light heads (3) QL64XF-B LED light heads (2) IMPAXX LED model IPX302-3 light head and (2) IMPAXX LED model IPX302-4 light head. Lights to alternate red/blue around unit; see specification. Locate side facing lights: [#LOC]. | 2606 |
| 5550-0240 | Whelen Super LED lower level warning light package. Includes (8) red 600 LED light heads and (2) red 500 LED light heads w/chrome flanges. Locate side facing lights: [#LOC]. | 3227 |
| 5550-0241 | Whelen M6 Super LED lower level warning light package. Includes (6) M6R red LED light heads (2) M9R red LED light heads and (2) red M2R red Super LED light heads. Locate side facing lights: [#LOC]. | 4619 |
| 5550-0242 | Whelen Super LED lower level warning light package. Includes (8) 600 LED light heads (6) Red/Blue (2) Red /White with clear lenses and (2) red 500 LED light heads with clear lenses and chrome flanges. Locate side facing lights: [#LOC]. | 3648 |
| 5550-0244 | (Do not use. Will not meet NFPA requirements)Whelen M6 Super LED lower level warning light package. Includes (8) split red/clear M6D LED light heads and (2) red TIR3 LED light heads. Locate side facing lights: [#LOC]. | 3805 |
| 5550-0245 | Whelen Super LED lower level warning light package. Includes (4) red 600 LED light heads (4) blue 600 LED light heads (1) red 500 LED light head and (1) blue 500 LED light head all with clear lenses. Lights to be driver side blue officer side red; see specification. Locate side facing lights: [#LOC]. | 3227 |
| 5550-0248 | Federal Signal QuadraFlare LED lower level warning light package with clear lenses. Includes (8) QL64XFC-R LED light heads with bezels and (2) IMPAXX LED model IPX300-4 light heads. Locate side facing lights: [#LOC]. | 2559 |
| 5550-0249 | Whelen M6 Super LED lower level warning light package. Includes (5) red M6R LED light heads (2) M6J split red/blue LED light heads (1) blue M6B LED light head (officer front) and (2) red M2R LED light heads. Locate side facing lights: [#LOC]. | 4071 |
| 5550-0250 | Whelen Super LED lower level warning light package. Includes (4) red 600 LED light heads (4) red LIN3 lights and (2) red 500 LED light heads w/chrome flanges. Locate side facing lights: [#LOC]. | 2779 |
| 5550-0251 | Whelen 600 series Super LED lower level warning light package. Includes (10) LED light heads w/chrome flanges. (5) Red (5) blue alternating. Locate side facing lights: [#LOC]. | 3415 |
| 5550-0252 | Whelen 600 series Super LED lower level warning light package. Includes (8) red LED light heads with clear lenses and (2) split red/blue LED light heads with clear lenses. Locate side facing lights: [#LOC]. | 3474 |
| 5550-0254 | Whelen M6 Super LED lower level warning light package. Includes (4) red M6RC LED light heads with clear lenses and chrome flanges (4) split red/clear M6D light heads with clear lenses and chrome flanges and (2) red M2RC LED light heads. See specifications for locations of split lights. Locate side facing lights: [#LOC]. | 4075 |

| Item No. | Description | |
|---|---|---|
| 5550-0255 | Whelen 900 series Super LED upper level rear panel warning light package with clear lens. Includes (2) red Whelen 900 Super LEDs lights model 90RR5FCR. Includes weatherproof connectors. Located Rear of body (1) driver and (1) officer upper rear corners. | 1259 |
| 5550-0256 | Federal Signal QuadraFlare LED upper level rear warning light package. Includes (2) QL97XF (1) blue and (1) red LED light heads with bezels. Located (1) blue on the driver and (1) red on the officer side of upper rear corners. | 994 |
| 5550-0257 | Whelen M6 Super LED lower level warning light package. Includes (10) red/blue M6J LED light heads w/chrome flanges and clear lenses. Locate side facing lights: [#LOC]. | 3997 |
| 5550-0258 | Whelen M6 Super LED lower level warning light package. Includes (4) red M6R LED light heads (4) blue M6B LED light heads (1) red M2R LED light head and (1) blue M2B LED light head. Driver side red officer side blue. Locate side facing lights: [#LOC]. | 3594 |
| 5550-0260 | Federal Signal QuadraFlare LED lower level warning light package. Includes (4) QL64XF-R LED light heads (4) QL64XF-B LED light heads (1) IMPAXX LED model IPX302-3 light head and (1) IMPAXX LED model IPX302-4 light head. Lights to alternate red/blue around unit; see specification. Locate side facing lights: [#LOC]. | 2606 |
| 5550-0261 | Whelen M6 Super LED lower level warning light package. Includes (10) M6RC red LED with clear lens light heads w/chrome flanges. Locate side facing lights: [#LOC]. | 4049 |
| 5550-0262 | Whelen M6 Super LED lower level warning light package. Includes (10) blue M6B LED light heads w/chrome flanges. Locate side facing lights: [#LOC]. | 4049 |
| 5550-0264 | Power Arc LED 4/2/2/2 red/white/blue/yellow lower level warning light package. Includes (4) P14SM (2) M90DHL (1-WR 1-BW) (2)M90FK and (2) LED210. See specifications for exact locations and colors. Locate side facing lights: [#LOC]. | 6466 |
| 5550-0265 | Whelen M6 Super LED lower level warning light package. Includes (4) red M6R LED light heads (4) blue M6B LED light heads (1) red M2R LED light head and (1) blue M2B LED light head. Alternate red/blue around unit. Locate side facing lights: [#LOC]. | 3594 |
| 5550-0266 | Federal Signal QuadraFlare LED lower level warning light package. Includes (6) QL64XF-R LED light heads with bezels (2) QL64SFC-WR and (2) IMPAXX LED model IPX302-4 light heads. Locate side facing lights: [#LOC]. | 3273 |
| 5550-0267 | Whelen Super LED lower level warning light package. Includes (8) red 600 LED light heads and (2) red 500 LED light heads w/chrome flanges. Locate side facing lights: [#LOC]. | 3227 |
| 5550-0269 | Federal Signal QuadraFlare LED lower level warning light package. Includes (5) QL64XF-R LED light heads with bezels (3) QL64XF-B LED light heads with bezels and (2) QL64XF-A LED light heads with bezels. Lights to located as per specificaton. Locate side facing lights: [#LOC]. | 2856 |
| 5550-0270 | Federal Signal Impaxx LED lower level body warning light package. Includes (6) Impaxx LED light heads with bezels located (1) each side below the forward body compartment (offset forward) (1) each side below the rearward body compartments (offset rearward) and (1) each side on rear of body down low below the taillights (offset outboard). | 718 |
| 5550-0271 | Whelen Super LED lower level body warning light package. Includes (6) LIN3 light heads located (1) each side below the forward body compartment (offset forward) (1) each side below the rearward body compartments (offset rearward) and (1) each side on rear of body down low below the taillights (offset outboard). | 628 |
| 5550-0274 | Federal Signal QuadraFlare LED lower level warning light package. Includes (7) QL64XF-R LED light heads (1) QL64XF-G light head and (2) IMPAXX LED model IPX302-4 light heads. Locate side facing lights: [#LOC]. | 2862 |
| 5550-0275 | Whelen M6 Super LED lower level warning light package. Includes (6) red M6R LED light heads and (4) red M2R LED light heads. Locate side facing lights: [#LOC]. | 3423 |
| 5550-0276 | Code3 LED 6/2/2 lower level warning light package. Includes (8) model 65 red LED and (2) LXEX1F red LED lights all with clear lenses. Includes chrome bezels where applicable. Locate side facing lights: [#LOC]. | 3596 |
| 5550-0277 | Federal Signal QuadraFlare LED lower level warning light package with clear lenses. Includes (8) QL64XFC-R red LED light heads with bezels and (2) IMPAXX LED model IPX600-B blue light heads. Locate side facing lights: [#LOC]. | 2629 |
| 5550-0278 | Federal Signal QuadraFlare LED lower level warning light package. Includes (7) QL64XF-R LED (1) QL64XF-B LED light head with bezel (driver rear facing) and (2) IMPAXX LED model IPX302-4 light heads. Locate side facing lights: at forward most position centered in rear wheel well and side facing at rear of body in rubrail if equipped. | 2559 |
| 5550-0279 | Federal Signal QuadraFlare LED lower level warning light package. Includes (6) QL64XF-R LED light heads with bezels and (4) IMPAXX LED model IPX302-4 light heads. Locate side facing lights: [#LOC]. | 2375 |
| 5550-0280 | Federal Signal QuadraFlare LED lower level warning light package. Includes (8) QL64XF-B LED light heads with bezels and (2) IMPAXX LED model IPX302-3 light heads. Locate side facing lights: [#LOC]. | 2559 |
| 5550-0281 | Whelen M6 Super LED lower level warning light package. Includes (6) red M6R LED light heads (2) red 600 LED light heads and (2) red TIR3 LED light heads. Locate side facing lights: [#LOC]. | 3434 |

| Item No. | Description | |
|---|---|---|
| 5550-0282 | Whelen M6 Super LED lower level warning light package. Includes (8) red M6R and (2) blue M6B LED light heads w/chrome flanges. See specifications for color locations. Locate side facing lights: [#LOC]. | 4049 |
| 5550-0283 | Code3 LED 8/2 red/blue lower level warning light package. Includes (8) model 65 LED and (2) LXEX1F LED lights. See specification for exact locations. Includes chrome bezels where applicable. Locate side facing lights: [#LOC]. | 3596 |
| 5550-0285 | Whelen M6 Super LED lower level warning light package. Includes (7) red M6R LED light heads (1) green M6G and (2) red M2R LED light heads. Locate side facing lights: [#LOC]. | 3651 |
| 5550-0286 | Federal Signal QuadraFlare LED lower level warning light package with clear lenses. Includes (6) QL64SFC-RR LED light heads with bezels (2) QL64SFC-WR and (2) IMPAXX LED model IPX300-4 light heads. See specification for exact locations. Locate side facing lights: [#LOC]. | 3394 |
| 5550-0287 | Whelen Super LED lower level warning light package. Includes (6) red M6R LED light heads (2) red 600 LED light heads and (2) red M2R LED light heads. Locate side facing lights: [#LOC]. | 3594 |
| 5550-0288 | Whelen Super LED lower level warning light package. Includes (6) 600 LED light heads; (3) red/(3) blue (2) 900 LED light heads; (1) red/(1) blue and (2) 500 LED light heads; (1) red/(1) blue w/chrome flanges. See specifications for exact locations of lights. Locate side facing lights: [#LOC]. | 3392 |
| 5550-0289 | Whelen M6/M7/M2/M9 Super LED lower level warning light package with clear lenses. Includes (2) red M6RC LED light heads (4) red M7RC light heads (2) red M2RC LED light heads and (2) red M9RC LED light heads. See specification for exact locations lights. Locate side facing lights: [#LOC]. | 4202 |
| 5550-0290 | Whelen M6 Super LED lower level warning light package. Includes (6) red M6RC LED light heads (2) split red/amber M6K light heads and (2) red M2RC LED light heads. Locate side facing lights: [#LOC]. | 3969 |
| 5550-0291 | Whelen Super LED lower level warning light package. Includes (6) red M6RC LED light heads with clear lenses (2) red 600 LED light heads with clear lenses and (2) red M2RC LED light heads with clear lenses. Locate side facing lights: [#LOC]. | 3594 |
| 5550-0292 | Whelen M6 Super LED lower level warning light package. Includes (8) red M6RC LED light heads with clear lens and (2) red TIR3 LED light heads. Locate side facing lights: [#LOC]. | 3505 |
| 5550-0293 | Whelen Super LED lower level warning light package with clear lenses. Includes (8) red 600 LED light heads and (2) red TIR3 LED light heads grommet mounted. Locate side facing lights: [#LOC]. | 3073 |
| 5550-0295 | Whelen M6 Super LED lower level warning light package. Includes (6) red M6RC LED light heads (2) red 6RBRC Rota-Beam LED and (2) red M2RC LED light heads with clear lenses. Locate side facing lights: [#LOC]. | 4249 |
| 5550-0297 | Whelen M series Super LED lower level warning light package. Includes (4) M6R red LED light heads (4) M9 (2 red 2 amber) LED light heads and (2) red M2R red Super LED light heads. Locate side facing lights: [#LOC]. | 4577 |
| 5550-0298 | Whelen M6 Super LED lower level warning light package. Includes (6) M6RC red LED light heads (2) M9 (1 red 1 blue) LED light heads w/clear lenses and (2) red M2RC red Super LED light heads. Locate side facing lights: [#LOC]. | 4619 |
| 5550-0299 | Whelen M6 Super LED lower level warning light package. Includes (7) red M6R and (3) blue M6B LED light heads w/chrome flanges. See specifications for color locations. Locate side facing lights: [#LOC]. | 4049 |
| 5550-0300 | Federal Signal QuadraFlare LED lower level warning light package. Includes (4) QL64XF-R LED light heads with bezels and (6) IMPAXX LED model IPX302-4 light heads with bezels. Locate side facing lights: [#LOC]. | 2375 |
| 5550-0301 | Whelen LED lower level warning light package with clear lenses. Includes (4) 600 Super LED red light heads with bezels and (6) LIN3 LED red light heads with bezels. Locate side facing lights: [#LOC]. | 2647 |
| 5550-0302 | Federal Signal QuadraFlare LED lower level cab warning light package. Includes (4) QL64XF-R LED light heads with bezels. | 1222 |
| 5550-0303 | Whelen LED lower level cab warning light package with clear lenses. Includes (4) 600 Super LED red light heads with bezels. | 1439 |
| 5550-0304 | Whelen M6 Super LED lower level warning light package. Includes (8) red M6R LED light heads and (2) red PSR00FRR Super LED light heads w/chrome flanges. Locate side facing lights: [#LOC]. | 3594 |
| 5550-0305 | Federal Signal QuadraFlare LED lower level warning light package. Includes (6) QL64XF-R LED light heads with bezels (2) QL64SFC-WR and (2) IMPAXX LED model IPX302-4 light heads. Locate side facing lights: [#LOC]. | 3273 |
| 5550-0306 | Whelen Super LED lower level warning light package. Includes (8) red 600 LED light heads and (2) red 500 LED light heads w/black flanges. Locate side facing lights: [#LOC]. | 3227 |
| 5550-0307 | Whelen M6 Super LED lower level warning light package. Includes (8) red M6RC LED light heads with clear lens and (and (2) red TIR3 LED light heads grommet mounted with clear lenses. Locate side facing lights: [#LOC]. | 3594 |
| 5550-0310 | Whelen M6 Super LED lower level warning light package. Includes (6) M6RC red LED light heads (2) M9RC red LED light heads (rear facing) and (2) red M2RC red Super LED light heads. Locate side facing lights: [#LOC]. | 4619 |

| Item No. | Description | |
|---|---|---|
| 5550-0311 | Whelen M6 Super LED lower level warning light package with clear lenses. Includes (7) red M6RC LED light heads (1) blue M6BC light head and (2) blue M2BC LED light heads. Locate side facing lights: [#LOC]. | 3594 |
| 5550-0312 | Whelen M6 Super LED lower level warning light package. Includes (4) M6RC red LED light heads (2) M9RC red LED light heads and (4) red M2RC red Super LED light heads. Locate side facing lights: [#LOC]. | 4550 |
| 5550-0313 | Whelen Super LED lower level warning light package with clear lenses. Includes (8) 600 LED light heads (1 red 7 blue) and (2) blue 500 LED light heads w/chrome flanges. Locate side facing lights: [#LOC]. | 3227 |
| 5550-0314 | Whelen Super LED lower level warning light package with clear lens. Includes (5) red 600 LED light heads (3) blue 600 LED light heads and (2) red 500 LED light heads. Locate side facing lights: [#LOC]. | 3227 |
| 5550-0315 | Power Arc LED 4/4/2 lower level warning light package. Includes 210LED-1B frt dr side 210LED-2R frt off side 210LED-2R rr dr side 210LED-1B rr off side and (4) P14SM; (2) red (2) blue. Locate side facing lights: [#LOC]. | 4826 |
| 5550-0316 | Whelen M6 Super LED lower level warning light package. Includes (8) red M6RC LED light heads with clear lens and (2) red PSR00FRR LED light heads. Locate side facing lights: [#LOC]. | 3594 |
| 5550-0317 | Whelen M6 Super LED lower level warning light package with clear lenses. Includes (4) M6V2 (2 red 2 blue) LED light heads (4) M6 (2 red 2 blue) LED light heads and (2) TIR3 (1 red 1 blue) LED light heads. See specifications for exact locations. Locate side facing lights: [#LOC]. | 5374 |
| 5550-0318 | Whelen Super LED lower level warning light package. Includes (6) red 600 LED light heads (2) red M6V2R LED light heads and (2) red 500 LED light heads w/chrome flanges. Locate side facing lights: [#LOC]. | 4264 |
| 5550-0319 | Whelen Super LED lower level warning light package with clear lenses. Includes (4) 600 LED light heads (2-red 2-blue) (4) 600 split LED light heads (2-red/clear 2-red/blue) and (2) 500 split red/blue TIR6 LED light heads w/chrome flanges. Locate side facing lights: [#LOC]. | 4334 |
| 5550-0321 | Federal Signal QuadraFlare LED lower level warning light package. Includes (2) QL64XF-R red LED light heads (4) QL64SFC-RC split red/clear LED light heads (2) QL64XF-B LED (rear facing) light heads and (2) IMPAXX LED model IPX302-4 light heads. Locate side facing lights: [#LOC]. | 2959 |
| 5550-0322 | Power Arc LED 4/2/2/2 red/white/blue/yellow lower level warning light package. Includes (2)P14SM (2)M90DHL(1-WR 1-BW) (2)M90FK (2)LED210 and (2)PP2-R. See specifications for exact locations and colors. Locate side facing lights: [#LOC]. | 6466 |
| 5550-0324 | Whelen 600 series Super LED lower level warning light package. Includes (5) driver red LED light heads w/chrome flanges and (5) officer blue LED light heads w/chrome flanges. Locate side facing lights: [#LOC]. | 3415 |
| 5550-0325 | Whelen M6 Super LED lower level warning light package. Includes (4) red M6R LED light heads (4) red 6RBR Rota-Beam LED and (2) red 5V1R LED light heads. Locate side facing lights: [#LOC]. | 4913 |
| 5550-0326 | Whelen M6 Super LED lower level warning light package. Includes (6) red M6R LED light heads (2) split red/clear M6D LED light heads and (2) red TIR3 LED light heads. Locate side facing lights: [#LOC]. | 3485 |
| 5550-0328 | Whelen M6 Super LED lower level warning light package with clear lenses. Includes (6) red M6RC LED light heads (2) blue M6BC LED light heads (1 officer front and 1 officer rear facing) and (2) red TIR3 LED light heads. Locate side facing lights: [#LOC]. | 3594 |
| 5550-0329 | Whelen Super LED lower level warning light package. Includes (6) red M6R LED light heads (2) blue M6B LED light heads and (2) red TIR6 series Super LED light heads w/chrome flanges. Locate side facing lights: [#LOC]. | 4049 |
| 5550-0331 | Whelen Super LED lower level warning light package with clear lenses. Includes (8) red 600 LED light heads and (2) WIOND split red/clear LED light heads grommet mounted. Locate side facing lights: [#LOC]. | 3185 |
| 5550-0332 | Federal Signal QuadraFlare LED lower level warning light package. Includes (7) QL64XF-R (red) LED lights and (1) QL64XF-B (blue) LED light with bezels and (2) IMPAXX LED model IPX302-4 light heads. Locate side facing lights: [#LOC]. | 2559 |
| 5550-0334 | Whelen Super LED 4/2/2/2 lower level warning light package with clear lenses. Includes (4) M6RC red (2) M9D split red/clear (2) M7RC red and (2) M2RC red LED light heads w/weatherproof connectors. See specification for exact light locations. Locate side facing lights: [#LOC]. | 4059 |
| 5550-0335 | Whelen M6 Super LED lower level warning light package. Includes (4) red M6RC LED light heads (2) split red/clear M6D light heads (2) red 6RBRC Rota-Beam LED and (2) red M2RC LED light heads with clear lenses. Locate side facing lights: [#LOC]. | 4301 |
| 5550-0336 | Whelen M6 Super LED lower level warning light package with clear lenses. Includes (7) red M6RC LED light heads (1) green M6GC and (2) red M2R CLED light heads. Locate side facing lights: [#LOC]. | 3651 |
| 5550-0337 | Federal Signal QuadraFlare LED lower level warning light package with clear lenses. Includes (7) QL64SFC-RR LED light heads with bezels (1) QL64SFC-GR and (2) Viper EXT LED model VPX800-4 light heads. See specification for exact locations. Locate side facing lights: [#LOC]. | 3394 |

| Item No. | Description | |
|---|---|---|
| 5550-0339 | Whelen M6 Super LED lower level warning light package. Includes (6) M6RC red LED light heads (2) M9RC red LED light heads (side facing) and (2) red M2RC red Super LED light heads. Locate side facing lights: [#LOC]. | 4619 |
| 5550-0340 | Whelen Super LED lower level warning light package with clear lenses. Includes (4) red 600 LED light heads (4) blue 600 LED light heads (1) red 500 LED light head and (1) blue 500 LED light head. LIghts to alternate red/blue around unit; see specification. Locate side facing lights: [#LOC]. | 3227 |
| 5550-0341 | Whelen M6 Super LED lower level warning light package with clear lenses. Includes (4) red M6V2RC LED light heads (4) red M6RC LED light heads and (2) red M2RC LED light heads. Locate side facing lights: [#LOC]. | 5578 |
| 5550-0342 | Federal Signal QuadraFlare LED lower level warning light package. Includes (4) QL64XF-R LED light heads (4) QL64XF-B LED light heads (1) IMPAXX LED model IPX302-3 light head and (1) IMPAXX LED model IPX302-4 light head. Driver red officer blue. Locate side facing lights: [#LOC]. | 2606 |
| 5550-0343 | Federal Signal QuadraFlare LED lower level warning light package with clear lenses. Includes (8) QL64XFC-R LED light heads with bezels and (2) IMPAXX LED model IPX300-4 light heads. Locate side facing lights: [#LOC]. | 2559 |
| 5550-0344 | Whelen M6 Super LED lower level warning light package. Includes (6) red M6R LED light heads and (4) red 6RBR Rota-Beam LED light heads. Locate side facing lights: [#LOC]. | 4649 |
| 5550-0345 | Federal Signal QuadraFlare LED lower level warning light package. Includes (6) QL64XF-R LED light heads with bezels and (4) IMPAXX LED model IPX602-R light heads. Locate side facing lights: [#LOC]. | 2855 |
| 5550-0346 | Whelen 600 Super LED lower level warning light package. Includes (6) red 600 LED light heads (2) red 6RBR Rota-Beam LED and (2) red 500 LED light heads. Locate side facing lights: [#LOC]. | 3926 |
| 5550-0348 | Federal Signal QuadraFlare LED lower level warning light package. Includes (4) QL64XFC-R LED light heads with bezels (2) QL64SFC-RC LED light heads with bezels and (4) IMPAXX LED model IPX300-4 light heads. See specification for detail of lighting locations. Locate side facing lights: [#LOC]. | 2762 |
| 5550-0349 | Whelen M6 Super LED lower level warning light package with clear lenses. Includes (2) red M6V2RC LED light heads (4) red M6RC LED light heads (2) split red/clear M6D LED light heads and (2) red M2RC LED light heads. Locate side facing lights: [#LOC]. | 4738 |
| 5550-0350 | Whelen M6 Super LED lower level warning light package. Includes (4) red M6RC LED light heads with clear lenses and chrome flanges (2) split red/clear M6D light heads with clear lenses (2) split red/clear M7D light heads with clear lense and chrome flanges and (2) red M2RC LED light heads. See specifications for locations of split lights. Locate side facing lights: [#LOC]. | 4075 |
| 5550-0351 | Whelen M6 Super LED lower level warning light package with clear lenses. Includes (2) red M6V2RC LED light heads (4) red M6RC LED light heads (2) split red/clear M6D LED light heads and (2) red M2RC LED light heads. Locate side facing lights: [#LOC]. | 4738 |
| 5550-0352 | Whelen Super LED lower level warning light package with clear lenses. Includes (8) 600 LED light heads (6 red2 blue; (1) forward and (1) rearward facing driver side) and (2) blue 500 LED light heads w/chrome flanges. Locate side facing lights: [#LOC]. | 3227 |
| 5550-0353 | Whelen M6 Super LED lower level warning light package. Includes (6) M6RC LED light heads (2) M6V2RC LED light heads and (2) TIR3 LED light heads w/chrome flanges. Locate side facing lights: [#LOC]. | 4502 |
| 5550-0354 | Whelen M Series Super LED lower level warning light package. Includes (8) red M6RC LED light heads and (2) red M2RC LED light heads with clear lenses. Locate side facing lights: [#LOC]. | 3594 |
| 5550-0355 | Federal Signal Impaxx LED lower level warning light package. Includes (10) Impaxx LED light heads with bezels located (1) each side of hood area (1) each side forward facing mounted in grill area (1) each side below the forward body compartment (offset rearward) (1) each side below the rearward body compartments (offset rearward) and (1) each side on rear of body down low below the taillights (offset outboard). | 2105 |
| 5550-0357 | Code3 Prizm II model 468R red LED lower level warning light package with chrome bezels (as applicable). Includes (10) LED lights. Locate side facing lights: [#LOC]. | 3313 |
| 5550-0358 | Code3 Prizm II model 468CR red LED lower level warning light package with chrome bezels (as applicable) and clear lenses. Includes (10) LED lights. Locate side facing lights: [#LOC]. | 3313 |
| 5550-0359 | Code3 Prizm II 8/2 red LED lower level warning light package. Includes (8) model 468R red LED and (2) model LXEX1F-R red LED. Locate side facing lights: [#LOC]. | 3249 |
| 5550-0360 | Code3 Prizm II 8/2 red LED lower level warning light package with clear lenses. Includes (8) model 468CR red LED and (2) model LXEX1F-R red LED. Locate side facing lights: [#LOC]. | 3249 |
| 5550-0363 | Whelen Super LED lower level warning light package with clear lenses. Includes (4) red 600 LED light heads (4) blue 600 LED light heads (1) red 500 LED light head and (1) blue 500 LED light head. LIghts to alternate red/blue around unit; see specification. Locate side facing lights: [#LOC]. | 3227 |
| 5550-0364 | Whelen 600 series Super LED lower level warning light package with clear lenses. Includes (5) red LED light heads w/chrome flanges and (5) blue LED light heads w/chrome flanges. LIghts to alternate red/blue around unit; see specification. Locate side facing lights: [#LOC]. | 3415 |

| Item No. | Description | |
|---|---|---|
| 5550-0365 | Federal Signal QuadraFlare LED lower level warning light package with clear lenses. Includes (6) QL64XFC-R LED light heads with bezels and (4) IMPAXX LED model IPX300-4 light heads. Locate side facing lights: [#LOC]. | 2375 |
| 5550-0366 | Federal Signal QuadraFlare LED lower level warning light package with clear lenses. Includes (4) QL64XFC-R LED light heads (4) QL64XFC-B LED light heads (1) IMPAXX LED model IPX300-3 light head and (1) IMPAXX LED model IPX300-4 light head. Lights to alternate red/blue around unit; see specification. Locate side facing lights: [#LOC]. | 2606 |
| 5550-0369 | Whelen Super LED lower level warning light package. Includes (8) 600 LED light heads (6 red2 blue rear facing) and (2) red 500 LED light heads w/chrome flanges. Locate side facing lights: [#LOC]. | 3227 |
| 5550-0370 | Whelen M6 Super LED lower level warning light package. Includes (6) red M6RC LED light heads with clear lenses and chrome flanges (2) split red/clear M6D light heads with clear lenses and chrome flanges and (2) M2RC red light heads with clear lenses. See specifications for location of split lights. Locate side facing lights: [#LOC]. | 3938 |
| 5550-0371 | Whelen M6 Super LED lower level warning light package. Includes (6) red M6RC LED light heads with clear lenses and chrome flanges (2) split red/clear M6D light heads with clear lenses and chrome flanges and (2) WIONR red light heads with clear lenses. See specifications for location of split lights. Locate side facing lights: [#LOC]. | 3938 |
| 5550-0372 | Whelen Super LED lower level warning light package. Includes (8) 600 LED light heads (7 red1 blue rear facing driver side) and (2) red 500 LED light heads w/chrome flanges. Locate side facing lights: [#LOC]. | 3227 |
| 5550-0373 | Federal Signal QuadraFlare LED lower level warning light package with clear lenses. Includes (8) QL64XFC-R LED light heads with bezels and (2) IMPAXX LED model IPX300-4 light heads. Locate side facing lights: [#LOC]. | 2559 |
| 5550-0375 | Whelen M6 Super LED lower level warning light package. Includes (8) red M6RC LED light heads with clear lens and (2) red WIONR LED light heads. Locate side facing lights: [#LOC]. | 3794 |
| 5550-0377 | Whelen 600 series Super LED lower level warning light package with clear lenses. Includes (9) red LED light heads w/chrome flanges and (1) blue LED light head w/chrome flange. Locate side facing lights: [#LOC]l. | 3415 |
| 5550-0378 | Whelen M6 Super LED lower level warning light package with clear lenses. Includes (6) red M6RC LED light heads (2) split red/clear M6D LED light heads and (2) red TIR3 LED light heads. Locate side facing lights: [#LOC]. | 3485 |
| 5550-0379 | Whelen Super LED lower level warning light package with clear lenses. Includes (6) red/clear M6 split LED light heads (2) red M6 LED light heads and (2) split red/clear Micron LED light heads w/chrome flanges. Locate side facing lights: [#LOC]. | 4433 |
| 5550-0380 | Whelen M series Super LED lower level warning light package. Includes (4) red 600 Super LED light heads (4) red M6V2R LED light heads and (2) red M2R LED light heads. Locate side facing lights: [#LOC]. | 5245 |
| 5550-0381 | Whelen M6 Super LED lower level warning light package. Includes (4) red M6V2R LED light heads (4) red M6R LED light heads and (2) red M2R LED light heads. Locate side facing lights: [#LOC]. | 5578 |
| 5550-0382 | Whelen M6 Super LED lower level warning light package. Includes (6) red M6RC LED light heads with clear lenses (2) red 600 LED light heads with clear lenses and (2) WIOND split red/clear light heads with clear lenses grommet mounted. Locate side facing lights: [#LOC]. | 3938 |
| 5550-0383 | Whelen M6 Super LED lower level warning light package. Includes (4) red M6V2R LED light heads (4) red M6R LED light heads and (2) red M2R LED light heads. Locate side facing lights: [#LOC]. | 5578 |
| 5550-0384 | Whelen M6 Super LED lower level warning light package. Includes (4) red M6V2R LED light heads (4) red M6R LED light heads and (2) red 5V1R LED light heads. Locate side facing lights: [#LOC]. | 5881 |
| 5550-0385 | Federal Signal QuadraFlare LED lower level warning light package. Includes (6) QL64XF-R LED light heads with bezels (2) QL97XF-R and (2) IMPAXX LED model IPX302-4 light heads. Locate side facing lights: [#LOC]. | 3273 |
| 5550-0386 | Whelen M6 Super LED lower level warning light package. Includes (2) red M6V2R LED light heads (4) split red/clear M6D LED light heads with clear lenses (2) red M6R LED light heads and (2) red M2R LED light heads. See specifications for exact locations. Locate side facing lights: [#LOC]. | 4803 |
| 5550-0387 | Whelen Super LED lower level warning light package. Includes (4) red 600 LED light heads (4) red 6RBR Rota-Beam LED and (2) red TIR6 LED light heads. Locate side facing lights: [#LOC]. | 4426 |
| 5550-0388 | Whelen M6 Super LED lower level warning light package. Includes (6) red M6V2R LED light heads and (4) red M6R LED light heads. Locate side facing lights: [#LOC]. | 6686 |
| 5550-0389 | Whelen M6 Super LED lower level warning light package. Includes (2) red M6V2R LED light heads (6) red M6R LED light heads and (2) red M2R LED light heads. Locate side facing lights: [#LOC]. | 4502 |
| 5550-0390 | Federal Signal QuadraFlare LED lower level warning light package. Includes (8) QL64XF-R LED light heads with bezels and (2) Micro Pulse model MPS1200U-RR LED light heads. Locate side facing lights: [#LOC]. | 2658 |
| 5550-0391 | Whelen M6 Super LED lower level warning light package. Includes (5) red M6R LED light heads (3) blue M6B light heads and (2) red M2R LED light heads. See specifications for exact locations. Locate side facing lights: [#LOC]. | 3594 |

| Item No. | Description | |
|---|---|---|
| 5550-0394 | Whelen M6 Super LED lower level warning light package. Includes (8) red M6RC LED light heads and (2) red 6RBRC Rota-Beam LED with clear lenses. Locate side facing lights: [#LOC]. | 4302 |
| 5550-0395 | Whelen M6 Super LED lower level warning light package. Includes (4) split red/blue M6J LED light heads (2) red M6RC LED light heads (2) blue M6BC LED light head and (2) red M2RC LED light heads with clear lenses. See specifications for exact locations of lighting. Locate side facing lights: [#LOC]. | 4139 |
| 5550-0396 | Whelen M6 Super LED lower level warning light package. Includes (7) red M6R LED light heads (1) blue M6B light head and (2) blue M2B LED light heads. Locate side facing lights: [#LOC]. | 3594 |
| 5550-0397 | Power Arc LED 4/2/2 red/white/blue lower level warning light package with clear lenses. Includes (2) MP13-BW (2) M90DHL (1-WR 1-BW) and (4) M90 (3 red 1 blue). See specifications for exact locations and colors. Locate side facing lights: at forward most position and centered in rear wheel well. | 5478 |
| 5550-0398 | Federal Signal QuadraFlare LED lower level warning light package. Includes (8) QL64XF-R LED light heads (1) QL64XF-B LED light head and (1) QL64XF-A LED light head with bezels. Locate side facing lights: [#LOC]. | 2856 |
| 5550-0399 | Whelen M6 Super LED lower level warning light package with clear lenses. Includes (6) red M6V2RC LED light heads (2) red M6RC LED light heads and (2) red M2RC LED light heads. Locate side facing lights: [#LOC]. | 6111 |
| 5550-0400 | Whelen Super LED lower level warning light package with clear lenses. Includes (8) red/blue 600 split LED light heads and (2) red/blue 500 split LED light heads w/chrome flanges. Locate side facing lights: [#LOC]. | 4057 |
| 5600-0002 | Warning light Whelen 600 series strobe (PR) [#COL]. Requires power pack or option with spare power pack outlets. Includes weatherproof connectors. Requires engineering approval for NFPA applications. Location(s): [#LOC] | 509 |
| 5600-0005 | Warning light Whelen 700 series strobe (PR) [#COL]. Requires power pack or option with spare power pack outlets. Includes weatherproof connectors. Requires engineering approval for NFPA applications. Location(s): [#LOC] | 503 |
| 5600-0008 | Warning light Whelen 900 series strobe (PR) [#COL]. Requires power pack or option with spare power pack outlets. Includes weatherproof connectors. Requires engineering approval for NFPA applications. Location(s): [#LOC] | 509 |
| 5600-0011 | Whelen power supply model UPS64LX 4Place 75Watt strobe. | 656 |
| 5600-0012 | Whelen power supply model ISP148 eight (8) place 140watt strobe. | 1537 |
| 5600-0013 | Whelen power supply model ISP188 eight (8) place 180watt strobe. | 1644 |
| 5600-0016 | Warning light Whelen 500 series LED (PR) amber. Location: [#LOC] Surface mounted with weatherproof connector. Requires engineering approval for NFPA applications. | 499 |
| 5600-0017 | Warning light Whelen 500 series LED (PR) red. Surface mounted with weatherproof connector. Location: [#LOC] | 499 |
| 5600-0018 | Warning light Whelen 500 series LED (PR) blue. Location: [#LOC] Surface mounted with weatherproof connector. Requires engineering approval for NFPA applications. | 858 |
| 5600-0020 | Warning light Whelen 600 series LED (PR) amber. Location: [#LOC] Surface mounted with weatherproof connector. Requires engineering approval for NFPA applications. | 888 |
| 5600-0021 | Warning light Whelen 600 series LED (PR) red. Surface mounted with weatherproof connector. Location: [#LOC] | 888 |
| 5600-0022 | Warning light Whelen 700 series LED (PR) red. Surface mounted with weatherproof connector. Location: [#LOC] | 777 |
| 5600-0023 | Warning light Whelen 900 series LED (PR) amber. Location: [#LOC] Surface mounted with weatherproof connector. Requires engineering approval for NFPA applications. | 1607 |
| 5600-0024 | Warning light Whelen 900 series LED (PR) red. Surface mounted with weatherproof connector. Location: [#LOC] | 1607 |
| 5600-0025 | Warning light Whelen 600 series halogen (PR) [#COL]. Includes weatherproof connectors. Requires engineering approval for NFPA applications. Location(s): [#LOC] | 412 |
| 5600-0029 | Code3 Model 550 rotating (PR) with [#COL] domes. Location: [#LOC]. | 440 |
| 5600-0030 | Code3 Model #550/#41. Includes (2) #550's with red domes and (2) #41 lights with [#COL] lenses. Total four (4) lights at rear upper. Location of Model 550 lights: [#LOC]. | 1132 |
| 5600-0031 | Code 3 / PSE Oscilaser warning light (PR). Lights are to be located on front of cab in the inboard position of the quad bezel. | 683 |
| 5600-0033 | Whelen beacon with halogen rotator and 700 series strobe (PR) Model B6R with red domes and [#COL] strobes. Location [#LOC]. Requires power pack. | 972 |
| 5600-0034 | Federal model SY12FS Sentry (PR) with [#COL] domes. Location: [#LOC]. | 441 |
| 5600-0036 | Federal model IVP100 Vector pod (PR) with [#COL] domes. Location: [#LOC]. | 525 |
| 5600-0038 | Federal Model IVP200F Vector pod warning light (PR) with [#COL] filters. Location: [#LOC]. | 571 |
| 5600-0041 | Warning light Federal Signal GS2 strobe (PR) [#COL]. Requires power pack or option w/spare power pack outlets. Requires engineering approval for NFPA applications. Location(s): [#LOC]. | 490 |
| 5600-0046 | Warning light Federal Signal GH1F halogen (PR) [#COL]. Location(s): [#LOC] | 369 |
| 5600-0048 | Warning light Federal Signal GL5 LED (PR) red. Location: [#LOC] | 727 |

| Item No. | Description | |
|---|---|---|
| 5600-0049 | Warning light Federal Signal GS5 strobe (PR) [#COL]. Requires power pack or option w/spare power pack outlets. Requires engineering approval for NFPA applications. Location(s): [#LOC] | 448 |
| 5600-0051 | Warning light Federal Signal GL5 LED (PR) amber. Location: [#LOC]. | 750 |
| 5600-0052 | Federal Signal SPS4-NFPA (4) place 90 watt strobe power supply. Required when using Federal Signal strobes. | 651 |
| 5600-0053 | Federal Signal SPS8-NFPA (8) place 192 watt strobe power supply. Required when using Federal Signal strobes. | 1158 |
| 5600-0061 | Mars 888 pedestal mounted traffic clearing light on front of cab centered below windshield. Lens color: clear. | 1076 |
| 5600-0062 | Warning light Roto Ray 200 with red lenses. N/A on commercial chassis. Locate on front of cab centered below windshield. | 1859 |
| 5600-0063 | Warning light Roto Ray 200 with (2) red and (1) clear lenses. N/A on commercial chassis. Locate on front of cab centered below windshield. | 1859 |
| 5600-0067 | Federal Signal Model #100 beacon (PR) with [#COL] domes. Location: [#LOC]. | 562 |
| 5600-0074 | Opticom Emitter 3M #792H. Emitter and control only. Wire through parking brake. Location: [#LOC]. | 3439 |
| 5600-0075 | Opticom Emitter 3M #592 Chrome. Emitter and dash control only. Wire through parking brake. Location: [#LOC]. | 4086 |
| 5600-0078 | Whelen Super LED beacon (PR) model L31H with [#COL] domes. Location [#LOC]. | 2124 |
| 5600-0079 | Whelen beacon with halogen rotator and 700 series LED (PR) Model B6TM with red domes and [#COL] LEDs. Location [#LOC]. | 1609 |
| 5600-0080 | Whelen beacon with LED upper beacon and 700 series Super LED (PR) model B6LED with red domes and [#COL] LEDs. Location: [#LOC]. | 3254 |
| 5600-0081 | Code 3 / PSE Oscilaser warning light clear (PR). Lights are to be located on front of cab above quad bezels. | 715 |
| 5600-0083 | Warning light Code3 LXEX1F-R LED (PR). Surfaced mounted with clear lens. Location: [#LOC] | 810 |
| 5600-0085 | Tomar strobe preemption emitter with chrome housing. Includes pedestal mount and switch accessible to driver. Wire through parking brake. Location: [#LOC]. | 1679 |
| 5600-0086 | Whelen beacon model RB6T (PR) with [#COL] domes. Location: [#LOC]. | 457 |
| 5600-0087 | Warning light Code 3 65BZA LED (PR) amber. Surface mounted with bezel. Location: [#LOC] | 654 |
| 5600-0088 | Warning light Code 3 65BZR LED (PR) Red. Surface mounted with bezel. Location: [#LOC] | 654 |
| 5600-0089 | Warning Light Code3 model #65BZRW split red/clear LED with chrome bezel (PR). Location: [#LOC]. | 858 |
| 5600-0090 | Warning light Federal Signal QuadraFlare QL64XF LED (PR) red. Surface mounted with bezel. Location: [#LOC]. | 691 |
| 5600-0092 | Opticom Emitter 3M #792HF. Emitter with filter and control only. Wire through parking brake. Location: [#LOC]. | 3439 |
| 5600-0093 | Whelen beacon with halogen rotator and 700 series scene (PR) Model B6TH*Z1P. Dome color: [#COL]. Location [#LOC]. | 1357 |
| 5600-0094 | Warning light Federal Signal QL64XF LED (PR) amber. Surface mounted with bezel. Location: [#LOC]. | 691 |
| 5600-0098 | Warning light Whelen 600 series Super LED (PR) amber. Location: [#LOC]. | 688 |
| 5600-0099 | Warning light Whelen 600 series Super LED (PR) red. Location: [#LOC]. | 688 |
| 5600-0100 | Warning light Whelen 600 series Super LED (PR) blue with clear lens. Location: [#LOC]. | 688 |
| 5600-0101 | Whelen beacon with halogen rotator and 700 series LED (PR) Model B6TM with amber dome on driver side red dome officer side and [#COL] LEDs. Location [#LOC]. | 1609 |
| 5600-0105 | Hazard (door ajar) light 2" LED. Location: [#LOC]. | 41 |
| 5600-0106 | Warning light Roto Ray LED with (2) red and (1) clear lights. Locate on front of cab centered below windshield. | 3156 |
| 5600-0108 | Light Code 3 model 2118-NFPA-2 (PR). Located one each side on rear upper of body. | 2078 |
| 5600-0109 | Warning light Whelen 500 series LED (4) red. Surface mounted with weatherproof connector. Flashing lights wired through door ajar. Location: One on each of the interior cab doors (outboard position). | 993 |
| 5600-0111 | Warning light Whelen 600 series Super LED (PR) white with clear lens. Location: [#LOC]. | 778 |
| 5600-0112 | Warning light Whelen 600 series LED (PR) blue. Surface mounted. Location: [#LOC] | 1021 |
| 5600-0113 | Code 3 Optix 3 LED lights. Locate (1) each side at rear mounted to upper rear warning light brackets. Lights to be amber and switched with the upper rear warning lights. | 720 |
| 5600-0114 | Tomar RECT-79S (4) two red two blue and one 780-1228-WP power supply. Includes RECT-79-SMFP chrome bezels. Lights to be located one each side at rear above tail lights (drv side blue ofc side red) and one each side at rear up high (drv side red ofc side blue). Lights to flash in an "X" pattern. | 2436 |
| 5600-0115 | Tomar RECT-46 LED (PR) one red one blue. Includes Tomar 930DM-LED-LB flasher and RECT-46LBZ chrome bezels. Locate up high on rear of body just below compartment top (drv side red ofc side blue). Lights to flash in an "X" pattern with the lower level warning lights. | 1132 |
| 5600-0117 | Whelen Ultra Freedom Micro Edge LED (PR) model MCFLED25 clear lens with red LEDs. Location [#LOC]. | 2209 |
| 5600-0118 | Warning light Whelen 500 series TIR6 Super LED (PR) red. Surface mounted 5TSMAC bezel with weatherproof connector. Location: [#LOC]. | 581 |

| Item No. | Description | |
|---|---|---|
| 5600-0122 | Light Code 3 model 2122NFPA1 (PR) 22.5" long. Red LED with clear lens. Location: one each side on rear body compartment top. | 4396 |
| 5600-0123 | Warning light Code 3 LXEX2F-AA LED (PR) amber. Surface mounted with bezel. Location: (1) each side rear compartment face up high | 881 |
| 5600-0124 | Warning light Code 3 LXEX1F-R LED (PR) red. Surface mounted with bezel. Location: [#LOC] | 800 |
| 5600-0125 | Code3 model 780 LED flasher. Flasher will control lower level warning lights ipo multiplexing | 1871 |
| 5600-0126 | Body Whelen strobe power supply located in R1 on rear wall just below offset. | 138 |
| 5600-0128 | Warning light Whelen 600 series split Super LED (PR) red/amber. Location: [#LOC] | 890 |
| 5600-0129 | Warning light Whelen 600 series split Super LED (PR) red/clear. Location: [#LOC]. | 959 |
| 5600-0130 | Whelen model UFM8 LED flasher (PR). Flashers will control lower level warning lights ipo internal flashers. Locate (1) in cab and (1) in body. | 1266 |
| 5600-0131 | Light Whelen model PSR00FRR LED (PR) red. Location: [#LOC]. | 438 |
| 5600-0132 | Warning light Federal Signal QL64XF LED (PR). (1) red and (1) green. Location: Red driver and green officer in front quad inboard of NFPA warning light | 921 |
| 5600-0133 | Warning light Whelen 900 series Super LED model 90RR5FRR (PR) red. Location: [#LOC]. | 1350 |
| 5600-0134 | Warning light Whelen 600 series LED red/clear. Surface mounted with weatherproof connector(PR). Location: [#LOC] | 893 |
| 5600-0136 | Federal MicroEscape LED beacon (PR) with [#COL] lenses. Location: [#LOC]. Requires additional upper level warning or Signal Master. | 2306 |
| 5600-0137 | Warning light Whelen 700 series Super LED (PR) red/clear. Surface mounted with weatherproof connector. Location: [#LOC] | 904 |
| 5600-0138 | Warning light Whelen LIN3 series Super LED (PR) red with clear lens. Surface mounted RFLANGCD bezel with weatherproof connector. Location: [#LOC] | 433 |
| 5600-0139 | Whelen beacon with LED upper beacon and 700 series Super LED (PR) model B6LED with red LEDs/clear domes and [#COL] LEDs/clear lenses. Location: [#LOC]. | 3254 |
| 5600-0140 | Warning light circuit wiring through chassis reverse. All warning lights. | 88 |
| 5600-0142 | Warning light Whelen 900 series Super LED model 90RA5FCR (PR) split red (bottom) / amber (top) with clear lenses. Location: [#LOC] | 1350 |
| 5600-0143 | Warning lights Whelen 600 series Super LED (PR) red w/clear lens. Location: [#LOC]. | 688 |
| 5600-0144 | Warning light Whelen 500 series TIR6 Super LED (PR) blue. Surface mounted 5TSMAC bezel with weatherproof connector. Location: [#LOC] | 581 |
| 5600-0147 | Warning light Whelen 600 series LED (PR). Red driver blue officer surface mounted with weatherproof connector. Location: [#LOC] | 954 |
| 5600-0151 | Whelen Ultra Freedom Micro Edge LED (PR) (1) driver Model MCFLED25 clear lense with red LEDs and (1) officer MCFLED22 clear lense with blue LEDs. Requires addtional upper level warning lights to meet NFPA. Location: [#LOC]. | 2367 |
| 5600-0152 | Warning light Whelen 500 series LED (PR) green. Includes switch on pump panel labeled "Ready for Water" Location: (1) centered between grille and windshield on slope (1) driver side (inside of beavertail if so equipped) up high below hosebed opposite officer discharge. | 886 |
| 5600-0153 | Warning light Whelen 600 series split Super LED (PR) red/blue driver red/amber officer. Location: [#LOC]. | 890 |
| 5600-0154 | Warning light Whelen 600 series Super LED (PR). Red driver blue officer surface mounted with weatherproof connector. Location: [#LOC]. | 688 |
| 5600-0156 | Warning light Federal Signal QL64XF LED (PR) green. Surface mounted with bezel. Location: [#LOC]. | 760 |
| 5600-0157 | Federal Model SY12FS Sentry with green dome. Includes switch on driver overhead. Location: pole mounted center rear cab roof. | 446 |
| 5600-0160 | Warning light Federal Signal QL97XF LED (PR) red. Surface mounted with bezel (if applicable). Location: [#LOC]. | 994 |
| 5600-0161 | Warning light Federal Signal QL97XF LED (PR) amber. Surface mounted with bezel (if applicable). Location: [#LOC] | 994 |
| 5600-0162 | Warning light Federal Signal QL64XF LED (PR) blue. Surface mounted with bezel. Location: [#LOC]. | 691 |
| 5600-0164 | Warning light Federal Signal QL64XF LED (PR) white. Surface mounted with bezel. Location: [#LOC]. | 799 |
| 5600-0165 | Warning light Whelen 500 series Super Linear LED (PR) green. Location: [#LOC]. | 612 |
| 5600-0166 | Warning light Whelen 600 series Super LED (PR) green. Location: [#LOC]. | 906 |
| 5600-0168 | Fed QuadraFlare QL97SC-RA Red/Amber split color LED lights located on rear of body up high. Red on top on left side and bottom on right side to simulate "X" pattern. Includes external flasher. | 1242 |
| 5600-0169 | Warning light Whelen 900 series Super LED driver side amber / officer side red model 90AA5FAR / 90RR5FRR. Location: [#LOC]. | 1350 |
| 5600-0172 | Warning light Whelen 900 series Super LED model 90AA5FAR (PR) amber. Location: [#LOC]. | 1350 |
| 5600-0173 | Federal MicroEscape NFPA compliant LED beacons (PR) clear lenses with [#COL] LED reflectors. Location: [#LOC]. | 1722 |
| 5600-0174 | Warning light Whelen 900 series Super LED model 90RR5FRR (2) (PR) red. Location: (1) each side rear compartment face up high and (1) each side mounted to the side body towards rear. All wired as part of upper rear warning lights. | 2777 |

| Item No. | Description | |
|---|---|---|
| 5600-0176 | Mars 888 pedestal mounted traffic clearing lights with clear lenses located one each side of cab above outer quad bezel. | 2149 |
| 5600-0177 | Whelen model UFM8 LED flasher (3). Flashers will control warning lights ipo internal flashers. Locate (1) in cab and (2) in body. | 1898 |
| 5600-0181 | Warning light Federal Signal Model 360501 LED w/ bezel (PR). Surfaced mounted with blue driver and red officer lenses. Location: [#LOC]. | 638 |
| 5600-0182 | Whelen beacon with LED upper beacon and 700 series Super LED (PR) Model B6LED with amber domes and [#COL] LEDs. Location [#LOC] | 3254 |
| 5600-0183 | Warning light Whelen 600 series Super LED (PR). blue driver green officer surface mounted with weatherproof connector. Location: [#LOC]. | 798 |
| 5600-0184 | Warning light Federal Signal QL64XF LED (PR). (1) red driver (1) blue officer. Surface mounted with bezel. Location: [#LOC] | 691 |
| 5600-0185 | Federal Model IVP100 Vector pod (PR) located at the rear cab corners. Driver side to be amber with switch on driver's switch panel and automatically turn off when warning lts are on. Officer side to be blue with switch on driver's switch panel. | 878 |
| 5600-0187 | Warning light Federal Signal QL97XF LED (PR). (1) red driver (1) blue officer. Surface mounted with bezel (if applicable). Location: [#LOC]. | 994 |
| 5600-0189 | Federal Intelli model 650205 LED flasher (PR). Flashers will control lower level warning lights ipo internal flashers. Locate (1) in cab and (1) in body. | 1004 |
| 5600-0190 | Warning light Whelen 600 series Super LED (PR). Blue driver amber officer surface mounted with weatherproof connector. Location: [#LOC]. | 688 |
| 5600-0191 | Whelen beacon with LED upper beacon and 700 series Super LED (PR) Model B6LED with amber driver and red officer domes and [#COL] LEDs. Location [#LOC]. | 3254 |
| 5600-0193 | Warning light Weldon Diamondback V46W-C00R LED (PR) red w/ clear lenses. Location: [#LOC]. | 652 |
| 5600-0194 | Whelen Super LED beacon Model L11H with amber dome. Includes switch in cab accessible to the driver. Location: center of rear cab roof. | 941 |
| 5600-0195 | Code3 model XP9501NFPA1 (PR) red LED with clear domes. Location: [#LOC]. | 2336 |
| 5600-0196 | Fed QuadraFlare QL64SC-RC Red/White split color LED lights in ptd smooth plt alum box above the grille. Red on top on left side and bottom on right side to simulate "X" pattern. Wired to lower zone lighting and switched off with parking brake. Includes ext flasher. | 1836 |
| 5600-0197 | Warning light Whelen 600 series Super LED (PR). red driver green officer surface mounted with weatherproof connector. Location: [#LOC]. | 798 |
| 5600-0198 | Whelen PE215 emitter. Emitter and control only. Wire through parking brake. Location: [#LOC]. | 989 |
| 5600-0199 | Whelen beacon with LED upper beacon and 700 series Super LED (PR) Model B6LED with red driver and blue officer domes and [#COL] LEDs. Location [#LOC]. | 3254 |
| 5600-0200 | Whelen beacon with LED upper beacon and 700 series Super LED (PR) Model B6LED with red driver and amber officer domes and [#COL] LEDs. Location [#LOC]. | 3254 |
| 5600-0201 | Warning light Whelen 900 series Super LED model 90RB5FCR (PR) split red / blue with clear lense. Location: [#LOC]. | 1350 |
| 5600-0202 | Warning light Weldon Diamondback V46W-C00R LED (PR) red w/ clear lenses. Includes diamond plate mounting box. Location: [#LOC]. | 1051 |
| 5600-0205 | Warning light Federal Signal GL1F-B LED (PR) blue. Location: [#LOC]. | 654 |
| 5600-0206 | Whelen Micro 400 Super LED (PR) model MC40ED3. Driver side red with red lenses officer side red side facing with red lenses side and forward; amber rear facing with amber lens. Location [#LOC]. | 2825 |
| 5600-0213 | Whelen beacon with halogen rotator and 700 series LED (PR) Model B6TM with red dome on driver side amber dome officer side and [#COL] LEDs. Location [#LOC]. | 1609 |
| 5600-0215 | Power Arc (PR) Model LED210 yellow with clear lenses. Location: [#LOC]. | 1425 |
| 5600-0216 | Warning light Whelen M9 series Super LED (PR) red. Location: [#LOC]. | 1556 |
| 5600-0217 | Power Arc (PR) Model LED210 red with clear lenses. Location: [#LOC]. | 1425 |
| 5600-0222 | Whelen Super LED beacon Model L31H pole mounted with green dome. Includes switch in officer overhead labeled "Command". Location: center of cab roof to rear of lightbar. | 1057 |
| 5600-0223 | Warning light Code 3 378ABZ LED (PR) amber. Surface mounted with bezel. Location: [#LOC]. | 778 |
| 5600-0226 | Warning light Federal Signal Model 360501-04 LED w/ bezel (PR). Surfaced mounted with red lens. Location: [#LOC]. | 457 |
| 5600-0227 | Warning light Whelen 600 series Super LED (PR). Red driver blue officer surface mounted with clear lenses and weatherproof connector. Location: [#LOC]. | 688 |
| 5600-0228 | Warning light Whelen 900 series Super LED (PR) with clear lenses. (1) model 90RR5FCR red driver and (1) model 90BB5FCR blue officer. Each light shall have a clear lense w/ colored LEDs. Location: [#LOC]. | 1350 |
| 5600-0230 | Warning light Whelen 600 series Super LED (PR) blue with blue lens. Location: [#LOC]. | 688 |
| 5600-0231 | Warning light Whelen 600 series Super LED (EA) red. Location: below scene light on driver rear compt face. | 345 |
| 5600-0234 | Warning light Whelen Dominator series LED model D844000 red driver/blue officer with clear lenses. Location: [#LOC]. Wire through lower level warning. | 1034 |

| Item No. | Description | |
|---|---|---|
| 5600-0236 | Whelen beacon with LED upper beacon and 700 series Super LED (PR) model B6LED with blue driver and red officer domes and [#COL] LEDs. Location: [#LOC]. | 3254 |
| 5600-0238 | Warning light Whelen 600 series Super LED (PR). (1) red steady burn front driver side below windshield and (1) flashing amber driver side above tail lights to meet California DOT requirements. | 688 |
| 5600-0240 | Warning light Whelen M4R LED (4) red. Surface mounted with weatherproof connector. Flashing lights wired through door ajar. Location: One on each of the interior cab doors (outboard position). | 1361 |
| 5600-0241 | Warning light Whelen M6R series Linear Super LED (PR) red. Location: [#LOC]. | 785 |
| 5600-0242 | Warning light Whelen M6 series Linear Super LED (PR) split red/amber with clear lens. Location: [#LOC]. | 861 |
| 5600-0243 | Warning light Whelen 500 series split TIR6 Super LED (PR) red/amber. Surface mounted 5TSMAC bezel with weatherproof connector. Location: [#LOC]. | 665 |
| 5600-0244 | Whelen Micro 400 Super LED (PR) model MC40ED3. Driver side red with clear lenses officer side red side facing with clear lenses side and forward; amber rear facing with clear lens. Location [#LOC]. | 2825 |
| 5600-0245 | Warning light Federal Signal QL64XF LED (PR) red with clear lens. Surface mounted with bezel. Location: [#LOC] | 691 |
| 5600-0248 | Warning light Whelen M9 series Super LED (PR) red driver blue officer with clear lenses. Location: [#LOC]. | 1556 |
| 5600-0249 | Warning light Whelen M6 series Linear Super LED (PR) red driver blue officer with clear lenses. Location: [#LOC]. | 785 |
| 5600-0250 | Whelen beacon with LED upper beacon and 700 series Super LED (PR) Model B6LED with red LED/clear dome driver and blue LED/clear dome officer and [#COL] LEDs/clear lenses. Location: [#LOC]. | 3254 |
| 5600-0251 | 3m Opticom GPS vehicle system kit. Includes antenna radio and control unit. Wired through park brake. | 9467 |
| 5600-0252 | Hazard (door ajar) light Federal Signal Fire Bolt strobe. Location: [#LOC]. | 275 |
| 5600-0253 | Warning light Federal Signal QL97XF LED (PR). (1) red driver (1) amber officer. Surface mounted with bezel (if applicable). Location: [#LOC] | 994 |
| 5600-0254 | Warning light Federal Signal QL97XF LED (PR). (1) amber driver (1) red officer. Surface mounted with bezel (if applicable). Location: [#LOC] | 994 |
| 5600-0255 | Warning light Whelen 900 series Super LED driver side red model (90RR5FRR) / officer side amber (90AA5FAR). Location: [#LOC] | 1350 |
| 5600-0256 | Warning light Whelen M-Series Super LED model M9J (PR) red/blue. Surface mounted with weatherproof connector. Location: [#LOC]. | 1556 |
| 5600-0257 | Warning light Whelen M6 series Linear Super LED (PR) split red/blue with clear lens. Location: [#LOC]. | 861 |
| 5600-0258 | Warning light Whelen M9RC series Super LED (PR) red with clear lens. Location: [#LOC]. | 1320 |
| 5600-0259 | Warning light Whelen M6BC series Linear Super LED (PR) blue with clear lens. Location: [#LOC]. | 785 |
| 5600-0260 | Warning light Weldon Diamondback V46W-C00A LED (PR) amber w/ clear lenses. Location: [#LOC]. | 652 |
| 5600-0263 | Whelen Super LED beacon Model L31H with green dome. Includes switch on pump operator panel labeled "Command". Location: centered rear cab roof. | 1057 |
| 5600-0264 | Whelen beacon with LED upper beacon and 700 series Super LED (PR) Model B6LED with blue LED/clear dome driver and red LED/clear dome officer and 700 series [#COL] LEDs/clear lenses. Location: [#LOC]. | 3254 |
| 5600-0265 | Hazard light 2.5" incandescent additional amber. Location and function: center overhead for light tower. Wired through audible alarm if equipped. | 41 |
| 5600-0266 | Whelen Super LED beacon (PR) model L31H with red driver blue officer LED and clear domes. Location rear upper body on aerial style brackets. | 2124 |
| 5600-0267 | Warning light Whelen Dominator series LED with red driver/blue officer with clear lenses. Location: [#LOC]. Wire through lower level warning. | 1052 |
| 5600-0268 | Mars 888 pedestal mounted traffic clearing light located one each side of cab outboard above the outer quad bezel on contoured pedestal bracket. Lens color(s): driver red officer clear. | 2563 |
| 5600-0269 | Whelen Super LED beacon (PR) model L31H with red driver amber officer LED and clear domes. Location [#LOC]. | 2124 |
| 5600-0272 | Hazard (door ajar) light Federal Signal 2.5" LED model 607120-04. Location: [#LOC]. | 67 |
| 5600-0273 | Warning light Whelen 900 series Super LED (PR). (1) model 90RR5FCR red driver and (1) model 90BB5FCR blue officer. Each light shall have a clear lense w/ colored LEDs. Location: side facing (1) each side upper front body panels and side facing (1) each side upper rear body panels. | 1350 |
| 5600-0274 | Warning light Whelen 900 series Super LED (PR). (1) model 90RR5FCR red driver and (1) model 90BB5FCR blue officer. Each light shall have a clear lense w/ colored LEDs. Location: Rear facing up high on the rear one above each other. | 1350 |
| 5600-0275 | Warning light Whelen M6AC series Linear Super LED (PR) amber with clear lens. Location: [#LOC]. | 785 |
| 5600-0276 | Whelen Ultra Freedom Micro Edge LED (PR) model MCFLED clear lens with amber driver / red officer LEDs. Location [#LOC]. | 2209 |

| Item No. | Description | |
|---|---|---|
| 5600-0277 | Warning light Whelen M6C series Linear Super LED (PR) white. Location: [#LOC]. | 785 |
| 5600-0284 | Whelen Super LED beacon (PR) model L31H with blue driver red officer LED and clear domes. Location [#LOC]. | 2124 |
| 5600-0285 | Warning light Roto-Ray LED with (1) red (1) blue and (1) clear lenses. Locate on front of cab centered below windshield. | 3156 |
| 5600-0286 | Warning light Whelen M6RC series Super LED (PR) red with clear lens. Location: [#LOC]. | 751 |
| 5600-0287 | Warning light Whelen Dominator Plus model DP880000 with (8) red LINZ6 LEDs. Location: [#LOC]. Wire through lower level warning. | 1728 |
| 5600-0288 | Whelen red TIR3 LED light heads (2). Locate in rubrails below compartments L1 and R1. | 329 |
| 5600-0289 | Warning light Whelen 900 series Super LED model 90BB5FBR (PR) blue. Location: [#LOC]. | 1350 |
| 5600-0290 | Warning light Whelen 600 series Super LED (PR) red with diamond plate mounting boxes. Location: [#LOC]. | 884 |
| 5600-0291 | Warning light Roto Ray LED with (1) red (1) green and (1) white lights. Locate on front of cab centered below windshield. | 3156 |
| 5600-0292 | Warning light Whelen 900 series Super LED model 90RR5FRC (PR) red w/ clear lens. Location: [#LOC]. | 1350 |
| 5600-0293 | Light Whelen model PSC00FCR LED (PR) white. Lights are wired to reverse and respective turn signal. Location: (1) each side below L1/R1 just ahead of rear wheels in rubrail (if equipped). | 1005 |
| 5600-0294 | Warning light Federal Signal IMPAXX model IPX600-R red LED w/ bezel (PR). Surfaced mounted with clear lens. Location: [#LOC]. | 531 |
| 5600-0295 | Warning lights Weldon Diamondback V79W-C10A LED amber w/ clear lenses (PR). Location: [#LOC]. | 924 |
| 5600-0296 | Warning light Weldon Diamondback V46W-C LED (PR) red driver amber officer w/ clear lenses. Location: [#LOC]. | 652 |
| 5600-0297 | Warning light Whelen Dominator series LED model D860020 red/white. Includes R/W/R/R/R/R/W/R LEDs with clear lenses. Location: [#LOC]. Wire through lower level warning. | 1038 |
| 5600-0298 | Warning light Power Arc model M90FK-W LED (PR). Color: White. Location: [#LOC]. | 1137 |
| 5600-0299 | Warning light Federal Signal IMPAXX LED model IPX302-4 w/ bezel (PR). Surfaced mounted with red lens. Location: [#LOC]. | 365 |
| 5600-0300 | Warning lights Weldon Diamondback V79W-C00R LED red w/ clear lenses (PR). Location: [#LOC]. | 924 |
| 5600-0301 | Warning light Whelen M2 Super LED warning lights. Includes (2) red M2R LED light heads w/chrome flanges (if applicable). Location: [#LOC]. | 626 |
| 5600-0302 | Warning light Whelen M2 Super LED warning lights. Includes (2) red M2RC LED light heads with clear lenses and chrome flanges (if applicable). Location: [#LOC]. | 626 |
| 5600-0305 | Warning light Whelen M6 series Linear Super LED (PR) amber driver red officer with clear lenses. Location: [#LOC]. | 785 |
| 5600-0306 | Opticom Emitter 3M 794H. LED emitter and control only. Location and activation: [#LOC]. | 2647 |
| 5600-0307 | Warning light Whelen 600 series LED (PR) with clear lens. Red driver blue officer surface mounted with weatherproof connector. Location: [#LOC] | 954 |
| 5600-0309 | Warning light Whelen Vertex Super LED warning lights. Includes (2) red model VTX609R LED light heads with clear lens w/chrome flanges model VTXFC. Location: [#LOC]. | 586 |
| 5600-0310 | Warning light Whelen M6 series Linear Super LED (PR) split red/clear with clear lens. Location: [#LOC]. | 861 |
| 5600-0311 | Warning light Whelen 900 series Super LED model 90AA5FCR (PR) amber with clear lenses. Location: [#LOC]. | 1350 |
| 5600-0312 | Light Whelen model PSA00FAR LED (PR) amber. Location: [#LOC]. | 438 |
| 5600-0313 | Warning light Whelen 900 series Super LED with clear lens model 90BB5FCR (PR) blue. Location: [#LOC]. | 1350 |
| 5600-0314 | Federal Signal Vision LED rotating beacons model VSLR-IPX-R1R21 with rear facing IPX6 red LED warning light (Requires additional rear facing warning lights for NFPA compliance). Location: [#LOC]. | 2658 |
| 5600-0315 | Whelen Micro Liberty LED (PR) (1) driver Model MCSLED2R clear lense with red LEDs and (1) officer MCSLED2B clear lense with blue LEDs. Location: [#LOC]. | 1861 |
| 5600-0316 | Warning light Whelen M4AC Super-LED lights (PR) amber with clear lenses. Location: [#LOC]. | 1007 |
| 5600-0317 | Whelen Super LED beacon (PR) model L31H with red driver blue officer LED and clear domes. Location: [#LOC]. | 2124 |
| 5600-0318 | Whelen Ultra Freedom Micro Edge LED (PR) (1) officer Model MCFLED25 clear lense with red LEDs and (1) driver MCFLED22 clear lense with blue LEDs. Requires addtional upper level warning lights to meet NFPA. Location: [#LOC]. | 2367 |
| 5600-0320 | Warning light Whelen ION series Super LED (2) red and (1) white with clear lens. Location: [#LOC]. | 1041 |
| 5600-0321 | Mars 888 pedestal mounted traffic clearing light located one each side of cab outboard above the outer quad bezel on contoured pedestal brkt. Lens color: clear. | 2563 |
| 5600-0322 | Warning light Whelen M7D series Linear Super LED (PR) split red/clear with clear lens. Location: [#LOC]. | 872 |
| 5600-0327 | Warning light Whelen Dominator series LED model D880000 red with clear lenses. Location: [#LOC]. Wire through lower level warning. | 1034 |

| Item No. | Description | |
|---|---|---|
| 5600-0328 | Warning light Whelen M7 series Linear Super LED (PR) white light with clear lens. Location: [#LOC]. | 763 |
| 5600-0330 | Warning light Federal Signal IMPAXX model IPX602-R red LED w/ bezel (PR). Surfaced mounted with red lens. Location: [#LOC]. | 531 |
| 5600-0331 | Federal Signal Vision LED rotating beacons model VSLR-R with red LED warning light(s) and red lenses (Requires additional rear facing warning lights for NFPA compliance). Location: [#LOC]. | 1987 |
| 5600-0332 | Mars 888 pedestal mounted traffic clearing light located (1) each side of cab outboard above the outer quad bezel on contoured pedestal bracket. Driver side red officer side clear. | 2563 |
| 5600-0333 | Warning light Whelen M9 series Super LED (PR) red driver amber officer. Location: [#LOC]. | 1556 |
| 5600-0334 | Warning light Whelen IONWR series Super LED red in color. Location: [#LOC]. | 715 |
| 5600-0336 | Warning light Roto Ray LED with (1) red (1) amber and (1) clear lights. Locate on front of cab centered below windshield. | 3156 |
| 5600-0338 | Warning light Whelen M9 series Super LED (PR) red officer amber driver. Location: [#LOC]. | 1556 |
| 5600-0339 | Warning light Whelen 600 series Super LED (PR). Red officer blue driver surface mounted with weatherproof connector. Location: [#LOC]. | 688 |
| 5600-0340 | Warning light Whelen M6 series Linear Super LED (PR) red driver blue officer. Location: [#LOC]. | 785 |
| 5600-0341 | Warning light Whelen 600 series split Super LED (PR) red/blue with clear lens. Location: [#LOC]. | 890 |
| 5600-0342 | Whelen beacon with LED upper beacon and 700 series Super LED (PR) Model B6LED with blue driver and amber officer domes and [#COL] LEDs. Location [#LOC]. | 3254 |
| 5600-0343 | Whelen red TIR3 LED light heads (2). Locate in rubrail below pump module offset forward. | 329 |
| 5600-0345 | Warning light Federal Signal IMPAXX LED model IPX300-4 w/ bezel (PR). Surfaced mounted red LEDs with clear lens. Location: [#LOC]. | 365 |
| 5600-0347 | Warning light Whelen 900 series Super LED blue driver amber officer. Location: [#LOC]. | 1350 |
| 5600-0350 | Hazard (door ajar) light Whelen Vertex red LED model VTX609R w/chrome bezel. Location: [#LOC]. | 295 |
| 5600-0352 | Warning light Whelen M6G series Linear Super LED (PR) green. Location: [#LOC]. | 1008 |
| 5600-0354 | Warning lights Whelen LINZ6 LEDs (PR) red in color with chrome bezels if applicable. Location: [#LOC]. | 524 |
| 5600-0355 | Whelen beacon with LED upper beacon and 700 series Super LED (PR) Model B6LED with blue domes and [#COL] LEDs. Location: [#LOC]. | 3254 |
| 5600-0356 | Federal Signal Pulsator LED beacon pole mounted with green dome. Mounted on a ROM external push/pull KR-SB-500-W4-I series pole with a flat surface to accommodate beacon mounting. Includes switch in officer overhead labeled "Command". Location: driver side rear of cab. | 1632 |
| 5600-0357 | Warning light Whelen M6 series Linear Super LED (PR) red driver green officer. Location: [#LOC]. | 785 |
| 5600-0358 | Warning light Federal Signal Viper EXT Model VPX802-4 LED w/ bezel rear upper level package. Includes (9) surfaced mounted with red lens; (5) up high rear of body and (2) side facing on each side of body up high and rearward (as applicable). | 2800 |
| 5600-0359 | Warning light Federal Signal IMPAXX LED model IPX302 w/ bezel (PR) (driver blue officer red). Surfaced mounted with colored lens. Location: [#LOC]. | 365 |
| 5600-0360 | Warning light Federal Signal QuadraFlare QL64XF LED (EA) red. Light to be steady burn to meet California DOT requirements. Surface mounted with bezel. Location: [#LOC]. | 309 |
| 5600-0362 | Power Arc beacon (PR) Model LEDB210 with [#COL] domes. Location: [#LOC]. | 1400 |
| 5600-0364 | Warning light Roto Ray LED with (2) green and (1) clear lights. Locate on front of cab centered below windshield. | 3156 |
| 5600-0366 | Warning light Whelen 500 series TIR6 Super LED (2) blue and (3) amber. Surface mounted 5TSMAC bezel with weatherproof connector. Lights to activate when park brake is set in blocking mode. Location: [#LOC]. | 1450 |
| 5600-0367 | Warning light Whelen 600 series Super LED (PR) amber with clear lens. Location: [#LOC]. | 688 |
| 5600-0368 | Warning light Whelen M6A series Linear Super LED (PR) amber. Location: [#LOC]. | 785 |
| 5600-0369 | Whelen Ultra Freedom Micro Edge LED (PR) model MCFLED2 clear lens with red driver / amber officer LEDs. Location: [#LOC]. | 2209 |
| 5600-0370 | Warning light Whelen M-Series Super LED model M9AC (PR) amber with clear lens. Surface mounted with weatherproof connector. Location: [#LOC]. | 1320 |
| 5600-0371 | Whelen Ultra Freedom Micro Edge LED (PR) model MCFLED2RB clear lens with (1) red/(1) blue LEDs. Location: [#LOC]. | 2209 |
| 5600-0372 | Light Code 3 model DB2-2PZNFPA2 (PR) with clear lenses. Located: [#LOC]. | 2217 |
| 5600-0373 | Warning Light Code3 model #65BZCB blue LED with clear lens and chrome bezel (PR). Location: [#LOC]. | 1235 |
| 5600-0374 | Warning light Federal Signal QL64XFC LED (PR) blue with clear lenses. Surface mounted with bezel. Location: [#LOC]. | 691 |
| 5600-0375 | Warning light Federal Signal IMPAXX model IPX600-B blue LED w/ bezel (PR). Surfaced mounted with clear lens. Location: [#LOC]. | 531 |
| 5600-0377 | Federal Signal Vision LED rotating beacons model VSLR-R2A02 with rear facing IPX6 amber LED warning light. Location: [#LOC]. | 2658 |
| 5600-0378 | Warning light Code 3 65BZCR LED (PR) Red with clear lens. Surface mounted with bezel. Location: [#LOC] | 654 |

| Item No. | Description | |
|---|---|---|
| 5600-0379 | Warning light Federal Signal QL97XFC-R LED (PR) red with clear lenses. Surface mounted with bezel (if applicable). Location: [#LOC]. | 994 |
| 5600-0380 | Warning light Federal Signal QL64SFC split LED (PR) driver red/clear officer red/green. Surface mounted with bezel. Location: [#LOC]. | 869 |
| 5600-0381 | Hazard (seat belt warning) blue light 2" LED. Location: Adjacent to door ajar light. | 41 |
| 5600-0383 | Warning light Whelen 900 series Super LED (PR). (1) model 90RR5FRR red driver and (1) model 90BB5FBR blue officer. Location: [#LOC]. | 1350 |
| 5600-0384 | Tomar model RECT-79-TSMF bezel (PR) for Whelen 900 series lights. Lights to be angled forward. Location: driver and officer gravel shield mounted lights. | 207 |
| 5600-0385 | Whelen Super LED ROTA-BEAM beacon (PR) model R316 Series [#COL] domes. Location [#LOC]. | 2313 |
| 5600-0386 | Warning light Whelen M2 Super LED warning lights. Includes (2) amber M2A LED light heads w/chrome flanges (if applicable). Location: [#LOC]. | 626 |
| 5600-0387 | Whelen amber TIR3 LED light heads (2). Locate [#LOC]. | 329 |
| 5600-0388 | Hazard (light tower ajar) amber light 2" LED. Location: [#LOC]. | 41 |
| 5600-0389 | Warning light Whelen M4RC Super-LED lights (PR) red with clear lenses. Location: [#LOC]. | 602 |
| 5600-0390 | Mars 888 LED pedestal mounted traffic clearing light located one each side of cab outboard above the outer quad bezel on contoured pedestal brkt. Lens color: clear. | 4065 |
| 5600-0391 | Warning light Whelen M4R Super-LED lights (PR) red. Location: [#LOC]. | 602 |
| 5600-0392 | Whelen Ultra Freedom Micro Edge LED (PR) model MCFLED2 clear lens with blue driver / red officer LEDs. Location (1) each side of body on rearward compartment top. | 2153 |
| 5600-0393 | Warning light Whelen M6GC series Linear Super LED (PR) green with clear lenses. Location: [#LOC]. | 802 |
| 5600-0395 | Warning light Whelen M-Series Super LED model M9K (PR) red/amber. Surface mounted with weatherproof connector. Location: (1) on each side up high rear of body. | 1556 |
| 5600-0396 | Warning light Whelen Dominator series LED model D66000 red with clear lenses. Location: [#LOC]. Wire through lower level warning. | 918 |
| 5600-0397 | Warning light Whelen WIONA series Super LED amber in color (ea). Locate rear of body below directional lightbar wired through reverse. | 358 |
| 5600-0398 | Warning light Whelen 500 series TIR6 Super LED (PR)1-red driver 1-green officer. Surface mounted 5TSMAC bezel with weatherproof connector. Location: [#LOC]. | 581 |
| 5600-0399 | Warning light Whelen M9 series Super LED (PR) red with diamond plate mounting boxes. Location: [#LOC]. | 1665 |
| 5600-0400 | Warning light Whelen IONWA series Super LED amber in color. Location: [#LOC]. | 715 |
| 5600-0401 | Warning light Whelen M6B series Linear Super LED (PR) blue. Location: [#LOC]. | 785 |
| 5600-0402 | Warning light Whelen M9 series Super LED (PR) blue driver red officer with clear lenses. Location: [#LOC]. | 1556 |
| 5600-0404 | Whelen beacon with LED upper beacon and 700 series Super LED (PR) Model B6LED with amber LED/clear dome driver and red LED/clear dome officer and [#COL] LEDs/clear lenses. Location: [#LOC]. | 3254 |
| 5600-0405 | Warning light Whelen M9 series Super LED (PR) red with (1) officer side diamond plate mounting box. Location: driver side facing uppper body corner officer rear compartment top outboard. | 1614 |
| 5600-0406 | Warning light Whelen 500 series TIR6 Super LED (2) blue and (3) red. Surface mounted 5TSMAC bezel with weatherproof connector. Lights to activate when park brake is set in blocking mode. Location: [#LOC]. | 1450 |
| 5600-0407 | Whelen Ultra Freedom Micro Edge LED (PR) model MCFLED red lens with red LEDs. Location [#LOC]. | 2209 |
| 5600-0408 | Warning light Federal Signal QL97XF LED (PR) red with diamond plate mounting box. Surface mounted with bezel (if applicable). Location: [#LOC]. | 1190 |
| 5600-0409 | Whelen beacon with LED upper beacon and 700 series Super LED (PR) model B6LED with red domes and 700 series Super LED scene lights rear facing. Location: [#LOC]. | 3434 |
| 5600-0410 | Warning light Whelen 600 series Super LED (PR) red with black flange. Location: [#LOC]. | 688 |
| 5600-0412 | Warning light Federal Signal QL64XF LED (EA) white. Surface mounted with bezel. Location: [#LOC]. | 401 |
| 5600-0414 | Warning light Whelen 900 series Super LED (PR). (1) model 90RR5FRR red officer and (1) model 90BB5FBR blue driver. Location: [#LOC]. | 1350 |
| 5600-0415 | Warning/Scene light Whelen M9V2R Super LED (PR) red. Location: [#LOC]. | 2266 |
| 5600-0417 | Enclose bottom of aerial style bracket for no exposed wiring. | 106 |
| 5600-0418 | Warning light Whelen 500 series TIR6 Super LED red. Surface mounted 5TSMAC bezel with weatherproof connector. Light to be steady burn while the parking brake is disengaged. Location: Centered in front cab grill | 338 |
| 5600-0419 | Mars 888 LED pedestal mounted traffic clearing light located one each side of cab outboard above the outer quad bezel on contoured pedestal brkt. Lens color: Red. | 4065 |
| 5600-0420 | Power Arc (PR) Model LED210 driver blue officer red. Location: [#LOC]. | 1425 |
| 5600-0421 | Whelen beacon with Rota-Beam LED upper beacon and M7 series Super LED (PR) model B63M7 with red domes and [#COL] LEDs. Location: [#LOC]. | 3528 |
| 5600-0422 | Warning light Whelen WIONR series Super LED red in color (PR). Locate [#LOC]. | 638 |

| Item No. | Description | |
|---|---|---|
| 5600-0423 | Warning light Whelen Rota-Beam series model 6RBRC Super LED (PR) red with clear lenses. Location: [#LOC]. | 1097 |
| 5600-0424 | Warning light Whelen M6 series Linear Super LED (PR) blue driver red officer with clear lenses. Location: [#LOC]. | 785 |
| 5600-0425 | Code 3 / PSE Oscilaser warning light red (PR). Lights are to be located on front of cab above quad bezels. | 715 |
| 5600-0426 | Warning/Scene light Whelen M9V2 Super LED (PR) red driver blue officer with clear lenses. Location: [#LOC]. | 2266 |
| 5600-0427 | Warning light Whelen M9 series Super LED (PR) blue driver red officer. Location: [#LOC]. | 1556 |
| 5600-0428 | Warning light Whelen 500 series split TIR6 Super LED (PR) red/blue. Surface mounted 5TSMAC bezel with weatherproof connector. Location: [#LOC]. | 665 |
| 5600-0429 | Warning/Scene light Whelen M9V2 Super LED (PR) red driver blue officer. Location: [#LOC]. | 2266 |
| 5600-0430 | Whelen Rota-Beam LED lights (3) red/blue/red with clear lenses and smooth plate mounting box painted upper 2-tone job color. Location: centered below windshield. | 2097 |
| 5600-0431 | Warning light Whelen 600 series Super LED (PR). Amber driver blue officer surface mounted with weatherproof connector and clear lenses. Location: [#LOC]. | 688 |
| 5600-0432 | Warning light Whelen 600 series Super LED (PR). Red officer blue driver surface mounted with clear lenses and weatherproof connector. Location: [#LOC]. | 688 |
| 5600-0433 | Power Arc (PR) Model LED180 blue. Location: [#LOC]. | 1425 |
| 5600-0435 | Light Whelen PS strip LED (PR) red driver blue officer with clear lenses. Location: [#LOC]. | 611 |
| 5600-0436 | Federal Signal Sentry branch guard (PR). | 179 |
| 5600-0437 | Hazard (door ajar) light Whelen M2WR red LED w/black bezel. Location: [#LOC]. | 313 |
| 5600-0438 | Warning light Whelen 5V1R Super LED (PR) red with chrome flange (as applicable). Surface mounted with weatherproof connector. Location: [#LOC]. | 945 |
| 5600-0439 | Warning light Whelen Rota-Beam series model 6RBB Super LED (PR) blue. Location: [#LOC]. | 1097 |
| 5600-0440 | Warning light Whelen Rota-Beam series model 6RBR Super LED (PR) red. Location: [#LOC]. | 1097 |
| 5600-0441 | Warning light Whelen 500 series TIR6 Super LED (PR) amber. Surface mounted 5TSMAC bezel with weatherproof connector. Location: [#LOC]. | 581 |
| 5600-0442 | Warning light Whelen M9RC series Super LED (PR) red with clear lens and black housing. Location: [#LOC]. | 1320 |
| 5600-0443 | Warning/Scene light Whelen M9V2 Super LED (PR) red driver blue officer. Includes black bezels. Location: [#LOC]. | 2266 |
| 5600-0444 | Door mounted warning light Truck-Lite amber LED (PR). Compartment L5/R5 upper and lower outboard (to alternate flash). Wired through door ajar circuit. | 267 |
| 5600-0445 | Warning light Roto Ray LED with (1) red (1) amber and (1) green lights. Locate on front of cab centered below windshield. | 3156 |
| 5600-0446 | Warning light Whelen M2 Super LED warning lights. Includes (2) blue M2BC LED light heads (blue LEDs clear lens) w/chrome flanges (if applicable). Location: [#LOC]. | 626 |
| 5600-0447 | Whelen beacon with Rota-Beam LED upper beacon and M7 series Super LED (PR) model B63M7 with red domes/clear lenses and [#COL] LEDs. Location: [#LOC]. | 3528 |
| 5600-0448 | Warning light Whelen Rota-Beam series model 6RB Super LED (PR) driver blue officer red. Location: [#LOC]. | 1097 |
| 5600-0449 | Warning light Whelen WIONK series Super LED split red/amber in color (PR). Locate [#LOC]. | 638 |
| 5600-0450 | Warning light Whelen WIOND series Super LED split red/clear in color (PR). Locate [#LOC]. | 638 |
| 5600-0451 | Warning light Whelen 600 series Super LED. Four (4) red LEDs with smooth plate mounting boxes painted job color (boxes are as required dependent upon location). All four (4) lights shall be activated from a single dash mounted rocker switch. Location: One (1) pair mounted on the cab brow. One (1) pair mounted on or near the corner of the front bumper one (1) each side. | 1930 |
| 5600-0452 | Warning light Federal Signal QL97XF LED (PR). (1) blue driver (1) red officer. Surface mounted with bezel (if applicable). Location: [#LOC]. | 994 |
| 5600-0453 | Fed QuadraFlare QL97SF-RB Red/Blue split color LED lights. Surface mounted with bezel (if applicable). Location: [#LOC]. | 1242 |
| 5600-0454 | Warning light Whelen 900 series Super LED driver side red model (90RR5FCR) / officer side amber (90AA5FCR) with clear lenses. Location: [#LOC] | 1350 |
| 5600-0455 | Warning light Whelen 900 series Super LED driver side amber model (90AA5FCR) / officer side red (90RR5FCR). Location: [#LOC] | 1350 |
| 5600-0456 | Tomar Scorpion LED beacon (PR) model BCN-CR1 with clear domes. Location: [#LOC]. | 2058 |
| 5600-0457 | Mars 888 LED pedestal mounted traffic clearing light on front of cab centered below windshield. Lens color: clear. | 1827 |
| 5600-0458 | Warning light Whelen Vertex Super LED warning lights. Includes (2) split red/clear model VTX609D LED light heads with clear lenses and chrome flanges. Location: [#LOC]. | 586 |
| 5600-0459 | Warning light Whelen M-Series Super LED model M9K (PR) red/amber. Surface mounted with weatherproof connector. Location: [#LOC]. | 1556 |
| 5600-0460 | Mars 888 pedestal mounted traffic clearing light located one each side of cab outboard of the outer quad bezel on contoured pedestal bracket. Lens color(s): driver red officer clear. | 2563 |

| Item No. | Description | |
|---|---|---|
| 5600-0461 | Warning light Whelen WIONSM series Super LED driver split red/green officer split red/amber in color (PR). Locate (1) each side rear facing centered between DOT lights and corner in rubrail if equipped. | 641 |
| 5600-0462 | Warning light Whelen M6 series Linear Super LED (PR) red driver green officer with clear lenses. Location: [#LOC]. | 785 |
| 5600-0463 | Warning light Federal Signal Viper EXT model VPX800-4 red LED w/ bezel (PR). Surfaced mounted with clear lens. Location: [#LOC]. | 624 |
| 5600-0464 | Warning light Power Arc model M90 LED (PR). Color: Red. Location: [#LOC]. | 1137 |
| 5600-0465 | Warning light Whelen M9BC series Super LED (PR) blue with clear lens. Location: [#LOC]. | 1320 |
| 5600-0467 | Whelen beacon with LED upper beacon and M7 series Super LED (PR) model B6LED with driver amber officer red domes and [#COL] LEDs. Location: [#LOC]. | 3327 |
| 5600-0468 | Warning/ground light Whelen M6V2RC series Linear Super LED (PR) red with clear lenses. Location: [#LOC]. | 1634 |
| 5600-0469 | Warning light Roto Ray LED with (2) red w/ clear lenses and (1) clear lights. Locate on front of cab centered below windshield. | 3156 |
| 5600-0470 | Whelen beacon with Rota-Beam LED upper beacon and 700 series Super LED (PR) model B6370 with red domes and [#COL] LEDs. Location: [#LOC]. | 3453 |
| 5600-0471 | Diamond plate shield above officer side rear beacon. | 251 |
| 5600-0472 | Federal Signal Vision LED rotating beacons model VSLR with driver red LED warning light and officer amber LED warning light. (Requires additional rear facing warning lights for NFPA compliance). Location: [#LOC]. | 1987 |
| 5600-0473 | Warning light Whelen WIONL series Super LED split red/green in color (PR). Locate [#LOC]. | 729 |
| 5600-0475 | Warning light Whelen WIONSMCR series Super LED red. Location: [#LOC]. | 638 |
| 5600-0477 | Light Whelen model PSB00FBR LED (PR) blue. Location: [#LOC]. | 726 |
| 5600-0478 | Warning light Whelen M4D Super-LED lights (PR) red-clear split lenses. Location: [#LOC]. | 776 |
| 5600-0479 | Smooth plate mounting box painted job color for use with M9 fixtures. Location(s): driver and/or officer side rear and side facing upper level warning light. | 404 |
| 5600-0480 | Warning light Whelen Dominator series LED model D63030 red/white with clear lenses. Location: [#LOC]. Wire through lower level warning. | 918 |
| 5600-0481 | Code3 Arch model A36 [#COL] LED beacon (PR). Location: [#LOC]. | 2598 |
| 5600-0482 | Warning light Whelen WIONSMCD Super LED (3) split red/clear. Location: [#LOC]. | 1041 |
| 5600-0483 | Code3 Arch model A36 [#COL] LED beacon (PR). Location: [#LOC]. | 2598 |
| 5600-0484 | Warning light Power Arc model M90SM LED (PR). Color: [#COL] . Location: [#LOC]. | 1242 |
| 5600-0485 | Warning light Federal Signal QL64SFC split LED (PR) red/blue. Surface mounted with bezel. Location: [#LOC]. | 688 |
| 5600-0486 | Warning light Whelen 500 series TIR6 Super LED (2) amber and (3) red. Surface mounted 5TSMAC bezel with weatherproof connector. Lights to activate when park brake is set in blocking mode. Location: rear of body below hosebed. | 1450 |
| 5600-0487 | Warning light bezel (PR). Fabricated bezel on radius cab corner painted job color. | 443 |
| 5600-0488 | Warning/Scene light Whelen M9V2RC Super LED (PR) red with clear lenses. Location: [#LOC]. | 2266 |
| 5600-0490 | Warning light Whelen M9RC series Super LED (PR) red with clear lenses and diamond plate mounting boxes. Location: [#LOC]. | 1665 |
| 5600-0491 | Warning light Whelen Micron Super LED (PR) split red/clear. Surface mounted chrome bezel with weatherproof connector. Location: [#LOC]. | 617 |
| 5600-0492 | Warning light Whelen Micron Super LED (PR) split red/amber. Surface mounted chrome bezel with weatherproof connector. Location: [#LOC]. | 617 |
| 5600-0493 | Mars 888 LED pedestal mounted traffic clearing light located one each side of cab outboard above the outer quad bezel on contoured pedestal brkt. Lens color: driver red officer clear. | 4065 |
| 5600-0494 | Whelen red TIR3 LED light heads (2). Grommet mount in running board below pump module offset forward. | 329 |
| 5600-0495 | Warning light Whelen 600 series Super LED (PR). Red driver amber officer surface mounted with weatherproof connector. Location: [#LOC]. | 688 |
| 5600-0496 | Warning light Whelen M9 series Super LED (PR) red driver blue officer. Location: [#LOC]. | 1556 |
| 5600-0497 | Diamond plate warning/scene light mounting box full compartment top depth (PR). Location: [#LOC]. | 465 |
| 5600-0498 | Painted smooth plate warning/scene light mounting box (two-tone if equipped). Location: [#LOC]. | 465 |
| 5600-0499 | Warning/ground and/or scene light Whelen M6V2R series Linear Super LED (PR) red. Location: [#LOC]. | 1634 |
| 5600-0500 | Warning light Whelen M6 series Super LED (PR) red/amber driver red/blue officer. Surface mounted with weatherproof connector. Location: [#LOC]. | 861 |
| 5600-0501 | Federal 10" Navigator LED beacons (PR) clear lenses with (2) red (1) red/amber LED reflectors. Location: [#LOC]. | 2219 |
| 5600-0502 | Warning light Federal Signal Micro Pulse model MPS1200U-RR red LED w/ bezel (PR). Location: [#LOC]. | 518 |
| 5600-0503 | Light Whelen PS strip LED (PR) blue driver red officer with clear lenses. Location: [#LOC]. | 611 |

| Item No. | Description | |
|---|---|---|
| 5600-0504 | Warning/ground light Whelen M6V2 series Linear Super LED (4); (2) red (2) amber alternating. Wired through lower level warning scene lights wired through park brake and reverse. Location: center rear of body above B1. | 3267 |
| 5600-0505 | Hazard (park brake set) light 2" amber LED. Location: [#LOC]. | 41 |
| 5600-0506 | Warning light Whelen M9 series Super LED (PR) red officer amber driver with clear lenses. Location: [#LOC]. | 1556 |
| 5600-0507 | Light Whelen model PSB00FCR LED (PR) blue with clear lens. Location: [#LOC]. | 726 |
| 5600-0509 | Warning light Whelen M2 Super LED warning lights. Includes (2) blue M2B LED light heads w/chrome flanges (if applicable). Location: [#LOC]. | 626 |
| 5600-0510 | Warning light Whelen Rota-Beam series model 6RB Super LED (PR) with clear lenses; driver blue officer red. Location: [#LOC]. | 1097 |
| 5600-0511 | Federal Signal Vision LED rotating beacons model VSLR with driver red dome/rear facing IPX6 and officer amber dome/ rear facing IPX6 LED warning lights. Location: [#LOC]. | 2658 |
| 5600-0512 | Warning light Whelen M6 series Linear Super LED (PR) red driver amber officer. Location: [#LOC]. | 785 |
| 5600-0513 | Warning light Whelen TIR6/LIN3 rear upper level package. Includes (4) red rear facing up high TIR6 with clear lenses and (1) red LIN3 with clear lenses each side side facing up high and rearward (as applicable) of body. Requires supplimental side facing lights for NFPA compliancy. | 1455 |
| 5600-0514 | Warning light Whelen M-Series Super LED model M9M (PR) blue/amber with clear lenses. Surface mounted with weatherproof connector. Location: [#LOC]. | 1556 |
| 5600-0516 | Federal NVG10 Navigator LED warning light (PR) with [#COL] lenses. Location: [#LOC]. | 1759 |
| 5600-0517 | Federal NVG10 Navigator LED warning light (PR) with clear lenses and [#COL] LED reflectors. Location: [#LOC]. | 1759 |
| 5600-0518 | Power Arc (PR) Model LED210 blue with clear lenses. Location: [#LOC]. | 1425 |
| 5600-0519 | Power Arc (PR) Model LED210 driver red officer blue with clear lenses. Location: [#LOC]. | 1425 |
| 5600-0520 | Power Arc (PR) Model LED180 red with clear lenses. Location: [#LOC]. | 1425 |
| 5600-0521 | Warning light Power Arc model M90FK-RC LED (PR). Color: Red with clear lens. Location: [#LOC]. | 1137 |
| 5600-0522 | Warning light Whelen Rota-Beam series model 6RB Super LED (PR) driver red officer blue. Location: [#LOC]. | 1097 |
| 5600-0524 | Power Arc warning light LED (PR) Model P14SM. Color: Red with clear lenses. Location: [#LOC]. | 1054 |
| 5600-0525 | Power Arc warning light LED (PR) Model P14SM. Color: Blue with clear lenses. Location: [#LOC]. | 1054 |
| 5600-0526 | Warning light Federal Signal QL64XF LED (PR) red with diamond plate mounting boxes. Location: [#LOC]. | 887 |
| 5600-0527 | Warning light Whelen M6 series Linear Super LED (PR) blue driver red officer. Location: [#LOC]. | 785 |
| 5600-0528 | Power Arc warning light LED (PR) Model P14SM with diamond plate box. Color: (1) red (1) blue with clear lenses. Location: red officer side upper forward body corner blue officer side upper rearward body corner. | 1226 |
| 5600-0529 | Power Arc warning light LED (PR) Model P6NT. Color: Red driver blue officer with clear lenses. Location: [#LOC]. | 760 |
| 5600-0530 | Power Arc warning light LED (PR) Model P6NT-BC. Color: Blue with clear lenses. Location:[#LOC]. | 760 |
| 5600-0531 | Power Arc warning light LED (PR) Model MP13SM. Color: white/blue driver white/red officer with clear lenses. Location: (1) each side front bumper inboard of frame rails. | 1276 |
| 5600-0532 | Warning light Whelen M6RC series Super LED (PR) red with clear lens and diamond plate mounting box. Location: [#LOC]. | 922 |
| 5600-0533 | Warning light Whelen Rota-Beam series model 6RBRC Super LED (PR) red with clear lenses and diamond plate mounting boxes. Location: [#LOC]. | 1269 |
| 5600-0534 | Warning light Whelen 500 series split TIR6 Super LED (PR) blue/amber driver red/amber officer. Surface mounted 5TSMAC bezel with weatherproof connector. Location: [#LOC]. | 665 |
| 5600-0535 | Warning light Whelen 900 series split Super LED (PR) driver red/amber oifficer blue/amber with clear lenses. Location: [#LOC] | 1350 |
| **MISC EQUIPMENT** | | |
| 7000-0003 | Akron Brass stacked tips w/stream shaper. Stream Shaper 3485 & Stacked Tips style 3499. | 692 |
| 7200-0000 | Adapter Chrome 3"MNST x 2.5"FNST with Plug | 232 |
| 7200-0001 | Adapter Chrome 3"FNST x 2.5"MNST with Cap. | 267 |
| 7200-0005 | Chrome Swivel Connector 6"FNST x 4.5"FNST Long Handle | 506 |
| 7200-0006 | Discharge Adapter 2.5"FNST x 2.5"MNST Spec with Cap - Special adapter with specified thread. | 164 |
| 7200-0007 | Adapter 2.5"MNST x 2.5"FNST Spec with Plug - Special adapter with specified thread. | 204 |
| 7200-0008 | Adapter Wye 2.5"FNST x 1.5"MNST. | 639 |
| 7200-0009 | Adapter Wye 4"FNST x (2) 2.5" FNST | 819 |
| 7200-0010 | Adapter 2.5" FNST x 2.5" F British Instantaneous. | 232 |
| 7200-0011 | Adapter 2.5" MSNT x 2.5" M British Instantaneous. | 174 |
| 7200-0013 | Adapter Collector 6"FNST x (3) 2.5"M British Instantaneous | 1041 |
| 7200-0014 | Adapter 2.5"FNST x 4" Storz | 392 |
| 7200-0015 | Adapter 3"FNST x 4" Storz with cap. | 412 |
| 7200-0016 | Adapter 3"FNST x 5" Storz and insert cap. | 504 |
| 7200-0017 | Swivel connector 5"FNST x 4" Storz with tethered Cap. | 482 |
| 7200-0018 | Swivel Connector 4" FNST x 4" Storz with Tethered Cap. | 364 |

| Item No. | Description | |
|---|---|---|
| 7200-0019 | Swivel connector 4"FNST x 5" Storz with tethered cap. | 458 |
| 7200-0020 | Swivel connector 5"FNST x 5" Storz with tethered cap. | 553 |
| 7200-0021 | Swivel Connector 6" FNST x 4" Storz with Tethered Cap. | 528 |
| 7200-0022 | Swivel Connector 6" FNST x 5" Storz with Tethered Cap. | 571 |
| 7200-0023 | Swivel Connector 3" FNST x 4" Storz 30 Degree Elbow with Tethered Cap. | 559 |
| 7200-0024 | Swivel Connector 3"FNST x 5" Storz 30 Deg Elbow with Tethered Cap. | 696 |
| 7200-0025 | Swivel Connector 4"FNST x 4" Storz 30 Deg Elbow with Tethered Cap. | 381 |
| 7200-0026 | Swivel Connector 4" FNST x 5" Storz 30 Deg Elbow with Tethered Cap. | 468 |
| 7200-0027 | Adapter 2.5"MNST x 2.5" Storz with 30 degree droop and insert cap. | 177 |
| 7200-0028 | Adapter 5" FNST x 5" Storz 30 degree with tethered cap. | 310 |
| 7200-0030 | Adapter 5" FNPT X 6" MNST Chrome. | 284 |
| 7200-0031 | 1.5" Chrome Cap w/Chain. | 21 |
| 7200-0032 | Adapter 2.5"FNST x 2.5" Storz. Includes cap and connector. | 175 |
| 7200-0035 | Adaptor 30 degree for rear 2.5" discharge. To be 2.5" FNST x 2.5" MNST. Ship loose. | 224 |
| 7200-0036 | Intake 6" Elkhart Elk-O-Lite 9786 Piston Valve. Ship Loose. | 2322 |
| 7200-0040 | Chrome adapter for 2.5" discharge. Includes 2.5" FNST x 1.5" IPT thread with cap. | 79 |
| 7200-0043 | Intake 6" Northline FSGR Piston Valve with intake Relief. ship loose | 1349 |
| 7200-0044 | Adapter.75 FGHT (garden hose) x 1.5" Storz | 100 |
| 7200-0045 | Intake gated relief valve. 6"FNST x 6"MNST. | 1175 |
| 7200-0046 | Swivel Pyrolite connector 2.5"FNST x 2.5" FNST locker lug. | 113 |
| 7200-0047 | Adapter Pyrolite 2.5"MNST x 2.5"MNST. | 63 |
| 7200-0054 | Adapter wye suction 6"FNST x (3) 2.5" FNST | 2003 |
| 7200-0058 | Adapter 2.5FNST x 2.5M (3.232x5Tip) with Cap | 215 |
| 7200-0059 | Adapter 2.5MNST x 2.5F Swivel (3.232x5Tip) with Plug | 223 |
| 7200-0062 | Adapter 4.5" FNST x 5" Storz. | 267 |
| 7200-0063 | Chrome adaptor for 2.5" discharge. Includes 2.5" FCSA x 1.5" NPSH threads with caps. | 118 |
| 7200-0071 | Adapter 1.5" FNST X 1.0" MNST w/Cap. | 99 |
| 7200-0074 | Swivel Connector 6"FNST x 5" Storz with 30 degree elbow and Tethered Cap | 574 |
| 7200-0076 | A 5" FNST x 4" Storz adapter with a 30 degree droop shall be shipped loose. | 205 |
| 7200-0086 | Adapter Chrome 3"FNST x 2.5"MNST | 256 |
| 7200-0090 | Adapter 2.5" female NST x 2.5" male British Instantaneous with cap | 128 |
| 7200-0095 | Akron 7980 Piston Intake Valve with 5" Storz outlet with cap. | 2553 |
| 7200-0098 | A 2.5" MNST x 5" FNST with 5" Plug Adapter. | 579 |
| 7200-0100 | Intake 6" Elkhart Elk-O-Lite 9786 Piston Valve. Ship Loose. The valve shall have an 6" female NST inlet and 5" swivel with a locking Stoz inlet | 2322 |
| 7200-0101 | Adapter 2.5FNST x 2.5M British Columbia Threads (BCT 3.00x8Tip) with Cap. | 208 |
| 7200-0102 | Adapter 2.5MNST x 2.5F Swivel British Columbia Threads (BCT 3.00x8TPI) with Plug | 413 |
| 7200-0103 | Inlet valve gated w/relief and elbow. 4"FNST x 4" STORZ and cap. (Kocheck Model 40K40204) | 2640 |
| 7200-0105 | Elkhart 18" Pipe Extender 8298EXw/8298. | 605 |
| 7200-0107 | Adapter aluminum 3"FNST x 2.5"MNST with Cap. | 267 |
| 7200-0108 | Adapter 4" FNST x 5" Storz. | 267 |
| 7200-0109 | Adapter 4.5" FNST X 4.5" MNST Chrome. | 390 |
| 7200-0111 | Adapter 2.5" female NST x 2.5" male Cleveland 3.078 x 8TPI with cap. | 210 |
| 7200-0112 | Adapter 2.5MNST x 2.5F Swivel (Cleveland 3.078 x 8TPI) with Plug | 431 |
| 7200-0115 | Swivel Connector 6"FNST x 4" Storz with 30 degree elbow and Tethered Cap | 574 |
| 7200-0116 | Adapter 2.5FNST x 2.5M Alberta Mutual Aid Threads (AMA 2.99x8Tip) | 127 |
| 7200-0117 | Swivel Connector 4"FNST x 6" MNST with 30 degree elbow and Cap. (Task Force Tip AH5NP) | 741 |
| 7200-0119 | Adapter Gated Wye with 2.5"FNST x (2) 1.5"MNPSH. | 1302 |
| 7200-0120 | Adapter 4" FNST X 3.5" MNST Chrome with cap. | 390 |
| 7300-0000 | Reducer Chrome 2.5"FNST x 1.5"MNST. | 82 |
| 7400-0000 | Chrome Intake elbow 2.5" MNST 45Deg | 215 |
| 7400-0001 | Chrome discharge elbow 3"FNST x 2.5"MNST 45 Deg | 286 |
| 7400-0002 | Chrome suction elbow 3"MNST x 2.5"FNST 45Deg | 286 |
| 7400-0003 | Chrome discharge elbow 3" 30 Degree. | 268 |
| 7400-0004 | Elbow 30 degree chrome swivel w/2.5"FNST x 2.5"MNST. | 82 |
| 7400-0005 | Chrome discharge elbow 2.5" 45 degree. | 215 |
| 7400-0008 | Chrome discharge elbow 3.0" FNST X 2.5" MCSA 30Deg chrome. | 293 |
| 7400-0010 | Chrome discharge elbow 4" 30 Degree. | 517 |
| 7400-0011 | Chrome Intake elbow 2.5" MNST x 2.5" Female 3.187 x 6 thread per inch with a 2.5" Male 3.187 x 6 thread per inch chrome plug with chain 45 Degree | 276 |
| 7400-0012 | Chrome discharge elbow 2.5" FNST x 2.5" Male 3.187 x 6 thread per inch with a 2.5" Female 3.187 x 6 thread per inch chrome rocker lug cap with chain 45 Degree. | 264 |
| 7400-0013 | Chrome discharge elbow 2.5" FNST x 2.5" Male 2.968 x 8 thread per inch with a 2.5" Female 2.968 x 8 thread per inch chrome rocker lug cap with chain 45 Degree. | 264 |
| 7400-0014 | Chrome discharge elbow 2.5" FNST x 2.5" Male 2.99 x 8 thread per inch with a 2.5" Female 2.99 x 8 thread per inch chrome rocker lug cap with chain 30 Degree. | 264 |

| Item No. | Description | |
|---|---|---|
| 7500-0000 | Ziamatic Air Pack Bracket (2PHS) Model #UN-6-30-2PHS. Shipped loose. | 351 |
| 7500-0001 | Ziamatic Air Pack Bracket (FPHS) Model #UN-6-30-3-FPHS. Shipped loose. | 356 |
| 7500-0002 | Universal air pack bottle bracket (EA). Shipped loose. | 171 |
| 7500-0004 | Bracket SCBA Lifeguard SmartDock Gen2 restraint system. Ship Loose. | 553 |
| 7550-0000 | ABC Extinguisher 10# w/Bracket. | 187 |
| 7550-0001 | ABC Extinguisher 12# w/Bracket | 294 |
| 7550-0002 | Extinguisher 15# CO2 w/bracket. | 496 |
| 7550-0003 | Extinguisher ABC 20# dry chemical w/bracket. Amerex model A411 | 274 |
| 7550-0004 | Extinguisher 2.5 Gallon Water Pressure w/Bracket. Amerex model A240 | 218 |
| 7550-0006 | ABC Extinguisher 20# ABC w/Bracket. Mount bracket to floor just inside the interior on the officer's side rear of 30# extinguisher. | 193 |
| 7600-0000 | Axe bracket - shipped loose. | 110 |
| 7600-0001 | Flat Head Axe 6 lb. | 70 |
| 7600-0002 | Pick Head Axe 6#. | 88 |
| 7600-0003 | Flat Head Axe 6# with Fiberglass Handle. | 151 |
| 7600-0004 | Pick Head Axe 6# with Fiberglass Handle. | 155 |
| 7600-0005 | Pike Pole Fiberglass 6'. | 158 |
| 7600-0006 | Pike Pole Fiberglass 8'. | 104 |
| 7600-0007 | Pike Pole Fiberglass 10'. | 200 |
| 7600-0008 | Pike Pole Fiberglass 12'. | 210 |
| 7600-0009 | Pike Pole Mounting Tube Style (Each) | 250 |
| 7600-0013 | Hooligan Tool 36". | 314 |
| 7600-0014 | Hooligan Tool Bracket (Each). | 184 |
| 7600-0015 | Wheel Chocks 32" NFPA Compliant - Pair of Zico AC-32. Up to 32" diameter Tires. Includes mounting bracket. | 525 |
| 7600-0016 | Wheel chocks 44" NFPA compliant pair (PR) of Zico SAC-44. Up to 44" diameter tires. Includes mounting brackets. | 591 |
| 7600-0017 | Collins CL-12-M hand held spotlight (shipped loose) | 522 |
| 7600-0018 | Adjustable combination hydrant spanner wrench. | 95 |
| 7600-0019 | Spanner Wrench (2) #10 with Holder. | 196 |
| 7600-0024 | Crow Bar 36". | 21 |
| 7600-0025 | Crow Bar 50". | 146 |
| 7600-0026 | Crow Bar 60". | 60 |
| 7600-0027 | Bracket for Crow Bar (Each) | 270 |
| 7600-0029 | Bolt Cutter 24". | 85 |
| 7600-0030 | Bolt Cutter 36". | 591 |
| 7600-0031 | Bracket for Cutter (Each) | 79 |
| 7600-0035 | Jack Hydraulic 5 Ton | 98 |
| 7600-0037 | Wheel Chocks Aluminum Zico AC-32 with mounting brackets. | 321 |
| 7600-0038 | Salvage Cover 12' x 18'. | 369 |
| 7600-0043 | First Aid Kit 24 Unit | 159 |
| 7600-0044 | First Aid Kit 36 Unit. | 309 |
| 7600-0053 | Wheel Chocks Alum HGS Heavy Includes Brackets. | 330 |
| 7600-0054 | Heavy Duty Tire Inflator with Gauge. Registers from 10 to 120 psi. | 172 |
| 7600-0057 | Wrench lug 2pc - lug wrench in two (2) pieces. Lug ends are 1.5" and 1.312" (BRT19951) with handle (BRT17899). | 130 |
| 7600-0058 | Wrench Hydrant w/2 Spanner Wrench Combination Set with Bracket. Meets FAA 10C Requirements for ARFF/Fire Trucks. | 149 |
| 7600-0060 | Saw Partner K12FD w/aluminum case. Meets FAA 10C requirements for ARFF/Fire trucks. Partner Model K12FD9514MK fire deptartment rescue saw 14". | 2939 |
| 7600-0080 | Sledge Hammer 8# with Fiberglass Handle | 63 |
| 7600-0081 | Hammer 4# w/fiberglass handle. | 42 |
| 7600-0084 | 12" Hacksaw with 12 Spare Blades. | 102 |
| 7600-0087 | Pike Pole Fiberglass 8 Ft w/ D-Handle. | 104 |
| 7600-0088 | Pike Pole 8 Ft. Firehooks Unlimited APH-8 pole. | 150 |
| 7600-0089 | Pike Pole 6 Ft. Firehooks Unlimited New York hook RH-6 pole. | 160 |
| 7600-0092 | Rubber mallet with fiberglass handle. | 53 |
| 7600-0093 | Wrench Storz adjustable with holder. | 116 |
| 7600-0094 | Craftsman Tool Set 283 piece set with Allen Key set and 4 Drawer Tool Box. | 886 |
| 7600-0095 | Pike Pole 6 Ft. Firehooks Unlimited APS-6 pole. | 180 |
| 7600-0099 | Pike Pole 8 Ft. Firehooks Unlimited APH-8 pole with D-Handle. | 172 |
| 7600-0100 | Pike Pole 10 Ft. Firehooks Unlimited APH-10 pole. | 218 |
| 7600-0101 | Pike Pole 12 Ft. Firehooks Unlimited APH-12 pole. | 240 |
| 7600-0102 | Pike Pole 6 Ft. Firehooks Unlimited APH-6 pole. | 135 |
| 7600-0103 | Pike Pole 6 Ft. Firehooks Unlimited fiberglass MPH-6 pole. Includes gas shut-off end. | 139 |
| 7600-0104 | Pike Pole 8 Ft. Firehooks Unlimited fiberglass MPH-8 pole. Includes gas shut-off end. | 163 |

| Item No. | Description | |
|---|---|---|
| 7600-0105 | Pike Pole 12 Ft. Firehooks Unlimited fiberglass MPH-12 pole. Includes gas shut-off end. | 248 |
| 7600-0108 | Pike Pole 6 Ft. Akron UT-6-DWH with drywall hook. | 151 |
| 7600-0109 | Pike Pole 10 Ft. Akron UT-10-DWH with drywall hook. | 165 |
| 7600-0110 | Pike Pole 4 Ft. Akron UT-4-D-DWH with drywall hook and D-handle. | 151 |
| 7600-0111 | Pike Pole 12 Ft. Akron PP-12 with USA standard hook. | 195 |
| 7600-0112 | Pike Pole 8 Ft. Akron PP-8 with USA standard hook. | 164 |
| 7600-0113 | Pike Pole 6 Ft. Akron PP-6 with USA standard hook. | 150 |
| 7600-0114 | Tire inflator large bore heavy duty includes gauge. Registers from 10 to 160 psi in 2 psi increments. | 119 |
| 7600-0115 | Pike Pole 8 Ft. Firehooks Unlimited New York hook RH-8 pole. | 167 |
| 7600-0116 | Pike Pole Fiberglass 6 Ft w/ D-Handle. | 122 |
| 7600-0117 | Pike Pole Fiberglass 12 Ft w/ D-Handle. | 150 |
| 7600-0118 | Pike Pole Fiberglass 4 Ft w/ D-Handle. | 116 |
| 7600-0120 | Pike Pole 8 Ft. Firehooks Unlimited New York hook RH-8 pole with steel shaft and pry end. | 167 |
| 7600-0121 | Axe Paratech Topcut. | 160 |
| 7600-0122 | Spanner Wrench Akron SS-MP bracket with (4) Super Spanner wrenches. | 196 |
| 7600-0123 | 10 Ft. Firehooks Unlimited New York Roof Hook (RH-10) with Fiberglass pole and chisel end. | 231 |
| 7600-0124 | 8 Ft. Firehooks Unlimited New York Roof Hook (RH-8) with Fiberglass pole and chisel end. | 192 |
| 7600-0125 | 6 Ft. Firehooks Unlimited New York Roof Hook (RH-6) with Fiberglass pole and chisel end. | 173 |
| 7700-0004 | Hard suction hose 6" X 10' with Pyrolite couplings. | 1189 |
| 7700-0006 | Booster hose 100' long 1" 800 PSI. | 744 |
| 7700-0007 | Akron 1" 60gpm Pistol Grip Assault Nozzle | 804 |
| 7700-0010 | Hard Suction Hose 3" X 10' with Pyrolite Couplings. | 315 |
| 7700-0011 | Hard Suction Hose 4.5" X 10' with Pyrolite Couplings. | 725 |
| 7700-0012 | Hard suction hose 5" X 10' with Pyrolite couplings. | 872 |
| 7700-0013 | Hard Suction Hose 5" X 10' with Chrome Couplings | 1026 |
| 7700-0015 | Hard Suction Hose 6" X 10' with Chrome Couplings. | 1428 |
| 7700-0017 | Soft Suction Hose 6" x 4.5" with Long Handle Chrome Couplings. | 1771 |
| 7700-0018 | Soft Suction Hose 6" X 15' with Long Handle Chrome Couplings. | 1524 |
| 7700-0019 | Booster Hose 50' Length 75" 800PSI | 450 |
| 7700-0020 | Booster hose 100' length of 3/4" 800 PSI. | 651 |
| 7700-0021 | Booster Hose 50' Length 1" 800 PSI. | 504 |
| 7700-0022 | Booster Hose 50' x 1" Reeltex (Each) Niedner Reeltex fabric booster hose with couplings. | 504 |
| 7700-0023 | Booster Hose 100' x 1" Reeltex (Each) Niedner Reeltex fabric booster hose with couplings. | 775 |
| 7700-0025 | Hose double jacket 50' length 1.5" 600 PSI. | 237 |
| 7700-0026 | Double Jacket Hose 50' Length 2.5" 600PSI | 369 |
| 7700-0027 | Double Jacket Hose 50' Length 3" 600PSI | 463 |
| 7700-0028 | Elkhart 1" Pistol Grip Nozzle | 893 |
| 7700-0029 | Akron 1" Pistol Grip Assault Nozzle | 763 |
| 7700-0030 | Akron 1.5" Assault Nozzle | 825 |
| 7700-0031 | Nozzle Akron 1.5" pistol grip - 95 gpm. | 895 |
| 7700-0050 | Elkhart 282A Elk-O-Lite Stream Shaper | 210 |
| 7700-0051 | Elkhart ST-194 Elk-O-Lite Stacked Tips. | 541 |
| 7700-0052 | Elkhart SM-1250 Select-O-Matic Master Stream Nozzle | 1284 |
| 7700-0053 | PVC suction hose 6" X 10' with Pyrolite couplings. | 1393 |
| 7700-0058 | Akron Apollo (3433) High Rise Monitor. Include a dual inlet ground base lift off and direct mount base. | 4056 |
| 7700-0060 | Akron Quad Stacked Deluge Tips (2499). For use with Akron monitors. Ship Loose. | 522 |
| 7700-0061 | Akron Turbomaster Nozzle (1755). Ship Loose. | 1568 |
| 7700-0064 | Booster Hose 100' x 1.5" Reeltex (Each) Niedner Reeltex fabric booster hose with couplings. | 795 |
| 7700-0065 | Nozzle Akron 5160 Manual Akromatic | 1158 |
| 7700-0066 | Nozzle 1.5 20-95gpm TFT NH Threads Pistol Grip | 366 |
| 7700-0073 | Akron Monitor Apollo 3423 portable. | 4143 |
| 7700-0074 | Nozzle 1.5" Turbojet high pressure | 456 |
| 7700-0076 | Booster Hose 1 inch x 200 feet with 800 psi working pressure | 821 |
| 7700-0079 | TFT 3.5" Stacked Deluge Tips YST-4NN. For use with TFT Monitors. Ship Loose. | 841 |
| 7700-0084 | Hard Suction Hose Rack 6" Hose (Each). | 424 |
| 7700-0097 | Soft Suction Hose 20ft 5" with 4.5" long handle female coupler on one end and a 4.5" long handle male coupler on the other end. | 1771 |
| 7700-0098 | Hard Suction Hose 6" x 6' with Pyrolite Couplings | 967 |
| 7700-0103 | Nozzle Elkhart SM-3FG Pistol Grip 1" hose reel. | 784 |
| 7700-0104 | Booster Hose 100' x 1" Niedner Hotstop fabric booster hose with couplings. | 701 |
| 7700-0106 | Kochek PVC Hard Suction Hose 6" x 8' with Pyrolite Couplings. | 914 |
| 7700-0107 | Kochek PVC Hard Suction Hose 4" x 10' with Storz Pyrolite Couplings. | 603 |
| 7700-0108 | Hose booster rubber 1" X100' Red in color with couplings Darley part number AC696. | 725 |
| 7700-0114 | Hard suction hose 6" x 8' with Pyrolite couplings. | 964 |
| 7700-0115 | Kochek PVC Hard Suction Hose 6" x 10' with Pyrolite Couplings. | 991 |

| Item No. | Description | |
|---|---|---|
| 7700-0116 | 3" Double Jacket Hose with 2.5" couplings 50' Length 600PSI | 463 |
| 7700-0117 | Hose single jacket 50' length 1.5 | 236 |
| 7700-0118 | Akron Brass stacked tips w/stream shaper. Base style 3485 & Stacked Tips style 2499. | 691 |
| 7700-0119 | Soft Suction Hose 20ft 5" with 6" long handle female swivel coupler on one end and a 4.5" long handle female swivel coupler on the other end. | 1770 |
| 7700-0122 | TFT 1" Ultimatic Pistol Grip Nozzle 1. Flow range 10-125gpm. | 1012 |
| 7700-0126 | Hose PVC Suction Hose 6" x 12' with Action Pyrolite Couplings. | 1302 |
| 7800-0000 | Alco-Lite 8' Folding Ladder without shoes. | 348 |
| 7800-0002 | Alco-Lite FL-10 10' folding ladder without shoes. | 291 |
| 7800-0003 | 10' folding Duo-Safety 585-A ladder. | 454 |
| 7800-0004 | Aluminum Cast Bracket for Duo Safety Folding Ladder - For 8' or 10' | 482 |
| 7800-0006 | Alco-Lite PRL-12 roof ladder. | 463 |
| 7800-0007 | Alco-Lite PRL-14' roof ladder. | 494 |
| 7800-0008 | 14' roof ladder Duo-Safety 775-A. | 683 |
| 7800-0009 | Duo-Safety 16' 875-A roof ladder. | 527 |
| 7800-0010 | Alco-Lite PRL-16' roof ladder. | 593 |
| 7800-0013 | Alco-Lite AEL-12 Attic Extension Ladder | 615 |
| 7800-0014 | Alco-Lite PEL-16 Extension Ladder | 801 |
| 7800-0016 | Alco-Lite PEL-24' 2-section extension ladder. | 1008 |
| 7800-0017 | Alco-Lite PEL3-24 extension ladder. | 1453 |
| 7800-0018 | Extension ladder Duo-Safety 900-A 24' 2-section. | 1084 |
| 7800-0019 | Vertical Ladder Bracket | 513 |
| 7800-0020 | Adjustable Track for Ladder Bracket | 270 |
| 7800-0021 | Alco-Lite PEL-28' extension ladder. | 1309 |
| 7800-0022 | Alco-Lite PEL-30 Extension Ladder | 1409 |
| 7800-0023 | Alco-Lite PEL3-35' 3-section extension ladder. | 1781 |
| 7800-0024 | Alco-Lite PEL-35' extension ladder. | 1625 |
| 7800-0025 | Duo-Safety 1225-A 35' 3-section extension ladder. | 1805 |
| 7800-0027 | Little Giant model 17 ladder. | 827 |
| 7800-0028 | Alco-Lite PEL-14 14' 2-Section Extension Ladder. | 775 |
| 7800-0031 | Little Giant Model 22 ladder. | 783 |
| 7800-0032 | Alco-Lite FL-10 10' folding ladder w/safety shoes. | 291 |
| 7800-0033 | Duo-Safety 20' 2-section extension ladder 900-A. | 1101 |
| 7800-0037 | Ladder Extension Duo-Safety 3-Section 35 Foot Model 1225-A with a Wellington Puritan #G5732S0600K02 Halyard. | 1740 |
| 7800-0039 | Duo-Safety 1225-A 30' 3 Section Extension Ladder | 1655 |
| 7800-0040 | Alco-Lite PEL3-28 Extension Ladder | 1535 |
| 7800-0041 | Duo-Safety 1200-A 28' 2-section extension ladder. | 1329 |
| 7800-0043 | Duo-Safety 12' 775-A roof ladder. | 455 |
| 7800-0044 | Alco-Lite PEL-12 Extension Ladder | 679 |
| 7800-0045 | Duo-Safety 1200-A 35' 2 Section Extension Ladder | 1671 |
| 7800-0047 | Duo-Safety 925-A 26' 3-section extension ladder. | 1203 |
| 7800-0053 | Alco-Lite AEL-14 Attic Extension Ladder. | 693 |
| 7800-0062 | Alco-Lite PRL-10 Roof Ladder. | 431 |
| 7800-0069 | Alco-Lite PEL3-35P Extension Ladder w/Stay Poles. | 1883 |
| 7800-0076 | Duo-Safety 1200-A 35' 2 Section Extension Ladder. Special custom length ladder 1" shorter than standard in closed position. | 1671 |
| 7800-0077 | Duo-Safety 925-A 22' 3 Section Extension Ladder | 1179 |
| 7800-0078 | Alco-Lite FL-10 10' folding ladder without shoes and handles. | 291 |
| 7800-0080 | Aluminum Cast Bracket for Alcolite Folding Ladder - For 8' or 10' | 482 |
| 7800-0082 | Alco-Lite FRL-14' roof ladder. | 601 |
| 7800-0083 | Alco-Lite FEL-24' 2-section extension ladder. | 1313 |
| 7800-0085 | 14' roof ladder Duo-Safety 775-DR. Includes folding steel roof hooks on both ends with prong feet. | 720 |
| 7800-0087 | Alco-Lite FEL3-35 3-section fiberglass extension ladder. | 1943 |
| 7800-0088 | 10' roof ladder Duo-Safety 775-DR. Includes folding steel roof hooks on both ends with prong feet. | 635 |
| 7800-0089 | Duo-Safety 16' roof ladder 875-DR. Includes folding steel roof hooks on both ends with prong feet. | 822 |
| 7800-0090 | Little Giant model 13 ladder. Classic style | 675 |
| 7800-0091 | 8' folding Duo-Safety 585-A ladder. | 342 |
| 7800-0092 | Duo-Safety 1225-A 28' 3-Section Extension Ladder | 1329 |
| 7800-0095 | Duo-Safety 20' roof ladder 875-DR. Includes folding steel roof hooks on both ends with prong feet. | 951 |
| 7900-0007 | Chrome Barrel Strainer 2.5" | 310 |
| 7900-0010 | Chrome Barrel Strainer 6" NST. | 387 |
| 7900-0011 | Strainer Bracket 6". | 121 |

| Item No. | Description | |
|---|---|---|
| 7900-0012 | Galvanized Strainer Basket 6" | 441 |
| 7900-0013 | Ramsey Portable Winch 5k | 1189 |
| 7900-0014 | DOT Required Drive Away Kit - Kit includes three (3) triangular warning reflectors with carrying case. This kit is for the end user and is to remain with the truck. | 34 |
| 7900-0016 | Ferno Washington Model 71Stokes | 1220 |
| 7900-0031 | Handheld flashlight orange Streamlight Litebox flashlight with vehicle mount system. | 186 |
| 7900-0033 | Medical Kit w/BLS | 410 |
| 7900-0041 | Ramsey QM9000 9000 lb. portable winch. | 1860 |
| 7900-0043 | Firecom UH-40 headset. | 499 |
| 7900-0045 | Poly Box 6" high x 8" wide x 22" deep. | 210 |
| 7900-0046 | Goodyear front spare tire assembly with aluminum wheel to match front tire / wheel specification. | 2290 |
| 7900-0047 | Goodyear rear spare tire assembly with aluminum wheel to match rear tire / wheel specification. | 1980 |
| 7900-0048 | Michelin front spare tire assembly with aluminum wheel to match front tire / wheel specification. | 2077 |
| 7900-0049 | Michelin rear spare tire assembly with aluminum wheel to match rear tire / wheel specification. | 1856 |
| 7900-0051 | Goodyear rear spare tire assembly with steel wheel to match rear tire specification. | 1340 |
| 7900-0052 | Michelin front spare tire assembly with steel wheel to match front tire specification. | 1567 |
| 7900-0053 | Michelin rear spare tire assembly with steel wheel to match rear tire specification. | 1200 |
| 7900-0054 | Handheld Flashlight Orange Streamlight Survivor LED flashlight with holder and AC/DC charger. Ship loose. | 191 |
| 7900-0056 | Akron discharge pipe (3488). Ship loose. | 467 |
| 7900-0057 | Intercom System Setcom Orange County Reference Quote in Truck File All Components are to be Shipped Loose for Customer Installation. | 6908 |
| 7900-0058 | Diagnostic Software Kit for S-60 Engine Allison Transmission and ABS | 8421 |
| 7900-0060 | Monitor Akron #3426 | 1489 |
| 7900-0061 | Firecom UH-10 headset. | 499 |
| 7900-0063 | Firecom UH-20 headset. | 499 |
| 7900-0100 | A 9000 lb Warn multi-mount (portable) electric reversible winch with 125' of 5/16'' galvanized aircraft type cable and a replaceable clevis hook shall be installed and shall be controlled with a 12' remote control switch. | 2031 |
| 7900-0101 | Medical glove box. Shipped loose. Includes slotted top for dispensing gloves without opening hinged lid. Box to be same color as interior of cab. Secure lid in closed position with small butterfly latch. | 287 |
| 7900-0102 | Manual cord reel for 200' of 10/3 wire and a 20amp twist lock connection. | 806 |
| 7900-0103 | 50 foot extension cord with Battery charger recept on one end. | 186 |
| 7900-0104 | Ramsey QM8000 8000 lb portable winch | 1769 |
| 7900-0106 | Fold down computer tray. | 749 |
| 7900-0107 | Ship spare tire(s) via common carrier to customer location. | 171 |
| 7900-0108 | Quartz light MagnaFire 750W/120V model KR-SB-836-TM-I with external mount tripod telepole. Shipped loose. | 1399 |
| 7900-0120 | HeartStart OnSite Automated External Defibrillator. Unmounted. | 2334 |
| 7900-0128 | Flashlight with LED bulb mounted charger. | 150 |
| 7900-0133 | Wabco diagnostic software - provided at delivery. | 130 |
| 7900-0135 | Vest traffic safety orange nylon mesh. | 17 |
| 7900-0143 | Monitor Akron 3416 Apollo Single Inlet Portable and Deck Monitor 4" Storz Ground Base and Truck mounting flange only. | 4150 |
| 7900-0144 | TFT XFC 52 Package Crossfire Monitor SAFE-TAK Storage Bracket MasterStream Quad Stack Tips Stream Straightener. | 5238 |
| 7900-0147 | Map pockets 14 gauge stainless steel (PR). Includes vinyl trim around top of opening and nylon strap with snap to retain contents. Ship loose | 419 |
| 7900-0150 | One (1) 24' two section fiberglass extension ladder shall be supplied. | 1092 |
| 7900-0154 | Map Box Rectangular Short. | 554 |
| 7900-0155 | Junkin model JSA-300PCW stokes basket. Ship loose. | 873 |
| 7900-0156 | Multiplex adapter kit. Includes 6' harness with 9 pin plug/Deutsch ends and a USB to CAN interface module. | 336 |
| 7900-0157 | Junction box Circle-D with four (4) 3-wire NEMA L5-20 110 volt 20 amp twist lock receptacles. Includes 3' pig tail with 20A TL connector. | 827 |
| 7900-0158 | Junction box Circle-D with (2) 15 amp straight blade and (2) 20 amp twist lock receptacles. Includes 3' pig tail with 20 amp twist lock connector. | 1045 |
| 7900-0159 | Junction box Circle-D with (2) 15 amp straight blade and (2) 20 amp twist lock receptacles. Includes 20 amp twist lock inlet connector. | 1045 |
| 7900-0166 | Computer Panasonic Toughbook 30. | 5620 |
| 7900-0167 | Junction box Circle-D with (1) 20 amp straight blade and (3) 20 amp twist lock receptacles. Includes 3' pig tail with 20 amp twist lock connector. | 1045 |
| 7900-0170 | Zico helmet holder model UHH-1 (EA). Ship loose. | 69 |
| 7900-0171 | Cummins Quick Check 5200 Kit. Ship loose. | 2049 |
| 7900-0172 | 28" orange traffic cone with (2) reflective stripes. | 63 |

| Item No. | Description | |
|---|---|---|
| 7900-0173 | Junction box Woodhead with four (4) NEMA L5-15 110 Volt 15 Amp twist lock receptacles. Includes 12" pig tail with 20A TL connector. | 1644 |
| 7900-0174 | Map Box with Angle Storage. Finish to match cab interior. Ship loose. | 554 |
| 7900-0175 | Map box suspended with officer's map storage without mounting angles. Finish to match cab interior. Ship loose. | 776 |
| 7900-0178 | Generator Honda 2KW model EU2000iA with 1.6KW continuous output. Shipped loose. | 1763 |
| 7900-0179 | Akron Apollo (3416) Ground Mount and truck mounting flange Pyrolite stream shaperand stacked tips base to have single 4" FNST inlet. | 4215 |
| 7900-0180 | Cascade model CT-PSS1 one piece tapered stainless steel Pro Series stokes basket. Ship loose. | 1418 |
| 7900-0181 | Removable Aluminum Speedlay Tray with slotted floor to prevent the accumulation of water and allow for ventilation of wet hose. This is an additional tray to be shipped loose with the truck. | 669 |
| 7900-0182 | Removable Poly Speedlay Tray(s). The floor of the tray(s) to be slotted to prevent the accumulation of water and allow for ventilation of wet hose. This is in addition to the standard speedlay trays and are to be shipped loose. | 612 |
| 7900-0183 | Sign plate smooth 30"x30" shipped loose. Color: Job Color | 267 |
| 7900-0193 | Junction box Circle-D 3-wire 110V with (2) 20 amp straight blade and (2) 30 amp twist lock receptacles. Includes 12" pig tail with 30 amp twist lock connector. | 1045 |
| 7900-0194 | Tags - Innovative Controls. (7) tags labeled as follows: (5) SCBA Cylinder (1) O2 Cylinder and (1) 5lb Dry Chem. | 112 |
| 7900-0197 | Map box suspended with drop-down doors. 34"W x 9.50"H x 12"D. Shipped loose. Map box to be Zolatone gray. | 643 |
| 7900-0203 | Junction box Circle-D with (3) NEMA 5-20 120V GFCI duplex and (1) NEMA L6-20 220V twist lock receptacle. Includes 3' pig tail with L14-30P TL connector. Shipped loose. | 1045 |
| 7900-0206 | Junction box Akron with (4) 5-15 120v 15 Amp duplex recepts. Includes 12" pigtail with Hubbel L5-20 connector. Ship loose. | 763 |
| 7900-0207 | FireCom wireless headset. One (1) model UHW-51 (intercom ordered separately). | 891 |
| 7900-0208 | FireCom wireless headset. One (1) model UHW-54 (intercom ordered separately). | 891 |
| 7900-0209 | FireCom slotted dome headset. One (1) model UH-51S (intercom ordered separately). | 568 |
| 7900-0210 | FireCom headset. One (1) model UH-51 (intercom ordered separately). | 568 |
| 7900-0211 | FireCom headset. One (1) model UH-52 (intercom ordered separately). | 568 |
| 7900-0212 | FireCom wireless headset. One (1) model UHW-52 (intercom ordered separately). | 891 |
| 7900-0214 | FireCom slotted dome headset for wireless intercom. One (1) model UH-51S and one (1) model BP5-10 plug in belt pack to provide wireless headset functionality (intercom ordered separately). | 1167 |
| 7900-0215 | FireCom headset. One (1) model UH-54 (intercom ordered separately). | 568 |
| 7900-0216 | Nederman exhaust transmitter. Shipped loose | 1001 |
| 7900-0217 | Wheel Chocks 32" NFPA Compliant - Pair of Zico AC-32. Up to 32" diameter tires. | 321 |
| 7900-0218 | Wheel chocks 44" NFPA complaint pair (PR) of Zico SAC-44. Up to 44" diameter tires. | 679 |
| 7900-0222 | Diagnostic software for Allison transmission. | 1279 |
| 7900-0223 | Front and rear wheel trim kit (ship loose). Includes Real Wheels stainless steel "Cover-Up" covers with E-ONE logo for front IFS and rear tandem axle. | 1266 |
| 7900-0224 | Light Fire Research Spectra LED 110V portable model SPA700-K20-703-ON. Location(s): shipped loose. | 2788 |
| 7900-0225 | Bostrom SecureAll mechanical air pack bottle bracket (EA) (included in loose equipment). | 574 |
| 7900-0226 | Junction box Akron with four (4) 3-wire Nema L5-20 110Volt 20 Amp twist lock receptacles. Includes 12" pigtail with L5-20 connector. Ship loose. | 763 |
| 7900-0228 | V-MUX Electrical system diagnostic kit. | 968 |
| 7900-0229 | Zinc Plated Strainer Basket 6" | 278 |
| 7900-0231 | Additional set of pump panel tags. | 213 |
| 7900-0232 | Hosebed divider(s) short. To run above enhanced extended body to the rear of hose bed approximately 17" long x 22.25" high. Divider(s) to be shipped as loose equipment. | 88 |
| 7900-0233 | Setcom headset. One (1) model CSB-900 radio transmit capable (intercom system ordered separately). | 563 |
| 7900-0234 | Setcom headset. One (1) model CSB-901 intercom only (intercom system ordered separately). | 563 |
| 7900-0235 | Setcom wireless headset with base. One (1) model CSB-900W3 radio transmit capable (intercom system ordered separately). | 1215 |
| 7900-0236 | Setcom wireless headset with base. One (1) model CSB-901W3 intercom only (intercom system ordered separately). | 1215 |
| 7900-0237 | Junction box with 2' pigtail. Daniel Woodhead with two (2) NEMA L5-20 110V 20A twist lock and two (2) NEMA 5-20 110V 20A duplex receptacles. Includes 2' pigtail wired direct with a male L5-20 plug. Shipped loose. | 1549 |
| 7900-0240 | Junction box Akron with two (2) 5-20 120v 20 Amp straight blade duplex receptacles and two (2) L5-20 120v 20 Amp twist lock receptacles. Each receptacle shall be equipped with individual 20A breakers a spring-loaded snap cover and marked in white lettering with that receptacles voltage and ampere rating. All electrical receptacles plugs and snap type weatherproof covers shall be UL Listed components. 12" Pigtail that includes wire mesh cord grip with a L14-20 connector. Ship loose. | 763 |

| Item No. | Description | |
|---|---|---|
| 7900-0242 | Junction box Circle-D with four (4) 3-wire Nema 5-20 110Volt 20 Amp duplex household receptacles. Includes 3' pig tail with 20A TL connector. | 827 |
| 7900-0243 | Exhaust end chrome plated. Due to high heat from current emission exhaust systems dis-coloring of exhaust end may occur after prolonged use. Ship Loose. | 292 |
| 7900-0244 | Removable Poly Speedlay Tray(s). The floor of the tray(s) to be slotted to prevent the accumulation of water and allow for ventilation of wet hose. Ship loose. | 612 |
| 7900-0245 | Junction box Circle-D with three (3) L5-20 120v 20 Amp twist lock receptacles and one (1) 5-20 120v 20 Amp straight blade duplex receptacle. A Circle-D model PF51G four outlet electrical junction box shall be provided and shall have an integral pilot light to indicate electrical current. Each receptacle shall be equipped with individual 20A breakers. 12" Pigtail with a L14-20 4 wire connector. Ship loose. | 1045 |
| 7900-0246 | Removable aluminum speedlay tray(s)for 1.75" DJ hose. The floor of the tray(s) to be slotted to prevent the accumulation of water and allow for ventilation of wet hose. This is in addition to the standard speedlay trays and are to be shipped loose. | 669 |
| 7900-0247 | Speedlay tray loose equipment - removable. Tray includes a 1.25" extruded alum handle low on each end of tray and slots down each side to facilitate lifting. The floor of the tray shall have poly slides and be slotted to prevent the accumulation of water and allow for ventilation of wet hose. | 668 |
| 7900-0248 | Pro-Link hand held diagnostic kit. Cummins engine. | 5338 |
| 7900-0250 | TFT XFC 52 Package Crossfire Monitor SAFE-TAK Storage Bracket MasterStream Quad Stack Tips Stream Straightener | 5238 |
| 7900-0253 | Junction box Circle-D with (2) 3-wire NEMA L5-20 110V 20A twist lock receptacles and (2) 3-wire NEMA 5-20 110V 20A household receptacles. Includes 3' pig tail with 20A TL connector. | 827 |
| 7900-0255 | Floodlight Whelen PFP2AC 110V powder coated black with external mount 50" tripod telepole. Requires 110V receptacle shipped loose. | 3579 |
| 7900-0257 | Soft Suction Hose 15ft 6" with 6" long handle female swivel coupler on one end and a 4.5" long handle female swivel coupler on the other end. | 1429 |
| 7900-0258 | Spotlight Optronics Blue Eye model KB4003 hand held. Ship loose. | 259 |
| 7900-0259 | Removable aluminum speedlay tray(s)for 1.75" DJ hose. Tray includes a 1.25" extruded alum handle low on each end of tray and slots down each side to facilitate lifting. The floor of the tray shall have poly slides and be slotted to prevent the accumulation of water and allow for ventilation of wet hose. This is in addition to the standard speedlay trays and are to be shipped loose. | 668 |
| 7900-0260 | Junction box Circle-D with (2) 15 amp straight blade and (2) 15 amp twist lock receptacles. Includes 3' pig tail with 20 amp twist lock connector. | 1045 |
| 7900-0262 | Additional set of cargo net covers for rear facing medical cabinet opening(s). | 231 |
| 7900-0263 | Storz 4" mount bracket to be located and mounted at final inspection. | 137 |
| 7900-0265 | 2100 Gallon Aluminum frame portable folding tank. FDTA 2100 H2 alum w/22 oz. sides and 32 oz. Ship with unit stored in storage tank rack. Color to be yellow. | 1931 |
| 7900-0266 | Cup holder / tray for engine cover painted to match cab interior. Approx 14" wide x 10" long with tapered front corners and cup holders at each rear corner. For use in Typhoon and CII with severe duty engine cover. Ship loose. | 456 |
| 7900-0273 | Junction box Circle-D with four (4) 3-wire NEMA L5-15 110 volt 15 amp twist lock receptacles. Includes 12" pig tail with 15A TL connector. | 827 |
| 7900-0274 | Junction box Circle-D with (2) 20 amp straight blade and (2) 20 amp twist lock receptacles. Includes 12" pig tail with 20 amp Daniel Woodhead twist lock connector. | 1045 |
| 7900-0275 | TFT AB3ST-NX Intake Valve 6"NST x 5" Storz With Cap | 2279 |
| 7900-0277 | Wheel chocks 44" NFPA compliant pair (PR) of Zico AC-44. Up to 44" diameter tires. | 591 |
| 7900-0283 | David Clark battery pack (4). | 357 |
| 7900-0285 | Junkin model JSA-200 stokes basket. Ship loose. | 1066 |
| 7900-0288 | Junction box Circle-D with (4) 3-wire NEMA 5-15 110V 15A household receptacles. Includes 3' pig tail with 20A straight blade connector. | 827 |
| 7900-0290 | Removable Aluminum Speedlay Tray with slotted floor to prevent the accumulation of water and allow for ventilation of wet hose. Includes vertical slotted hand hold cutouts on each end in place of extruded grab handle and no lip on either end to facilitate easy removal of hose. This tray is in addition to the standard and shall be shipped loose with the truck. | 668 |
| 7900-0291 | FireCom model UHW505 under helmet wireless radio transmit headset. | 1203 |
| 7900-0292 | Floor mounted Slide Master with tray. Model SMEX w/ 120% extension. 1/2 depth transverse or full depth on non transverse. Design for mounting in compartment L4 to be shipped loose with truck. | 1844 |
| 7900-0293 | Sight Level Tube for Water Tank Level. | 71 |
| 7900-0294 | Removable Aluminum Speedlay Tray(s) with slotted floor to prevent the accumulation of water and allow for ventilation of wet hose. Includes vertical slotted hand hold cutouts on each end to facilitate easy removal of the hose tray. This is in addition to the standard speedlay trays and are to be shipped loose. | 668 |
| 7900-0295 | FireCom model UHW503 under helmet wireless intercom only headset. | 1173 |

| Item No. | Description | |
|---|---|---|
| 7900-0298 | Junction box Akron with (2) 5-20 125v 20 Amp duplex recepts and (2) L5-20 125v 20 Amp twist lock recepts. Includes 12" pigtail with Daniel Woodhead L5-20 connector and rubber feet. Shipped loose. | 652 |
| 7900-0299 | TFT Crossfire model XFT-NJ monitor with master stream 1250 nozzle. Include truck mount adapter. | 5127 |
| 7950-0022 | Front axle wheel trim kit. Includes stainless steel lug nut covers (chrome plated plastic if applicable) and center cap with E-ONE logo. Note: Center cap will have an inspection port IPO a logo if equipped with Stemco oil seals. | 277 |
| 7950-0023 | Rear axle (single) wheel trim kit. Includes stainless steel lug nut covers (chrome plated plastic if applicable) and center cap with E-ONE logo. E-ONE custom chassis w/steel wheels will have chrome plated plastic lug covers. | 341 |
| **PAINT, STRIPING, LETTERING** | | |
| 8100-0070 | Paint valve ends job color. | 541 |
| 8100-0071 | Undercoating E-ONE. | 332 |
| 8100-0072 | Touch up paint (1) pint. Dupont paint job color. | 105 |
| 8100-0084 | All applicable pump/pre-connect application modules are to have a job color finish. Includes upper and lower pump modules crosswalk module and/or speedlay/pre-connect module (as applicable). Rear mounted body/pump module to be painted job color. | 691 |
| 8100-0088 | Painted trim stripe on chassis wheels (per axle). Color to be: [#COL]. | 202 |
| 8100-0092 | Paint entire rear of body job color. Stainless steel bodies only. | 2473 |
| 8100-0096 | Paint rear tow eye assemblies job color IPO black. | 314 |
| 8100-0097 | Paint the pump job color. | 660 |
| 8100-0100 | Special paint break. See sketch / drawing / photo in sales file. | 218 |
| 8100-0102 | Chassis axle ends to be painted job color. | 347 |
| 8100-0108 | Front wheels to be painted on the inboard side (same color as outboard side). | 356 |
| 8100-0109 | Rear wheels (4) to be painted on the inboard side (same color as outboard side). Includes outboard side of the inboard wheels. | 710 |
| 8100-0115 | Paint valve ends 767681EG Black. | 541 |
| 8100-0117 | Paint cab/body with approved metallic paint color. | 3122 |
| 8100-0168 | All rearward facing access door(s) and pump//bleeder panel(s) to be painted job color. | 1055 |
| 8100-0170 | Painted Stripe - 6" wide with "Z". Stripe straight on front sides and rear of cab and body. "Z" location to be specified by customer. Color: [#COL]. Location: [#LOC]. | 5082 |
| 8100-0171 | Paint Commercial Cab Special - DuPont Paint: Color: [#COL]. | 5666 |
| 8100-0172 | Paint body two tone color. Paint break will be just above door drip rail. DuPont paint. Color: [#COL]. | 2190 |
| 8100-0176 | Paint E-ONE chassis cab - Sikkens paint. Color: [#COL]. | 6320 |
| 8100-0177 | Paint cab Sikkens two-tone. Upper area of cab to be painted [#COL]. | 1424 |
| 8100-0178 | Paint Commercial Cab Special - Sikkens Paint: Color: [#COL]. | 5287 |
| 8100-0180 | Paint 2-Tone Special Commercial Chassis Cab - Sikkens Paint. | 2822 |
| 8100-0181 | Paint body two-tone color - Sikkens paint: Color: [#COL]. | 2190 |
| 8100-0182 | Paint Body - Small - For Pumpers Rear Mounts S/A Tankers/Wetsides and Rescues. Sikkens paint. Color: [#COL]. | 1946 |
| 8100-0183 | Paint Body - Large - For Aerials T/A Tankers/Wetsides Rear Mounts and Rescues. Sikkens paint. Color: [#COL]. | 4817 |
| 8100-0184 | Paint body stainless steel -Small. Sikkens paint. Color: [#COL]. | 5917 |
| 8100-0188 | Durabak coating for all cab and body handrails. | 1618 |
| 8100-0222 | Paint all roll up door header plate(s) job color. | 894 |
| 8100-0223 | The pump/ladder/hardsuction access door and recessed box for directional lightbar to be painted job color. | 350 |
| 8100-0225 | Paint the pump. Color: [#COL]. | 660 |
| 8100-0226 | Medical cabinet exterior roll-up door two-tone paint adjustment (EA). Includes dis-assembly/re-assembly of existing two-tone roll-up door to match cab paint break. | 526 |
| 8100-0227 | Standard paint process for the exterior of stainless steel bodies. Sikkens paint. Color: [#COL]. | 1946 |
| 8100-0228 | FRP painted exterior panels IPO standard paint process for stainless steel bodies. Available only on stainless steel pumper bodies that have roll-up doors. Provides a credit versus the standard painting process. Sikkens paint. Color: [#COL]. | -4187 |
| 8100-0233 | FRP painted exterior panels IPO standard paint process for stainless steel bodies. Available only on stainless steel rescue pumper bodies that have roll-up doors. Provides a credit versus the standard painting process. Sikkens paint. Color: [#COL]. | -4187 |
| 8100-0361 | Rear body surface to have a painted job color finish. Includes hinged doors that do not have discrete sales codes and removable panels. | 983 |
| 8100-0362 | Paint body two tone color. Paint break will be just above the body compartment top. Sikkens paint. Color: [#COL]. | 2190 |
| 8100-0372 | Paint cab two-tone with approved metallic flake paint color. | 781 |
| 8100-0375 | LizardSkin under cab insulation. Includes all exterior under cab surfaces exposed to interior crew compartment. | 3605 |
| 8100-0376 | Side facing extrusions of pump module to have swirled finished. | 197 |

| Item No. | Description | |
|---|---|---|
| 8100-0382 | Interior of front bumper trays and running board suction trays to be painted with black Durabak. Includes driver side officer side and center front bumper trays. Driver side and officer side running board suction trays. | 681 |
| 8100-0383 | Paint Newton Dump job color. | 588 |
| 8100-0388 | Chassis fuel tank to have undercoating applied prior to installation on frame. | 232 |
| 8100-0394 | Paint body two-tone color. Paint break will be just above the body compartment opening. Sikkens paint. Color: [#COL]. | 2190 |
| 8100-0398 | Paint swivel chute job color. | 730 |
| 8100-0401 | Paint front and rear axle hubs primary job color. | 1497 |
| 8100-0403 | Black Durabak coating on fuel tank. | 468 |
| 8100-0406 | Paint foam discharge and intake valves [#COL]. | 541 |
| 8100-0410 | Black Durabak coating on pump master drain bracket. | 55 |
| 8100-0412 | Zolatone finish gray in color for the upper pump module on the officer side where the E-ONE logo is mounted. | 211 |
| 8100-0426 | The driver and officer side roof top compartment interiors shall be painted Scorpion Black (smooth finish). | 659 |
| 8100-0431 | Brow light brackets (not housing) shall be painted [#COL]. This shall include forward rear and side facing if so equipped. | 197 |
| 8100-0436 | All applicable pump/pre-connect application modules are to have a job color finish. Paint the entire pump module inside and outside before loading onto the chassis. | 1379 |
| 8100-0439 | Painted crosswalk area to include all smooth plate and flat extruded surfaces exposed to the exterior forward and rearward of the crosswalk area. | 691 |
| 8100-0447 | FRP painted exterior panels IPO standard paint process for stainless steel bodies. Available only on stainless steel ValueONE bodies that have roll-up doors. Sikkens paint. Color: [#COL]. | 4104 |
| 8100-0448 | FRP painted exterior panels IPO standard paint process for stainless steel bodies. Available only on stainless steel tanker bodies that have roll-up doors. Provides a credit versus the standard painting process. Sikkens paint. Color: [#COL]. | -5493 |
| 8100-0449 | Rear inboard wheels (2) to be painted on the outboard side (same color as outer wheels). Allowing for wheels to be rotated on the rear axle. | 355 |
| 8100-0456 | Paint all applicable roll up door header plate(s) 2-tone job color. | 894 |
| 8100-0457 | Paint body two-tone color - Sikkens paint. Locate at the bottom of roll-up door header. Color: [#COL]. | 2190 |
| 8100-0458 | Special paint break body two-tone color - Sikkens paint: Color: [#COL]. See sketch / drawing / photo in sales file. | 2190 |
| 8100-0459 | The ground ladder brackets pike pole tubes and folding ladder trough to be painted job color. | 730 |
| 8100-0460 | Paint pump module two tone inline with body. | 246 |
| 8100-0468 | FRP painted exterior panels replacement set for stainless steel tanker bodies. Provides the standard painting process on the panels. Sikkens paint. Color: [#COL]. | 2678 |
| 8100-0472 | Paint intake valve ends 767681EG Black. (DO NOT PAINT PLUGS & SWIVELS) | 271 |
| 8100-0476 | Brackets painted Durabak black. Includes rear aerial style brackets rear camera cover. | 197 |
| 8100-0479 | SCBA doors on the rear body wheel well panels to be painted to match the body color. | 310 |
| 8100-0480 | Upper panels rearward of upper module storage compartment to be aluminum smooth plate painted job color. | 273 |
| 8100-0481 | Black Linex coating on top of the of standard diamond plate: Install on; Pump panel running boards body compartment tops enhanced extended compartment steps and rear tailboard. | 3785 |
| 8100-0488 | Paint rear tow eye assemblies yellow IPO black. | 314 |
| 8100-0498 | Paint upper FRP body panels two-tone color. Paint break will be just above the body compartment opening. Sikkens paint. Color: FLNA9550 Dark Grey Metallic | 592 |
| 8100-0499 | The hard suction storage tray(s) to be painted FLNA 9550 Dark Grey Metallic. | 210 |
| 8100-0506 | Paint all plumbing black. Pump valves and piping. | 1237 |
| 8100-0509 | Rear body FRP panels to be painted. | 271 |
| 8100-0515 | Paint front tow eye and rear frame mounted tow eye assemblies job color IPO black. | 386 |
| 8100-0518 | Paint all body compartment drip rails (hinged and/or rollup door) job color. | 894 |
| 8100-0521 | Paint Commercial OEM step package exposed hardware and hardware used to install trim package flat black. For use with coated trim packages (Line-X or similar) Prep and paint all exposed hardware or unpainted brackets on the trim package as well as the OEM step packaging on commercial chassis. To be painted as a final step after trim package is installed. | 228 |
| 8100-0522 | Paint front tow eye assemblies job color IPO black. | 224 |
| 8100-0523 | Paint rear 3-way receiver assembly job color IPO black. | 530 |
| 8100-0524 | Paint L1 roll up door header plate job color. | 128 |
| 8100-0526 | Paint front and rear axle hubs upper two-tone job color. | 1497 |
| 8100-0529 | Hose bed interior side walls and hose bed dividers to be painted to match the body color. | 729 |
| 8100-0534 | Paint all roll up door header plate(s) and side tracks job color. | 1116 |
| 8100-0536 | SCBA and fuel fill doors on the rear body wheel well panels to be painted to match the body color. | 310 |
| 8100-0538 | Paint break painted on chassis stripe - 1/2" Wide - [#COL].To be located 1" above existing paint break if so equipped or at the same approximate position (when there is not a paint break). | 1545 |

| Item No. | Description | |
|---|---|---|
| 8100-0539 | Paint break painted on body stripe - 1/2" Wide - [#COL].To be located 1" above existing paint break if so equipped or at the same approximate position (when there is not a paint break). | 2063 |
| 8100-0544 | Paint pump anode(s)exterior side as located in fire pump yellow for easy location identification during inspections. | 103 |
| 8100-0555 | Paint break painted on chassis stripe - 1/8" Wide - [#COL].To be located 1/4" below existing paint break chassis stripe if so equipped or at the same approximate position (when there is not a paint break). | 1545 |
| 8100-0556 | Paint Body - Small upper roof storage box. QTY (each) - For Mini Pumpers & Rescues. Does not include hardware. Sikkens paint. Color: [#COL]. | 940 |
| 8150-0012 | The interior of the backboard storage compartment to be painted OTO gray. Includes inside surfaces of backboard doors and upper cover plate. | 691 |
| 8150-0021 | The interior of the backboard storage compartment to be painted Zolatone gray. Includes inside surfaces of backboard doors and upper cover plate. | 691 |
| 8150-0032 | The body compartment interior (and mounted components if applicable package is selected) shall have gray finish. Note: Gray Line-X finish is prone to fading and might change color over time. | 918 |
| 8200-0000 | Scotchlite Letter (Each) - 3". Color [#COL]. | 12 |
| 8200-0001 | Scotchlite Letter (Each) - 6". Color [#COL]. | 14 |
| 8200-0002 | Scotchlite Letter (Each) - 9". Color [#COL]. | 15 |
| 8200-0003 | Scotchlite Letter (Each) - 12". Color [#COL]. | 15 |
| 8200-0004 | Scotchlite Letter (Each) - 15". Color [#COL]. | 17 |
| 8200-0005 | Scotchlite Letter (Each) - 18". Color [#COL]. | 19 |
| 8200-0006 | Maltese cross 12" (Pair). | 1277 |
| 8200-0007 | Sign Gold Letter (Each) - 3". | 16 |
| 8200-0008 | Sign Gold Letter (Each) - 6" | 22 |
| 8200-0009 | Sign Gold Letter (Each) - 9" | 34 |
| 8200-0010 | Sign Gold Letter (Each) - 12" | 34 |
| 8200-0011 | Scotchlite Letters (60) - 3". Color [#COL]. | 861 |
| 8200-0012 | Sign Gold Letters (60) - 3". | 1252 |
| 8200-0013 | Shade for lettering. | 6 |
| 8200-0014 | Sign "Stay Back 500FT" with black reflective lettering. Locate below rear of body. | 152 |
| 8200-0015 | White reflective tape on (2) outriggers. | 250 |
| 8200-0018 | Scotchlite Letters (90) - 3". Color [#COL]. | 1074 |
| 8200-0019 | Scotchlite Letters (120) - 3". Color [#COL]. | 1286 |
| 8200-0020 | Sign Gold Letters (90) - 3". | 1665 |
| 8200-0021 | Sign Gold Letters (120) - 3". | 2075 |
| 8200-0022 | Shade and outline for lettering. | 7 |
| 8200-0024 | Reflexite Letter (Each) - 18". [#COL] Reflexite letter(s) stitched to vinyl hosebed cover end flap. | 76 |
| 8200-0025 | Reflexite Letter (Each) - 6". [#COL] Reflexite letter(s) stitched to vinyl hosebed cover end flap. | 43 |
| 8200-0026 | Die cut letter in stripe (EA). | 28 |
| 8200-0027 | Scotchlite Letter (Each) - 5". Color [#COL]. | 14 |
| 8200-0028 | Sign Gold Letter (Each) - 5" | 22 |
| 8200-0029 | Scotchlite Letter (Each) - 10". Color [#COL]. | 16 |
| 8200-0030 | Sign Gold Letter (Each) - 10" | 34 |
| 8200-0031 | Scotchlite Letter (Each) - 30". Color [#COL]. | 23 |
| 8200-0032 | Scotchlite letter each 24" [#COL]. | 21 |
| 8200-0033 | Scotchlite letter (each) - 8". Color [#COL]. | 16 |
| 8200-0036 | Scotchlite Letter (Each) - 4". Color [#COL]. | 13 |
| 8200-0038 | Reflexite Letter (Each) - 12". [#COL] Reflexite letter(s) stitched to vinyl hose bed cover end flap. | 60 |
| 8200-0039 | Maltese Cross SignGold up to 18'' dia (PR) with new layout. | 1151 |
| 8200-0040 | Gold leaf letters (90) - 3". | 4155 |
| 8200-0042 | Gold leaf lettering and corner scroll package. Package contains (112) 3" gold leaf letters and (4) E-One style golf leaf corner scrolls. Corners scrolls located on forward upper corners of L3/R3 doors and rearward upper corners of L5/R5 doors. | 5178 |
| 8200-0044 | Reflexite Letter (Each) - 8". [#COL] Reflexite letter(s) stitched to vinyl hosebed cover end flap. | 50 |
| 8200-0045 | Gold leaf letters (120) - 3". | 4835 |
| 8200-0046 | Scotchlite Letter (Each) - 27". Color [#COL]. | 22 |
| 8200-0047 | Sign Gold Letter (Each) - 4" | 18 |
| 8200-0048 | Sign Gold Letters (120) - 4". | 2552 |
| 8200-0052 | Sign Gold Letter (Each) - 8" | 34 |
| 8200-0056 | Reflexite Letter (Each) - 8". White Reflexite letter(s) stitched to vinyl hosebed cover end flap and top of hosebed cover. Lettering Instructions: NMFD E-2 | 50 |
| 8200-0061 | Scotchlite Letter (Each) - 2". Color [#COL]. | 9 |
| 8200-0068 | Painted letter on cab grille (EA) - 18". Color: [#COL]. | 147 |
| 8200-0073 | Sign Gold Letter (Each) - 3". Sign Gold to be small turn style. | 19 |
| 8200-0074 | Maltese Cross SignGold up to 15" dia (PR) with new layout. | 926 |

| Item No. | Description | |
|---|---|---|
| 8200-0075 | Reflexite Letter (Each) - 10". [#COL] Reflexite letter(s) stitched to vinyl hose bed cover end flap. | 55 |
| 8200-0081 | Etched Vinyl Letter (Each) - 5" | 22 |
| 8200-0084 | Scotchlite Letter (Each) - 1". Color [#COL]. | 9 |
| 8200-0086 | Sign Gold Letter (Each) - 16". | 41 |
| 8200-0088 | Gold leaf letter (Each) - 4". | 78 |
| 8200-0089 | Gold leaf letters (EA) - 3". | 48 |
| 8200-0090 | Sign Silver Letter (Each) - 3" | 16 |
| 8200-0091 | Sign Silver Letter (Each) - 12" | 34 |
| 8200-0098 | Scotchlite letter each 20" [#COL]. | 20 |
| 8200-0100 | Sign Gold Letter (Each) - 2". | 16 |
| 8200-0107 | Sign Silver Letter (Each) - 6" | 22 |
| 8200-0108 | Install customer supplied lettering. Location: Front cab door. | 100 |
| 8300-0002 | NFPA Scotchlite Stripe - 4" wide and straight on front/sides of cab and sides/rear of body. Color: [#COL]. Location: [#LOC]. | 822 |
| 8300-0003 | NFPA Scotchlite Stripe - 6" wide and straight on front/sides of cab and sides/rear of body. Color: [#COL]. Location: [#LOC]. | 832 |
| 8300-0006 | NFPA Scotchlite Stripe - 6" wide with "Z". Stripe straight on front sides and rear of cab and body. "Z" location to be specified by customer. Color: [#COL]. Location: [#LOC]. | 1315 |
| 8300-0008 | NFPA Scotchlite Stripe - 5" wide with "S". Stripe straight on front sides and rear of cab and body. "S" location to be specified by customer. Color: [#COL]. Location: [#LOC]. | 1467 |
| 8300-0009 | NFPA Scotchlite Stripe - 5" wide with double "S". Stripe straight on front sides and rear of cab and body. Double "S" locations to be specified by customer. Color: [#COL]. Location: [#LOC]. | 1794 |
| 8300-0011 | Scotchlite stripe (PR) 1/2" located 1/2" above and below existing stripe. Color: [#COL]. | 612 |
| 8300-0012 | Scotchlite stripes (4) 1/2" located (2) above and (2) below existing stripe. Stripes to be spaced 1/2" apart. Color: [#COL]. | 1216 |
| 8300-0013 | NFPA Scotchlite Stripe - 2" and 4" wide with "Z". Stripe straight on front sides and rear of cab and body. "Z" location to be specified by customer. 2" above 4" with 1" gap between stripes. Color: [#COL]. Location: [#LOC]. | 1856 |
| 8300-0016 | Paint Break Sign Gold Chassis Stripe - 3/4" Wide - Black Gold Black. To be located above existing paint break. | 288 |
| 8300-0018 | Sign gold scroll for body door with shade (Ea). Location: [#LOC] | 203 |
| 8300-0019 | Sign gold scroll for body door (Ea). Location: [#LOC] | 66 |
| 8300-0024 | Red/White rubrail scotchlite insert. | 238 |
| 8300-0025 | 1/4" Pin stripe above and below existing Scotchlite stripe. Color: [#COL]. | 981 |
| 8300-0026 | Scotchlite stripe 1" located 1" above and below existing stripe. Color: [#COL]. | 734 |
| 8300-0027 | NFPA Scotchlite 4" wide hockey stripe straight across front and may contour as it transitions from cab to body on each side. Color: [#COL]. Location: [#LOC]. | 988 |
| 8300-0028 | NFPA Scotchlite 6" wide hockey stripe straight across front and may contour as it transitions from Cab to Body on each side. Color: [#COL]. Location: [#LOC]. | 998 |
| 8300-0030 | NFPA Scotchlite 10" wide hockey stripe straight across front and may contour as it transitions from Cab to Body on each side. Color: [#COL]. Location: [#LOC]. | 1332 |
| 8300-0032 | Chevron "A" style 4" Scotchlite striping on rear of body. Includes rear facing extrusions panels and doors inboard/outboard of the beavertails(if applicable). Colors to be [#COL]. | 3881 |
| 8300-0033 | NFPA Scotchlite Stripe - 8" wide and straight on front/sides of cab and sides/rear of body. Color: [#COL]. Location: [#LOC]. | 1027 |
| 8300-0034 | Scotchlite stripe 2" located 1" above existing stripe. Color: [#COL]. | 465 |
| 8300-0036 | NFPA Scotchlite Stripe - 8" wide with "S". Stripe straight on front sides and rear of cab and body. "S" location to be specified by customer. Color: [#COL]. Location: [#LOC]. | 1668 |
| 8300-0037 | Chevron "V" style 4" Scotchlite striping on rear of body. Includes rear facing extrusions panels and doors inboard/outboard of the beavertails(if applicable). Colors to be [#COL]. | 3881 |
| 8300-0038 | Scotchlite stripe 2" located 1" above and below existing stripe. Color: [#COL]. | 928 |
| 8300-0039 | Scotchlite stripe 1" located .5" above and below existing stripe. Color: [#COL]. | 775 |
| 8300-0040 | Signgold border .5" for logo. | 481 |
| 8300-0043 | NFPA Scotchlite double 2" wide hockey with 1" between stripes straight across front and may contour as it transitions from Cab to Body on each side. Color: [#COL]. Location: [#LOC]. | 2666 |
| 8300-0044 | Scotchlite stripe 1" located 1" above existing stripe. Color: [#COL]. | 387 |
| 8300-0045 | 1/4" pinstripe. Color: [#COL]. Location: At cab paint break | 215 |
| 8300-0046 | Scotchlite stripe (PR) 1/2" located directly above and below existing stripe. Color: [#COL]. | 770 |
| 8300-0048 | Paint break Scotchlite chassis stripe - 3/4" Wide - Black [#COL] Black. To be located above existing paint break. | 173 |
| 8300-0049 | Signgold body scroll package. (1) each upper corner L1 L3 R1 R3 and (1) each lower corner L2 R2 with connecting 3/4" signgold stripe. See photos on file with sales. | 2812 |
| 8300-0050 | Scotchlite stripe (PR) 1" located directly above and below existing stripe on satin roll-up doors only. Color: [#COL]. | 612 |

| Item No. | Description | |
|---|---|---|
| 8300-0051 | Scotchlite hockey stripe. Striping from bottom to top with no spacing between as follows: 1" white 1/4" blue 5.75" white 1/4" black 1/8" gold 1/4" black 1.375" white fading to blue at front cab corners 1/2" black 1/2" white. Location: bottom of stripes even with top of gravel shield; hockey at L1/R1. | 5821 |
| 8300-0052 | Chevron "V" style Scotchlite striping on rear of body outboard of beavertails (if equipped). Colors to be [#COL]. | 1151 |
| 8300-0053 | Signgold body scroll package. (1) front lower corner L2 and (1) rear lower corner L5 with connecting 3/4" signgold stripe. (4) R1 (each corner) with connecting 3/4" signgold stripe. (1) R2 lower front corner and (1) R5 lower rear corner with connecting 3/4" signgold stripe. | 1746 |
| 8300-0056 | Chevron "A" style 4" individual Scotchlite striping on front bumper. Colors to be [#COL]. | 1603 |
| 8300-0057 | Arched stripe 6"/2" on front cab door and blend into a straight body stripe. Includes stripe on front bumper. Color: [#COL] | 2666 |
| 8300-0058 | Chevron "V" style 4" Scotchlite striping on rear B1 compt door (3) stripes. Colors to be red/white/black pinstripe. | 1006 |
| 8300-0059 | NFPA Scotchlite Stripe - 10" wide and straight on front sides and rear of cab and body. Color: [#COL]. Location: [#LOC]. | 1353 |
| 8300-0060 | Scotchlite Stripe - 5" wide straight on front front of cab below windshield end at radius corners. Color: [#COL]. | 274 |
| 8300-0061 | Chevron "A" style 6" individual Scotchlite striping full width on rear of body. Includes rear facing extrusions panels and doors. Colors to be [#COL]. | 2048 |
| 8300-0062 | Chevron "A" style Scotchlite striping on rear of body outboard of beavertails (if equipped). Colors to be [#COL]. | 1151 |
| 8300-0066 | NFPA Scotchlite Stripe - 4" wide with "Z". Stripe straight on front sides and rear of cab and body. "Z" location to be specified by customer. Color: [#COL]. Location: [#LOC]. | 1304 |
| 8300-0067 | Chevron "A" style 4" Scotchlite striping on rear of body outside of beavertails. Colors to be [#COL]. | 1603 |
| 8300-0068 | NFPA Scotchlite Stripe - 10" wide with "S". Stripe straight on front sides and rear of cab and body. "S" location to be specified by customer. Color: [#COL]. Location: [#LOC]. | 4262 |
| 8300-0070 | Chevron "A" style 4" Scotchlite striping on rear of body between beavertails. Colors to be [#COL]. | 2209 |
| 8300-0072 | NFPA Scotchlite Stripe - 10" wide with "Z". Stripe straight on front sides and rear of cab and body. "Z" location to be specified by customer. Color: [#COL]. Location: [#LOC]. | 2245 |
| 8300-0075 | Sign gold scroll (4 ea side) for body with connecting .75" sign gold body stripe. See photo/drawing on file with sales. | 2455 |
| 8300-0076 | Chevron "A" style 4" Scotchlite striping on rear of body between beavertails; body panels and extrusions only (No doors). Colors to be [#COL]. | 1236 |
| 8300-0077 | Chevron "A" style Scotchlite striping on rear B1 compt door. Colors to be [#COL]. | 1944 |
| 8300-0078 | Chevron "A" style 4" 3M "Diamond Grade" striping on rear of body. Includes rear facing extrusions panels and doors inboard/outboard of the beavertails(if applicable). Colors to be [#COL]. | 4851 |
| 8300-0079 | Chevron "A" style 4" 3M "Diamond Grade" striping on rear pump panel/bleeder panel(s). Colors to be [#COL]. | 811 |
| 8300-0080 | Chevron "A" style 4" 3M "Diamond Grade" striping on front bumper. Colors to be [#COL]. | 2004 |
| 8300-0081 | Chevron "A" style 3M "Diamond Grade" striping on rear of body outboard of beavertails (if equipped). Colors to be [#COL]. | 1440 |
| 8300-0084 | Chevron "A" style 6" printed sheet Scotchlite striping full width on rear of body. Includes rear facing extrusions panels and doors. Colors to be [#COL]. | 1598 |
| 8300-0085 | Scotchlite stripe 1" located directly above and below existing stripe. Color: [#COL]. | 734 |
| 8300-0088 | NFPA Scotchlite Stripe - 4" wide and straight on sides and rear of body only. Color: [#COL]. Location: [#LOC]. | 906 |
| 8300-0089 | Gold leaf scroll and stripe package. Includes 3/4" stripes w/outline vertically on forward L1/R1 and rearward on L3/R3 body doors with connecting horizontal stripe on upper doors. Stripes to end with spear above scotchlite stripe. Custom scrolls over L2/R2 d-rings and front cab doors. 3/4" chassis stripe w/outline custom scrolls rearward and spear forward. See photos on file with sales. | 5875 |
| 8300-0090 | Scotchlite stripe 1.5" located directly above and below existing stripe. Color: [#COL]. | 777 |
| 8300-0091 | 1/4" Scotchlite pinstripe above and below existing stripe. Color: [#COL]. | 1119 |
| 8300-0093 | Chevron "A" style 6" printed sheet Scotchlite striping on front bumper. Colors to be [#COL]. | 659 |
| 8300-0094 | Chevron "A" style 4" Scotchlite striping on rear body panels only no extrusions. Colors to be [#COL]. | 2912 |
| 8300-0095 | Sign Gold cab and body stripe - 3/4" wide - Black Gold Black. To be located at lower cab and body sides and contour over wheel wells (if applicable). See addtional photos on file. | 1094 |
| 8300-0099 | Chevron "A" style 6" printed sheet Scotchlite striping on rear of body between beavertails. Colors to be [#COL]. | 1257 |
| 8300-0101 | Black rubrail scotchlite insert. | 238 |
| 8300-0102 | Gold leaf scroll and stripe package. Includes 1/2" stripes around perimeter of driver and officer side assemblies with (4) corner scrolls each side in the corners. See sketch on file. | 6522 |
| 8300-0103 | Chevron "A" style 6" Scotchlite striping on rear B1 compt door. Colors to be [#COL]. | 1944 |
| 8300-0104 | Chevron "V" style 3" Scotchlite striping on rear of body. Colors to be Red/White/Blue. | 3881 |

| Item No. | Description | |
|---|---|---|
| 8300-0109 | Chevron "A" style 6" 3M "Diamond Grade" striping on rear of body. Includes rear facing extrusions panels and doors inboard/outboard of the beavertails(if applicable). Colors to be [#COL]. | 4851 |
| 8300-0111 | Chevron "A" style 6" individual Scotchlite striping on rear of body except for the pump/ladder tunnel access door. Colors to be [#COL]. | 3881 |
| 8300-0112 | Chevron "A" style 6" Scotchlite striping on rear facing side of the slide out room. Colors to be [#COL]. | 1944 |
| 8300-0114 | Chevron "A" style 6" individual Scotchlite striping full width on rear of body. Includes rear facing compartment face extrusions panels and doors. Does not include center lower pump panel. Colors to be [#COL]. | 2048 |
| 8300-0115 | Chevron "A" style 6" printed pattern Scotchlite striping full width on rear of body. Includes rear facing compartment face extrusions panels and doors. Does not include center lower pump panel. Colors to be [#COL]. | 1598 |
| 8300-0116 | Chevron "A" style 6" printed pattern Scotchlite striping on the upper center pump/storage access. Colors to be [#COL]. | 500 |
| 8300-0117 | Chevron "A" style 6" individual Scotchlite striping on the upper center pump/storage access. Colors to be [#COL]. | 687 |
| 8300-0120 | Chevron "A" style 6" 3M "Diamond Grade" striping on front bumper. Colors to be [#COL]. | 2004 |
| 8300-0125 | Reflective [#COL] striping positioned in the "A" formation located in the lower door panel (EA). Location: [#LOC]. | 81 |
| 8300-0126 | Red/White scotchlite. Locate on front of roll-out tray(s) front lip of adjustable/fixed shelves and tool board(s) on outer vertical edge on both sides. | 479 |
| 8300-0142 | Chevron "A" style 6" individual Scotchlite striping on front bumper. Colors to be [#COL]. | 823 |
| 8300-0143 | NFPA Scotchlite Stripe - three stripes 3" wide with "Z" with 1" gap between stripes. Stripe straight on front sides and rear of cab and body. "Z" location to be specified by customer. Color: top stripe - Yellow middle stripe - White bottom stripe - Black. Location: top of bottom stripe flush with top of bumper and straight back. | 3476 |
| 8300-0144 | Chevron "A" style 6" 3M "Diamond Grade" striping full width on rear of body (does not include the B1 door). Includes rear facing extrusions panels and doors. Colors to be [#COL]. | 2040 |
| 8300-0145 | Chevron "A" style 6" 3M "Diamond Grade" striping on front bumper. Colors to be [#COL]. | 975 |
| 8300-0146 | Chevron "A" style 6" 3M "Diamond Grade" striping full width on rear of body. Includes rear facing extrusions panels and doors. Colors to be [#COL]. | 2690 |
| 8300-0147 | Sign Gold Stripe - 3/4" Wide - Black Gold Black. To be located above and below scotchlite stripe. | 2185 |
| 8300-0148 | Sign gold scroll (4 ea side) for body with connecting .75" sign gold body stripe and white painted pin stripe. | 3419 |
| 8300-0150 | Chevron "A" style 6" printed sheet Scotchlite striping on rear of body. Includes rear facing extrusions panels and doors inboard/outboard of the beavertails (if applicable). Colors to be [#COL]. | 1390 |
| 8300-0152 | Chevron "A" style 6" 3M "Diamond Grade" Scotchlite striping full width on rear of body. Includes rear facing compartment face extrusions panels and doors. Does not include center lower pump panel. Colors to be [#COL]. | 2690 |
| 8300-0153 | Chevron "A" style 6" 3M "Diamond Grade" Scotchlite striping on the upper center pump/storage access. Colors to be [#COL]. | 851 |
| 8300-0154 | Chevron "A" style 6" 3M "Diamond Grade" striping on rear of body. Includes rear facing extrusions panels and doors inboard of the beavertails(if applicable). Colors to be [#COL]. | 2353 |
| 8300-0155 | NFPA Scotchlite Stripe - 4" wide with ribbon style "Z". Stripe straight on front sides and rear of cab and body. "Z" location to be specified by customer. Color: [#COL]. Location: [#LOC]. | 1315 |
| 8300-0159 | Red/Yellow scotchlite. Locate on front of roll-out tray(s) front lip of adjustable/fixed shelves and tool board(s) on outer vertical edge on both sides. | 479 |
| 8300-0160 | Chevron "A" style 6" printed sheet Scotchlite striping on front and rear faces of overhead ladder rack. Colors to be [#COL]. | 466 |
| 8300-0161 | NFPA Scotchlite stripe. Pasco County double half "S" stripe with 1" black 1/2" white 4" red 1/2" white. See photos on file with sales. | 2406 |
| 8300-0162 | Scotchlite stripe 1" located 1" below existing stripe. Color: [#COL]. | 387 |
| 8300-0165 | Chevron "A" style 6" printed sheet Scotchlite striping on outer panel of beavertails. Colors to be [#COL]. | 495 |
| 8300-0167 | White Diamond Grade Scotchlite. Locate on front of roll-out tray(s) front lip of adjustable/fixed shelves and tool board(s) on outer vertical edge on both sides. | 479 |
| 8300-0169 | NFPA Scotchlite Stripe - 6" wide with "Z". Stripe straight on front sides and rear of cab and body. "Z" location to be specified by customer. Color: White on cab and body / Ruby Red on body doors. Location: bottom of stripe flush with top of bumper and straight back. | 1315 |
| 8300-0179 | Chevron "A" style 6" printed sheet Scotchlite striping on rear of body. Includes rear facing extrusions panels inboard/outboard of the beavertails (if applicable). Does not include the rear door(s). Colors to be Yellow/Red. | 1320 |
| 8300-0181 | Paint Break Sign Gold Chassis Stripe - 3/4" Wide - Black Gold Black. Sign Gold to be small turn style. To be located above existing paint break. | 576 |

| Item No. | Description | |
|---|---|---|
| 8300-0183 | NFPA Scotchlite Stripe - 1"/1"/.25"/4"/.25"/1"/1" wide with "Z". Stripe straight on front sides and rear of cab and body. "Z" location to be specified by customer. Lower portion of stripes will continue rearward after "Z". There will be a 1/4" gap between stripes. Color: Blue/White/Blue/White/Blue/White/Blue. Location: bottom of stripe flush with top of bumper and straight back. | 3723 |
| 8300-0186 | NFPA Scotchlite Stripe - 2" and 6" wide with "Z". Stripe straight on front sides and rear of cab and body. "Z" location to be specified by customer. 2" above 6" with 1" gap between stripes. 6" stripe to have a .25" outline above and below. Color: [#COL]. Location: [#LOC]. | 1856 |
| 8300-0189 | Scotchlite striping on front bumper 6". Color to be [#COL]. | 823 |
| 8300-0190 | Chevron "A" style 6" 3M "Diamond Grade" striping on rear of body (does not include the B1 door). Includes rear facing extrusions panels and doors inboard/outboard of the beavertails(if applicable). Colors to be [#COL]. | 2040 |
| 8300-0191 | Paint break Scotchlite chassis stripe - 1/4" Wide - [#COL]. To be located above existing paint break. | 534 |
| 8300-0192 | NFPA Scotchlite Stripe - 8" and 3" wide with "Z". Stripe straight on front sides and rear of cab and body. "Z" location to be specified by customer. 8" above 3" with 1.5" gap between stripes. Color: White. Location: Center of the 8" stripe centered with Quad bezel (in between upper and lower bezel) and straight back. | 2439 |
| 8300-0193 | Chevron "A" style 3M "Diamond Grade" Dots in 6" striping pattern on rear of body (does not include the B1 door). Includes rear facing extrusions panels and doors inboard of the beavertails (if applicable). Colors to be [#COL]. | 3040 |
| 8300-0194 | Install dealer supplied Scotchlite pinstripe above and below existing stripe. Color: Blue. | 601 |
| 8300-0195 | Sign gold .75" stripe and scroll package. Total of (5) scrolls for body (1) in each upper forward corner of L1R1L3 and upper rearward corner of L2R2 with connecting stripes side dump panels to have rearward vertical stripe the cab to have stripe contouring the wheel wells and around front of cab. All stripes to have red scotchlite pin stripe. | 4011 |
| 8300-0197 | Scotchlite stripe 1" located 1" down from top of stripe and 1" up from bottom of stripe (1"stripes on existing stripe). Color: [#COL]. | 775 |
| 8300-0198 | NFPA Scotchlite Stripe - 8" wide with "Z". Stripe straight on front sides and rear of cab and body. "Z" location to be specified by customer. Color: [#COL]. Location: [#LOC]. | 2439 |
| 8300-0199 | Sign Gold Body Stripe - 1" Wide - Black Gold Black located .5" above and below existing stripe. | 1451 |
| 8300-0200 | Scotchlite stripe 2" located 2" below existing stripe. Color: [#COL]. | 916 |
| 8300-0201 | Chevron "A" style 6" 3M "Diamond Grade" striping on ladder rack lowering arms. The Chevron shall be applied to the rear and forward arm surfaces only. Colors to be [#COL]. | 383 |
| 8300-0202 | Sign Gold Stripe - 1" Wide - Black Gold Black. To be located above and below scotchlite stripe. | 2048 |
| 8300-0205 | NFPA Scotchlite Stripe - 4" wide with double ribbon. Double ribbon locations to be specified by customer. Color: [#COL]. Location: [#LOC]. | 1794 |
| 8300-0206 | Red rubrail scotchlite insert. | 238 |
| 8300-0209 | NFPA Scotchlite Stripe - 10" wide with pin striping above and below. Pin striping thickness and spacing shall be as specified in shop order and straight on front sides and rear of cab and body. Color: [#COL]. Location: [#LOC]. | 1708 |
| 8300-0210 | Reflective tape. There will be reflective tape added to the front and both sides of all roll-out trays to aid in visibility. Tape will be [#COL] in color. | 1222 |
| 8300-0214 | Chevron "A" style 6" printed sheet Scotchlite striping stitched to vinyl hosebed cover end flap. Colors to be [#COL]. | 495 |
| 8300-0216 | Scotchlite 3" wide hockey stripe straight across front and may contour as it transitions from cab to body on each side. Color: [#COL]. Location: [#LOC]. | 988 |
| 8300-0217 | NFPA Scotchlite Stripe - 1" and 6" wide with "Z". Stripe straight on front sides and rear of cab and body. "Z" location to be specified by customer. 1" above 6" with 1" gap between stripes. 6" stripe to have a .25" outline above and below. Color: [#COL]. Location: [#LOC]. | 1856 |
| 8300-0218 | Two-tone vinyl custom scroll (4 ea side) for body. See photos on file with sales. | 844 |
| 8300-0219 | Sign Gold Body Stripe - 3/4" Wide - Gold with single Black pin stripe. Located above and below existing stripe. Top to bottom black pin stripe sign gold existing stripe sign gold black pin stripe. | 1294 |
| 8300-0220 | Paint Break Sign Gold Chassis Stripe - 1" Wide - Black pin stripe Sign Gold Black pin stripe. To be located above existing paint break if so equipped or at the same approximate position (when there is not a paint break). | 770 |
| 8300-0221 | Sign gold scroll (Ea). Scroll detail/definition shall be defined by sales administration and or shop order file. Location: [#LOC] | 66 |
| 8300-0222 | NFPA Scotchlite Stripe - 1" 4" and 1" wide with "Z". Stripe straight on front sides and rear of cab and body. "Z" location to be specified by customer. 1" above and below 4" with 1" gap between stripes. Color: [#COL]. Location: [#LOC]. | 1856 |
| 8300-0223 | NFPA Scotchlite Stripe - 6" wide with double pin stripe top and bottom. "Z" Stripe straight on front sides and rear of cab and body. "Z" location to be specified by customer. Stripe shall be a printed sheet laid out from top to bottom as 1/4" pin stripe 1/8" gap (wide stripe color) 1/8" pin stripe 6" wide stripe 1/8" pin stripe 1/8" gap (wide stripe color) 1/4" pin stripe. Color: [#COL]. Location: [#LOC]. | 1856 |

| Item No. | Description | |
|---|---|---|
| 8300-0224 | Paint break Scotchlite chassis stripe - 1/2" Wide - [#COL]. To be located above existing paint break. | 612 |
| 8300-0225 | Paint break Scotchlite body stripe - 1/2" Wide - [#COL]. To be located above existing paint break. | 872 |
| 8300-0226 | Sign Gold Stripe - 3/4" Wide aerial sign plate - Gold with red pin stripe outline. The striping shall create a border around sign plate lettering. | 1294 |
| 8300-0227 | Diamond Grade reflective tape on (2) outriggers. Striping to alternate in an "A" pattern when viewed from the front or rear of the truck. Colors to be: [#COL]. | 791 |
| 8300-0228 | Printed reflective striping on (2) outriggers. Striping to alternate in an "A" pattern when viewed from the front or rear of the truck. Colors to be: [#COL]. | 352 |
| 8300-0229 | Scotchlite stripe 3" located 2" below existing stripe. Color: [#COL]. | 967 |
| 8300-0230 | Paint break painted on chassis stripe - 1/8" Wide - [#COL].To be located above existing paint break if so equipped or at the same approximate position (when there is not a paint break). | 1303 |
| 8300-0232 | NFPA Scotchlite Stripe - 2" and 4" wide with interlocking "Z". Stripe straight on front sides and rear of cab and body. "Z" location to be specified by customer. 2" above 4" with 1" gap between stripes. Color: [#COL]. Location: [#LOC]. | 1856 |
| 8300-0233 | NFPA Scotchlite Stripe - 1" 4" and 1" wide with triple interlocking "Z". Stripe straight on front sides and rear of cab and body. "Z" location to be specified by customer. 1" above and below 4" with 1" gap between stripes. Color: [#COL]. Location: [#LOC]. | 2715 |
| 8300-0234 | NFPA Scotchlite Stripe - 2" wide with "Heartbeat". Stripe straight on front sides and rear of cab and body. "heartbeat" location to be specified by customer. Color: [#COL]. Location: [#LOC]. | 1304 |
| 8300-0239 | Individual reflective tape on (2) outriggers. Striping to alternate in an "A" pattern when viewed from the front or rear of the truck. Colors to be: [#COL]. | 679 |
| 8300-0240 | Installation of a customer supplied stripe 16" in width shall be installed. The 16" stripe material shall be supplied by the customer Spectra Red in color and shall be reviewed by the Graphics personnel prior to order entry. The stripe shall align on the cab face as specified by customer and go straight back. | 1893 |
| 8300-0241 | Sign Gold stripe - 1/2" gold stripe with a 1/8" black outline on both sides - to be located above and below customer supplied stripe full length cab and body. | 1639 |
| 8300-0245 | 5/16" Pin stripe above and below existing Scotchlite stripe. Color: [#COL]. | 981 |
| 8300-0246 | Yellow M 983-71 rubrail scotchlite insert. | 531 |
| 8300-0247 | NFPA Scotchlite Stripe - 8" wide with overlaid striping. Overlaid striping width and spacing shall be as specified in shop order and straight on front sides and rear of cab and body. Color: [#COL]. Location: [#LOC]. | 1708 |
| 8300-0248 | Chevron "A" style 6" printed sheet Scotchlite striping on entire rear of body. Includes rear facing extrusions panels doors and rear driver and officer compartment face. Colors to be [#COL]. | 2077 |
| 8300-0251 | Scotchlite stripe 3" located 1" below existing stripe. Color: [#COL]. | 967 |
| 8300-0252 | NFPA Scotchlite hockey stripe. The stripe shall be 4"wide with a 3/4" gap above with a 2" wide stripe. The hockey stripe shall go straight across front and may contour as it transitions from cab to body on each side. Color: [#COL]. Location: [#LOC]. | 1093 |
| 8300-0254 | Sign gold scroll (2) at front cab corners below windshield with connecting .75" sign gold chassis stripe between scrolls and down to trim. | 391 |
| 8300-0255 | Chevron "A" style 6" 3M "Diamond Grade" Scotchlite striping on the rear side of the pull out tool board in L3. Colors to be Red/Fluorescent Yellow Green. | 387 |
| 8300-0257 | Scotchlite Stripe - approximately 6" wide straight on front of cab below windshield end at radius corners. Stripe to be in line (match) the top of the side stripes and trimmed as required at the front cab horizontal radius just above the bumper. Color: [#COL]. | 228 |
| 8300-0258 | Chevron "A" style 6" Blue 3M Scotchlite and 983-71 Yellow 3M "Diamond Grade" striping on rear of body. Includes rear facing extrusions panels and doors inboard/outboard of the beavertails (if applicable). | 2690 |
| 8300-0259 | Chevron "A" style 3M Diamond Grade striping in rubrail. Colors to be: [#COL] | 754 |
| 8300-0262 | NFPA Scotchlite Stripe - Triple: 2" wide yellow 1" wide white 2" wide yellow with 1" space between each stripe. Straight on front and sides of cab and body. Location: Top of stripe even with top of quad bezel. | 1316 |
| 8300-0264 | Paint break Scotchlite chassis stripe - 1" Wide - Red [#COL] Black. To be located above existing paint break. | 218 |
| 8300-0265 | NFPA Scotchlite Stripe - 6" wide with "Z". Stripe straight on front sides and rear of cab and body. "Z" location to be specified by customer. Color: White on cab and body / Ruby Red on body doors. Location: bottom of stripe flush with bottom of cab and straight back. | 1315 |
| 8300-0266 | Sign Gold Stripe - 1/2" Wide. To be located above and below scotchlite stripe. | 1539 |
| 8300-0267 | NFPA Scotchlite Stripe - 9.5" wide and straight on front sides and rear of cab and body. Color: [#COL]. Location: [#LOC]. | 1353 |
| 8300-0269 | NFPA Scotchlite stripe. Hillsborough County hockey stripe with 1" red 1/4" white and 6" black with (2) 1" lemon yellow stripes centered on top of black stripe with 1/4" gap. See photos on file with sales. | 4114 |
| 8300-0270 | Sign Gold Stripe - 1" Wide - Black Gold Black. To be located 1" above and below scotchlite stripe. | 1697 |

| Item No. | Description | |
|---|---|---|
| 8300-0271 | Chevron "A" style 6" 3M "Diamond Grade" striping on interior of front bumper lid. Colors to be [#COL]. | 975 |
| 8300-0272 | NFPA Scotchlite Stripe - 2" and 4" wide with interlocking hockey. Stripe straight on front sides and rear of cab and body. Hockey location to be specified by customer. 2" above 4" with 1" gap between stripes. Color: [#COL]. Location: [#LOC]. | 1856 |
| 8300-0273 | Chevron "A" style 6" Reflexite V98 striping on front bumper. Colors to be [#COL]. | 862 |
| 8300-0274 | Chevron "A" style 6" Reflexite V98 striping full width on rear of body. Includes rear facing extrusions panels and doors. Colors to be [#COL]. | 2287 |
| 8300-0275 | Chevron "A" style 6" Reflexite V98 striping full width on rear of body. Includes rear facing compartment face extrusions panels and doors. Does not include center lower pump panel. Colors to be [#COL]. | 2287 |
| 8300-0279 | Stripe cab lock bar. Color: White. | 85 |
| 8300-0280 | Chevron "A" style 6" Reflexite V98 striping on (2) outriggers. Striping to alternate in an "A" pattern when viewed from the front or rear of the truck. Colors to be: [#COL]. | 743 |
| 8300-0283 | NFPA Scotchlite hockey stripe special; includes 7/8" black 2-7/8" gold and 5-7/8" gold stripes. To be straight across front and may contour as it transitions from Cab to Body on each side. Color: black/gold. Location: center of stripe centered with headlight bezel and straight back. See photo on file with sales. | 1924 |
| 8300-0284 | NFPA Scotchlite Stripe - 6" wide with "triple hockey stripe". Stripe straight on front sides and rear of cab and body. "Hockey Stripe" location to be on compartment L1/R1. Color: White. Location: bottom of stripe flush with top of bumper and straight back. | 1315 |
| 8300-0286 | Chevron "A" style 6" Reflexite V98 striping full width on rear of body (does not include the B1 door and/or center aerial ladder tunnel door). Includes rear facing extrusions panels and doors. Colors to be [#COL]. | 2069 |
| 8300-0287 | Sign Gold Stripe - 3/4" Wide aerial sign plate - Black Gold Black. The striping shall create a border around sign plate lettering. | 1294 |
| 8300-0288 | Sign Gold Body Stripe - 3/4" Wide - Black Gold Black. To be located on upper body sides terminating with an arrow at each end. | 750 |
| 8300-0289 | Paint Break Sign Gold Chassis Stripe - 3/4" Wide - Black Gold Black. To be located at the same approximate position as a paint break with dip to grille. | 288 |
| 8300-0291 | Scotchlite stripe 1" located 2" above and below existing stripe. Color: [#COL]. | 734 |
| 8300-0292 | Chevron "A" style 6" Reflexite V98 striping on rear of body. Includes rear facing extrusions panels and doors inboard of beavertails (if equipped). Does not include rear facing outboard compartment faces. Colors to be [#COL]. | 2062 |
| 8300-0293 | Stripe cab lock bar. Color: Chevron red/yellow. | 85 |
| 8300-0294 | Florescent Yellow Green/Red Diamond Grade scotchlite. Locate on front of roll-out tray(s) front lip of adjustable/fixed shelves and tool board(s) on outer vertical edge on both sides (if applicable). | 479 |
| 8300-0296 | Scotchlite stripe 2" located flush directly above and below existing stripe. Color: [#COL]. | 928 |
| 8300-0297 | NFPA Scotchlite Stripe - 3" and 6" wide with interlocking "Z". Stripe straight on front sides and rear of cab and body. "Z" location to be specified by customer. 3" above 6" with 1" gap between stripes. Color: [#COL]. Location: [#LOC]. | 2303 |
| 8300-0298 | Scotchlite stripe 1" located below existing stripe. Color: (1) white (1) gold. | 387 |
| 8300-0300 | Reflective [#COL] 3M Diamond Grade striping positioned in the "A" formation located in the lower L5/R5 body door panels extending approximately 12" from the door's bottom. | 341 |
| 8300-0301 | NFPA Scotchlite Stripe - 6" wide with "S". Stripe straight on front sides and rear of cab and body. "S" location to be specified by customer. Color: [#COL]. Location: [#LOC]. | 1558 |
| 8300-0303 | Scotchlite Stripe - 10" wide reflective stripe on heavy duty front bumper. Color: [#COL]. | 659 |
| 8300-0304 | NFPA Scotchlite Stripe - 1"-6"-1" wide with interlocking hockey. Stripe straight on front sides and rear of cab and body. Hockey location to be specified by customer. 1" above and below 4" with 1" gap between stripes. Color: [#COL]. Location: [#LOC]. | 2073 |
| 8300-0305 | Scotchlite Stripe - 2" wide and straight on front/sides of cab and sides/rear of body. Color: [#COL]. Location: [#LOC]. | 465 |
| 8300-0306 | Chevron "A" style 6" Reflexite V98 striping on ladder rack lowering arms. The Chevron shall be applied to the rear and forward arm surfaces only. Colors to be [#COL]. | 323 |
| 8300-0307 | Reflective [#COL] Reflexite V98 striping positioned in the "A" formation located on all vertically hinged body door panels (forward door only on double doors) extending approximately 12" from the door's bottom. | 1704 |
| 8300-0310 | Blue rubrail scotchlite insert. | 238 |
| 8300-0311 | Scotchlite stripe 2" located 2" above existing stripe. Color: [#COL]. | 465 |
| 8300-0312 | Scotchlite Stripe - 4" wide with graphic white "S"; See photos on file with sales. Stripe straight on front sides and rear of cab and body. "S" location to be specified by customer. Color: Orange. Location: bottom of stripe flush with top of bumper and straight back. | 1791 |
| 8300-0314 | Signgold aerial sign plate scroll package. (1) each corner of the aerial sign plates with connecting connecting 3/4" signgold stripe. | 1365 |

| Item No. | Description | |
|---|---|---|
| 8300-0316 | Chevron "A" style 6" individual Scotchlite striping full width on rear of body. Includes driver and officer rear compartment face smooth plate panels and/or doors outboard and above the center rear compartment opening. Does not include rear compartment door. Colors to be [#COL]. | 1473 |
| 8300-0318 | NFPA Scotchlite Stripe - 6" wide and straight on body only. Color: [#COL]. Location: [#LOC]. | 832 |
| 8300-0321 | Chevron "A" style 6" printed sheet Scotchlite striping on rear of body between beavertails below full width intermediate step. Colors to be [#COL]. | 1257 |
| 8300-0322 | Florentine Gold Stripe - 1" Wide. To be located 1" above and below scotchlite stripe. | 1697 |
| 8300-0325 | Paint Break Sign Silver Chassis Stripe - 3/4" Wide - Black Silver Black. To be located above existing paint break. | 288 |
| 8300-0327 | Scotchlite stripe (PR) 1/4in. located directly above and below existing stripe. Color: [#COL]. | 770 |
| 8300-0328 | NFPA Scotchlite stripe. Temple Texas double "S" triple stripe with 1.5" black 2.5" gold and 3.5" black. See photos on file with sales. | 2931 |
| 8300-0329 | Chevron "A" style 6" 3M "Diamond Grade" striping full width on rear of body; half height from bottom per NFPA/ULC requirements. Includes rear facing extrusions panels and doors. Colors to be [#COL]. | 1555 |
| 8300-0336 | Reflective [#COL] printed Scotchlite striping positioned in the "A" formation located on all vertically hinged body door panels (forward door only on double doors) extending approximately 12" from the door's bottom. | 1015 |
| 8400-0000 | Vision flags on canopy windows (PR). | 618 |
| 8400-0004 | Install customer supplied logos on front cab doors. | 225 |
| 8400-0005 | A pair of customer logos for cab supplied to E-One in a digital format. | 968 |
| 8400-0006 | A pair of customer logos for body supplied to E-ONE in a digital format. | 1932 |
| 8400-0007 | Install customer supplied logos/striping. Location: Logos on front cab doors officer side medical cabinet roll-up door and 911 logos on L4/R4. Install customer supplied 3/8" striping above and below 6" stripe and chassis stripe at paint break. | 366 |
| 8400-0008 | Star of life logo 12". Location: [#LOC]. | 113 |
| 8400-0009 | American Flag (EA). Approx size: 7"H x 14"W. Location: [#LOC] | 129 |
| 8400-0010 | Install customer logo from an existing E-ONE design (EA). Location: [#LOC] | 139 |
| 8400-0011 | Vision flag on officer canopy window. | 312 |
| 8400-0012 | Star of life logo 22.5". Location: [#LOC] | 224 |
| 8400-0015 | Install customer supplied logos on rear cab doors. | 225 |
| 8400-0016 | A pair of Customer Logos supplied to E-One in a digital format. Location: [#LOC]. | 1007 |
| 8400-0017 | A customer logo supplied to E-ONE in a digital format. Location: [#LOC]. | 342 |
| 8400-0018 | Star of life logo 20". Location: (1) each side centered on canopy window. | 376 |
| 8400-0023 | Install customer supplied logo. Location: [#LOC]. | 79 |
| 8400-0024 | Install up to 12" SignGold customer logo from an existing E-ONE design (EA). Location: [#LOC]. | 207 |
| 8400-0025 | A customer SignGold logo (up to 12") supplied to E-ONE in a digital format. Location: [#LOC]. | 436 |
| 8400-0029 | Reflective American Flag (PR) - wavy. Approx size: 12"H x 18"W. Location: [#LOC]. | 257 |
| 8400-0036 | Star of life logo 20" (PR). Location: (1) each side centered between cab doors. | 376 |
| 8400-0037 | Vision flags (state of Texas ribbon style) on canopy windows (PR). | 618 |
| 8400-0038 | Vision flags (Canadian ribbon style) on rear cab door windows and side windows of vista extension (PR). | 618 |
| 8400-0039 | Star of life logo 12" with black outline. Location: [#LOC]. | 113 |
| 8400-0041 | Vision flag on rear commercial cab window. | 414 |
| 8400-0042 | Vision 9/11 flag raising on canopy windows (PR). | 618 |
| 8400-0045 | Yellow label with black lettering to read "Clear front bumper prior to tilting cab". Locate above cab tilt door. | 60 |
| 8400-0049 | American Flag (EA). Approx size: 16"H x 27"W. Location: Portable tank at rear and driver side of body. | 383 |
| 8400-0050 | Vision 9/11 twin tower tribute on canopy windows (PR). | 618 |
| 8400-0052 | Vision graphic on canopy windows (PR). Customer supplied to E-ONE in a digital format. | 855 |
| 8400-0053 | Waving American Flag (EA). Approx size: 7"H x 14"W. Location: [#LOC]. | 129 |
| 8400-0059 | Vision 9/11 twin tower tribute on rear cab non-vista door windows (PR). | 618 |
| **DOCUMENTATION & MISCELLANEOUS** | | |
| 9300-0003 | Waterous Compressed Air Foam System training. | $4,134 |
| 9300-0007 | Vehicle Familiar - Domestic. | $5,611 |
| 9300-0009 | Manuals Operator and Service CD-ROM. | $445 |
| 9300-0010 | Approval Drawings | $1,280 |
| 9300-0012 | Pump panel approval drawings. | $515 |
| 9300-0013 | Approval Drawings Revised | $257 |
| 9300-0017 | Manuals Printed (Set). | $1,160 |
| 9300-0018 | Manuals Operator and Service CD-ROM (additional set). | $66 |
| 9300-0031 | Dash panel layout approval drawings | $669 |
| 9300-0035 | Customer late change order. | $379 |
| 9300-0040 | As built electrical drawings. | $3,110 |
| 9300-0041 | As built plumbing drawings. | $3,884 |

| Item No. | Description | |
|---|---|---|
| 9300-0044 | Transmission programming print-out - provided at delivery. | $151 |
| 9300-0303 | Approval Drawings - Top View of body and pump module section of the vehicle. | $352 |
| 9300-0304 | Manuals printed (1). | $1,091 |
| 9300-0305 | Advent/Hot Shot Foam System Training. | $5,273 |
| 9300-0306 | Approval Drawings-Additional views. Top view of body and pump module areas. Detailed top view of the interior cab view layout. | $703 |
| 9300-0315 | Vehicle familiarization aerial (Domestic) additional per day. | $1,267 |

**Notes:**

**1) Availability of options are limited by other options selected, and not all options are available in every chassis/apparatus configuration. Selection of an option may require several of the above parts/items to complete the option package.**

**2) Certain options, alone or in combination with other options, may require heavier axle/suspension packages, longer frames, or reinforced frames at additional cost per the above price list.**

**3) To configure options, the E-One State Term Schedule authorized dealer will use quote configuration software to select the components necessary to effect the option, feature, or configuration requested and quote the total option price.**

Fire Apparatus Quotation for:
STATE OF OHIO TERM SCHEDULE

Quotation Number: 57485 Rev: 31

Unit Description: PMPR-TYPH
Quote Description: Pumper, Typhoon

| Salescode | Extended Description | Qty |
|---|---|---|
| **TESTING COMPLIANCE STANDARD** | | |
| 1001-0065 | The E-ONE supplied components of the vehicle shall meet the requirements of NFPA 1901, 2016 edition. | 1 |
| 3090-0002 | OAH. Unit has no overall height restrictions. | 1 |
| 3090-0004 | OAL. Unit has no overall length restrictions. | 1 |
| 3090-0007 | Hosebed hoseload allowance on the apparatus shall be 1200 lbs. | 1 |
| 3340-1137-12B | Equipment allowance on the apparatus shall be 2000 lbs. This allowance is in addition to the weight of the hoses and ground ladders listed in the shop order as applicable. | 1 |
| **BUMPERS** | | |
| 1160-0000 | Bumper 10" stainless steel. | 1 |
| 1160-0011 | 4" Front Bumper Extension. | 1 |
| **FRAME ASSEMBLY** | | |
| 1250-0080 | Frame assembly with 10.25 x 3.5 x .375 powder coated galvanized rails. | 1 |
| **AXLE OPTIONS** | | |
| 1025-0016 | Meritor RS-24-160 single rear axle 24,000 lb. capacity. | 1 |
| 1025-0029 | Front shock absorbers. | 1 |
| 1025-0174 | Meritor FL941 front axle 18,000 lb. | 1 |
| **SUSPENSIONS** | | |
| 1070-0001 | Rear suspension springs rated equal to the capacity of the axle. | 1 |
| **WHEEL OPTIONS** | | |
| 1050-0000 | Steel wheels for front axle (2). | 1 |
| 1050-0002 | Steel wheels for rear axle (4). | 1 |
| **WHEEL OPTIONS** | | |
| 1050-0007 | Front axle wheel trim kit. Includes stainless steel lug nut covers (chrome plated plastic if applicable) and center cap with E-ONE logo. Note: Center cap will have an inspection port IPO a logo if equipped with Stemco oil seals. | 1 |
| 1050-0008 | Rear axle (single) wheel trim kit. Includes stainless steel lug nut covers (chrome plated plastic if applicable) and center cap with E-ONE logo. E-ONE custom chassis w/steel wheels will have chrome plated plastic lug covers. | 1 |
| **TIRE OPTIONS** | | |
| 1060-0001 | Two Michelin 315 tires model XZA-1 for front axle. | 1 |
| 1060-0015 | Four Michelin 11R rear tires with XDN2 mud and snow tread. | 1 |
| 1060-0117 | RWC AirGuard LED tire pressure monitoring valve stem caps (6) for single rear axle applications. | 1 |
| **BRAKE SYSTEMS** | | |
| 1100-0000 | 16-1/2'' x 6'' S-cam brakes with ArvinMeritor automatic slack adjusters for front axle. | 1 |
| 1100-0002 | ArvinMeritor 16-1/2'' x 7'' S-cam brakes with cast brake drums for a single rear axle. | 1 |
| 1100-0005 | Brake system air 4X2/4X4. | 1 |
| 1100-0006 | Parking brake release mounted on the driver's side lower dash. | 1 |

| | | |
|---|---|---|
| **AIR SYSTEM OPTIONS** | | |
| 1110-0000-001 | Inlet for air system. Location: driver door jamb. | 1 |
| 1110-0002 | Air dryer Bendix AD-9. | 1 |
| 1110-0006 | Air lines nylon. | 1 |
| 1110-0041 | Air horns Grover recessed in bumper (PR). | 1 |
| **ENGINES & TRANSMISSIONS** | | |
| 1200-0017 | Push-button transmission shift selector. | 1 |
| 1200-0020 | TransSynd synthetic transmission fluid for EVS3000. | 1 |
| 1200-0097 | Electronic limiting of speed to 68 MPH maximum. Note: Max speed may be set at 65 MPH due to tire rating. | 1 |
| 1200-0310 | Eng/Trans Cummins ISL 350HP/EVS3000 2016 EPA compliant engine. | 1 |
| **SECONDARY BRAKING** | | |
| 1125-0002 | Jacobs engine compression brake. | 1 |
| 1125-0023 | Transmission to seek second gear when Jacobs engine brake or Telma retarder is | 1 |
| **SECONDARY BRAKING** | | |
| | engaged. N/A with Trans retarder. | |
| **COOLING PACKAGE** | | |
| 1800-0013 | Cooling system for use with Cyclone II X, Typhoon X, and Quest chassis. For use with 2010 / 2013 / 2016 EPA engines. Includes coolant recovery system. | 1 |
| **FUEL SYSTEMS** | | |
| 1350-0003 | Fuel system 50 gallon. | 1 |
| 1350-0012-670 | Fuel shut-off valve. Location: one (1) inlet side of OEM fuel filter. | 1 |
| 1350-0022 | Fuel line hose rubber. | 1 |
| **ALTERNATOR** | | |
| 1700-0003 | Alternator Leece Neville 270 amp SAE, 240 amp NFPA rating. | 1 |
| **BATTERIES** | | |
| 1400-0002 | Battery four group 31 1000 CCA. | 1 |
| **CHASSIS OPTIONS** | | |
| 1680-0005 | Thermatic fan clutch. | 1 |
| 1680-0006 | Drivelines 1710. | 1 |
| 1680-0011 | Tow eyes rear below body, painted. | 1 |
| 1680-0042 | Tow hooks front painted in the down position. | 1 |
| 1680-0250-M58 | Diesel Exhaust Fluid (DEF) 5 gallon tank for 2013 / 2016 EPA engines. Location: left side below rear of cab. | 1 |
| 1680-0284 | Radiator mounted power steering cooler. | 1 |
| **CAB MODEL** | | |
| 1520-0013 | Typhoon X medium cab with 58" CA | 1 |
| **CAB ROOF TYPE** | | |
| 1615-0010 | Cab roof to be "flat" (non-vista). | 1 |
| **CAB BADGE PACKAGE** | | |
| 1610-0000 | Cab and body to have applicable E-ONE logos. | 1 |
| **GRILLE** | | |
| 1620-0004 | ABS chrome plated grille. | 1 |
| **CAB DOOR OPTIONS** | | |
| **CAB DOOR OPTIONS** | | |
| 1550-0003 | Rear crew cab doors in the medium position. | 1 |
| 1550-0005 | Driver and officer cab door windows. Include forward vent windows. | 1 |

| | | |
|---|---|---|
| 1550-0011 | Rear crew cab door windows. Includes manual roll-down actuation. Not available on Typhoon or CII with paddle style door latching. | 1 |
| 1550-0016 | Cab door panels ABS. | 1 |
| 1550-0025 | All cab doors shall have "L" style exterior latches. | 1 |
| 1550-0027 | Front cab door windows to have manual actuation. | 1 |
| 1550-0038-659 | (4) LED cab step area lighting. Locate each light on each cab door in the inboard position. Lights to be switched with door ajar. | 1 |
| 1550-0044 | All cab door kick plates to be made from diamond plate aluminum. | 1 |
| 1550-0059-000-G6 | Reflective Red/Lemon Yellow printed striping positioned in the "A" formation located on the cab door panels. | 1 |
| 1550-0077 | Interior cab door locks - manual. Will have manual actuation from each respective door. Includes barrel style key lock on each exterior cab door. | 1 |
| 1550-0084 | All cab exterior access doors to have 1250 keyed locks. | 1 |

| MIRRORS | | |
|---|---|---|
| 1670-0003 | Velvac 2010 mirrors. Door mounted west coast style with remote control and heat. | 1 |

| MISC EXTERIOR CAB OPTIONS | | |
|---|---|---|
| 1550-0020 | Windows cab side fixed driver's side. | 1 |
| 1550-0033 | Windows cab side fixed officer's side. | 1 |
| 1675-0022 | Pair of 18" handrails located just behind driver and officer front door one each side. | 1 |
| 1675-0023 | Pair of 18" handrails located just behind driver and officer rear door (ALS doors if equipped) one each side. | 1 |
| 1675-0030 | Mud flaps, front, black with E-ONE logo. | 1 |
| 1675-0047 | Rear cab wall to be 3/16" aluminum diamond plate. | 1 |
| 1675-0202 | Mounting plate for battery charger receptacle, indicator and air inlet (if applicable). Plate to be removable brushed stainless steel. | 1 |

| HVAC | | |
|---|---|---|
| 1515-0017 | Air conditioning for the Typhoon X, CII X and Quest with Cummins ISC/ISL engine and radiator mounted condenser. | 1 |
| 1515-0053 | Controls for heating and air conditioning shall be located in the center dash area. (Lower area on Typhoon and CII with severe duty dash) | 1 |

| SEATS | | |
|---|---|---|
| 1510-0003 | Seats, Inc. brand 911 cab seats. | 1 |
| 1510-0008 | Seat color gray. | 1 |
| 1510-0035-147 | Universal air pack bottle bracket (EA). Location: officer's seat. | 1 |
| 1510-0035-148 | Universal air pack bottle bracket (EA). Location: rear facing driver's side. | 1 |
| 1510-0035-215 | Universal air pack bottle bracket (EA). Location: rear facing officer's side. | 1 |
| 1510-0038 | Driver seat 911 air ride. | 1 |
| 1510-0042 | Officer seat to be 911 fixed SCBA. | 1 |
| 1510-0050 | Rear facing 911 seat with SCBA driver's side. | 1 |
| 1510-0053 | Rear facing 911 seat with SCBA officer's side. | 1 |
| 1510-0234 | Seat cover material Turnout Tuff. | 1 |
| 1685-0031 | Seating capacity tag of four occupants. | 1 |

| MISC INTERIOR CAB OPTIONS | | |
|---|---|---|
| 1685-0000 | Cab interior gray. Does not include engine cover or seat color. | 1 |
| 1685-0005 | Lexan sun visors, driver and officer's side overhead. | 1 |
| 1685-0168 | ABS Dash package. Includes center and officer side dash, lower kick panels and "A" post covers. | 1 |
| 1685-0187 | Severe duty engine cover, molded polyurethane. | 1 |

| CAB ELECTRICAL OPTIONS | | |
|---|---|---|
| 1750-0013-172 | Turn signal Whelen 600 LED amber arrow pair located upper headlight bezel. | 1 |
| 1750-0024-179-04 | Auto-Eject receptacle inlet 20 amp located outside driver's door next to handrail with a Yellow cover. | 1 |
| 1750-0029 | Switch horn button two position DOT/air horn. | 1 |
| 1750-0046-195 | Cab Headlights. Position: lower. | 1 |

| | | |
|---|---|---|
| 1750-0072-593 | 12 VDC (or 24VDC) electrical outlet in the cab wired battery hot. Location: officer side dash. | 2 |
| 1750-0075 | English dominant main cab gauge cluster. | 1 |
| 1750-0158 | Dome Lts Red/White LED. Package includes two lights mounted in the front and two mounted in the rear of the cab. White light wired through door and light assembly switch. Red light through light assembly switch. | 1 |
| 1750-0198-A31 | Battery charger to be located behind driver's seat. | 1 |
| 1750-0343 | Battery charger E-ONE LPC 20. 120 volt inlet, 20 amp output. | 1 |
| 1750-0435 | Halogen cab headlights. TyphoonX, CIIX and QST2 only. | 1 |
| CAB ELECTRICAL OPTIONS | | |
| 1750-0449 | Momentary DPF regeneration override switch. | 1 |
| BODY COMPT LEFT SIDE | | |
| 3100-0095 | Driver side body with full height 36" wide forward and 36" wide rearward compartmentation. Includes (1) 56" wide compartment over the wheel well. | 1 |
| BODY COMPT RIGHT SIDE | | |
| 3120-0004 | Officer half side body with 36" wide forward and 36" wide rearward compartmentation. Includes adjustable ladder tracks. | 1 |
| BODY COMPT REAR | | |
| 3110-0005 | Full Height Rear Compartment. Includes smooth plate panels. | 1 |
| 3110-0034 | Upper rear compartment depth to be shallow. | 1 |
| 3340-0115 | Bolt-on diamond plate 16" tailboard (full width of body). Includes (2) squared off beavertails (no stanchions) with removable outer panels and handrails- (2) vertical on trailing edge of body and horizontal mounted handrail(s) below hosebed. | 1 |
| DOORS | | |
| 3300-0017-004 | Door roll up short (up to 45") with satin finish ROM. Location(s): L2. | 1 |
| 3300-0017-015 | Door roll up short (up to 45") with satin finish ROM. Location(s): R1. | 1 |
| 3300-0017-016 | Door roll up short (up to 45") with satin finish ROM. Location(s): R2. | 1 |
| 3300-0019-003 | Door roll up tall (greater than 45") with satin finish ROM. Location(s): L1. | 1 |
| 3300-0019-005 | Door roll up tall (greater than 45") with satin finish ROM. Location(s): L3. | 1 |
| 3300-0019-027 | Door roll up tall (greater than 45") with satin finish ROM. Location(s): B1. | 1 |
| SHELVES | | |
| 3370-0025-099 | Shelf, permanent shelf. Locate in L1 at offset (above extrusion if applicable). | 1 |
| 3370-0025-100 | Shelf, permanent shelf. Locate in L3 at offset (above extrusion if applicable). | 1 |
| 3370-0052-I41 | Adjustable shelf (J-Style) for non-transverse compartments 16" or greater in depth. Location: B1 lower. | 1 |
| 3370-0054-I41 | Tracks for adjustable shelf and/or adjustable tray in compartments 16" or greater in depth. Location: B1 lower. | 1 |
| COVERS | | |
| 3305-0007-000-02 | Vinyl Red hose bed cover with attached rear flap(s). | 1 |
| 3305-0008-000-02 | Vinyl Red crosslay cover with attached side flaps. | 1 |
| PUMP MODULE | | |
| 3130-0167 | Pump module to be 76" wide (side to side). Includes upper, lower, crosswalk, speedlay and tranverse module(s) if applicable. | 1 |
| 3130-0523 | Side mount pump module. Extruded aluminum with runningboards. | 1 |
| 3130-0532 | Pump panel opening is 39" wide. Pumper / tanker only. | 1 |
| 3130-0540 | Pump module height is 80". Pumper / tanker only. | 1 |
| PUMP PANELS | | |
| 3134-0016 | Stainless steel driver and officer side pump panels. | 1 |
| 3134-0064 | The gauge panel(s) on the driver side of the Side Mount module to be hinged upward. Panel(s) to include (2) mechanical/pneumatic (as applicable to panel size) hold opens and latches. | 1 |
| 3134-0143 | Officer side pump panel to be vertical hinged on forward extrusion. Panel to be (3) pieces with upper (2) panels secured in the closed position with push button latches. Upper panel to be held open with | 1 |

| | | |
|---|---|---|
| | gas shock. | |
| **MISC PUMP PANEL OPTIONS** | | |
| 4460-0003 | Pump panel tags color coded per NFPA compliance. | 1 |
| **PUMP MODULE OPTIONS** | | |
| 3136-0058 | E-ONE logo mounted one each side on pump module/preconnect panels. Logos to be sized as applicable to available space on panels. | 1 |
| 3136-0138 | Pump module storage pan. | 1 |
| 3136-0141 | Crosslay double 4.25" wide single stack to hold up to 200' of 2.0" DJ (each). | 1 |
| **WATER TANK** | | |
| 4010-0099 | Fill tower(s) to be located offset to officer side of water tank. | 1 |
| 4010-0174 | 530 Gallon "T" Water Tank. UPF Poly III color fill towers. Note: Any foam cell(s) will reduce the overall water capacity. | 1 |
| **TANK PLUMBING** | | |
| 4450-0010 | 2" tank fill Akron manual valve. | 1 |
| 4450-0119 | 3" tank to pump Akron manual valve w/4" tank connection. | 1 |
| **LADDER STORAGE / RACKS** | | |
| 3365-0025-515 | Attic ladder mounting brackets (PR). Locate officer side compartment top. | 1 |
| 3365-0028 | Hard Suction Storage Rack. Driver side compartment top. Includes spring hold downs and scuff plates behind spring mounts (as applicable). | 1 |
| 3365-0031 | Hard Suction Storage Rack. Officer side in adjustable track above ladders (if | 1 |
| **LADDER STORAGE / RACKS** | | |
| | applicable). Includes spring hold downs and scuff plates. | |
| 3365-0034-515 | (2) aluminum pike pole storage tubes. Locate officer side compartment top. | 1 |
| 3365-0049 | Brand of ladders capable of being carried on unit to be Alco-Lite. | 1 |
| 3365-0086-B99 | Pike pole(s) capable of being stored are to be the following length: (2) 10' pike poles. | 1 |
| 3365-0087-C57 | The length of ladders capable of being stored shall be the following: 24' 2-section and 14' roof ladder. | 1 |
| 3365-0168 | Pike pole tube secondary retaining pin(s) with cable. Locate on end of pike pole tube(s). | 1 |
| **HANDRAILS / STEPS** | | |
| 3330-0277 | Innovative Controls dual lighted LED folding steps rear NFPA. Includes folding steps on driver side (staggered stepped as applicable with tailboard depth) for NFPA hosebed access and handrail mounted on driver side upper hosebed side (as applicable). | 1 |
| 3330-0279-060 | Innovative Controls dual lighted LED folding step. Location: officer side front compartment face. Each location requires a minimum of (1) handrail per NFPA. | 1 |
| 3330-0279-062 | Innovative Controls dual lighted LED folding step. Location: driver side front compartment face. Each location requires a minimum of (1) handrail per NFPA. | 4 |
| **MISC BODY OPTIONS** | | |
| 3340-0004 | Hosebed above the booster tank. Includes forward hosebed and tower(s) cover plate work (as applicable). Hosebed adjustable divider extrusion rearward of the furthest tower is to run full width of the hosebed (as is practical with other hosebed mounted equipment). | 1 |
| 3340-0015 | Diamond plate single axle wheel well. Includes bolt-on composite wheel well liners and aluminum trim fenderettes. | 1 |
| 3340-0035 | Divider Long. To run full length of hose bed (front to rear). | 1 |
| 3340-0058 | Recessed fuel fill driver side wheel well. | 1 |
| 3340-0074 | Body mainframe and hosebed side assemblies for a 85" high body. | 1 |
| 3340-0093 | Mud flaps, rear, black with E-ONE logo. | 1 |
| 3340-0110 | The rear of each hose bed divider to have a hand hold cut-out(s). | 1 |
| 3340-0128 | Bolt-in partition walls. Locate in lower rear compartment transverse area. Partitions to separate the side rear compartments from the rear compartment. | 1 |
| 3340-0145 | Rub rail for the body and pump area module(s). | 1 |

| | | |
|---|---|---|
| 3340-0681 | Body mainframe layout line to be 24". Includes body and all applicable modules. | 1 |
| SCBA BOTTLE STORAGE | | |
| 3320-0100 | Strap(s), loop style to retain SCBA bottle(s). Locate one per bottle in each exterior storage compartment. | 1 |
| 3320-0187-495 | Cast Products brand (1) SCBA bottle storage with gasketed door and push button latch. Door shall NOT cover the recessed fuel fill if located adjacent to the SCBA storage. Location: driver side rear wheel well offset forward | 1 |
| 3320-0187-497 | Cast Products brand (1) SCBA bottle storage with gasketed door and push button latch. Door shall NOT cover the recessed fuel fill if located adjacent to the SCBA storage. Location: driver side rear wheel well offset rearward | 1 |
| 3320-0187-498 | Cast Products brand (1) SCBA bottle storage with gasketed door and push button latch. Door shall NOT cover the recessed fuel fill if located adjacent to the SCBA storage. Location: officer side rear wheel well offset forward | 1 |
| 3320-0187-500 | Cast Products brand (1) SCBA bottle storage with gasketed door and push button latch. Door shall NOT cover the recessed fuel fill if located adjacent to the SCBA storage. Location: officer side rear wheel well offset rearward | 1 |
| PUMPS | | |
| 4005-0030 | Rating 1250 GPM | 1 |
| 4005-0195 | Hale QFLO 750-1250 GPM pump, single stage. Requires primer option. | 1 |
| PUMP CERTIFICATION | | |
| 4475-0000 | Pump certification 750-2250 GPM | 1 |
| PUMP OPTIONS | | |
| 4015-0008 | Zinc anodes for Hale pump (PR), (1) discharge side and (1) intake side. | 1 |
| 4015-0052-198 | Steamers to be Flush. Location: driver's side. | 1 |
| 4015-0052-199 | Steamers to be Flush. Location: officer's side. | 1 |
| 4015-0098 | Manual operated master pump drain. The master drain shall be clearly marked and placed in accessible location on pump panel. | 1 |
| 4015-0210 | Pump cooler with Innovative Control 1/4 turn valve with "T" handle and label. | 1 |
| 4015-0238 | Hale electric primer (oil-less). | 1 |
| INTAKES | | |
| 4440-0005 | 2.5" Left Intake Akron Manual Valve. | 1 |
| INTAKE OPTIONS | | |
| 4445-0016 | Intake relief valve, Hale 2.5". | 1 |
| DISCHARGES AND PRECONNECTS | | |
| DISCHARGES AND PRECONNECTS | | |
| 4415-0012-654 | 1.5" Crosslay with Akron manual valve. Location: crosslay 1 & 2. | 2 |
| 4415-0014-581 | 2.5" Left Pump Panel Discharge Akron Manual Valve. Location: left side discharge 1. | 1 |
| 4415-0014-582 | 2.5" Left Pump Panel Discharge Akron Manual Valve. Location: left side discharge 2. | 1 |
| 4415-0022-350 | 2.5" Left Rear Discharge Akron Manual Valve. Location: left rear discharge. | 1 |
| 4415-0041 | 3" Deck Gun Discharge, Akron manual valve. | 1 |
| 4415-0054-583 | 4" Right Pump Panel Discharge with 3" Akron Manual Valve (Waterous pumps noted location to be forward lower port). Location: right side discharge 1. | 1 |
| 4417-0106-L65 | Deck gun piping to be positioned centered in deck gun channel. | 1 |
| DISCHARGE OPTIONS | | |
| 4417-0175 | Innovative Controls push/pull valve controls with locking T handles. | 1 |
| 4417-0176 | Innovative Controls 3/4" bleeder/drain valve include lift lever with ergonomic grip. | 7 |
| 4417-0185 | Innovative Controls discharge and intake bezels with integral color code and verbiage for side mount pump panel. | 1 |
| PRESSURE GOVERNORS | | |
| 4465-0011 | Class 1 TPG pressure governor. Includes, water, oil, volt and tachometer. | 1 |

| | | |
|---|---|---|
| GAUGES | | |
| 4435-0083 | Innovative Controls 10 LED SL series water tank level gauge. On pump panel. | 1 |
| 4435-0246 | 2.5" Innovative Controls stainless steel case pressure gauge (0-400) with color code bezel. | 7 |
| 4435-0247 | 4" Innovative Controls stainless steel case master pressure gauges with bezel. Intake 30-0-400, and discharge 0-400. | 1 |
| ELECTRICAL SYSTEMS | | |
| 5010-0013-Y83 | Vehicle data recorder - 2009 / 2016 NFPA compliant. Includes occupant detection with display. Display location: inboard on driver's side overhead console. | 1 |
| 5010-0036 | V-MUX Electrical system for pumper / tanker / rescue. | 1 |
| 5010-0059-339 | VFD Text display for V-MUX electrical system. Location: center of dash. | 1 |
| LIGHT BARS | | |
| 5300-0504 | Whelen MKEZ7 1.5" standard mount for front light bar (PR). | 1 |
| 5300-0506-000-4V | Light bar LED color: Red/White with clear lenses | 1 |
| LIGHT BARS | | |
| 5300-0511 | Light bar Whelen Freedom IV Model F4X7 72" with 8 LED modules. Location: Centered on the front cab roof. | 1 |
| WARNING LIGHT PACKAGES | | |
| 5550-0059-535 | Whelen Super LED lower level warning light package. Includes (8) red 600 LED light heads and (2) red 500 LED light heads w/chrome flanges. Locate side facing lights: at forward most position, centered in rear wheel well, and side facing at rear of body in rubrail if equipped. | 1 |
| WARNING LIGHTS | | |
| 5600-0078-479-06 | Whelen Super LED beacon (PR) model L31H with Red domes. Location rear upper body on aerial style brackets. | 1 |
| 5600-0105-170 | Hazard (door ajar) light 2" LED. Location: center overhead. | 1 |
| SIRENS | | |
| 5500-0015 | Whelen model 295SLSA1 siren with microphone (replaced 295HFSA1). | 1 |
| 5500-0024-170 | The electronic siren control is to be located on the center overhead. | 1 |
| SPEAKERS | | |
| 5510-0029-209 | Speaker, Federal Signal Dynamax ES100 with "E-ONE" grille through bumper. Location: driver side front bumper. | 1 |
| DOT LIGHTING | | |
| 5150-0007 | Whelen 600 series LED vertical mount tail lights. Includes LED stop/tail, arrow turn and halogen back-up lights with vertical Cast 3 housing and weatherproof connectors. | 1 |
| 5150-0017 | License plate light LED with chrome housing located at the rear of the body. | 1 |
| 5150-0025 | Marker light LED body/cab package. E-One custom cab and pumper or tanker body only. | 1 |
| 5150-0032 | Bracket license plate at rear of body. | 1 |
| LIGHTS - COMPARTMENT, STEP & GROUND | | |
| 5380-0189 | Compartment light package Amdor Luma-Bar LED for small bodies. Includes one light per compartment (two if transverse). | 1 |
| 5380-0200 | Ground light package EON LED - small. | 1 |
| LIGHTS - DECK AND SCENE | | |
| 5390-0058-395 | Deck Lights - Truck-Lite LED model 81380 (PR). Location: rear body/beavertail area on the trailing edge up high. | 1 |
| LIGHTS - DECK AND SCENE | | |
| 5390-0076 | Hose bed light Truck-Lite LED model 81380. Locate at front of hose bed. Switched with work light switch in cab. | 1 |
| 5390-0102 | Crosslay light Truck-Lite LED model 81380. Locate to rear of crosslay (SM) and forward of crosslay (TM | 1 |

| | | |
|---|---|---|
| | as applicable). Switched with work light switch in cab. | |
| **LIGHTS - NON-WARNING** | | |
| 5400-0003 | Engine compartment light (EA). | 1 |
| 5400-0010 | Incandescent pump compartment light (EA). | 1 |
| 5400-0054 | Spotlight Specialty 2150 hand held located on officer's side of cab dash w/12V receptacle. | 1 |
| 5400-0092 | Weldon pump panel LED light package with (3) lights per side pump panel. Pump panels over 45" may require additional lights. Side mount only. | 1 |
| **CONTROLS / SWITCHES** | | |
| 5100-0000-199 | Foot switch to control air horns located officer's side. | 1 |
| 5100-0007-198 | Foot switch to control electronic siren located driver's side. | 1 |
| **MISC ELECTRICAL** | | |
| 1750-0082-762 | 12V power distribution module. Includes (6) battery hot and (6) switched hot circuits. 100 amps max (IATS). Location: behind officer's seat. | 1 |
| 5110-0017 | Back-up alarm 97 dB. | 1 |
| **LIGHTS - QUARTZ** | | |
| 5450-0290-408 | Light Whelen Pioneer model PFP1 12V with internal top raise pole mount. Includes switch accessible to driver. Location: officer side of pump module forward area. | 1 |
| 5450-0290-G19 | Light Whelen Pioneer model PFP1 12V with internal top raise pole mount. Includes switch accessible to driver. Location: driver side rearward of crosslay(s). | 1 |
| **ELBOWS** | | |
| 7400-0004 | Elbow 30 degree chrome swivel w/2.5"FNST x 2.5"MNST. | 2 |
| **ADAPTERS** | | |
| 7200-0026 | Swivel Connector 4" FNST x 5" Storz 30 Deg Elbow with Tethered Cap. | 1 |
| **HAND TOOLS** | | |
| 7600-0005 | Pike Pole Fiberglass 6'. | 1 |
| 7600-0007 | Pike Pole Fiberglass 10'. | 1 |
| **HOSE / NOZZLES** | | |
| 7700-0004 | Hard suction hose 6" X 10' with Pyrolite couplings. | 2 |
| **GROUND LADDERS** | | |
| 7800-0007 | Alco-Lite PRL-14' roof ladder. | 1 |
| 7800-0016 | Alco-Lite PEL-24' 2-section extension ladder. | 1 |
| 7800-0032 | Alco-Lite FL-10, 10' folding ladder w/safety shoes. | 1 |
| **MISC LOOSE EQUIPMENT** | | |
| 7900-0010 | Chrome Barrel Strainer 6" NST. | 1 |
| 7900-0014 | DOT Required Drive Away Kit - Kit includes three (3) triangular warning reflectors with carrying case. This kit is for the end user and is to remain with the truck. | 1 |
| **EXTERIOR PAINT** | | |
| 8100-0071 | Undercoating E-ONE. | 1 |
| 8100-0089 | All applicable pump/pre-connect application modules are to have a sanded finish (not painted job color). Includes upper and lower pump modules, crosswalk module and/or speedlay/pre-connect module (as applicable). Rear mounted body/pump module to be painted job color. | 1 |
| 8100-0116 | Rear body surface to have a sanded finish (not painted job color). Includes hinged doors that do not have discrete sales codes and removable panels. | 1 |
| 8100-0176-000-17 | Paint E-ONE chassis cab - Sikkens paint. Color: FLNA3225E-1 Red. | 1 |
| 8100-0182-000-17 | Paint Body - Small - For Pumpers, Rear Mounts, S/A Tankers/Wetsides and Rescues. Sikkens paint. Color: FLNA3225E-1 Red. | 1 |
| 8100-0186-000-39 | Paint exterior surface of outer steel wheels. Sikkens paint. Color: Job Color. | 1 |

| | | |
|---|---|---|
| INTERIOR PAINT | | |
| 8150-0011 | The interior of the cab to be painted Zolatone gray. | 1 |
| STRIPING | | |
| 8300-0002-334-12 | NFPA Scotchlite Stripe - 4" wide and straight on front/sides of cab and sides/rear of body. Color: White. Location: bottom of stripe flush with top of bumper and straight back. | 1 |
| 8300-0042 | White rubrail scotchlite insert. | 1 |
| 8300-0084-000-72 | Chevron "A" style 6" printed sheet Scotchlite striping full width on rear of body. Includes rear facing extrusions, panels and doors. Colors to be Yellow/Red. | 1 |
| 8300-0313 | Yellow line to indicate designated standing / walking areas above 48" high in compliance with 2016 NFPA 1901. Line to be 1" wide. Steps, ladders and areas with a railing or structure at least 12" high are excluded from requiring the line. | 1 |
| WARRANTY / STANDARD & EXTENDED | | |
| 9100-0000 | Standard 1 Year Warranty. | 1 |
| 9100-0003 | Lifetime Frame Warranty. | 1 |
| 9100-0004 | 10 Year/100,000 Mile Structural Warranty for Alum Cab / Body - Statement of Warranty. | 1 |
| 9100-0005 | 10 Year Stainless Steel Plumbing Warranty - Statement of Warranty. | 1 |
| 9100-0019 | 10 Year Limited Paint and Perforation Warranty - For Sikkens Paint. | 1 |
| 9100-0090 | 25 Year frame rail corrosion warranty. Includes liners (if equipped). | 1 |
| SUPPORT, DELIVERY, INSPECTIONS AND MANUALS | | |
| 9300-0009 | Manuals, Operator and Service CD-ROM. | 1 |
| 9300-0016 | Approval Drawings-Standard. | 1 |
| 9300-0316 | Fire Apparatus Safety Guide published by FAMA, latest edition. | 1 |

PRICE - 2017 E-ONE PUMPER - TYPHOON CHASSIS - $347,020

# STATE OF OHIO TERM SCHEDULE

## 4200 SURFACE RD
## COLUMBUS, OH 43228

*Quote No: 57485*

8/27/2016

Quote Rev:31 Drawing Rev:7

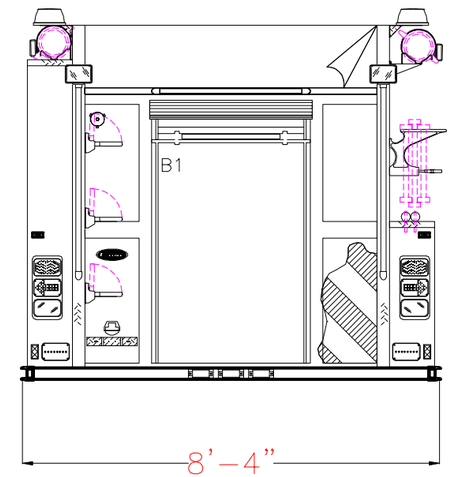


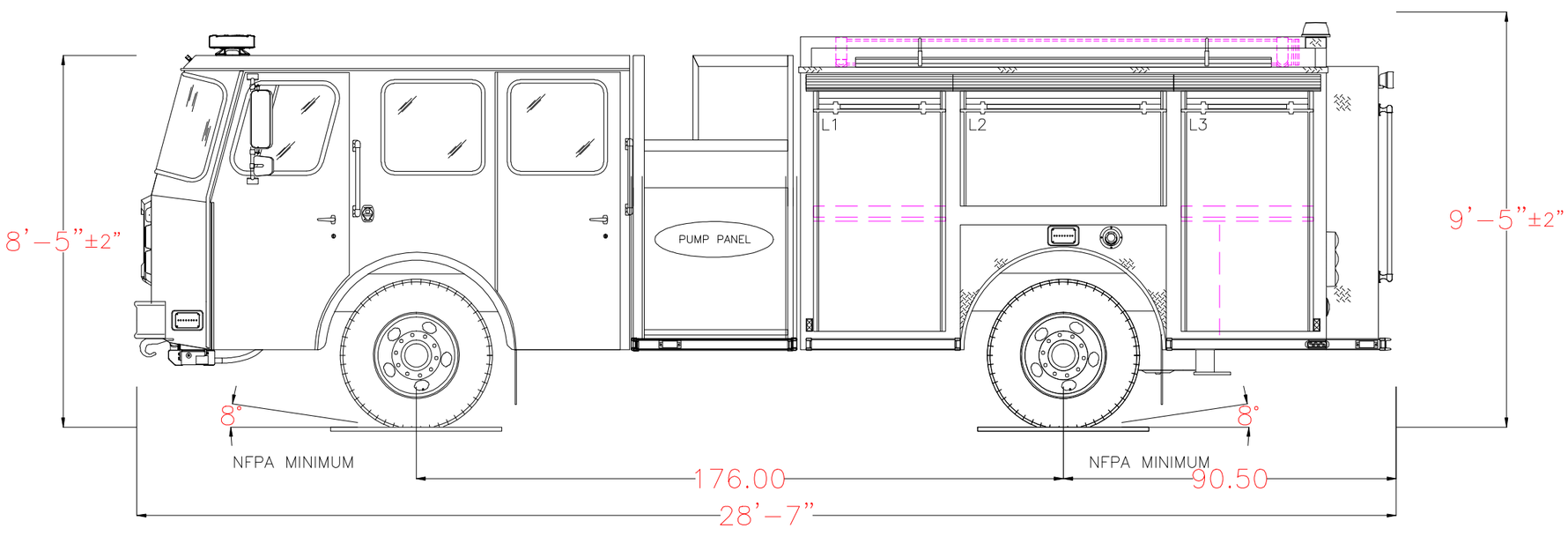


POWERED BY EZDRAW

Notice: This drawing provides a GENERAL REPRESENTATION of the vehicle configuration and should be used for evaluation purposes. The respective dimensions shown,including overall height and length, are estimates and may vary due to manufacturing processes. All other items such as lighting and fixtures, plumbing, compartmentation, and other generally assembled details are shown for REFERENCE ONLY and may not be a direct reflection of the final truck configuration. In ALL situations where this drawing may conflict with the specifications, THE SPECIFICATIONS, AS REFLECTED IN THE APPROVED SHOP ORDER, SHALL PREVAIL. Unless otherwise specified, the proposed apparatus will be manufactured to the latest NFPA recommendations as well as other applicable federally regulated safety regulations. E-One reserves the right to engineer and incorporate design improvements and changes without notice, while adhering to the intent of the specification.

| 1250 GPM PUMP<br>0 TOTAL VOLUME<br>0 TOTAL FOAM | HOSE LOADS : |
|---|---|
| | |
| | |
| | |
| | |

| | OPENING | | INTERIOR DIMENSIONS | | | | |
|---|---|---|---|---|---|---|---|
| COMPT. | WIDTH | HEIGHT | WIDTH | LOWER HEIGHT | LOWER DEPTH | UPPER HEIGHT | UPPER DEPTH |
| L1 | 34 | 59.75 | 36 | 30 | 26 | 26.75 | 12 |
| L2 | 54 | 25.75 | 56 | N/A | N/A | 26.75 | 12 |
| L3 | 34 | 59.75 | 36 | 30 | 26 | 26.75 | 12 |
| R1 | 34 | 21 | 36 | 30 | 26 | N/A | N/A |
| R2 | 34 | 21 | 36 | 30 | 26 | N/A | N/A |
| B1 | 36 | 45 | 38 | 30 | 26 | 24 | 14 |

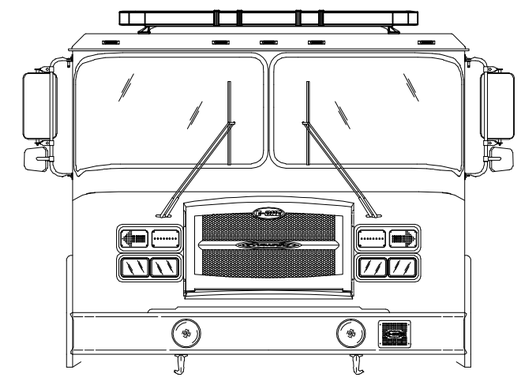

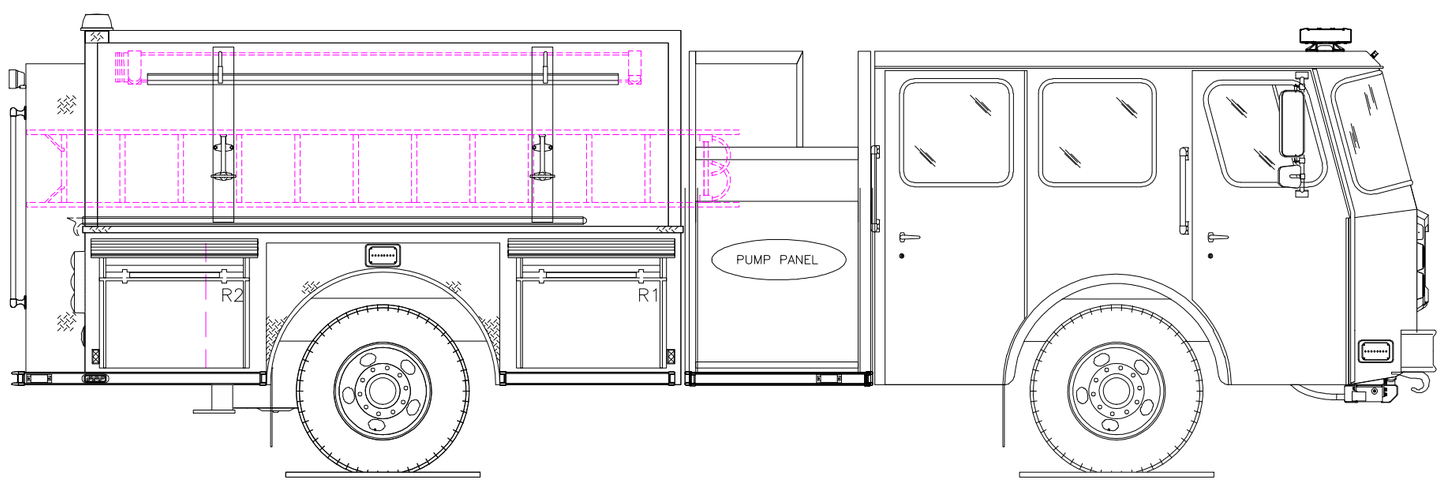


POWERED BY EZDRAW

Fire Apparatus Quotation for:
STATE OF OHIO TERM SCHEDULE

Quotation Number: 57487 Rev: 27

Unit Description: PMPR-TYPH
Quote Description: Pumper, Typhoon

| Salescode | Extended Description | Qty |
|---|---|---|
| **TESTING COMPLIANCE STANDARD** | | |
| 1001-0065 | The E-ONE supplied components of the vehicle shall meet the requirements of NFPA 1901, 2016 edition. | 1 |
| 3090-0002 | OAH. Unit has no overall height restrictions. | 1 |
| 3090-0004 | OAL. Unit has no overall length restrictions. | 1 |
| 3090-0007 | Hosebed hoseload allowance on the apparatus shall be 1200 lbs. | 1 |
| 3340-1137-12C | Equipment allowance on the apparatus shall be 2500 lbs. This allowance is in addition to the weight of the hoses and ground ladders listed in the shop order as applicable. | 1 |
| **BUMPERS** | | |
| 1160-0000 | Bumper 10" stainless steel. | 1 |
| 1160-0011 | 4" Front Bumper Extension. | 1 |
| **FRAME ASSEMBLY** | | |
| 1250-0011 | Rear underbody support frame. | 1 |
| 1250-0080 | Frame assembly with 10.25 x 3.5 x .375 powder coated galvanized rails. | 1 |
| **AXLE OPTIONS** | | |
| 1025-0016 | Meritor RS-24-160 single rear axle 24,000 lb. capacity. | 1 |
| 1025-0029 | Front shock absorbers. | 1 |
| 1025-0174 | Meritor FL941 front axle 18,000 lb. | 1 |
| **SUSPENSIONS** | | |
| 1070-0001 | Rear suspension springs rated equal to the capacity of the axle. | 1 |
| **WHEEL OPTIONS** | | |
| 1050-0000 | Steel wheels for front axle (2). | 1 |
| 1050-0002 | Steel wheels for rear axle (4). | 1 |
| 1050-0007 | Front axle wheel trim kit. Includes stainless steel lug nut covers (chrome plated plastic if applicable) and center cap with E-ONE logo. Note: Center cap will have an inspection port IPO a logo if equipped with Stemco oil seals. | 1 |
| 1050-0008 | Rear axle (single) wheel trim kit. Includes stainless steel lug nut covers (chrome plated plastic if applicable) and center cap with E-ONE logo. E-ONE custom chassis w/steel wheels will have chrome plated plastic lug covers. | 1 |
| **TIRE OPTIONS** | | |
| 1060-0001 | Two Michelin 315 tires model XZA-1 for front axle. | 1 |
| 1060-0015 | Four Michelin 11R rear tires with XDN2 mud and snow tread. | 1 |
| 1060-0117 | RWC AirGuard LED tire pressure monitoring valve stem caps (6) for single rear axle applications. | 1 |
| **BRAKE SYSTEMS** | | |
| 1100-0000 | 16-1/2" x 6" S-cam brakes with ArvinMeritor automatic slack adjusters for front axle. | 1 |
| 1100-0002 | ArvinMeritor 16-1/2" x 7" S-cam brakes with cast brake drums for a single rear axle. | 1 |
| 1100-0005 | Brake system air 4X2/4X4. | 1 |
| 1100-0006 | Parking brake release mounted on the driver's side lower dash. | 1 |
| **AIR SYSTEM OPTIONS** | | |

| | | |
|---|---|---|
| 1110-0000-001 | Inlet for air system. Location: driver door jamb. | 1 |
| 1110-0002 | Air dryer Bendix AD-9. | 1 |
| 1110-0006 | Air lines nylon. | 1 |
| 1110-0041 | Air horns Grover recessed in bumper (PR). | 1 |
| ENGINES & TRANSMISSIONS | | |
| 1200-0017 | Push-button transmission shift selector. | 1 |
| 1200-0020 | TransSynd synthetic transmission fluid for EVS3000. | 1 |
| 1200-0097 | Electronic limiting of speed to 68 MPH maximum. Note: Max speed may be set at 65 MPH due to tire rating. | 1 |
| 1200-0310 | Eng/Trans Cummins ISL 350HP/EVS3000 2016 EPA compliant engine. | 1 |
| SECONDARY BRAKING | | |
| 1125-0002 | Jacobs engine compression brake. | 1 |
| 1125-0023 | Transmission to seek second gear when Jacobs engine brake or Telma retarder is engaged. N/A with Trans retarder. | 1 |
| COOLING PACKAGE | | |
| 1800-0013 | Cooling system for use with Cyclone II X, Typhoon X, and Quest chassis. For use with 2010 / 2013 / 2016 EPA engines. Includes coolant recovery system. | 1 |
| FUEL SYSTEMS | | |
| 1350-0003 | Fuel system 50 gallon. | 1 |
| 1350-0012-670 | Fuel shut-off valve. Location: one (1) inlet side of OEM fuel filter. | 1 |
| 1350-0022 | Fuel line hose rubber. | 1 |
| ALTERNATOR | | |
| 1700-0003 | Alternator Leece Neville 270 amp SAE, 240 amp NFPA rating. | 1 |
| BATTERIES | | |
| 1400-0002 | Battery four group 31 1000 CCA. | 1 |
| CHASSIS OPTIONS | | |
| 1680-0005 | Thermatic fan clutch. | 1 |
| 1680-0006 | Drivelines 1710. | 1 |
| 1680-0011 | Tow eyes rear below body, painted. | 1 |
| 1680-0042 | Tow hooks front painted in the down position. | 1 |
| 1680-0250-M58 | Diesel Exhaust Fluid (DEF) 5 gallon tank for 2013 / 2016 EPA engines. Location: left side below rear of cab. | 1 |
| 1680-0284 | Radiator mounted power steering cooler. | 1 |
| CAB MODEL | | |
| 1520-0013 | Typhoon X medium cab with 58" CA | 1 |
| CAB ROOF TYPE | | |
| 1615-0010 | Cab roof to be "flat" (non-vista). | 1 |
| CAB BADGE PACKAGE | | |
| 1610-0000 | Cab and body to have applicable E-ONE logos. | 1 |
| GRILLE | | |
| 1620-0004 | ABS chrome plated grille. | 1 |
| CAB DOOR OPTIONS | | |
| 1550-0003 | Rear crew cab doors in the medium position. | 1 |
| 1550-0005 | Driver and officer cab door windows. Include forward vent windows. | 1 |
| 1550-0011 | Rear crew cab door windows. Includes manual roll-down actuation. Not available on Typhoon or CII with paddle style door latching. | 1 |
| 1550-0016 | Cab door panels ABS. | 1 |
| 1550-0025 | All cab doors shall have "L" style exterior latches. | 1 |
| 1550-0027 | Front cab door windows to have manual actuation. | 1 |
| 1550-0038-659 | (4) LED cab step area lighting. Locate each light on each cab door in the inboard position. Lights to be switched with door ajar. | 1 |
| 1550-0044 | All cab door kick plates to be made from diamond plate aluminum. | 1 |

| | | |
|---|---|---|
| 1550-0059-000-G6 | Reflective Red/Lemon Yellow printed striping positioned in the "A" formation located on the cab door panels. | 1 |
| 1550-0077 | Interior cab door locks - manual. Will have manual actuation from each respective door. Includes barrel style key lock on each exterior cab door. | 1 |
| 1550-0084 | All cab exterior access doors to have 1250 keyed locks. | 1 |
| MIRRORS | | |
| 1670-0003 | Velvac 2010 mirrors. Door mounted west coast style with remote control and heat. | 1 |
| MISC EXTERIOR CAB OPTIONS | | |
| 1550-0020 | Windows cab side fixed driver's side. | 1 |
| 1550-0033 | Windows cab side fixed officer's side. | 1 |
| 1675-0022 | Pair of 18" handrails located just behind driver and officer front door one each side. | 1 |
| 1675-0023 | Pair of 18" handrails located just behind driver and officer rear door (ALS doors if equipped) one each side. | 1 |
| 1675-0030 | Mud flaps, front, black with E-ONE logo. | 1 |
| 1675-0047 | Rear cab wall to be 3/16" aluminum diamond plate. | 1 |
| 1675-0202 | Mounting plate for battery charger receptacle, indicator and air inlet (if applicable). Plate to be removable brushed stainless steel. | 1 |
| HVAC | | |
| 1515-0017 | Air conditioning for the Typhoon X, CII X and Quest with Cummins ISC/ISL engine and radiator mounted condenser. | 1 |
| 1515-0053 | Controls for heating and air conditioning shall be located in the center dash area. (Lower area on Typhoon and CII with severe duty dash) | 1 |
| SEATS | | |
| 1510-0003 | Seats, Inc. brand 911 cab seats. | 1 |
| 1510-0008 | Seat color gray. | 1 |
| 1510-0035-147 | Universal air pack bottle bracket (EA). Location: officer's seat. | 1 |
| 1510-0035-148 | Universal air pack bottle bracket (EA). Location: rear facing driver's side. | 1 |
| 1510-0035-215 | Universal air pack bottle bracket (EA). Location: rear facing officer's side. | 1 |
| 1510-0038 | Driver seat 911 air ride. | 1 |
| 1510-0042 | Officer seat to be 911 fixed SCBA. | 1 |
| 1510-0050 | Rear facing 911 seat with SCBA driver's side. | 1 |
| 1510-0053 | Rear facing 911 seat with SCBA officer's side. | 1 |
| 1510-0234 | Seat cover material Turnout Tuff. | 1 |
| 1685-0031 | Seating capacity tag of four occupants. | 1 |
| MISC INTERIOR CAB OPTIONS | | |
| 1685-0000 | Cab interior gray. Does not include engine cover or seat color. | 1 |
| 1685-0005 | Lexan sun visors, driver and officer's side overhead. | 1 |
| 1685-0168 | ABS Dash package. Includes center and officer side dash, lower kick panels and "A" post covers. | 1 |
| 1685-0187 | Severe duty engine cover, molded polyurethane. | 1 |
| CAB ELECTRICAL OPTIONS | | |
| 1750-0013-172 | Turn signal Whelen 600 LED amber arrow pair located upper headlight bezel. | 1 |
| 1750-0024-179-04 | Auto-Eject receptacle inlet 20 amp located outside driver's door next to handrail with a Yellow cover. | 1 |
| 1750-0029 | Switch horn button two position DOT/air horn. | 1 |
| 1750-0046-195 | Cab Headlights. Position: lower. | 1 |
| 1750-0072-593 | 12 VDC (or 24VDC) electrical outlet in the cab wired battery hot. Location: officer side dash. | 2 |
| 1750-0075 | English dominant main cab gauge cluster. | 1 |
| 1750-0158 | Dome Lts Red/White LED. Package includes two lights mounted in the front and two mounted in the rear of the cab. White light wired through door and light assembly switch. Red light through light assembly switch. | 1 |
| 1750-0198-A31 | Battery charger to be located behind driver's seat. | 1 |
| 1750-0343 | Battery charger E-ONE LPC 20. 120 volt inlet, 20 amp output. | 1 |
| 1750-0435 | Halogen cab headlights. TyphoonX, CIIX and QST2 only. | 1 |
| 1750-0449 | Momentary DPF regeneration override switch. | 1 |

| | | |
|---|---|---|
| **BODY COMPT LEFT SIDE** | | |
| 3100-0153 | Driver side body with full height 42" wide forward and 56" wide rearward enhanced extended compartmentation. Includes (1) 56" wide compartment over the wheel well. | 1 |
| **BODY COMPT RIGHT SIDE** | | |
| 3120-0283 | Officer side body with full height 42" wide forward and 56" wide rearward enhanced extended compartmentation. Includes (1) 56" wide compartment over the wheel well and one (1) storage tunnel. | 1 |
| **BODY COMPT REAR** | | |
| 3110-0013 | Full Height Rear Compartment with Officer Side Storage Tunnel. Includes smooth plate panels and storage access door with push button latch. | 1 |
| 3110-0052 | Bolt-on diamond plate tailboard (full width of rear compartment). Includes the enhanced extended side compartment frame work and handrails- (2) vertical on trailing edge of body and horizontal mounted handrail(s) below hosebed. | 1 |
| 3110-0092 | Enhanced Extended Compartmentation stepped down below hosebed level. Includes embossed diamond plate compartment tops. | 1 |
| **DOORS** | | |
| 3300-0017-004 | Door roll up short (up to 45") with satin finish ROM. Location(s): L2. | 1 |
| 3300-0017-016 | Door roll up short (up to 45") with satin finish ROM. Location(s): R2. | 1 |
| 3300-0019-003 | Door roll up tall (greater than 45") with satin finish ROM. Location(s): L1. | 1 |
| 3300-0019-005 | Door roll up tall (greater than 45") with satin finish ROM. Location(s): L3. | 1 |
| 3300-0019-015 | Door roll up tall (greater than 45") with satin finish ROM. Location(s): R1. | 1 |
| 3300-0019-017 | Door roll up tall (greater than 45") with satin finish ROM. Location(s): R3. | 1 |
| 3300-0019-027 | Door roll up tall (greater than 45") with satin finish ROM. Location(s): B1. | 1 |
| **SHELVES** | | |
| 3370-0025-101 | Shelf, permanent shelf. Locate in R1 at offset (above extrusion if applicable). | 1 |
| 3370-0025-102 | Shelf, permanent shelf. Locate in R3 at offset (above extrusion if applicable). | 1 |
| 3370-0052-003 | Adjustable shelf (J-Style) for non-transverse compartments 16" or greater in depth. Location: L1. | 1 |
| 3370-0052-004 | Adjustable shelf (J-Style) for non-transverse compartments 16" or greater in depth. Location: L2. | 1 |
| 3370-0052-005 | Adjustable shelf (J-Style) for non-transverse compartments 16" or greater in depth. Location: L3. | 1 |
| 3370-0052-027 | Adjustable shelf (J-Style) for non-transverse compartments 16" or greater in depth. Location: B1. | 1 |
| 3370-0054-003 | Tracks for adjustable shelf and/or adjustable tray in compartments 16" or greater in depth. Location: L1. | 1 |
| 3370-0054-004 | Tracks for adjustable shelf and/or adjustable tray in compartments 16" or greater in depth. Location: L2. | 1 |
| 3370-0054-005 | Tracks for adjustable shelf and/or adjustable tray in compartments 16" or greater in depth. Location: L3. | 1 |
| 3370-0054-027 | Tracks for adjustable shelf and/or adjustable tray in compartments 16" or greater in depth. Location: B1. | 1 |
| **COVERS** | | |
| 3305-0007-000-02 | Vinyl Red hose bed cover with attached rear flap(s). | 1 |
| 3305-0008-000-02 | Vinyl Red crosslay cover with attached side flaps. | 1 |
| **PUMP MODULE** | | |
| 3130-0167 | Pump module to be 76" wide (side to side). Includes upper, lower, crosswalk, speedlay and tranverse module(s) if applicable. | 1 |
| 3130-0523 | Side mount pump module. Extruded aluminum with runningboards. | 1 |
| 3130-0532 | Pump panel opening is 39" wide. Pumper / tanker only. | 1 |
| 3130-0540 | Pump module height is 80". Pumper / tanker only. | 1 |
| **PUMP PANELS** | | |
| 3134-0016 | Stainless steel driver and officer side pump panels. | 1 |
| 3134-0064 | The gauge panel(s) on the driver side of the Side Mount module to be hinged upward. Panel(s) to | 1 |

| | | |
|---|---|---|
| | include (2) mechanical/pneumatic (as applicable to panel size) hold opens and latches. | |
| 3134-0143 | Officer side pump panel to be vertical hinged on forward extrusion. Panel to be (3) pieces with upper (2) panels secured in the closed position with push button latches. Upper panel to be held open with gas shock. | 1 |
| MISC PUMP PANEL OPTIONS | | |
| 4460-0003 | Pump panel tags color coded per NFPA compliance. | 1 |
| PUMP MODULE OPTIONS | | |
| 3136-0058 | E-ONE logo mounted one each side on pump module/preconnect panels. Logos to be sized as applicable to available space on panels. | 1 |
| 3136-0138 | Pump module storage pan. | 1 |
| 3136-0141 | Crosslay double 4.25" wide single stack to hold up to 200' of 2.0" DJ (each). | 1 |
| WATER TANK | | |
| 4010-0099 | Fill tower(s) to be located offset to officer side of water tank. | 1 |
| 4010-0177 | 780 Gallon "R" Water Tank. UPF Poly III color fill towers. Note: Any foam cell(s) and/or storage options through the tank will reduce the overall water capacity. | 1 |
| TANK PLUMBING | | |
| 4450-0010 | 2" tank fill Akron manual valve. | 1 |
| 4450-0119 | 3" tank to pump Akron manual valve w/4" tank connection. | 1 |
| LADDER STORAGE / RACKS | | |
| 3365-0028 | Hard Suction Storage Rack. Driver side compartment top. Includes spring hold downs and scuff plates behind spring mounts (as applicable). | 1 |
| 3365-0035 | Hard Suction Storage Rack. Officer side compartment top. Includes spring hold downs and scuff plates behind spring mounts (as applicable). | 1 |
| 3365-0049 | Brand of ladders capable of being carried on unit to be Alco-Lite. | 1 |
| 3365-0087-Z71 | The length of ladders capable of being stored shall be the following: 24' 2-section, 14' roof ladder and 10' attic ladder w/shoes. | 1 |
| 3365-0149-O97 | Storage tunnel capable of holding: (1) 2-section, (1) roof, (1) attic, (2) pike poles, (1) backboard in Officer. | 1 |
| HANDRAILS / STEPS | | |
| 3330-0277 | Innovative Controls dual lighted LED folding steps rear NFPA. Includes folding steps on driver side (staggered stepped as applicable with tailboard depth) for NFPA hosebed access and handrail mounted on driver side upper hosebed side (as applicable). | 1 |
| 3330-0279-060 | Innovative Controls dual lighted LED folding step. Location: officer side front compartment face. Each location requires a minimum of (1) handrail per NFPA. | 4 |
| 3330-0279-062 | Innovative Controls dual lighted LED folding step. Location: driver side front compartment face. Each location requires a minimum of (1) handrail per NFPA. | 4 |
| MISC BODY OPTIONS | | |
| 3340-0004 | Hosebed above the booster tank. Includes forward hosebed and tower(s) cover plate work (as applicable). Hosebed adjustable divider extrusion rearward of the furthest tower is to run full width of the hosebed (as is practical with other hosebed mounted equipment). | 1 |
| 3340-0015 | Diamond plate single axle wheel well. Includes bolt-on composite wheel well liners and aluminum trim fenderettes. | 1 |
| 3340-0035 | Divider Long. To run full length of hose bed (front to rear). | 1 |
| 3340-0058 | Recessed fuel fill driver side wheel well. | 1 |
| 3340-0074 | Body mainframe and hosebed side assemblies for a 85" high body. | 1 |
| 3340-0093 | Mud flaps, rear, black with E-ONE logo. | 1 |
| 3340-0110 | The rear of each hose bed divider to have a hand hold cut-out(s). | 1 |
| 3340-0145 | Rub rail for the body and pump area module(s). | 1 |
| 3340-0681 | Body mainframe layout line to be 24". Includes body and all applicable modules. | 1 |
| SCBA BOTTLE STORAGE | | |
| 3320-0100 | Strap(s), loop style to retain SCBA bottle(s). Locate one per bottle in each exterior storage compartment. | 1 |

| | | |
|---|---|---|
| 3320-0187-495 | Cast Products brand (1) SCBA bottle storage with gasketed door and push button latch. Door shall NOT cover the recessed fuel fill if located adjacent to the SCBA storage. Location: driver side rear wheel well offset forward | 1 |
| 3320-0187-497 | Cast Products brand (1) SCBA bottle storage with gasketed door and push button latch. Door shall NOT cover the recessed fuel fill if located adjacent to the SCBA storage. Location: driver side rear wheel well offset rearward | 1 |
| 3320-0187-498 | Cast Products brand (1) SCBA bottle storage with gasketed door and push button latch. Door shall NOT cover the recessed fuel fill if located adjacent to the SCBA storage. Location: officer side rear wheel well offset forward | 1 |
| 3320-0187-500 | Cast Products brand (1) SCBA bottle storage with gasketed door and push button latch. Door shall NOT cover the recessed fuel fill if located adjacent to the SCBA storage. Location: officer side rear wheel well offset rearward | 1 |

| PUMPS | | |
|---|---|---|
| 4005-0030 | Rating 1250 GPM | 1 |
| 4005-0195 | Hale QFLO 750-1250 GPM pump, single stage. Requires primer option. | 1 |

| PUMP CERTIFICATION | | |
|---|---|---|
| 4475-0000 | Pump certification 750-2250 GPM | 1 |

| PUMP OPTIONS | | |
|---|---|---|
| 4015-0008 | Zinc anodes for Hale pump (PR), (1) discharge side and (1) intake side. | 1 |
| 4015-0052-198 | Steamers to be Flush. Location: driver's side. | 1 |
| 4015-0052-199 | Steamers to be Flush. Location: officer's side. | 1 |
| 4015-0098 | Manual operated master pump drain. The master drain shall be clearly marked and placed in accessible location on pump panel. | 1 |
| 4015-0210 | Pump cooler with Innovative Control 1/4 turn valve with "T" handle and label. | 1 |
| 4015-0238 | Hale electric primer (oil-less). | 1 |

| INTAKES | | |
|---|---|---|
| 4440-0005 | 2.5" Left Intake Akron Manual Valve. | 1 |

| INTAKE OPTIONS | | |
|---|---|---|
| 4445-0016 | Intake relief valve, Hale 2.5". | 1 |

| DISCHARGES AND PRECONNECTS | | |
|---|---|---|
| 4415-0012-654 | 1.5" Crosslay with Akron manual valve. Location: crosslay 1 & 2. | 2 |
| 4415-0014-581 | 2.5" Left Pump Panel Discharge Akron Manual Valve. Location: left side discharge 1. | 1 |
| 4415-0014-582 | 2.5" Left Pump Panel Discharge Akron Manual Valve. Location: left side discharge 2. | 1 |
| 4415-0022-350 | 2.5" Left Rear Discharge Akron Manual Valve. Location: left rear discharge. | 1 |
| 4415-0041 | 3" Deck Gun Discharge, Akron manual valve. | 1 |
| 4415-0054-583 | 4" Right Pump Panel Discharge with 3" Akron Manual Valve (Waterous pumps noted location to be forward lower port). Location: right side discharge 1. | 1 |
| 4417-0106-L65 | Deck gun piping to be positioned centered in deck gun channel. | 1 |

| DISCHARGE OPTIONS | | |
|---|---|---|
| 4417-0175 | Innovative Controls push/pull valve controls with locking T handles. | 1 |
| 4417-0176 | Innovative Controls 3/4" bleeder/drain valve include lift lever with ergonomic grip. | 7 |
| 4417-0185 | Innovative Controls discharge and intake bezels with integral color code and verbiage for side mount pump panel. | 1 |

| PRESSURE GOVERNORS | | |
|---|---|---|
| 4465-0011 | Class 1 TPG pressure governor. Includes, water, oil, volt and tachometer. | 1 |

| GAUGES | | |
|---|---|---|
| 4435-0083 | Innovative Controls 10 LED SL series water tank level gauge. On pump panel. | 1 |
| 4435-0246 | 2.5" Innovative Controls stainless steel case pressure gauge (0-400) with color code bezel. | 7 |
| 4435-0247 | 4" Innovative Controls stainless steel case master pressure gauges with bezel. Intake 30-0-400, and discharge 0-400. | 1 |

| | | |
|---|---|---|
| **ELECTRICAL SYSTEMS** | | |
| 5010-0013-Y83 | Vehicle data recorder - 2009 / 2016 NFPA compliant. Includes occupant detection with display. Display location: inboard on driver's side overhead console. | 1 |
| 5010-0036 | V-MUX Electrical system for pumper / tanker / rescue. | 1 |
| 5010-0059-339 | VFD Text display for V-MUX electrical system. Location: center of dash. | 1 |
| **LIGHT BARS** | | |
| 5300-0504 | Whelen MKEZ7 1.5" standard mount for front light bar (PR). | 1 |
| 5300-0506-000-4V | Light bar LED color: Red/White with clear lenses | 1 |
| 5300-0511 | Light bar Whelen Freedom IV Model F4X7 72" with 8 LED modules. Location: Centered on the front cab roof. | 1 |
| **WARNING LIGHT PACKAGES** | | |
| 5550-0059-535 | Whelen Super LED lower level warning light package. Includes (8) red 600 LED light heads and (2) red 500 LED light heads w/chrome flanges. Locate side facing lights: at forward most position, centered in rear wheel well, and side facing at rear of body in rubrail if equipped. | 1 |
| **WARNING LIGHTS** | | |
| 5600-0078-479-06 | Whelen Super LED beacon (PR) model L31H with Red domes. Location rear upper body on aerial style brackets. | 1 |
| 5600-0105-170 | Hazard (door ajar) light 2" LED. Location: center overhead. | 1 |
| **SIRENS** | | |
| 5500-0015 | Whelen model 295SLSA1 siren with microphone (replaced 295HFSA1). | 1 |
| 5500-0024-170 | The electronic siren control is to be located on the center overhead. | 1 |
| **SPEAKERS** | | |
| 5510-0029-209 | Speaker, Federal Signal Dynamax ES100 with "E-ONE" grille through bumper. Location: driver side front bumper. | 1 |
| **DOT LIGHTING** | | |
| 5150-0007 | Whelen 600 series LED vertical mount tail lights. Includes LED stop/tail, arrow turn and halogen back-up lights with vertical Cast 3 housing and weatherproof connectors. | 1 |
| 5150-0017 | License plate light LED with chrome housing located at the rear of the body. | 1 |
| 5150-0025 | Marker light LED body/cab package. E-One custom cab and pumper or tanker body only. | 1 |
| 5150-0032 | Bracket license plate at rear of body. | 1 |
| **LIGHTS - COMPARTMENT, STEP & GROUND** | | |
| 5380-0077 | Compartment light package Amdor Luma-Bar LED for medium bodies. Includes one light per compartment (two if transverse). | 1 |
| 5380-0200 | Ground light package EON LED - small. | 1 |
| **LIGHTS - DECK AND SCENE** | | |
| 5390-0058-395 | Deck Lights - Truck-Lite LED model 81380 (PR). Location: rear body/beavertail area on the trailing edge up high. | 1 |
| 5390-0076 | Hose bed light Truck-Lite LED model 81380. Locate at front of hose bed. Switched with work light switch in cab. | 1 |
| 5390-0102 | Crosslay light Truck-Lite LED model 81380. Locate to rear of crosslay (SM) and forward of crosslay (TM as applicable). Switched with work light switch in cab. | 1 |
| **LIGHTS - NON-WARNING** | | |
| 5400-0003 | Engine compartment light (EA). | 1 |
| 5400-0010 | Incandescent pump compartment light (EA). | 1 |
| 5400-0054 | Spotlight Specialty 2150 hand held located on officer's side of cab dash w/12V receptacle. | 1 |
| 5400-0092 | Weldon pump panel LED light package with (3) lights per side pump panel. Pump panels over 45" may require additional lights. Side mount only. | 1 |
| **CONTROLS / SWITCHES** | | |
| 5100-0000-199 | Foot switch to control air horns located officer's side. | 1 |

| | | |
|---|---|---|
| 5100-0007-198 | Foot switch to control electronic siren located driver's side. | 1 |
| **MISC ELECTRICAL** | | |
| 1750-0082-762 | 12V power distribution module. Includes (6) battery hot and (6) switched hot circuits. 100 amps max (IATS). Location: behind officer's seat. | 1 |
| 5110-0017 | Back-up alarm 97 dB. | 1 |
| **LIGHTS - QUARTZ** | | |
| 5450-0290-407 | Light Whelen Pioneer model PFP1 12V with internal top raise pole mount. Includes switch accessible to driver. Location: driver side of pump module forward area. | 1 |
| 5450-0290-408 | Light Whelen Pioneer model PFP1 12V with internal top raise pole mount. Includes switch accessible to driver. Location: officer side of pump module forward area. | 1 |
| **ELBOWS** | | |
| 7400-0004 | Elbow 30 degree chrome swivel w/2.5"FNST x 2.5"MNST. | 3 |
| **ADAPTERS** | | |
| 7200-0026 | Swivel Connector 4" FNST x 5" Storz 30 Deg Elbow with Tethered Cap. | 1 |
| **HAND TOOLS** | | |
| 7600-0005 | Pike Pole Fiberglass 6'. | 1 |
| 7600-0007 | Pike Pole Fiberglass 10'. | 1 |
| **HOSE / NOZZLES** | | |
| 7700-0004 | Hard suction hose 6" X 10' with Pyrolite couplings. | 2 |
| **GROUND LADDERS** | | |
| 7800-0007 | Alco-Lite PRL-14' roof ladder. | 1 |
| 7800-0016 | Alco-Lite PEL-24' 2-section extension ladder. | 1 |
| 7800-0032 | Alco-Lite FL-10, 10' folding ladder w/safety shoes. | 1 |
| **MISC LOOSE EQUIPMENT** | | |
| 7900-0010 | Chrome Barrel Strainer 6" NST. | 1 |
| 7900-0014 | DOT Required Drive Away Kit - Kit includes three (3) triangular warning reflectors with carrying case. This kit is for the end user and is to remain with the truck. | 1 |
| **EXTERIOR PAINT** | | |
| 8100-0071 | Undercoating E-ONE. | 1 |
| 8100-0089 | All applicable pump/pre-connect application modules are to have a sanded finish (not painted job color). Includes upper and lower pump modules, crosswalk module and/or speedlay/pre-connect module (as applicable). Rear mounted body/pump module to be painted job color. | 1 |
| 8100-0116 | Rear body surface to have a sanded finish (not painted job color). Includes hinged doors that do not have discrete sales codes and removable panels. | 1 |
| 8100-0176-000-17 | Paint E-ONE chassis cab - Sikkens paint. Color: FLNA3225E-1 Red. | 1 |
| 8100-0182-000-17 | Paint Body - Small - For Pumpers, Rear Mounts, S/A Tankers/Wetsides and Rescues. Sikkens paint. Color: FLNA3225E-1 Red. | 1 |
| 8100-0186-000-39 | Paint exterior surface of outer steel wheels. Sikkens paint. Color: Job Color. | 1 |
| **INTERIOR PAINT** | | |
| 8150-0011 | The interior of the cab to be painted Zolatone gray. | 1 |
| **STRIPING** | | |
| 8300-0002-334-12 | NFPA Scotchlite Stripe - 4" wide and straight on front/sides of cab and sides/rear of body. Color: White. Location: bottom of stripe flush with top of bumper and straight back. | 1 |
| 8300-0042 | White rubrail scotchlite insert. | 1 |
| 8300-0084-000-72 | Chevron "A" style 6" printed sheet Scotchlite striping full width on rear of body. Includes rear facing extrusions, panels and doors. Colors to be Yellow/Red. | 1 |
| 8300-0313 | Yellow line to indicate designated standing / walking areas above 48" high in compliance with 2016 NFPA 1901. Line to be 1" wide. Steps, ladders and areas with a railing or structure at least 12" high are excluded from requiring the line. | 1 |

| WARRANTY / STANDARD & EXTENDED | | |
|---|---|---|
| 9100-0000 | Standard 1 Year Warranty. | 1 |
| 9100-0003 | Lifetime Frame Warranty. | 1 |
| 9100-0004 | 10 Year/100,000 Mile Structural Warranty for Alum Cab / Body - Statement of Warranty. | 1 |
| 9100-0005 | 10 Year Stainless Steel Plumbing Warranty - Statement of Warranty. | 1 |
| 9100-0019 | 10 Year Limited Paint and Perforation Warranty - For Sikkens Paint. | 1 |
| 9100-0090 | 25 Year frame rail corrosion warranty. Includes liners (if equipped). | 1 |

| SUPPORT, DELIVERY, INSPECTIONS AND MANUALS | | |
|---|---|---|
| 9300-0009 | Manuals, Operator and Service CD-ROM. | 1 |
| 9300-0016 | Approval Drawings-Standard. | 1 |
| 9300-0316 | Fire Apparatus Safety Guide published by FAMA, latest edition. | 1 |

PRICE - 2017 E-ONE RESCUE PUMPER - TYPHOON CHASSIS - $364,239

# STATE OF OHIO TERM SCHEDULE

## 4200 SURFACE RD
## COLUMBUS, OH 43228

*Quote No: 57487*

8/27/2016

Quote Rev:27 Drawing Rev:7

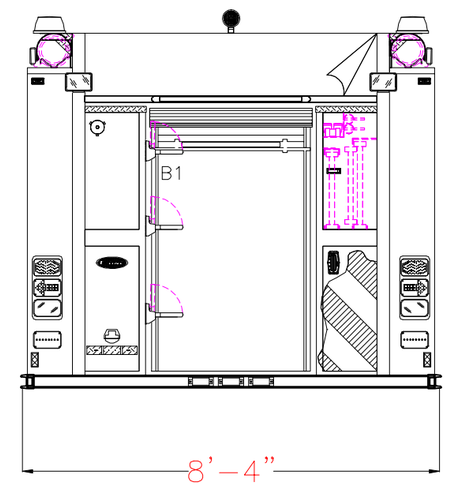


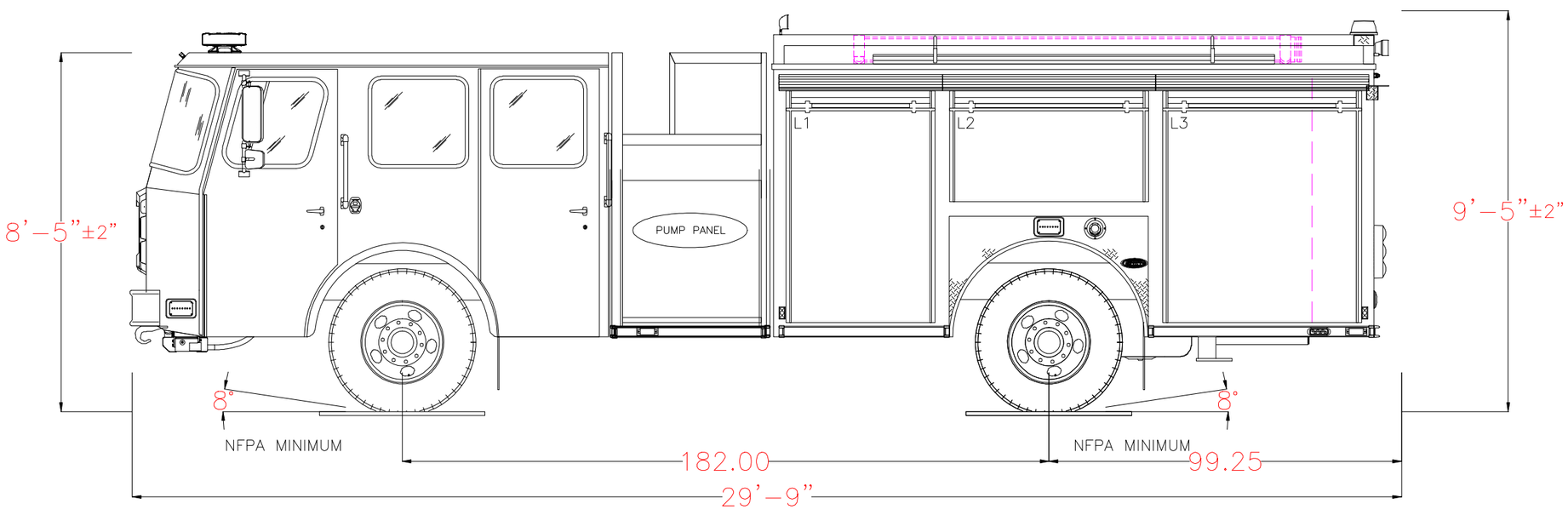


POWERED BY EZDRAW

Notice: This drawing provides a GENERAL REPRESENTATION of the vehicle configuration and should be used for evaluation purposes. The respective dimensions shown,including overall height and length, are estimates and may vary due to manufacturing processes. All other items such as lighting and fixtures, plumbing, compartmentation, and other generally assembled details are shown for REFERENCE ONLY and may not be a direct reflection of the final truck configuration. In ALL situations where this drawing may conflict with the specifications, THE SPECIFICATIONS, AS REFLECTED IN THE APPROVED SHOP ORDER, SHALL PREVAIL. Unless otherwise specified, the proposed apparatus will be manufactured to the latest NFPA recommendations as well as other applicable federally regulated safety regulations. E-One reserves the right to engineer and incorporate design improvements and changes without notice, while adhering to the intent of the specification.

| 1250 GPM PUMP<br>0 TOTAL VOLUME<br>0 TOTAL FOAM | HOSE LOADS : |
|---|---|
| | |
| | |
| | |
| | |

| | OPENING | | INTERIOR DIMENSIONS | | | | |
|---|---|---|---|---|---|---|---|
| COMPT. | WIDTH | HEIGHT | WIDTH | LOWER HEIGHT | LOWER DEPTH | UPPER HEIGHT | UPPER DEPTH |
| L1 | 40 | 59.75 | 42 | 30 | 26 | 26.75 | 26 |
| L2 | 54 | 25.75 | 56 | N/A | N/A | 26.75 | 26 |
| L3 | 54 | 59.75 | 56 | 30 | 26 | 26.75 | 26 |
| R1 | 40 | 59.75 | 42 | 30 | 26 | 26.75 | 12 |
| R2 | 54 | 25.75 | 56 | N/A | N/A | 26.75 | 12 |
| R3 | 54 | 59.75 | 56 | 30 | 26 | 26.75 | 12 |
| B1 | 36 | 45 | 38 | 30 | 26 | N/A | N/A |

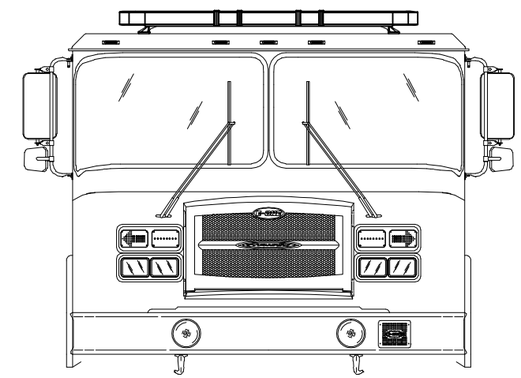

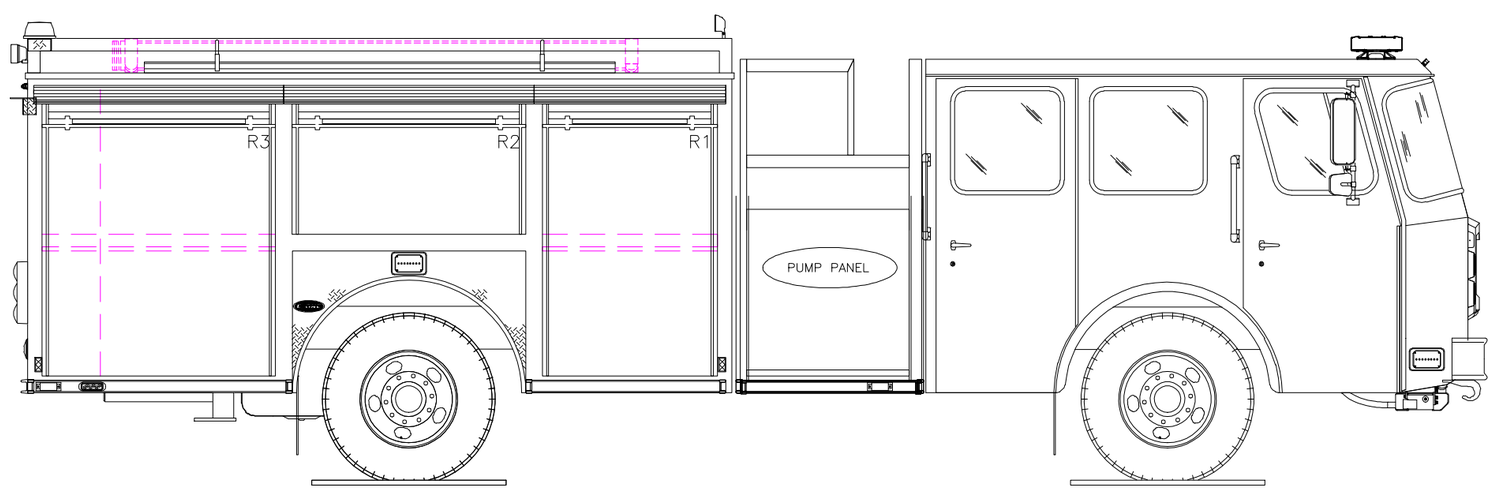


POWERED BY EZDRAW

Fire Apparatus Quotation for:
STATE OF OHIO TERM SCHEDULE

Quotation Number: 57489 Rev: 31

Unit Description: PAEM-TYPH
Quote Description: Pumper, Aluminum, eMAX, Typhoon

| Salescode | Extended Description | Qty |
|---|---|---|
| **TESTING COMPLIANCE STANDARD** | | |
| 1001-0065 | The E-ONE supplied components of the vehicle shall meet the requirements of NFPA 1901, 2016 edition. | 1 |
| 3090-0002 | OAH. Unit has no overall height restrictions. | 1 |
| 3090-0004 | OAL. Unit has no overall length restrictions. | 1 |
| 3090-0007 | Hosebed hoseload allowance on the apparatus shall be 1200 lbs. | 1 |
| 3340-1137-12C | Equipment allowance on the apparatus shall be 2500 lbs. This allowance is in addition to the weight of the hoses and ground ladders listed in the shop order as applicable. | 1 |
| **BUMPERS** | | |
| 1160-0000 | Bumper 10" stainless steel. | 1 |
| 1160-0011 | 4" Front Bumper Extension. | 1 |
| **FRAME ASSEMBLY** | | |
| 1250-0011 | Rear underbody support frame. | 1 |
| 1250-0080 | Frame assembly with 10.25 x 3.5 x .375 powder coated galvanized rails. | 1 |
| **AXLE OPTIONS** | | |
| 1025-0017 | Meritor RS-25-160 single rear axle 27,000 lb. capacity. | 1 |
| 1025-0029 | Front shock absorbers. | 1 |
| 1025-0174 | Meritor FL941 front axle 18,000 lb. | 1 |
| **SUSPENSIONS** | | |
| 1070-0001 | Rear suspension springs rated equal to the capacity of the axle. | 1 |
| **WHEEL OPTIONS** | | |
| 1050-0000 | Steel wheels for front axle (2). | 1 |
| 1050-0002 | Steel wheels for rear axle (4). | 1 |
| 1050-0007 | Front axle wheel trim kit. Includes stainless steel lug nut covers (chrome plated plastic if applicable) and center cap with E-ONE logo. Note: Center cap will have an inspection port IPO a logo if equipped with Stemco oil seals. | 1 |
| 1050-0008 | Rear axle (single) wheel trim kit. Includes stainless steel lug nut covers (chrome plated plastic if applicable) and center cap with E-ONE logo. E-ONE custom chassis w/steel wheels will have chrome plated plastic lug covers. | 1 |
| **TIRE OPTIONS** | | |
| 1060-0001 | Two Michelin 315 tires model XZA-1 for front axle. | 1 |
| 1060-0016 | Four Michelin 12R rear tires with XDN2 mud and snow tread. | 1 |
| 1060-0117 | RWC AirGuard LED tire pressure monitoring valve stem caps (6) for single rear axle applications. | 1 |
| **BRAKE SYSTEMS** | | |
| 1100-0000 | 16-1/2" x 6" S-cam brakes with ArvinMeritor automatic slack adjusters for front axle. | 1 |
| 1100-0002 | ArvinMeritor 16-1/2" x 7" S-cam brakes with cast brake drums for a single rear axle. | 1 |
| 1100-0005 | Brake system air 4X2/4X4. | 1 |
| 1100-0006 | Parking brake release mounted on the driver's side lower dash. | 1 |
| **AIR SYSTEM OPTIONS** | | |

| | | |
|---|---|---|
| 1110-0000-001 | Inlet for air system. Location: driver door jamb. | 1 |
| 1110-0002 | Air dryer Bendix AD-9. | 1 |
| 1110-0006 | Air lines nylon. | 1 |
| 1110-0041 | Air horns Grover recessed in bumper (PR). | 1 |
| **ENGINES & TRANSMISSIONS** | | |
| 1200-0017 | Push-button transmission shift selector. | 1 |
| 1200-0020 | TransSynd synthetic transmission fluid for EVS3000. | 1 |
| 1200-0097 | Electronic limiting of speed to 68 MPH maximum. Note: Max speed may be set at 65 MPH due to tire rating. | 1 |
| 1200-0310 | Eng/Trans Cummins ISL 350HP/EVS3000 2016 EPA compliant engine. | 1 |
| **SECONDARY BRAKING** | | |
| 1125-0002 | Jacobs engine compression brake. | 1 |
| 1125-0023 | Transmission to seek second gear when Jacobs engine brake or Telma retarder is engaged. N/A with Trans retarder. | 1 |
| **COOLING PACKAGE** | | |
| 1800-0013 | Cooling system for use with Cyclone II X, Typhoon X, and Quest chassis. For use with 2010 / 2013 / 2016 EPA engines. Includes coolant recovery system. | 1 |
| **FUEL SYSTEMS** | | |
| 1350-0003 | Fuel system 50 gallon. | 1 |
| 1350-0012-670 | Fuel shut-off valve. Location: one (1) inlet side of OEM fuel filter. | 1 |
| 1350-0022 | Fuel line hose rubber. | 1 |
| **ALTERNATOR** | | |
| 1700-0003 | Alternator Leece Neville 270 amp SAE, 240 amp NFPA rating. | 1 |
| **BATTERIES** | | |
| 1400-0002 | Battery four group 31 1000 CCA. | 1 |
| **CHASSIS OPTIONS** | | |
| 1680-0005 | Thermatic fan clutch. | 1 |
| 1680-0006 | Drivelines 1710. | 1 |
| 1680-0008 | Tow eyes front painted below bumper/cab (PR). | 1 |
| 1680-0011 | Tow eyes rear below body, painted. | 1 |
| 1680-0250-M58 | Diesel Exhaust Fluid (DEF) 5 gallon tank for 2013 / 2016 EPA engines. Location: left side below rear of cab. | 1 |
| 1680-0284 | Radiator mounted power steering cooler. | 1 |
| **CAB MODEL** | | |
| 1520-0013 | Typhoon X medium cab with 58" CA | 1 |
| **CAB ROOF TYPE** | | |
| 1615-0007 | Delete rear vista roof windows. | 1 |
| 1615-0010 | Cab roof to be "flat" (non-vista). | 1 |
| **CAB BADGE PACKAGE** | | |
| 1610-0000 | Cab and body to have applicable E-ONE logos. | 1 |
| **GRILLE** | | |
| 1620-0004 | ABS chrome plated grille. | 1 |
| **CAB DOOR OPTIONS** | | |
| 1550-0003 | Rear crew cab doors in the medium position. | 1 |
| 1550-0005 | Driver and officer cab door windows. Include forward vent windows. | 1 |
| 1550-0011 | Rear crew cab door windows. Includes manual roll-down actuation. Not available on Typhoon or CII with paddle style door latching. | 1 |
| 1550-0016 | Cab door panels ABS. | 1 |
| 1550-0025 | All cab doors shall have "L" style exterior latches. | 1 |
| 1550-0027 | Front cab door windows to have manual actuation. | 1 |
| 1550-0038-659 | (4) LED cab step area lighting. Locate each light on each cab door in the inboard position. Lights to be | 1 |

| | | |
|---|---|---|
| | switched with door ajar. | |
| 1550-0044 | All cab door kick plates to be made from diamond plate aluminum. | 1 |
| 1550-0059-000-G6 | Reflective Red/Lemon Yellow printed striping positioned in the "A" formation located on the cab door panels. | 1 |
| 1550-0077 | Interior cab door locks - manual. Will have manual actuation from each respective door. Includes barrel style key lock on each exterior cab door. | 1 |
| 1550-0083 | All cab exterior access doors to have CH751 keyed locks. | 1 |

| MIRRORS | | |
|---|---|---|
| 1670-0003 | Velvac 2010 mirrors. Door mounted west coast style with remote control and heat. | 1 |

| MISC EXTERIOR CAB OPTIONS | | |
|---|---|---|
| 1550-0020 | Windows cab side fixed driver's side. | 1 |
| 1550-0033 | Windows cab side fixed officer's side. | 1 |
| 1675-0022 | Pair of 18" handrails located just behind driver and officer front door one each side. | 1 |
| 1675-0023 | Pair of 18" handrails located just behind driver and officer rear door (ALS doors if equipped) one each side. | 1 |
| 1675-0030 | Mud flaps, front, black with E-ONE logo. | 1 |
| 1675-0047 | Rear cab wall to be 3/16" aluminum diamond plate. | 1 |
| 1675-0202 | Mounting plate for battery charger receptacle, indicator and air inlet (if applicable). Plate to be removable brushed stainless steel. | 1 |

| HVAC | | |
|---|---|---|
| 1515-0017 | Air conditioning for the Typhoon X, CII X and Quest with Cummins ISC/ISL engine and radiator mounted condenser. | 1 |
| 1515-0053 | Controls for heating and air conditioning shall be located in the center dash area. (Lower area on Typhoon and CII with severe duty dash) | 1 |

| SEATS | | |
|---|---|---|
| 1510-0003 | Seats, Inc. brand 911 cab seats. | 1 |
| 1510-0008 | Seat color gray. | 1 |
| 1510-0035-147 | Universal air pack bottle bracket (EA). Location: officer's seat. | 1 |
| 1510-0035-148 | Universal air pack bottle bracket (EA). Location: rear facing driver's side. | 1 |
| 1510-0035-215 | Universal air pack bottle bracket (EA). Location: rear facing officer's side. | 1 |
| 1510-0038 | Driver seat 911 air ride. | 1 |
| 1510-0042 | Officer seat to be 911 fixed SCBA. | 1 |
| 1510-0050 | Rear facing 911 seat with SCBA driver's side. | 1 |
| 1510-0053 | Rear facing 911 seat with SCBA officer's side. | 1 |
| 1510-0234 | Seat cover material Turnout Tuff. | 1 |
| 1685-0031 | Seating capacity tag of four occupants. | 1 |

| MISC INTERIOR CAB OPTIONS | | |
|---|---|---|
| 1685-0000 | Cab interior gray. Does not include engine cover or seat color. | 1 |
| 1685-0005 | Lexan sun visors, driver and officer's side overhead. | 1 |
| 1685-0168 | ABS Dash package. Includes center and officer side dash, lower kick panels and "A" post covers. | 1 |
| 1685-0187 | Severe duty engine cover, molded polyurethane. | 1 |

| CAB ELECTRICAL OPTIONS | | |
|---|---|---|
| 1750-0013-172 | Turn signal Whelen 600 LED amber arrow pair located upper headlight bezel. | 1 |
| 1750-0024-179-04 | Auto-Eject receptacle inlet 20 amp located outside driver's door next to handrail with a Yellow cover. | 1 |
| 1750-0029 | Switch horn button two position DOT/air horn. | 1 |
| 1750-0046-195 | Cab Headlights. Position: lower. | 1 |
| 1750-0072-593 | 12 VDC (or 24VDC) electrical outlet in the cab wired battery hot. Location: officer side dash. | 2 |
| 1750-0075 | English dominant main cab gauge cluster. | 1 |
| 1750-0158 | Dome Lts Red/White LED. Package includes two lights mounted in the front and two mounted in the rear of the cab. White light wired through door and light assembly switch. Red light through light assembly switch. | 1 |
| 1750-0198-A31 | Battery charger to be located behind driver's seat. | 1 |

| | | |
|---|---|---|
| 1750-0343 | Battery charger E-ONE LPC 20. 120 volt inlet, 20 amp output. | 1 |
| 1750-0435 | Halogen cab headlights. TyphoonX, CIIX and QST2 only. | 1 |
| 1750-0449 | Momentary DPF regeneration override switch. | 1 |

| BODY COMPT LEFT SIDE | | |
|---|---|---|
| 3100-0245 | Driver side body with full height 60" wide forward and 56" wide rearward compartmentation. Includes (1) 56" wide compartment over the wheel well. Side Mount eMAX only. | 1 |

| BODY COMPT RIGHT SIDE | | |
|---|---|---|
| 3120-0403 | Officer side body with full height 60" wide forward and 56" wide rearward compartmentation. Includes (1) 56" wide compartment over the wheel well and one (1) storage tunnel located behind the upper (3) compartment back walls. | 1 |

| BODY COMPT REAR | | |
|---|---|---|
| 3110-0013 | Full Height Rear Compartment with Officer Side Storage Tunnel. Includes smooth plate panels and storage access door with push button latch. | 1 |
| 3340-0102 | Angled (Boston style) style tailboard corners. | 1 |
| 3340-0319 | Bolt-on diamond plate 10" tailboard (full width of body). For use with rear ladder application. Includes handrails- (1) vertical on trailing edge of body opposite side of ladder and handrail(s) horizontal below hosebed. | 1 |

| BODY MODULE FRONT | | |
|---|---|---|
| 3125-0005 | eMAX Forward body configuration - SM. Includes a lower double preconnect storage area, upper transverse storage area, rack in upper storage area for (2) backboards (vertical stored offset forward - sleeve each side of center pump access), center front pump access doors and removable center floor in upper area. | 1 |

| DOORS | | |
|---|---|---|
| 3300-0017-004 | Door roll up short (up to 45") with satin finish ROM. Location(s): L2. | 1 |
| 3300-0017-016 | Door roll up short (up to 45") with satin finish ROM. Location(s): R2. | 1 |
| 3300-0019-003 | Door roll up tall (greater than 45") with satin finish ROM. Location(s): L1. | 1 |
| 3300-0019-005 | Door roll up tall (greater than 45") with satin finish ROM. Location(s): L3. | 1 |
| 3300-0019-015 | Door roll up tall (greater than 45") with satin finish ROM. Location(s): R1. | 1 |
| 3300-0019-017 | Door roll up tall (greater than 45") with satin finish ROM. Location(s): R3. | 1 |
| 3300-0019-027 | Door roll up tall (greater than 45") with satin finish ROM. Location(s): B1. | 1 |

| SHELVES | | |
|---|---|---|
| 3370-0025-101 | Shelf, permanent shelf. Locate in R1 at offset (above extrusion if applicable). | 1 |
| 3370-0025-102 | Shelf, permanent shelf. Locate in R3 at offset (above extrusion if applicable). | 1 |
| 3370-0052-003 | Adjustable shelf (J-Style) for non-transverse compartments 16" or greater in depth. Location: L1. | 1 |
| 3370-0052-004 | Adjustable shelf (J-Style) for non-transverse compartments 16" or greater in depth. Location: L2. | 1 |
| 3370-0052-005 | Adjustable shelf (J-Style) for non-transverse compartments 16" or greater in depth. Location: L3. | 1 |
| 3370-0052-027 | Adjustable shelf (J-Style) for non-transverse compartments 16" or greater in depth. Location: B1. | 1 |
| 3370-0053-579 | Adjustable shelf (C-Style) for non-transverse compartments up to 15.99" in depth. Location: B1 upper. | 1 |
| 3370-0054-003 | Tracks for adjustable shelf and/or adjustable tray in compartments 16" or greater in depth. Location: L1. | 1 |
| 3370-0054-004 | Tracks for adjustable shelf and/or adjustable tray in compartments 16" or greater in depth. Location: L2. | 1 |
| 3370-0054-005 | Tracks for adjustable shelf and/or adjustable tray in compartments 16" or greater in depth. Location: L3. | 1 |
| 3370-0054-027 | Tracks for adjustable shelf and/or adjustable tray in compartments 16" or greater in depth. Location: B1. | 1 |
| 3370-0055-579 | Tracks for adjustable shelf in shallow compartments up to 15.99" deep. Location: B1 upper. | 1 |

| COVERS |
|---|

| | | |
|---|---|---|
| 3305-0007-000-02 | Vinyl Red hose bed cover with attached rear flap(s). | 1 |
| 3305-0016-000-02 | Vinyl Red speedlay side covers. | 1 |
| **PUMP PANELS** | | |
| 3134-0079 | The side pump intake / discharge panels to be stainless steel. eMAX only. | 1 |
| 3134-0080 | Pump operator control panel in driver side forward body compartment to be stainless steel. eMAX only. | 1 |
| 3134-0095 | The upper gauge panel on the enclosed pump panel is to be hinged forward. Side mount eMAX only. | 1 |
| **MISC PUMP PANEL OPTIONS** | | |
| 4460-0003 | Pump panel tags color coded per NFPA compliance. | 1 |
| 4460-0058 | Push-pull handles on the pump operator's panel to be oriented vertical. eMAX only. | 1 |
| **PUMP MODULE OPTIONS** | | |
| 3136-0058 | E-ONE logo mounted one each side on pump module/preconnect panels. Logos to be sized as applicable to available space on panels. | 1 |
| 3136-0205 | Removable Aluminum Speedlay Tray(s) with slotted floor to prevent the accumulation of water and allow for ventilation of wet hose. Includes vertical slotted hand hold cutouts on each end to facilitate easy removal of the hose tray. No lip, No grab rod. | 2 |
| **WATER TANK** | | |
| 4010-0099 | Fill tower(s) to be located offset to officer side of water tank. | 1 |
| 4010-0177 | 780 Gallon "R" Water Tank. UPF Poly III color fill towers. Note: Any foam cell(s) and/or storage options through the tank will reduce the overall water capacity. | 1 |
| **TANK PLUMBING** | | |
| 4450-0010 | 2" tank fill Akron manual valve. | 1 |
| 4450-0121 | 3" Tank to pump Akron air actuated valve w/4" tank connection. | 1 |
| **LADDER STORAGE / RACKS** | | |
| 3365-0028 | Hard Suction Storage Rack. Driver side compartment top. Includes spring hold downs and scuff plates behind spring mounts (as applicable). | 1 |
| 3365-0035 | Hard Suction Storage Rack. Officer side compartment top. Includes spring hold downs and scuff plates behind spring mounts (as applicable). | 1 |
| 3365-0049 | Brand of ladders capable of being carried on unit to be Alco-Lite. | 1 |
| 3365-0087-Z71 | The length of ladders capable of being stored shall be the following: 24' 2-section, 14' roof ladder and 10' attic ladder w/shoes. | 1 |
| 3365-0149-O97 | Storage tunnel capable of holding: (1) 2-section, (1) roof, (1) attic, (2) pike poles, (1) backboard in Officer. | 1 |
| **HANDRAILS / STEPS** | | |
| 3110-0099-524 | NFPA hose bed access ladder. Zico model RL12 for increased visibility of rear outboard body mounted DOT/NFPA lighting. Includes required step lights and additional hand rail(s) if applicable. Location: rear of body driver side. | 1 |
| 3330-0158 | Step below side intake / discharge panel (PR). Gator grip diamond plate. Each location requires a minimum of (1) handrail / handhold per NFPA. eMAX only. | 1 |
| **MISC BODY OPTIONS** | | |
| 3340-0004 | Hosebed above the booster tank. Includes forward hosebed and tower(s) cover plate work (as applicable). Hosebed adjustable divider extrusion rearward of the furthest tower is to run full width of the hosebed (as is practical with other hosebed mounted equipment). | 1 |
| 3340-0035 | Divider Long. To run full length of hose bed (front to rear). | 1 |
| 3340-0049 | Hosebed storage pan. Locate in forward area of hosebed. | 1 |
| 3340-0058 | Recessed fuel fill driver side wheel well. | 1 |
| 3340-0075 | Body mainframe and hosebed side assemblies for a 90" high body. | 1 |
| 3340-0093 | Mud flaps, rear, black with E-ONE logo. | 1 |
| 3340-0110 | The rear of each hose bed divider to have a hand hold cut-out(s). | 1 |
| 3340-0282-I06 | Cab tilt switch and manual jack to be located: R1 low on forward wall. | 1 |
| 3340-0302 | Long hose bed divider(s) to be held short to allow for adjustability of the divider(s) with hose bed preconnect(s) if applicable per hose loading and option locations. | 1 |

| | | |
|---|---|---|
| 3340-0486 | Diamond plate single axle wheel well. Includes bolt-on composite wheel well liners and bolt-on polished alum fenderettes. | 1 |
| 3340-0494 | Rubrail for the body. | 1 |
| 3340-0586 | Storage pan over eMAX transverse storage area(s). | 1 |
| 3340-0681 | Body mainframe layout line to be 24". Includes body and all applicable modules. | 1 |
| SCBA BOTTLE STORAGE | | |
| 3320-0100 | Strap(s), loop style to retain SCBA bottle(s). Locate one per bottle in each exterior storage compartment. | 1 |
| 3320-0187-495 | Cast Products brand (1) SCBA bottle storage with gasketed door and push button latch. Door shall NOT cover the recessed fuel fill if located adjacent to the SCBA storage. Location: driver side rear wheel well offset forward | 1 |
| 3320-0187-497 | Cast Products brand (1) SCBA bottle storage with gasketed door and push button latch. Door shall NOT cover the recessed fuel fill if located adjacent to the SCBA storage. Location: driver side rear wheel well offset rearward | 1 |
| 3320-0187-498 | Cast Products brand (1) SCBA bottle storage with gasketed door and push button latch. Door shall NOT cover the recessed fuel fill if located adjacent to the SCBA storage. Location: officer side rear wheel well offset forward | 1 |
| 3320-0187-500 | Cast Products brand (1) SCBA bottle storage with gasketed door and push button latch. Door shall NOT cover the recessed fuel fill if located adjacent to the SCBA storage. Location: officer side rear wheel well offset rearward | 1 |
| PUMPS | | |
| 4005-0031 | Rating 1500 GPM. | 1 |
| 4005-0204 | E-ONE 1250-1500 GPM pump, single stage. Requires primer option. | 1 |
| PUMP CERTIFICATION | | |
| 4475-0000 | Pump certification 750-2250 GPM | 1 |
| PUMP OPTIONS | | |
| 4015-0053-198 | Steamers to be Flush + 1". Location: driver's side. | 1 |
| 4015-0053-199 | Steamers to be Flush + 1". Location: officer's side. | 1 |
| 4015-0098 | Manual operated master pump drain. The master drain shall be clearly marked and placed in accessible location on pump panel. | 1 |
| 4015-0133 | Anode for Darley pump - (1) intake side. | 1 |
| 4015-0210 | Pump cooler with Innovative Control 1/4 turn valve with "T" handle and label. | 1 |
| 4015-0240 | Darley electric primer (oil-less). | 1 |
| INTAKES | | |
| 4440-0005 | 2.5" Left Intake Akron Manual Valve. | 1 |
| INTAKE OPTIONS | | |
| 4445-0048 | Intake pressure relief valve, Task Force Tips. | 1 |
| DISCHARGES AND PRECONNECTS | | |
| 4415-0014-581 | 2.5" Left Pump Panel Discharge Akron Manual Valve. Location: left side discharge 1. | 1 |
| 4415-0014-582 | 2.5" Left Pump Panel Discharge Akron Manual Valve. Location: left side discharge 2. | 1 |
| 4415-0018 | 2.5" left front hose bed discharge Akron manual valve. | 1 |
| 4415-0041 | 3" Deck Gun Discharge, Akron manual valve. | 1 |
| 4415-0054-583 | 4" Right Pump Panel Discharge with 3" Akron Manual Valve (Waterous pumps noted location to be forward lower port). Location: right side discharge 1. | 1 |
| 4415-0065 | 1.5" Double Speedlay with Akron Manual Valves. | 1 |
| 4417-0106-685 | Deck gun piping to be positioned driver side of hose bed storage pan. | 1 |
| DISCHARGE OPTIONS | | |
| 4417-0175 | Innovative Controls push/pull valve controls with locking T handles. | 1 |
| 4417-0176 | Innovative Controls 3/4" bleeder/drain valve include lift lever with ergonomic grip. | 7 |
| 4417-0185 | Innovative Controls discharge and intake bezels with integral color code and verbiage for side mount pump panel. | 1 |
| PRESSURE GOVERNORS | | |
| 4465-0011 | Class 1 TPG pressure governor. Includes, water, oil, volt and tachometer. | 1 |

| | | |
|---|---|---|
| **GAUGES** | | |
| 4435-0083 | Innovative Controls 10 LED SL series water tank level gauge. On pump panel. | 1 |
| 4435-0246 | 2.5" Innovative Controls stainless steel case pressure gauge (0-400) with color code bezel. | 7 |
| 4435-0247 | 4" Innovative Controls stainless steel case master pressure gauges with bezel. Intake 30-0-400, and discharge 0-400. | 1 |
| **ELECTRICAL SYSTEMS** | | |
| 5010-0013-Y83 | Vehicle data recorder - 2009 / 2016 NFPA compliant. Includes occupant detection with display. Display location: inboard on driver's side overhead console. | 1 |
| 5010-0036 | V-MUX Electrical system for pumper / tanker / rescue. | 1 |
| 5010-0059-339 | VFD Text display for V-MUX electrical system. Location: center of dash. | 1 |
| **LIGHT BARS** | | |
| 5300-0504 | Whelen MKEZ7 1.5" standard mount for front light bar (PR). | 1 |
| 5300-0506-000-4V | Light bar LED color: Red/White with clear lenses | 1 |
| 5300-0511 | Light bar Whelen Freedom IV Model F4X7 72" with 8 LED modules. Location: Centered on the front cab roof. | 1 |
| **WARNING LIGHT PACKAGES** | | |
| 5550-0059-535 | Whelen Super LED lower level warning light package. Includes (8) red 600 LED light heads and (2) red 500 LED light heads w/chrome flanges. Locate side facing lights: at forward most position, centered in rear wheel well, and side facing at rear of body in rubrail if equipped. | 1 |
| **WARNING LIGHTS** | | |
| 5600-0078-479-06 | Whelen Super LED beacon (PR) model L31H with Red domes. Location rear upper body on aerial style brackets. | 1 |
| 5600-0105-170 | Hazard (door ajar) light 2" LED. Location: center overhead. | 1 |
| **SIRENS** | | |
| 5500-0015 | Whelen model 295SLSA1 siren with microphone (replaced 295HFSA1). | 1 |
| 5500-0024-170 | The electronic siren control is to be located on the center overhead. | 1 |
| **SPEAKERS** | | |
| 5510-0029-209 | Speaker, Federal Signal Dynamax ES100 with "E-ONE" grille through bumper. Location: driver side front bumper. | 1 |
| **DOT LIGHTING** | | |
| 5150-0017 | License plate light LED with chrome housing located at the rear of the body. | 1 |
| 5150-0025 | Marker light LED body/cab package. E-One custom cab and pumper or tanker body only. | 1 |
| 5150-0032 | Bracket license plate at rear of body. | 1 |
| 5150-0056 | Whelen 600 series LED vertical mount tail lights. Includes LED stop/tail, arrow turn and back-up lights with vertical Cast 3 housing and weatherproof connectors. | 1 |
| **LIGHTS - COMPARTMENT, STEP & GROUND** | | |
| 5380-0144 | Compartment light package Amdor Luma-Bar LED for medium bodies. Includes two lights per compartment (four if transverse). | 1 |
| 5380-0182 | Ground light package EON LED - large. | 1 |
| **LIGHTS - DECK AND SCENE** | | |
| 5390-0007 | Deck/scene light circuit wiring through chassis reverse. Requires rear deck or scene light. | 1 |
| 5390-0076 | Hose bed light Truck-Lite LED model 81380. Locate at front of hose bed. Switched with work light switch in cab. | 1 |
| 5390-0152-396 | Whelen 600 series gradient Super LED surface mounted scene lights (PR) with weatherproof connectors. Switch in cab (driver and officer side lights switched separately). Locate (1) each side rear compartment face up high. | 1 |
| **LIGHTS - NON-WARNING** | | |
| 5400-0003 | Engine compartment light (EA). | 1 |

| | | |
|---|---|---|
| 5400-0010 | Incandescent pump compartment light (EA). | 1 |
| 5400-0054 | Spotlight Specialty 2150 hand held located on officer's side of cab dash w/12V receptacle. | 1 |
| 5400-0137 | Pump panel LED light package for side mount eMAX. Includes (6) TecNiq EON lights with S/S housings, located (3) each side above lower side intake/discharge panels. Includes S/S light shields. SM eMAX only. | 1 |
| CONTROLS / SWITCHES | | |
| 5100-0000-199 | Foot switch to control air horns located officer's side. | 1 |
| 5100-0007-198 | Foot switch to control electronic siren located driver's side. | 1 |
| MISC ELECTRICAL | | |
| 5110-0017 | Back-up alarm 97 dB. | 1 |
| LIGHTS - QUARTZ | | |
| 5450-0123-429 | Light Whelen Pioneer Plus LED model PFP2 12V with PBAPEDD pedestal mount. Includes switch in cab (side facing lights switched separately). Location(s): driver side forward compartment top. | 1 |
| 5450-0123-431 | Light Whelen Pioneer Plus LED model PFP2 12V with PBAPEDD pedestal mount. Includes switch in cab (side facing lights switched separately). Location(s): officer side forward compartment top. | 1 |
| ELBOWS | | |
| 7400-0004 | Elbow 30 degree chrome swivel w/2.5"FNST x 2.5"MNST. | 2 |
| ADAPTERS | | |
| 7200-0026 | Swivel Connector 4" FNST x 5" Storz 30 Deg Elbow with Tethered Cap. | 1 |
| HAND TOOLS | | |
| 7600-0005 | Pike Pole Fiberglass 6'. | 1 |
| 7600-0007 | Pike Pole Fiberglass 10'. | 1 |
| HOSE / NOZZLES | | |
| 7700-0004 | Hard suction hose 6" X 10' with Pyrolite couplings. | 2 |
| GROUND LADDERS | | |
| 7800-0007 | Alco-Lite PRL-14' roof ladder. | 1 |
| 7800-0016 | Alco-Lite PEL-24' 2-section extension ladder. | 1 |
| 7800-0032 | Alco-Lite FL-10, 10' folding ladder w/safety shoes. | 1 |
| MISC LOOSE EQUIPMENT | | |
| 7900-0010 | Chrome Barrel Strainer 6" NST. | 1 |
| 7900-0014 | DOT Required Drive Away Kit - Kit includes three (3) triangular warning reflectors with carrying case. This kit is for the end user and is to remain with the truck. | 1 |
| EXTERIOR PAINT | | |
| 8100-0071 | Undercoating E-ONE. | 1 |
| 8100-0116 | Rear body surface to have a sanded finish (not painted job color). Includes hinged doors that do not have discrete sales codes and removable panels. | 1 |
| 8100-0176-000-17 | Paint E-ONE chassis cab - Sikkens paint. Color: FLNA3225E-1 Red. | 1 |
| 8100-0182-000-17 | Paint Body - Small - For Pumpers, Rear Mounts, S/A Tankers/Wetsides and Rescues. Sikkens paint. Color: FLNA3225E-1 Red. | 1 |
| 8100-0186-000-39 | Paint exterior surface of outer steel wheels. Sikkens paint. Color: Job Color. | 1 |
| INTERIOR PAINT | | |
| 8150-0011 | The interior of the cab to be painted Zolatone gray. | 1 |
| STRIPING | | |
| 8300-0002-334-12 | NFPA Scotchlite Stripe - 4" wide and straight on front/sides of cab and sides/rear of body. Color: White. Location: bottom of stripe flush with top of bumper and straight back. | 1 |
| 8300-0042 | White rubrail scotchlite insert. | 1 |
| 8300-0084-000-72 | Chevron "A" style 6" printed sheet Scotchlite striping full width on rear of body. Includes rear facing extrusions, panels and doors. Colors to be Yellow/Red. | 1 |

| | | |
|---|---|---|
| 8300-0313 | Yellow line to indicate designated standing / walking areas above 48" high in compliance with 2016 NFPA 1901. Line to be 1" wide. Steps, ladders and areas with a railing or structure at least 12" high are excluded from requiring the line. | 1 |

| WARRANTY / STANDARD & EXTENDED | | |
|---|---|---|
| 9100-0000 | Standard 1 Year Warranty. | 1 |
| 9100-0003 | Lifetime Frame Warranty. | 1 |
| 9100-0004 | 10 Year/100,000 Mile Structural Warranty for Alum Cab / Body - Statement of Warranty. | 1 |
| 9100-0005 | 10 Year Stainless Steel Plumbing Warranty - Statement of Warranty. | 1 |
| 9100-0019 | 10 Year Limited Paint and Perforation Warranty - For Sikkens Paint. | 1 |
| 9100-0090 | 25 Year frame rail corrosion warranty. Includes liners (if equipped). | 1 |

| SUPPORT, DELIVERY, INSPECTIONS AND MANUALS | | |
|---|---|---|
| 9300-0009 | Manuals, Operator and Service CD-ROM. | 1 |
| 9300-0016 | Approval Drawings-Standard. | 1 |
| 9300-0316 | Fire Apparatus Safety Guide published by FAMA, latest edition. | 1 |

PRICE - 2017 E-ONE EMAX PUMPER - TYPHOON CHASSIS - $385,627

# STATE OF OHIO TERM SCHEDULE

## 4200 SURFACE RD
## COLUMBUS, OH 43228

*Quote No: 57489*

8/27/2016

Quote Rev:31 Drawing Rev:7

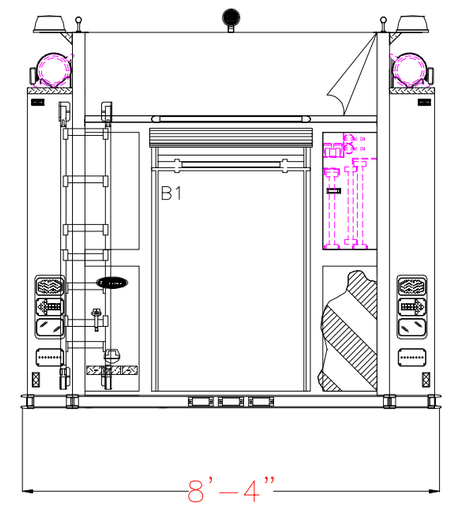


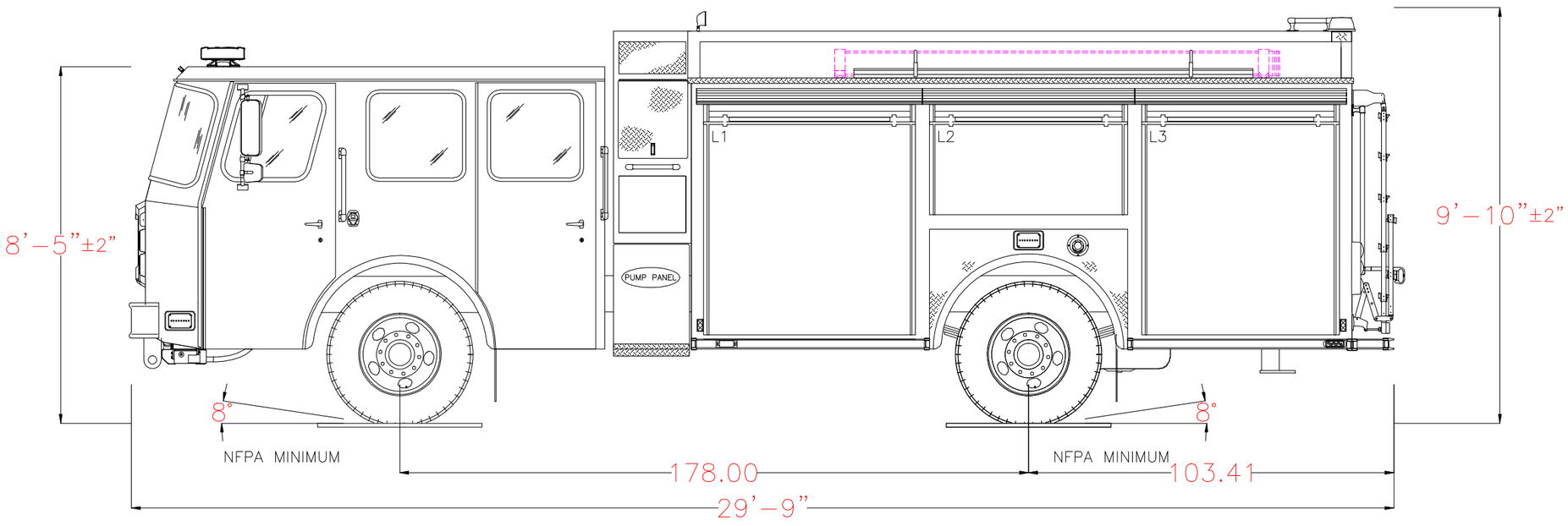


POWERED BY EZDRAW

Notice This drawing provides a GENERAL REPRESENTATION of the vehicle configuration and should be used for evaluation purposes. The respective dimensions shown,including overall height and length, are estimates and may vary due to manufacturing processes. All other items such as lighting and fixtures, plumbing, compartmentation, and other generally assembled details are shown for REFERENCE ONLY and may not be a direct reflection of the final truck configuration. In ALL situations where this drawing may conflict with the specifications, THE SPECIFICATIONS, AS REFLECTED IN THE APPROVED SHOP ORDER, SHALL PREVAIL. Unless otherwise specified, the proposed apparatus will be manufactured to the latest NFPA recommendations as well as other applicable federally regulated safety regulations. E-One reserves the right to engineer and incorporate design improvements and changes without notice, while adhering to the intent of the specification.

| 1500 GPM PUMP<br>0 TOTAL VOLUME<br>0 TOTAL FOAM | HOSE LOADS : |
|---|---|
| | |
| | |
| | |
| | |

| | OPENING | | INTERIOR DIMENSIONS | | | | |
|---|---|---|---|---|---|---|---|
| COMPT. | WIDTH | HEIGHT | WIDTH | LOWER HEIGHT | LOWER DEPTH | UPPER HEIGHT | UPPER DEPTH |
| L1 | 58 | 59.75 | 60 | 30 | 26 | 26.75 | 26 |
| L2 | 54 | 25.75 | 56 | N/A | N/A | 26.75 | 26 |
| L3 | 54 | 59.75 | 56 | 30 | 26 | 26.75 | 26 |
| R1 | 58 | 59.75 | 60 | 30 | 26 | 26.75 | 12 |
| R2 | 54 | 25.75 | 56 | N/A | N/A | 26.75 | 12 |
| R3 | 54 | 59.75 | 56 | 30 | 26 | 26.75 | 12 |
| B1 | 36 | 45 | 38 | 30 | 26 | N/A | N/A |

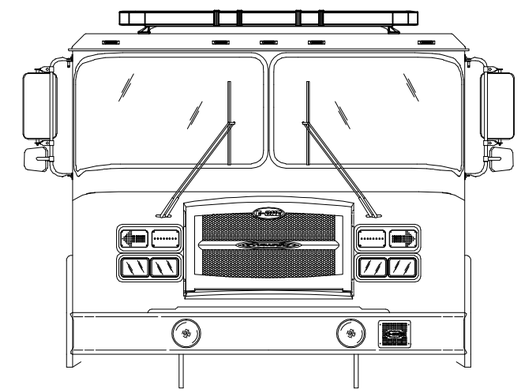

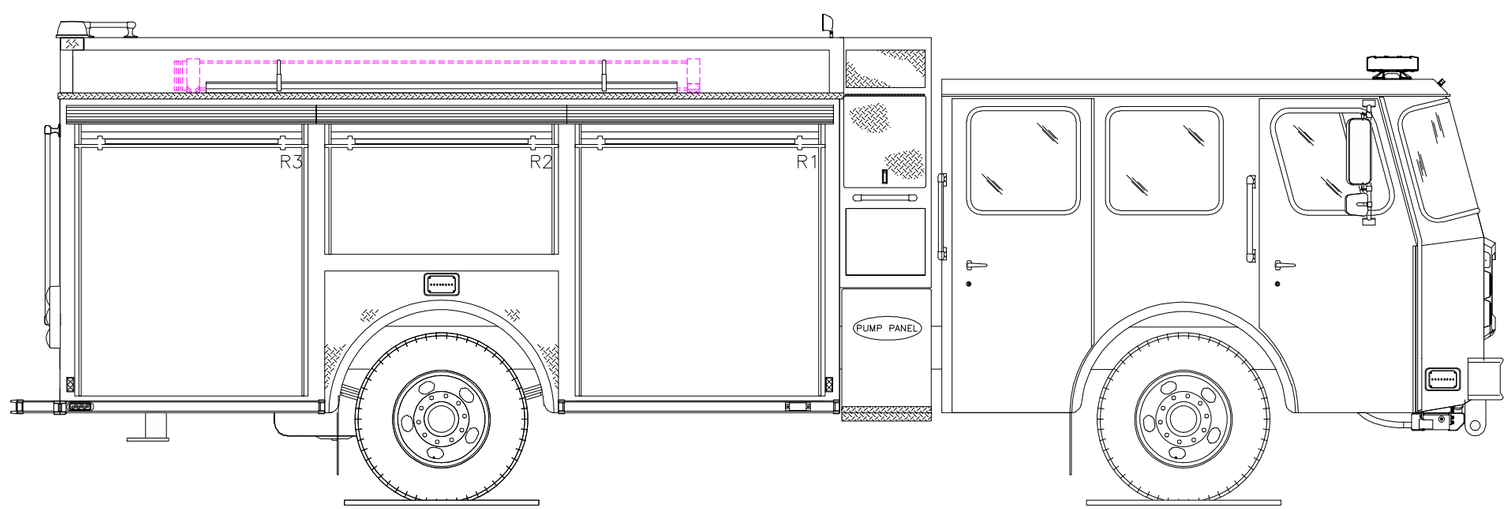


POWERED BY EZDRAW

Fire Apparatus Quotation for:
STATE OF OHIO TERM SCHEDULE

Quotation Number: 57486 Rev: 28

Unit Description: PMPR-CYC2
Quote Description: Pumper, Cyclone II

| Salescode | Extended Description | Qty |
|---|---|---|
| **TESTING COMPLIANCE STANDARD** | | |
| 1001-0065 | The E-ONE supplied components of the vehicle shall meet the requirements of NFPA 1901, 2016 edition. | 1 |
| 3090-0002 | OAH. Unit has no overall height restrictions. | 1 |
| 3090-0004 | OAL. Unit has no overall length restrictions. | 1 |
| 3090-0007 | Hosebed hoseload allowance on the apparatus shall be 1200 lbs. | 1 |
| 3340-1137-12B | Equipment allowance on the apparatus shall be 2000 lbs. This allowance is in addition to the weight of the hoses and ground ladders listed in the shop order as applicable. | 1 |
| **BUMPERS** | | |
| 1160-0000 | Bumper 10" stainless steel. | 1 |
| 1160-0011 | 4" Front Bumper Extension. | 1 |
| **FRAME ASSEMBLY** | | |
| 1250-0080 | Frame assembly with 10.25 x 3.5 x .375 powder coated galvanized rails. | 1 |
| **AXLE OPTIONS** | | |
| 1025-0011 | Meritor FL-943 front axle 20,000 lb. | 1 |
| 1025-0016 | Meritor RS-24-160 single rear axle 24,000 lb. capacity. | 1 |
| 1025-0028 | Koni shock absorbers for front axle - adjustable. | 1 |
| **SUSPENSIONS** | | |
| 1070-0001 | Rear suspension springs rated equal to the capacity of the axle. | 1 |
| **WHEEL OPTIONS** | | |
| 1050-0000 | Steel wheels for front axle (2). | 1 |
| 1050-0002 | Steel wheels for rear axle (4). | 1 |
| 1050-0007 | Front axle wheel trim kit. Includes stainless steel lug nut covers (chrome plated plastic if applicable) and center cap with E-ONE logo. Note: Center cap will have an inspection port IPO a logo if equipped with Stemco oil seals. | 1 |
| 1050-0008 | Rear axle (single) wheel trim kit. Includes stainless steel lug nut covers (chrome plated plastic if applicable) and center cap with E-ONE logo. E-ONE custom chassis w/steel wheels will have chrome plated plastic lug covers. | 1 |
| **TIRE OPTIONS** | | |
| 1060-0015 | Four Michelin 11R rear tires with XDN2 mud and snow tread. | 1 |
| 1060-0046 | Two Michelin 425 tires model XFE for front axle. | 1 |
| 1060-0117 | RWC AirGuard LED tire pressure monitoring valve stem caps (6) for single rear axle applications. | 1 |
| **BRAKE SYSTEMS** | | |
| 1100-0000 | 16-1/2" x 6" S-cam brakes with ArvinMeritor automatic slack adjusters for front axle. | 1 |
| 1100-0002 | ArvinMeritor 16-1/2" x 7" S-cam brakes with cast brake drums for a single rear axle. | 1 |
| 1100-0005 | Brake system air 4X2/4X4. | 1 |
| 1100-0006 | Parking brake release mounted on the driver's side lower dash. | 1 |
| **AIR SYSTEM OPTIONS** | | |
| 1110-0000-001 | Inlet for air system. Location: driver door jamb. | 1 |

| | | |
|---|---|---|
| 1110-0002 | Air dryer Bendix AD-9. | 1 |
| 1110-0006 | Air lines nylon. | 1 |
| 1110-0041 | Air horns Grover recessed in bumper (PR). | 1 |

| ENGINES & TRANSMISSIONS | | |
|---|---|---|
| 1200-0017 | Push-button transmission shift selector. | 1 |
| 1200-0021 | TransSynd synthetic transmission fluid for EVS 4000. | 1 |
| 1200-0097 | Electronic limiting of speed to 68 MPH maximum. Note: Max speed may be set at 65 MPH due to tire rating. | 1 |
| 1200-0316 | Eng/Trans Cummins ISX12 450HP with EVS4000 transmission. 2016 EPA Compliant. | 1 |

| SECONDARY BRAKING | | |
|---|---|---|
| 1125-0002 | Jacobs engine compression brake. | 1 |
| 1125-0023 | Transmission to seek second gear when Jacobs engine brake or Telma retarder is engaged. N/A with Trans retarder. | 1 |

| COOLING PACKAGE | | |
|---|---|---|
| 1800-0013 | Cooling system for use with Cyclone II X, Typhoon X, and Quest chassis. For use with 2010 / 2013 / 2016 EPA engines. Includes coolant recovery system. | 1 |

| FUEL SYSTEMS | | |
|---|---|---|
| 1350-0003 | Fuel system 50 gallon. | 1 |
| 1350-0012-670 | Fuel shut-off valve. Location: one (1) inlet side of OEM fuel filter. | 1 |
| 1350-0022 | Fuel line hose rubber. | 1 |

| ALTERNATOR | | |
|---|---|---|
| 1700-0005 | Alternator Leece Neville 320 amp. 320 amp SAE/275 amp NFPA. | 1 |

| BATTERIES | | |
|---|---|---|
| 1400-0002 | Battery four group 31 1000 CCA. | 1 |

| CHASSIS OPTIONS | | |
|---|---|---|
| 1680-0005 | Thermatic fan clutch. | 1 |
| 1680-0007 | Drivelines 1810. Required on 1550 lb/ft torque or greater engines. | 1 |
| 1680-0011 | Tow eyes rear below body, painted. | 1 |
| 1680-0042 | Tow hooks front painted in the down position. | 1 |
| 1680-0250-M58 | Diesel Exhaust Fluid (DEF) 5 gallon tank for 2013 / 2016 EPA engines. Location: left side below rear of cab. | 1 |
| 1680-0284 | Radiator mounted power steering cooler. | 1 |

| CAB MODEL | | |
|---|---|---|
| 1520-0008 | Cyclone II X medium cab with 58" CA | 1 |

| CAB ROOF TYPE | | |
|---|---|---|
| 1615-0010 | Cab roof to be "flat" (non-vista). | 1 |

| CAB BADGE PACKAGE | | |
|---|---|---|
| 1610-0000 | Cab and body to have applicable E-ONE logos. | 1 |

| CAB DOOR OPTIONS | | |
|---|---|---|
| 1550-0003 | Rear crew cab doors in the medium position. | 1 |
| 1550-0005 | Driver and officer cab door windows. Include forward vent windows. | 1 |
| 1550-0011 | Rear crew cab door windows. Includes manual roll-down actuation. Not available on Typhoon or CII with paddle style door latching. | 1 |
| 1550-0016 | Cab door panels ABS. | 1 |
| 1550-0025 | All cab doors shall have "L" style exterior latches. | 1 |
| 1550-0027 | Front cab door windows to have manual actuation. | 1 |
| 1550-0038-659 | (4) LED cab step area lighting. Locate each light on each cab door in the inboard position. Lights to be switched with door ajar. | 1 |
| 1550-0044 | All cab door kick plates to be made from diamond plate aluminum. | 1 |
| 1550-0059-000-G6 | Reflective Red/Lemon Yellow printed striping positioned in the "A" formation located on the cab door panels. | 1 |

| | | |
|---|---|---|
| 1550-0077 | Interior cab door locks - manual. Will have manual actuation from each respective door. Includes barrel style key lock on each exterior cab door. | 1 |
| 1550-0084 | All cab exterior access doors to have 1250 keyed locks. | 1 |

| MIRRORS | | |
|---|---|---|
| 1670-0003 | Velvac 2010 mirrors. Door mounted west coast style with remote control and heat. | 1 |

| MISC EXTERIOR CAB OPTIONS | | |
|---|---|---|
| 1550-0020 | Windows cab side fixed driver's side. | 1 |
| 1550-0033 | Windows cab side fixed officer's side. | 1 |
| 1675-0022 | Pair of 18" handrails located just behind driver and officer front door one each side. | 1 |
| 1675-0023 | Pair of 18" handrails located just behind driver and officer rear door (ALS doors if equipped) one each side. | 1 |
| 1675-0030 | Mud flaps, front, black with E-ONE logo. | 1 |
| 1675-0047 | Rear cab wall to be 3/16" aluminum diamond plate. | 1 |
| 1675-0201 | Large radius cab wheel well. Includes bolt-on adjustable wheel well trim. | 1 |
| 1675-0202 | Mounting plate for battery charger receptacle, indicator and air inlet (if applicable). Plate to be removable brushed stainless steel. | 1 |

| HVAC | | |
|---|---|---|
| 1515-0018 | Air conditioning for the Typhoon X, CII X and Quest with roof top mounted condenser. | 1 |
| 1515-0053 | Controls for heating and air conditioning shall be located in the center dash area. (Lower area on Typhoon and CII with severe duty dash) | 1 |

| SEATS | | |
|---|---|---|
| 1510-0003 | Seats, Inc. brand 911 cab seats. | 1 |
| 1510-0008 | Seat color gray. | 1 |
| 1510-0035-147 | Universal air pack bottle bracket (EA). Location: officer's seat. | 1 |
| 1510-0035-148 | Universal air pack bottle bracket (EA). Location: rear facing driver's side. | 1 |
| 1510-0035-215 | Universal air pack bottle bracket (EA). Location: rear facing officer's side. | 1 |
| 1510-0038 | Driver seat 911 air ride. | 1 |
| 1510-0042 | Officer seat to be 911 fixed SCBA. | 1 |
| 1510-0050 | Rear facing 911 seat with SCBA driver's side. | 1 |
| 1510-0053 | Rear facing 911 seat with SCBA officer's side. | 1 |
| 1510-0234 | Seat cover material Turnout Tuff. | 1 |
| 1685-0031 | Seating capacity tag of four occupants. | 1 |

| MISC INTERIOR CAB OPTIONS | | |
|---|---|---|
| 1685-0000 | Cab interior gray. Does not include engine cover or seat color. | 1 |
| 1685-0005 | Lexan sun visors, driver and officer's side overhead. | 1 |
| 1685-0168 | ABS Dash package. Includes center and officer side dash, lower kick panels and "A" post covers. | 1 |
| 1685-0187 | Severe duty engine cover, molded polyurethane. | 1 |

| CAB ELECTRICAL OPTIONS | | |
|---|---|---|
| 1750-0013-172 | Turn signal Whelen 600 LED amber arrow pair located upper headlight bezel. | 1 |
| 1750-0024-179-04 | Auto-Eject receptacle inlet 20 amp located outside driver's door next to handrail with a Yellow cover. | 1 |
| 1750-0029 | Switch horn button two position DOT/air horn. | 1 |
| 1750-0046-195 | Cab Headlights. Position: lower. | 1 |
| 1750-0072-593 | 12 VDC (or 24VDC) electrical outlet in the cab wired battery hot. Location: officer side dash. | 2 |
| 1750-0075 | English dominant main cab gauge cluster. | 1 |
| 1750-0158 | Dome Lts Red/White LED. Package includes two lights mounted in the front and two mounted in the rear of the cab. White light wired through door and light assembly switch. Red light through light assembly switch. | 1 |
| 1750-0198-A31 | Battery charger to be located behind driver's seat. | 1 |
| 1750-0343 | Battery charger E-ONE LPC 20. 120 volt inlet, 20 amp output. | 1 |
| 1750-0435 | Halogen cab headlights. TyphoonX, CIIX and QST2 only. | 1 |
| 1750-0449 | Momentary DPF regeneration override switch. | 1 |

| | | |
|---|---|---|
| **BODY COMPT LEFT SIDE** | | |
| 3100-0095 | Driver side body with full height 36" wide forward and 36" wide rearward compartmentation. Includes (1) 56" wide compartment over the wheel well. | 1 |
| **BODY COMPT RIGHT SIDE** | | |
| 3120-0004 | Officer half side body with 36" wide forward and 36" wide rearward compartmentation. Includes adjustable ladder tracks. | 1 |
| **BODY COMPT REAR** | | |
| 3110-0005 | Full Height Rear Compartment. Includes smooth plate panels. | 1 |
| 3110-0034 | Upper rear compartment depth to be shallow. | 1 |
| 3340-0115 | Bolt-on diamond plate 16" tailboard (full width of body). Includes (2) squared off beavertails (no stanchions) with removable outer panels and handrails- (2) vertical on trailing edge of body and horizontal mounted handrail(s) below hosebed. | 1 |
| **DOORS** | | |
| 3300-0017-004 | Door roll up short (up to 45") with satin finish ROM. Location(s): L2. | 1 |
| 3300-0017-015 | Door roll up short (up to 45") with satin finish ROM. Location(s): R1. | 1 |
| 3300-0017-016 | Door roll up short (up to 45") with satin finish ROM. Location(s): R2. | 1 |
| 3300-0019-003 | Door roll up tall (greater than 45") with satin finish ROM. Location(s): L1. | 1 |
| 3300-0019-005 | Door roll up tall (greater than 45") with satin finish ROM. Location(s): L3. | 1 |
| 3300-0019-027 | Door roll up tall (greater than 45") with satin finish ROM. Location(s): B1. | 1 |
| **SHELVES** | | |
| 3370-0025-099 | Shelf, permanent shelf. Locate in L1 at offset (above extrusion if applicable). | 1 |
| 3370-0025-100 | Shelf, permanent shelf. Locate in L3 at offset (above extrusion if applicable). | 1 |
| 3370-0052-I41 | Adjustable shelf (J-Style) for non-transverse compartments 16" or greater in depth. Location: B1 lower. | 1 |
| 3370-0054-I41 | Tracks for adjustable shelf and/or adjustable tray in compartments 16" or greater in depth. Location: B1 lower. | 1 |
| **COVERS** | | |
| 3305-0007-000-02 | Vinyl Red hose bed cover with attached rear flap(s). | 1 |
| 3305-0008-000-02 | Vinyl Red crosslay cover with attached side flaps. | 1 |
| **PUMP MODULE** | | |
| 3130-0167 | Pump module to be 76" wide (side to side). Includes upper, lower, crosswalk, speedlay and tranverse module(s) if applicable. | 1 |
| 3130-0523 | Side mount pump module. Extruded aluminum with runningboards. | 1 |
| 3130-0532 | Pump panel opening is 39" wide. Pumper / tanker only. | 1 |
| 3130-0540 | Pump module height is 80". Pumper / tanker only. | 1 |
| **PUMP PANELS** | | |
| 3134-0016 | Stainless steel driver and officer side pump panels. | 1 |
| 3134-0064 | The gauge panel(s) on the driver side of the Side Mount module to be hinged upward. Panel(s) to include (2) mechanical/pneumatic (as applicable to panel size) hold opens and latches. | 1 |
| 3134-0143 | Officer side pump panel to be vertical hinged on forward extrusion. Panel to be (3) pieces with upper (2) panels secured in the closed position with push button latches. Upper panel to be held open with gas shock. | 1 |
| **MISC PUMP PANEL OPTIONS** | | |
| 4460-0003 | Pump panel tags color coded per NFPA compliance. | 1 |
| **PUMP MODULE OPTIONS** | | |
| 3136-0058 | E-ONE logo mounted one each side on pump module/preconnect panels. Logos to be sized as applicable to available space on panels. | 1 |
| 3136-0138 | Pump module storage pan. | 1 |
| 3136-0141 | Crosslay double 4.25" wide single stack to hold up to 200' of 2.0" DJ (each). | 1 |
| **WATER TANK** | | |
| 4010-0099 | Fill tower(s) to be located offset to officer side of water tank. | 1 |
| 4010-0174 | 530 Gallon "T" Water Tank. UPF Poly III color fill towers. Note: Any foam cell(s) will reduce the overall | 1 |

| | | |
|---|---|---|
| | water capacity. | |
| **TANK PLUMBING** | | |
| 4450-0010 | 2" tank fill Akron manual valve. | 1 |
| 4450-0119 | 3" tank to pump Akron manual valve w/4" tank connection. | 1 |
| **LADDER STORAGE / RACKS** | | |
| 3365-0025-515 | Attic ladder mounting brackets (PR). Locate officer side compartment top. | 1 |
| 3365-0028 | Hard Suction Storage Rack. Driver side compartment top. Includes spring hold downs and scuff plates behind spring mounts (as applicable). | 1 |
| 3365-0031 | Hard Suction Storage Rack. Officer side in adjustable track above ladders (if applicable). Includes spring hold downs and scuff plates. | 1 |
| 3365-0034-515 | (2) aluminum pike pole storage tubes. Locate officer side compartment top. | 1 |
| 3365-0049 | Brand of ladders capable of being carried on unit to be Alco-Lite. | 1 |
| 3365-0086-B99 | Pike pole(s) capable of being stored are to be the following length: (2) 10' pike poles. | 1 |
| 3365-0087-C57 | The length of ladders capable of being stored shall be the following: 24' 2-section and 14' roof ladder. | 1 |
| 3365-0168 | Pike pole tube secondary retaining pin(s) with cable. Locate on end of pike pole tube(s). | 1 |
| **HANDRAILS / STEPS** | | |
| 3330-0277 | Innovative Controls dual lighted LED folding steps rear NFPA. Includes folding steps on driver side (staggered stepped as applicable with tailboard depth) for NFPA hosebed access and handrail mounted on driver side upper hosebed side (as applicable). | 1 |
| 3330-0279-060 | Innovative Controls dual lighted LED folding step. Location: officer side front compartment face. Each location requires a minimum of (1) handrail per NFPA. | 1 |
| 3330-0279-062 | Innovative Controls dual lighted LED folding step. Location: driver side front compartment face. Each location requires a minimum of (1) handrail per NFPA. | 4 |
| **MISC BODY OPTIONS** | | |
| 3340-0004 | Hosebed above the booster tank. Includes forward hosebed and tower(s) cover plate work (as applicable). Hosebed adjustable divider extrusion rearward of the furthest tower is to run full width of the hosebed (as is practical with other hosebed mounted equipment). | 1 |
| 3340-0015 | Diamond plate single axle wheel well. Includes bolt-on composite wheel well liners and aluminum trim fenderettes. | 1 |
| 3340-0035 | Divider Long. To run full length of hose bed (front to rear). | 1 |
| 3340-0058 | Recessed fuel fill driver side wheel well. | 1 |
| 3340-0074 | Body mainframe and hosebed side assemblies for a 85" high body. | 1 |
| 3340-0093 | Mud flaps, rear, black with E-ONE logo. | 1 |
| 3340-0110 | The rear of each hose bed divider to have a hand hold cut-out(s). | 1 |
| 3340-0128 | Bolt-in partition walls. Locate in lower rear compartment transverse area. Partitions to separate the side rear compartments from the rear compartment. | 1 |
| 3340-0145 | Rub rail for the body and pump area module(s). | 1 |
| 3340-0681 | Body mainframe layout line to be 24". Includes body and all applicable modules. | 1 |
| **SCBA BOTTLE STORAGE** | | |
| 3320-0100 | Strap(s), loop style to retain SCBA bottle(s). Locate one per bottle in each exterior storage compartment. | 1 |
| 3320-0187-495 | Cast Products brand (1) SCBA bottle storage with gasketed door and push button latch. Door shall NOT cover the recessed fuel fill if located adjacent to the SCBA storage. Location: driver side rear wheel well offset forward | 1 |
| 3320-0187-497 | Cast Products brand (1) SCBA bottle storage with gasketed door and push button latch. Door shall NOT cover the recessed fuel fill if located adjacent to the SCBA storage. Location: driver side rear wheel well offset rearward | 1 |
| 3320-0187-498 | Cast Products brand (1) SCBA bottle storage with gasketed door and push button latch. Door shall NOT cover the recessed fuel fill if located adjacent to the SCBA storage. Location: officer side rear wheel well offset forward | 1 |
| 3320-0187-500 | Cast Products brand (1) SCBA bottle storage with gasketed door and push button latch. Door shall NOT cover the recessed fuel fill if located adjacent to the SCBA storage. Location: officer side rear wheel well offset rearward | 1 |

| | | |
|---|---|---|
| **PUMPS** | | |
| 4005-0031 | Rating 1500 GPM. | 1 |
| 4005-0196 | Hale QMAX 1000-2250 GPM single stage pump. Requires primer option. | 1 |
| **PUMP CERTIFICATION** | | |
| 4475-0000 | Pump certification 750-2250 GPM | 1 |
| **PUMP OPTIONS** | | |
| 4015-0008 | Zinc anodes for Hale pump (PR), (1) discharge side and (1) intake side. | 1 |
| 4015-0022 | Mechanical pump seal - Hale. | 1 |
| 4015-0052-198 | Steamers to be Flush. Location: driver's side. | 1 |
| 4015-0052-199 | Steamers to be Flush. Location: officer's side. | 1 |
| 4015-0098 | Manual operated master pump drain. The master drain shall be clearly marked and placed in accessible location on pump panel. | 1 |
| 4015-0210 | Pump cooler with Innovative Control 1/4 turn valve with "T" handle and label. | 1 |
| 4015-0238 | Hale electric primer (oil-less). | 1 |
| **INTAKES** | | |
| 4440-0005 | 2.5" Left Intake Akron Manual Valve. | 1 |
| **INTAKE OPTIONS** | | |
| 4445-0016 | Intake relief valve, Hale 2.5". | 1 |
| **DISCHARGES AND PRECONNECTS** | | |
| 4415-0012-654 | 1.5" Crosslay with Akron manual valve. Location: crosslay 1 & 2. | 2 |
| 4415-0014-581 | 2.5" Left Pump Panel Discharge Akron Manual Valve. Location: left side discharge 1. | 1 |
| 4415-0014-582 | 2.5" Left Pump Panel Discharge Akron Manual Valve. Location: left side discharge 2. | 1 |
| 4415-0016-584 | 2.5" Right Pump Panel Discharge Akron Manual Valve. Location: right side discharge 2. | 1 |
| 4415-0022-350 | 2.5" Left Rear Discharge Akron Manual Valve. Location: left rear discharge. | 1 |
| 4415-0041 | 3" Deck Gun Discharge, Akron manual valve. | 1 |
| 4415-0054-583 | 4" Right Pump Panel Discharge with 3" Akron Manual Valve (Waterous pumps noted location to be forward lower port). Location: right side discharge 1. | 1 |
| 4417-0106-L65 | Deck gun piping to be positioned centered in deck gun channel. | 1 |
| **DISCHARGE OPTIONS** | | |
| 4417-0175 | Innovative Controls push/pull valve controls with locking T handles. | 1 |
| 4417-0176 | Innovative Controls 3/4" bleeder/drain valve include lift lever with ergonomic grip. | 8 |
| 4417-0185 | Innovative Controls discharge and intake bezels with integral color code and verbiage for side mount pump panel. | 1 |
| **PRESSURE GOVERNORS** | | |
| 4465-0011 | Class 1 TPG pressure governor. Includes, water, oil, volt and tachometer. | 1 |
| **GAUGES** | | |
| 4435-0083 | Innovative Controls 10 LED SL series water tank level gauge. On pump panel. | 1 |
| 4435-0246 | 2.5" Innovative Controls stainless steel case pressure gauge (0-400) with color code bezel. | 8 |
| 4435-0247 | 4" Innovative Controls stainless steel case master pressure gauges with bezel. Intake 30-0-400, and discharge 0-400. | 1 |
| **ELECTRICAL SYSTEMS** | | |
| 5010-0013-Y83 | Vehicle data recorder - 2009 / 2016 NFPA compliant. Includes occupant detection with display. Display location: inboard on driver's side overhead console. | 1 |
| 5010-0036 | V-MUX Electrical system for pumper / tanker / rescue. | 1 |
| 5010-0059-339 | VFD Text display for V-MUX electrical system. Location: center of dash. | 1 |
| **LIGHT BARS** | | |
| 5300-0504 | Whelen MKEZ7 1.5" standard mount for front light bar (PR). | 1 |
| 5300-0506-000-4V | Light bar LED color: Red/White with clear lenses | 1 |
| 5300-0511 | Light bar Whelen Freedom IV Model F4X7 72" with 8 LED modules. Location: Centered on the front | 1 |

| | | |
|---|---|---|
| | cab roof. | |
| **WARNING LIGHT PACKAGES** | | |
| 5550-0059-535 | Whelen Super LED lower level warning light package. Includes (8) red 600 LED light heads and (2) red 500 LED light heads w/chrome flanges. Locate side facing lights: at forward most position, centered in rear wheel well, and side facing at rear of body in rubrail if equipped. | 1 |
| **WARNING LIGHTS** | | |
| 5600-0078-479-06 | Whelen Super LED beacon (PR) model L31H with Red domes. Location rear upper body on aerial style brackets. | 1 |
| 5600-0105-170 | Hazard (door ajar) light 2" LED. Location: center overhead. | 1 |
| **SIRENS** | | |
| 5500-0015 | Whelen model 295SLSA1 siren with microphone (replaced 295HFSA1). | 1 |
| 5500-0024-170 | The electronic siren control is to be located on the center overhead. | 1 |
| **SPEAKERS** | | |
| 5510-0029-209 | Speaker, Federal Signal Dynamax ES100 with "E-ONE" grille through bumper. Location: driver side front bumper. | 1 |
| **DOT LIGHTING** | | |
| 5150-0007 | Whelen 600 series LED vertical mount tail lights. Includes LED stop/tail, arrow turn and halogen back-up lights with vertical Cast 3 housing and weatherproof connectors. | 1 |
| 5150-0017 | License plate light LED with chrome housing located at the rear of the body. | 1 |
| 5150-0025 | Marker light LED body/cab package. E-One custom cab and pumper or tanker body only. | 1 |
| 5150-0032 | Bracket license plate at rear of body. | 1 |
| **LIGHTS - COMPARTMENT, STEP & GROUND** | | |
| 5380-0189 | Compartment light package Amdor Luma-Bar LED for small bodies. Includes one light per compartment (two if transverse). | 1 |
| 5380-0200 | Ground light package EON LED - small. | 1 |
| **LIGHTS - DECK AND SCENE** | | |
| 5390-0058-395 | Deck Lights - Truck-Lite LED model 81380 (PR). Location: rear body/beavertail area on the trailing edge up high. | 1 |
| 5390-0076 | Hose bed light Truck-Lite LED model 81380. Locate at front of hose bed. Switched with work light switch in cab. | 1 |
| 5390-0102 | Crosslay light Truck-Lite LED model 81380. Locate to rear of crosslay (SM) and forward of crosslay (TM as applicable). Switched with work light switch in cab. | 1 |
| **LIGHTS - NON-WARNING** | | |
| 5400-0003 | Engine compartment light (EA). | 1 |
| 5400-0010 | Incandescent pump compartment light (EA). | 1 |
| 5400-0054 | Spotlight Specialty 2150 hand held located on officer's side of cab dash w/12V receptacle. | 1 |
| 5400-0092 | Weldon pump panel LED light package with (3) lights per side pump panel. Pump panels over 45" may require additional lights. Side mount only. | 1 |
| **CONTROLS / SWITCHES** | | |
| 5100-0000-199 | Foot switch to control air horns located officer's side. | 1 |
| 5100-0007-198 | Foot switch to control electronic siren located driver's side. | 1 |
| **MISC ELECTRICAL** | | |
| 1750-0082-762 | 12V power distribution module. Includes (6) battery hot and (6) switched hot circuits. 100 amps max (IATS). Location: behind officer's seat. | 1 |
| 5110-0017 | Back-up alarm 97 dB. | 1 |
| **LIGHTS - QUARTZ** | | |
| 5450-0290-407 | Light Whelen Pioneer model PFP1 12V with internal top raise pole mount. Includes switch accessible to driver. Location: driver side of pump module forward area. | 1 |

| | | |
|---|---|---|
| 5450-0290-408 | Light Whelen Pioneer model PFP1 12V with internal top raise pole mount. Includes switch accessible to driver. Location: officer side of pump module forward area. | 1 |
| **ELBOWS** | | |
| 7400-0004 | Elbow 30 degree chrome swivel w/2.5"FNST x 2.5"MNST. | 4 |
| **ADAPTERS** | | |
| 7200-0026 | Swivel Connector 4" FNST x 5" Storz 30 Deg Elbow with Tethered Cap. | 1 |
| **HAND TOOLS** | | |
| 7600-0005 | Pike Pole Fiberglass 6'. | 1 |
| 7600-0007 | Pike Pole Fiberglass 10'. | 1 |
| **HOSE / NOZZLES** | | |
| 7700-0004 | Hard suction hose 6" X 10' with Pyrolite couplings. | 2 |
| **GROUND LADDERS** | | |
| 7800-0007 | Alco-Lite PRL-14' roof ladder. | 1 |
| 7800-0016 | Alco-Lite PEL-24' 2-section extension ladder. | 1 |
| 7800-0032 | Alco-Lite FL-10, 10' folding ladder w/safety shoes. | 1 |
| **MISC LOOSE EQUIPMENT** | | |
| 7900-0010 | Chrome Barrel Strainer 6" NST. | 1 |
| 7900-0014 | DOT Required Drive Away Kit - Kit includes three (3) triangular warning reflectors with carrying case. This kit is for the end user and is to remain with the truck. | 1 |
| **EXTERIOR PAINT** | | |
| 8100-0071 | Undercoating E-ONE. | 1 |
| 8100-0089 | All applicable pump/pre-connect application modules are to have a sanded finish (not painted job color). Includes upper and lower pump modules, crosswalk module and/or speedlay/pre-connect module (as applicable). Rear mounted body/pump module to be painted job color. | 1 |
| 8100-0116 | Rear body surface to have a sanded finish (not painted job color). Includes hinged doors that do not have discrete sales codes and removable panels. | 1 |
| 8100-0176-000-17 | Paint E-ONE chassis cab - Sikkens paint. Color: FLNA3225E-1 Red. | 1 |
| 8100-0182-000-17 | Paint Body - Small - For Pumpers, Rear Mounts, S/A Tankers/Wetsides and Rescues. Sikkens paint. Color: FLNA3225E-1 Red. | 1 |
| 8100-0186-000-39 | Paint exterior surface of outer steel wheels. Sikkens paint. Color: Job Color. | 1 |
| **INTERIOR PAINT** | | |
| 8150-0011 | The interior of the cab to be painted Zolatone gray. | 1 |
| **STRIPING** | | |
| 8300-0002-334-12 | NFPA Scotchlite Stripe - 4" wide and straight on front/sides of cab and sides/rear of body. Color: White. Location: bottom of stripe flush with top of bumper and straight back. | 1 |
| 8300-0042 | White rubrail scotchlite insert. | 1 |
| 8300-0084-000-72 | Chevron "A" style 6" printed sheet Scotchlite striping full width on rear of body. Includes rear facing extrusions, panels and doors. Colors to be Yellow/Red. | 1 |
| 8300-0313 | Yellow line to indicate designated standing / walking areas above 48" high in compliance with 2016 NFPA 1901. Line to be 1" wide. Steps, ladders and areas with a railing or structure at least 12" high are excluded from requiring the line. | 1 |
| **WARRANTY / STANDARD & EXTENDED** | | |
| 9100-0000 | Standard 1 Year Warranty. | 1 |
| 9100-0003 | Lifetime Frame Warranty. | 1 |
| 9100-0004 | 10 Year/100,000 Mile Structural Warranty for Alum Cab / Body - Statement of Warranty. | 1 |
| 9100-0005 | 10 Year Stainless Steel Plumbing Warranty - Statement of Warranty. | 1 |
| 9100-0019 | 10 Year Limited Paint and Perforation Warranty - For Sikkens Paint. | 1 |
| 9100-0090 | 25 Year frame rail corrosion warranty. Includes liners (if equipped). | 1 |

| SUPPORT, DELIVERY, INSPECTIONS AND MANUALS | | |
|---|---|---|
| 9300-0009 | Manuals, Operator and Service CD-ROM. | 1 |
| 9300-0016 | Approval Drawings-Standard. | 1 |
| 9300-0316 | Fire Apparatus Safety Guide published by FAMA, latest edition. | 1 |

PRICE - 2017 E-ONE PUMPER - CYCLONE CHASSIS - $429,343

# STATE OF OHIO TERM SCHEDULE

## 4200 SURFACE RD
## COLUMBUS, OH 43228

*Quote No: 57486*

8/27/2016

Quote Rev:28 Drawing Rev:8

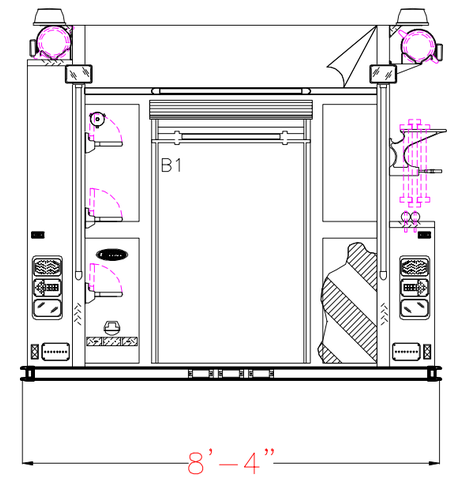


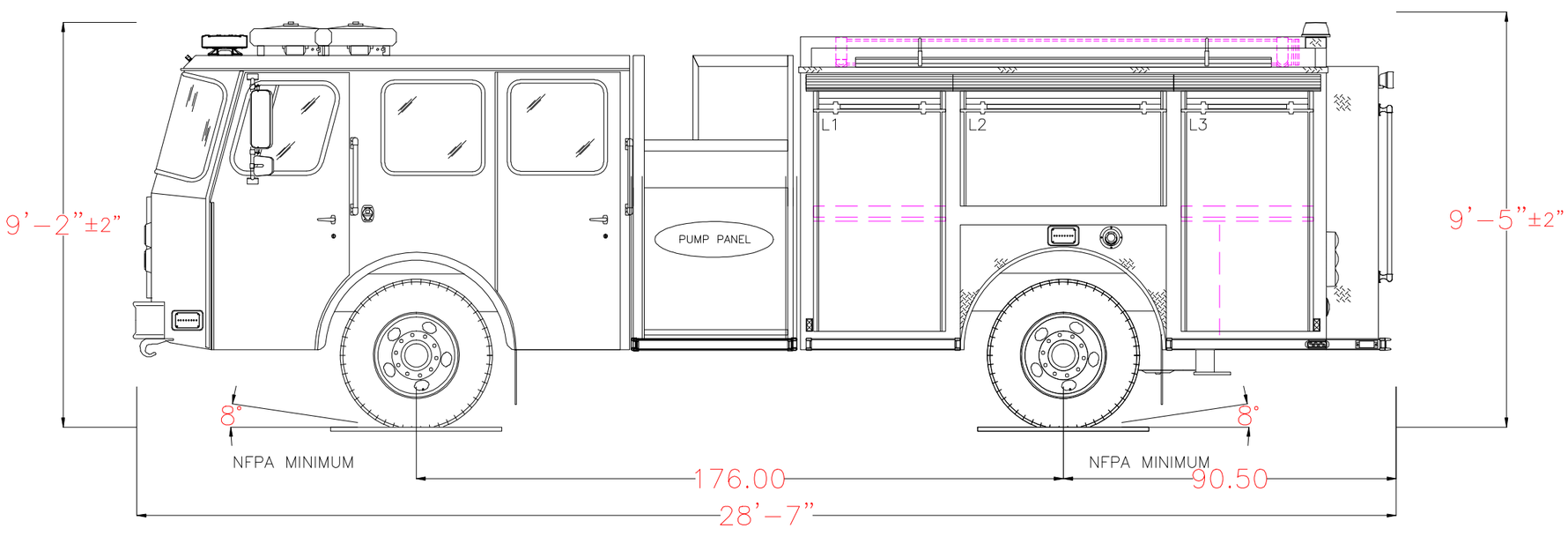


POWERED BY EZDRAW

Notice This drawing provides a GENERAL REPRESENTATION of the vehicle configuration and should be used for evaluation purposes. The respective dimensions shown,including overall height and length, are estimates and may vary due to manufacturing processes. All other items such as lighting and fixtures, plumbing, compartmentation, and other generally assembled details are shown for REFERENCE ONLY and may not be a direct reflection of the final truck configuration. In ALL situations where this drawing may conflict with the specifications, THE SPECIFICATIONS, AS REFLECTED IN THE APPROVED SHOP ORDER, SHALL PREVAIL. Unless otherwise specified, the proposed apparatus will be manufactured to the latest NFPA recommendations as well as other applicable federally regulated safety regulations. E-One reserves the right to engineer and incorporate design improvements and changes without notice, while adhering to the intent of the specification.

| 1500 GPM PUMP<br>0 TOTAL VOLUME<br>0 TOTAL FOAM | HOSE LOADS : |
|---|---|
| | |
| | |
| | |
| | |

| | OPENING | | INTERIOR DIMENSIONS | | | | |
|---|---|---|---|---|---|---|---|
| COMPT. | WIDTH | HEIGHT | WIDTH | LOWER HEIGHT | LOWER DEPTH | UPPER HEIGHT | UPPER DEPTH |
| L1 | 34 | 59.75 | 36 | 30 | 26 | 26.75 | 12 |
| L2 | 54 | 25.75 | 56 | N/A | N/A | 26.75 | 12 |
| L3 | 34 | 59.75 | 36 | 30 | 26 | 26.75 | 12 |
| R1 | 34 | 21 | 36 | 30 | 26 | N/A | N/A |
| R2 | 34 | 21 | 36 | 30 | 26 | N/A | N/A |
| B1 | 36 | 45 | 38 | 30 | 26 | 24 | 14 |

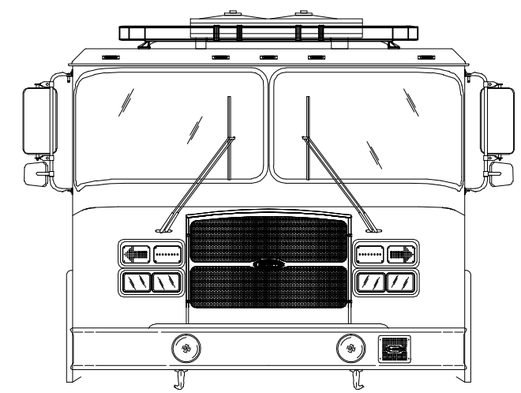

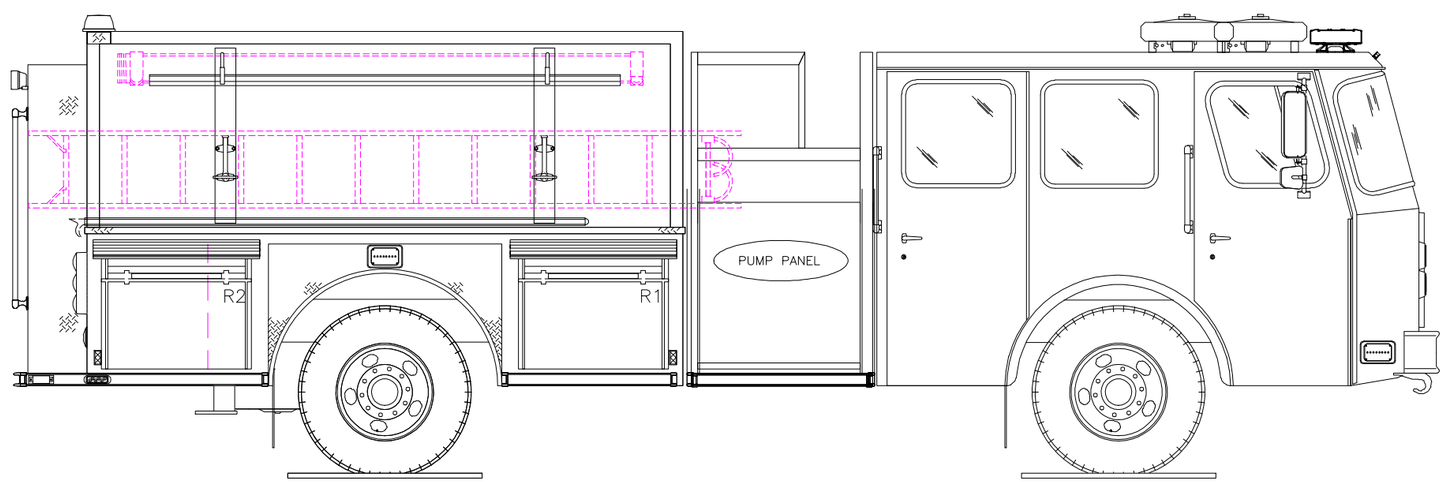


POWERED BY EZDRAW

Fire Apparatus Quotation for:
STATE OF OHIO TERM SCHEDULE

Quotation Number: 57488 Rev: 27

Unit Description: PMPR-CYC2
Quote Description: Pumper, Cyclone II

| Salescode | Extended Description | Qty |
|---|---|---|
| **TESTING COMPLIANCE STANDARD** | | |
| 1001-0065 | The E-ONE supplied components of the vehicle shall meet the requirements of NFPA 1901, 2016 edition. | 1 |
| 3090-0002 | OAH. Unit has no overall height restrictions. | 1 |
| 3090-0004 | OAL. Unit has no overall length restrictions. | 1 |
| 3090-0007 | Hosebed hoseload allowance on the apparatus shall be 1200 lbs. | 1 |
| 3340-1137-12C | Equipment allowance on the apparatus shall be 2500 lbs. This allowance is in addition to the weight of the hoses and ground ladders listed in the shop order as applicable. | 1 |
| **BUMPERS** | | |
| 1160-0000 | Bumper 10" stainless steel. | 1 |
| 1160-0011 | 4" Front Bumper Extension. | 1 |
| **FRAME ASSEMBLY** | | |
| 1250-0011 | Rear underbody support frame. | 1 |
| 1250-0080 | Frame assembly with 10.25 x 3.5 x .375 powder coated galvanized rails. | 1 |
| **AXLE OPTIONS** | | |
| 1025-0011 | Meritor FL-943 front axle 20,000 lb. | 1 |
| 1025-0017 | Meritor RS-25-160 single rear axle 27,000 lb. capacity. | 1 |
| 1025-0028 | Koni shock absorbers for front axle - adjustable. | 1 |
| **SUSPENSIONS** | | |
| 1070-0001 | Rear suspension springs rated equal to the capacity of the axle. | 1 |
| **WHEEL OPTIONS** | | |
| 1050-0000 | Steel wheels for front axle (2). | 1 |
| 1050-0002 | Steel wheels for rear axle (4). | 1 |
| 1050-0007 | Front axle wheel trim kit. Includes stainless steel lug nut covers (chrome plated plastic if applicable) and center cap with E-ONE logo. Note: Center cap will have an inspection port IPO a logo if equipped with Stemco oil seals. | 1 |
| 1050-0008 | Rear axle (single) wheel trim kit. Includes stainless steel lug nut covers (chrome plated plastic if applicable) and center cap with E-ONE logo. E-ONE custom chassis w/steel wheels will have chrome plated plastic lug covers. | 1 |
| **TIRE OPTIONS** | | |
| 1060-0016 | Four Michelin 12R rear tires with XDN2 mud and snow tread. | 1 |
| 1060-0046 | Two Michelin 425 tires model XFE for front axle. | 1 |
| 1060-0117 | RWC AirGuard LED tire pressure monitoring valve stem caps (6) for single rear axle applications. | 1 |
| **BRAKE SYSTEMS** | | |
| 1100-0000 | 16-1/2" x 6" S-cam brakes with ArvinMeritor automatic slack adjusters for front axle. | 1 |
| 1100-0002 | ArvinMeritor 16-1/2" x 7" S-cam brakes with cast brake drums for a single rear axle. | 1 |
| 1100-0005 | Brake system air 4X2/4X4. | 1 |
| 1100-0006 | Parking brake release mounted on the driver's side lower dash. | 1 |
| **AIR SYSTEM OPTIONS** | | |

| | | |
|---|---|---|
| 1110-0000-001 | Inlet for air system. Location: driver door jamb. | 1 |
| 1110-0002 | Air dryer Bendix AD-9. | 1 |
| 1110-0006 | Air lines nylon. | 1 |
| 1110-0041 | Air horns Grover recessed in bumper (PR). | 1 |
| ENGINES & TRANSMISSIONS | | |
| 1200-0017 | Push-button transmission shift selector. | 1 |
| 1200-0021 | TransSynd synthetic transmission fluid for EVS 4000. | 1 |
| 1200-0097 | Electronic limiting of speed to 68 MPH maximum. Note: Max speed may be set at 65 MPH due to tire rating. | 1 |
| 1200-0316 | Eng/Trans Cummins ISX12 450HP with EVS4000 transmission. 2016 EPA Compliant. | 1 |
| SECONDARY BRAKING | | |
| 1125-0002 | Jacobs engine compression brake. | 1 |
| 1125-0023 | Transmission to seek second gear when Jacobs engine brake or Telma retarder is engaged. N/A with Trans retarder. | 1 |
| COOLING PACKAGE | | |
| 1800-0013 | Cooling system for use with Cyclone II X, Typhoon X, and Quest chassis. For use with 2010 / 2013 / 2016 EPA engines. Includes coolant recovery system. | 1 |
| FUEL SYSTEMS | | |
| 1350-0003 | Fuel system 50 gallon. | 1 |
| 1350-0012-670 | Fuel shut-off valve. Location: one (1) inlet side of OEM fuel filter. | 1 |
| 1350-0022 | Fuel line hose rubber. | 1 |
| ALTERNATOR | | |
| 1700-0005 | Alternator Leece Neville 320 amp. 320 amp SAE/275 amp NFPA. | 1 |
| BATTERIES | | |
| 1400-0002 | Battery four group 31 1000 CCA. | 1 |
| CHASSIS OPTIONS | | |
| 1680-0005 | Thermatic fan clutch. | 1 |
| 1680-0007 | Drivelines 1810. Required on 1550 lb/ft torque or greater engines. | 1 |
| 1680-0011 | Tow eyes rear below body, painted. | 1 |
| 1680-0042 | Tow hooks front painted in the down position. | 1 |
| 1680-0250-M58 | Diesel Exhaust Fluid (DEF) 5 gallon tank for 2013 / 2016 EPA engines. Location: left side below rear of cab. | 1 |
| 1680-0284 | Radiator mounted power steering cooler. | 1 |
| CAB MODEL | | |
| 1520-0008 | Cyclone II X medium cab with 58" CA | 1 |
| CAB ROOF TYPE | | |
| 1615-0010 | Cab roof to be "flat" (non-vista). | 1 |
| CAB BADGE PACKAGE | | |
| 1610-0000 | Cab and body to have applicable E-ONE logos. | 1 |
| CAB DOOR OPTIONS | | |
| 1550-0003 | Rear crew cab doors in the medium position. | 1 |
| 1550-0005 | Driver and officer cab door windows. Include forward vent windows. | 1 |
| 1550-0011 | Rear crew cab door windows. Includes manual roll-down actuation. Not available on Typhoon or CII with paddle style door latching. | 1 |
| 1550-0016 | Cab door panels ABS. | 1 |
| 1550-0025 | All cab doors shall have "L" style exterior latches. | 1 |
| 1550-0027 | Front cab door windows to have manual actuation. | 1 |
| 1550-0038-659 | (4) LED cab step area lighting. Locate each light on each cab door in the inboard position. Lights to be switched with door ajar. | 1 |
| 1550-0044 | All cab door kick plates to be made from diamond plate aluminum. | 1 |
| 1550-0059-000-G6 | Reflective Red/Lemon Yellow printed striping positioned in the "A" formation located on the cab door panels. | 1 |
| 1550-0077 | Interior cab door locks - manual. Will have manual actuation from each respective door. Includes | 1 |

| | | |
|---|---|---|
| | barrel style key lock on each exterior cab door. | |
| 1550-0084 | All cab exterior access doors to have 1250 keyed locks. | 1 |

| MIRRORS | | |
|---|---|---|
| 1670-0003 | Velvac 2010 mirrors. Door mounted west coast style with remote control and heat. | 1 |

| MISC EXTERIOR CAB OPTIONS | | |
|---|---|---|
| 1550-0020 | Windows cab side fixed driver's side. | 1 |
| 1550-0033 | Windows cab side fixed officer's side. | 1 |
| 1675-0022 | Pair of 18" handrails located just behind driver and officer front door one each side. | 1 |
| 1675-0023 | Pair of 18" handrails located just behind driver and officer rear door (ALS doors if equipped) one each side. | 1 |
| 1675-0030 | Mud flaps, front, black with E-ONE logo. | 1 |
| 1675-0047 | Rear cab wall to be 3/16" aluminum diamond plate. | 1 |
| 1675-0201 | Large radius cab wheel well. Includes bolt-on adjustable wheel well trim. | 1 |
| 1675-0202 | Mounting plate for battery charger receptacle, indicator and air inlet (if applicable). Plate to be removable brushed stainless steel. | 1 |

| HVAC | | |
|---|---|---|
| 1515-0018 | Air conditioning for the Typhoon X, CII X and Quest with roof top mounted condenser. | 1 |
| 1515-0053 | Controls for heating and air conditioning shall be located in the center dash area. (Lower area on Typhoon and CII with severe duty dash) | 1 |

| SEATS | | |
|---|---|---|
| 1510-0003 | Seats, Inc. brand 911 cab seats. | 1 |
| 1510-0008 | Seat color gray. | 1 |
| 1510-0035-147 | Universal air pack bottle bracket (EA). Location: officer's seat. | 1 |
| 1510-0035-148 | Universal air pack bottle bracket (EA). Location: rear facing driver's side. | 1 |
| 1510-0035-215 | Universal air pack bottle bracket (EA). Location: rear facing officer's side. | 1 |
| 1510-0038 | Driver seat 911 air ride. | 1 |
| 1510-0042 | Officer seat to be 911 fixed SCBA. | 1 |
| 1510-0050 | Rear facing 911 seat with SCBA driver's side. | 1 |
| 1510-0053 | Rear facing 911 seat with SCBA officer's side. | 1 |
| 1510-0234 | Seat cover material Turnout Tuff. | 1 |
| 1685-0031 | Seating capacity tag of four occupants. | 1 |

| MISC INTERIOR CAB OPTIONS | | |
|---|---|---|
| 1685-0000 | Cab interior gray. Does not include engine cover or seat color. | 1 |
| 1685-0005 | Lexan sun visors, driver and officer's side overhead. | 1 |
| 1685-0168 | ABS Dash package. Includes center and officer side dash, lower kick panels and "A" post covers. | 1 |
| 1685-0187 | Severe duty engine cover, molded polyurethane. | 1 |

| CAB ELECTRICAL OPTIONS | | |
|---|---|---|
| 1750-0013-172 | Turn signal Whelen 600 LED amber arrow pair located upper headlight bezel. | 1 |
| 1750-0024-179-04 | Auto-Eject receptacle inlet 20 amp located outside driver's door next to handrail with a Yellow cover. | 1 |
| 1750-0029 | Switch horn button two position DOT/air horn. | 1 |
| 1750-0046-195 | Cab Headlights. Position: lower. | 1 |
| 1750-0072-593 | 12 VDC (or 24VDC) electrical outlet in the cab wired battery hot. Location: officer side dash. | 2 |
| 1750-0075 | English dominant main cab gauge cluster. | 1 |
| 1750-0158 | Dome Lts Red/White LED. Package includes two lights mounted in the front and two mounted in the rear of the cab. White light wired through door and light assembly switch. Red light through light assembly switch. | 1 |
| 1750-0198-A31 | Battery charger to be located behind driver's seat. | 1 |
| 1750-0343 | Battery charger E-ONE LPC 20. 120 volt inlet, 20 amp output. | 1 |
| 1750-0435 | Halogen cab headlights. TyphoonX, CIIX and QST2 only. | 1 |
| 1750-0449 | Momentary DPF regeneration override switch. | 1 |

| BODY COMPT LEFT SIDE |
|---|

| | | |
|---|---|---|
| 3100-0153 | Driver side body with full height 42" wide forward and 56" wide rearward enhanced extended compartmentation. Includes (1) 56" wide compartment over the wheel well. | 1 |

| BODY COMPT RIGHT SIDE | | |
|---|---|---|
| 3120-0283 | Officer side body with full height 42" wide forward and 56" wide rearward enhanced extended compartmentation. Includes (1) 56" wide compartment over the wheel well and one (1) storage tunnel. | 1 |

| BODY COMPT REAR | | |
|---|---|---|
| 3110-0013 | Full Height Rear Compartment with Officer Side Storage Tunnel. Includes smooth plate panels and storage access door with push button latch. | 1 |
| 3110-0052 | Bolt-on diamond plate tailboard (full width of rear compartment). Includes the enhanced extended side compartment frame work and handrails- (2) vertical on trailing edge of body and horizontal mounted handrail(s) below hosebed. | 1 |
| 3110-0092 | Enhanced Extended Compartmentation stepped down below hosebed level. Includes embossed diamond plate compartment tops. | 1 |

| DOORS | | |
|---|---|---|
| 3300-0017-004 | Door roll up short (up to 45") with satin finish ROM. Location(s): L2. | 1 |
| 3300-0017-016 | Door roll up short (up to 45") with satin finish ROM. Location(s): R2. | 1 |
| 3300-0019-003 | Door roll up tall (greater than 45") with satin finish ROM. Location(s): L1. | 1 |
| 3300-0019-005 | Door roll up tall (greater than 45") with satin finish ROM. Location(s): L3. | 1 |
| 3300-0019-015 | Door roll up tall (greater than 45") with satin finish ROM. Location(s): R1. | 1 |
| 3300-0019-017 | Door roll up tall (greater than 45") with satin finish ROM. Location(s): R3. | 1 |
| 3300-0019-027 | Door roll up tall (greater than 45") with satin finish ROM. Location(s): B1. | 1 |

| SHELVES | | |
|---|---|---|
| 3370-0025-101 | Shelf, permanent shelf. Locate in R1 at offset (above extrusion if applicable). | 1 |
| 3370-0025-102 | Shelf, permanent shelf. Locate in R3 at offset (above extrusion if applicable). | 1 |
| 3370-0052-003 | Adjustable shelf (J-Style) for non-transverse compartments 16" or greater in depth. Location: L1. | 1 |
| 3370-0052-004 | Adjustable shelf (J-Style) for non-transverse compartments 16" or greater in depth. Location: L2. | 1 |
| 3370-0052-005 | Adjustable shelf (J-Style) for non-transverse compartments 16" or greater in depth. Location: L3. | 1 |
| 3370-0052-027 | Adjustable shelf (J-Style) for non-transverse compartments 16" or greater in depth. Location: B1. | 1 |
| 3370-0054-003 | Tracks for adjustable shelf and/or adjustable tray in compartments 16" or greater in depth. Location: L1. | 1 |
| 3370-0054-004 | Tracks for adjustable shelf and/or adjustable tray in compartments 16" or greater in depth. Location: L2. | 1 |
| 3370-0054-005 | Tracks for adjustable shelf and/or adjustable tray in compartments 16" or greater in depth. Location: L3. | 1 |
| 3370-0054-027 | Tracks for adjustable shelf and/or adjustable tray in compartments 16" or greater in depth. Location: B1. | 1 |

| COVERS | | |
|---|---|---|
| 3305-0007-000-02 | Vinyl Red hose bed cover with attached rear flap(s). | 1 |
| 3305-0008-000-02 | Vinyl Red crosslay cover with attached side flaps. | 1 |

| PUMP MODULE | | |
|---|---|---|
| 3130-0167 | Pump module to be 76" wide (side to side). Includes upper, lower, crosswalk, speedlay and tranverse module(s) if applicable. | 1 |
| 3130-0523 | Side mount pump module. Extruded aluminum with runningboards. | 1 |
| 3130-0532 | Pump panel opening is 39" wide. Pumper / tanker only. | 1 |
| 3130-0540 | Pump module height is 80". Pumper / tanker only. | 1 |

| PUMP PANELS | | |
|---|---|---|
| 3134-0016 | Stainless steel driver and officer side pump panels. | 1 |
| 3134-0064 | The gauge panel(s) on the driver side of the Side Mount module to be hinged upward. Panel(s) to include (2) mechanical/pneumatic (as applicable to panel size) hold opens and latches. | 1 |

| | | |
|---|---|---|
| 3134-0143 | Officer side pump panel to be vertical hinged on forward extrusion. Panel to be (3) pieces with upper (2) panels secured in the closed position with push button latches. Upper panel to be held open with gas shock. | 1 |
| MISC PUMP PANEL OPTIONS | | |
| 4460-0003 | Pump panel tags color coded per NFPA compliance. | 1 |
| PUMP MODULE OPTIONS | | |
| 3136-0058 | E-ONE logo mounted one each side on pump module/preconnect panels. Logos to be sized as applicable to available space on panels. | 1 |
| 3136-0138 | Pump module storage pan. | 1 |
| 3136-0141 | Crosslay double 4.25" wide single stack to hold up to 200' of 2.0" DJ (each). | 1 |
| WATER TANK | | |
| 4010-0099 | Fill tower(s) to be located offset to officer side of water tank. | 1 |
| 4010-0177 | 780 Gallon "R" Water Tank. UPF Poly III color fill towers. Note: Any foam cell(s) and/or storage options through the tank will reduce the overall water capacity. | 1 |
| TANK PLUMBING | | |
| 4450-0010 | 2" tank fill Akron manual valve. | 1 |
| 4450-0119 | 3" tank to pump Akron manual valve w/4" tank connection. | 1 |
| LADDER STORAGE / RACKS | | |
| 3365-0028 | Hard Suction Storage Rack. Driver side compartment top. Includes spring hold downs and scuff plates behind spring mounts (as applicable). | 1 |
| 3365-0035 | Hard Suction Storage Rack. Officer side compartment top. Includes spring hold downs and scuff plates behind spring mounts (as applicable). | 1 |
| 3365-0049 | Brand of ladders capable of being carried on unit to be Alco-Lite. | 1 |
| 3365-0087-Z71 | The length of ladders capable of being stored shall be the following: 24' 2-section, 14' roof ladder and 10' attic ladder w/shoes. | 1 |
| 3365-0149-O97 | Storage tunnel capable of holding: (1) 2-section, (1) roof, (1) attic, (2) pike poles, (1) backboard in Officer. | 1 |
| HANDRAILS / STEPS | | |
| 3330-0277 | Innovative Controls dual lighted LED folding steps rear NFPA. Includes folding steps on driver side (staggered stepped as applicable with tailboard depth) for NFPA hosebed access and handrail mounted on driver side upper hosebed side (as applicable). | 1 |
| 3330-0279-060 | Innovative Controls dual lighted LED folding step. Location: officer side front compartment face. Each location requires a minimum of (1) handrail per NFPA. | 4 |
| 3330-0279-062 | Innovative Controls dual lighted LED folding step. Location: driver side front compartment face. Each location requires a minimum of (1) handrail per NFPA. | 4 |
| MISC BODY OPTIONS | | |
| 3340-0004 | Hosebed above the booster tank. Includes forward hosebed and tower(s) cover plate work (as applicable). Hosebed adjustable divider extrusion rearward of the furthest tower is to run full width of the hosebed (as is practical with other hosebed mounted equipment). | 1 |
| 3340-0035 | Divider Long. To run full length of hose bed (front to rear). | 1 |
| 3340-0058 | Recessed fuel fill driver side wheel well. | 1 |
| 3340-0074 | Body mainframe and hosebed side assemblies for a 85" high body. | 1 |
| 3340-0093 | Mud flaps, rear, black with E-ONE logo. | 1 |
| 3340-0110 | The rear of each hose bed divider to have a hand hold cut-out(s). | 1 |
| 3340-0145 | Rub rail for the body and pump area module(s). | 1 |
| 3340-0486 | Diamond plate single axle wheel well. Includes bolt-on composite wheel well liners and bolt-on polished alum fenderettes. | 1 |
| 3340-0681 | Body mainframe layout line to be 24". Includes body and all applicable modules. | 1 |
| SCBA BOTTLE STORAGE | | |
| 3320-0100 | Strap(s), loop style to retain SCBA bottle(s). Locate one per bottle in each exterior storage compartment. | 1 |
| 3320-0187-495 | Cast Products brand (1) SCBA bottle storage with gasketed door and push button latch. Door shall NOT cover the recessed fuel fill if located adjacent to the SCBA storage. Location: driver side rear wheel well offset forward | 1 |

| | | |
|---|---|---|
| 3320-0187-497 | Cast Products brand (1) SCBA bottle storage with gasketed door and push button latch. Door shall NOT cover the recessed fuel fill if located adjacent to the SCBA storage. Location: driver side rear wheel well offset rearward | 1 |
| 3320-0187-498 | Cast Products brand (1) SCBA bottle storage with gasketed door and push button latch. Door shall NOT cover the recessed fuel fill if located adjacent to the SCBA storage. Location: officer side rear wheel well offset forward | 1 |
| 3320-0187-500 | Cast Products brand (1) SCBA bottle storage with gasketed door and push button latch. Door shall NOT cover the recessed fuel fill if located adjacent to the SCBA storage. Location: officer side rear wheel well offset rearward | 1 |

| PUMPS | | |
|---|---|---|
| 4005-0031 | Rating 1500 GPM. | 1 |
| 4005-0196 | Hale QMAX 1000-2250 GPM single stage pump. Requires primer option. | 1 |

| PUMP CERTIFICATION | | |
|---|---|---|
| 4475-0000 | Pump certification 750-2250 GPM | 1 |

| PUMP OPTIONS | | |
|---|---|---|
| 4015-0008 | Zinc anodes for Hale pump (PR), (1) discharge side and (1) intake side. | 1 |
| 4015-0022 | Mechanical pump seal - Hale. | 1 |
| 4015-0052-198 | Steamers to be Flush. Location: driver's side. | 1 |
| 4015-0052-199 | Steamers to be Flush. Location: officer's side. | 1 |
| 4015-0098 | Manual operated master pump drain. The master drain shall be clearly marked and placed in accessible location on pump panel. | 1 |
| 4015-0210 | Pump cooler with Innovative Control 1/4 turn valve with "T" handle and label. | 1 |
| 4015-0238 | Hale electric primer (oil-less). | 1 |

| INTAKES | | |
|---|---|---|
| 4440-0005 | 2.5" Left Intake Akron Manual Valve. | 1 |

| INTAKE OPTIONS | | |
|---|---|---|
| 4445-0016 | Intake relief valve, Hale 2.5". | 1 |

| DISCHARGES AND PRECONNECTS | | |
|---|---|---|
| 4415-0012-654 | 1.5" Crosslay with Akron manual valve. Location: crosslay 1 & 2. | 2 |
| 4415-0014-581 | 2.5" Left Pump Panel Discharge Akron Manual Valve. Location: left side discharge 1. | 1 |
| 4415-0014-582 | 2.5" Left Pump Panel Discharge Akron Manual Valve. Location: left side discharge 2. | 1 |
| 4415-0016-584 | 2.5" Right Pump Panel Discharge Akron Manual Valve. Location: right side discharge 2. | 1 |
| 4415-0022-350 | 2.5" Left Rear Discharge Akron Manual Valve. Location: left rear discharge. | 1 |
| 4415-0041 | 3" Deck Gun Discharge, Akron manual valve. | 1 |
| 4415-0054-583 | 4" Right Pump Panel Discharge with 3" Akron Manual Valve (Waterous pumps noted location to be forward lower port). Location: right side discharge 1. | 1 |
| 4417-0106-L65 | Deck gun piping to be positioned centered in deck gun channel. | 1 |

| DISCHARGE OPTIONS | | |
|---|---|---|
| 4417-0175 | Innovative Controls push/pull valve controls with locking T handles. | 1 |
| 4417-0176 | Innovative Controls 3/4" bleeder/drain valve include lift lever with ergonomic grip. | 8 |
| 4417-0185 | Innovative Controls discharge and intake bezels with integral color code and verbiage for side mount pump panel. | 1 |

| PRESSURE GOVERNORS | | |
|---|---|---|
| 4465-0011 | Class 1 TPG pressure governor. Includes, water, oil, volt and tachometer. | 1 |

| GAUGES | | |
|---|---|---|
| 4435-0083 | Innovative Controls 10 LED SL series water tank level gauge. On pump panel. | 1 |
| 4435-0246 | 2.5" Innovative Controls stainless steel case pressure gauge (0-400) with color code bezel. | 8 |
| 4435-0247 | 4" Innovative Controls stainless steel case master pressure gauges with bezel. Intake 30-0-400, and discharge 0-400. | 1 |

| | | |
|---|---|---|
| **ELECTRICAL SYSTEMS** | | |
| 5010-0013-Y83 | Vehicle data recorder - 2009 / 2016 NFPA compliant. Includes occupant detection with display. Display location: inboard on driver's side overhead console. | 1 |
| 5010-0036 | V-MUX Electrical system for pumper / tanker / rescue. | 1 |
| 5010-0059-339 | VFD Text display for V-MUX electrical system. Location: center of dash. | 1 |
| **LIGHT BARS** | | |
| 5300-0504 | Whelen MKEZ7 1.5" standard mount for front light bar (PR). | 1 |
| 5300-0506-000-4V | Light bar LED color: Red/White with clear lenses | 1 |
| 5300-0511 | Light bar Whelen Freedom IV Model F4X7 72" with 8 LED modules. Location: Centered on the front cab roof. | 1 |
| **WARNING LIGHT PACKAGES** | | |
| 5550-0059-535 | Whelen Super LED lower level warning light package. Includes (8) red 600 LED light heads and (2) red 500 LED light heads w/chrome flanges. Locate side facing lights: at forward most position, centered in rear wheel well, and side facing at rear of body in rubrail if equipped. | 1 |
| **WARNING LIGHTS** | | |
| 5600-0078-479-06 | Whelen Super LED beacon (PR) model L31H with Red domes. Location rear upper body on aerial style brackets. | 1 |
| 5600-0105-170 | Hazard (door ajar) light 2" LED. Location: center overhead. | 1 |
| **SIRENS** | | |
| 5500-0015 | Whelen model 295SLSA1 siren with microphone (replaced 295HFSA1). | 1 |
| 5500-0024-170 | The electronic siren control is to be located on the center overhead. | 1 |
| **SPEAKERS** | | |
| 5510-0029-209 | Speaker, Federal Signal Dynamax ES100 with "E-ONE" grille through bumper. Location: driver side front bumper. | 1 |
| **DOT LIGHTING** | | |
| 5150-0007 | Whelen 600 series LED vertical mount tail lights. Includes LED stop/tail, arrow turn and halogen back-up lights with vertical Cast 3 housing and weatherproof connectors. | 1 |
| 5150-0017 | License plate light LED with chrome housing located at the rear of the body. | 1 |
| 5150-0025 | Marker light LED body/cab package. E-One custom cab and pumper or tanker body only. | 1 |
| 5150-0032 | Bracket license plate at rear of body. | 1 |
| **LIGHTS - COMPARTMENT, STEP & GROUND** | | |
| 5380-0077 | Compartment light package Amdor Luma-Bar LED for medium bodies. Includes one light per compartment (two if transverse). | 1 |
| 5380-0200 | Ground light package EON LED - small. | 1 |
| **LIGHTS - DECK AND SCENE** | | |
| 5390-0058-395 | Deck Lights - Truck-Lite LED model 81380 (PR). Location: rear body/beavertail area on the trailing edge up high. | 1 |
| 5390-0076 | Hose bed light Truck-Lite LED model 81380. Locate at front of hose bed. Switched with work light switch in cab. | 1 |
| 5390-0102 | Crosslay light Truck-Lite LED model 81380. Locate to rear of crosslay (SM) and forward of crosslay (TM as applicable). Switched with work light switch in cab. | 1 |
| **LIGHTS - NON-WARNING** | | |
| 5400-0003 | Engine compartment light (EA). | 1 |
| 5400-0010 | Incandescent pump compartment light (EA). | 1 |
| 5400-0054 | Spotlight Specialty 2150 hand held located on officer's side of cab dash w/12V receptacle. | 1 |
| 5400-0092 | Weldon pump panel LED light package with (3) lights per side pump panel. Pump panels over 45" may require additional lights. Side mount only. | 1 |
| **CONTROLS / SWITCHES** | | |

| | | |
|---|---|---|
| 5100-0000-199 | Foot switch to control air horns located officer's side. | 1 |
| 5100-0007-198 | Foot switch to control electronic siren located driver's side. | 1 |
| **MISC ELECTRICAL** | | |
| 1750-0082-762 | 12V power distribution module. Includes (6) battery hot and (6) switched hot circuits. 100 amps max (IATS). Location: behind officer's seat. | 1 |
| 5110-0017 | Back-up alarm 97 dB. | 1 |
| **LIGHTS - QUARTZ** | | |
| 5450-0290-407 | Light Whelen Pioneer model PFP1 12V with internal top raise pole mount. Includes switch accessible to driver. Location: driver side of pump module forward area. | 1 |
| 5450-0290-408 | Light Whelen Pioneer model PFP1 12V with internal top raise pole mount. Includes switch accessible to driver. Location: officer side of pump module forward area. | 1 |
| **ELBOWS** | | |
| 7400-0004 | Elbow 30 degree chrome swivel w/2.5"FNST x 2.5"MNST. | 4 |
| **ADAPTERS** | | |
| 7200-0026 | Swivel Connector 4" FNST x 5" Storz 30 Deg Elbow with Tethered Cap. | 1 |
| **HAND TOOLS** | | |
| 7600-0005 | Pike Pole Fiberglass 6'. | 1 |
| 7600-0007 | Pike Pole Fiberglass 10'. | 1 |
| **HOSE / NOZZLES** | | |
| 7700-0004 | Hard suction hose 6" X 10' with Pyrolite couplings. | 2 |
| **GROUND LADDERS** | | |
| 7800-0007 | Alco-Lite PRL-14' roof ladder. | 1 |
| 7800-0016 | Alco-Lite PEL-24' 2-section extension ladder. | 1 |
| 7800-0032 | Alco-Lite FL-10, 10' folding ladder w/safety shoes. | 1 |
| **MISC LOOSE EQUIPMENT** | | |
| 7900-0010 | Chrome Barrel Strainer 6" NST. | 1 |
| 7900-0014 | DOT Required Drive Away Kit - Kit includes three (3) triangular warning reflectors with carrying case. This kit is for the end user and is to remain with the truck. | 1 |
| **EXTERIOR PAINT** | | |
| 8100-0071 | Undercoating E-ONE. | 1 |
| 8100-0089 | All applicable pump/pre-connect application modules are to have a sanded finish (not painted job color). Includes upper and lower pump modules, crosswalk module and/or speedlay/pre-connect module (as applicable). Rear mounted body/pump module to be painted job color. | 1 |
| 8100-0116 | Rear body surface to have a sanded finish (not painted job color). Includes hinged doors that do not have discrete sales codes and removable panels. | 1 |
| 8100-0176-000-17 | Paint E-ONE chassis cab - Sikkens paint. Color: FLNA3225E-1 Red. | 1 |
| 8100-0182-000-17 | Paint Body - Small - For Pumpers, Rear Mounts, S/A Tankers/Wetsides and Rescues. Sikkens paint. Color: FLNA3225E-1 Red. | 1 |
| 8100-0186-000-39 | Paint exterior surface of outer steel wheels. Sikkens paint. Color: Job Color. | 1 |
| **INTERIOR PAINT** | | |
| 8150-0011 | The interior of the cab to be painted Zolatone gray. | 1 |
| **STRIPING** | | |
| 8300-0002-334-12 | NFPA Scotchlite Stripe - 4" wide and straight on front/sides of cab and sides/rear of body. Color: White. Location: bottom of stripe flush with top of bumper and straight back. | 1 |
| 8300-0042 | White rubrail scotchlite insert. | 1 |
| 8300-0084-000-72 | Chevron "A" style 6" printed sheet Scotchlite striping full width on rear of body. Includes rear facing extrusions, panels and doors. Colors to be Yellow/Red. | 1 |
| 8300-0313 | Yellow line to indicate designated standing / walking areas above 48" high in compliance with 2016 | 1 |

NFPA 1901. Line to be 1" wide. Steps, ladders and areas with a railing or structure at least 12" high are excluded from requiring the line.

| WARRANTY / STANDARD & EXTENDED | | |
|---|---|---|
| 9100-0000 | Standard 1 Year Warranty. | 1 |
| 9100-0003 | Lifetime Frame Warranty. | 1 |
| 9100-0004 | 10 Year/100,000 Mile Structural Warranty for Alum Cab / Body - Statement of Warranty. | 1 |
| 9100-0005 | 10 Year Stainless Steel Plumbing Warranty - Statement of Warranty. | 1 |
| 9100-0019 | 10 Year Limited Paint and Perforation Warranty - For Sikkens Paint. | 1 |
| 9100-0090 | 25 Year frame rail corrosion warranty. Includes liners (if equipped). | 1 |

| SUPPORT, DELIVERY, INSPECTIONS AND MANUALS | | |
|---|---|---|
| 9300-0009 | Manuals, Operator and Service CD-ROM. | 1 |
| 9300-0016 | Approval Drawings-Standard. | 1 |
| 9300-0316 | Fire Apparatus Safety Guide published by FAMA, latest edition. | 1 |

PRICE - 2017 E-ONE RESCUE PUMPER - CYCLONE CHASSIS - $448,310

# STATE OF OHIO TERM SCHEDULE

## 4200 SURFACE RD
## COLUMBUS, OH 43228

*Quote No: 57488*

8/27/2016

Quote Rev:27 Drawing Rev:8

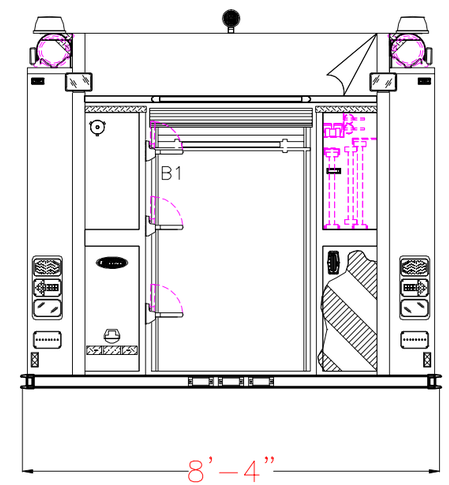


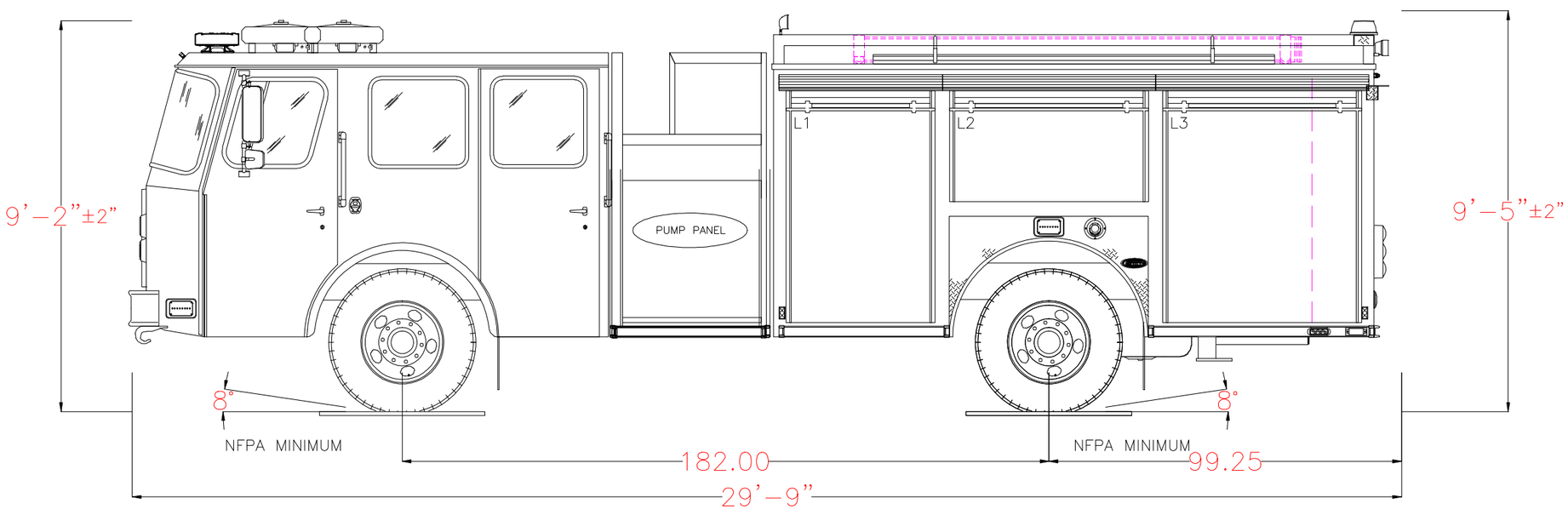


POWERED BY EZDRAW

Notice: This drawing provides a GENERAL REPRESENTATION of the vehicle configuration and should be used for evaluation purposes. The respective dimensions shown,including overall height and length, are estimates and may vary due to manufacturing processes. All other items such as lighting and fixtures, plumbing, compartmentation, and other generally assembled details are shown for REFERENCE ONLY and may not be a direct reflection of the final truck configuration. In ALL situations where this drawing may conflict with the specifications, THE SPECIFICATIONS, AS REFLECTED IN THE APPROVED SHOP ORDER, SHALL PREVAIL. Unless otherwise specified, the proposed apparatus will be manufactured to the latest NFPA recommendations as well as other applicable federally regulated safety regulations. E-One reserves the right to engineer and incorporate design improvements and changes without notice, while adhering to the intent of the specification.

| 1500 GPM PUMP<br>0 TOTAL VOLUME<br>0 TOTAL FOAM | HOSE LOADS : |
|---|---|
| | |
| | |
| | |
| | |

| | OPENING | | INTERIOR DIMENSIONS | | | | |
|---|---|---|---|---|---|---|---|
| COMPT. | WIDTH | HEIGHT | WIDTH | LOWER HEIGHT | LOWER DEPTH | UPPER HEIGHT | UPPER DEPTH |
| L1 | 40 | 59.75 | 42 | 30 | 26 | 26.75 | 26 |
| L2 | 54 | 25.75 | 56 | N/A | N/A | 26.75 | 26 |
| L3 | 54 | 59.75 | 56 | 30 | 26 | 26.75 | 26 |
| R1 | 40 | 59.75 | 42 | 30 | 26 | 26.75 | 12 |
| R2 | 54 | 25.75 | 56 | N/A | N/A | 26.75 | 12 |
| R3 | 54 | 59.75 | 56 | 30 | 26 | 26.75 | 12 |
| B1 | 36 | 45 | 38 | 30 | 26 | N/A | N/A |

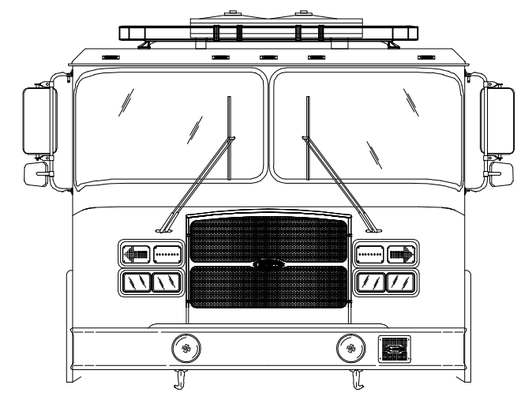

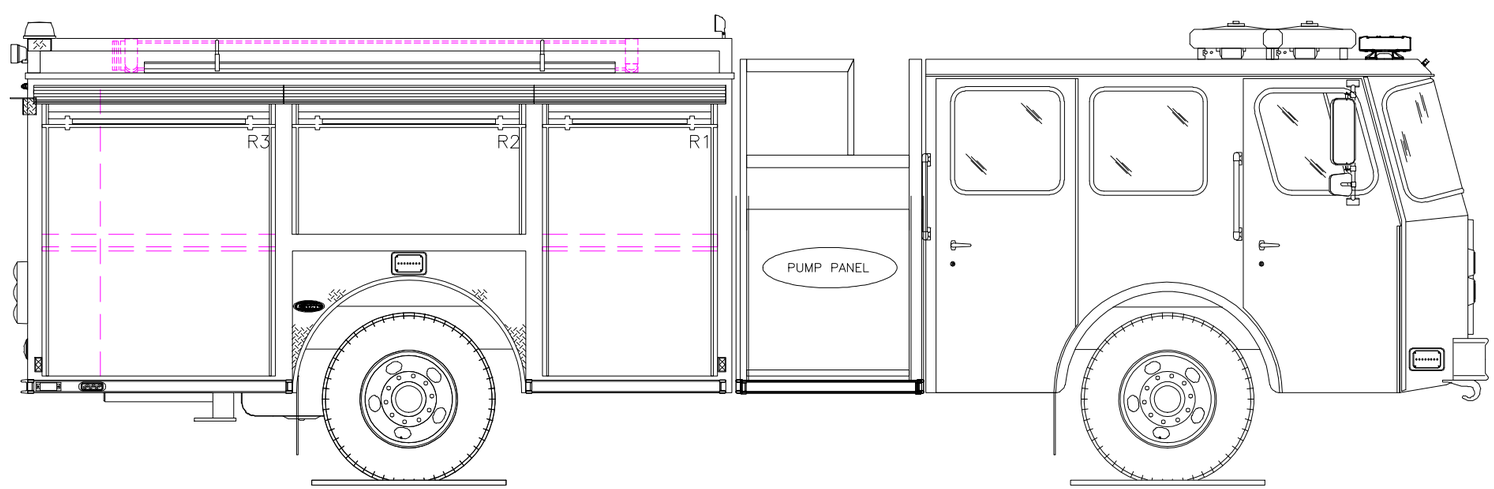


POWERED BY EZDRAW

Fire Apparatus Quotation for:

STATE OF OHIO TERM SCHEDULE

Quotation Number: 71279 Rev: 11

Unit Description: PAEM-CYC2

Quote Description: Pumper, Aluminum, eMAX, Cyclone II

| Salescode | Extended Description | Qty |
|---|---|---|
| **TESTING COMPLIANCE STANDARD** | | |
| 1001-0065 | The E-ONE supplied components of the vehicle shall meet the requirements of NFPA 1901, 2016 edition. | 1 |
| 3090-0002 | OAH. Unit has no overall height restrictions. | 1 |
| 3090-0004 | OAL. Unit has no overall length restrictions. | 1 |
| 3090-0007 | Hosebed hoseload allowance on the apparatus shall be 1200 lbs. | 1 |
| 3340-1137-12C | Equipment allowance on the apparatus shall be 2500 lbs. This allowance is in addition to the weight of the hoses and ground ladders listed in the shop order as applicable. | 1 |
| **BUMPERS** | | |
| 1160-0000 | Bumper 10" stainless steel. | 1 |
| 1160-0011 | 4" Front Bumper Extension. | 1 |
| **FRAME ASSEMBLY** | | |
| 1250-0011 | Rear underbody support frame. | 1 |
| 1250-0080 | Frame assembly with 10.25 x 3.5 x .375 powder coated galvanized rails. | 1 |
| **AXLE OPTIONS** | | |
| 1025-0011 | Meritor FL-943 front axle 20,000 lb. | 1 |
| 1025-0017 | Meritor RS-25-160 single rear axle 27,000 lb. capacity. | 1 |
| 1025-0028 | Koni shock absorbers for front axle - adjustable. | 1 |
| **SUSPENSIONS** | | |
| 1070-0001 | Rear suspension springs rated equal to the capacity of the axle. | 1 |
| **WHEEL OPTIONS** | | |
| 1050-0000 | Steel wheels for front axle (2). | 1 |
| 1050-0002 | Steel wheels for rear axle (4). | 1 |
| 1050-0007 | Front axle wheel trim kit. Includes stainless steel lug nut covers (chrome plated plastic if applicable) and center cap with E-ONE logo. Note: Center cap will have an inspection port IPO a logo if equipped with Stemco oil seals. | 1 |
| 1050-0008 | Rear axle (single) wheel trim kit. Includes stainless steel lug nut covers (chrome plated plastic if applicable) and center cap with E-ONE logo. E-ONE custom chassis w/steel wheels will have chrome plated plastic lug covers. | 1 |
| **TIRE OPTIONS** | | |
| 1060-0016 | Four Michelin 12R rear tires with XDN2 mud and snow tread. | 1 |
| 1060-0046 | Two Michelin 425 tires model XFE for front axle. | 1 |
| 1060-0117 | RWC AirGuard LED tire pressure monitoring valve stem caps (6) for single rear axle applications. | 1 |
| **BRAKE SYSTEMS** | | |
| 1100-0000 | 16-1/2'' x 6'' S-cam brakes with ArvinMeritor automatic slack adjusters for front axle. | 1 |

| | | |
|---|---|---|
| 1100-0002 | ArvinMeritor 16-1/2'' x 7'' S-cam brakes with cast brake drums for a single rear axle. | 1 |
| 1100-0005 | Brake system air 4X2/4X4. | 1 |
| 1100-0006 | Parking brake release mounted on the driver's side lower dash. | 1 |
| AIR SYSTEM OPTIONS | | |
| 1110-0000-001 | Inlet for air system. Location: driver door jamb. | 1 |
| 1110-0002 | Air dryer Bendix AD-9. | 1 |
| 1110-0006 | Air lines nylon. | 1 |
| 1110-0041 | Air horns Grover recessed in bumper (PR). | 1 |
| ENGINES & TRANSMISSIONS | | |
| 1200-0017 | Push-button transmission shift selector. | 1 |
| 1200-0021 | TransSynd synthetic transmission fluid for EVS 4000. | 1 |
| 1200-0097 | Electronic limiting of speed to 68 MPH maximum. Note: Max speed may be set at 65 MPH due to tire rating. | 1 |
| 1200-0316 | Eng/Trans Cummins ISX12 450HP with EVS4000 transmission. 2016 EPA Compliant. | 1 |
| SECONDARY BRAKING | | |
| 1125-0002 | Jacobs engine compression brake. | 1 |
| 1125-0023 | Transmission to seek second gear when Jacobs engine brake or Telma retarder is engaged. N/A with Trans retarder. | 1 |
| COOLING PACKAGE | | |
| 1800-0013 | Cooling system for use with Cyclone II X, Typhoon X, and Quest chassis. For use with 2010 / 2013 / 2016 EPA engines. Includes coolant recovery system. | 1 |
| FUEL SYSTEMS | | |
| 1350-0003 | Fuel system 50 gallon. | 1 |
| 1350-0012-670 | Fuel shut-off valve. Location: one (1) inlet side of OEM fuel filter. | 1 |
| 1350-0022 | Fuel line hose rubber. | 1 |
| ALTERNATOR | | |
| 1700-0005 | Alternator Leece Neville 320 amp. 320 amp SAE/275 amp NFPA. | 1 |
| BATTERIES | | |
| 1400-0002 | Battery four group 31 1000 CCA. | 1 |
| CHASSIS OPTIONS | | |
| 1680-0005 | Thermatic fan clutch. | 1 |
| 1680-0007 | Drivelines 1810. Required on 1550 lb/ft torque or greater engines. | 1 |
| 1680-0008 | Tow eyes front painted below bumper/cab (PR). | 1 |
| 1680-0011 | Tow eyes rear below body, painted. | 1 |
| 1680-0250-M58 | Diesel Exhaust Fluid (DEF) 5 gallon tank for 2013 / 2016 EPA engines. Location: left side below rear of cab. | 1 |
| 1680-0284 | Radiator mounted power steering cooler. | 1 |
| CAB MODEL | | |
| 1520-0008 | Cyclone II X medium cab with 58" CA | 1 |
| CAB ROOF TYPE | | |
| 1615-0007 | Delete rear vista roof windows. | 1 |
| 1615-0010 | Cab roof to be "flat" (non-vista). | 1 |
| CAB BADGE PACKAGE | | |

| | | |
|---|---|---|
| 1610-0000 | Cab and body to have applicable E-ONE logos. | 1 |
| CAB DOOR OPTIONS | | |
| 1550-0003 | Rear crew cab doors in the medium position. | 1 |
| 1550-0005 | Driver and officer cab door windows. Include forward vent windows. | 1 |
| 1550-0011 | Rear crew cab door windows. Includes manual roll-down actuation. Not available on Typhoon or CII with paddle style door latching. | 1 |
| 1550-0016 | Cab door panels ABS. | 1 |
| 1550-0025 | All cab doors shall have "L" style exterior latches. | 1 |
| 1550-0027 | Front cab door windows to have manual actuation. | 1 |
| 1550-0038-659 | (4) LED cab step area lighting. Locate each light on each cab door in the inboard position. Lights to be switched with door ajar. | 1 |
| 1550-0044 | All cab door kick plates to be made from diamond plate aluminum. | 1 |
| 1550-0059-000-G6 | Reflective Red/Lemon Yellow printed striping positioned in the "A" formation located on the cab door panels. | 1 |
| 1550-0077 | Interior cab door locks - manual. Will have manual actuation from each respective door. Includes barrel style key lock on each exterior cab door. | 1 |
| 1550-0083 | All cab exterior access doors to have CH751 keyed locks. | 1 |
| MIRRORS | | |
| 1670-0003 | Velvac 2010 mirrors. Door mounted west coast style with remote control and heat. | 1 |
| MISC EXTERIOR CAB OPTIONS | | |
| 1550-0020 | Windows cab side fixed driver's side. | 1 |
| 1550-0033 | Windows cab side fixed officer's side. | 1 |
| 1675-0022 | Pair of 18" handrails located just behind driver and officer front door one each side. | 1 |
| 1675-0023 | Pair of 18" handrails located just behind driver and officer rear door (ALS doors if equipped) one each side. | 1 |
| 1675-0030 | Mud flaps, front, black with E-ONE logo. | 1 |
| 1675-0047 | Rear cab wall to be 3/16" aluminum diamond plate. | 1 |
| 1675-0201 | Large radius cab wheel well. Includes bolt-on adjustable wheel well trim. | 1 |
| 1675-0202 | Mounting plate for battery charger receptacle, indicator and air inlet (if applicable). Plate to be removable brushed stainless steel. | 1 |
| HVAC | | |
| 1515-0018 | Air conditioning for the Typhoon X, CII X and Quest with roof top mounted condenser. | 1 |
| 1515-0053 | Controls for heating and air conditioning shall be located in the center dash area. (Lower area on Typhoon and CII with severe duty dash) | 1 |
| SEATS | | |
| 1510-0003 | Seats, Inc. brand 911 cab seats. | 1 |
| 1510-0008 | Seat color gray. | 1 |
| 1510-0035-147 | Universal air pack bottle bracket (EA). Location: officer's seat. | 1 |
| 1510-0035-148 | Universal air pack bottle bracket (EA). Location: rear facing driver's side. | 1 |
| 1510-0035-215 | Universal air pack bottle bracket (EA). Location: rear facing officer's side. | 1 |
| 1510-0038 | Driver seat 911 air ride. | 1 |
| 1510-0042 | Officer seat to be 911 fixed SCBA. | 1 |
| 1510-0050 | Rear facing 911 seat with SCBA driver's side. | 1 |
| 1510-0053 | Rear facing 911 seat with SCBA officer's side. | 1 |
| 1510-0234 | Seat cover material Turnout Tuff. | 1 |
| 1685-0031 | Seating capacity tag of four occupants. | 1 |

| | | |
|---|---|---|
| **MISC INTERIOR CAB OPTIONS** | | |
| 1685-0000 | Cab interior gray. Does not include engine cover or seat color. | 1 |
| 1685-0005 | Lexan sun visors, driver and officer's side overhead. | 1 |
| 1685-0168 | ABS Dash package. Includes center and officer side dash, lower kick panels and "A" post covers. | 1 |
| 1685-0187 | Severe duty engine cover, molded polyurethane. | 1 |
| **CAB ELECTRICAL OPTIONS** | | |
| 1750-0013-172 | Turn signal Whelen 600 LED amber arrow pair located upper headlight bezel. | 1 |
| 1750-0024-179-04 | Auto-Eject receptacle inlet 20 amp located outside driver's door next to handrail with a Yellow cover. | 1 |
| 1750-0029 | Switch horn button two position DOT/air horn. | 1 |
| 1750-0046-195 | Cab Headlights. Position: lower. | 1 |
| 1750-0072-593 | 12 VDC (or 24VDC) electrical outlet in the cab wired battery hot. Location: officer side dash. | 2 |
| 1750-0075 | English dominant main cab gauge cluster. | 1 |
| 1750-0158 | Dome Lts Red/White LED. Package includes two lights mounted in the front and two mounted in the rear of the cab. White light wired through door and light assembly switch. Red light through light assembly switch. | 1 |
| 1750-0198-A31 | Battery charger to be located behind driver's seat. | 1 |
| 1750-0343 | Battery charger E-ONE LPC 20. 120 volt inlet, 20 amp output. | 1 |
| 1750-0435 | Halogen cab headlights. TyphoonX, CIIX and QST2 only. | 1 |
| 1750-0449 | Momentary DPF regeneration override switch. | 1 |
| **BODY COMPT LEFT SIDE** | | |
| 3100-0245 | Driver side body with full height 60" wide forward and 56" wide rearward compartmentation. Includes (1) 56" wide compartment over the wheel well. Side Mount eMAX only. | 1 |
| **BODY COMPT RIGHT SIDE** | | |
| 3120-0403 | Officer side body with full height 60" wide forward and 56" wide rearward compartmentation. Includes (1) 56" wide compartment over the wheel well and one (1) storage tunnel located behind the upper (3) compartment back walls. | 1 |
| **BODY COMPT REAR** | | |
| 3110-0013 | Full Height Rear Compartment with Officer Side Storage Tunnel. Includes smooth plate panels and storage access door with push button latch. | 1 |
| 3340-0102 | Angled (Boston style) style tailboard corners. | 1 |
| 3340-0319 | Bolt-on diamond plate 10" tailboard (full width of body). For use with rear ladder application. Includes handrails- (1) vertical on trailing edge of body opposite side of ladder and handrail(s) horizontal below hosebed. | 1 |
| **BODY MODULE FRONT** | | |
| 3125-0005 | eMAX Forward body configuration - SM. Includes a lower double preconnect storage area, upper transverse storage area, rack in upper storage area for (2) backboards (vertical stored offset forward - sleeve each side of center pump access), center front pump access doors and removable center floor in upper area. | 1 |
| **DOORS** | | |
| 3300-0017-004 | Door roll up short (up to 45") with satin finish ROM. Location(s): L2. | 1 |
| 3300-0017-016 | Door roll up short (up to 45") with satin finish ROM. Location(s): R2. | 1 |
| 3300-0019-003 | Door roll up tall (greater than 45") with satin finish ROM. Location(s): L1. | 1 |
| 3300-0019-005 | Door roll up tall (greater than 45") with satin finish ROM. Location(s): L3. | 1 |
| 3300-0019-015 | Door roll up tall (greater than 45") with satin finish ROM. Location(s): R1. | 1 |

| | | |
|---|---|---|
| 3300-0019-017 | Door roll up tall (greater than 45") with satin finish ROM. Location(s): R3. | 1 |
| 3300-0019-027 | Door roll up tall (greater than 45") with satin finish ROM. Location(s): B1. | 1 |
| SHELVES | | |
| 3370-0025-101 | Shelf, permanent shelf. Locate in R1 at offset (above extrusion if applicable). | 1 |
| 3370-0025-102 | Shelf, permanent shelf. Locate in R3 at offset (above extrusion if applicable). | 1 |
| 3370-0052-003 | Adjustable shelf (J-Style) for non-transverse compartments 16" or greater in depth. Location: L1. | 1 |
| 3370-0052-004 | Adjustable shelf (J-Style) for non-transverse compartments 16" or greater in depth. Location: L2. | 1 |
| 3370-0052-005 | Adjustable shelf (J-Style) for non-transverse compartments 16" or greater in depth. Location: L3. | 1 |
| 3370-0052-027 | Adjustable shelf (J-Style) for non-transverse compartments 16" or greater in depth. Location: B1. | 1 |
| 3370-0053-579 | Adjustable shelf (C-Style) for non-transverse compartments up to 15.99" in depth. Location: B1 upper. | 1 |
| 3370-0054-003 | Tracks for adjustable shelf and/or adjustable tray in compartments 16" or greater in depth. Location: L1. | 1 |
| 3370-0054-004 | Tracks for adjustable shelf and/or adjustable tray in compartments 16" or greater in depth. Location: L2. | 1 |
| 3370-0054-005 | Tracks for adjustable shelf and/or adjustable tray in compartments 16" or greater in depth. Location: L3. | 1 |
| 3370-0054-027 | Tracks for adjustable shelf and/or adjustable tray in compartments 16" or greater in depth. Location: B1. | 1 |
| 3370-0055-579 | Tracks for adjustable shelf in shallow compartments up to 15.99" deep. Location: B1 upper. | 1 |
| COVERS | | |
| 3305-0007-000-02 | Vinyl Red hose bed cover with attached rear flap(s). | 1 |
| 3305-0016-000-02 | Vinyl Red speedlay side covers. | 1 |
| PUMP PANELS | | |
| 3134-0079 | The side pump intake / discharge panels to be stainless steel. eMAX only. | 1 |
| 3134-0080 | Pump operator control panel in driver side forward body compartment to be stainless steel. eMAX only. | 1 |
| 3134-0095 | The upper gauge panel on the enclosed pump panel is to be hinged forward. Side mount eMAX only. | 1 |
| MISC PUMP PANEL OPTIONS | | |
| 4460-0003 | Pump panel tags color coded per NFPA compliance. | 1 |
| 4460-0058 | Push-pull handles on the pump operator's panel to be oriented vertical. eMAX only. | 1 |
| PUMP MODULE OPTIONS | | |
| 3136-0058 | E-ONE logo mounted one each side on pump module/preconnect panels. Logos to be sized as applicable to available space on panels. | 1 |
| 3136-0205 | Removable Aluminum Speedlay Tray(s) with slotted floor to prevent the accumulation of water and allow for ventilation of wet hose. Includes vertical slotted hand hold cutouts on each end to facilitate easy removal of the hose tray. No lip, No grab rod. | 2 |
| WATER TANK | | |
| 4010-0099 | Fill tower(s) to be located offset to officer side of water tank. | 1 |
| 4010-0177 | 780 Gallon "R" Water Tank. UPF Poly III color fill towers. Note: Any foam cell(s) and/or storage options through the tank will reduce the overall water capacity. | 1 |
| TANK PLUMBING | | |

| | | |
|---|---|---|
| 4450-0010 | 2" tank fill Akron manual valve. | 1 |
| 4450-0121 | 3" Tank to pump Akron air actuated valve w/4" tank connection. | 1 |
| LADDER STORAGE / RACKS | | |
| 3365-0028 | Hard Suction Storage Rack. Driver side compartment top. Includes spring hold downs and scuff plates behind spring mounts (as applicable). | 1 |
| 3365-0035 | Hard Suction Storage Rack. Officer side compartment top. Includes spring hold downs and scuff plates behind spring mounts (as applicable). | 1 |
| 3365-0049 | Brand of ladders capable of being carried on unit to be Alco-Lite. | 1 |
| 3365-0087-Z71 | The length of ladders capable of being stored shall be the following: 24' 2-section, 14' roof ladder and 10' attic ladder w/shoes. | 1 |
| 3365-0149-O97 | Storage tunnel capable of holding: (1) 2-section, (1) roof, (1) attic, (2) pike poles, (1) backboard in Officer. | 1 |
| HANDRAILS / STEPS | | |
| 3110-0099-524 | NFPA hose bed access ladder. Zico model RL12 for increased visibility of rear outboard body mounted DOT/NFPA lighting. Includes required step lights and additional hand rail(s) if applicable. Location: rear of body driver side. | 1 |
| 3330-0158 | Step below side intake / discharge panel (PR). Gator grip diamond plate. Each location requires a minimum of (1) handrail / handhold per NFPA. eMAX only. | 1 |
| MISC BODY OPTIONS | | |
| 3340-0004 | Hosebed above the booster tank. Includes forward hosebed and tower(s) cover plate work (as applicable). Hosebed adjustable divider extrusion rearward of the furthest tower is to run full width of the hosebed (as is practical with other hosebed mounted equipment). | 1 |
| 3340-0035 | Divider Long. To run full length of hose bed (front to rear). | 1 |
| 3340-0049 | Hosebed storage pan. Locate in forward area of hosebed. | 1 |
| 3340-0058 | Recessed fuel fill driver side wheel well. | 1 |
| 3340-0075 | Body mainframe and hosebed side assemblies for a 90" high body. | 1 |
| 3340-0093 | Mud flaps, rear, black with E-ONE logo. | 1 |
| 3340-0110 | The rear of each hose bed divider to have a hand hold cut-out(s). | 1 |
| 3340-0282-I06 | Cab tilt switch and manual jack to be located: R1 low on forward wall. | 1 |
| 3340-0302 | Long hose bed divider(s) to be held short to allow for adjustability of the divider(s) with hose bed preconnect(s) if applicable per hose loading and option locations. | 1 |
| 3340-0486 | Diamond plate single axle wheel well. Includes bolt-on composite wheel well liners and bolt-on polished alum fenderettes. | 1 |
| 3340-0494 | Rubrail for the body. | 1 |
| 3340-0586 | Storage pan over eMAX transverse storage area(s). | 1 |
| 3340-0681 | Body mainframe layout line to be 24". Includes body and all applicable modules. | 1 |
| SCBA BOTTLE STORAGE | | |
| 3320-0100 | Strap(s), loop style to retain SCBA bottle(s). Locate one per bottle in each exterior storage compartment. | 1 |
| 3320-0187-495 | Cast Products brand (1) SCBA bottle storage with gasketed door and push button latch. Door shall NOT cover the recessed fuel fill if located adjacent to the SCBA storage. Location: driver side rear wheel well offset forward | 1 |
| 3320-0187-497 | Cast Products brand (1) SCBA bottle storage with gasketed door and push button latch. Door shall NOT cover the recessed fuel fill if located adjacent to the SCBA storage. Location: driver side rear wheel well offset rearward | 1 |
| 3320-0187-498 | Cast Products brand (1) SCBA bottle storage with gasketed door and push button latch. Door shall NOT cover the recessed fuel fill if located adjacent to the SCBA storage. Location: officer side rear wheel well offset forward | 1 |
| 3320-0187-500 | Cast Products brand (1) SCBA bottle storage with gasketed door and push button latch. Door shall | 1 |

| | | |
|---|---|---|
| | NOT cover the recessed fuel fill if located adjacent to the SCBA storage. Location: officer side rear wheel well offset rearward | |
| PUMPS | | |
| 4005-0031 | Rating 1500 GPM. | 1 |
| 4005-0204 | E-ONE 1250-1500 GPM pump, single stage. Requires primer option. | 1 |
| PUMP CERTIFICATION | | |
| 4475-0000 | Pump certification 750-2250 GPM | 1 |
| PUMP OPTIONS | | |
| 4015-0053-198 | Steamers to be Flush + 1". Location: driver's side. | 1 |
| 4015-0053-199 | Steamers to be Flush + 1". Location: officer's side. | 1 |
| 4015-0098 | Manual operated master pump drain. The master drain shall be clearly marked and placed in accessible location on pump panel. | 1 |
| 4015-0133 | Anode for Darley pump - (1) intake side. | 1 |
| 4015-0210 | Pump cooler with Innovative Control 1/4 turn valve with "T" handle and label. | 1 |
| 4015-0240 | Darley electric primer (oil-less). | 1 |
| INTAKES | | |
| 4440-0005 | 2.5" Left Intake Akron Manual Valve. | 1 |
| INTAKE OPTIONS | | |
| 4445-0048 | Intake pressure relief valve, Task Force Tips. | 1 |
| DISCHARGES AND PRECONNECTS | | |
| 4415-0014-581 | 2.5" Left Pump Panel Discharge Akron Manual Valve. Location: left side discharge 1. | 1 |
| 4415-0014-582 | 2.5" Left Pump Panel Discharge Akron Manual Valve. Location: left side discharge 2. | 1 |
| 4415-0016-584 | 2.5" Right Pump Panel Discharge Akron Manual Valve. Location: right side discharge 2. | 1 |
| 4415-0018 | 2.5" left front hose bed discharge Akron manual valve. | 1 |
| 4415-0041 | 3" Deck Gun Discharge, Akron manual valve. | 1 |
| 4415-0054-583 | 4" Right Pump Panel Discharge with 3" Akron Manual Valve (Waterous pumps noted location to be forward lower port). Location: right side discharge 1. | 1 |
| 4415-0065 | 1.5" Double Speedlay with Akron Manual Valves. | 1 |
| 4417-0106-685 | Deck gun piping to be positioned driver side of hose bed storage pan. | 1 |
| DISCHARGE OPTIONS | | |
| 4417-0175 | Innovative Controls push/pull valve controls with locking T handles. | 1 |
| 4417-0176 | Innovative Controls 3/4" bleeder/drain valve include lift lever with ergonomic grip. | 8 |
| 4417-0185 | Innovative Controls discharge and intake bezels with integral color code and verbiage for side mount pump panel. | 1 |
| PRESSURE GOVERNORS | | |
| 4465-0011 | Class 1 TPG pressure governor. Includes, water, oil, volt and tachometer. | 1 |
| GAUGES | | |
| 4435-0083 | Innovative Controls 10 LED SL series water tank level gauge. On pump panel. | 1 |
| 4435-0246 | 2.5" Innovative Controls stainless steel case pressure gauge (0-400) with color code bezel. | 8 |
| 4435-0247 | 4" Innovative Controls stainless steel case master pressure gauges with bezel. Intake 30-0-400, and discharge 0-400. | 1 |
| ELECTRICAL SYSTEMS | | |

| | | |
|---|---|---|
| 5010-0013-Y83 | Vehicle data recorder - 2009 / 2016 NFPA compliant. Includes occupant detection with display. Display location: inboard on driver's side overhead console. | 1 |
| 5010-0036 | V-MUX Electrical system for pumper / tanker / rescue. | 1 |
| 5010-0059-339 | VFD Text display for V-MUX electrical system. Location: center of dash. | 1 |
| LIGHT BARS | | |
| 5300-0504 | Whelen MKEZ7 1.5" standard mount for front light bar (PR). | 1 |
| 5300-0506-000-4V | Light bar LED color: Red/White with clear lenses | 1 |
| 5300-0511 | Light bar Whelen Freedom IV Model F4X7 72" with 8 LED modules. Location: Centered on the front cab roof. | 1 |
| WARNING LIGHT PACKAGES | | |
| 5550-0059-535 | Whelen Super LED lower level warning light package. Includes (8) red 600 LED light heads and (2) red 500 LED light heads w/chrome flanges. Locate side facing lights: at forward most position, centered in rear wheel well, and side facing at rear of body in rubrail if equipped. | 1 |
| WARNING LIGHTS | | |
| 5600-0078-479-06 | Whelen Super LED beacon (PR) model L31H with Red domes. Location rear upper body on aerial style brackets. | 1 |
| 5600-0105-170 | Hazard (door ajar) light 2" LED. Location: center overhead. | 1 |
| SIRENS | | |
| 5500-0015 | Whelen model 295SLSA1 siren with microphone (replaced 295HFSA1). | 1 |
| 5500-0024-170 | The electronic siren control is to be located on the center overhead. | 1 |
| SPEAKERS | | |
| 5510-0029-209 | Speaker, Federal Signal Dynamax ES100 with "E-ONE" grille through bumper. Location: driver side front bumper. | 1 |
| DOT LIGHTING | | |
| 5150-0017 | License plate light LED with chrome housing located at the rear of the body. | 1 |
| 5150-0025 | Marker light LED body/cab package. E-One custom cab and pumper or tanker body only. | 1 |
| 5150-0032 | Bracket license plate at rear of body. | 1 |
| 5150-0056 | Whelen 600 series LED vertical mount tail lights. Includes LED stop/tail, arrow turn and back-up lights with vertical Cast 3 housing and weatherproof connectors. | 1 |
| LIGHTS - COMPARTMENT, STEP & GROUND | | |
| 5380-0144 | Compartment light package Amdor Luma-Bar LED for medium bodies. Includes two lights per compartment (four if transverse). | 1 |
| 5380-0182 | Ground light package EON LED - large. | 1 |
| LIGHTS - DECK AND SCENE | | |
| 5390-0007 | Deck/scene light circuit wiring through chassis reverse. Requires rear deck or scene light. | 1 |
| 5390-0076 | Hose bed light Truck-Lite LED model 81380. Locate at front of hose bed. Switched with work light switch in cab. | 1 |
| 5390-0152-396 | Whelen 600 series gradient Super LED surface mounted scene lights (PR) with weatherproof connectors. Switch in cab (driver and officer side lights switched separately). Locate (1) each side rear compartment face up high. | 1 |
| LIGHTS - NON-WARNING | | |
| 5400-0003 | Engine compartment light (EA). | 1 |
| 5400-0010 | Incandescent pump compartment light (EA). | 1 |
| 5400-0054 | Spotlight Specialty 2150 hand held located on officer's side of cab dash w/12V receptacle. | 1 |

| | | |
|---|---|---|
| 5400-0137 | Pump panel LED light package for side mount eMAX. Includes (6) TecNiq EON lights with S/S housings, located (3) each side above lower side intake/discharge panels. Includes S/S light shields. SM eMAX only. | 1 |
| CONTROLS / SWITCHES | | |
| 5100-0000-199 | Foot switch to control air horns located officer's side. | 1 |
| 5100-0007-198 | Foot switch to control electronic siren located driver's side. | 1 |
| MISC ELECTRICAL | | |
| 5110-0017 | Back-up alarm 97 dB. | 1 |
| LIGHTS - QUARTZ | | |
| 5450-0123-429 | Light Whelen Pioneer Plus LED model PFP2 12V with PBAPEDD pedestal mount. Includes switch in cab (side facing lights switched separately). Location(s): driver side forward compartment top. | 1 |
| 5450-0123-431 | Light Whelen Pioneer Plus LED model PFP2 12V with PBAPEDD pedestal mount. Includes switch in cab (side facing lights switched separately). Location(s): officer side forward compartment top. | 1 |
| ELBOWS | | |
| 7400-0004 | Elbow 30 degree chrome swivel w/2.5"FNST x 2.5"MNST. | 3 |
| ADAPTERS | | |
| 7200-0026 | Swivel Connector 4" FNST x 5" Storz 30 Deg Elbow with Tethered Cap. | 1 |
| HAND TOOLS | | |
| 7600-0005 | Pike Pole Fiberglass 6'. | 1 |
| 7600-0007 | Pike Pole Fiberglass 10'. | 1 |
| HOSE / NOZZLES | | |
| 7700-0004 | Hard suction hose 6" X 10' with Pyrolite couplings. | 2 |
| GROUND LADDERS | | |
| 7800-0007 | Alco-Lite PRL-14' roof ladder. | 1 |
| 7800-0016 | Alco-Lite PEL-24' 2-section extension ladder. | 1 |
| 7800-0032 | Alco-Lite FL-10, 10' folding ladder w/safety shoes. | 1 |
| MISC LOOSE EQUIPMENT | | |
| 7900-0010 | Chrome Barrel Strainer 6" NST. | 1 |
| 7900-0014 | DOT Required Drive Away Kit - Kit includes three (3) triangular warning reflectors with carrying case. This kit is for the end user and is to remain with the truck. | 1 |
| EXTERIOR PAINT | | |
| 8100-0071 | Undercoating E-ONE. | 1 |
| 8100-0116 | Rear body surface to have a sanded finish (not painted job color). Includes hinged doors that do not have discrete sales codes and removable panels. | 1 |
| 8100-0176-000-17 | Paint E-ONE chassis cab - Sikkens paint. Color: FLNA3225E-1 Red. | 1 |
| 8100-0182-000-17 | Paint Body - Small - For Pumpers, Rear Mounts, S/A Tankers/Wetsides and Rescues. Sikkens paint. Color: FLNA3225E-1 Red. | 1 |
| 8100-0186-000-39 | Paint exterior surface of outer steel wheels. Sikkens paint. Color: Job Color. | 1 |
| INTERIOR PAINT | | |
| 8150-0011 | The interior of the cab to be painted Zolatone gray. | 1 |
| STRIPING | | |
| 8300-0002-334-12 | NFPA Scotchlite Stripe - 4" wide and straight on front/sides of cab and sides/rear of body. Color: White. Location: bottom of stripe flush with top of bumper and straight back. | 1 |

| | | |
|---|---|---|
| 8300-0042 | White rubrail scotchlite insert. | 1 |
| 8300-0084-000-72 | Chevron "A" style 6" printed sheet Scotchlite striping full width on rear of body. Includes rear facing extrusions, panels and doors. Colors to be Yellow/Red. | 1 |
| 8300-0313 | Yellow line to indicate designated standing / walking areas above 48" high in compliance with 2016 NFPA 1901. Line to be 1" wide. Steps, ladders and areas with a railing or structure at least 12" high are excluded from requiring the line. | 1 |
| WARRANTY / STANDARD & EXTENDED | | |
| 9100-0000 | Standard 1 Year Warranty. | 1 |
| 9100-0003 | Lifetime Frame Warranty. | 1 |
| 9100-0004 | 10 Year/100,000 Mile Structural Warranty for Alum Cab / Body - Statement of Warranty. | 1 |
| 9100-0005 | 10 Year Stainless Steel Plumbing Warranty - Statement of Warranty. | 1 |
| 9100-0019 | 10 Year Limited Paint and Perforation Warranty - For Sikkens Paint. | 1 |
| 9100-0090 | 25 Year frame rail corrosion warranty. Includes liners (if equipped). | 1 |
| SUPPORT, DELIVERY, INSPECTIONS AND MANUALS | | |
| 9300-0009 | Manuals, Operator and Service CD-ROM. | 1 |
| 9300-0016 | Approval Drawings-Standard. | 1 |
| 9300-0316 | Fire Apparatus Safety Guide published by FAMA, latest edition. | 1 |

PRICE - 2017 E-ONE EMAX PUMPER - CYCLONE CHASSIS - $462,265

# STATE OF OHIO TERM SCHEDULE

## 4200 SURFACE RD
## COLUMBUS, OH 43228

*Quote No: 71279*

8/27/2016

Quote Rev:11 Drawing Rev:3

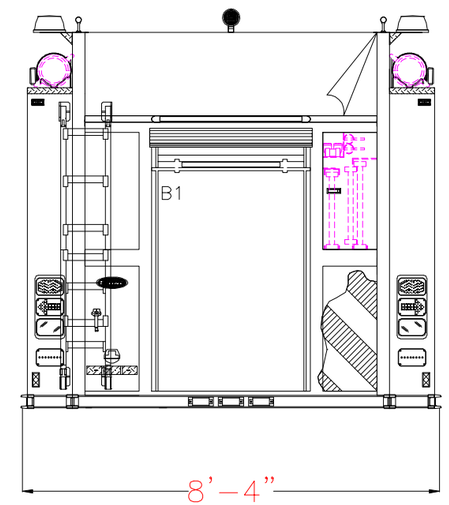


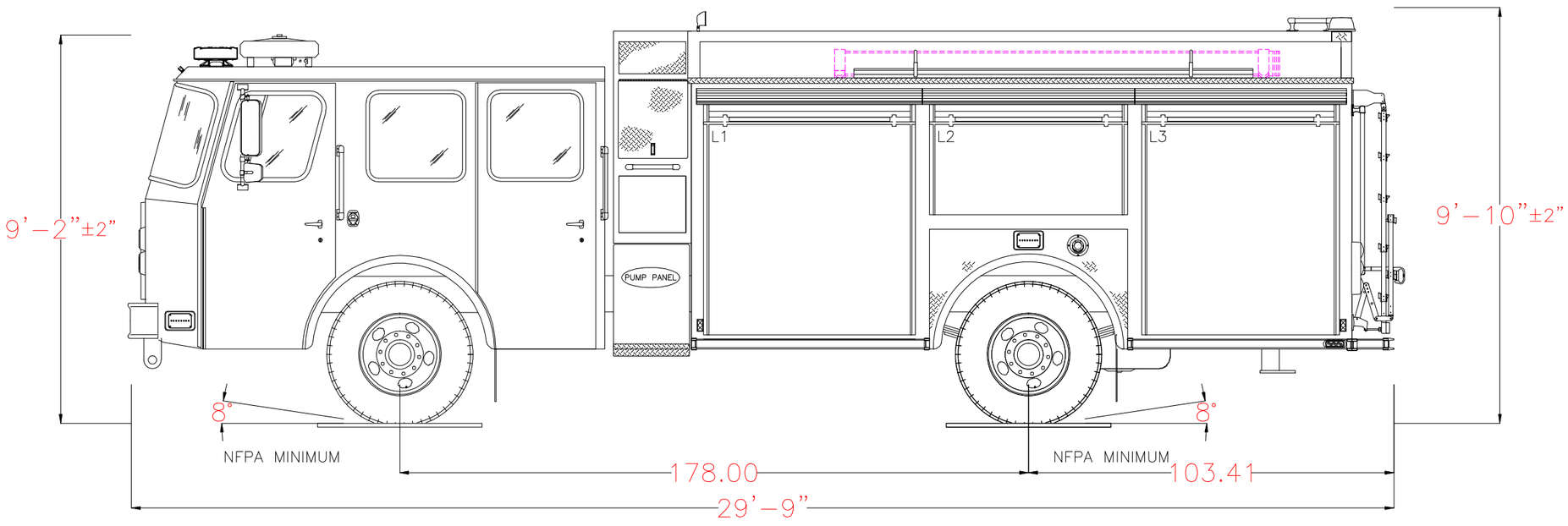


POWERED BY EZDRAW

Notice This drawing provides a GENERAL REPRESENTATION of the vehicle configuration and should be used for evaluation purposes. The respective dimensions shown,including overall height and length, are estimates and may vary due to manufacturing processes. All other items such as lighting and fixtures, plumbing, compartmentation, and other generally assembled details are shown for REFERENCE ONLY and may not be a direct reflection of the final truck configuration. In ALL situations where this drawing may conflict with the specifications, THE SPECIFICATIONS, AS REFLECTED IN THE APPROVED SHOP ORDER, SHALL PREVAIL. Unless otherwise specified, the proposed apparatus will be manufactured to the latest NFPA recommendations as well as other applicable federally regulated safety regulations. E-One reserves the right to engineer and incorporate design improvements and changes without notice, while adhering to the intent of the specification.

| 1500 GPM PUMP<br>0 TOTAL VOLUME<br>0 TOTAL FOAM | HOSE LOADS : |
|---|---|
| | |
| | |
| | |
| | |

| | OPENING | | INTERIOR DIMENSIONS | | | | |
|---|---|---|---|---|---|---|---|
| COMPT. | WIDTH | HEIGHT | WIDTH | LOWER HEIGHT | LOWER DEPTH | UPPER HEIGHT | UPPER DEPTH |
| L1 | 58 | 59.75 | 60 | 30 | 26 | 26.75 | 26 |
| L2 | 54 | 25.75 | 56 | N/A | N/A | 26.75 | 26 |
| L3 | 54 | 59.75 | 56 | 30 | 26 | 26.75 | 26 |
| R1 | 58 | 59.75 | 60 | 30 | 26 | 26.75 | 12 |
| R2 | 54 | 25.75 | 56 | N/A | N/A | 26.75 | 12 |
| R3 | 54 | 59.75 | 56 | 30 | 26 | 26.75 | 12 |
| B1 | 36 | 45 | 38 | 30 | 26 | N/A | N/A |

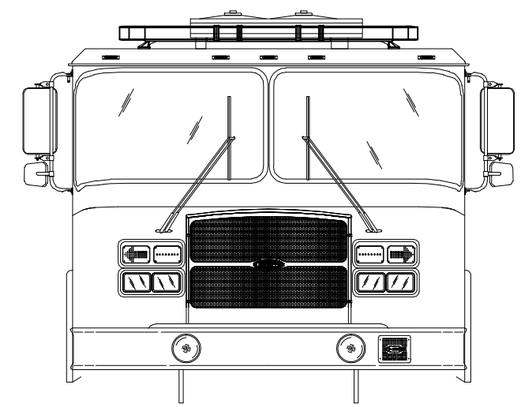

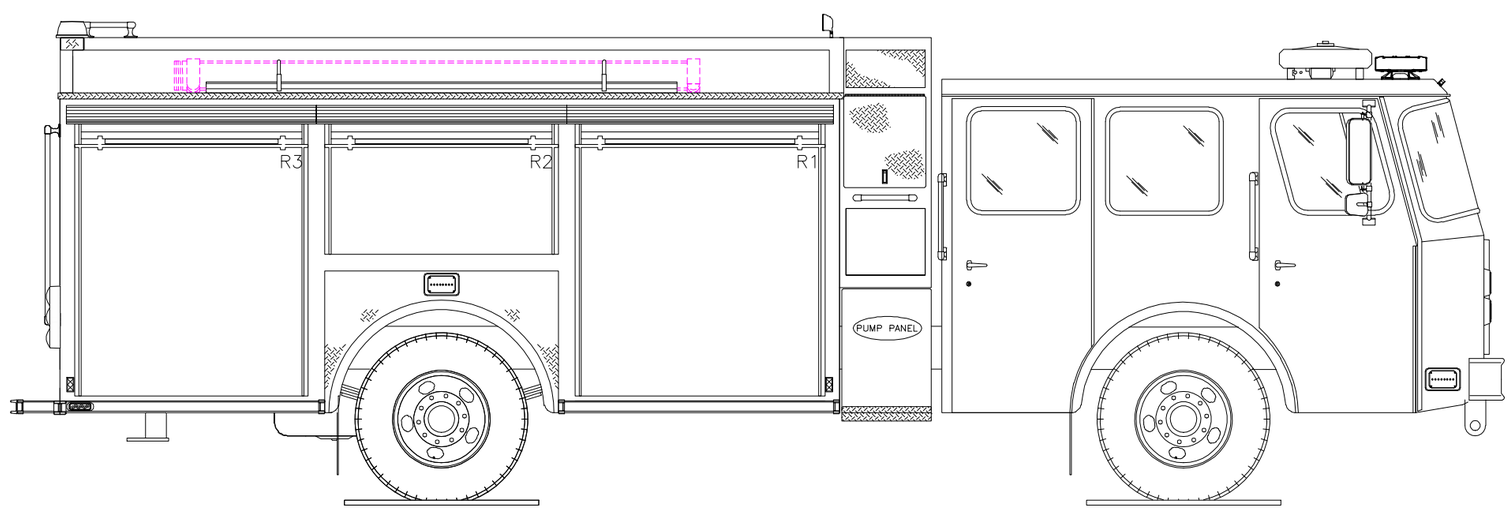


POWERED BY EZDRAW

Fire Apparatus Quotation for:
STATE OF OHIO TERM SCHEDULE

Quotation Number: 77025 Rev: 12

Unit Description: PAEM-CHSH
Quote Description: Pumper, Aluminum, eMAX, Cyclone Hush

| Salescode | Extended Description | Qty |
|---|---|---|
| **TESTING COMPLIANCE STANDARD** | | |
| 1001-0065 | The E-ONE supplied components of the vehicle shall meet the requirements of NFPA 1901, 2016 edition. | 1 |
| 3090-0002 | OAH. Unit has no overall height restrictions. | 1 |
| 3090-0004 | OAL. Unit has no overall length restrictions. | 1 |
| 3090-0007 | Hosebed hoseload allowance on the apparatus shall be 1200 lbs. | 1 |
| 3340-1137-12C | Equipment allowance on the apparatus shall be 2500 lbs. This allowance is in addition to the weight of the hoses and ground ladders listed in the shop order as applicable. | 1 |
| **BUMPERS** | | |
| 1160-0000 | Bumper 10" stainless steel. | 1 |
| 1160-0011 | 4" Front Bumper Extension. | 1 |
| **FRAME ASSEMBLY** | | |
| 1250-0011 | Rear underbody support frame. | 1 |
| 1250-0080 | Frame assembly with 10.25 x 3.5 x .375 powder coated galvanized rails. | 1 |
| 1250-0083 | Frame liner 9.375 x 3.125 x .375, galvanized and powder coated. | 1 |
| **AXLE OPTIONS** | | |
| 1025-0018 | Meritor RS-30-185 single rear axle 31,000 lb. capacity. | 1 |
| 1025-0029 | Front shock absorbers. | 1 |
| 1025-0170 | Meritor MFS18 front axle rated at 18,000 lb. | 1 |
| **SUSPENSIONS** | | |
| 1070-0012 | Reyco rear suspension springs rated equal to the capacity of the axle. | 1 |
| **WHEEL OPTIONS** | | |
| 1050-0000 | Steel wheels for front axle (2). | 1 |
| 1050-0002 | Steel wheels for rear axle (4). | 1 |
| 1050-0007 | Front axle wheel trim kit. Includes stainless steel lug nut covers (chrome plated plastic if applicable) and center cap with E-ONE logo. Note: Center cap will have an inspection port IPO a logo if equipped with Stemco oil seals. | 1 |
| 1050-0008 | Rear axle (single) wheel trim kit. Includes stainless steel lug nut covers (chrome plated plastic if applicable) and center cap with E-ONE logo. E-ONE custom chassis w/steel wheels will have chrome plated plastic lug covers. | 1 |
| **TIRE OPTIONS** | | |
| 1060-0001 | Two Michelin 315 tires model XZA-1 for front axle. | 1 |
| 1060-0017 | Four Michelin 315 rear tires with XDN2 mud and snow tread. | 1 |
| 1060-0117 | RWC AirGuard LED tire pressure monitoring valve stem caps (6) for single rear axle applications. | 1 |
| **BRAKE SYSTEMS** | | |
| 1100-0000 | 16-1/2'' x 6'' S-cam brakes with ArvinMeritor automatic slack adjusters for front axle. | 1 |
| 1100-0002 | ArvinMeritor 16-1/2'' x 7'' S-cam brakes with cast brake drums for a single rear axle. | 1 |
| 1100-0005 | Brake system air 4X2/4X4. | 1 |
| 1100-0006 | Parking brake release mounted on the driver's side lower dash. | 1 |

| | | |
|---|---|---|
| **AIR SYSTEM OPTIONS** | | |
| 1110-0000-001 | Inlet for air system. Location: driver door jamb. | 1 |
| 1110-0002 | Air dryer Bendix AD-9. | 1 |
| 1110-0006 | Air lines nylon. | 1 |
| 1110-0041 | Air horns Grover recessed in bumper (PR). | 1 |
| **ENGINES & TRANSMISSIONS** | | |
| 1200-0017 | Push-button transmission shift selector. | 1 |
| 1200-0020 | TransSynd synthetic transmission fluid for EVS3000. | 1 |
| 1200-0097 | Electronic limiting of speed to 68 MPH maximum. Note: Max speed may be set at 65 MPH due to tire rating. | 1 |
| 1200-0280 | Transfer Case for HS chassis - single speed with rear axle and pump declutches. | 1 |
| 1200-0314 | Eng/Trans Cummins ISL 450HP/EVS3000 2016 EPA compliant engine. For use with HS rear engine chassis only. | 1 |
| **SECONDARY BRAKING** | | |
| 1125-0002 | Jacobs engine compression brake. | 1 |
| 1125-0023 | Transmission to seek second gear when Jacobs engine brake or Telma retarder is engaged. N/A with Trans retarder. | 1 |
| **EXHAUST OPTIONS** | | |
| 1225-0008 | Wrap exhaust with heat tape from the turbo down to the flex pipe. Inspect after install for tears in material. Wrap outside with wire mesh to ensure material remains affixed. | 1 |
| **COOLING PACKAGE** | | |
| 1800-0028 | Cooling system for use with Cyclone HS and Quest HS chassis. For use with 2013 / 2016 EPA engines. | 1 |
| **FUEL SYSTEMS** | | |
| 1350-0012-670 | Fuel shut-off valve. Location: one (1) inlet side of OEM fuel filter. | 1 |
| 1350-0022 | Fuel line hose rubber. | 1 |
| 1350-0056 | Fuel system w/65 gallon tank below cab. HS chassis only. | 1 |
| **ALTERNATOR** | | |
| 1700-0005 | Alternator Leece Neville 320 amp. 320 amp SAE/275 amp NFPA. | 1 |
| **BATTERIES** | | |
| 1400-0002 | Battery four group 31 1000 CCA. | 1 |
| **CHASSIS OPTIONS** | | |
| 1680-0005 | Thermatic fan clutch. | 1 |
| 1680-0006 | Drivelines 1710. | 1 |
| 1680-0008 | Tow eyes front painted below bumper/cab (PR). | 1 |
| 1680-0011 | Tow eyes rear below body, painted. | 1 |
| 1680-0250-M58 | Diesel Exhaust Fluid (DEF) 5 gallon tank for 2013 / 2016 EPA engines. Location: left side below rear of cab. | 1 |
| 1680-0284 | Radiator mounted power steering cooler. | 1 |
| **CAB MODEL** | | |
| 1520-0125 | Cyclone HS medium cab with 58" C/A. | 1 |
| **CAB ROOF TYPE** | | |
| 1615-0007 | Delete rear vista roof windows. | 1 |
| **CAB ROOF TYPE** | | |
| 1615-0010 | Cab roof to be "flat" (non-vista). | 1 |
| **CAB BADGE PACKAGE** | | |
| 1610-0000 | Cab and body to have applicable E-ONE logos. | 1 |
| **CAB DOOR OPTIONS** | | |
| 1550-0003 | Rear crew cab doors in the medium position. | 1 |
| 1550-0005 | Driver and officer cab door windows. Include forward vent windows. | 1 |
| 1550-0011 | Rear crew cab door windows. Includes manual roll-down actuation. Not available on Typhoon or CII | 1 |

| | | |
|---|---|---|
| | with paddle style door latching. | |
| 1550-0016 | Cab door panels ABS. | 1 |
| 1550-0025 | All cab doors shall have "L" style exterior latches. | 1 |
| 1550-0027 | Front cab door windows to have manual actuation. | 1 |
| 1550-0038-659 | (4) LED cab step area lighting. Locate each light on each cab door in the inboard position. Lights to be switched with door ajar. | 1 |
| 1550-0044 | All cab door kick plates to be made from diamond plate aluminum. | 1 |
| 1550-0059-000-G6 | Reflective Red/Lemon Yellow printed striping positioned in the "A" formation located on the cab door panels. | 1 |
| 1550-0077 | Interior cab door locks - manual. Will have manual actuation from each respective door. Includes barrel style key lock on each exterior cab door. | 1 |
| 1550-0083 | All cab exterior access doors to have CH751 keyed locks. | 1 |

| MIRRORS | | |
|---|---|---|
| 1670-0003 | Velvac 2010 mirrors. Door mounted west coast style with remote control and heat. | 1 |

| MISC EXTERIOR CAB OPTIONS | | |
|---|---|---|
| 1550-0020 | Windows cab side fixed driver's side. | 1 |
| 1550-0033 | Windows cab side fixed officer's side. | 1 |
| 1675-0022 | Pair of 18" handrails located just behind driver and officer front door one each side. | 1 |
| 1675-0023 | Pair of 18" handrails located just behind driver and officer rear door (ALS doors if equipped) one each side. | 1 |
| 1675-0030 | Mud flaps, front, black with E-ONE logo. | 1 |
| 1675-0047 | Rear cab wall to be 3/16" aluminum diamond plate. | 1 |
| 1675-0202 | Mounting plate for battery charger receptacle, indicator and air inlet (if applicable). Plate to be removable brushed stainless steel. | 1 |

| HVAC | | |
|---|---|---|
| 1515-0017 | Air conditioning for the Typhoon X, CII X and Quest with Cummins ISC/ISL engine and radiator mounted condenser. | 1 |
| 1515-0053 | Controls for heating and air conditioning shall be located in the center dash area. (Lower area on Typhoon and CII with severe duty dash) | 1 |
| 1515-0070 | Air conditioning for HS cab with Cummins ISL engine. Includes center front cab evaporator and roof top mounted condenser. | 1 |

| SEATS | | |
|---|---|---|
| 1510-0003 | Seats, Inc. brand 911 cab seats. | 1 |
| 1510-0008 | Seat color gray. | 1 |
| 1510-0035-147 | Universal air pack bottle bracket (EA). Location: officer's seat. | 1 |
| 1510-0035-148 | Universal air pack bottle bracket (EA). Location: rear facing driver's side. | 1 |
| 1510-0035-215 | Universal air pack bottle bracket (EA). Location: rear facing officer's side. | 1 |
| 1510-0038 | Driver seat 911 air ride. | 1 |
| 1510-0042 | Officer seat to be 911 fixed SCBA. | 1 |
| 1510-0050 | Rear facing 911 seat with SCBA driver's side. | 1 |
| 1510-0053 | Rear facing 911 seat with SCBA officer's side. | 1 |
| 1510-0234 | Seat cover material Turnout Tuff. | 1 |
| 1685-0031 | Seating capacity tag of four occupants. | 1 |

| MISC INTERIOR CAB OPTIONS | | |
|---|---|---|
| 1685-0000 | Cab interior gray. Does not include engine cover or seat color. | 1 |
| 1685-0005 | Lexan sun visors, driver and officer's side overhead. | 1 |
| 1685-0327 | ABS Dash package. Includes ABS center dash, officer side dash and "A" post covers. Lower kick panels are aluminum painted to match cab interior. | 1 |

| CAB ELECTRICAL OPTIONS | | |
|---|---|---|
| 1750-0013-172 | Turn signal Whelen 600 LED amber arrow pair located upper headlight bezel. | 1 |
| 1750-0024-179-04 | Auto-Eject receptacle inlet 20 amp located outside driver's door next to handrail with a Yellow cover. | 1 |
| 1750-0029 | Switch horn button two position DOT/air horn. | 1 |
| 1750-0046-195 | Cab Headlights. Position: lower. | 1 |
| 1750-0072-D45 | 12 VDC (or 24VDC) electrical outlet in the cab wired battery hot. Location: officer's switch panel. | 2 |

| | | |
|---|---|---|
| 1750-0075 | English dominant main cab gauge cluster. | 1 |
| 1750-0158 | Dome Lts Red/White LED. Package includes two lights mounted in the front and two mounted in the rear of the cab. White light wired through door and light assembly switch. Red light through light assembly switch. | 1 |
| 1750-0198-A31 | Battery charger to be located behind driver's seat. | 1 |
| 1750-0343 | Battery charger E-ONE LPC 20. 120 volt inlet, 20 amp output. | 1 |
| 1750-0435 | Halogen cab headlights. TyphoonX, CIIX and QST2 only. | 1 |
| 1750-0449 | Momentary DPF regeneration override switch. | 1 |
| 1750-0450 | Steering wheel with switch pods IPOS. Includes wiper functions, master warning sw, air horn sw, aux brake on/off and (3) aux switches. Required with Typhoon and CII equipped with 4Front and QST2. (Requires seperate programming options to activate aux switches) | 1 |
| BODY COMPT LEFT SIDE | | |
| 3100-0392 | Driver side body with full height 26" and 50" wide forward compts, 56" wide over wheel compt and 52" wide rearward compt. Includes slide-back rear side compt for engine access. Side Mount eMAX HS only. | 1 |
| BODY COMPT RIGHT SIDE | | |
| 3120-0565 | Officer side body with full height 26" and 50" wide forward compts, 56" wide over wheel compt and 52" wide rearward compt. Includes slide-back rear side compt for engine access and one (1) storage tunnel. eMAX HS only. | 1 |
| BODY COMPT REAR | | |
| 3110-0295 | HS pumper / rescue pumper rear body with officer side storage tunnel. Includes center radiator mesh, smooth plate panels and storage access door with push button latch. | 1 |
| 3110-0301 | Bolt-on diamond plate 10" tailboard (full width of body) with center integral slide-out step. Includes handrails- (1) vertical on trailing edge of body opposite side of ladder and handrail(s) horizontal below hosebed. | 1 |
| 3340-0102 | Angled (Boston style) style tailboard corners. | 1 |
| BODY MODULE FRONT | | |
| 3125-0005 | eMAX Forward body configuration - SM. Includes a lower double preconnect storage area, upper transverse storage area, rack in upper storage area for (2) backboards (vertical stored offset forward - sleeve each side of center pump access), center front pump access doors and removable center floor in upper area. | 1 |
| DOORS | | |
| 3300-0017-005 | Door roll up short (up to 45") with satin finish ROM. Location(s): L3. | 1 |
| 3300-0017-017 | Door roll up short (up to 45") with satin finish ROM. Location(s): R3. | 1 |
| 3300-0019-003 | Door roll up tall (greater than 45") with satin finish ROM. Location(s): L1. | 1 |
| 3300-0019-004 | Door roll up tall (greater than 45") with satin finish ROM. Location(s): L2. | 1 |
| 3300-0019-006 | Door roll up tall (greater than 45") with satin finish ROM. Location(s): L4. | 1 |
| 3300-0019-015 | Door roll up tall (greater than 45") with satin finish ROM. Location(s): R1. | 1 |
| 3300-0019-016 | Door roll up tall (greater than 45") with satin finish ROM. Location(s): R2. | 1 |
| 3300-0019-018 | Door roll up tall (greater than 45") with satin finish ROM. Location(s): R4. | 1 |
| SHELVES | | |
| 3370-0025-109 | Shelf, permanent shelf. Locate in R2 at offset (above extrusion if applicable). | 1 |
| 3370-0025-110 | Shelf, permanent shelf. Locate in R4 at offset (above extrusion if applicable). | 1 |
| 3370-0052-004 | Adjustable shelf (J-Style) for non-transverse compartments 16" or greater in depth. Location: L2. | 1 |
| 3370-0052-005 | Adjustable shelf (J-Style) for non-transverse compartments 16" or greater in depth. Location: L3. | 1 |
| 3370-0052-006 | Adjustable shelf (J-Style) for non-transverse compartments 16" or greater in depth. Location: L4. | 1 |
| 3370-0052-015 | Adjustable shelf (J-Style) for non-transverse compartments 16" or greater in depth. Location: R1. | 1 |
| 3370-0053-579 | Adjustable shelf (C-Style) for non-transverse compartments up to 15.99" in depth. Location: B1 upper. | 1 |
| 3370-0054-004 | Tracks for adjustable shelf and/or adjustable tray in compartments 16" or greater in depth. Location: L2. | 1 |
| 3370-0054-005 | Tracks for adjustable shelf and/or adjustable tray in compartments 16" or greater in depth. Location: | 1 |

| | | |
|---|---|---|
| | L3. | |
| 3370-0054-006 | Tracks for adjustable shelf and/or adjustable tray in compartments 16" or greater in depth. Location: L4. | 1 |
| 3370-0054-015 | Tracks for adjustable shelf and/or adjustable tray in compartments 16" or greater in depth. Location: R1. | 1 |
| 3370-0055-579 | Tracks for adjustable shelf in shallow compartments up to 15.99" deep. Location: B1 upper. | 1 |

| COVERS | | |
|---|---|---|
| 3305-0007-000-02 | Vinyl Red hose bed cover with attached rear flap(s). | 1 |
| 3305-0016-000-02 | Vinyl Red speedlay side covers. | 1 |
| PUMP PANELS | | |
| 3134-0079 | The side pump intake / discharge panels to be stainless steel. eMAX only. | 1 |
| 3134-0080 | Pump operator control panel in driver side forward body compartment to be stainless steel. eMAX only. | 1 |
| 3134-0095 | The upper gauge panel on the enclosed pump panel is to be hinged forward. Side mount eMAX only. | 1 |

| MISC PUMP PANEL OPTIONS | | |
|---|---|---|
| 4460-0003 | Pump panel tags color coded per NFPA compliance. | 1 |
| 4460-0058 | Push-pull handles on the pump operator's panel to be oriented vertical. eMAX only. | 1 |

| PUMP MODULE OPTIONS | | |
|---|---|---|
| 3136-0058 | E-ONE logo mounted one each side on pump module/preconnect panels. Logos to be sized as applicable to available space on panels. | 1 |
| 3136-0205 | Removable Aluminum Speedlay Tray(s) with slotted floor to prevent the accumulation of water and allow for ventilation of wet hose. Includes vertical slotted hand hold cutouts on each end to facilitate easy removal of the hose tray. No lip, No grab rod. | 2 |

| WATER TANK | | |
|---|---|---|
| 4010-0099 | Fill tower(s) to be located offset to officer side of water tank. | 1 |
| 4010-0261 | 750 Gallon "T" Water Tank. UPF Poly III color fill towers. Note: Any foam cell(s) will reduce the overall water capacity. | 1 |

| TANK PLUMBING | | |
|---|---|---|
| 4450-0010 | 2" tank fill Akron manual valve. | 1 |
| 4450-0121 | 3" Tank to pump Akron air actuated valve w/4" tank connection. | 1 |

| LADDER STORAGE / RACKS | | |
|---|---|---|
| 3365-0028 | Hard Suction Storage Rack. Driver side compartment top. Includes spring hold downs and scuff plates behind spring mounts (as applicable). | 1 |
| 3365-0035 | Hard Suction Storage Rack. Officer side compartment top. Includes spring hold downs and scuff plates behind spring mounts (as applicable). | 1 |
| 3365-0049 | Brand of ladders capable of being carried on unit to be Alco-Lite. | 1 |
| 3365-0087-Z71 | The length of ladders capable of being stored shall be the following: 24' 2-section, 14' roof ladder and 10' attic ladder w/shoes. | 1 |
| 3365-0149-0GU | Storage tunnel capable of holding: (1) 2-section, (1) roof, (1) backboard in officer. | 1 |
| 3365-0484 | Recessed folding ladder and pike pole storage compartment located left rear of body up high. Compartment sized to store a 10' ladder with feet and (2) 12' pike poles. | 1 |

| HANDRAILS / STEPS | | |
|---|---|---|
| 3110-0099-524 | NFPA hose bed access ladder. Zico model RL12 for increased visibility of rear outboard body mounted DOT/NFPA lighting. Includes required step lights and additional hand rail(s) if applicable. Location: rear of body driver side. | 1 |
| 3330-0158 | Step below side intake / discharge panel (PR). Gator grip diamond plate. Each location requires a minimum of (1) handrail / handhold per NFPA. eMAX only. | 1 |
| 3330-0218 | Step rear 10" deep intermediate. Step to be embossed treadplate and located between engine access door and lower air intake. | 1 |
| 3330-0221 | Sides of intermediate rear step to be cut out. | 1 |

| MISC BODY OPTIONS |
|---|

| | | |
|---|---|---|
| 3340-0035 | Divider Long. To run full length of hose bed (front to rear). | 1 |
| 3340-0049 | Hosebed storage pan. Locate in forward area of hosebed. | 1 |
| 3340-0093 | Mud flaps, rear, black with E-ONE logo. | 1 |
| 3340-0094 | Body mainframe and hosebed side assemblies for a 95" high body. | 1 |
| 3340-0110 | The rear of each hose bed divider to have a hand hold cut-out(s). | 1 |
| 3340-0282-I06 | Cab tilt switch and manual jack to be located: R1 low on forward wall. | 1 |
| 3340-0486 | Diamond plate single axle wheel well. Includes bolt-on composite wheel well liners and bolt-on polished alum fenderettes. | 1 |
| 3340-0494 | Rubrail for the body. | 1 |
| 3340-0586 | Storage pan over eMAX transverse storage area(s). | 1 |
| 3340-0680 | Body mainframe layout line to be 23". Includes body and all applicable modules. | 1 |
| 3340-0917 | Recessed fuel fill driver side pump panel area. | 1 |
| 3340-0922 | Hosebed rearward of the booster tank. Includes diamond plate tank cover, engine access provision and adjustable divider extrusions. HS pumper only. | 1 |

| SCBA BOTTLE STORAGE | | |
|---|---|---|
| 3320-0100 | Strap(s), loop style to retain SCBA bottle(s). Locate one per bottle in each exterior storage compartment. | 1 |
| 3320-0187-495 | Cast Products brand (1) SCBA bottle storage with gasketed door and push button latch. Door shall NOT cover the recessed fuel fill if located adjacent to the SCBA storage. Location: driver side rear wheel well offset forward | 1 |
| 3320-0187-497 | Cast Products brand (1) SCBA bottle storage with gasketed door and push button latch. Door shall NOT cover the recessed fuel fill if located adjacent to the SCBA storage. Location: driver side rear wheel well offset rearward | 1 |
| 3320-0187-498 | Cast Products brand (1) SCBA bottle storage with gasketed door and push button latch. Door shall NOT cover the recessed fuel fill if located adjacent to the SCBA storage. Location: officer side rear wheel well offset forward | 1 |
| 3320-0187-500 | Cast Products brand (1) SCBA bottle storage with gasketed door and push button latch. Door shall NOT cover the recessed fuel fill if located adjacent to the SCBA storage. Location: officer side rear wheel well offset rearward | 1 |

| PUMPS | | |
|---|---|---|
| 4005-0031 | Rating 1500 GPM. | 1 |
| 4005-0206 | E-ONE 1250-1500 GPM pump, single stage for use with HS chassis. Requires primer option. | 1 |

| PUMP CERTIFICATION | | |
|---|---|---|
| 4475-0000 | Pump certification 750-2250 GPM | 1 |

| PUMP OPTIONS | | |
|---|---|---|
| 4015-0053-198 | Steamers to be Flush + 1". Location: driver's side. | 1 |
| 4015-0053-199 | Steamers to be Flush + 1". Location: officer's side. | 1 |
| 4015-0098 | Manual operated master pump drain. The master drain shall be clearly marked and placed in accessible location on pump panel. | 1 |
| 4015-0133 | Anode for Darley pump - (1) intake side. | 1 |
| 4015-0210 | Pump cooler with Innovative Control 1/4 turn valve with "T" handle and label. | 1 |
| 4015-0240 | Darley electric primer (oil-less). | 1 |

| INTAKES | | |
|---|---|---|
| 4440-0005 | 2.5" Left Intake Akron Manual Valve. | 1 |

| INTAKE OPTIONS | | |
|---|---|---|
| 4445-0048 | Intake pressure relief valve, Task Force Tips. | 1 |

| DISCHARGES AND PRECONNECTS | | |
|---|---|---|
| 4415-0014-581 | 2.5" Left Pump Panel Discharge Akron Manual Valve. Location: left side discharge 1. | 1 |
| 4415-0014-582 | 2.5" Left Pump Panel Discharge Akron Manual Valve. Location: left side discharge 2. | 1 |

| DISCHARGES AND PRECONNECTS | | |
|---|---|---|
| 4415-0016-584 | 2.5" Right Pump Panel Discharge Akron Manual Valve. Location: right side discharge 2. | 1 |
| 4415-0022-350 | 2.5" Left Rear Discharge Akron Manual Valve. Location: left rear discharge. | 1 |

| | | |
|---|---|---|
| 4415-0041 | 3" Deck Gun Discharge, Akron manual valve. | 1 |
| 4415-0054-583 | 4" Right Pump Panel Discharge with 3" Akron Manual Valve (Waterous pumps noted location to be forward lower port). Location: right side discharge 1. | 1 |
| 4415-0065 | 1.5" Double Speedlay with Akron Manual Valves. | 1 |
| 4417-0106-685 | Deck gun piping to be positioned driver side of hose bed storage pan. | 1 |

| DISCHARGE OPTIONS | | |
|---|---|---|
| 4417-0175 | Innovative Controls push/pull valve controls with locking T handles. | 1 |
| 4417-0176 | Innovative Controls 3/4" bleeder/drain valve include lift lever with ergonomic grip. | 8 |
| 4417-0185 | Innovative Controls discharge and intake bezels with integral color code and verbiage for side mount pump panel. | 1 |

| PRESSURE GOVERNORS | | |
|---|---|---|
| 4465-0011 | Class 1 TPG pressure governor. Includes, water, oil, volt and tachometer. | 1 |

| GAUGES | | |
|---|---|---|
| 4435-0083 | Innovative Controls 10 LED SL series water tank level gauge. On pump panel. | 1 |
| 4435-0246 | 2.5" Innovative Controls stainless steel case pressure gauge (0-400) with color code bezel. | 8 |
| 4435-0247 | 4" Innovative Controls stainless steel case master pressure gauges with bezel. Intake 30-0-400, and discharge 0-400. | 1 |

| ELECTRICAL SYSTEMS | | |
|---|---|---|
| 5010-0036 | V-MUX Electrical system for pumper / tanker / rescue. | 1 |
| 5010-0049 | Vehicle data recorder - 2009 / 2016 NFPA compliant. Includes occupant detection shown in multiplex display. E-ONE chassis only. | 1 |
| 5010-0055-592 | Vista IV display for V-MUX electrical system. Location: driver side dash. | 1 |

| LIGHT BARS | | |
|---|---|---|
| 5300-0504 | Whelen MKEZ7 1.5" standard mount for front light bar (PR). | 1 |
| 5300-0506-000-4V | Light bar LED color: Red/White with clear lenses | 1 |
| 5300-0511 | Light bar Whelen Freedom IV Model F4X7 72" with 8 LED modules. Location: Centered on the front cab roof. | 1 |

| WARNING LIGHT PACKAGES | | |
|---|---|---|
| 5550-0059-535 | Whelen Super LED lower level warning light package. Includes (8) red 600 LED light heads and (2) red 500 LED light heads w/chrome flanges. Locate side facing lights: at forward most position, centered in rear wheel well, and side facing at rear of body in rubrail if equipped. | 1 |

| WARNING LIGHTS | | |
|---|---|---|
| 5600-0078-479-06 | Whelen Super LED beacon (PR) model L31H with Red domes. Location rear upper body on aerial style brackets. | 1 |
| 5600-0105-170 | Hazard (door ajar) light 2" LED. Location: center overhead. | 1 |

| SIRENS | | |
|---|---|---|
| 5500-0015 | Whelen model 295SLSA1 siren with microphone (replaced 295HFSA1). | 1 |
| 5500-0024-170 | The electronic siren control is to be located on the center overhead. | 1 |

| SPEAKERS | | |
|---|---|---|
| 5510-0029-209 | Speaker, Federal Signal Dynamax ES100 with "E-ONE" grille through bumper. Location: driver side front bumper. | 1 |

| DOT LIGHTING | | |
|---|---|---|
| 5150-0017 | License plate light LED with chrome housing located at the rear of the body. | 1 |
| 5150-0025 | Marker light LED body/cab package. E-One custom cab and pumper or tanker body only. | 1 |
| 5150-0032 | Bracket license plate at rear of body. | 1 |
| 5150-0056 | Whelen 600 series LED vertical mount tail lights. Includes LED stop/tail, arrow turn and back-up lights with vertical Cast 3 housing and weatherproof connectors. | 1 |

| LIGHTS - COMPARTMENT, STEP & GROUND |
|---|

| | | |
|---|---|---|
| 5380-0144 | Compartment light package Amdor Luma-Bar LED for medium bodies. Includes two lights per compartment (four if transverse). | 1 |
| 5380-0182 | Ground light package EON LED - large. | 1 |
| **LIGHTS - DECK AND SCENE** | | |
| 5390-0007 | Deck/scene light circuit wiring through chassis reverse. Requires rear deck or scene light. | 1 |
| 5390-0076 | Hose bed light Truck-Lite LED model 81380. Locate at front of hose bed. Switched with work light switch in cab. | 1 |
| 5390-0152-396 | Whelen 600 series gradient Super LED surface mounted scene lights (PR) with weatherproof connectors. Switch in cab (driver and officer side lights switched separately). Locate (1) each side rear compartment face up high. | 1 |
| **LIGHTS - NON-WARNING** | | |
| 5400-0003 | Engine compartment light (EA). | 1 |
| 5400-0010 | Incandescent pump compartment light (EA). | 1 |
| 5400-0054 | Spotlight Specialty 2150 hand held located on officer's side of cab dash w/12V receptacle. | 1 |
| 5400-0137 | Pump panel LED light package for side mount eMAX. Includes (6) TecNiq EON lights with S/S housings, located (3) each side above lower side intake/discharge panels. Includes S/S light shields. SM eMAX only. | 1 |
| **CONTROLS / SWITCHES** | | |
| 5100-0000-199 | Foot switch to control air horns located officer's side. | 1 |
| 5100-0007-198 | Foot switch to control electronic siren located driver's side. | 1 |
| **MISC ELECTRICAL** | | |
| 5110-0017 | Back-up alarm 97 dB. | 1 |
| **LIGHTS - QUARTZ** | | |
| 5450-0123-429 | Light Whelen Pioneer Plus LED model PFP2 12V with PBAPEDD pedestal mount. Includes switch in cab (side facing lights switched separately). Location(s): driver side forward compartment top. | 1 |
| 5450-0123-431 | Light Whelen Pioneer Plus LED model PFP2 12V with PBAPEDD pedestal mount. Includes switch in cab (side facing lights switched separately). Location(s): officer side forward compartment top. | 1 |
| **ELBOWS** | | |
| 7400-0004 | Elbow 30 degree chrome swivel w/2.5"FNST x 2.5"MNST. | 4 |
| **ADAPTERS** | | |
| 7200-0026 | Swivel Connector 4" FNST x 5" Storz 30 Deg Elbow with Tethered Cap. | 1 |
| **HAND TOOLS** | | |
| 7600-0005 | Pike Pole Fiberglass 6'. | 1 |
| 7600-0007 | Pike Pole Fiberglass 10'. | 1 |
| **HOSE / NOZZLES** | | |
| 7700-0004 | Hard suction hose 6" X 10' with Pyrolite couplings. | 2 |
| **GROUND LADDERS** | | |
| 7800-0007 | Alco-Lite PRL-14' roof ladder. | 1 |
| 7800-0016 | Alco-Lite PEL-24' 2-section extension ladder. | 1 |
| 7800-0032 | Alco-Lite FL-10, 10' folding ladder w/safety shoes. | 1 |
| **MISC LOOSE EQUIPMENT** | | |
| 7900-0010 | Chrome Barrel Strainer 6" NST. | 1 |
| 7900-0014 | DOT Required Drive Away Kit - Kit includes three (3) triangular warning reflectors with carrying case. This kit is for the end user and is to remain with the truck. | 1 |
| **EXTERIOR PAINT** | | |
| 8100-0071 | Undercoating E-ONE. | 1 |
| 8100-0176-000-17 | Paint E-ONE chassis cab - Sikkens paint. Color: FLNA3225E-1 Red. | 1 |
| 8100-0182-000-17 | Paint Body - Small - For Pumpers, Rear Mounts, S/A Tankers/Wetsides and Rescues. Sikkens paint. | 1 |

| | | |
|---|---|---|
| | Color: FLNA3225E-1 Red. | |
| 8100-0186-000-39 | Paint exterior surface of outer steel wheels. Sikkens paint. Color: Job Color. | 1 |
| 8100-0361 | Rear body surface to have a painted job color finish. Includes hinged doors that do not have discrete sales codes and removable panels. | 1 |

| INTERIOR PAINT | | |
|---|---|---|
| 8150-0011 | The interior of the cab to be painted Zolatone gray. | 1 |

| STRIPING | | |
|---|---|---|
| 8300-0002-334-12 | NFPA Scotchlite Stripe - 4" wide and straight on front/sides of cab and sides/rear of body. Color: White. Location: bottom of stripe flush with top of bumper and straight back. | 1 |
| 8300-0042 | White rubrail scotchlite insert. | 1 |
| 8300-0084-000-72 | Chevron "A" style 6" printed sheet Scotchlite striping full width on rear of body. Includes rear facing extrusions, panels and doors. Colors to be Yellow/Red. | 1 |
| 8300-0313 | Yellow line to indicate designated standing / walking areas above 48" high in compliance with 2016 NFPA 1901. Line to be 1" wide. Steps, ladders and areas with a railing or structure at least 12" high are excluded from requiring the line. | 1 |

| WARRANTY / STANDARD & EXTENDED | | |
|---|---|---|
| 9100-0000 | Standard 1 Year Warranty. | 1 |
| 9100-0003 | Lifetime Frame Warranty. | 1 |
| 9100-0004 | 10 Year/100,000 Mile Structural Warranty for Alum Cab / Body - Statement of Warranty. | 1 |
| 9100-0005 | 10 Year Stainless Steel Plumbing Warranty - Statement of Warranty. | 1 |
| 9100-0019 | 10 Year Limited Paint and Perforation Warranty - For Sikkens Paint. | 1 |
| 9100-0090 | 25 Year frame rail corrosion warranty. Includes liners (if equipped). | 1 |

| SUPPORT, DELIVERY, INSPECTIONS AND MANUALS | | |
|---|---|---|
| 9300-0009 | Manuals, Operator and Service CD-ROM. | 1 |
| 9300-0016 | Approval Drawings-Standard. | 1 |
| 9300-0316 | Fire Apparatus Safety Guide published by FAMA, latest edition. | 1 |

PRICE - 2017 E-ONE HS EMAX PUMPER - CYCLONE CHASSIS $485,162

# STATE OF OHIO TERM SCHEDULE

## 4200 SURFACE RD
## COLUMBUS, OH 43228

*Quote No: 77025*

8/27/2016

Quote Rev:12 Drawing Rev:9

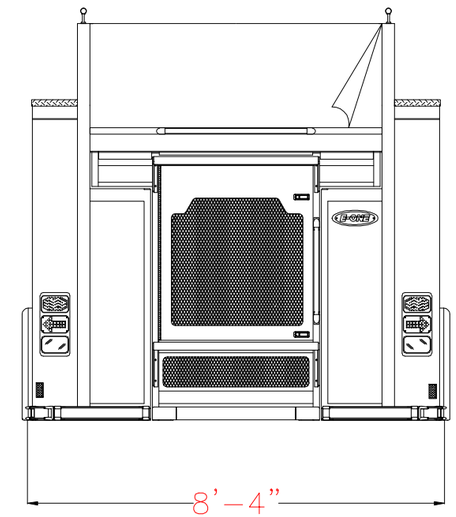


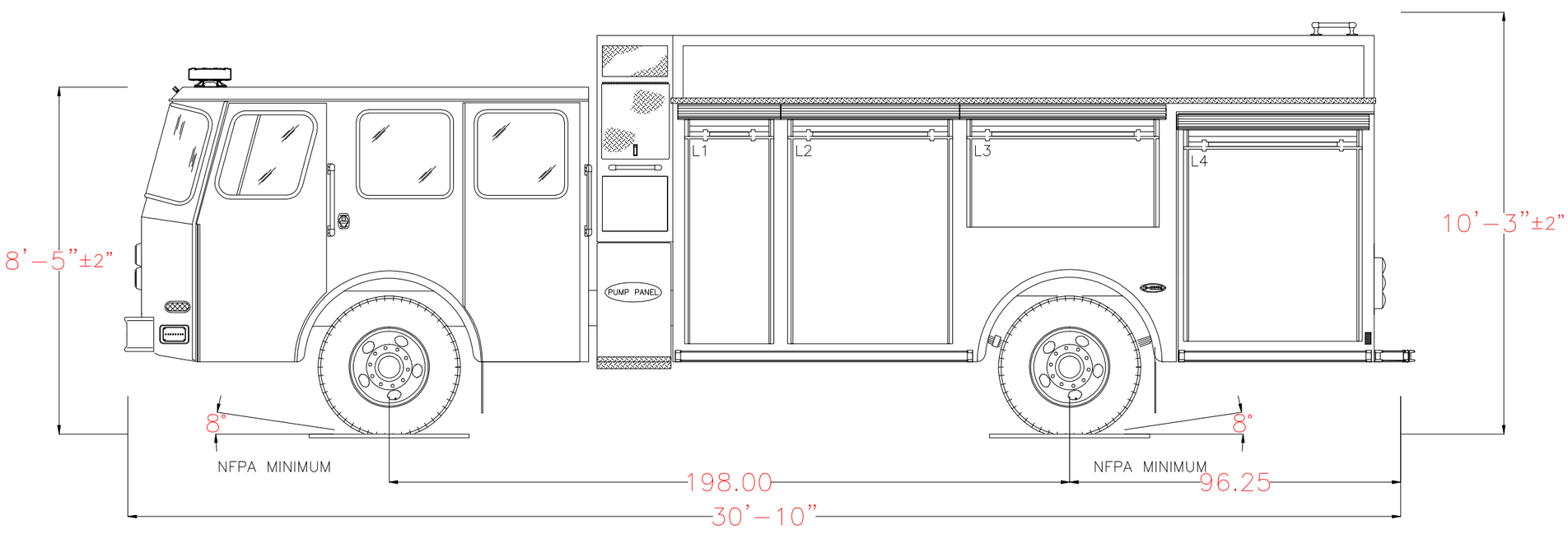


POWERED BY EZDRAW

Notice: This drawing provides a GENERAL REPRESENTATION of the vehicle configuration and should be used for evaluation purposes. The respective dimensions shown,including overall height and length, are estimates and may vary due to manufacturing processes. All other items such as lighting and fixtures, plumbing, compartmentation, and other generally assembled details are shown for REFERENCE ONLY and may not be a direct reflection of the final truck configuration. In ALL situations where this drawing may conflict with the specifications, THE SPECIFICATIONS, AS REFLECTED IN THE APPROVED SHOP ORDER, SHALL PREVAIL. Unless otherwise specified, the proposed apparatus will be manufactured to the latest NFPA recommendations as well as other applicable federally regulated safety regulations. E-One reserves the right to engineer and incorporate design improvements and changes without notice, while adhering to the intent of the specification.

| 1500 GPM PUMP<br>0 TOTAL VOLUME<br>0 TOTAL FOAM | HOSE LOADS : |
|---|---|
| | |
| | |
| | |
| | |

| | OPENING | | INTERIOR DIMENSIONS | | | | |
|---|---|---|---|---|---|---|---|
| COMPT. | WIDTH | HEIGHT | WIDTH | LOWER HEIGHT | LOWER DEPTH | UPPER HEIGHT | UPPER DEPTH |
| L1 | 24 | 59.75 | 26 | N/A | N/A | N/A | N/A |
| L2 | 46 | 59.75 | 48 | N/A | N/A | N/A | N/A |
| L3 | 54 | 25.75 | 56 | N/A | N/A | N/A | N/A |
| L4 | 50 | 56 | 52 | N/A | N/A | N/A | N/A |
| R1 | 24 | 59.75 | 26 | N/A | N/A | N/A | N/A |
| R2 | 48 | 59.75 | 50 | N/A | N/A | N/A | N/A |
| R3 | 54 | 25.75 | 56 | N/A | N/A | N/A | N/A |
| R4 | 50 | 56 | 52 | N/A | N/A | N/A | N/A |

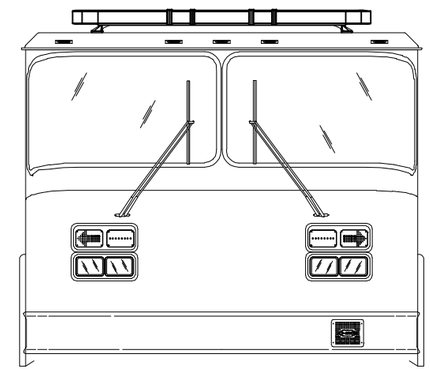

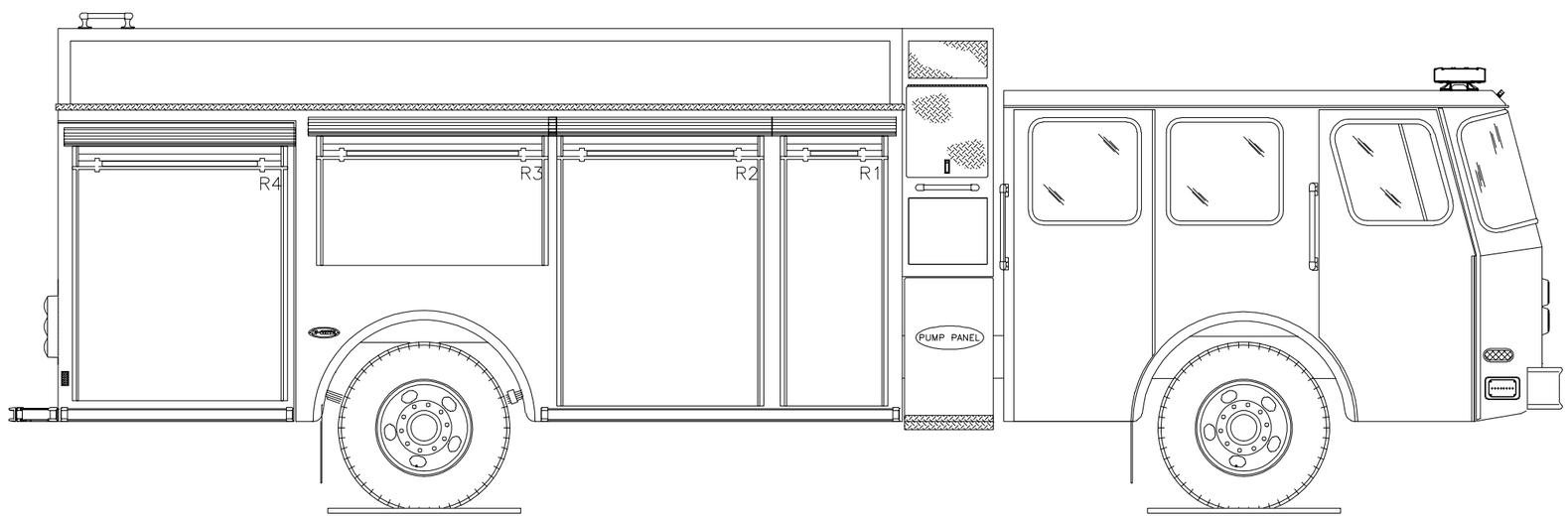


POWERED BY EZDRAW

# E-ONE OHIO STATE TERM SCHEDULE 2017 OPTIONS PRICE BOOK
## PUMPERS - CUSTOM CHASSIS

| Item No. | Description | |
|---|---|---|
| **CUSTOM CHASSIS** | | |
| 1020-0036 | Gates Green Stripe hose IPOS (silicone hose) shall be used for all heater applications within the cab. | $122 |
| 1025-0004 | Meritor FL941 front axle 18000 lb. with assist cylinder. | $13,630 |
| 1025-0005 | Meritor FL-941 front axle 18700 lb. | $17,911 |
| 1025-0006 | Meritor FL941 front axle 20000 lbs. | $18,559 |
| 1025-0007 | Meritor FL941 front axle 21000lb | $18,559 |
| 1025-0008 | Meritor FL941 front axle 21500lb | $18,817 |
| 1025-0009 | Meritor FL943 front axle 18000 lbs. | $14,537 |
| 1025-0010 | Meritor FL-943 front axle 18700 lb. | $18,817 |
| 1025-0011 | Meritor FL-943 front axle 20000 lb. | $19,597 |
| 1025-0012 | Meritor FL-943 front axle 21000 lb. | $19,855 |
| 1025-0013 | Meritor FL-943 front axle 21500 lbs. | $20,245 |
| 1025-0014 | Meritor front drive axle and suspension 16540# | $13,237 |
| 1025-0015 | Meritor front drive axle and suspension 18000# | $39,506 |
| 1025-0016 | Meritor RS-24-160 single rear axle 24000 lb. capacity. | $11,943 |
| 1025-0017 | Meritor RS-25-160 single rear axle 27000 lb. capacity. | $13,368 |
| 1025-0018 | Meritor RS-30-185 single rear axle 31000 lb. capacity. | $14,926 |
| 1025-0019 | Meritor RT-40-145 rear tandem axle 40000 lb. capacity. | $27,250 |
| 1025-0020 | Meritor RT-46-160 rear tandem axle 46000 lb. capacity. | $31,792 |
| 1025-0021 | Meritor RT-46-160 rear tandem axle 48000 lb. capacity. | $31,792 |
| 1025-0023 | Meritor RT-50-160 rear tandem axle 54000 lb. capacity. | $40,226 |
| 1025-0027 | Driver controlled rear differential. | $852 |
| 1025-0028 | Koni shock absorbers for front axle - adjustable. | $371 |
| 1025-0029 | Front shock absorbers. | $200 |
| 1025-0030 | Stemco oil seal front axle. Chicago Rawhide seal with Stemco sight glass will be supplied when front disc brakes are selected. | $121 |
| 1025-0031 | Spiral pins front suspension. | $1,850 |
| 1025-0034 | Automatic traction control. In addition to standard ABS system. | $639 |
| 1025-0035 | Koni shock absorbers for rear axle. | $588 |
| 1025-0036 | Automatic Traction Control System 6x4/6x6 | $2,179 |
| 1025-0058 | Stemco oil seal rear axle (per axle). Not available with disc brakes. | $256 |
| 1025-0059 | Meritor front drive axle and suspension 21000# | $39,750 |
| 1025-0060 | Meritor FL-943 front axle 22100 lb. | $21,005 |
| 1025-0078 | S-Cam brakes to have Haldex brand slack adjusters (per axle). | $339 |
| 1025-0079 | Meritor RS-23-240 two speed single rear axle 24000lb capacity. | $16,807 |
| 1025-0086 | Meritor FL941 front axle 18500lb. | $17,911 |
| 1025-0088 | Synthetic 75w90 gear oil for rear axle. | $406 |
| 1025-0089 | Meritor RS-26-185 single rear axle 27000lb capacity | $14,926 |
| 1025-0095 | Meritor RS-30-185 single rear axle 29000lb capacity | $14,926 |
| 1025-0097 | Meritor RS-30-185 single rear axle 33000 lb. capacity. Requires 16.5" x 8.625" cast shoe brakes and 33K suspension. | $14,926 |
| 1025-0107 | Synthetic 75w90 gear oil for front axle. | $126 |
| 1025-0108 | Meritor RS-30-185 single rear axle 30000lb capacity | $14,926 |
| 1025-0114 | Meritor FL943 front axle 18700lb with multi-leaf front springs. | $19,260 |
| 1025-0120 | Driver controlled rear differential. Includes guarded toggle switch located on driver side diagnostic panel. | $852 |
| 1025-0124 | Meritor FL943 front axle 20000 lb. Springs to have Berlin style eyes with rubber bushings. | $19,929 |
| 1025-0125 | Meritor FL943 front axle 19840 lb. | $18,817 |
| 1025-0127 | Meritor FL941 front axle 18000 lb with multi-leaf front springs. | $12,375 |
| 1025-0132 | Koni shock absorbers for front axle - non-adjustable. For use with IFS front axle only. | $371 |
| 1025-0133 | Meritor FL943 front axle 20000 lb with multi-leaf front springs. | $20,029 |
| 1025-0134 | Meritor MT-40-14X rear tandem axle 40000 lb. capacity. | $27,250 |
| 1025-0135 | AxleTech FS25 front axle 18700 lb. Includes sight guage. | $19,924 |
| 1025-0137 | Meritor FL943 front axle 19220 lb. | $18,817 |
| 1025-0138 | AxleTech FS25 front axle 20000 lb. Includes sight guage. | $19,924 |
| 1025-0140 | Spicer 232S4 single rear axle 24000 lb. capacity with power divider (232D4 with DCDL). Includes drivelines to front axle. | $17,884 |
| 1025-0141 | Spicer 301S4 single rear axle 31000 lb. capacity with power divider. Includes drivelines to front axle. | $22,571 |
| 1025-0142 | Chicago oil seal front axle. Chicago Rawhide seal with Chicago Rawhide sight glass (model 1743) will be supplied when front disc brakes are selected. | $121 |

| Item No. | Description | |
|---|---|---|
| 1025-0144 | The front axle shall be fitted with a 1" spacer block per customer request. The spacer block shall not compromise step height requirements or impose unacceptable rake characteristics when added. Chassis engineering approval required. | $220 |
| 1025-0146 | Reyco Granning independent front suspension - 18000 lb. Includes shocks and sight glass on hubs. | $31,931 |
| 1025-0147 | Reyco Granning independent front suspension - 18700 lb. Includes shocks and sight glass on hubs. | $31,931 |
| 1025-0148 | Reyco Granning independent front suspension - 19840 lb. Includes shocks and sight glass on hubs. | $31,931 |
| 1025-0149 | Reyco Granning independent front suspension - 20000 lb. Includes shocks and sight glass on hubs. | $31,931 |
| 1025-0150 | Reyco Granning independent front suspension - 21000 lb. Includes shocks and sight glass on hubs. | $31,931 |
| 1025-0151 | Reyco Granning independent front suspension - 21500 lb. Includes shocks and sight glass on hubs. | $31,931 |
| 1025-0152 | Reyco Granning independent front suspension - 22800 lb. Includes shocks and sight glass on hubs. | $31,931 |
| 1025-0153 | Reyco Granning independent front suspension - 24000 lb. Includes shocks and sight glass on hubs. | $31,931 |
| 1025-0156 | Bilstein nitrogen shock absorbers for front axle. | $555 |
| 1025-0157 | Bilstein nitrogen shock absorbers for tandem rear axle. | $1,763 |
| 1025-0158 | Stemco sight glass guards. | $104 |
| 1025-0159 | Meritor front drive axle and suspension 19840# | $39,750 |
| 1025-0161 | Upgrade rear axle for Freightliner commercial chassis to 26000 lb. rating. Includes 16 ply 12R22.5 tires. | $3,029 |
| 1025-0162 | Upgrade rear axle for International commercial chassis to 26000 lb. rating. Includes Goodyear (or equal) 12R22.6 G622 16 ply tires. | $933 |
| 1025-0163 | Rear axle high water ventilation tube. | $236 |
| 1025-0164 | Meritor MFS18 front axle rated at 16000 lb. | $11,771 |
| 1025-0165 | Meritor FL-943 front axle 22500 lb. | $20,961 |
| 1025-0169 | Dana Spicer single rear axle with 27000 lb capacity with power divider. Includes drivelines to front axle. | $22,571 |
| 1025-0170 | Meritor MFS18 front axle rated at 18000 lb. | $11,771 |
| 1025-0172 | Meritor front drive axle and suspension 22800# | $45,608 |
| 1025-0174 | Meritor FL941 front axle 18000 lb. | $11,943 |
| 1025-0175 | Meritor RS-25-160 single rear axle at 24000 lb. rated capacity. | $13,368 |
| 1025-0178 | Meritor FL941 front axle 21200lb | $18,559 |
| 1025-0181 | Dana S35-590 single rear axle 33000lb capacity. Requires Bendix rear brakes. | $18,989 |
| 1025-0184 | Marmon-Herrington MT-22 front drive axle and suspension 19840 lb. | $40,687 |
| 1050-0000 | Steel wheels for front axle (2). | $350 |
| 1050-0001 | Alcoa aluminum wheels for front axle (2). | $1,888 |
| 1050-0002 | Steel wheels for rear axle (4). | $694 |
| 1050-0003 | Alcoa aluminum wheels for rear axle (4). | $3,770 |
| 1050-0004 | Steel wheels for rear axles (8). | $1,384 |
| 1050-0005 | Alcoa aluminum wheels for rear axles (8). | $7,535 |
| 1050-0007 | Front axle wheel trim kit. Includes stainless steel lug nut covers (chrome plated plastic if applicable) and center cap with E-ONE logo. Note: Center cap will have an inspection port IPO a logo if equipped with Stemco oil seals. | $253 |
| 1050-0008 | Rear axle (single) wheel trim kit. Includes stainless steel lug nut covers (chrome plated plastic if applicable) and center cap with E-ONE logo. E-ONE custom chassis w/steel wheels will have chrome plated plastic lug covers. | $312 |
| 1050-0009 | Rear axle (tandem) wheel trim kit. Includes stainless steel lug nut covers (chrome plated plastic if applicable) and center caps with E-ONE logo. E-ONE custom chassis w/steel wheels will have chrome plated plastic lug covers. | $694 |
| 1050-0017 | Each inside wheel of the single rear axle shall have valve stem extensions. | $128 |
| 1050-0018 | Each inside wheel of the tandem rear axles shall have valve stem extensions. | $252 |
| 1050-0019 | Two steel wheels painted job color on both the inside and outside facing for front axle. | $673 |
| 1050-0026 | Front axle Wheel Trim kit. Includes stainless steel lug nut covers and center cap (no logo). Note: Center cap will have an inspection port if equipped with Stemco oil seals. | $253 |
| 1050-0027 | Rear axle (single) wheel trim kit. Includes stainless steel lug nut covers (chrome plated plastic if applicable) and center caps (no logo). E-ONE custom chassis w/ steel wheels will have chrome plated plastic lug covers. | $312 |
| 1050-0028 | Rear axle (tandem) Wheel Trim kit. Includes stainless steel lug nut covers (chrome plated plastic if applicable) and center cap (No logo). E-ONE custom chassis w/ steel wheels will have chrome plated plastic lug covers. | $694 |
| 1050-0029 | Front & rear axle wheel simulator kit. Includes stainless steel wheel simulator and center cap with E-ONE logo. | $1,830 |
| 1050-0030 | Rear axle (single) wheel trim kit. Includes stainless steel lug nut covers and center caps (no logo). E-ONE custom chassis w/ steel wheels will have chrome plated plastic lug covers. | $312 |
| 1050-0031 | Front axle wheel simulator kit. Includes stainless steel wheel simulator and center cap with E-ONE logo. Note: Center cap will have an inspection port IPO a logo if equipped with Stemco oil seals. | $608 |
| 1050-0032 | Rear axle (single) wheel simulator kit. Includes full stainless steel wheel simulators with integrated lug nut covers and E-ONE logo. | $886 |

| Item No. | Description | |
|---|---|---|
| 1050-0033 | Dura-Brite finish on aluminum wheel (EA). Not available on 13" wheel (425 and 445 tires). | $115 |
| 1050-0039 | Polish inner and outer aluminum wheel (EA). | $94 |
| 1050-0043 | Rear axle (tandem) wheel simulator kit. Includes full stainless steel wheel simulators with integrated lug nut covers and E-ONE logo. | $1,769 |
| 1050-0044 | Accuride aluminum wheels for front axle (2). | $1,834 |
| 1050-0045 | Accuride aluminum wheels for rear axle (4). | $3,659 |
| 1050-0046 | Accuride aluminum wheels for rear axles (8). | $7,313 |
| 1050-0047 | Front axle wheel trim kit. Includes stainless steel "Cover-Up" covers with E-ONE logo. Not available with Stemco oil seals. | $325 |
| 1050-0048 | Rear axle (single) Wheel Trim kit. Includes stainless steel "Cover-Up" covers with E-ONE logo. Not available with Stemco oil seals. | $418 |
| 1050-0049 | Rear axle (tandem) Wheel Trim kit. Includes stainless steel "Cover-Up" covers with E-ONE logo. | $833 |
| 1050-0054 | Crossfire dual wheel air tire equalizing system. | $333 |
| 1050-0068 | Each outboard facing wheel of the single axle unit shall have valve stem extensions; front 2" rear appropiately sized. Includes additional set (inside and outside) ship loose. | $250 |
| 1050-0069 | Isolators between wheels and/or hubs. | $219 |
| 1050-0070 | Accuride aluminum wheels outer and steel inner for rear axles (4). | $2,177 |
| 1050-0071 | Wheel check loose lug nut indicators (standard temperature lime green) for 4x2/4x4 chassis. Front and rear wheels. | $151 |
| 1050-0073 | Wheel trim package. For use with steel or aluminum wheels. | $472 |
| 1050-0076 | Accu-Shield finish on aluminum wheel (EA). Not available on 13" wheel (425 and 445 tires). | $118 |
| 1050-0078 | Front axle wheel trim. Includes center cap with E-ONE logo only; NO lug nut covers. Note: Center cap will have an inspection port IPO a logo if equipped with Stemco oil seals. | $234 |
| 1050-0079 | Rear axle (single) wheel trim. Includes center cap with E-ONE logo only; NO lug nut covers. | $292 |
| 1050-0080 | Trim Kit Lug nut covers for front and rear axle wheels. Includes lug nut covers only (chrome plated plastic if applicable) | $195 |
| 1050-0081 | Rear wheels to be 9 inches wide quantity (4). | $475 |
| 1050-0082 | Alcoa aluminum wheels outer and steel inner for rear axles (8). | $4,464 |
| 1050-0083 | Alcoa aluminum wheels outer and steel inner for rear axles (4). | $2,232 |
| 1060-0001 | Two Michelin 315 tires model XZA-1 for front axle. | $1,861 |
| 1060-0004 | Four Michelin 11R tires model XZE2 highway tread for rear axle. | $3,199 |
| 1060-0005 | Four Michelin 12R tires model XZE highway tread for rear axle. | $3,741 |
| 1060-0006 | Four Michelin 315 tires model XZA-1 for rear axle | $3,721 |
| 1060-0007 | Eight Michelin 11R tires model XZE2 for rear axles. | $6,393 |
| 1060-0008 | Eight Michelin 12R tires model XZE for rear axles | $7,480 |
| 1060-0010 | Two Goodyear 315 tires model G291 for front axle. | $1,861 |
| 1060-0015 | Four Michelin 11R rear tires with XDN2 mud and snow tread. | $3,590 |
| 1060-0016 | Four Michelin 12R rear tires with XDN2 mud and snow tread. | $4,092 |
| 1060-0017 | Four Michelin 315 rear tires with XDN2 mud and snow tread. | $4,485 |
| 1060-0020 | Four Goodyear 315 rear tires with mud and snow tread. Intermittent fire service rating if GAWR is over 29560. | $3,898 |
| 1060-0021 | Eight Michelin 11R rear tires with XDN2 mud and snow tread. | $7,182 |
| 1060-0022 | Eight Michelin 12R rear tires with XDN2 mud and snow tread. | $8,182 |
| 1060-0023 | Eight Michelin 315 rear tires with Mud and Snow tread | $8,968 |
| 1060-0030 | Four Goodyear 315 rear tires with G291 highway tread. | $3,721 |
| 1060-0037 | Spare tire Michelin 24R21 each. | $3,300 |
| 1060-0042 | Two Michelin 365 tires model XZA for front axle. Speed rating for up to 75 mph. Requires Alcoa alum wheels. | $1,902 |
| 1060-0043 | Two Michelin 425 tires model XZY3 for front axle. | $2,302 |
| 1060-0044 | Two Michelin 445 tires model XZY3 for front axle. | $2,227 |
| 1060-0045 | Two Michelin 445 tires model XFE for front axle. | $2,564 |
| 1060-0046 | Two Michelin 425 tires model XFE for front axle. | $2,389 |
| 1060-0047 | Two Michelin 385 tires model XFE for front axle. | $2,205 |
| 1060-0049 | Tyron tire pressure monitoring system model TPMS. Includes wireless remote display in cab. | $1,201 |
| 1060-0050 | Tire pressure monitoring valve stem caps. | $176 |
| 1060-0051 | Two Michelin 385 tires model XZY3 for front axle. | $2,169 |
| 1060-0053 | PressurePro tire pressure monitoring system for single rear axle units. Includes bail mounted display in cab. | $1,021 |
| 1060-0054 | PressurePro tire pressure monitoring system for tandem rear axle units. Includes bail mounted display in cab. | $1,222 |
| 1060-0060 | Two Michelin 315 tires model XZY3 for front axle. | $2,000 |
| 1060-0061 | Four Michelin 12R rear tires with Mud and Snow XDS tread | $3,379 |
| 1060-0072 | Two Goodyear 385 tires for front axle with G296 MSA highway tread. | $2,133 |
| 1060-0073 | Two Goodyear 425 tires for front axle. | $2,076 |
| 1060-0075 | Four Goodyear 11R rear tires with G622 RSD mud and snow tread. | $3,949 |

| Item No. | Description | |
|---|---|---|
| 1060-0076 | Four Goodyear 12R rear tires with mud and snow tread. | $4,500 |
| 1060-0077 | Eight Goodyear 11R rear tires with G622 RSD Mud and Snow tread. | $7,900 |
| 1060-0078 | Eight Goodyear 12R rear tires with Mud and Snow tread | $9,001 |
| 1060-0079 | Four Goodyear 11R rear tires with highway tread | $2,859 |
| 1060-0081 | PressurePro tire pressure monitoring system for single rear axle units. Includes electrical system integrated display in cab. | $1,021 |
| 1060-0085 | Eight Michelin 12R rear tires with Mud and Snow XDS tread | $6,751 |
| 1060-0086 | Four Goodyear 11R rear tires with G287 MSA highway tread | $2,859 |
| 1060-0087 | Two Goodyear 315 tires with G287 MSA tread for front axle | $1,794 |
| 1060-0094 | Cat's Eye model 6120-AB00 single rear axle tire pressure monitoring system. For use on 120 PSI tires. Includes braided lines. | $854 |
| 1060-0096 | Tire balancing (EA). Location: front tires. | $69 |
| 1060-0098 | Two Bridgestone 315 tires model M860 for front axle. | $2,619 |
| 1060-0099 | Four Bridgestone 12R tires model R250F highway tread for rear axle. | $4,279 |
| 1060-0103 | Cat's Eye model 6130-AB00 single rear axle tire pressure monitoring system. For use on 130 PSI tires. Includes braided lines. | $854 |
| 1060-0104 | Four Goodyear 12R rear tires with G661 HSA highway tread. | $2,911 |
| 1060-0106 | Four Goodyear 11R rear tires with G661 HSA highway tread. | $2,704 |
| 1060-0111 | Four Goodyear 315 rear tires with G289 WHA tread. | $4,067 |
| 1060-0112 | Tire pressure monitoring valve stem caps. Real Wheels LED indicators. | $234 |
| 1060-0114 | Tire pressure monitoring valve stem caps. VECSAFE LED indicators. | $234 |
| 1060-0117 | RWC AirGuard LED tire pressure monitoring valve stem caps (6) for single rear axle applications. | $180 |
| 1060-0119 | RWC AirGuard LED tire pressure monitoring valve stem caps (10) for tandem rear axle applications. | $287 |
| 1060-0120 | Two Goodyear 315 front tires with G289 WHA tread. | $2,034 |
| 1060-0121 | Four Goodyear 11R rear tires with RHD-II G137 tread. | $3,535 |
| 1060-0123 | RWC AirGuard LED tire pressure monitoring valve stem caps (2) front only. For use with rear axle Crossfire equalization systems. | $73 |
| 1060-0124 | Four Michelin 11R rear tires with XDS2 mud and snow tread. | $3,590 |
| 1060-0127 | Four Goodyear 11R rear tires with G751 MSA highway tread | $2,859 |
| 1060-0128 | Tire pressure monitoring integrated with V-MUX multiplex electrical system. Includes wheel mounted sensors. Requires Vista display. For use with single rear axle units. | $1,283 |
| 1060-0129 | Tire pressure monitoring integrated with V-MUX multiplex electrical system. Includes wheel mounted sensors. Requires Vista display. For use with tandem rear axle units. | $1,753 |
| 1060-0130 | Four Michelin 12R rear tires with XZY3 tread. | $4,704 |
| 1060-0131 | Two Michelin 425 tires model XZL for front axle. | $2,302 |
| 1060-0132 | Four Goodyear 12R rear tires with G751 MSA highway tread. | $3,379 |
| 1060-0134 | Four Michelin 315 rear tires with XZY3 tread. | $4,485 |
| 1070-0001 | Rear suspension springs rated equal to the capacity of the axle. | $1,431 |
| 1070-0003 | Rear suspension air ride rated equal to the capacity of the axle. | $5,815 |
| 1070-0004 | Rear suspension air ride (40-46K) rated equal to the capacity of the axles. | $10,135 |
| 1070-0005 | Air ride cab. | $2,990 |
| 1070-0007 | Shock absorbers rear single axle. Not available on 31000 lb. | $200 |
| 1070-0012 | Reyco rear suspension springs rated equal to the capacity of the axle. | $1,431 |
| 1070-0013 | Rear suspension air ride (48-54K) rated equal to the capacity of the axles. | $11,873 |
| 1070-0017 | Reyco rear spring suspension w/aux 33K rating. | $2,148 |
| 1070-0019 | Rear suspension springs rated at 27000 lbs. | $1,669 |
| 1070-0020 | Rear axle u-bolts .875". 24K/27K rear axles only. Not available with air ride suspensions. | $112 |
| 1070-0024 | Lower leaf wrap. Single rear axle only. | $572 |
| 1070-0027 | Rear suspension FIREMAAX EX model FMX-272 27000 lb. single axle air ride. | $6,248 |
| 1070-0028 | Rear suspension FIREMAAX EX model FMX-242 24000 lb. single axle air ride. | $5,772 |
| 1070-0029 | Rear suspension FIREMAAX EX model FMX-312 31000 lb. single axle air ride. Requires aluminum wheels. | $8,183 |
| 1070-0031 | Front axle u-bolts .875". Not available with independent suspensions. | $112 |
| 1070-0032 | Rear suspension Link Atlas 33000 - 35000 lb. single axle air ride. Requires aluminum wheels. Not compatible with tire chains. | $9,309 |
| 1100-0000 | 16-1/2'' x 6'' S-cam brakes with ArvinMeritor automatic slack adjusters for front axle. | $327 |
| 1100-0001 | Meritor EX225H 17" disc brakes for front axle. | $1,278 |
| 1100-0002 | ArvinMeritor 16-1/2'' x 7'' S-cam brakes with cast brake drums for a single rear axle. | $327 |
| 1100-0003 | Meritor EX225H 17" disc brakes for rear axle maximum capacity 27000 lbs. | $1,278 |
| 1100-0004 | Meritor EX225H 17" disc brakes for rear axles maximum capacity 54000 lbs. | $1,952 |
| 1100-0005 | Brake system air 4X2/4X4. | $8,634 |
| 1100-0007 | Parking brake release mounted center of the engine cover. | $333 |
| 1100-0008 | Brake system air 6X4. | $8,945 |
| 1100-0009 | Front axle parking brake. | $547 |
| 1100-0010 | Brake emergency release for spring. | $995 |

| Item No. | Description | |
|---|---|---|
| 1100-0011 | Roll Stability Control Includes ATC. Not available on commercial chassis tiller or tandem axle custom chassis. | $2,067 |
| 1100-0014 | ArvinMeritor 16-1/2'' x 7'' S-cam brakes with cast brake drums for a tandem rear axle. | $395 |
| 1100-0018 | Dust Shields. Front and Rear Axle. CAM Brakes only. | $381 |
| 1100-0019 | Dust Shields. Rear Axle. CAM Brakes only. | $232 |
| 1100-0020 | Compression fittings for all air brake system lines. Includes cab interior air lines as applicable. | $1,279 |
| 1100-0023 | Stainless steel park brake release guard. | $223 |
| 1100-0024 | G4 Electronic Stability Control (4x2) Includes RSC and ATC. Not available on 4x4 commercial chassis or tiller. | $3,636 |
| 1100-0025 | ArvinMeritor 16-1/2'' x 8.625'' Q-Plus S-cam brakes with cast brake drums for a single rear axle. 24K axle only. | $1,346 |
| 1100-0026 | G4 Electronic Stability Control (6x4) Includes RSC and ATC. Not available on 6x6 or commercial chassis. | $4,334 |
| 1100-0027 | Knorr-Bremse 17" disc brakes for front axle. Timoney IFS only. | $1,278 |
| 1100-0030 | Brake chambers 30-36 for 24000# single rear axle. N/A with disc brakes. | $568 |
| 1100-0032 | Hinged stainless steel park brake release guard. | $297 |
| 1100-0035 | Glad Hands tow option. Location: Front chassis frame. | $558 |
| 1100-0036 | 16.5'' x 8.625'' P-Cast S-cam brakes for 27000 - 33000 Meritor axle. | $838 |
| 1100-0037 | Glad Hands tow option. Location: rear chassis frame. | $558 |
| 1100-0040 | Gauge air brake application additional. Location: officer side overhead console. | $318 |
| 1100-0043 | Emergency park brake activation valve mounted on the officer's side dash with stainless steel guard. | $691 |
| 1100-0045 | 2nd parking brake release mounted on the officer's side electrical access cover (side facing) with stainless steel guard. Severe duty interior only. | $929 |
| 1100-0047 | Navistar ESP (ESC) Stability control system 4 x 2 | $1,690 |
| 1100-0049 | Parking brake release mounted on center dash (not available with ABS dash). | $324 |
| 1100-0052 | G4 Electronic Stability Control with Wabco OnGuard CMS system (4x2). Includes RSC and ATC. Not available on 4x4 commercial chassis or tiller. | $7,698 |
| 1100-0053 | G4 Electronic Stability Control with Wabco OnGuard CMS system (6x4). Includes RSC and ATC. Not available on 4x4 commercial chassis or tiller. | $8,397 |
| 1100-0054 | Bendix SN7 17" disc brakes for front axle. Reyco Granning IFS only. | $1,278 |
| 1100-0055 | Spring guards on each end of brake lines from wheel to frame. | $175 |
| 1100-0057 | Brake chambers to be type 24 front and 30/30 rear. MGM piston style long stroke. | $669 |
| 1100-0058 | Safety Check brake stroke indicators. | $739 |
| 1100-0059 | Stainless steel u-bolt design park brake release guard. | $223 |
| 1100-0061 | Glad Hands tow option. Location: Front chassis frame below gravel shield driver side. | $558 |
| 1100-0063 | ArvinMeritor 16-1/2'' x 8.625'' Q-Plus S-cam brakes with cast brake drums for a 48K tandem rear axle. | $2,690 |
| 1100-0064 | Glad Hands tow option. Location: Front chassis frame below gravel shield officer side. | $558 |
| 1100-0065 | Brake chambers 36-36 for 27000# single rear axle. N/A with disc brakes. Option limited to 20000 front GAWR. | $568 |
| 1100-0066 | Emergency park brake activation valve mounted on the officer's side upper tier with stainless steel guard. | $691 |
| 1100-0067 | 16-1/2'' x 7'' S-cam brakes with automatic slack adjusters for Marmon-Herrington front drive axle. | $327 |
| 1110-0000 | Inlet for air system. Location: [#LOC]. | $388 |
| 1110-0001 | Air inlet auto eject. Includes weatherproof gasketed cover. [#LOC]. | $499 |
| 1110-0002 | Air dryer Bendix AD-9. | $505 |
| 1110-0003 | Air dryer System Saver 1200. | $608 |
| 1110-0004 | Air tank drains w/pull cords. | $443 |
| 1110-0005 | Automatic moisture ejectors heated. | $440 |
| 1110-0007 | Air lines braided. | $2,354 |
| 1110-0008 | Gauge air brake application mounted in cab | $318 |
| 1110-0010 | Air inlet. To charge brake system. Commercial chassis only. Location: [#LOC]. | $388 |
| 1110-0011 | Air intake restriction gauge. | $271 |
| 1110-0012 | Air outlet off front ACC tank. It shall be located [#LOC]. | $388 |
| 1110-0013 | Air horns shut-off valve. Located in cab accessible by driver. | $114 |
| 1110-0025 | Thomas 110 volt air compressor plumbed to air brake system. | $1,212 |
| 1110-0026 | Air horns recessed in bumper (PR). | $860 |
| 1110-0027 | Isolated air tank. Includes pressure protection valve. | $585 |
| 1110-0040 | Dump valve system for rear air ride suspension. Includes three valves one on each bag and one on supply line. Switch from driver's side overhead console. | $668 |
| 1110-0041 | Air horns Grover recessed in bumper (PR). | $1,047 |
| 1110-0042 | Label on isolated air tank "Air Horns Only". | $35 |
| 1110-0044 | Air inlet Auto-Eject. Includes [#COL] weatherproof gasketed cover. Location: [#LOC]. | $499 |
| 1110-0045 | Gast air compressor 110v model 3HBB-32-M300AX. | $1,120 |

| Item No. | Description | |
|---|---|---|
| 1110-0046 | Kussmaul 12V Auto Drain. For use with Kussmaul air compressor. | $486 |
| 1110-0048 | Air inlet below bumper driver side. Fitting to be a Hansen male model B40 with protective plastic cover. Includes matching female model 4000 fitting (ship loose). | $499 |
| 1110-0049 | Air Lines Wrapped in Thermal Loom | $1,906 |
| 1110-0050 | Air brake lines to have 4 to 6'' slack for future service work. | $117 |
| 1110-0052 | Air horns recessed behind bumper (PR). Includes E-ONE grilles on bumper. | $1,082 |
| 1110-0053 | Air horns Grover recessed in front bumper. (1) air horn 21" long (1) air horn 24.5" long | $1,096 |
| 1110-0054 | Relocate air dryer to opposite the exhaust system inside the frame rails. | $280 |
| 1110-0055 | Air horns will alternate from driver to officer. | $417 |
| 1110-0056 | Air dryer Bendix ADIP. | $649 |
| 1110-0058 | Air horns recessed in bumper (PR) with bells behind bumper. | $921 |
| 1110-0066 | Air horns Grover recessed in front bumper. (1) air horn 21" long (1) air horn 24.5" long. | $1,285 |
| 1110-0077 | Recessed air outlet off isolated tank. Location: [#LOC]. | $388 |
| 1110-0082 | Air horns Grover model 2040 rectangular recessed in bumper (PR) with snow caps. | $1,116 |
| 1110-0090 | Air horns Grover recessed in bumper (PR) with snow caps. | $1,181 |
| 1110-0095 | Automatic moisture ejector heated. Wet tank only. | $189 |
| 1110-0097 | Automatic moisture ejector non-heated (EA). | $145 |
| 1110-0102 | Thomas 220 volt air compressor plumbed to air brake system. | $1,212 |
| 1110-0105 | Gast air compressor 120V/240V model 4HCC-10-M450X. | $1,301 |
| 1110-0106 | Air horns Grover recessed behind bumper (PR). Includes E-ONE grilles on bumper. | $1,270 |
| 1110-0109 | Air hose routed from the compressor to the dryer shall be upgraded to include stainless steel mesh for the full length of hose. | $82 |
| 1110-0111 | Gast air compressor 110v model 1HAB-10-M100X. | $1,029 |
| 1110-0112 | Martin-Horn No. 2297 GM. Includes set of (4) horns air compressor and snow caps for horns. Locate horns and compressor in cab. Horn compressor to be activated through switch in cab accessible to the driver. | $5,460 |
| 1110-0116 | Air horns Buell recessed in bumper (PR). | $1,092 |
| 1110-0117 | Air horns Grover model 2040 rectangular recessed in bumper (PR). | $1,116 |
| 1110-0118 | Inlet for air system. Includes weather proof box and Hubbel [#COL] cover. Location: [#LOC]. | $494 |
| 1110-0124 | Air horns Grover recessed behind bumper (PR). Includes grilles (No Logo) on bumper. | $1,270 |
| 1110-0125 | Gast air compressor 110v model 3HBB-32-M300AX with moisture filter. | $1,275 |
| 1110-0127 | Automatic moisture ejector heated. Air dryer only. | $189 |
| 1110-0128 | Gauge air for tank. Location: driver side overhead. | $409 |
| 1110-0129 | Diamond plate flip cover for air inlet or outlet with label mounted in driver's door jamb. | $120 |
| 1110-0131 | Compression fittings for fan clutch ipos. | $111 |
| 1110-0133 | Air dryer Haldex model N4253A. | $688 |
| 1110-0135 | Air horns shut-off valve. Located on driver side overhead console. | $114 |
| 1110-0136 | Air horns shut-off valve. Located on officer side overhead console. | $114 |
| 1110-0137 | Compression fittings for pump shift ipos. | $111 |
| 1110-0138 | Air horns Grover model 2040 rectangular behind bumper (PR). Includes E-ONE grilles. | $1,339 |
| 1110-0139 | Air dryer Bendix AD-SP. | $505 |
| 1110-0141 | Air inlet shut-off valve. Located adjacent to air inlet. | $114 |
| 1110-0143 | Diamond plate flip cover for air inlet or outlet with label mounted on officer's gravel shield. | $120 |
| 1110-0144 | Air outlet shut-off valve. Located adjacent to air outlet. | $114 |
| 1110-0145 | Switch. Foot switch siren break. Includes: 25 degree mounting bracket. See photo on file for mounting instructions. Locate (1) officer side for left foot. | $144 |
| 1110-0147 | Recessed air outlet off isolated tank. Location: driver and officer side rear wheel well offset rearward. | $388 |
| 1125-0000 | Retarder Telma focal mounted. All four stages applied with brake application. Not available on tandem axle or four jack aerials. | $10,514 |
| 1125-0001 | Brake Jacob's exhaust | $784 |
| 1125-0002 | Jacobs engine compression brake. | $1,821 |
| 1125-0003 | Allison transmission retarder. Pre-select feature will be switched off with this option. | $12,459 |
| 1125-0007 | Tag located at Jacob Brake Controller. To read: Do Not Operate on Wet or Slippery Surfaces. | $83 |
| 1125-0013 | Lever control for Telma retarder. 5 position lever with low speed cutout. | $305 |
| 1125-0014 | Dual retarder operation. Engine Jacobs brake and transmission retarders to both be operable at the same time. Requires special approval. Option contingent on receiving formal approval from driveline component suppliers. | $126 |
| 1125-0015 | Relocate Jake Brake control to driver side of electrical access cover. | $415 |
| 1125-0018 | Compression brake for MAXXFORCE engines. | $1,821 |
| 1125-0024 | Switch selector Jacobs compression brake / transmission retarder. Location and function: driver side overhead console to select compression brake or trans retarder. | $209 |
| 1125-0025 | Relocate Jacobs Brake control. Location: driver side of center dash upper tier. | $415 |
| 1150-0054 | Hinged diamond plate lid for driver side bumper tray. Includes 1/4 turn latch and gas shock hold open. | $282 |

| Item No. | Description | |
|---|---|---|
| 1150-0055 | Hinged diamond plate lid for center bumper tray. Includes 1/4 turn latch and gas shock hold open. | $311 |
| 1150-0056 | Hinged diamond plate lid for officer side bumper tray. Includes 1/4 turn latch and gas shock hold open. | $282 |
| 1150-0059 | Red vinyl lid with velcro fasteners for bumper tray driver side. | $185 |
| 1150-0060 | Red vinyl lid with velcro fasteners for bumper tray officer side. | $185 |
| 1150-0061 | Red vinyl lid with velcro fasteners for bumper tray center. | $185 |
| 1150-0062 | Black vinyl lid with velcro fasteners for bumper tray driver side. | $185 |
| 1150-0063 | Black vinyl lid with velcro fasteners for bumper tray officer side. | $185 |
| 1150-0064 | Black vinyl lid with velcro fasteners for bumper tray center. | $185 |
| 1150-0065 | Diamond plate lid for driver center and officer hose trays. 5.25" high with dual chrome grab handles rubber hood latches and gas shocks. | $608 |
| 1150-0085 | Nylon black strap on officer side front bumper tray (EA). | $81 |
| 1150-0086 | Nylon black strap on driver side front bumper tray (EA). | $81 |
| 1150-0087 | Nylon black strap on center front bumper tray (EA). | $81 |
| 1150-0094 | Hinged diamond plate lid for driver side bumper tray. Includes D-Ring latch and gas shock hold open. | $309 |
| 1150-0095 | Hinged diamond plate lid for center bumper tray. Includes D-Ring latch and gas shock hold open. | $338 |
| 1150-0096 | Hinged diamond plate for officer side bumper tray. Includes D-Ring latch and gas shock hold open. | $309 |
| 1150-0097 | Tray driver side bumper outboard for hydraulic/cord reel. | $708 |
| 1150-0098 | Tray officer side bumper outboard for hydraulic/cord reel. | $708 |
| 1150-0100 | Hinged floor of center bumper tray. Hinged to the rear. | $781 |
| 1150-0102 | Diamond plate lid for driver hosetray. 5.25" high with chrome grab handle rubber hood latch gas shock and water stop angle. | $400 |
| 1150-0103 | Diamond plate lid for center hose tray 5.25" high with chrome grab handle rubber hood latch gas shock and water stop angle. | $400 |
| 1150-0104 | Diamond plate lid for officer hosetray. 5.25" high with chrome grab handle rubber hood latch gas shock and water stop angle. | $400 |
| 1150-0105 | Diamond plate lid for center and driver hosetrays; 2/3 lid. 5.25" high with chrome grab handle rubber hood latches gas shocks and water stop angle. | $504 |
| 1150-0106 | Diamond plate lid for center and officer hosetrays; 2/3 lid. 5.25" high with chrome grab handle rubber hood latches gas shocks and water stop angle. | $504 |
| 1150-0107 | Nylon black strap with clip release on officer side front bumper tray. | $143 |
| 1150-0108 | Nylon black strap with clip release on driver side front bumper tray. | $143 |
| 1150-0109 | Nylon black strap with clip release on center front bumper tray. The strap shall be attached to the inboard side of the tray and shall not reduce the overall tray capacity | $143 |
| 1150-0111 | Additional divider for front bumper hose tray. | $108 |
| 1150-0112 | Hinged diamond plate lid for center bumper tray. Includes D-Ring latch and moon spring hold open. | $338 |
| 1150-0113 | Tray center of bumper with slats 34x11x14 for 150 feet of 1 3/4" double jacket hose for use with center bumper speaker option | $708 |
| 1150-0114 | Access cover in center bumper tray for center bumper mounted speaker. | $96 |
| 1150-0115 | Notch bumper tray lid for preconnected hose. Notch location: [#LOC]. | $140 |
| 1150-0116 | Bumper tray driver's side with slats 10 inches deep (approx 9 inches to slats). | $467 |
| 1150-0117 | Bumper tray driver's side with slats 12 inches deep (approx 11 inches to slats). | $467 |
| 1150-0118 | Bumper tray driver's side with slats 14 inches deep (approx 13 inches to slats). | $467 |
| 1150-0119 | Bumper tray center of bumper with slats 10 inches deep (approx 9 inches to slats). | $467 |
| 1150-0120 | Bumper tray center of bumper with slats 12 inches deep (approx 11 inches to slats). | $467 |
| 1150-0121 | Bumper tray center of bumper with slats 14 inches deep (approx 13 inches to slats). | $467 |
| 1150-0122 | Bumper tray officer's side with slats 10 inches deep (approx 9 inches to slats). | $467 |
| 1150-0123 | Bumper tray officer's side with slats 12 inches deep (approx 11 inches to slats). | $467 |
| 1150-0124 | Bumper tray officer's side with slats 14 inches deep (approx 13 inches to slats). | $467 |
| 1150-0125 | Divider center bumper hose tray running front to back with adjustable track (Provides two storage areas one left and one right of divider). | $245 |
| 1150-0126 | Divider center bumper hose tray running side to side with adjustable track (Provides two storage areas one ahead and one behind divider). | $245 |
| 1150-0127 | Tray center of bumper with slats 34x13x16 with divider running side to side | $708 |
| 1150-0128 | Notch front bumper tray for speaker/Q2B/radar. Will reduce front hose/equipment load. Center tray only. | $126 |
| 1150-0129 | Diamond plate lid for center hosetray. Includes chrome grab handle rubber hood latches and gas shock. | $400 |
| 1150-0130 | Black nylon cargo net on center front bumper tray. | $305 |
| 1150-0131 | Extinguisher tube in front bumper extension. Location: [#LOC]. | $785 |
| 1150-0132 | Tray center bumper for hydraulic/cord reel. | $772 |

| Item No. | Description | |
|---|---|---|
| 1150-0133 | Diamond plate raised full lid for extended front bumper. 6" high with dual chrome grab hands rubber hood latches and gas shocks. | $608 |
| 1150-0136 | Bumper tray center of bumper with slats 16 inches deep (approx 15 inches to slats). Mount tray 1" above gravel shield. | $557 |
| 1150-0137 | Diamond plate lid for center hosetray and jumpline next to tray. 5.25" high with chrome grab handle rubber hood latch gas shock and water stop angle if applicable. | $461 |
| 1150-0138 | Bumper pan driver's side without slats 4 inches deep with strap. For use with suction strainer only. | $467 |
| 1150-0139 | Nylon black strap with aluminum quick release buckle for front bumper hose tray. Strap to attach to front and rear walls of tray down low as applicable. Location: [#LOC]. | $117 |
| 1150-0140 | Bumper tray center of bumper with slats 14 inches deep (approx 13 inches to slats). Mount tray 1" above gravel shield. | $557 |
| 1150-0141 | Bumper tray officer's side with slats 12 inches deep (approx 11 inches to slats). Mount tray 1" above gravel shield. | $557 |
| 1150-0142 | Hinged diamond plate lid for center bumper tray. Includes (4) sides 1/4 turn latch and gas shock hold open. For use with raised compts only. | $399 |
| 1150-0143 | Hinged diamond plate lid for officer bumper tray. Includes (4) sides 1/4 turn latch and gas shock hold open. For use with raised compts only. | $399 |
| 1150-0144 | Diamond plate lid for center hosetray and jumpline next to tray. 8.25" high with chrome grab handle rubber hood latch gas shock and water stop angle if applicable. | $522 |
| 1150-0145 | Single crosslay on top of the front bumper gravel shield. Tray to be "U" shape 10" wide x 8" high x the width of the gravel shield. Vinyl cover [#COL] with end flaps to cover crosslay velcro along front edge fastened along back. Requires 24" extension. | $856 |
| 1150-0146 | Water stop angle. Gravel shield mounted. Requires raised lid and/or 28" bumper extension with reel trays. | $200 |
| 1150-0147 | Diamond plate lid for driver center and officer hose trays. 5.25" high with dual chrome grab handles SS butterfly latches and gas shocks. | $690 |
| 1150-0149 | Nylon black cargo net on sides for bumper crosslay. | $226 |
| 1150-0150 | Double crosslay on top of the front bumper gravel shield. Tray to be "U" shape approx 20" wide x 7.5" high x 90" wide minimum or as per application bumper width. Holds 200' of 1.75" DJ (each). Includes tri-fold diamond plate cover hinged at the front. Requires seperate side cover option and 28" extension. | $1,468 |
| 1150-0151 | Booster Reel Roller Assembly. Locate in front of center bumper tray. | $357 |
| 1150-0152 | Hinged diamond plate lid for officer side bumper tray. Includes D-Ring latch and gas shock hold open. | $309 |
| 1150-0153 | Bumper tray officer's side with slats located between front intake and frame extension. Tray to be approx 9" W (min) x full length x 14" D (13" to slats) to hold 25' of 5" LDH. Requires minimum 20" extension. | $467 |
| 1150-0154 | Bumper tray center of bumper with slats located to rear of Q2B. Tray to be approx 34"W x 9"L x 10" deep (9" to slats). | $677 |
| 1150-0157 | Diamond plate raised full lid for extended front bumper. 6" high with dual chrome grab hands rubber hood latches and gas shocks. | $725 |
| 1150-0158 | Bumper tray center of bumper without slats 12 inches deep. | $318 |
| 1150-0159 | Bumper tray center of bumper with slats 16 inches deep (approx 15 inches to slats). | $467 |
| 1150-0160 | Hinged smooth plate lid for center bumper tray. Includes D-Ring latch and gas shock hold open. Smooth plate lid will be painted with black Durabak. | $393 |
| 1150-0161 | Double crosslay on top of the front bumper gravel shield. Tray to be "U" shape to hold 200' of 1.75" DJ (each). Includes bi-fold diamond plate cover hinged at the rear. Requires separate side cover option and 28" extension. | $1,468 |
| 1150-0162 | Surface mounted tray center of bumper extension. Tray to be sized to fit between outboard reel trays and includes a 1" lip all the way around. Tray is for mounting of customer supplied hydraulic tools that will be utilized with reel applications. | $708 |
| 1150-0163 | Tray officer side bumper next to front intake/discharge. Half moon style for 25' of 5'' rolled hose. | $673 |
| 1150-0164 | Bumper tray center of bumper with black Turtle Tile 14" deep (approx. 13.25" from tile). Includes: hinged diamond plate lid for center bumper tray with Tri-Mark latch gas shock hold open and door ajar switch. | $963 |
| 1150-0165 | Bumper tray driver's side without slats 10 inches deep. | $399 |
| 1150-0166 | Bumper tray driver's side without slats 12 inches deep. | $399 |
| 1150-0167 | Bumper tray driver's side without slats 14 inches deep. | $399 |
| 1150-0168 | Bumper tray center of bumper without slats 10 inches deep. | $399 |
| 1150-0169 | Bumper tray center of bumper without slats 12 inches deep. | $399 |
| 1150-0170 | Bumper tray center of bumper without slats 14 inches deep. | $399 |
| 1150-0171 | Bumper tray officer's side without slats 10 inches deep. | $399 |
| 1150-0172 | Bumper tray officer's side without slats 12 inches deep. | $399 |
| 1150-0173 | Bumper tray officer's side without slats 14 inches deep. | $399 |

| Item No. | Description | |
|---|---|---|
| 1150-0174 | Slatted Duradek flooring in driver side bumper tray. | $60 |
| 1150-0175 | Slatted Duradek flooring in center bumper tray. | $60 |
| 1150-0176 | Slatted Duradek flooring in officer side bumper tray. | $60 |
| 1150-0177 | Notch front bumper tray for speaker/Q2B. Will reduce front hose/equipment load. Driver's side only. | $126 |
| 1150-0178 | Hinged diamond plate lid for center bumper tray. Includes push button latch and gas shock hold open. | $311 |
| 1150-0179 | Bumper tray center of bumper without slats 16 inches deep. | $399 |
| 1150-0180 | Yellow vinyl lid with velcro fasteners for bumper tray center. | $185 |
| 1150-0181 | Nylon black strap with aluminum quick release buckle for front bumper hose tray. Strap to attach to side walls of tray down low as applicable. Location: [#LOC]. | $117 |
| 1150-0184 | Vinyl [#COL] side covers for diamond plate bumper crosslay cover. | $191 |
| 1150-0185 | Hinged diamond plate lid for center bumper tray. Includes push button latch and moon spring hold open. | $311 |
| 1150-0187 | Nylon yellow strap with aluminium quick release buckle for front bumper hose tray. Strap to attach to front and rear walls of tray down low as applicable. Location: [#LOC]. | $117 |
| 1150-0196 | Tray officer side bumper next to front intake. Half moon style for 20' of 6" rolled hose. | $673 |
| 1150-0197 | Nylon black strap with aluminum quick release buckle. Location: driver officer and center top of front bumper gravel shield. | $348 |
| 1150-0198 | Notch front bumper tray for speaker/Q2B. Will reduce front hose/equipment load. Officer's side only. | $126 |
| 1150-0199 | Nylon black cargo net with bungee hold downs on sides for bumper crosslay. | $279 |
| 1150-0200 | Bumper tray center of bumper with slats 18 inches deep (approx 17 inches to slats). | $467 |
| 1150-0201 | Notch front bumper tray for speaker/Q2B. Notch to be sized as close to obstacle as possible to provide more storage space in tray. Will reduce front hose/equipment load. Center only. | $126 |
| 1150-0202 | Bumper tray center of bumper with slats 12 inches deep (approx 11 inches to slats). The bumper tray shall be raised 2" above the gravel shield (12" total depth). The bumper tray shall be approximately 17" front to rear X 30" in length side to side. A divider shall be centered (spanning from front to back) making a left hand and right hand center bumper tray. | $467 |
| 1150-0203 | Hinged smooth plate lid for center bumper tray. Includes D-Ring latch and gas shock hold open. Smooth plate lid will be painted with black Scorpion coating. | $393 |
| 1150-0204 | Stainless steel roller assemblies for bumper crosslays. Includes side rollers only; no bottom. Replaces stainless scuff plates on bumper crosslays. | $296 |
| 1150-0205 | Recessed bumper crosslay. Includes raised lid with outboard fixed panels for optional equipment. Requires 20" extension and side covers. | $3,515 |
| 1150-0206 | Hinged diamond plate lid for center bumper tray. Includes push button latch chrome grab handle and gas shock hold open. | $360 |
| 1150-0207 | Hinged diamond plate lid for center bumper tray. Includes 1/4 turn latch and moon spring hold open. | $311 |
| 1150-0208 | Bumper tray officer's side without slats approximately 14 inches deep 17" front to rear X 9" in length side to side. | $467 |
| 1150-0209 | Bumper tray driver's side without slats approximately 14 inches deep 17" front to rear X 17" in length side to side. | $467 |
| 1150-0210 | Tray driver side bumper next to frame. Half moon style for 25' of 5'' rolled hose. | $673 |
| 1150-0211 | Bumper tray center of bumper with slats 16 inches deep (approx 15 inches to slats). Mount tray 1" above gravel shield. Forward bottom edge has 45 degree cut to improve approach angle. Forward cut height begins at approximate tray depth as it aligns with bumper bottom continuing rearward at a 45 degree angle. | $668 |
| 1150-0212 | Nylon black strap with clip release on officer side front bumper tray running front to back. | $143 |
| 1150-0213 | Bumper tray center of bumper (w/o slats) 10 inches deep. | $467 |
| 1150-0214 | Traffic cone storage on front bumper extension. Cones to be oriented downard through a 7 3/4" hole in the gravelshield. Includes nylon strap with aluminum buckle. Location: [#LOC]. | $386 |
| 1150-0215 | Hinged diamond plate lid for center bumper tray. Includes 1/4 turn latch and two (2) gas shock hold open. | $340 |
| 1150-0216 | Bumper tray lid(s) to be constucted using 3/16" aluminum ipos. | $149 |
| 1150-0217 | Hinged diamond plate lid for officer side bumper tray 2/3 of length hinged 1/3 remaining length is fastened in place. Hinged inboard/fixed portion outboard. Includes D-Ring latch and gas shock to hold open the hinged section. | $309 |
| 1150-0218 | Bumper tray center of bumper with slats 12 inches deep (approx 11 inches to slats). Mount tray 1" above gravel shield. | $557 |
| 1150-0219 | Additional gas shock on front bumper tray lid. Location: [#LOC]. | $160 |
| 1150-0220 | Tray driver side bumper outboard for hydraulic/cord reel 18 inches deep IPOS. | $862 |
| 1150-0221 | Tray officer side bumper outboard for hydraulic/cord reel 18 inches deep IPOS. | $862 |
| 1150-0223 | Bumper tray officer's side with slats 16 inches deep (approx 15 inches to slats). | $467 |

| Item No. | Description | |
|---|---|---|
| 1150-0224 | Bumper tray officer's side without slats located between front intake and frame extension. Tray to be approx 9" W (min) x full length x 14" D (13" to slats) to hold 25' of 5" LDH. Requires minimum 20" extension. | $399 |
| 1150-0225 | The rear wall of bumper tray to have louvers for additional ventilation. Location: [#LOC]. | $182 |
| 1150-0226 | Smooth plate raised full lid with black Durabak finish for extended front bumper. 6" high with dual chrome grab hands rubber hood latches and gas shocks. | $1,491 |
| 1150-0227 | Bumper tray center of bumper with slats 18 inches deep (approx 17 inches to slats). | $399 |
| 1150-0228 | Bumper tray driver's side of bumper with black Turtle Tile 14" deep (approx. 13.25" from tile). | $467 |
| 1150-0230 | Bumper trough full length mounted on top of gravel shield. Trough shall run side to side 4" high 7" wide made from 3/16" smooth plate aluminum. | $250 |
| 1150-0231 | Nylon black strap with aluminum quick release buckle for front bumper hose tray. Strap to attach to front and rear walls of tray as high as possible. Location: [#LOC]. | $117 |
| 1150-0232 | Hinged diamond plate lid for center bumper tray. Includes Tri-Mark latch and gas shock hold open. | $416 |
| 1150-0233 | Hinged smooth plate lid for driver side bumper tray. Includes D-Ring latch and gas shock hold open. Lid to painted with black Scorpion brand coating inside and outside surfaces (smooth finish). | $411 |
| 1150-0234 | Bumper tray driver's side with slats 10 inches deep (approx 9 inches to slats). Tray interior to be painted with black Scorpion coating (smooth finish) Slat assembly to remain unpainted aluminum. | $570 |
| 1150-0235 | Diamond plate lid 3/16 " thick for driver center and officer hose trays. 5.25" high with dual chrome grab handles SS butterfly latches and gas shocks. | $751 |
| 1150-0236 | Recessed bumper double crosslay to hold of 200' of 1.75" DJ hose in each crosslay. The crosslay floor/bottom shall be slotted to allow drainage (no slats). Includes hinged bi-fold raised lid in center with outboard fixed panels for optional equipment and stainless steel scuff guards at each side of crosslay opening across bottom and sides. Requires 28" extension side covers 12" heavy duty bumper and engineering approval. | $3,802 |
| 1150-0243 | Bumper tray officer's side with slats 10 inches deep (approx 9 inches to slats). Mount tray 2" above gravel shield. | $557 |
| 1150-0245 | Bumper tray driver's side with slats 10 inches deep (approx 9 inches to slats). Mount tray 2" above gravel shield. | $557 |
| 1150-0247 | Hinged diamond plate lid raised 3" high for center bumper tray. Includes a single chrome grab handle SS butterfly latches and gas shocks. | $379 |
| 1150-0248 | Divider driver side bumper hose tray running side to side with adjustable track (Provides two storage areas one ahead and one behind divider). | $245 |
| 1150-0249 | Divider officer side bumper hose tray running side to side with adjustable track (Provides two storage areas one ahead and one behind divider). | $245 |
| 1150-0250 | Single crosslay on top of the front bumper gravel shield. Tray to be "U" shape approx 10" wide x 7.5" high x 90" wide. Holds 200' of 1.75" DJ (each). Includes diamond plate cover hinged at the front. Requires seperate side cover and 24" extension. | $1,150 |
| 1150-0252 | Recessed bumper double crosslay. Includes 5.25" full width raised lid. The crosslay shall only be accessible through the top lid (no side access). The crosslay floor/bottom shall be slotted to allow drainage (no slats). The crosslay shall include an adjustable divider going from side to side to create a forward and rear crosslay run area. Requires 28" extension and engineering approval. | $4,348 |
| 1150-0253 | Black nylon cargo net on driver side front bumper tray. | $305 |
| 1150-0254 | Bumper tray driver side of bumper with slats 14 inches deep (approx 13 inches to slats) fabricated from smooth plate aluminum. Mount tray 2" above gravel shield. Outside facing surface of tray below bumper shall be painted black Durabak. | $650 |
| 1150-0255 | Hinged smooth plate lid for driver side bumper tray. Includes D-Ring latch and gas shock hold open. Smooth plate lid will be painted with black Durabak. | $393 |
| 1150-0256 | Bumper tray(s) to be constructed using smooth plate aluminum with exterior surface painted black Durabak. | $186 |
| 1150-0257 | Recessed bumper double crosslay to hold of 200' of 1.75" DJ hose with pistol grip (raise lid an additional 1") in each crosslay. The crosslay floor/bottom shall be slotted to allow drainage (no slats). Includes hinged bi-fold raised lid in center with outboard fixed panels for optional equipment and polished stainless steel scuff guards at each side of crosslay opening across bottom and sides. Requires 28" extension side covers 12" heavy duty bumper and engineering approval. | $3,802 |
| 1150-0258 | Recessed bumper double crosslay to hold of 200' of 1.75" DJ hose in each crosslay. The crosslay floor/bottom shall be slotted to allow drainage (no slats). Includes hinged bi-fold raised lid in center with outboard fixed panels for optional equipment and stainless steel rollers at each side of crosslay opening across bottom and sides. Requires 28" extension side covers 12" heavy duty bumper and engineering approval. | $3,954 |
| 1150-0259 | .Bumper tray with no slats approx. 6" deep extending full width of the bumper as applicable based on outboard options. Includes notched frame extensions to provide flat floor for the tray. | $869 |

| Item No. | Description | |
|---|---|---|
| 1150-0260 | Recessed bumper double crosslay to hold of 200' of 1.75" DJ hose in each crosslay. The crosslay floor/bottom shall be slotted to allow drainage (no slats). Includes full width hinged bi-fold raised lid and stainless steel scuff guards at each side of crosslay opening across bottom and sides. Requires 28" extension side covers 12" heavy duty bumper and engineering approval. | $4,212 |
| 1150-0261 | Diamond plate lid for driver center and officer hose trays. approx 6.25" high or as applicable to allow for jumpline swivel to be under lid pre-connected. with dual chrome grab handles SS butterfly latches and gas shocks. | $732 |
| 1150-0262 | Vinyl cover for bumper tray notch. Includes diamond plate over perimeter of cover. | $257 |
| 1150-0263 | Recessed bumper crosslay to hold of 150' of 1.75" DJ hose. The crosslay floor/bottom shall be slotted to allow drainage (no slats). Includes full width flat lid. Requires 20" extension side covers and 10" heavy duty bumper. | $3,515 |
| 1150-0264 | Recessed bumper double crosslay to hold 200' of 1.75" DJ hose in each crosslay with a nozzle as applicable. The crosslay floor/bottom shall be slotted to allow drainage (no slats). Includes hinged bi-fold full width raised lid for open full access to crosslays when open and stainless steel scuff guards at each side of crosslay opening across bottom and sides. Requires 28" extension side covers 12" heavy duty bumper and engineering approval. Lid shall be raised approx 5.25" above top of bumper for capacity to ensure ease of use with a nozzle. Lid to be secured in closed position with S/S Butterfly latches. Capacity may be affected and may require a compact nozzle depending on hose selection as loaded. | $4,007 |
| 1150-0265 | One continuous recessed bumper tray extending over the center and driver side of the bumper shall be provided with a raised 5.25" lid centered side to side. | $3,726 |
| 1150-0266 | Smooth plate raised full lid with black Durabak finish for extended front bumper. 6" high with one 24" Haralson Metals Stainless knurled handrail in place of grab handles centered on the lid butterfly latches on side and gas shocks. | $1,542 |
| 1150-0267 | Bumper tray center / driver side of bumper w/o slats 12 inches deep. Tray to extend to driver side over frame extension. Officer side of tray to be approx 11" towards officer side from center. Tray to be 12" deep each side of step over frame. Requires drop frame extension option. | $505 |
| 1150-0268 | Bumper tray officer side / center of bumper with slats 12 inches deep (approx 11 inches to slats). Tray to extend to center area over frame extension. Inboard side of tray to be approx 14" towards officer side from center. Requires drop frame extension option. | $642 |
| 1150-0269 | Bumper tray to be constucted using 3/16" aluminum ipos. | $104 |
| 1150-0270 | Tray officer side bumper next to frame. Half moon style for (3) 50' sections of 1.5'' rolled hose. | $673 |
| 1150-0271 | Tray driver side bumper next to frame. Half moon style for (6) 50' sections of 1'' rolled hose. | $673 |
| 1150-0272 | Raised lid over bumper tray to be extended over jumpline swivel on top of gravel shield. For use with 2" swivel only. | $60 |
| 1150-0273 | Nylon black cargo net with black powder coated quick release buckles on sides for bumper crosslay. | $328 |
| 1150-0274 | Stainless steel roller assemblies for bumper crosslays. Includes side rollers and bottom. Replaces stainless scuff plates on bumper crosslays. | $307 |
| 1150-0275 | Hinged smooth plate lid for center bumper tray. Includes 1/4 turn latch and gas shock hold open. Smooth plate lid will be painted black Durabak. | $388 |
| 1150-0276 | Nylon black strap with aluminum quick-release buckle. Location: driver officer and (2) center top of front bumper gravel shield. | $467 |
| 1150-0280 | Bumper tray center of bumper with slats 17 inches deep (approx 16 inches to slats). Mount tray 1" above gravel shield. Exterior of tray to be painted FLNA4145 Black. | $897 |
| 1150-0281 | Hinged diamond plate lid for driver side bumper tray. Includes D-Ring latch and moon spring hold open. | $338 |
| 1150-0282 | Hinged diamond plate lid for center bumper tray. Includes Southco model C2-32-11-3 push button latch and gas shock hold open. | $311 |
| 1150-0283 | Hinged diamond plate lid for center and officer bumper tray. Includes (2) D-Ring latches (2) gas shock hold open and smooth plate spacer between bumper trays. | $646 |
| 1150-0284 | Nylon black strap with aluminum quick release buckle. Location: driver officer and center top of front bumper gravel shield. Mount at final inspection. | $348 |
| 1150-0286 | Shallow bumper tray located center of the bumper without slats. Tray to be as wide and as deep as possible while maintaining a flat floor without notches or protrusions. | $317 |
| 1150-0287 | Hinged diamond plate lid for officer side bumper tray. Includes D-Ring latch and moon spring hold open. | $338 |
| 1150-0288 | Bumper tray secondary. Tray located towards the rear beneath first center tray for additional storage. Tray to be as long front to back as possible while maintaining a flat floor without notches or protrusions and still have the seconday lid removable. Tray to be as wide as applicable and as deep as other trays on the truck. | $416 |
| 1150-0289 | Diamond plate lid for driver center and officer hose trays. 5.25" high with dual chrome grab handles SS butterfly latches and gas shocks. Hinge will be located as low down and far back as possible on fixed portion of the lid. | $690 |
| 1150-0290 | All fabricated aluminum sheet metal parts installed on the bumper shall be made using smooth plate in place of standard. Includes gravel shield tray(s) lid(s) and other miscellanous parts. | $186 |

| Item No. | Description | |
|---|---|---|
| 1150-0292 | Bumper tray with no slats extending full width of the bumper as applicable based on outboard options. Includes notched frame extensions to provide at least 6" tray depth directly above the extensions. Tray to have multiple depth to meet customer specific requirements. | $1,640 |
| 1150-0293 | Bumper tray driver side of bumper made as large as possible with slats 14 inches deep (approx 13 inches to slats). Mount tray 1" above gravel shield. | $660 |
| 1150-0294 | Insulation on exterior of the bumper tray assembly. Location: Driver side. | $242 |
| 1150-0296 | Hinged diamond plate lid for officer bumper tray. Includes Tri-Mark latch and gas shock hold open. | $416 |
| 1150-0297 | Bumper tray driver side of bumper made as large as possible without slats 14 inches deep. Mount tray 1" above gravel shield. | $660 |
| 1150-0298 | Bumper tray center of bumper without slats 14 inches deep. Mount tray 1" above gravel shield. | $557 |
| 1150-0299 | Tray officer side bumper inboard of frame. Half moon style for 25' of 5'' rolled hose. | $673 |
| 1150-0300 | Bumper tray driver's side with slats 16 inches deep (approx 15 inches to slats). | $467 |
| 1150-0302 | Raised diamond plate lid with dual chrome grab handles stainless steel butterfly latches and gas shocks. The lid shall be full width (as applicable based on outboard options) and high enough to accomodate reels rescue tools and equipment as applicable per customer specific requirements. | $690 |
| 1150-0303 | Nylon black strap with aluminum quick release buckle for front bumper hose tray. Strap to attach to front and rear top of tray. Location: [#LOC]. | $117 |
| 1150-0304 | Recessed bumper double crosslay to hold 150' of 1.75" DJ hose in each crosslay. The crosslay floor/bottom shall be slotted to allow drainage (no slats). Includes hinged bi-fold raised lid and stainless steel scuff guards at the crosslay opening across bottom and sides. Requires 28" extension side covers 12" heavy duty bumper and engineering approval. Crosslay only open on one side of the bumper extension. | $4,212 |
| 1150-0305 | Bumper tray full width of bumper without slats 12" deep. For use with outboard options. Tray to extend to driver/officer area over frame extension. Center of tray to be approx 12" deep with outboard areas approx. 5.5" deep. Requires drop frame extension option. | $859 |
| 1150-0306 | Recessed bumper double crosslay to hold of 200' of 1.75" DJ hose in each crosslay. The crosslay floor/bottom shall be slotted to allow drainage (no slats). Includes full width hinged non bi-fold raised lid with side lips to hold up hinged drop down doors. Hinge will be southco brand hinge to keep lip held in the open position when in use. Rubber hold down latches ipo butterfly latches will be used to secure lid in closed position. Stainless steel scuff guards at each side of crosslay opening across bottom and sides with a drop down door for side access. Requires 28" extension side covers 12" heavy duty bumper and engineering approval. | $4,692 |
| 1150-0307 | Bumper tray center of bumper with slats 16 inches deep (approx 15 inches to slats). Mount tray 2" above gravel shield. | $557 |
| 1150-0308 | Removable recessed lid for front bumper tray. Includes hand hole cutout for ease of removal to access. See drawing for specific customer location requirements. Finish: Sanded Aluminum. | $281 |
| 1150-0309 | Hinged smooth plate lid with DA finish for center bumper tray. Includes 1/4 turn latch and gas shock hold open. | $311 |
| 1150-0310 | Modify bumper crosslay. Includes lower side to side divider to 7" tall and ship loose. Add adjustable tracks on front and rear center with divider centered; installed. Single gas shock in center of lid. Outboard hold open devices (see photos on file with sales). | $771 |
| 1150-0312 | Bumper tray full width of bumper (for use with outboard options) without slats approx. 6" inches deep outboard of frame rails and 12" deep center between rails. Outboard sides raised for airhorns. | $1,116 |
| 1150-0313 | Recessed bumper crosslay to hold of 200' of 1.75" DJ hose. The crosslay floor/bottom shall be slotted to allow drainage (no slats). Includes full width lid. Requires minimum 20" extension side covers and 12" heavy duty bumper. | $3,515 |
| 1150-0315 | Hinged diamond plate lid for single center/driver bumper tray. Includes (2) push button latches and (2) gas shock hold opens. | $503 |
| 1155-0001 | Receiver under body rearward of wheel well (PR) for winch or rope use (does not include 12V power plug). | $3,339 |
| 1155-0002 | Winch electric front mounted Ramsey 12000 lb. Includes access door with quarter turn latch and spring hold open device. | $4,174 |
| 1155-0003 | Winch Warn Series 8 - 8000lb with 125' 3/8" plated cable. | $3,584 |
| 1155-0005 | Winch Warn Series 12 12000 lb. with 125' 3/8" plated cable. Includes access door with quarter turn latch and spring hold open device. Locate: Mounted to the chassis frame extension centered at the front bumper area. | $5,249 |
| 1155-0013 | Winch Warn Series 12 12000 lb. with 125' 3/8" plated cable. Includes access door hinged rearward that is smooth plate alum (IPO tread) and painted with black Scorpion brand coating inside and outside surfaces (smooth finish). Latch to be D-Ring style (IPO std. 1/4 turn latch). Lid to have 1 gas shock. | $5,380 |

| Item No. | Description | |
|---|---|---|
| 1155-0014 | A 6000 lb Warn multi-mount (portable) electric reversible winch with 125' of 3/8'' plated wire rope and a replaceable clevis hook shall be installed and shall be controlled with a 12' remote control switch. Includes rollers. | $2,292 |
| 1155-0016 | 20000lb Hydraulically Driven Winch. Ramsey Model H800R (Mfg.Part# 124410) Hydraulic Winch with Dow-Lok Clutch roller guide assembly minimum 200' of 5/8" Wire Rope Assembly Winch Mounting Brackets PTO and Hydraulic Pump. Maudlin to supply and install winch E-One to complete installation. | $13,750 |
| 1155-0018 | Winch Warn Series 12-S Spydura Pro 12000 lb. with 100' of 7/16" synthetic rope and Hawse fairlead. Includes access door with quarter turn latch and spring hold open device. | $5,866 |
| 1155-0019 | Winch Warn Series 12 12000 lb. Includes 100' 7/16" Spydura Pro synthetic rope fairlead & 32' remote. Locate: Mounted to the chassis frame extension centered at the front bumper area. A service access to the winch shall be provided. | $5,644 |
| 1155-0021 | Warn Winch 9000 lb. with 125' 3/8" plated cable. Includes access door with quarter turn latch and spring hold open device. Locate: Mounted to the chassis frame extension centered at the front bumper area. | $3,064 |
| 1160-0000 | Bumper 10" stainless steel. | $1,306 |
| 1160-0001 | Bumper 12" high swept back stainless steel. | $1,477 |
| 1160-0002 | Bumper reinforcement backing. For use with 10" SS or heavy duty bumpers only. | $464 |
| 1160-0004 | Stainless Steel 10" high front bumper. Requires extended front bumper. | $1,305 |
| 1160-0008 | 3/16" Front Bumper Gravel Shield. | $133 |
| 1160-0012 | 12" Front Bumper Gravel Shield Extension. | $148 |
| 1160-0013 | 16" Front Bumper Gravel Shield Extension. | $282 |
| 1160-0014 | 20" Front Bumper Gravel Shield Extension. | $501 |
| 1160-0015 | 24" Front Bumper Gravel Shield Extension. | $663 |
| 1160-0016 | 28" Front Bumper Gravel Shield Extension. | $802 |
| 1160-0020 | License plate holder mounted center of front bumper. | $41 |
| 1160-0021 | Number plate removable size to fit between air horns on front bumper. Spaced out from face of bumper so plate can be removed. | $180 |
| 1160-0030 | Steel tow bar located below front bumper mounted to chassis extensions for towing purposes only painted black. | $1,884 |
| 1160-0031 | Notch front bumper for low "S" type front intake. Includes tray below pipe extending from cab to bumper. | $1,110 |
| 1160-0034 | 8" Front Bumper Extension. | $148 |
| 1160-0041 | Heavy duty front bumper 10" high with full wrap around. To be painted job color. | $2,291 |
| 1160-0042 | Heavy duty front bumper 10" high with full wrap around. To be painted 767681 EG black. | $2,291 |
| 1160-0049 | License plate holder mounted officer side of front bumper. | $41 |
| 1160-0050 | 12" heavy duty front bumper with full wrap around. To be painted L0318EG metallic silver. | $2,291 |
| 1160-0051 | 3/16" Front Bumper Gravel Shield. Smooth plate painted with black Durabak. | $1,374 |
| 1160-0052 | Recessed winch receiver in front bumper for model QM5000 portable winch. Includes swing down front center section of bumper for winch access bumper reinforcement winch enclosure raised lid and port winch wiring. For use on E-ONE chassis with 10" high 28'' ext bumper only. | $4,966 |
| 1160-0053 | 14" Front Bumper Gravel Shield Extension. | $216 |
| 1160-0054 | Overlay front heavy duty bumper with diamond plate panels. | $392 |
| 1160-0055 | Guard straps for bumper mtd recessed Q2B - polished stainless steel. | $313 |
| 1160-0060 | Dock bumpers (4) on front bumper equally spaced (as applicable). | $311 |
| 1160-0061 | 10" heavy duty front bumper with full wrap around. To be painted L0318EG metallic silver. | $2,291 |
| 1160-0064 | Heavy duty front bumper 10" high with full wrap around. To be painted [#COL]. | $2,291 |
| 1160-0065 | Heavy duty front bumper 10" high with full wrap around. Center of bumper to have a 5" deep notch for recessed Q2B. Bumper to be painted job color. | $2,843 |
| 1160-0066 | License plate holder mounted driver side of front bumper. | $41 |
| 1160-0068 | 1/8" Front Bumper Gravel Shield. Smooth plate painted with black Durabak. | $1,374 |
| 1160-0084 | Heavy duty 12" front bumper with full wrap around. To be painted job color. | $2,291 |
| 1160-0086 | Removable number plate with mounting brackets. Locate centered on front bumper. Plate to be painted job color. Plate to be 8"W x 8"H. Lettering and/or graphics not included. | $269 |
| 1160-0088 | Removable number plate with mounting brackets. Locate [#LOC]. Plate to be painted job color. Plate to be 12"W x 8"H. Lettering and/or graphics not included. | $269 |
| 1160-0094 | 18" Front Bumper Gravel Shield Extension. | $393 |
| 1160-0095 | Heavy duty front bumper with full wrap around. To be painted FLNA 91733 silver. | $2,291 |
| 1160-0104 | Swing down front section of bumper. 10" front bumper only. Requires extended front bumper and bumper reinforcement. | $1,188 |
| 1160-0105 | Removable number plate with mounting brackets. Locate [#LOC]. Plate to be painted lower job color (if cab is painted two tone). Plate to be 14"W x 8"H. Lettering and/or graphics not included. | $295 |
| 1160-0108 | 3/16" Front Bumper Gravel Shield. Smooth plate painted with black Scorpion coating. | $1,374 |
| 1160-0116 | Heavy duty front bumper 10" high with full wrap around. Driver side of bumper to have a 5" deep notch for recessed Q2B. Bumper to be painted job color. | $2,843 |

| Item No. | Description | |
|---|---|---|
| 1160-0117 | License plate holder mounted driver side of front bumper. | $41 |
| 1160-0120 | 1/8" Front Bumper Gravel Shield. Includes 1" return break on each side of heavy duty bumper. | $162 |
| 1160-0121 | Diamond plate lower gravelshield. Located under side of the front bumper extension. | $781 |
| 1160-0122 | 20" Front Bumper Gravel Shield Extension. The extension shall extend further forward and each side to align with the edge of the bumper. | $574 |
| 1160-0123 | 10 GA brushed stainless steel overlay on front face of 12" heavy duty bumper. | $604 |
| 1160-0124 | Heavy duty 12" front bumper with full wrap around. To be painted the same as the upper area two tone job color. | $2,291 |
| 1160-0125 | Heavy duty front bumper 10" high with full wrap around. Officer side of bumper to have a 5" deep notch for recessed Q2B. Bumper to be painted job color. | $2,843 |
| 1160-0129 | License plate holder hinge mounted below center of front bumper. | $81 |
| 1160-0131 | 1/8" Front Bumper Gravel Shield for heavy duty bumper. Includes 1" turn down around perimeter of HD bumper. | $219 |
| 1160-0133 | Heavy duty front bumper 10" high with full wrap around. Center of bumper to have a 5" deep notch for recessed Q2B. Bumper to be painted 2-tone job color. | $2,843 |
| 1160-0136 | Bumper guide pinned (PR). | $512 |
| 1160-0137 | Heavy duty 12" front bumper with full wrap around. To be painted [#COL]. | $2,291 |
| 1160-0138 | 3/16" Front Bumper Gravel Shield. Extend shield to flush with heavy duty bumper edge. | $544 |
| 1160-0139 | 20" Front Bumper Gravel Shield Extension for recessed crosslay to be used on commercials only. | $2,557 |
| 1160-0140 | 3/16" Front Bumper Gravel Shield for heavy duty bumper. Includes 1" turn down around perimeter of HD bumper. | $350 |
| 1160-0141 | 3/16" Front Bumper Gravel Shield with 1" turn down lips to protect the top edge of the heavy duty bumper from damage. Smooth plate painted with black Durabak. | $1,426 |
| 1160-0142 | Front frame extensions to be drop style IPOS. Includes integral tow eyes below bumper. | $708 |
| 1160-0144 | Heavy duty 12" front bumper with full wrap around. Center of the bumper to be extended (boxed out) for Q2B to be recessed without intruding into the bumper trays recessed crosslays or any other options as applicable. To be painted [#COL]. | $2,964 |
| 1160-0145 | Notch front bumper for low "S" type front intake. 10" deep tray below pipe extending from cab to bumper to hold at minimum 25' of 5" LDH. Include nylon strap (seat belt type) for tray. | $1,964 |
| 1160-0147 | Heavy duty front bumper 10" high with full wrap around. To be constructed of 110000 PSI frame rail material and painted job color. | $3,435 |
| 1160-0149 | LINE-X bumper package: Includes all visible diamond plate surfaces including gravel shield exterior surface of trays and lids(flat or raised). If equipped exterior of the fabricated booster reel housing fabricated box for booster reel rollers and winch access door shall be included in this package. | $922 |
| 1160-0153 | Heavy duty front bumper 10" high with full wrap around for commercial chassis. Center of bumper to have a 5" deep notch for recessed Q2B. Bumper to be painted job color. To include one piece modular mounting bracket for commercial chassis with welded integral front frame extension mounting rails for added durability and strength. | $3,553 |
| 1160-0154 | Heavy duty front bumper 12" high with full wrap around. Driver side of bumper to have a 5" deep notch for recessed Q2B. Bumper to be painted job color. | $2,843 |
| 1160-0155 | LINE-X bumper: The bottom lip of the bumper shall have LINE-X finish. | $214 |
| 1160-0156 | Durabak Black bumper package: Includes all visible plate surfaces including gravel shield exterior surface of trays and lids(flat or raised). If equipped exterior of the fabricated booster reel housing fabricated box for booster reel rollers and winch access door shall be included in this package. | $922 |
| 1160-0157 | Heavy duty front bumper 10" high with full wrap around. Center of bumper to have a 5" deep notch for recessed Q2B. Corners to be tapered 8"x8". (Not available with reel trays). Bumper to be painted job color. | $3,040 |
| 1160-0158 | Heavy duty 12" front bumper with full wrap around. Corners to be tapered 8"x8". (Not available with reel trays). To be painted job color. | $2,488 |
| 1160-0159 | 30" Front Bumper Gravel Shield Extension. | $962 |
| 1160-0161 | Diamond plate overlay on the sides and angled corners of heavy duty bumper. | $345 |
| 1160-0164 | Heavy duty inner city front bumper 10" high with full angle corners. Includes support wings for angled corners. Center of bumper to have a 5" deep notch for recessed Q2B. Bumper to be painted job color. | $3,139 |
| 1160-0165 | Heavy duty front bumper 10" high with full wrap around. Officer side notched for front intake recessed as inboard as possible. Bumper to be painted job color. | $3,040 |
| 1160-0166 | 26" Front Bumper Gravel Shield Extension. | $732 |
| 1160-0167 | Heavy duty 12" front bumper with full wrap around. Center of bumper to have a 5" deep notch for recessed Q2B. Officer side notched for front intake recessed as inboard as possible. Corners to be tapered 8"x8". To be painted job color. | $3,386 |
| 1160-0168 | Heavy duty bumper wrap around lower edge guard. Extends from bottom of stripe to bottom of bumper. | $267 |
| 1160-0169 | Heavy duty 12" front bumper with full wrap around. Driver side of bumper to have a 5" deep notch for recessed Q2B. Officer side notched for front intake recessed as inboard as possible. Corners to be tapered 8"x8". To be painted job color. | $3,386 |

| Item No. | Description | |
|---|---|---|
| 1160-0170 | 3/16" Front Bumper Gravel Shield with 1" turn down lip. Smooth plate painted with LINE-X. | $1,272 |
| 1160-0175 | Zinc flame spray coating for heavy duty front bumper (outside and inside surfaces) prior to painting. | $478 |
| 1160-0176 | 3/16" smooth plate front bumper gravel shield with DA finish. | $133 |
| 1160-0177 | Heavy duty 10" front bumper with full wrap around. Corners to be tapered 8"x8". (Not available with reel trays). To be painted job color. | $2,483 |
| 1160-0178 | Heavy duty inner city front bumper 10" high with full angle corners. Includes support wings for angled corners. Driver side of bumper to have a 5" deep notch for recessed Q2B. Officer side of bumper to have notch for front suction. Bumper to be painted job color. | $3,715 |
| 1200-0018 | T handle transmission selector. | $1,562 |
| 1200-0020 | TransSynd synthetic transmission fluid for EVS3000. | $196 |
| 1200-0021 | TransSynd synthetic transmission fluid for EVS 4000. | $308 |
| 1200-0062 | The engine oil and transmission dip sticks to have tags. Tags to be attached to each by cable. Use colored tag to match dip stick color. | $156 |
| 1200-0063 | The engine oil dipstick to have yellow handle and the transmission dipstick to have a red handle. | $222 |
| 1200-0065 | Transfer Case for All Wheel Drive- single speed with front axle declutch | $9,888 |
| 1200-0076 | Transmission to be 4500 in place of the 4000. Gears 1 through 4 shall be programmed as "D" (Drive). Gear 5 to be programmed to activate via "mode" switch on shifter. | $3,061 |
| 1200-0083 | Transmission re-programming. ''D'' allows transmission to shift from 1st - 4th gear and ''Mode'' allows 5th gear. | $691 |
| 1200-0115 | Polyurethane engine mounts. Cummins engines only. | $112 |
| 1200-0224 | Transmission re-programming to allow for 6th gear (lower engine speed/better fuel economy). Rear axle gearing will be the same as used with 5 speed transmission. | $691 |
| 1200-0225 | Eng/Trans Cummins ISL 450HP/EVS3000 2010 EPA compliant engine. Transmission includes (1) driver side and (1) top PTO port. | $98,339 |
| 1200-0280 | Transfer Case for HS chassis - single speed with rear axle and pump declutches. | $18,225 |
| 1200-0309 | Eng/Trans Cummins ISL 330HP/EVS3000 2016 EPA compliant engine. | $79,840 |
| 1200-0310 | Eng/Trans Cummins ISL 350HP/EVS3000 2016 EPA compliant engine. | $82,706 |
| 1200-0311 | Eng/Trans Cummins ISL 380HP/EVS3000 2016 EPA compliant engine. | $90,840 |
| 1200-0312 | Eng/Trans Cummins ISL 400HP/EVS3000 2016 EPA compliant engine. | $96,262 |
| 1200-0313 | Eng/Trans Cummins ISL 450HP/EVS3000 2016 EPA compliant engine. | $97,093 |
| 1200-0314 | Eng/Trans Cummins ISL 450HP/EVS3000 2016 EPA compliant engine. For use with HS rear engine chassis only. | $97,093 |
| 1200-0315 | Eng/Trans Cummins ISX12 400HP with EVS4000 transmission. 2016 EPA Compliant. | $123,367 |
| 1200-0316 | Eng/Trans Cummins ISX12 450HP with EVS4000 transmission. 2016 EPA Compliant. | $124,875 |
| 1200-0317 | Eng/Trans Cummins ISX12 500HP with EVS4000 transmission. 2016 EPA Compliant. | $126,382 |
| 1200-0319 | Eng/Trans Cummins ISX15 550HP with EVS4000 transmission. 2016 EPA Compliant. | $133,311 |
| 1200-0321 | Eng/Trans Cummins ISX15 600HP with EVS4000 transmission. 2016 EPA Compliant. | $136,622 |
| 1200-0328 | Eng/Trans Cummins ISX15 455HP with EVS4000 transmission. 2016 EPA Compliant. | $129,649 |
| 1200-0332 | Transmission re-programming. ''D'' allows transmission to shift from 1st - 5th gear and ''Mode'' allows 6th gear overdrive. Requires overdrive option. | $691 |
| 1200-0345 | Eng/Trans Cummins X15 605HP with EVS4000 transmission. 2017 EPA Compliant. | $136,622 |
| 1225-0005 | Exhaust heat shield. Locate below compartment floor. | $190 |
| 1225-0006 | Exhaust tip stainless steel for Plymovent. For exhaust extraction system. | $358 |
| 1225-0007 | Exhaust Brake Silencer Donaldson Silent Partner | $973 |
| 1225-0008 | Wrap exhaust with heat tape from the turbo down to the flex pipe. Inspect after install for tears in material. Wrap outside with wire mesh to ensure material remains affixed. | $854 |
| 1225-0009 | Anchor plate for Nederman exhaust system. For use with standard nozzle. Ship Loose. | $267 |
| 1225-0012 | Ward No Smoke Exhaust System. | $17,793 |
| 1225-0013 | Tailpipe support. Locate between tailpipe and body approx 10" in from edge of body. | $540 |
| 1225-0014 | Exhaust driver side custom chassis. | $631 |
| 1225-0015 | Vertical exhaust officer side. This will include the vertical exhaust support. | $1,656 |
| 1225-0016 | Locate exhaust end between rear of compartment ahead of wheels and ahead of forward wheel well angle at approx. 45 degrees to rear. | $245 |
| 1225-0017 | Vertical exhaust elbow chrome plated 90 degree. Due to high heat from 2007 and later emission exhaust systems dis-coloring of exhaust end may occur after prolonged use. | $315 |
| 1225-0020 | Exhaust tip MagneGrip. For exhaust extraction system. Tip to protrude appox. 2" outside of body (Not rubrail). | $656 |
| 1225-0021 | Cover exhaust with blanket from the turbo down to the flex pipe (as applicable). Visually inspect after install for tears in material. | $303 |
| 1225-0024 | Plymovent Grabber magnetic exhaust end. Bolt-on for exhaust extraction system. | $438 |

| Item No. | Description | |
|---|---|---|
| 1225-0025 | Vertical exhaust officer side. This will include the vertical exhaust support. Locate to forward area of module (internal) with exhaust end being approx. 6" above ladders stowed on ladder rack. | $1,875 |
| 1225-0026 | Vertical exhaust rain cap chrome. | $91 |
| 1225-0031 | Wrap exhaust with heat tape from the turbo down to the muffler. Visually inspect after install for tears in material. Wrap outside with wire mesh to keep material from coming off. | $904 |
| 1225-0033 | Exhaust diverter. Diverts exhaust from officer side to driver side. Includes well labeled switch accessible to driver. | $5,484 |
| 1225-0035 | Exhaust end for Plymovent. For exhaust extraction system. Exhaust to be angled rearward to allow for possible deflection if impacted. | $487 |
| 1225-0039 | Modify the tailpipe to discharge straight out of a side panel located below R1 compartment but above the bottom edge of the body. Exhaust tip to be MagneGrip for exhaust extraction system. . | $987 |
| 1225-0042 | Firwin exhaust blanket from the turbo down to the DPF. Includes shield over DPF. | $722 |
| 1225-0043 | Exhaust end for Plymovent. For exhaust extraction system. Set back approx. 4" from exhaust end. Includes "Caution Hot" label above exhaust on side of body. | $297 |
| 1225-0048 | Exhaust outlet cooling tip. | $242 |
| 1225-0050 | Vertical exhaust stack pipe straight chrome plated with rain cap. Due to high heat from 2007 and later emission exhaust systems dis-coloring of exhaust end may occur after prolonged use. | $400 |
| 1225-0051 | Exhaust diverter. Diverts exhaust from officer side to vertical. Includes well labeled switch accessible to officer. | $5,484 |
| 1225-0052 | Vertical exhaust officer side through body forward of R2. This will include shortening the existing standard tailpipe and adding the vertical exhaust to standard lower exhaust piping from connection point below rear section of R1 forward of wheel in supplied body cavity. Exhaust stack shall be mounted to supplied body provisions and shall have aluminized piping from lower elbow as attached to existing tail pipe up to upper stack. The upper stack and rain bonnet flap shall be chrome and shall extend up through outer compartment top to available OAH per customer requirements or Approx. 15.50" to topmost bonnet point. The bonnet shall be positioned where it opens outward of the body to expell exhaust away from apparatus. | $1,112 |
| 1225-0053 | Firwin exhaust blanket from the turbo down to the DPF. | $873 |
| 1225-0054 | Locate exhaust end 3" below rubrail extending 2" past rubrail. | $245 |
| 1225-0057 | Nederman exhaust transmitter on cab dash. Wired through engine run. | $1,092 |
| 1225-0059 | Ward No Smoke 2 Exhaust System. | $17,793 |
| 1225-0060 | Exhaust end with fresh air vent for Plymovent exhaust extraction system. | $525 |
| 1225-0063 | Wrap exhaust with thermal insulation tape from the turbo down to the DPF (not including flex pipe if equipped). Includes S/S tie wraps. | $236 |
| 1250-0003 | Frame 10.25 x 3.5 x .375 chassis. | $5,672 |
| 1250-0006 | Frame liner 9.375 x 3.125 x .375. | $3,123 |
| 1250-0011 | Rear underbody support frame. | $596 |
| 1250-0013 | Main frame - 12.0x3.5x.375 with 11.125 liner and 10" step. Step frame - 10.25x3.5x.375 with 9.375 liner. | $21,707 |
| 1250-0015 | Frame assembly to include 176" wheelbase and 41" framecut. | $18,454 |
| 1250-0016 | Frame assembly to include 196" wheelbase and 41" framecut. | $18,454 |
| 1250-0017 | Frame assembly to include 210" wheelbase and 41" framecut. | $18,454 |
| 1250-0018 | Frame assembly to include 182" wheelbase and 47" framecut. | $18,454 |
| 1250-0019 | Frame assembly to include 202" wheelbase and 47" framecut. | $18,454 |
| 1250-0020 | Frame assembly to include 216" wheelbase and 47" framecut. | $18,454 |
| 1250-0022 | Frame assembly to include 212" wheelbase and 47" framecut. | $18,454 |
| 1250-0025 | Frame 12 x 3.5 x .375 chassis. | $5,672 |
| 1250-0057 | Rear underbody support frame. SS product. | $596 |
| 1250-0061 | Frame liner "L" 8.875 x 3.125 x .375. | $2,898 |
| 1250-0066 | Rear chassis subframe for 4x4. Raises bottom of chassis 9.375". For use with 12" frame rails and AxleTech 4000 or equivalent front axle only. | $2,860 |
| 1250-0067 | Chassis frame rails shall be zinc plated (galvanized) IPOS. Includes rear subframe rails (if applicable). | $2,038 |
| 1250-0068 | Chassis frame rails front frame extensions rear subframe (Urban Interface) crossmembers and battery brackets shall be zinc plated (galvanized) IPOS. | $4,926 |
| 1250-0070 | Chassis frame liner shall be zinc plated (galvanized) IPOS. | $522 |
| 1250-0074 | Rear underbody support frame with side tow eye style frame brackets without lower tow eyes to minimize impact on departure angle. To be used with frame mounted tow eyes facing rearward from frame rails. | $1,018 |
| 1250-0076 | Rear underbody support frame. Includes zinc plated (galvanized) IPOS. | $1,413 |
| 1250-0080 | Frame assembly with 10.25 x 3.5 x .375 powder coated galvanized rails. | $5,672 |
| 1250-0081 | Frame assembly with 12 x 3.5 x .375 powder coated galvanized rails. | $5,672 |
| 1250-0082 | Frame assembly with powder coated galvanized rails and 10" step for use with front drive axle. Includes 12 x 3.5 x .375 rails behind cab with 11.125 liner and 10.25 x 3.5 x .375 rails below cab with 9.375 liner. | $21,707 |

| Item No. | Description | |
|---|---|---|
| 1250-0083 | Frame liner 9.375 x 3.125 x .375 galvanized and powder coated. | $3,123 |
| 1250-0084 | Frame liner 11.125 x 3.125 x .375 galvanized and powder coated. | $3,475 |
| 1250-0085 | Front chassis frame extensions crossmembers and battery brackets shall be zinc plated (galvanized) IPOS. Includes rear subframe if applicable (urban interface straight frame 4x4 etc). | $2,888 |
| 1350-0001 | Dual fuel fill package. Additional fuel fill provided on officer side of unit. | $521 |
| 1350-0003 | Fuel system 50 gallon. | $1,552 |
| 1350-0005 | Fuel system 65 gallons. | $1,639 |
| 1350-0006 | Fuel system 100 gallons | $2,349 |
| 1350-0008 | Fuel water separator Fuel-Pro 382 (Cummins FH2309). Filter is top serviceable. | $710 |
| 1350-0009 | Fuel line hose braided. Includes fuel pick-up (if applicable). | $303 |
| 1350-0010 | Fuel pick-up for generator or pump. Includes hoses run to generator compartment. | $141 |
| 1350-0011 | Fuel pump electric w/re-prime. | $431 |
| 1350-0012 | Fuel shut-off valve. Location: [#LOC]. | $110 |
| 1350-0013 | Racor fuel/water separator to be a bottom drop out style. Shall include indicator light and audible alarm. | $750 |
| 1350-0014 | Thermal control in-line fuel heater. | $499 |
| 1350-0015 | Locking fuel cap (PR) ARFF. | $183 |
| 1350-0025 | Fuel line hose braided. Includes re-usable fittings on both ends of the hose. | $303 |
| 1350-0026 | Fuel Lines Wrapped in Thermal Loom | $894 |
| 1350-0027 | Fitch fuel catalyst drop in style | $820 |
| 1350-0028 | Additional Fuel Sender in tank. For future use only. No wiring. | $380 |
| 1350-0029 | Racor fuel separator. To allow fuel flow to primary or secondary (back-up) fuel separator. Control valve to be located in pump compartment access in walkway with labeling. Locate adjacent to primary Racor unit. | $1,169 |
| 1350-0037 | Fuel system w/65 gallon stainless steel tank. | $2,879 |
| 1350-0043 | Fuel system w/50 gallon stainless steel tank. | $2,646 |
| 1350-0046 | Fuel water separator Fuel-Pro 382 with light and alarm. Filter is top servicable. | $820 |
| 1350-0048 | Fuel system 100 gallons. Tank located above framerails to rear of cab. | $2,349 |
| 1350-0049 | Fuel system 85 gallons. Tank located above framerails to rear of cab. | $2,349 |
| 1350-0052 | Fuel system 75 gallons. | $1,994 |
| 1350-0053 | Racor model 4120R1230 fuel/water separator. | $834 |
| 1350-0054 | Fuel water separator Fuel-Pro 382 with light and alarm. Filter is top servicable. | $820 |
| 1350-0056 | Fuel system w/65 gallon tank below cab. HS chassis only. | $1,639 |
| 1350-0057 | Fuel line hose silicone. | $303 |
| 1350-0058 | Radiator mounted fuel cooler. | $493 |
| 1350-0059 | Fuel system w/65 gallon stainless steel tank below cab. HS chassis only. | $2,879 |
| 1350-0061 | Fuel system 70 gallons. | $1,994 |
| 1350-0064 | The exterior of the chassis fuel tank(s) shall be coated with LINE-X. | $484 |
| 1350-0065 | The exterior of the battery tray(s) shall be coated with LINE-X. Includes covers if equipped. | $484 |
| 1350-0067 | Fuel system w/50 gallon stainless steel tank. Includes taper rear. | $3,041 |
| 1350-0068 | Fuel drain valve in place of plug. | $110 |
| 1400-0002 | Battery four group 31 1000 CCA. | $1,028 |
| 1400-0003 | Battery six group 31 1000 CCA. | $1,537 |
| 1400-0010 | Battery six Delco 1150 Hi-Cycle 700 CCA. | $1,355 |
| 1400-0011 | Battery splash cover for ULC compliance. | $311 |
| 1400-0012 | Officer side front and middle batteries shall be Isolated for use with communication equipment only. The (2) batteries are not to be hooked up to the 12 Volt electric bus. Provide (3) 2AWG red cables and (1) 2AWG black cable from the location of the batteries through the officer side comm box to the driver comm box w/4ft of excess cable. | $847 |
| 1400-0013 | Battery four group 31 1000CCA. (3) batteries driver side (1) battery officer side w/ available space for additional (2) batteries on officer side. | $1,284 |
| 1400-0014 | Mount (3) 100A fuses (2) 40A fuses near officer batteries. 100A fuse to manual trip manual reset type. Wire (3) 2AWG red battery cables from comm box to 100A fuses. Provide jumpers from fuses to batteries. Wire 8AWG wires from comm box to 40A fuses. Route 2AWG cables into officer comm box under bottom shelf and up through inboard side of shelf. Route through wireway to driver side comm box. Leave 4ft of excess in comm box. | $406 |
| 1400-0019 | Special battery jumper stud location. Jumper studs to be located [#LOC]. | $365 |
| 1400-0020 | Relocate custom chassis batteries. Location: [#LOC]. | $1,088 |
| 1400-0023 | Battery six Delco 1110 Hi-Cycle 750CCA. | $1,355 |
| 1400-0024 | Jumper studs to be located below driver's side front corner of body (or pump module if equipped). Studs to face down with positive stud outboard. | $220 |
| 1400-0027 | Additional set of jumper studs. Location: Opposite standard location. | $374 |
| 1400-0028 | Battery six Optima model D31T 900CCA. | $3,582 |
| 1400-0031 | Stainless steel battery trays with stainless steel covers. | $1,531 |
| 1400-0032 | Battery five group 31 1000 CCA (two left / three right). For use with below cab DEF tank only. | $1,284 |

| Item No. | Description | |
|---|---|---|
| 1400-0033 | Heater pads for (4) Group 31 battery system. Wire pads to block heater receptacle. | $1,049 |
| 1400-0034 | Stainless steel battery trays. | $519 |
| 1400-0036 | Battery six group 31 1000CCA. Deka model 1231MF. | $1,779 |
| 1400-0037 | Battery rollout tray in body compartment R1. | $703 |
| 1400-0038 | Battery two 8D 1400 CCA. | $1,257 |
| 1400-0039 | Battery five Optima model D31T 900CCA. | $3,169 |
| 1400-0040 | Battery set additional two group 31 1000 CCA. Location: [#LOC]. | $570 |
| 1400-0042 | Jumper studs to be located below driver's side front corner of body (or pump module if equipped). Studs to face outboard. | $220 |
| 1400-0043 | Jumper studs to be located below driver's side front corner of body. Studs to face outboard. | $220 |
| 1400-0046 | Heater pads for (5) Group 31 battery system. Wire pads to winterization shoreline receptacle. | $1,208 |
| 1400-0047 | Battery six group 31 1000 CCA. For use with 67.5"/80" cab with 10G DEF under driver side of cab. | $2,384 |
| 1400-0048 | Battery five group 31 1000 CCA (two left / three right). | $1,284 |
| 1400-0049 | Battery six group 31 1000 CCA with post terminals. For use with 67.5"/80" cab with 10G DEF under driver side of cab. | $2,916 |
| 1400-0050 | (2) additional batteries located in R1 shall be Isolated for use with 24V winch. The (2) batteries are not to be hooked up to the 12 Volt electric bus. | $872 |
| 1400-0051 | (2) additional batteries located under the cab shall be Isolated for use with 24V winch. The (2) batteries are not to be hooked up to the 12 Volt electric bus. | $872 |
| 1400-0052 | Battery / Idle Mitigation System. Includes 200Ah power module (battery) on driver side and 300 Ah power module on officer side. For use with below cab DEF tank only. | $14,412 |
| 1400-0053 | Power module 500 Ah additional for Idle Mitigation System. Location: [#LOC] | $11,876 |
| 1400-0054 | Four(4) group 31 AGM 1150 CCA Odyssey PC-2150 batteries. | $2,939 |
| 1400-0055 | Battery four group 31 1000 CCA. One battery left side (with DEF) and three on right side. For use with 44.5" cab only. | $1,028 |
| 1400-0056 | Officer side front battery isolated for use with 12V accessory system. The battery is not to be hooked up to the 12 Volt electric bus. | $535 |
| 1400-0057 | Battery five group 31 760 CCA (two left / three right). For use with below cab DEF tank only. | $1,284 |
| 1400-0059 | Five (5) group 31 AGM 1150 CCA Odyssey PC-2150 batteries. (two left / three right). For use with below cab DEF tank only. | $3,672 |
| 1400-0060 | Battery five Delco 1110 Hi-Cycle 750CCA (two left / three right). For use with below cab DEF tank only. | $1,129 |
| 1510-0000 | Seat cavity cover (EA). | $180 |
| 1510-0035 | Universal air pack bottle bracket (EA). Location: [#LOC]. | $156 |
| 1510-0038 | Driver seat 911 air ride. | $960 |
| 1510-0039 | Driver seat to be 911 air ride with SCBA back | $1,140 |
| 1510-0040 | Officer seat to be 911 air ride | $960 |
| 1510-0041 | Officer seat 911 air ride SCBA. | $1,140 |
| 1510-0042 | Officer seat to be 911 fixed SCBA. | $932 |
| 1510-0043 | Driver seat to be Bostrom air ride. | $1,062 |
| 1510-0044 | Driver seat to be Bostrom air ride with SCBA back | $1,232 |
| 1510-0045 | Officer seat to be Bostrom air ride. | $1,062 |
| 1510-0046 | Officer seat to be Bostrom air ride SCBA. | $1,232 |
| 1510-0047 | Officer seat to be Bostrom fixed SCBA. | $1,032 |
| 1510-0048 | Driver seat to be 911 electric. | $1,431 |
| 1510-0049 | Driver seat to be Bostrom electric. | $1,530 |
| 1510-0050 | Rear facing 911 seat with SCBA driver's side. | $802 |
| 1510-0051 | Engine cover 911 one man bench with SCBA | $1,049 |
| 1510-0052 | Engine cover 911 two man bench with SCBA. | $1,771 |
| 1510-0053 | Rear facing 911 seat with SCBA officer's side. | $802 |
| 1510-0054 | Rear facing Bostrom seat with SCBA driver's side. | $772 |
| 1510-0055 | Engine cover Bostrom one man bench with SCBA | $1,078 |
| 1510-0056 | Engine cover Bostrom two man bench with SCBA. | $1,795 |
| 1510-0057 | Rear facing Bostrom seat with SCBA officer's side. | $772 |
| 1510-0058 | Fold down 911 seat located [#LOC] | $431 |
| 1510-0059 | Fold down 911SCBA seat located [#LOC]. | $950 |
| 1510-0060 | Fold down Bostrom seat located [#LOC]. | $431 |
| 1510-0061 | Fold down Bostrom SCBA seat located [#LOC]. | $894 |
| 1510-0062 | Two man bench centered on rear wall with 911 SCBA backs. Includes angled corners. | $1,366 |
| 1510-0063 | Two man bench centered on rear wall with Bostrom SCBA. Includes angled corners. | $1,684 |
| 1510-0064 | Four man bench centered on rear wall with 911 SCBA | $3,216 |
| 1510-0065 | Four man bench centered on rear wall with Bostrom SCBA. | $2,961 |
| 1510-0066 | One man bench centered on rear wall with 911 SCBA | $1,111 |
| 1510-0067 | One man bench centered on rear wall with Bostrom SCBA | $1,212 |
| 1510-0068 | Three 911 SCBA seats rear facing one outboard driver one outboard officer one centered. | $2,405 |

| Item No. | Description | |
|---|---|---|
| 1510-0069 | Three 911 SCBA seats rear facing one outboard driver one outboard officer one centered for top mount enclosed cab only. The outboard seats to be angled 30 degrees inward. | $2,405 |
| 1510-0070 | Three Bostrom SCBA seats rear facing one outboard driver one outboard officer one centered. For top mount enclosed cab only. | $2,581 |
| 1510-0071 | SEAT 911 3 RR FACING TME 30DEG | $2,581 |
| 1510-0076 | Bostrom SCBA seats forward facing center of rear wall (PR). Free standing with individual risers on rear wall. | $2,056 |
| 1510-0078 | Three individual forward facing 911 Imperial 1200 gray attendant seats with flip up bottom seat cushions. Bottom cushions to be large as possible. | $2,777 |
| 1510-0079 | Rear Seat Riser Storage. Includes smooth plate doors with push-button latches and 250lbs. slide out trays- (1) each side. Compartment opening to be 17" w x 10" h and transverse side to side. Riser to be Zolatone gray. | $2,739 |
| 1510-0080 | Officer seat to be 911 attendant. | $675 |
| 1510-0081 | Cab occupant detection seating system. Wired to visual indicator (hazard light). Includes audible alarm. Requires multiplex electrical system. | $4,713 |
| 1510-0082 | Zico Quic-Hold mechanical air pack bottle bracket for 5'' bottle (ea). Model MWAB with adjustable footplate and pull release strap. Location: [#LOC]. | $565 |
| 1510-0083 | 911 Attendant seat with individual riser (PR). Locate centered on rear wall. | $2,297 |
| 1510-0084 | Officer seat to be Bostrom electric | $1,530 |
| 1510-0085 | Custom logo embroidery (EA). Bostrom seats only. Requires set-up sales code. | $137 |
| 1510-0086 | Embroidery set-up for Bostrom cab seats. | $698 |
| 1510-0088 | 911 SCBA seats forward facing center of rear wall (PR). Free standing mtd on a common seat riser. | $2,148 |
| 1510-0089 | Tailbone pad for jump seat(s). (Reference print #634894) | $51 |
| 1510-0090 | One man bench (PR) on rear cab wall with Bostrom SCBA back. Location: driver and officer side outboard. | $1,687 |
| 1510-0091 | Zico Quic-Hold mechanical air pack bottle bracket (EA). Model QLM-U with adjustable footplate and pull release. Location: [#LOC]. | $684 |
| 1510-0092 | Two man bench centered on rear wall with bench seat style back cushion and angled riser corners. | $1,317 |
| 1510-0093 | Custom logo embroidery (EA). Seats Inc. seats only. Requires set-up sales code. | $152 |
| 1510-0094 | Embroidery set-up for Seats Inc. 911 cab seats. | $925 |
| 1510-0095 | Driver seat Bostrom electric with integral seat belt. | $1,703 |
| 1510-0096 | Officer seat Bostrom electric with SCBA back with integral seat belt. | $2,028 |
| 1510-0097 | Rear facing seat driver side Bostrom with SCBA back and integral seat belt. | $864 |
| 1510-0098 | Rear facing seat officer side Bostrom with SCBA back and integral seat belt. | $864 |
| 1510-0099 | Rear wall seat Bostrom flip-up with SCBA back and integral seat belt. Location: [#LOC]. | $1,198 |
| 1510-0100 | Padded headrest for fold down jump seat (EA). Not available with rear wall windows. | $126 |
| 1510-0101 | Driver and officer outboard rear facing seats mounted at 30 degree angle. Includes upper seat belt brkt. adjusted to rear of cab. | $498 |
| 1510-0104 | 911 SCBA seat forward facing center of rear wall. Free standing mtd on seat riser. | $1,076 |
| 1510-0105 | One man bench (PR) on rear cab wall with Seats 911 SCBA back. Location: driver and officer side outboard. | $1,369 |
| 1510-0106 | 911 SCBA seats forward facing rear wall (PR). Equally spaced with individual risers on rear wall. | $2,148 |
| 1510-0116 | Fold-down seat located [#LOC]. | $428 |
| 1510-0117 | Bostrom SecureAll mechanical air pack bottle bracket (EA). Location: [#LOC]. | $544 |
| 1510-0118 | Flip-up 911 SCBA seat located [#LOC]. | $977 |
| 1510-0119 | Flip up Bostrom SCBA seat located [#LOC]. | $1,009 |
| 1510-0120 | Flip up 911 attendant seat located [#LOC]. | $1,068 |
| 1510-0121 | Flip up Bostrom attendant seat located [#LOC]. | $1,188 |
| 1510-0122 | Fold down seat with 911 SCBA back located [#LOC]. | $953 |
| 1510-0123 | Fold down seat with Bostrom SCBA back located [#LOC]. | $968 |
| 1510-0124 | Officer seat fixed Bostrom with SCBA back and integral seat belt. | $1,001 |
| 1510-0126 | CrewGuard occupant seating detection system. Display location: [#LOC]. | $3,525 |
| 1510-0127 | Additional CrewGuard display. Location: [#LOC]. | $281 |
| 1510-0128 | FlameFighter air pack bottle bracket (EA). Model 17000 with adjustable footplate and push-button release. Location: [#LOC] | $548 |
| 1510-0129 | Two man bench centered on rear wall with Bostrom SCBA backs for use with ALS provision with side access only. Includes (1) horizontally hinged door on the front of the rear bench seat for access to storage below bench. | $2,128 |
| 1510-0130 | Flip up Bostrom ABTS attendant seat located [#LOC]. | $1,109 |
| 1510-0131 | Bostrom SecureAll mechanical air pack bottle bracket (EA) for bench / fold-down seat. Location: [#LOC]. | $667 |
| 1510-0133 | Adjust rear facing outboard seats as far inboard as appicable next to engine cover. | $121 |
| 1510-0134 | Rear wall seat Bostrom air ride Sierra non SCBA. Includes single riser. N/A with outboard rear wall seats. Storage below seat N/A. Location: [#LOC]. | $1,407 |
| 1510-0135 | Arm rest installed on both sides of the seat. Location: [#LOC]. | $514 |

| Item No. | Description | |
|---|---|---|
| 1510-0136 | Center rear wall seats to be mounted approximately 5" apart. C2X/T2X only. | $244 |
| 1510-0137 | Bostrom SCBA seat forward facing center of rear wall. Free standing mtd on seat riser. | $1,086 |
| 1510-0138 | Two man bench centered on rear wall with (1) 911 SCBA back driver and (1) bench back cushion officer. | $1,200 |
| 1510-0144 | FlameFighter model 14000 air pack bottle bracket with model 39015 safety strap (EA). Location: [#LOC] | $235 |
| 1510-0146 | 911 AIR SCBA seats forward facing center of rear wall (PR). Free standing with individual risers on rear wall. | $3,084 |
| 1510-0147 | 911 SCBA seats forward facing rear wall (3). Equally spaced with common riser on rear wall. Extended cab with medium doors only. | $3,220 |
| 1510-0148 | Rear facing 911 attendant seat driver's side. | $675 |
| 1510-0149 | Rear facing 911 attendant seat officer's side. | $675 |
| 1510-0150 | Two man bench centered on rear wall with (1) Bostrom SCBA back officer and (1) bench back cushion driver. | $1,518 |
| 1510-0151 | Universal air pack bottle bracket installed (EA). | $156 |
| 1510-0153 | Bostrom SCBA seats forward facing center of rear wall (PR). Free standing mounted on a common seat riser. | $2,056 |
| 1510-0154 | Three man bench offset to driver on rear wall with Bostrom SCBA backs for use with ALS provision with officer side access only. Includes provision for rear heaters mounted below bench. | $2,670 |
| 1510-0155 | Bostrom SCBA seats forward facing rear wall (3). Equally spaced with common riser on rear wall. Extended cab with medium doors only. | $3,021 |
| 1510-0185 | Rear facing seat center rear engine cover Bostrom with SCBA back and integral seat belt. | $947 |
| 1510-0186 | Driver and officer outboard rear facing seats mounted at 10 degree inboard angle. | $498 |
| 1510-0200 | Department patch sewn on Bostrom seat (EA). Requires customer supplied department patch for each seat. | $109 |
| 1510-0203 | Bracket SCBA IMMI SmartDock Gen2 restraint system. Location: [#LOC]. | $506 |
| 1510-0204 | Officer seat to be 911 electric SCBA | $2,014 |
| 1510-0206 | Zico electric hands-free air pack bottle bracket (EA). Model QM-ELB with adjustable footplate. Bracket release will be activated with park brake. Location: [#LOC]. | $734 |
| 1510-0207 | Riser to be 13" in height. Vista cabs only. | $151 |
| 1510-0209 | Driver seat to be 911 attendant. Includes forward and aft adjustment. | $675 |
| 1510-0210 | Two man bench centered on rear wall with bench style back cushion for use with ALS provision with side access only. | $1,762 |
| 1510-0211 | Driver seat to be Bostrom air ride with integral seat belt. | $1,891 |
| 1510-0212 | Officer seat to be Bostrom SCBA air ride with integral seat belt. | $2,626 |
| 1510-0213 | Rear wall seat riser to be 16" in height. Vista cabs only. | $151 |
| 1510-0214 | Rear wall seat riser to be raised 4" in height. Includes 2" bench seat cushion thickness reduction for non-vista roofs. | $151 |
| 1510-0217 | Arm rest rear wall (PR). Located outboard of bench seat on seat support channel. | $433 |
| 1510-0226 | Officer seat to be Bostrom fixed attendant. | $653 |
| 1510-0228 | Three man bench center on rear wall with 911 SCBA backs. Includes provision for rear heaters mounted below bench (if equipped). | $2,954 |
| 1510-0229 | (2) Flip up Bostrom attendant seats with common riser located center on rear wall. | $2,372 |
| 1510-0233 | Three man bench center on rear wall with Bostrom SCBA backs. Includes provision for rear heaters mounted below bench (if equipped). | $2,670 |
| 1510-0235 | Two man bench centered on rear wall with Seats 911 SCBA backs for use with ALS provision. Includes recess for SCBA brackets in wall. | $3,134 |
| 1510-0238 | Bostrom SCBA seats with integral seat belt forward facing center of rear wall (PR). Free standing mounted on a common seat riser. | $2,241 |
| 1510-0240 | Driver officer and rear bench seat riser constructed of diamond plated IPOS (as equipped). Includes diamond plate overlay for rear facing seats. | $337 |
| 1510-0241 | Driver and officer's seat riser constructed of diamond plated IPOS (as equipped). | $122 |
| 1510-0243 | Two (2) Bostrom SCBA seat backs and a three (3) person bench (no center position). | $2,177 |
| 1510-0244 | Driver seat Bostrom electric with SCBA back with integral seat belt. | $2,028 |
| 1510-0248 | Seats Inc 911 SCBA seat forward facing rear wall center. For use with extended cab with side access ALS compartments. Includes pass-thru and rear heater provision (if equipped). | $1,100 |
| 1510-0249 | Two man bench centered on rear wall with Bostrom SCBA backs for use with ALS provision with side access only or interior side compartments. Includes provision for rear heaters mounted below bench. | $2,128 |
| 1510-0252 | Location modification of electric seat controls. The controls shall be relocated to the outboard side of the seat as mounted IPO standard location. | $217 |
| 1510-0253 | Bostrom SecureAll mechanical air pack bottle bracket (EA). SecureAll factory adjusted to accommodate carbon fiber bottle(s) in mounted location(s) as specified. Location: [#LOC]. | $544 |

| Item No. | Description | |
|---|---|---|
| 1510-0254 | Bostrom SecureAll mechanical air pack bottle bracket (EA) for bench / fold-down seat. SecureAll factory adjusted to accommodate carbon fiber bottle(s) in mounted location(s) as specified. Location: [#LOC]. | $667 |
| 1510-0256 | Two man bench centered on rear wall Non-SCBA seat backs. (1) Access door on each side/end of riser to store (1) SCBA bottle on each side of riser. | $1,656 |
| 1510-0257 | Rear facing and forward facng rear cab risers to be extended 2" in height. Vista cabs only. | $479 |
| 1510-0258 | Zico EZ-LOC mechanical air pack bottle bracket (EA). Model QM-EZL with adjustable top clamp and footplate with center pull release for Bostrom seat. Location: [#LOC]. | $602 |
| 1510-0259 | Driver and officer outboard rear facing seats mounted at 15 degree inboard angle. | $498 |
| 1510-0260 | Cargo net covers for sides of seat riser IPOS. | $171 |
| 1510-0261 | 911 Attendant seat (PR) on common riser. Locate centered on rear wall. | $2,297 |
| 1510-0263 | Two man bench centered on rear wall with 911 SCBA backs. Includes square corners. | $1,366 |
| 1510-0264 | Two man bench centered on rear wall with Bostrom SCBA. Includes square corners. | $1,684 |
| 1510-0265 | Department patch sewn on 911 seat (EA). Requires customer supplied department patch for each seat. | $109 |
| 1510-0267 | Two man bench centered on rear wall with Bostrom SCBA backs includes squared corners and separate seat bottoms spaced 6" from each other. | $1,803 |
| 1510-0268 | Rear facing seat center rear engine cover Bostrom flip-up with SCBA back and integral seat belt. | $1,198 |
| 1510-0270 | Seatbelt P-clips. Provide on all connector ends of seatbelts. | $194 |
| 1510-0272 | Driver seat to be Bostrom fixed SCBA. Includes fore and aft adjustment. | $1,124 |
| 1510-0273 | Four man bench centered on rear wall with (2) Bostrom SCBA inboard and attendant backs outboard. | $2,749 |
| 1510-0274 | Two man bench centered on rear wall with 911 SCBA backs for use with exterior side access only or interior side compartments. Includes provision for rear heaters mounted below bench. | $2,412 |
| 1510-0275 | Arm rest installed on the outboard side of the seat. Location: [#LOC]. | $259 |
| 1510-0276 | Face mask storage pouch for Bostom Tanker series SCBA seats (EA). | $92 |
| 1510-0277 | Driver outboard rear facing seat mounted at 10 degree inboard angle. | $250 |
| 1510-0278 | Two man bench centered on rear wall with bench style back cushion with 2" extra depth removable bottom cushion with cut-out under cushion and angle corners for use with ALS provision with side access only. | $2,631 |
| 1510-0279 | ReadyReach seat belt extender. Location: [#LOC]. | $85 |
| 1510-0280 | Rear facing seat driver side rear engine cover Bostrom with SCBA back and integral seat belt. | $947 |
| 1510-0281 | Driver seat 911Battalion air ride ABTS. | $2,262 |
| 1510-0282 | Officer seat 911 Battalion ABTS air ride SCBA. N/A with Roll-Tek or 4Front due to reduction in legroom caused by pre-tensioner. | $2,019 |
| 1510-0283 | Officer seat to be 911 Battalion ABTS fixed SCBA. | $1,052 |
| 1510-0284 | Rear facing 911 Battalion ABTS seat with SCBA driver's side. | $1,052 |
| 1510-0285 | Rear facing 911 Battalion ABTS seat with SCBA officer's side. | $1,052 |
| 1510-0286 | Two man bench centered on rear wall with 911 Battalion ABTS SCBA backs. Includes angled corners. | $2,124 |
| 1510-0287 | Two man bench centered on rear wall with 911 Battalion ABTS SCBA backs. Includes square corners. | $2,124 |
| 1510-0289 | Fold down seat with 911 Battalion ABTS SCBA back located [#LOC]. | $1,106 |
| 1510-0290 | Rear facing 911 Battalion ABTS seat with SCBA on engine cover. | $1,052 |
| 1510-0291 | Arm rest installed on the inboard side of the seat. Location: [#LOC]. | $259 |
| 1510-0292 | Flip-up 911 SCBA seats forward facing center of rear wall (PR). Free standing mtd on a common seat riser. | $1,955 |
| 1510-0306 | Driver seat USSC Valor air ride ABTS. | $2,403 |
| 1510-0307 | Officer seat USSC Valor ABTS fixed SCBA. Includes fore and aft slides. | $1,353 |
| 1510-0308 | Rear facing USSC Valor ABTS seat with SCBA driver's side. | $1,134 |
| 1510-0309 | Rear facing USSC Valor ABTS seat with SCBA officer's side. | $1,134 |
| 1510-0310 | Dynamic adjustable SCBA cavity (ea). Valor seats only. | $348 |
| 1510-0316 | Two man SCBA bench seat riser only with angled corners. No SCBA backs or bottom cushion. For lower storage only. | $1,175 |
| 1510-0317 | Zico EZ-LOC mechanical air pack bottle bracket (EA). Model QM-EZL-CPR with adjustable top clamp and adjustable footplate with center pull release for 911 seats. Location: [#LOC]. | $680 |
| 1510-0318 | Rear facing Bostrom seat fixed attendant officer's side. | $653 |
| 1510-0319 | (2) Flip up Bostrom SCBA seats with common riser located center on rear wall. | $2,487 |
| 1510-0320 | Rear facing USSC Valor ABTS seat with SCBA driver's side. Includes fore and aft slides. | $1,353 |
| 1510-0321 | Rear facing USSC Valor ABTS seat with SCBA officer's side. Includes fore and aft slides. | $1,391 |
| 1510-0322 | Flip-up USSC Valor ABTS seat with 90 deg SCBA back (PR) forward facing center of rear wall mounted on a common seat riser. Long cab with medium doors only. | $3,121 |
| 1510-0323 | Adjustable forward/aft seat track on officer seat. | $94 |
| 1510-0324 | Officer seat USSC Valor air ride ABTS SCBA. Includes fore and aft slides. | $2,257 |
| 1510-0325 | Flip-up USSC Valor ABTS seats forward facing center of rear wall mounted on a common seat riser. Includes (1) SCBA (driver side) and (1) non-SCBA (officer side) forward facing center of rear wall mounted on a common seat riser. | $3,374 |

| Item No. | Description | |
|---|---|---|
| 1510-0326 | Zico EZ-LOC mechanical air pack bottle bracket (EA). Model QM-EZL with adjustable top clamp and adjustable footplate with center pull release for Valor seats. Location: [#LOC]. | $662 |
| 1510-0327 | Custom logo embroidery (EA). Valor seats only. | $95 |
| 1510-0328 | Driver seat USSC Valor air ride. | $1,781 |
| 1510-0329 | Officer seat USSC Valor fixed SCBA. | $958 |
| 1510-0330 | Rear facing USSC Valor SCBA seat driver's side. | $1,037 |
| 1510-0331 | Rear facing USSC Valor SCBA seat officer's side. | $1,037 |
| 1510-0332 | Two man bench centered on rear wall with Valor SCBA backs. Includes angled corners. | $2,113 |
| 1510-0333 | Two man bench centered on rear wall with Valor SCBA backs. Includes square corners. | $2,252 |
| 1510-0335 | Fold down seat with Bostrom SCBA back and Bostrom bottom cushion. Not available at outboard position w/manual windows. Located [#LOC]. | $994 |
| 1510-0338 | Rear facing cab risers to be extended 3" in height. Vista cabs only. | $201 |
| 1510-0339 | Bostrom attendant seats with integral seat belt forward facing center of rear wall (PR). Free standing mounted on a common riser. | $2,241 |
| 1510-0340 | Officer seat USSC Valor ABTS fixed SCBA. | $1,134 |
| 1510-0343 | Flip-up USSC Valor ABTS seat with 90 deg SCBA back (3) forward facing equally spaced on rear wall mounted on a common seat riser. Long cab with medium doors only. | $4,511 |
| 1510-0344 | Driver seat USSC Valor air ride ABTS with R style back. | $2,403 |
| 1510-0345 | Officer seat USSC Valor air ride SCBA. | $1,852 |
| 1510-0346 | Zico model ULLH-EZO air pack bottle bracket (EA). Location: [#LOC]. | $310 |
| 1510-0347 | Rear walll 4 man seat riser. Includes 2 man bench centered on rear wall with Bostrom SCBA and outboard flip up Bostrom SCBA seat each side of bench. 80" C/A cabs only. | $3,701 |
| 1510-0349 | Fold-down rear wall seat with 12.25" long Bostrom bottom cushion. Includes E-ONE non-SCBA backrest. Seat located [#LOC]. | $876 |
| 1510-0350 | One man bench inboard driver side on rear wall with 911 SCBA. | $1,111 |
| 1510-0351 | (3) Flip up Bostrom SCBA seats with integral seat belt and common riser located evenly spaced on rear wall. | $3,732 |
| 1510-0352 | (2) individual Bostrom ABTS SCBA seats outboard on a common 60" wide riser. Includes provision for rear heaters mounted below bench (if equipped). | $2,481 |
| 1510-0353 | Driver seat Bostrom electric with integral dual retractor seat belt. | $2,037 |
| 1510-0354 | Officer seat fixed Bostrom 550 with SCBA back and integral dual retractor seat belt. | $1,198 |
| 1510-0355 | Rear facing seat officer side Bostrom 550 with SCBA back and integral dual retractor seat belt. | $1,198 |
| 1510-0356 | Bostrom 550 SCBA seats with integral dual retractor seat belt forward facing center of rear wall (PR). Free standing mounted on a common seat riser. | $2,910 |
| 1510-0357 | Driver seat to be 911 Battalion electric ABTS. | $2,679 |
| 1510-0358 | Flip-up 911 Battalion ABTS SCBA seat located rear engine cover (PR). | $2,740 |
| 1510-0359 | Two man bench centered on rear wall with (1) 911 SCBA back center on rear wall. | $1,200 |
| 1510-0360 | Rear facing Bostrom seat fixed attendant driver's side. | $653 |
| 1510-0361 | Rear facing seat driver side Bostrom attendant with integral seat belt. | $944 |
| 1510-0362 | Rear facing seat officer side Bostrom attendant with integral seat belt. | $944 |
| 1510-0363 | Two (2) Bostrom SCBA seat backs on a three (3) person bench riser (no center position) with individual bottom cusions. | $2,177 |
| 1510-0364 | Officer seat fixed Bostrom attendent with integral seat belt. | $944 |
| 1510-0365 | Officer seat USSC Valor air ride. | $1,781 |
| 1510-0366 | Fold-down rear wall seat with Valor bottom cushion. Includes E-ONE non-SCBA backrest. Seat located [#LOC]. | $901 |
| 1510-0368 | Officer seat USSC Valor non-SCBA fixed with recline back. | $1,455 |
| 1510-0370 | Fold-down rear wall jump seat to be mounted 2.75" lower than std to provide additional headroom (EA). Non-SCBA seats only. (Not available with heaters mounted outboard on rear wall) | $189 |
| 1510-0372 | Fold-down rear wall seat with Valor bottom cushion. Includes E-ONE lumbar backrest. Seat located [#LOC]. | $901 |
| 1510-0373 | Officer seat USSC Valor ABTS fixed attendant. | $1,561 |
| 1510-0374 | Officer seat to be Bostrom electric SCBA. | $2,010 |
| 1510-0376 | Rear wall seat Bostrom 500CT flip-up with SCBA back and integral dual retractor seat belt. Location: [#LOC]. | $1,947 |
| 1510-0377 | Two man bench riser centered on rear wall with (1) Bostrom SCBA back officer with single bottom cushion. Driver side open for dealer/customer installed equiipment. | $1,326 |
| 1510-0378 | Rear wall seat Bostrom 500CT flip-up with SCBA back and integral dual retractor seat belt. Rear facing engine cover. | $1,947 |
| 1510-0379 | Officer seat Bostrom 550 electric with SCBA back with integral dual retractor seat belt. | $2,363 |
| 1510-0380 | Officer seat USSC Valor fixed SCBA with adjustable fore/aft track. | $1,177 |
| 1510-0381 | Rear facing USSC Valor SCBA seat driver's side with adjustable fore/aft track. | $1,256 |
| 1510-0382 | Rear facing USSC Valor SCBA seat officer's side with adjustable fore/aft track. | $1,256 |
| 1515-0006 | Air Conditioning filter kit | $269 |

| Item No. | Description | |
|---|---|---|
| 1515-0007 | Air conditioning for Typhoon only | $6,980 |
| 1515-0012 | Paint air conditioning condenser job color. | $815 |
| 1515-0017 | Air conditioning for the Typhoon X CII X and Quest with Cummins ISC/ISL engine and radiator mounted condenser. | $6,778 |
| 1515-0018 | Air conditioning for the Typhoon X CII X and Quest with roof top mounted condenser. | $7,916 |
| 1515-0020 | Well nut fasteners to attach A/C filter to overhead panel | $248 |
| 1515-0023 | A/C Cutoff Switch. Install switch in cab dash to turn off A/C in rear crew area. | $62 |
| 1515-0027 | Danhard cooling system for cab medical cabinet. 115v / 12v 13500 BTU wired to battery charger recept. Includes auto transfer switch and IOTA 75A converter mounted on permanent shelf above breaker box in L1 compt. Evaporator to be cabimet mtd condensor to be roof mtd and compressor to be frame mtd. Note: System draws up to 12 amps AC. | $6,261 |
| 1515-0028 | Danhard cooling system for cab medical cabinet. 115v / 12v 13500 BTU wired to battery charger recept. Includes auto transfer switch. Evaporator to be cabinet mtd and condensor to be roof mtd. Note: System draws up to 12 amps AC. | $6,064 |
| 1515-0029 | Air conditioning for the TyphoonX CII X and Quest with Cummins ISC or ISL roof top mounted condensor. | $7,916 |
| 1515-0031 | Roof mtd A/C system Penguin 13500 BTU. Locate on cab roof wired to shore power. Includes auto transfer switch. | $3,612 |
| 1515-0034 | Roof mtd A/C system Coleman 13500 BTU. Locate on rear cab roof wired to shore power and (if equipped w/auto transfer) generator. | $2,012 |
| 1515-0035 | Stainless steel pan for cab roof mounted A/C unit. Includes drain line to rear of cab. Drain not to drip on drivelines. | $657 |
| 1515-0036 | Danhard cooling system. 115v / 12v 13500 BTU wired to battery charger recept. Includes evaporator enclosure on ceiling centered rear of cab AC. Compressor located on rear engine cover with expanded metal cover painted to match cab interior. Condensor to be officer side roof mounted above canopy area. Note: System draws up to 12 amps AC. | $6,064 |
| 1515-0038 | Air hose routed from the compressor to the dryer shall be upgraded to include stainless steel mesh for the full length of hose. | $82 |
| 1515-0040 | Heating and air conditioning cab controls shall be located in the lower center dash panel between driver and officer. | $499 |
| 1515-0046 | Locate roof mounted AC condenser on [#LOC]. | $571 |
| 1515-0056 | Roof mtd A/C system Coleman Mach 8 15000 BTU. Locate on rear cab roof wired to shore power and (if equipped w/auto transfer) generator. | $3,212 |
| 1515-0062 | Roof mtd A/C system Penguin II 13500 BTU with 5600 BTU heat strips. Wire to shore power (includes auto transfer switch). Locate A/C Unit on cab roof. | $3,228 |
| 1515-0067 | Locate rear cab heaters outboard each side above seat support channel. | $381 |
| 1515-0069 | Heaters cab rear (PR) and front heater with heat to the feet for the driver and officer. Driver side rear wall w/cover only. | $1,609 |
| 1515-0070 | Air conditioning for HS cab with Cummins ISL engine. Includes center front cab evaporator and roof top mounted condenser. | $7,916 |
| 1515-0073 | Roof mtd A/C system Penguin II 13500 BTU. Wire to APU only. Locate A/C Unit on cab roof. | $3,228 |
| 1515-0076 | Heater rear cab w/o cover (EA) and front cab heater with heat to the feet for the driver and officer. Rear heater located under driver side of bench seat. | $1,184 |
| 1520-0000 | Cyclone II medium cab 58" CA | $56,964 |
| 1520-0001 | Cyclone II long cab 67.5" CA | $62,931 |
| 1520-0002 | Cyclone II extended cab 80" CA | $63,580 |
| 1520-0003 | Typhoon long cab 67.5" CA | $38,279 |
| 1520-0004 | Typhoon Medium cab 58" CA | $35,684 |
| 1520-0005 | Cyclone II medium cab three door with rear door on officer's side. | $56,964 |
| 1520-0006 | Cyclone II long cab three door with rear door on officer's side. | $62,931 |
| 1520-0008 | Cyclone II X medium cab with 58" CA | $54,923 |
| 1520-0009 | Cyclone II X short cab with 44.5" CA | $58,825 |
| 1520-0010 | Cyclone II X long cab with 67.5" CA | $60,891 |
| 1520-0011 | Cyclone II X extended cab with 80" CA | $61,540 |
| 1520-0012 | Typhoon X long cab with 67.5" CA | $36,236 |
| 1520-0013 | Typhoon X medium cab with 58" CA | $33,643 |
| 1520-0015 | Cyclone II X medium cab with ALS provision and 80" CA. Includes exterior hinged ALS doors approx 73" high. | $63,038 |
| 1520-0019 | Cyclone II X medium cab with ALS provision barrier style doors and 80" CA. Includes exterior hinged ALS doors approx 73" high. | $63,831 |
| 1520-0021 | Typhoon X long cab with 67.5" CA. Includes barrier style doors. | $37,033 |
| 1520-0022 | Cyclone II X medium cab with 58'' CA. Includes barrier style doors. | $55,716 |
| 1520-0023 | Cyclone II X long cab with 67.5" CA. Includes barrier style doors. | $61,687 |
| 1520-0024 | Cyclone II X extended cab with 80" CA. Includes barrier style doors. | $62,333 |
| 1520-0025 | Typhoon X medium cab with 58" CA. Includes barrier style doors. | $34,450 |

| Item No. | Description | |
|---|---|---|
| 1520-0029 | Typhoon X short cab with 44.5" CA | $37,547 |
| 1520-0030 | Cyclone II X Hush/Mid-Engine long cab with 67.5" C/A | $59,805 |
| 1520-0031 | Cyclone II X Hush/Mid-Engine medium cab with 58" C/A. | $53,838 |
| 1520-0032 | Cyclone II X Hush/Mid-Engine medium cab with 58" C/A. Includes barrier style doors. | $54,619 |
| 1520-0033 | Cyclone II X Hush/Mid-Engine long cab with 67.5" C/A. Includes barrier style doors. | $60,601 |
| 1520-0081 | Cyclone II X short cab with 44.5" CA and right hand drive. | $73,741 |
| 1520-0087 | Cyclone II X short cab 2 door with 44.5" ca. Includes transverse compartment at rear of cab above the front axle accessible from both sides. The compartment is approx 48.5" wide x 44.25" high x the width of the cab. | $58,825 |
| 1520-0090 | Cyclone II X (3) door extended cab with 80" CA. Officer side rear door. | $61,540 |
| 1520-0096 | Typhoon X extended cab with 80" CA | $40,260 |
| 1520-0097 | Typhoon X extended cab with 80" CA. Includes barrier style doors. | $41,057 |
| 1520-0104 | Cyclone II X (3) door extended cab with 80" CA. Includes barrier style doors. Locate rear door on Officer side of cab. | $63,578 |
| 1520-0106 | Quest medium cab with 58" CA. (QST2) | $67,262 |
| 1520-0110 | Quest long cab with 68" CA and barrier style doors. (QST2) | $74,027 |
| 1520-0111 | Quest extended cab with 80" CA and barrier style doors. (QST2) | $74,673 |
| 1520-0114 | Typhoon X medium cab with ALS provision barrier style doors and 80" CA. Includes exterior hinged ALS doors approx 73" high. | $42,555 |
| 1520-0116 | Quest medium cab with ALS provision barrier style doors and 80" CA (QST2). Includes exterior hinged ALS doors approx 73" high. | $76,172 |
| 1520-0118 | Quest HS medium cab with 58" CA. | $66,252 |
| 1520-0119 | Cyclone HS medium cab with 58" C/A. Includes barrier style doors. | $54,619 |
| 1520-0122 | Typhoon X medium cab with ALS provision and 80" CA. Includes exterior hinged ALS doors approx 73" high. | $41,762 |
| 1520-0125 | Cyclone HS medium cab with 58" C/A. | $53,825 |
| 1520-0126 | Cyclone HS long cab with 67.5" C/A. Includes barrier style doors. | $60,589 |
| 1520-0127 | Cyclone HS long cab with 67.5" C/A. | $59,794 |
| 1520-0128 | Quest HS medium cab with 58" CA and barrier style doors. | $67,045 |
| 1520-0129 | Quest HS long cab with 68" CA. | $72,220 |
| 1520-0130 | Quest HS long cab with 68" CA and barrier style doors. | $73,016 |
| 1520-0131 | Typhoon X short cab with 44.5" CA with barrier style doors. | $38,340 |
| 1520-0142 | Cyclone II X short cab 2 door with 44.5" ca with barrier style doors. Includes transverse compartment at rear of cab above the front axle accessible from both sides. The compartment is approx 35.5" wide x 36" high x the width of the cab. | $59,161 |
| 1535-0002 | Driver side cab wheel well medical cabinet approximately 42 x 22 (25 Quest) x 28. Includes external locking roll-up door and interior hinged door with locking push-button latch. Cabinet includes (2) adjustable shelves. | $2,092 |
| 1535-0003 | Officer side cab wheel well medical cabinet approximately 42 x 22 (25 Quest) x 28. Includes external locking roll-up door and interior hinged door with locking push-button latch. Cabinet includes (2) adjustable shelves. | $2,092 |
| 1535-0004 | Medical cabinet mounted on rear wall of cab 48 x 32 x 24 with a locking roll up door. Lower door opening raised to provide hand clearance. | $4,335 |
| 1535-0005 | Medical cabinet mounted on rear wall of cab 48 x 40 x 20 with locking roll up door. Lower door opening raised to provide hand clearance. | $4,076 |
| 1535-0006 | Medical cabinet mounted on rear wall of cab 55X32X19 with a locking roll up door. Lower door opening raised to provide hand clearance. | $2,780 |
| 1535-0007 | Medical cabinet mounted on rear wall of cab 55 x 40 x 20 with a locking roll up door. Lower door opening raised to provide hand clearance. | $3,467 |
| 1535-0012 | Medical cabinet mounted on the wheel well driver side of cab 45H x 21W x 24D with a locking roll-up door. | $2,602 |
| 1535-0013 | Medical cabinet mounted on the wheel well officer side of cab 45H x 21W x 24D with a locking roll-up door. | $2,602 |
| 1535-0028 | Cab medical storage cabinet(s) finish to be swirled with clear coating. | $1,239 |
| 1535-0030 | All roll-up medical cabinet doors selected on the cab to be ROM brand. | $137 |
| 1535-0031 | All medical cabinet RUD in the cab to be locking with J236 key | $142 |
| 1535-0032 | All medical cabinet RUD in the cab to be locking with 1250 key | $142 |
| 1535-0034 | All exterior access RUD for medical cabinets to be painted job color. Not available on two tone cabs. | $260 |
| 1535-0035 | Engine compartment light LED (EA). | $245 |
| 1535-0037 | Rear cab wall medical cabinet with side access doors (one each side). Cabinet to be 50" high x 38" wide x 24" deep. Includes (2) locking roll-up doors (satin finish) and (3) adjustable shelves. Lower door openings raised to provide hand clearance. | $3,157 |
| 1535-0038 | Interior medical cabinet. Locate to rear of engine cover. Cabinet to be 30" high x 38" wide x 20" deep with a locking roll up door. Includes (1) adjustable shelf. | $3,236 |

| Item No. | Description | |
|---|---|---|
| 1535-0043 | Medical cabinet mounted on rear wall of cab 48X32X24 with a locking roll up door and windows in door slats. Lower door opening raised to provide hand clearance. | $4,642 |
| 1535-0045 | ALS interior - Style ''A''. Includes forward wall with center locking roll-up door for access from int small compts up high ea side of ctr opening with glove box latch on driver's side compt and Medco keyed lock on officer's side strikers high and low on ALS doors access plts on int panel of ALS doors approx 5"W x 17"H x 70"L backboard sleeve two adj shelves ahead of backboard sleeve and a roll-out tray with 36" slides each side on floor. | $9,045 |
| 1535-0046 | Medical cabinet mounted on rear wall of cab 60X40X23 with a locking roll up door. Lower door opening raised 12" to provide area for rear heaters. Includes lower ventilation front access and removable sub-floor for additional access. | $3,289 |
| 1535-0047 | Medical cabinet mounted on the officer side rear cab wall 55(54 as required)X18X12 with a locking roll up door. Lower door opening raised to provide hand clearance. | $2,622 |
| 1535-0048 | Medical cabinet mounted on the driver side rear cab wall 55(54 as required)X18X12 with a locking roll up door. Lower door opening raised to provide hand clearance. | $2,622 |
| 1535-0049 | Louvers for interior medical/ ALS cabinet wall(s) to help cabinet contents to maintain cab interior temperatures. The louvers to be in four sets of three located two high and two low. Location: [#LOC]. | $182 |
| 1535-0051 | Compartment rear side of cab ''under riser'' type. Approx 22W x 30H opening. Includes double pan hinged door. Location: driver and officer side. | $1,202 |
| 1535-0052 | Medical cabinet mounted on rear wall of cab 52" x 40" x 23" with a locking roll up door. Lower door opening raised 4" to provide area for radio installation. Includes lower ventilation and removable sub-floor for additional access. | $3,289 |
| 1535-0054 | Exterior access roll up doors for medical cabinets to be painted upper cab color. | $260 |
| 1535-0057 | Driver side cab wheel well medical cabinet approximately 42 x 22 (25 Quest) x 28. Includes external locking pan door painted job color and interior hinged full height door with locking push-button latch. Cabinet includes (2) adjustable shelves. | $2,509 |
| 1535-0058 | Medical cabinet mounted on rear wall of cab 48X42X20 with angled corners and locking roll up door. Lower door opening raised to provide hand clearance. | $4,076 |
| 1535-0059 | Brace .75 x 2.75 below medical cabinet shelf | $90 |
| 1535-0060 | Rear cab wall medical cabinet with side access doors (one each side). Cabinet to be 62" high x 38" wide x 24" deep. Includes (2) locking roll-up doors (satin finish) and (3) adjustable shelves. Lower door openings raised to provide hand clearance. | $3,402 |
| 1535-0061 | Driver side cab wheel well medical cabinet approximately 42x22(25 Quest)x28. Includes external locking pan door painted job color and interior locking roll-up door with satin finish. Cabinet includes (2) adjustable shelves. | $2,753 |
| 1535-0062 | Interior medical cabinet. Locate to rear of engine cover. Cabinet to be 30" high x 38" wide x 20" deep with a locking roll up door. Includes (1) adjustable shelf and forward facing drop down door. | $3,330 |
| 1535-0063 | Officer side cab wheel well medical cabinet approximately 42x22(25 Quest)x28. Includes external locking single door painted job color and interior hinged door with locking push-button latch. Cabinet includes (2) adjustable shelves. | $2,509 |
| 1535-0064 | Rear cab wall medical cabinet with side access doors (one each side). Cabinet to be 48" high x 38" wide x 24" deep. Includes (2) locking roll-up doors (satin finish) and (3) adjustable shelves. Lower door openings raised to provide hand clearance. | $3,157 |
| 1535-0066 | Interior medical cabinet. Locate to lower rear of engine cover. Cabinet to be 32" high x 30" wide x 24" deep with single pan double bi-fold doors. Includes (1) vertical and (1) horizontal partition centered in the cabinet louvered lower side walls and removable lower rear facing panel for installation of heaters. | $3,269 |
| 1535-0067 | ALS - Side access. Includes compts on each side of cab access up high each side of interior outboard with glove box latches strikers high and low on ALS doors (CIIX/TyphoonX only) access plts on int panel of ALS doors (CIIX/TyphoonX only) extended cab floor and three adj shelves. | $3,609 |
| 1535-0068 | Rear wall medical cabinets. Includes forward wall and (2) full height equal width locking roll-up door compts with (3) shelves in each compt. | $9,890 |
| 1535-0069 | Rear cab wall medical cabinet with side access doors (one each side). Cabinet to be 50" high x 30" wide x 24" deep. Includes (2) locking roll-up doors (satin finish) and (3) adjustable shelves. Lower door openings raised to provide hand clearance. | $3,157 |
| 1535-0070 | Riser for medical cabinet. Lifts bottom of cabinet up to top of rear wall seat support. Front of riser to be closed sides to be open. CII X / Typhoon X only. | $727 |
| 1535-0071 | ALS interior - Style ''A''. Includes forward wall with center locking roll-up door for access from int small compts up high ea side of ctr opening with glove box latch on driver's side compt and Medco keyed lock on officer's side strikers high and low on ALS doors access plts on int panel of ALS doors approx 5"W x 17"H x 70"L backboard sleeve two adj shelves ahead of backboard sleeve and a roll-out tray with 36" slides each side on floor. HCFD. | $19,607 |

| Item No. | Description | |
|---|---|---|
| 1535-0072 | Rear cab wall medical cabinet with side diamond plate access doors (one each side) mounted above support channel on back wall. Cabinet to be 38" high x 47.25" wide x 14" deep. Includes diamond plate doors hinged to the rear with d-ring latches and (2) adjustable shelves. | $3,157 |
| 1535-0073 | Officer side cab wheel well medical cabinet approximately 42 x 22 (25 Quest) x 28. Includes external locking pan door painted job color and interior hinged full height door with locking push-button latch. Cabinet includes (2) adjustable shelves. | $2,509 |
| 1535-0074 | All medical cabinet RUD in the cab to be locking with CH751 key. | $142 |
| 1535-0075 | Driver side cab wheel well medical cabinet approximately 42x22(25 Quest)x28. Includes external locking roll-up door and interior hinged door with locking push-button latch. Cabinet includes (1) adjustable partition installed and (2) adjustable shelves shipped loose in the cabinet. | $2,208 |
| 1535-0076 | Driver side cab wheel well medical cabinet approximately 42x22(25 Quest)x28. Includes external pan door with locking Tri-Mark latch painted job color and interior full height hinged door with locking push-button latch. Cabinet includes (2) adjustable shelves. | $2,669 |
| 1535-0077 | Officer side cab wheel well medical cabinet approximately 42x22(25 Quest)x28. Includes external pan door with locking Tri-Mark latch painted job color and interior full height hinged door with locking push-button latch. Cabinet includes (2) adjustable shelves. | $2,669 |
| 1535-0078 | Interior medical cabinet. Locate to rear of engine cover. Cabinet to be 25.5" high x 30" wide x 23" deep with (2) drop down doors. | $1,079 |
| 1535-0079 | All roll-up medical cabinet doors selected on the cab to be Amdor brand. | $137 |
| 1535-0080 | Officer side cab wheel well medical cabinet approximately 42x22(25 Quest)x28. Includes external locking roll-up door. Cabinet includes (2) adjustable shelves. | $1,871 |
| 1535-0081 | Driver side cab wheel well medical cabinet approximately 42x22(25 Quest)x28. Includes external locking roll-up door. Cabinet includes (2) adjustable shelves. | $1,871 |
| 1535-0083 | Cabinet officer side behind officer seat with a Norcold DE-0740 refrigerator. Cabinet to include a garage style roll-up door (no lighting but wired to door ajar indicator). Wire refrigerator to operate thru shore line and during transit and on scene. | $3,864 |
| 1535-0084 | Full width cabinet along upper forward vista area of cab. To include two drop down doors with push-button latching. Two LED lights to be mounted in the upper area of the cabinet. Each door to wired to door adjar indicator. Final design to be discussed with customer | $3,588 |
| 1535-0085 | Rear cab wall medical cabinet with side access doors (one each side). Cabinet to be 36" high x 38" wide x 24" deep. Includes (2) roll-up doors (satin finish) and (2) adjustable shelves. Lower door openings raised to provide hand clearance. | $3,157 |
| 1535-0087 | Special medical cabinet on rear wall. Includes lower area ROM door with satin finish (front lower area raised 6")and lock (1) fixed shelf and (2) adjustable (above)-All with 1" lips all the way around upper area with drop down down with (2) non-locking push buttons lower sides open with cargo nets upper side officer with vertically hinged door with Medeco3 cam lock with (2) alike keys (each unit to be keyed differently). See full design in file. | $8,809 |
| 1535-0088 | Riser for medical cabinet. Approx 40"W x 20"D x 17"H. Front of riser to have a drop down door with two locking latches. Finish to match medical cabinet. | $945 |
| 1535-0089 | Full width cabinet along upper rearward vista area of cab. To include three (3) lift-up doors with push-button latching (hold-opens for each as size of door permits). Each opening to include one (1) ROM LED strip light mounted in the upper area of the cabinet. Each door to wired to door ajar indicator. | $3,588 |
| 1535-0091 | Officer side cab wheel well medical/communication cabinet approximately 42x22(25 Quest)x28. Includes external half height locking pan door with Tri-Mark latch painted job color and interior full height opening with cargo netting. Cabinet includes (3) adjustable interior pull-out shelves. | $3,300 |
| 1535-0092 | Driver side cab wheel well medical/communication cabinet approximately 42x22(25 Quest)x28. Includes external half height locking pan door with Tri-Mark latch painted job color and interior full height opening with cargo netting. Cabinet includes (3) adjustable interior (4) sided trays with 1" lips. | $3,300 |
| 1535-0093 | Compartment rear side of cab ''under riser'' type. Approx 22W x 30H opening. Includes double pan hinged door with Tri-Mark locking latches. Location: driver and officer side. | $1,362 |
| 1535-0094 | Driver side cab wheel well medical cabinet approximately 42x22(25 Quest)x28. Includes external pan door with locking Tri-Mark latch painted job color and interior full height opening with cargo net cover. Cabinet includes (2) adjustable shelves. | $2,836 |
| 1535-0095 | Officer side cab wheel well medical cabinet approximately 42x22(25 Quest)x28. Includes external pan door with locking Tri-Mark latch painted job color and interior full height opening with cargo net cover. Cabinet includes (2) adjustable shelves. | $2,836 |
| 1535-0096 | Exterior access roll up door for medical cabinet to be painted two-tone to match cab paint break (EA). | $443 |
| 1535-0097 | Medical cabinet mounted on the wheel well officer side of cab 15.5X24X21 with a vertically hinged door and locking push-button latch. | $1,038 |
| 1535-0098 | Upper forward vista area cabinet. Cabinet to be full width and height of vista area forward of rear cab doors. Includes (3) horizontal hinged lift-up doors. Outboard compartments to be approx. 12" wide. | $3,073 |

| Item No. | Description | |
|---|---|---|
| 1535-0099 | Upper rearward vista area cabinet. Cabinet to be full width and height of vista area rearward of rear cab doors. Includes (3) horizontally hinged lift-up doors. Outboard compartments to be approx. 12" wide. | $3,073 |
| 1535-0100 | Medical cabinet mounted on the driver side rear cab wall 55X28X12 with a locking roll up door. Lower door opening raised 12" to provide space for rear heater. Includes lower ventilation front access and removable sub-floor for additional access. | $2,964 |
| 1535-0101 | Medical cabinet mounted on the officer side rear cab wall 55X28X12 with a locking roll up door. Lower door opening raised 12" to provide space for rear heater. Includes lower ventilation front access and removable sub-floor for additional access. | $2,964 |
| 1535-0102 | Medical cabinet - ALS style side access. Includes compt on officer side of cab access up high on interior with glove box latch extended cab floor and three adj shelves. Includes pass-thru under bench seat riser if equipped. | $2,556 |
| 1535-0103 | Compartment rear side of cab ''under riser'' type. Approx 22W x 30H opening. Includes double pan hinged door. Location: driver side. | $1,202 |
| 1535-0104 | Medical cabinet mounted on the driver side rear cab wall with a locking roll up door. Cabinet to be approx 53H x 18W x 12D. Bottom of exterior opening just above rear seat channel. Includes 2 adj shelves in upper area false floor at top of seat channel and interior door below false floor. Interior door to be vert hinged on inboard side. | $3,726 |
| 1535-0105 | Medical cabinet mounted on the officer side rear cab wall 55(54 as required)X18X12 with a locking roll up door. Lower door opening raised approx. 12" to provide space for rear wall heaters. Includes slots and false floor. | $2,622 |
| 1535-0106 | Medical cabinet mounted on the driver side rear cab wall 55(54 as required)X18X12 with a locking roll up door. Lower door opening raised approx. 12" to provide space for rear wall heaters. Includes slots and false floor. | $2,622 |
| 1535-0109 | Compartment rear side of cab below floor. Approx 22W x 19.5H opening. Includes double pan hinged door with Tri-Mark latch. Location: driver and officer side. | $1,362 |
| 1535-0110 | Medical cabinet mounted on the driver side rear cab wall 55(54 as required)X20X22 with a locking satin finish roll-up door and (3) adjustable shelves. | $2,744 |
| 1535-0111 | Medical cabinet mounted on the officer side rear cab wall 55(54 as required)X20X22 with a locking satin finish roll-up door and equipment rack. | $2,744 |
| 1535-0112 | Officer side cab wheel well medical cabinet approximately 42x22(25 Quest)x28. Includes external locking pan door painted job color and interior locking roll-up door with satin finish. Cabinet includes (2) adjustable shelves. | $2,753 |
| 1535-0114 | Medical cabinet mounted on the wheel well driver side of cab 44HX21WX16D with a locking roll up door. | $2,525 |
| 1535-0115 | Special medical cabinet on rear wall. Includes lower side access only with (2) adjustable shelves with 1" lips all the way around (1) fixed shelf with 1" lips all the way around upper front area with drop down door with (2) non-locking push buttons lower sides open with cargo nets attached with clips in lieu of snaps upper side officer with vertically hinged door with Medeco3 cam lock with (2) alike keys (each unit to be keyed differently). See full design in file. | $8,257 |
| 1535-0118 | Medical cabinet mounted on rear wall of cab 50X38X12 with locking roll up door. Lower door opening raised to provide hand clearance. | $3,995 |
| 1535-0119 | Medical cabinet mounted on rear wall of cab 55X40X23 with a locking roll up door. Cabinet floor to be level with top of PTO box on cab floor. | $3,289 |
| 1535-0120 | Medical cabinet mounted on the officer side rear cab wall full height (as applicable)X 18W X 12D with a locking roll up door. For use with vista cabs only. Lower door opening raised to provide hand clearance. | $2,732 |
| 1535-0121 | Medical cabinet mounted on rear wall of cab full height (as applicable)X55X22 with locking roll up door. For use with vista cabs only. Lower door opening raised to provide hand clearance. | $4,407 |
| 1535-0122 | Medical cabinet mounted on the driver side rear cab wall full height (as applicable)X 18W X 12D with a locking roll up door. For use with vista cabs only. Lower door opening raised to provide hand clearance. | $2,732 |
| 1535-0123 | Full width cabinet along upper forward vista area of cab. To include three (3) lift-up doors with push-button latching (hold-opens for each as size of door permits). Each opening to include one (1) ROM LED strip light mounted in the upper area of the cabinet. Each door to wired to door ajar indicator. | $3,588 |
| 1535-0124 | Medical cabinet mounted on the driver side rear cab wall 55(54 as required)X20X22 with a locking satin finish roll-up door and (3) adjustable shelves. Includes lower area raised to accomodate rear wall heater. | $2,746 |
| 1535-0125 | Medical cabinet mounted on the officer side rear cab wall 55(54 as required)X20X22 with a locking satin finish roll-up door (1) adjustable shelvf and equipment rack. Includes lower area raised to accomodate rear wall heater. | $2,746 |
| 1535-0126 | Medical cabinet mounted on the wheel well driver side of cab 32H x 21W x 24D with a interior hinged full height door with locking push-button latch; hinged inboard. | $2,216 |

| Item No. | Description | |
|---|---|---|
| 1535-0127 | Louvers for rear wall bench seat riser to help cabinet contents to maintain cab interior temperatures. The louvers to be in three sets of three located low on forward wall. | $182 |
| 1535-0128 | ALS - Side access. Includes compts on each side of cab 16Wx20H access up high each side of interior outboard with locking glove box latches strikers high and low on ALS doors access plts on int panel of ALS doors extended cab floors smooth plate rear kick plates one adj shelf and nylatron floor overlay. Includes pass-thru under bench seat if equipped. | $3,609 |
| 1535-0129 | Reverse hinge driver and officer side ALS compartment door. Includes vertically mounted drip rail along forward area of compartment opening (as applicable)(in addition to the horizontal drip rail above the door opening; CIIX and TyphoonX cabs only). Doors to open approx. 110 degrees. | $156 |
| 1535-0130 | Driver side cab wheel well medical cabinet approximately 42 x 22 (25 Quest) x 28. Includes external locking roll-up door and interior hinged door with locking push-button latch; hinged outboard. Cabinet includes (2) adjustable shelves. | $2,092 |
| 1535-0131 | Driver side cab wheel well medical cabinet approximately 42 x 24 (27 Quest) x 28. Includes external locking roll-up door and interior hinged door with locking push-button latch. Cabinet includes (2) adjustable shelves. | $2,092 |
| 1535-0132 | Officer side cab wheel well medical cabinet approximately 42 x 24 (27 Quest) x 28. Includes external locking roll-up door and interior hinged door with locking push-button latch. Cabinet includes (2) adjustable shelves. | $2,092 |
| 1535-0133 | Cab medical/storage cabinet(s) interior finish to be Zolatone gray. | $374 |
| 1535-0134 | All roll-up medical cabinet doors selected on the cab to be Gortite brand. | $240 |
| 1535-0135 | Driver side cab wheel well medical cabinet approximately 42 x 22 (25 Quest) x 28. Includes external locking roll-up door and interior hinged smoked lexan door with locking push-button latch. Cabinet includes (2) adjustable shelves. | $2,148 |
| 1535-0136 | Rear cab wall medical cabinet with front and side access doors (one each side). Cabinet to be 42" high x 30" wide x 32" deep (do not notch for support bracket; customer to store backboard(s) above support channel behind cabinet; install mounting bracket above cabinet). Includes (1) locking lower horizontally hinged plate door on front located below roll-up door drums (2) locking side roll-up doors (satin finish) and (2) adjustable shelves. Lower door openings raised to provide hand clearance. | $3,489 |
| 1535-0137 | Medical cabinet mounted on the wheel well driver side of cab 45H x 21W x 24D with a locking roll-back (bread box) door. | $2,602 |
| 1535-0138 | Lock box mounted in the driver side wheel well medical cabinet floor. 14X21X20 with a locking horizontally hinged door. Finish will match interior of cab. | $613 |
| 1535-0139 | ALS interior with backboard and stokes basket storage. Includes forward wall with (2) outboard locking roll-up doors for access from int (3) compts up high with glove box latches strikers high and low on ALS doors access plts on int panel of ALS doors (2) approx 5"W x 17"H x 70"L backboard sleeves and stokes basket storage below backboard sleeves on floor. | $9,817 |
| 1535-0140 | Medical cabinet mounted on the officer side rear cab wall 55(54 as required)X18X12 with a locking full height door hinged inboard. | $2,401 |
| 1535-0141 | Medical cabinet mounted on the driver side rear cab wall 55(54 as required)X18X12 with a locking full height door hinged inboard. | $2,401 |
| 1535-0143 | Lock box mounted on top of the rear wall medical cabinet. 14HX18WX12D with a locking horizontally hinged drop down door. Finish will match interior of cab. | $613 |
| 1535-0145 | ALS - Side access. Includes compts on each side of cab strikers high and low on exterior doors access plts on int panel of exterior doors full height satin finish Amdor roll-up doors on interior extended cab floor and three adj shelves. | $5,292 |
| 1535-0146 | Upper rearward vista area cabinet. Cabinet to be between full height exterior ALS style cabinets and the same height of vista area. Includes (1) horizontally hinged lift-up door. | $2,063 |
| 1535-0147 | Officer side cab wheel well medical/communication cabinet approximately 42x22(25 Quest)x28. Includes external half height locking pan door with Tri-Mark latch painted job color and interior full height opening with cargo netting. Cabinet includes (1) adjustable shelf. | $3,142 |
| 1535-0148 | All medical cabinet RUD in the cab to be locking with GEM key lock | $142 |
| 1535-0149 | Officer side cab wheel well medical cabinet approximately 42x24x28. Includes external locking pan door painted job color and raised boxed interior locking roll-up door with satin finish for a 42" opening. Cabinet includes (2) adjustable shelves. Requires vista cab roof and removal of side windows. | $2,970 |
| 1535-0150 | Medical cabinet mounted on the wheel well officer side of cab 45H x 21W x 24D with a interior hinged full height door with locking push-button latch; hinged inboard. | $2,216 |
| 1535-0151 | Upper forward center vista area cabinet. Cabinet to be 40W x Vista Height x taper with vista deep. Includes horizontally hinged lift-up door. | $940 |
| 1535-0153 | Medical cabinet mounted on rear wall of cab 48 x 36 x 20 with a locking roll-back (bread box) door. | $4,076 |
| 1535-0154 | Medical cabinet mounted on the wheel well driver side of cab 45H x 21W x 24D with a interior hinged full height door with locking push-button latch; hinged inboard. | $2,216 |

| Item No. | Description | |
|---|---|---|
| 1535-0155 | Medical cabinet mounted on the wheel well driver side of cab 45H x 21W x 24D with a locking roll-up door and (2) adjustable shelves. | $2,602 |
| 1535-0156 | Medical cabinet rear engine cover bolted to forward facing map box approximately 34Wx25Hx18D. To include one (1) adjustable shelf. Two (2) vertically hinged swing out doors shall allow access (to the rear) the doors shall be raised 6" up from the cabinet's base. The cabinet shall include push-button latching (2) each door (1) top and (1) bottom. | $1,455 |
| 1535-0157 | ALS - Side access. Includes compts on each side of cab strikers high and low on exterior doors access plts on int panel of exterior doors satin finish ROM roll-up doors on interior (bottom raised to riser height) extended cab floor and three adj shelves | $5,509 |
| 1535-0158 | Locking interior medical cabinet plate door (PR). Key type to be 1250. | $156 |
| 1535-0159 | Medical cabinet mounted on the wheel well officer side of cab 22X21X28 with a vertically hinged door and locking push-button latch. | $1,038 |
| 1535-0160 | ALS - Side interior cabinets. Includes full height access doors (raised for heaters if equipped) each side of interior outboard with glove box latches and three adj shelves. | $3,609 |
| 1535-0161 | Compartment rear side of cab ''under riser'' type. Approx 22W x 30H opening. Includes double pan hinged door. For use with heaters below bench seat (No pass-through). Location: driver and officer side. | $1,202 |
| 1535-0162 | Officer side cab wheel well medical cabinet approximately 42 x 24 (25 Quest) x 28. Includes external locking roll-up door and interior cargo net access. Cabinet includes (2) adjustable shelves. | $2,147 |
| 1535-0163 | Driver side cab wheel well medical cabinet approximately 42 x 24 (25 Quest) x 28. Includes external locking roll-up door and interior cargo net access. Cabinet includes (2) adjustable shelves. | $2,147 |
| 1535-0164 | Compartment rear side of cab. Approx 8.75"W x 25"H opening. Includes a 3/16" smooth plate doors painted job color with quarter turn D-ring latch. Cut floor in cab to accommadate the height. Location: driver side. | $917 |
| 1535-0165 | Compartment rear side of cab. Approx 8.75"W x 25"H opening. Includes a 3/16" smooth plate doors painted job color with quarter turn D-ring latch. Cut floor in cab to accommadate the height. Location: officer side. | $917 |
| 1535-0166 | The bottom of the medical cabinet(s) within the cab shall have stainless steel trim at the bottom. This kick plate trim shall be 4" in height from the floor and shall be trimmed as required for door opening(s) below 4". | $420 |
| 1535-0167 | Compartment rear side of cab below floor. Approx 9W x 19.5H opening. Includes double pan hinged doors. Long cab with medium door location only. Location: driver and officer side. | $962 |
| 1535-0169 | Medical cabinet mounted on rear wall of cab 55X38X16 with a locking roll up door. Lower door opening raised to provide hand clearance. | $3,289 |
| 1535-0170 | Cab compartment - (1) each side rear of front wheels and below the cab transverse compartment. Approx 18 wide x 10.75 tall. To have an aluminum door with D-Ring (non-locking) slam latch hinged to the front. Door design must seal the compartment to secure and protect medical equipment. | $1,362 |
| 1535-0172 | Rear cab wall medical cabinet to be 50" high x 38" wide x 24" deep. Includes (1) forward facing locking roll-up door (satin finish) and (3) adjustable shelves. Lower door openings raised to provide hand clearance. | $3,157 |
| 1535-0173 | ALS - Side access. Includes compartments on each side of cab strikers high and low on exterior doors. Includes access plates on interior panel of exterior doors satin finish ROM roll-up doors on interior (bottom raised to riser height) extended cab floor and three adjustable shelves. Cabinet Includes transverse riser with backboard storage. The interior riser jets/protrudes forward between side wall ALS cabinets to allow heaters (if so equipped) not interfere or impede upon transverse storage/ pass-thru of backboards and other equipment stored under the riser in the transverse storage area. | $5,919 |
| 1535-0174 | ALS door locks - electric. Electric lock for hinged ALS doors. Wire to same electric lock system as other cab doors. | $970 |
| 1535-0175 | Medical cabinet mounted on rear wall of cab 49 x 40 x 25.5. Side access lower section with cargo net and notch upper forward access with discrete compartment. Includes drop down door. | $3,537 |
| 1535-0176 | Medical cabinet mounted on rear wall of cab approximately 48 x 38 x 20 with locking roll up door. Lower door opening raised to provide hand clearance. Required with rear outboard fold down seat(s). | $4,076 |
| 1535-0177 | Compartment rear side of cab ''under riser'' type. Approx 9W x 30H opening. Includes double pan hinged door and pass through to bench if equipped. Long cab with medium door location only. Location: driver and officer side. | $962 |
| 1535-0178 | Compartment rear side of cab below floor. Approx 22W x 21H opening. Includes double pan hinged door. Location: driver and officer side. | $1,202 |
| 1535-0181 | Upper rearward center vista area cabinet. Cabinet to be 48W x Vista Height x 12D. Includes horizontally hinged lift-up door. | $940 |

| Item No. | Description | |
|---|---|---|
| 1535-0182 | Officer side cab wheel well medical cabinet approximately 42 x 24 (27 Quest) x 28. Includes external locking roll-up door and interior cargo net access. Cabinet includes (2) adjustable shelves. | $2,147 |
| 1535-0183 | Driver side cab wheel well medical cabinet approximately 42 x 24 (27 Quest) x 28. Includes external locking roll-up door and interior cargo net access. Cabinet includes (2) adjustable shelves. | $2,147 |
| 1535-0184 | Medical cabinet mounted on rear wall of cab 55 x 38 x 20 with a locking roll up door. Lower door opening raised to provide hand clearance. | $3,467 |
| 1535-0185 | Two (2) compartments rear side of cab below floor (1) driver and (1) officer. Approx 22W x 19.5H opening. Each includes a double pan hinged door with a Tri-Mark latch. | $2,722 |
| 1535-0186 | Medical cabinet mounted on rear wall of cab 48 x 40 x 17 with locking roll up door. Lower door opening raised to provide hand clearance. | $4,076 |
| 1535-0187 | Driver side cab wheel well medical cabinet approximately 42 x 24 (25 Quest) x 28. Includes external locking roll-up door and interior hinged door with locking push-button latch. Cabinet includes (2) adjustable shelves. | $2,092 |
| 1535-0188 | Officer side cab wheel well medical cabinet approximately 42 x 24 (25 Quest) x 28. Includes external locking roll-up door and interior hinged door with locking push-button latch. Cabinet includes (2) adjustable shelves. | $2,092 |
| 1535-0190 | All shelves within the medical cabinet(s) shall have the a full perimeter lip IPOS. | $64 |
| 1535-0191 | All exterior access RUD for medical cabinets to be painted [#COL]. | $260 |
| 1535-0192 | The interior medical cabinet shall include stainless steel trim on the vertical corner of the cabinet where the hinge is attached. The trim shall run full height of the cabinet on this corner. The trim shall be 1" x 1" to protect and dress off this single corner's edge. | $212 |
| 1535-0193 | Medical cabinet mounted on the wheel well officer side of cab 15.5X24X21 with rear facing cargo netting. | $1,038 |
| 1535-0194 | Driver side cab wheel well medical cabinet approximately 42 x 22 (25 Quest) x 28. Includes external locking roll-up door and interior hinged door with locking push-button latch. | $1,875 |
| 1535-0195 | Officer side cab wheel well medical cabinet approximately 42 x 22 (25 Quest) x 28. Includes external locking roll-up door and interior hinged door with locking push-button latch. | $1,875 |
| 1535-0196 | Interior medical cabinet. Locate to rear of engine cover. Cabinet to be 27" high x 38" wide x 20" deep with a locking roll up door. Includes (1) adjustable shelf and forward facing drop down door. | $3,330 |
| 1535-0197 | Driver side cab wheel well medical cabinet approximately 42x22(25 Quest)x28. Includes external lift-up pan door with locking Tri-Mark latch painted job color pull strap for door and interior full height opening with cargo net cover. Cabinet includes (2) adjustable shelves. | $3,197 |
| 1535-0198 | Officer side cab wheel well medical cabinet approximately 42x22(25 Quest)x28. Includes external lift-up pan door with locking Tri-Mark latch painted job color pull strap for door and interior full height opening with cargo net cover. Cabinet includes (2) adjustable shelves. | $3,197 |
| 1535-0199 | Officer side cab wheel well medical cabinet approximately 42x22(25 Quest)x28. Includes external locking pan door painted job color and interior cargo net. | $2,675 |
| 1535-0200 | Driver side cab wheel well medical cabinet approximately 42x22(25 Quest)x28. Includes external locking pan door painted job color and interior cargo net. | $2,675 |
| 1535-0205 | Medical cabinet centered on the rear wall of the cab to be 74" wide X 62" tall. The center section on the cabinet will be 22" deep X 25" wide. At the outside edges of the 25" wide section of the cabinet will angle back until it is 10" deep at the outer most point on both sides. The cabinet is to be split into 3 separate sections with each section having (2) adjustable shelves and a locking ROM roll-up doors. Lower door opening raised to provide hand clearance. | $7,391 |
| 1535-0206 | Additional medical cabinet shelf. Location: (2) driver and (2) officer side medical cabinets. | $152 |
| 1535-0208 | Driver side cab wheel well medical cabinet approximately 42x22(25 Quest)x28. Includes external locking pan door painted job color. | $2,233 |
| 1535-0209 | Upper forward vista area cabinet. Cabinet to be full width and height of vista area forward of rear cab doors. Includes (3) horizontally hinged Lexan lift-up doors. Outboard compartments to be approx. 12" wide. | $3,283 |
| 1535-0210 | Officer side cab wheel well medical cabinet approximately 42 x 22 (25 Quest) x 28. Includes external locking roll-up door no interior access. Cabinet includes (2) adjustable shelves. | $2,025 |
| 1535-0212 | Medical cabinet mounted on the officer side rear cab wall full height (as applicable)X 18W X 12D with a locking roll up door. For use with vista cabs only. Lower door opening raised to provide hand clearance. | $2,732 |
| 1535-0213 | Medical cabinet mounted on the driver side rear cab wall full height (as applicable)X 18W X 12D with a locking roll up door. For use with vista cabs only. Lower door opening raised to provide hand clearance. | $2,732 |
| 1535-0214 | Driver side cab wheel well medical cabinet approximately 42 x 22 (25 Quest) x 28. Includes external locking roll-up door (no interior door). | $1,860 |

| Item No. | Description | |
|---|---|---|
| 1535-0215 | Rear cab wall medical cabinet with side access doors (one each side). Cabinet to be 50" high x 38" wide x 24" deep. Includes (2) locking roll-up doors (satin finish) and (2) adjustable shelves. Lower door openings raised to provide hand clearance. | $3,126 |
| 1535-0216 | Filler panel above medical cabinet (3) sided with finish to match other medical cabinet(s). This panel shall dress off the gap between the top of the cabinet and the ceiling. | $259 |
| 1535-0217 | Officer side cab wheel well medical cabinet approximately 42 x 24 (27 Quest) x 28. Includes external locking roll-up door no interior access. Cabinet includes (2) adjustable shelves. | $2,092 |
| 1535-0218 | Driver side cab wheel well medical cabinet approximately 42 x 24 (27 Quest) x 28. Includes external locking roll-up door no interior access. Cabinet includes (2) adjustable shelves. | $2,092 |
| 1535-0219 | Driver side cab wheel well medical cabinet approximately 42x22(25 Quest)x28. Includes external pan door with locking Tri-Mark latch painted job color and interior locking roll-up door with satin finish. Cabinet includes (2) adjustable shelves. | $2,753 |
| 1535-0220 | Officer side cab wheel well medical cabinet approximately 42x22(25 Quest)x28. Includes external pan door with locking Tri-Mark latch painted job color and interior locking roll-up door with satin finish. Cabinet includes (2) adjustable shelves. | $2,753 |
| 1535-0221 | Rear cab wall medical cabinet with side access on each side using black cargo netting. Cabinet to be 45" wide X 16"deep X full height (as applicable). Includes cabinet front access door using a smooth plate vertically hinged double door with thumb latches and (3) adjustable shelves. The cabinet will not be notched around rear wall channel. | $3,084 |
| 1535-0222 | Driver side cab wheel well medical cabinet approximately 42 x 22 (25 Quest) x 28. Includes external locking pan door painted job color. Cabinet includes (2) adjustable shelves. | $2,509 |
| 1535-0223 | Officer side cab wheel well medical cabinet approximately 42 x 22 (25 Quest) x 28. Includes external locking pan door painted job color. Cabinet includes (2) adjustable shelves. | $2,509 |
| 1535-0224 | Lock box mounted in the driver side wheel well medical cabinet floor. 8X21X20 with a locking horizontally hinged door. Finish will match interior of cab. | $613 |
| 1535-0225 | Special medical cabinet on rear wall. Includes lower side access only with (2) adjustable shelves with 1" lips all the way around upper front area with drop down door (approx. 12H x 35W opening) with (2) non-locking push buttons and louvers for compartment lower sides open with cargo nets attached with clips in lieu of snaps. | $3,236 |
| 1535-0226 | Rear cab wall medical cabinet with side access. Cabinet to be 32" high x 32" wide x 24" deep. Includes (2) black cargo nets and (1) adjustable shelf. | $2,256 |
| 1535-0227 | Additional medical cabinet shelf. Location: rear wall medical cabinet. | $152 |
| 1535-0228 | ALS side access with full height exterior doors. Includes strikers high and low on ALS doors access plts on int panel of ALS doors (2) horizontal backboard sleeves approx 12" above floor accessed from officer side (2) stair chair sleeves above backboards accessed from officer side and (2) stokes backets sleeves above stair chairs accessed from both sides. | $8,819 |
| 1535-0229 | Medical cabinet mounted on rear wall of cab 55 x 40 x 15 with a locking roll up door. Lower door opening raised to provide hand clearance. | $3,308 |
| 1535-0230 | Lock box in rear wall medical cabinet; floor mounted. 12H X FW X 12D with a locking horizontally hinged drop down door. Finish will match interior of cab. | $613 |
| 1535-0231 | Notch upper rear top of center rear wall medical cabinet for dealer installed equipment. Notch to be 6"H x 6"D x FW. | $468 |
| 1535-0232 | Reverse hinge driver and officer side exterior medical cabinet compartment door. Includes vertically mounted drip rail along forward area of compartment opening (as applicable) (in addition to the horizontal drip rail above the door opening). | $156 |
| 1535-0233 | Upper forward vista area cabinet. Cabinet to be full width and height of vista area forward of rear cab doors. Includes (3) horizontally hinged lift-up doors. Outboard compartments to be approx. 12" wide. Driver side compartment to include locking latch and partition wall. | $3,176 |
| 1535-0234 | Driver side cab wheel well medical cabinet approximately 42x22(25 Quest)x28. Includes external locking pan door painted job color. No shelves provided. | $2,233 |
| 1535-0235 | Upper forward vista area cabinet. Cabinet to be full width and height of vista area forward of rear cab doors. Includes (3) equally spaced compartments with driver and center cargo netting and officer lift-up door. | $3,073 |
| 1535-0236 | Compartment rear side of cab ''under riser'' type. Approx 9W x 30H opening. Includes single pan hinged door with 1/4 turn d-ring handles. Long cab with medium door location only. Location: driver and officer side. | $962 |
| 1535-0237 | Driver side cab wheel well medical cabinet approximately 28x22(25 Quest)x28. Includes external locking pan door painted job color. No shelves provided. | $2,233 |
| 1535-0238 | Special medical cabinet on rear wall. Includes lower side access only with (2) adjustable shelves with 1" lips all the way around (1) fixed shelf with 1" lips all the way around upper front area with drop down door with (2) non-locking push buttons lower sides open with cargo nets attached with clips in lieu of snaps upper side officer with vertically hinged door with non-locking push button latch. | $8,257 |

| Item No. | Description | |
|---|---|---|
| 1535-0239 | ALS side transverse access. Includes strikers high and low on ALS doors access plts on int panel of ALS doors (2) equally spaced vertical paritions up high for backboard sleeves/shovel/misc (1) floor mounted SlideMaster bi-directional tray and (1) transverse adjustable shelf between tray and upper storage. Includes extended floor(s). | $5,222 |
| 1535-0240 | Medical cabinet mounted on rear wall of cab full height (as applicable)X40X20 with locking roll up door. For use with vista cabs only. Lower door opening raised to provide hand clearance. | $4,407 |
| 1535-0242 | Driver side cab wheel well medical cabinet approximately 42 x 22 (25 Quest) x 28. Includes external locking pan door painted job color with Tri-Mark latch. Cabinet includes (1) adjustable shelf. | $2,484 |
| 1535-0243 | Officer side cab wheel well medical cabinet approximately 42 x 22 (25 Quest) x 28. Includes external locking pan door painted job color with Tri-Mark latch. Cabinet includes (1) adjustable shelf. | $2,484 |
| 1535-0244 | Compartment rear side of cab below floor. Approx 9W x 19.5H opening. Includes single pan hinged door with 1/4 turn d-ring handles. Long cab with medium door location only. Location: driver and officer side. | $962 |
| 1535-0245 | Upper forward vista area cabinet. Cabinet to be full width and height of vista area forward of rear cab doors. Includes (3) equally spaced compartments with horizontally hinged lift-up doors compartment dividers and center locking door latch. | $3,278 |
| 1535-0247 | Interior medical cabinet. Locate to rear of engine cover. Cabinet to be 22" H x 45" W x 20" D. Cabinet to be open rear with 1" lower lip and a cargo net style cover over rear opening. Inlcudes (1) adjustable shelf. | $1,237 |
| 1535-0248 | Interior medical cabinet. Locate to rear of engine cover. Cabinet to be 20.75" H x 45" W x 22" D. Cabinet to have a 2" lip around top open rear with 1" lower lip cargo net style cover over rear opening and (1) adj shelf. Interior to be DA finish. | $1,443 |
| 1535-0249 | Interior medical cabinet. Locate to rear of engine cover. Cabinet to be 32" high x 45" wide x 18" deep with sliding Lexan doors. Includes (1) adjustable shelf. | $3,133 |
| 1535-0250 | Officer side cab wheel well medical cabinet approximately 26 x 22 (25 Quest) x 28. Includes external locking pan door painted job color with Trimark exterior latch dual nader pins and interior hinged full height door with locking push-button latch. | $3,043 |
| 1535-0251 | Reverse hinge driver and officer side ALS compartment door. Doors to open approx. 110 degrees. For use with flush doors on QST2. | $288 |
| 1535-0254 | Rubber floor matting on interior of all medical cabinet floors. | $205 |
| 1535-0255 | Compartment rear side of cab ''under riser'' type. Approx 9W x 30H opening. Includes double pan hinged door. Long cab with medium door location only. Location: driver side. | $962 |
| 1535-0256 | Officer side cab wheel well medical cabinet approximately 42x22(25 Quest)x28. Includes external locking pan door painted job color and interior cargo net. Cabinet includes (2) adjustable shelves. | $2,836 |
| 1535-0257 | Driver side cab wheel well medical cabinet approximately 42x22(25 Quest)x28. Includes external locking pan door painted job color and interior cargo net. Cabinet includes (2) adjustable shelves. | $2,836 |
| 1535-0258 | Medical cabinet mounted on rear wall of cab 63X40X20 with a front locking roll up door sides open with cargo nets attached with clips in lieu of snaps and (2) adjustable shelves with 1" lips all the way around. Lower door opening raised 12" to provide area for rear heaters. Includes lower ventilation front access and removable sub-floor for additional access. | $3,958 |
| 1535-0259 | Officer side cab wheel well medical cabinet approximately 42 x 22 (25 Quest) x 28. Includes external locking pan door painted job color. Cabinet includes (1) adjustable roll-out tool board | $3,406 |
| 1535-0260 | Driver side cab wheel well medical cabinet approximately 42 x 22 (25 Quest) x 28. Includes external locking pan door painted job color. Cabinet includes (1) adjustable roll-out tool board | $3,406 |
| 1535-0261 | Upper forward vista area cabinet. Cabinet to be full width and height of vista area by approx 20" deep (at the bottom) located forward of rear cab doors. Includes (2) equally spaced compartments with horizontally hinged lift-up doors compartment divider and padding along lower rear edge. Cabinet shall match cab interior. | $3,278 |
| 1535-0263 | ALS - Side access. Includes compts on each side of cab with exterior locking roll-up doors extended cab floor and three adj shelves in each cabinet. | $5,292 |
| 1535-0264 | ALS - Side access. Includes compts on each side of cab strikers high and low on exterior doors access plts on int panel of exterior doors satin finish ROM roll-up doors on interior extended cab floor and three adj shelves. Includes pass-thru under bench seat (if equipped). | $5,509 |
| 1535-0265 | Medical cabinet mounted on rear wall of cab 55X44X20 with angled corners and locking roll up door. Lower door opening raised to provide hand clearance. | $4,076 |
| 1535-0266 | Compartment rear side of cab. Approx 22W x 60H opening. Includes double pan hinged door (3) adjustable upper shelves and (2) 8" diameter tubes recessed 4" in the floor (driver side only). Location: driver and officer side. | $2,571 |
| 1535-0267 | Upper forward vista area cabinet. Cabinet to be full width and height of vista area forward of rear cab doors. Includes (3) equally spaced compartments with driver/officer lift-up doors and center cargo netting. | $3,073 |

| Item No. | Description | |
|---|---|---|
| 1535-0268 | Officer side cab wheel well medical cabinet approximately 26 x 22 (25 Quest) x 28. Includes external locking pan door painted job color with Trimark exterior latch dual nader pins and interior hinged full height door hinged outboard with locking push-button latch. | $3,043 |
| 1535-0269 | Medical cabinet mounted on rear wall of cab 48 x 40 x 12 with locking roll up door. Lower door opening raised to provide hand clearance. | $4,076 |
| 1535-0270 | Officer side cab wheel well medical cabinet approximately 42x22(25 Quest)x28 divided into (2) areas. Includes half height external locking pan door painted job color and upper interior cargo net. Cabinet includes exterior access only for lower and interior access only for upper. | $2,836 |
| 1535-0271 | Driver side cab wheel well medical cabinet approximately 42x22(25 Quest)x28 divided into (2) areas. Includes half height external locking pan door painted job color and upper interior cargo net. Cabinet includes exterior access only for lower and interior access only for upper. | $2,836 |
| 1535-0272 | Medical cabinet mounted on rear wall of cab 50X36X14 with non-locking roll up door. Cabinet mounted at minimum 18" above floor with 3x3 forward post mounts. Vista cabs only. | $3,995 |
| 1535-0273 | Compartment dividers with rubber floor matting on interior of vista cabinet floor. | $257 |
| 1535-0275 | Medical cabinet mounted on rear wall of cab 55 (54 as required) x 30 x 20 with a locking roll up door. Lower door opening raised approx. 12" to provide space for rear wall heaters and notch for transverse riser. Includes louvers and false floor. | $3,911 |
| 1535-0276 | Medical cabinet mounted on rear wall of cab 40.5X36X16 with non-locking roll up door. Cabinet mounted at approx. 16" above floor with 3x3 forward post mounts. Includes (2) adjustable shelves. | $3,995 |
| 1535-0278 | ALS - Side access. Includes compts on each side of cab strikers high and low on ALS doors access plts on int panel of ALS doors with Tri-Mark latches extended cab floors smooth plate rear kick plates and two adj shelves. Includes pass-thru under bench seat if equipped. | $3,905 |
| 1535-0279 | Officer side cab wheel well medical cabinet approximately 26 x 22 (25 Quest) x 28. Includes external locking pan door painted job color with Trimark exterior latch and dual nader pins. No interior access. | $3,043 |
| 1535-0280 | Interior medical cabinet. Locate to rear of engine cover. Cabinet to be 26" H x 34" W x 14" D. Cabinet to be open rear with a sweep out floor and a cargo net style cover over rear opening. Inlcudes (1) adjustable shelf. | $1,237 |
| 1535-0281 | Upper forward vista area cabinet. Cabinet to be full width and height of vista area forward of rear cab doors. Includes (2) equally spaced compartments with horizontally hinged lift-up doors and compartment divider. | $3,278 |
| 1535-0282 | Rear cab wall medical cabinet with side access. Cabinet to be 50" high x 38" wide x 24" deep. Includes (2) black cargo nets and (3) adjustable shelves. | $2,718 |
| 1535-0283 | ALS - Side access. Includes compartments on each side of cab strikers high and low on exterior doors. Includes access plates on interior panel of exterior doors satin finish ROM roll-up doors with 23" wide opening on interior (bottom raised to riser height) extended cab floor and three adjustable shelves. Cabinet Includes transverse riser with backboard storage. The interior riser jets/protrudes forward between side wall ALS cabinets to allow heaters (if so equipped) not interfere or impede upon transverse storage/ pass-thru of backboards and other equipment stored under the riser in the transverse storage area. | $5,919 |
| 1535-0284 | Rear cab wall medical cabinet with side access doors (one each side). Cabinet to be 32" high x 38" wide x 24" deep. Includes (2) locking roll-up doors (satin finish) and (1) adjustable shelf front bolt-on access panel and 1"X1" angle on perimeter of top. Lower door openings raised to provide hand clearance. | $3,157 |
| 1535-0285 | Upper forward vista area cabinet. Cabinet to be full width and height of vista area forward of rear cab doors. Outboard officer side compartment to be approx. 12" wide; driver and center equally sized. Includes cargo netting over each opening. | $3,073 |
| 1535-0286 | Special medical cabinet on rear wall 64x40x20. Includes lower side access only with (2) adjustable shelves with 1" lips all the way around (1) fixed shelf with 1" lips all the way around upper full depth front area with drop down door with (2) non-locking push buttons lower sides open with cargo nets attached with clips in lieu of snaps. | $7,938 |
| 1535-0287 | Driver side cab wheel well medical cabinet approximately 42 x 24 (27 Quest) x 28. Includes external locking pan door painted job color and interior hinged full height door with locking push-button latch. Cabinet includes (2) adjustable shelves. | $2,608 |
| 1535-0288 | Officer side cab wheel well medical cabinet approximately 42 x 24 (27 Quest) x 28. Includes external locking pan door painted job color and interior hinged full height door with locking push-button latch. Cabinet includes (2) adjustable shelves. | $2,608 |
| 1535-0289 | Driver side cab wheel well medical cabinet approximately 32 x 22 (25 Quest) x 28. Includes external locking pan door painted job color. Cabinet includes (1) adjustable shelf. | $2,509 |
| 1535-0290 | Officer side cab wheel well medical cabinet approximately 32 x 22 (25 Quest) x 28. Includes external locking pan door painted job color. Cabinet includes (1) adjustable shelf. | $2,509 |
| 1535-0291 | Medical cabinet mounted on the wheel well officer side of cab 45H x 21W x 24D with a interior full height opening with cargo net restraint. | $2,216 |

| Item No. | Description | |
|---|---|---|
| 1535-0292 | Medical cabinet mounted on rear wall of cab 55 x 40 x 20 with a locking roll up door. Lower door opening raised 12" to provide area for rear heaters. Includes lower ventilation front access and removable sub-floor for additional access. | $3,467 |
| 1535-0294 | Compartment " L " shape rear side of cab ''under riser'' type. Compartment shall be L- shaped to maximize compartment space below the cab floor and around the cab latching hardware. Option requires the cab floor to be extended toward door opening. Below the cab floor the forward portion of the compartment shall be 14" deep and the aft portion shall be 22" deep. The door opening approx 22"W x 30"H. Includes: double pan hinged door White poly scuff pad added to the upper area of door pan for tray scuff protection. Location: driver and officer side. | $2,151 |
| 1535-0295 | Upper forward vista area cabinet. Cabinet to be full width and height of vista area forward of rear cab doors. Includes (3) horizontally hinged lift-up doors with non locking thumb action lever type latch's & moon spring hold open device. Outboard compartments to be approx. 20" wide. Center compartment to be hinged at roof line and approx 10 " tall. Below the center compartment a shelf shall be provided that spans between the outboard compartments. Cargo net with 1" web and 1" spacing shall be provided for the shelf area at the front of the opening permanently mounted along the ceiling and offer secured access with small plastic / composite buckles along the bottom. Below the outboard compartment a head bump pad shall be provided. Cargo net color: Black. Finish: Shall be consistent with the cab interior. | $3,807 |
| 1535-0297 | Polished stainless steel trim on bottom and vertical edge of riser height or below floor exterior cab compartment(s). | $155 |
| 1535-0298 | Interior medical cabinet. Locate to rear of engine cover. Cabinet to be 30" high x 38" wide x 20" deep with a non-locking roll up door. Includes (1) adjustable shelf. | $3,236 |
| 1535-0299 | Medical cabinet mounted on the wheel well driver side of cab 26H x 21W x 24D with an interior hinged full height door with locking d-ring. | $2,168 |
| 1535-0300 | Medical cabinet mounted on the wheel well officer side of cab 26H x 21W x 24D with an interior hinged full height door with locking d-ring. | $2,168 |
| 1535-0302 | Medical cabinet mounted on the wheel well officer side of cab 32H x 21W x 24D with a interior full height opening and cargo net restraint. | $2,216 |
| 1535-0303 | Medical cabinet mounted on rear wall of cab 48 x 40 x 20 with locking roll up door. Includes (2) adjustable shelves and a floor mounted roll-out tray. Lower door opening raised to provide hand clearance. | $4,759 |
| 1535-0304 | Special medical cabinet on rear wall. Includes lower side access only with (2) adjustable shelves with 1" lips all the way around upper front area with drop down door (approx. 12H x 35W opening) with (2) locking push buttons and louvers for compartment lower sides open with cargo nets (1" square openings) attached with clips in lieu of snaps. | $3,236 |
| 1535-0305 | Interior medical cabinet. Locate to rear of engine cover. Cabinet to be 30" high x 38" wide x 20" deep with single pan locking double doors. Includes (2) adjustable shelves. | $3,109 |
| 1535-0307 | Compartment rear side of cab (PR) without door for pump can storage. Compts to be approx 10.5" W x 30.5" H x 14" D. For use on 67.5" CII cab with med doors. | $3,268 |
| 1535-0308 | Cab medical/storage cabinet(s) finish to be Scorpion black. Includes interior/exterior of cabinet and shelves/trays if equipped. | $162 |
| 1535-0309 | Cabinet mounted on rear wall of cab 48 x 32 x 24 with a non-locking roll up door. Lower door opening raised 12"-14" to provide area for rear auxiliary component(s). Includes lower ventilation front access and removable sub-floor for additional access. | $4,335 |
| 1535-0311 | Officer side cab wheel well medical cabinet approximately 26 x 22 (25 Quest) x 28. Includes external locking pan door painted job color and interior cargo net. | $2,576 |
| 1535-0312 | Driver side cab wheel well medical cabinet approximately 26 x 22 (25 Quest) x 28. Includes external locking pan door painted job color and interior cargo net. | $2,576 |
| 1535-0313 | All roll-up medical cabinet doors selected on the cab to be Hansen brand. | $276 |
| 1535-0314 | Cabinet mounted on the officer side rear cab wall 55(54 as required)X18X12 with a non-locking roll up door. Lower door opening raised to provide hand clearance. | $2,622 |
| 1535-0315 | Cabinet mounted on the driver side rear cab wall 55(54 as required)X18X12 with a non-locking roll up door. Lower door opening raised to provide hand clearance. | $2,622 |
| 1535-0316 | LINE-X package: Bolt On Cab medical/storage cabinet(s) finish shall have LINE-X coating. Includes interior/exterior of cabinet and shelves/trays if equipped. Cabinets welded to the cab shall have the same finish as cab interior. | $514 |
| 1535-0317 | Medical cabinet mounted on the wheel well officer side of cab 42H x 21W x 24D with a locking roll-up door. | $2,602 |
| 1535-0319 | Driver side cab wheel well medical cabinet approximately 30 x 24 (27 Quest) x 28. Includes external locking pan door painted job color. No interior access. | $2,576 |
| 1535-0320 | Officer side cab wheel well medical cabinet approximately 30 x 24 (27 Quest) x 28. Includes external locking pan door painted job color. No interior access. | $2,484 |
| 1535-0321 | Reflective [#COL] 3M Diamond Grade striping positioned in the "A" formation located on the medical cabinet pan door panels. | $313 |

| Item No. | Description | |
|---|---|---|
| 1535-0322 | Interior medical cabinet. Locate to rear of engine cover facing aft. Cabinet to be 26" high x 34" wide x 14" deep. Includes: vertical single pan double doors locking push button lever type latches & (1) adjustable shelf. | $3,109 |
| 1535-0323 | Medical cabinet mounted on rear wall of cab 52X35X16 with a locking upper and lower drop down doors. Upper door opening approx. 13" tall with side ventilation. Lower opening to include (2) adjustable shelves. | $3,289 |
| 1535-0324 | Cabinet mounted on rear wall of cab 48 x 32 x 24 with a locking roll up door. Lower door opening raised 12"-14" to provide area for rear auxiliary component(s). Includes lower ventilation front access and removable sub-floor for additional access. | $4,335 |
| 1535-0326 | [#COL] Reflexite V98 striping positioned in the "A" formation located on the cab medical cabinet door panels. | $252 |
| 1535-0327 | Upper rearward split vista cabinet (PR). Cabinets to be full height and width of split vista rearward of rear cab doors. Includes (1) horizontally hinged lift-up door on each cabinet. | $2,063 |
| 1535-0328 | Driver side cab wheel well medical cabinet approximately 42x22(25 Quest)x28. Includes external locking pan door painted job color. No shelves provided; tracks only. | $2,336 |
| 1535-0329 | Medical cabinet mounted on the wheel well officer side of cab 45H x 21W x 18D(approx) with a locking roll-up door. | $2,602 |
| 1535-0330 | Medical cabinet mounted on the wheel well driver side of cab 45H x 21W x 18D(approx) with a locking roll-up door. | $2,602 |
| 1535-0331 | Medical cabinet mounted on officer side inboard of rear wall cab 52X20X20 with a locking roll up door facing officer side. Lower door opening raised to provide hand clearance. | $3,289 |
| 1535-0332 | Compartment rear side of cab. Approx 9W x 42H opening. Includes single pan hinged doors. Long cab with medium door location only. Location: driver and officer side. | $1,285 |
| 1535-0333 | Upper forward vista area cabinet. Cabinet to be full width and height of vista area forward of rear cab doors. Includes (3) horizontally hinged lift-up doors. Outboard compartments to be approx. 12" wide. Officer side compartment to include locking latch and partition wall. | $3,176 |
| 1535-0334 | LINE-X package: Cabinet(s) behind the rear cab door (non transverse) shall have LINE-X coating. Includes interior/exterior of cabinet and shelves/trays if equipped. | $514 |
| 1535-0335 | Cabinet mounted on rear wall of cab 48 x 32 x 20 with a locking roll up door. Lower door opening raised 12"-14" to provide area for rear auxiliary component(s). Includes lower ventilation front access and removable sub-floor for additional access. | $4,335 |
| 1535-0336 | Medical cabinet mounted on the wheel well officer side of cab 36H x 21W x 24D with a interior full height opening with cargo net restraint. | $2,216 |
| 1535-0337 | Interior medical cabinet. Locate to rear of engine cover. Cabinet to be 20.75" H x 45" W x 22" D. Cabinet to have a 2" lip around top open rear with 1" lower lip cargo net style cover over rear opening and (1) adj shelf. | $1,443 |
| 1535-0338 | Upper forward vista area cabinet. Cabinet to be full width and height of vista area by approx 20" deep (at the bottom) located forward of rear cab doors. Includes (2) equally spaced compartments with cargo netting compartment divider and padding along lower rear edge. Cabinet shall match cab interior. | $3,278 |
| 1535-0339 | Cabinet mounted on rear wall of cab 52 x 32 x 24 with a locking roll up door. Lower door opening raised 12"-14" to provide area for rear auxiliary component(s). Includes lower ventilation front access and removable sub-floor for additional access. | $4,527 |
| 1535-0340 | Rear cab wall medical cabinet with side access doors (one each side). Cabinet to be 50" high x 32" wide x 24" deep. Includes (2) locking roll-up doors (satin finish) and (3) adjustable shelves. Lower door openings raised to provide hand clearance. | $3,157 |
| 1535-0341 | Cabinet mounted on the wheel well driver side of cab 26H x 21W x 24D with an interior full height cargo net cover. | $2,168 |
| 1535-0342 | Cabinet mounted on the wheel well officer side of cab 26H x 21W x 24D with an interior full height cargo net cover. | $2,168 |
| 1535-0343 | Compartment rear side of cab. Approx 9W x full height opening. Includes single pan hinged door with dual d-rings. Long cab with medium door location only. Location: driver and officer side. | $1,808 |
| 1535-0344 | Medical cabinet mounted on the wheel well driver side of cab 45H x 21W x 24D with a interior full height opening with cargo net restraint. | $2,216 |
| 1535-0345 | Officer side cab wheel well medical cabinet approximately 26 x 22 (25 Quest) x 28. Includes external locking pan door with Tri-Mark exterior latch painted job color and interior cargo net. | $2,576 |
| 1535-0346 | Driver side cab wheel well medical cabinet approximately 26 x 22 (25 Quest) x 28. Includes external locking pan door with Tri-Mark exterior latch painted job color and interior cargo net. | $2,576 |
| 1535-0347 | Officer side cab wheel well medical cabinet approximately 42x22(25 Quest)x28. Includes external locking pan door painted job color. | $2,579 |
| 1535-0348 | Medical cabinet mounted on rear wall of cab 50" x 36" x 24" with a locking roll up door. Lower door opening raised approx. 12" - 14" to provide area for component installation. Includes lower ventilation and removable sub-floor for additional access. | $3,289 |
| 1535-0349 | Upper rearward vista area cabinet. Cabinet to be full width and height of vista area rearward of rear cab doors. Includes (2) horizontally hinged lift-up doors. | $3,073 |

| Item No. | Description | |
|---|---|---|
| 1535-0350 | Medical cabinet mounted on rear wall of cab full height x 38 x 24 with a locking roll up door. Lower door opening raised to provide hand clearance. | $4,335 |
| 1535-0351 | Medical cabinet mounted on the wheel well officer side of cab 45H x 21W x 24D with a interior full height opening cargo net restraint and no shelves. | $2,024 |
| 1535-0352 | Medical cabinet mounted on the wheel well driver side of cab 26H x 21W x 24D with interior cargo netting and (2) adj shelves. | $2,312 |
| 1535-0353 | Rear cab wall storage cabinet with side access doors (one each side). Cabinet to be 50" high x 32" wide x 24" deep. Includes (2) roll-up doors (satin finish) and (3) adjustable shelves. Lower door openings raised to provide hand clearance. | $3,157 |
| 1535-0354 | Non-standard cargo net restraints. Restraints to be [#LOC]. | $257 |
| 1535-0355 | Medical cabinet mounted on the officer side rear cab wall 55(54 as required)X20X22 with a locking satin finish roll-up door and (3) adjustable shelves. Includes lower area raised to accomodate rear wall heater. | $2,746 |
| 1535-0356 | Medical cabinet mounted on rear wall of cab 40 x 36 x 18 with locking roll up door. Lower door opening raised to provide hand clearance. | $4,076 |
| 1535-0357 | Interior medical cabinet. Locate to rear of engine cover. Cabinet to be 30" high x 38" wide x 20" deep with a locking roll up door. Includes forward facing drop down door. | $3,234 |
| 1535-0359 | Compartment rear side of cab contents. Transverse portion under rear cab riser shall include the following storage solution accessible from both side cab compartment doors: rearward shall be four (4) tubes for storage of broom handles. The open remaining area in the transverse forward of the handle tubes on both sides shall feature a vertical formed sanded finish aluminum .125 partition that will create a storage cubby 30in. deep from the edge of the cab inner sub-floor inboard into transverse accessible from either side cab compartment door. | $725 |
| 1535-0360 | ALS - Side access. Includes compts on each side of cab strikers high and low on ALS doors access plts on int panel of ALS doors extended cab floors smooth plate rear kick plates one adj shelf and nylatron floor overlay. Includes pass-thru under bench seat if equipped. | $3,609 |
| 1535-0361 | Medical cabinet mounted on rear wall of cab full height x 38 x 26 with a locking roll up door. Lower door opening raised to provide hand clearance. | $4,335 |
| 1535-0362 | ALS - Side access. Includes compts on each side of cab strikers high and low on exterior doors access plts on int panel of exterior doors satin finish ROM roll-up doors on interior and three adj shelves. Includes pass-thru under bench seat (if equipped). | $5,509 |
| 1535-0363 | Cargo net for inside compartment. Net to permanently fasten on rearward wall just inside the exterior door opening and fasten with buckle straps on forward wall just inside the exterior door opening. Cargo netting will be approximately 2" x 2" squares. Location: wheel well medical cabinet. | $830 |
| 1535-0364 | ALS - Side access. Includes compts on each side of cab with full height doors strikers high and low on ALS doors access plts on int panel of ALS doors with Tri-Mark D-Paddle latches extended cab floors smooth plate rear kick plates and two adj shelves. Includes pass-thru under bench seat if equipped. | $4,385 |
| 1535-0366 | Rear cab wall medical cabinet with side access doors (one each side). Cabinet to be 56" high x 38" wide x 24" deep. Includes (2) locking roll-up doors (satin finish) and (3) adjustable shelves. Lower door openings raised to provide hand clearance. | $3,260 |
| 1535-0368 | All interior access RUD for medical cabinets to be painted job color. | $260 |
| 1535-0369 | Rear cab wall medical cabinet with side access doors (one each side). Cabinet to be 56" high x 38" wide x 29" deep. Includes (2) locking roll-up doors (satin finish) and (2) adjustable shelves. Lower door openings raised to provide hand clearance. | $3,260 |
| 1535-0372 | Rear cab wall medical cabinet with side access doors (one each side). Cabinet to be 54" high x 38" wide x 29" deep. Includes (2) locking roll-up doors (satin finish) and (2) adjustable shelves. Lower door openings raised to provide hand clearance. | $3,260 |
| 1535-0373 | Cabinet mounted on rear wall of cab 55 x 40 x 20 with cargo net on forward opening. Includes clip restraints. | $3,467 |
| 1535-0374 | Driver side cab wheel well medical cabinet approximately 26 x 24 (27 Quest) x 28. Includes external locking pan door painted job color and interior cargo net. | $2,768 |
| 1535-0375 | Officer side cab wheel well medical cabinet approximately 42x24(27 Quest)x28. Includes external locking pan door painted job color and interior cargo net. Cabinet includes (1) adjustable shelf. | $3,028 |
| 1535-0376 | Medical cabinet mounted on rear wall of cab 62 x 38 x 20 with a locking roll up door. Lower door opening raised to provide hand clearance. | $3,467 |
| 1535-0377 | Interior medical cabinet. Locate to rear of engine cover. Cabinet to be 21" H x 45" W x 22" D. Cabinet to include a permanent shelf 4" from top side to side divider on shelf centered forward facing drop down door at shelf level and cargo net style cover over rear opening. Interior to be DA finish. | $1,923 |
| 1535-0378 | Medical cabinet mounted on the driver side rear cab wall FHX20X22 with a locking satin finish roll-up door and (3) adjustable shelves. Includes lower area raised to accomodate rear wall heater. | $2,870 |

| Item No. | Description | |
|---|---|---|
| 1535-0380 | Driver side cab wheel well medical cabinet approximately 42x22(25 Quest)x28. Includes external pan door painted job color(s) with black locking Tri-Mark latch and interior full height opening with cargo net cover. Cabinet includes (2) adjustable shelves. | $2,836 |
| 1535-0381 | Officer side cab wheel well medical cabinet approximately 42x22(25 Quest)x28. Includes external pan door painted job color(s) with black locking Tri-Mark latch and interior full height opening with cargo net cover. Cabinet includes (2) adjustable shelves. | $2,836 |
| 1535-0382 | Cabinet rear cab wall medical cabinet with front and side access doors (one each side). Cabinet to be 42" high x 30" wide x 32" deep (do not notch for support bracket; customer to store backboard(s) above support channel behind cabinet; install mounting bracket above cabinet). Includes (1) locking lower horizontally hinged plate door on front located below roll-up door drums (2) locking side roll-up doors (satin finish) and (2) adjustable shelves. Lower door openings raised to provide hand clearance. Interior of roll-up door storage areas to have cabinet floor raised 1/4" above floor mounted roll up door frame/sill to accommodate smooth & non-obstructed loading. | $4,283 |
| 1535-0383 | Officer side cab wheel well medical cabinet approximately 26 x 24 (27 Quest) x 28. Includes external locking pan door painted job color and interior cargo net. | $2,768 |
| 1535-0384 | Medical cabinet mounted on the wheel well officer side of cab 39H x 21W x 24D with a interior full height opening with cargo net restraint. | $2,216 |
| 1535-0385 | Interior medical cabinet. Locate to rear of engine cover. Cabinet to be 21" H x 45" W x 22" D. Cabinet to include a permanent shelf 4" from top side to side divider on shelf centered forward facing drop down door at shelf level (1) adjustable shelf in rear section and cargo net style cover over rear opening. Interior to be DA finish. | $2,134 |
| 1535-0386 | Upper forward vista area cabinet. Cabinet to be full width and height of vista area forward of rear cab doors. Includes cargo netting over each opening . Outboard compartments to be approx. 12" wide. | $3,073 |
| 1535-0387 | Driver side cab wheel well medical cabinet approximately 45 (interior) x 24 (27 Quest) x 28. Includes external locking pan door painted job color and interior hinged full height door with locking push-button latch. Cabinet includes (2) adjustable shelves. | $3,469 |
| 1535-0388 | Officer side cab wheel well medical cabinet approximately 45 (interior) x 24 (27 Quest) x 28. Includes external locking pan door painted job color and interior hinged full height door with locking push-button latch. Cabinet includes (2) adjustable shelves. | $3,469 |
| 1535-0389 | Driver side cab wheel well medical cabinet approximately 26 x 22 (25 Quest) x 28. Includes external locking pan door painted job color with Tri-Mark latch. No interior access. | $2,484 |
| 1535-0390 | Officer side cab wheel well medical cabinet approximately 26 x 22 (25 Quest) x 28. Includes external locking pan door painted job color with Tri-Mark latch. No interior access. | $2,484 |
| 1540-0001 | Map box dual storage | $570 |
| 1540-0005 | Map Box Rectangular Tall | $535 |
| 1540-0006 | Map box suspended with drop-down doors. | $588 |
| 1540-0007 | Map Box with Angle Storage. Angled side to face officer. | $507 |
| 1540-0008 | Map box suspended with officer's map storage. | $709 |
| 1540-0014 | All map boxes in the cab to be swirled with clear coat | $588 |
| 1540-0015 | Map box suspended with drop-down door. Box offset to rear to allow engine access door to open further. | $588 |
| 1540-0016 | Map box suspended with officer front drop down door with (4) slots and driver rear drop down door with (4) slots. | $698 |
| 1540-0017 | Map box with angled top on rear of engine cover. Includes lift up door with gas shock. | $581 |
| 1540-0018 | Map Suspended with Officer's Map Storage. (6) storage slots for 4" binders (1) additional storage slot for county custom map book. | $709 |
| 1540-0020 | Map box with 3 compartments on rear of engine cover. Forward compartment has angle lift-up door with gas shocks. Rear of box has top and rear compartments with hinged doors. | $1,188 |
| 1540-0021 | Map box suspended 34" wide with (3) drop down doors. | $698 |
| 1540-0023 | Map box suspended rear facing with drop down door. Box offset to rear to allow engine access door to open further. | $588 |
| 1540-0024 | Map / medical box on rear of engine cover. Front has 2 map boxes w/3 horz slots ea and drop down doors. Rear has 2 compts w/vert hinged doors. | $2,399 |
| 1540-0025 | Map box suspended with officer's map storage. | $709 |
| 1540-0026 | Locking map box door. Map box door to include a locking push-button latch. Key type to be CH751. | $83 |
| 1540-0027 | Map box suspended with officer front drop down door with (4) slots and driver rear drop down door with (2) slots. | $698 |
| 1540-0028 | Map box suspended with full width lower storage and officer's map storage. | $709 |
| 1540-0030 | Map Box Rectangular. Front storage area with hinged lid and push button latch to have (3) equal storage spaces. Center mounting area. Rear storage area with hinged lid and push button latch to have (2) equal storage spaces. | $507 |
| 1540-0031 | Map Box Suspended with Drop Down Door 17H x 34W x 14D. Box offset to rear to allow engine access door to open further. | $710 |

| Item No. | Description | |
|---|---|---|
| 1540-0032 | Map box suspended with driver's map storage. | $709 |
| 1540-0033 | Map Box located on rear of engine cover to be approx 45"L x 13.5" W x 11.5"D. | $1,392 |
| 1540-0034 | Map box suspended 37" wide with (3) drop down doors. | $698 |
| 1540-0035 | Rear engine cover rectangular map box 12H X 13.75W X 31L. Includes (3) slots driver open center (2) slots officer side and cargo net cover. | $979 |
| 1540-0036 | Storage box with hinged top with push-button latch. Box to be mounted to rear of engine cover and to rear of map box (hinge to forward edge). Size: 27" h x 34" w x 12" d | $452 |
| 1540-0037 | Map box suspended with drop-down doors 15" H x 37.5" W x 14" D with (4) slots each side. | $588 |
| 1540-0038 | Storage box with sliding aluminum plate doors. The doors to be secured with a tethered push-button ball pin fastener. Box to be mounted rear facing on rear of engine cover. Size: 27" H x 34" W x 12" D outside dimensions. | $1,350 |
| 1540-0039 | Map box / rear engine cover medical cabinet. Includes forward facing map box with 2 drop down doors and incorporated rear engine cover medical cabinet with roll-up door. | $4,521 |
| 1540-0040 | Map box suspended with drop down doors. 34"W x 10"H x 12"D | $588 |
| 1540-0041 | Map box OCFA. Located in the crew area between the wheel wells on the upper engine cover rear of the 3X3. | $1,036 |
| 1540-0042 | Map box suspended with driver and officer front drop down door and officer rear drop down door. Includes (4) slots on officer side and map storage on driver side. | $814 |
| 1540-0045 | Map box rectangular with rear hinged door. 11"L (front to rear) x 20"W (side to side) x 6"D. | $507 |
| 1540-0046 | Map box binder storage approx. 13"H x 11"W x 4" front to back. Location: (1) each side on interior wall of medical cabinet walls. Includes lid with mechanical latch. To match cab interior color. | $556 |
| 1540-0047 | Map box with 3 compartments on rear of engine cover. 2 compartments on top will be hinged back to back. Forward compartment has lift-up door with gas shocks. Rear of box has top and rear compartments with hinged doors. Lower compartment will be approx 7" high. | $1,188 |
| 1540-0049 | Map box suspended with drop down doors. Driver door approx. 15.5"W officer door approx. 19.5"W. 35"W x 11"H x 13.5"D. Includes (1) vertical partition 4" from officer side and (1) vertical partition 15.25" from driver side. Driver side and center sections to each have a horizontal shelf centered. | $588 |
| 1540-0051 | Map box suspended with drop-down doors. 34"W x 9.50"H x 12"D. | $588 |
| 1540-0052 | Auto Pulse storage box with hinged top and push-button latch. Box to be mounted on floor rear of engine cover (hinge to forward edge) angled same as lower engine cover. Size: 12"H x 44"W x 8"D(bottom)/11"D(upper). | $588 |
| 1540-0053 | Rear lower engine cover mounted storage box. To be approx. 44" W x 8" H x 12" D. Includes (3) equally spaced dividers. Includes cargo net cover. | $979 |
| 1540-0054 | Map box with two (2) compartments on rear of engine cover. Upper compartment to have lift-up door with one (1) hold-open and latch. Lower compartment to have drop down door with latch (accessible from the rear of the box). | $1,188 |
| 1540-0056 | Rear engine cover rectangular map box angled to match upper and lower vertical engine cover. 11"H X 12"W (front to rear) X 42.5"L. Includes (6) storage slots approx. 14"L x 6"W with (3) retaining straps front to rear (1) over each area. | $979 |
| 1540-0057 | Map box suspended with driver and officer front and rear drop down doors. Includes (4) slots on each side. | $814 |
| 1540-0060 | Storage box with hinged top with push-button latch. Box to be mounted to rear of engine cover and to rear of map box (hinge to forward edge). Size: 17H x 34W x 12D. | $452 |
| 1540-0063 | Map box suspended with (9) vertical slots. | $709 |
| 1540-0064 | Map box suspended with (9) vertical slots and (1) full width horizontal slot. | $814 |
| 1540-0065 | Map box suspended 37" wide with (3) drop down doors. | $807 |
| 1540-0066 | Map box suspended with officer's map storage. Includes (4) equal slots on officer side and (1) driver slot equal to top officer slot. | $709 |
| 1540-0068 | Storage box with hinged top with push-button latch. Box to be mounted on the forward engine cover (hinge to forward edge). Size: 6"H x 20"W x 11"D(front to rear). Includes partition approx. 5.75" from driver side. Box to match cab interior. | $452 |
| 1540-0069 | Map box suspended 34"W x 6"H x 12"D with driver and officer front and rear drop down doors. Includes (2) slots on each side. Locate just below AC. | $814 |
| 1540-0070 | Rear lower engine cover mounted storage box. To be approx. 44" W x 12" H x 12" D. Includes (1) center side to side divider with bungee cord cargo net cover. | $979 |
| 1540-0071 | Map box suspended with (1) drop down door. 14"W x 9.5"H x 12"D | $545 |
| 1540-0072 | Map Box with Angle Storage. Angled side to face officer. Includes single divider between angle storage and deep storage. Located on forward engine cover. | $507 |
| 1540-0073 | Map box suspended with drop-down doors and (1) shelf each side. 34"W x 9.50"H x 12"D. | $588 |
| 1540-0075 | Map box suspended with drop down doors. 34"W x 6"H x 13.5"D | $588 |
| 1540-0077 | Rear storage box on rear engine cover. Open box with forward hinged diamond plate lid and push-button latches. Box size shall be 44" wide X 12" deep X 8" high. | $588 |
| 1540-0079 | Map box suspended with drop-down doors. Approximately 34"W x 9.50"H x 13"D. | $805 |

| Item No. | Description | |
|---|---|---|
| 1540-0080 | Map box suspended with drop-down door installed on the rear of the box to provide accessibility from the rear. Box offset to rear to allow engine access door to open further. | $588 |
| 1540-0081 | Rear engine cover rectangular map box approximately 10"H X 14"W X 14"D. The depth shall have (2) dividers equally spaced. Open top with cargo net cover. | $452 |
| 1540-0082 | Map box suspended with drop-down doors. 34"W x 9.50"H x 12"D. (3) Slot officer's side open driver's side. | $588 |
| 1540-0083 | Map box rear facing. Lids only to be swirl plated with clear coat. Reference 581402. | $1,168 |
| 1540-0084 | Rear engine cover rectangular map box approximately 8.125"H (top to bottom) X 26"W (side to side) X 6.875"D (front to rear). The map box shall mount on the rear of the engine cover on the lower horizontal surface at rear. The depth (front to rear) shall have (1) divider going from side to side 2.5" from the rear to provide a front and rear compartment. The width (side to side) shall be divided equally going front to rear to provide (4) compartments. There shall be 3 open top radio boxes mounted to the rear lower of the map box. Each radio box will be 3.25" H X 3.25"W X 2.125" D. Radio boxes shall be mounted (2) 1" inboard each side and (1) centered at base of map box. Open top with cargo net cover. See layout in shop order file. | $616 |
| 1540-0085 | Map box suspended with drop-down doors and (1) shelf each side. Box offset to rear to allow engine access door to open further. | $588 |
| 1540-0086 | Map box suspended with rear facing sliding Lexan doors 15" H x 34" W x 12" D. Includes center partition and officer side shelf centered. | $710 |
| 1540-0087 | Map box suspended with officer's map storage with quarter latches. | $709 |
| 1540-0089 | Map box/radio cabinet suspended with drop-down doors 34x14x12. Includes louvers on officer side lower door side wall and floor. Box offset to rear to allow engine access door to open further. | $855 |
| 1540-0090 | Map box suspended with drop-down doors. Includes center vertical divider only. | $588 |
| 1540-0091 | Map box suspended with drop-down doors and (1) shelf each side. 24"W x 9.50"H x 12"D. | $588 |
| 1540-0092 | Map box binder storage approx. 13"H x 11"W x 4" front to back. Location: on interior facing wall of officer side medical cabinet offset as far forward as possible toward 3x3 post. Includes lid with mechanical latch. To match cab interior color. | $278 |
| 1540-0093 | Map box suspended with drop-down doors. Includes (1) adjustable shelf (no partition). Box offset to rear to allow engine access door to open further. | $588 |
| 1540-0094 | Map box suspended with rear facing drop-down doors and (1) shelf each side. 34"W x 9.50"H x 12"D. | $588 |
| 1540-0095 | Map box suspended with (1) drop-down door (1) full width 2" high upper shelf center lower vertical divider and (1) shelf each side of divider. 34"W x 9.50"H x 12"D. | $588 |
| 1540-0096 | Map box suspended with drop-down doors 15" H x 37.5" W x 14" D with (3) slots officer and (2) slots driver. | $588 |
| 1540-0098 | Map box suspended with driver and officer front drop down door and driver rear drop down door. Includes (3) slots on officer side and map storage on driver side. | $814 |
| 1540-0099 | Front center storage box between driver and officer seats 28"W x 47.5L" x 12.75" H. Includes double hinged lids personal item storage areas 2 cup holders and 6 map pockets. | $2,206 |
| 1540-0100 | Map box suspended with drop down doors. 34"W x 6"H x 13.5"D. (1) officer shelf only. | $588 |
| 1540-0102 | Map box suspended with drop-down doors. 37.5"W x 9.50"H x 12"D. (2) Slot officer's side open driver's side. | $588 |
| 1540-0103 | Map box suspended with drop down doors. 34"W x 6"H x 12.5"D. Includes full width upper shelf and lower vertical divider. | $696 |
| 1540-0104 | Map box suspended with drop-down doors 15" H x 37.5" W x 14" D with center divider. | $588 |
| 1540-0109 | Map box rectangular rear facing on rear engine cover. The compartment shall be flush with the rear edge of the engine cover. Size: 14D X 30T X 36W. Includes: full height vertical divider 18 inches from driver side one (1) adjustable shelf on the officer side of divider & a web cargo net with 2 inch square openings across the entire rear opening secured with small buckles on all sides. Construction is smooth aluminum with a match cab interior finish. | $1,214 |
| 1550-0001 | Map pockets cab front doors diamond plate | $192 |
| 1550-0002 | Map pockets cab front doors stainless steel. | $157 |
| 1550-0007 | All cab exterior access doors to have CH751 keyed locks. | $189 |
| 1550-0008 | Fixed rear cab wall windows (pr). Not available with side mount pump module applications. | $124 |
| 1550-0009 | Fixed rear cab wall narrow windows (pr). | $121 |
| 1550-0010 | Sliding rear cab wall windows (pr). Windows are drop style and not available with side mount pump module applications. | $276 |
| 1550-0013 | Driver and Officer door windows. Includes electric roll-down actuation. Each door to have individual control at door position and the driver door is to have master control for all power window locations. | $1,562 |
| 1550-0014 | Rear crew cab door windows. Includes electric roll-down actuation. Each door to have individual control. Not available with paddle style door latching. | $1,562 |
| 1550-0015 | Stainless steel protective trim on rear edge of cab door openings. E-ONE custom chassis only. | $239 |
| 1550-0017 | Cab door panels stainless steel. | $1,394 |

| Item No. | Description | |
|---|---|---|
| 1550-0018 | Scuff plates stainless steel (Set). Not available with paddle latches. | $111 |
| 1550-0019 | Windows cab side sliding driver side. | $281 |
| 1550-0022 | Cab roof vent with fan (pair). Each vent switched next to vent. Location: (1) each side centered above rear cab doors. | $853 |
| 1550-0023 | Windows rear sliding vista. Requires raised roof option | $464 |
| 1550-0024 | All cab doors shall have exterior paddle latches. | $651 |
| 1550-0029 | Map pockets cab rear doors diamond plate | $164 |
| 1550-0030 | Map pockets cab rear doors stainless steel. | $200 |
| 1550-0032 | Windows cab side sliding officer side. | $281 |
| 1550-0037 | (4) Incandescent cab step area lighting. Locate each light in [#LOC]. Lights to be switched with door ajar. | $164 |
| 1550-0038 | (4) LED cab step area lighting. Locate each light [#LOC]. Lights to be switched with door ajar. | $647 |
| 1550-0039 | Door mounted red incandescent flashing lights (4). Locate lights [#LOC]. Lights to be switched with door ajar. | $164 |
| 1550-0040 | Door mounted red LED flashing lights (4). Locate lights [#LOC]. Lights to be switched with door ajar. | $389 |
| 1550-0041 | Door mounted amber incandescent flashing lights (4). Locate lights [#LOC]. Lights to be switched with door ajar. | $164 |
| 1550-0042 | Door mounted amber LED flashing lights. Locate lights [#LOC]. Lights to be switched with door ajar. | $389 |
| 1550-0043 | All cab door kick plates to be made from smooth plate aluminum with DA finish. | $319 |
| 1550-0045 | All cab door kick plates to be made from stainless steel plate. | $667 |
| 1550-0046 | Canadian flag reflective material in place of striping for interior cab doors. | $96 |
| 1550-0047 | All (4) cab doors to have double strap. Straps to be sewn together. | $156 |
| 1550-0050 | All cab exterior cab locks to be keyed for #CH751 locks. Orange County. | $279 |
| 1550-0052 | Federal LED Delta Ray amber/red warning lights bottom of cab doors (interior) wired to door switches. | $1,926 |
| 1550-0053 | Aluminum interior rear cab door handrails (PR) IPOS. | $348 |
| 1550-0054 | All cab exterior access doors to have 1250 keyed locks. | $604 |
| 1550-0055 | Door mounted Whelen 500 series red TIR6 LED flashing lights (4) w/clear lenses. Locate lights [#LOC]. Lights to be switched with door ajar. | $1,299 |
| 1550-0061 | Rear crew cab door window. Includes electric roll-down actuation. Not available with paddle style door latching. For use with 3 door cab only. | $784 |
| 1550-0063 | (3) LED cab step area lighting. Locate each light in [#LOC]. Lights to be switched with door ajar. | $486 |
| 1550-0066 | Cab door kickplates fastened with screws. | $248 |
| 1550-0067 | [#COL] chevron "V" stripe on lower cab door panel approx 18" high. Stainless steel door panels only. CIIX and TyphoonX only. | $308 |
| 1550-0069 | Reflective [#COL] 3M Diamond Grade striping positioned in the "A" formation located on the cab door panels. | $313 |
| 1550-0070 | All (4) cab doors to have double door straps. Straps to be long enough to allow the door to open to a max of 90 degrees. | $309 |
| 1550-0071 | ABS cab door panels and lower kick panels to be fastened with screws. No drive rivets. | $412 |
| 1550-0072 | Cab door panels aluminum painted Zolatone gray. | $1,394 |
| 1550-0073 | [#COL] chevron "A" printed stripe on lower cab door panel approx 18" high. Stainless steel/painted door panels only. CIIX and TyphoonX only. | $308 |
| 1550-0074 | [#COL] chevron "A" stripe on entire lower cab door kick plate. Stainless steel or smooth plate kick plates only. CIIX and TyphoonX only. | $308 |
| 1550-0075 | Door mounted red LED flashing lights (3). Locate lights [#LOC]. Lights to be switched with door ajar. | $293 |
| 1550-0078 | Map pockets 14 gauge stainless steel. Includes vinyl trim around top of opening and nylon strap with snap to retain contents. Location: front cab doors. | $422 |
| 1550-0079 | Guard rubrail with endcaps for cab door strip lights. | $410 |
| 1550-0080 | [#COL] chevron "A" printed stripe on lower cab door panel approx 12" high. Stainless steel door panels only. CIIX and TyphoonX only. | $308 |
| 1550-0081 | Cab door locks - electric. Includes driver side exterior touchpad (2) remote key fobs barrel style key lock on exterior of each door and manual interior lock on each door. | $1,240 |
| 1550-0085 | All cab exterior access doors to have J236 keyed locks. | $604 |
| 1550-0086 | Door mounted red LED flashing lights (2). Locate lights [#LOC]. Lights to be switched with door ajar. | $196 |
| 1550-0087 | [#COL] Diamond Grade chevron "A" stripe on lower cab door panel approx 12" high. Stainless steel/painted door panels only. TyphoonX CIIX and QST2 only. | $511 |
| 1550-0088 | [#COL] chevron 2" "A" stripe on lower cab door panel approx 12" high. Stainless steel door panels only. CIIX and TyphoonX only. | $308 |
| 1550-0096 | Door mounted Whelen amber M6AC LED flashing lights (4) w/clear lenses. Lights to alternate flash top and bottom on each light. Locate lights [#LOC]. Lights to be switched with door ajar. | $1,393 |

| Item No. | Description | |
|---|---|---|
| 1550-0097 | Nader pin guards on front cab doors. | $141 |
| 1550-0099 | Scuff plates stainless steel (Set). Approx. 7"x7" to encompass door handle and lock. Not available with paddle latches. | $240 |
| 1550-0100 | Polished stainless steel protective trim on rear edge of cab door openings. E-ONE custom chassis only. | $265 |
| 1550-0101 | Polished stainless steel scuff plates for exterior cab door handles (set). Not available with paddle latches. | $115 |
| 1550-0102 | Rear crew cab door windows with rear fixed panel. Includes electric roll-down actuation. Each door to have individual controls. For use with paddle style door latching. | $1,752 |
| 1550-0103 | Rear crew cab door windows with rear fixed panel. Includes manual roll-down actuation. For use with paddle style door latching. | $189 |
| 1550-0106 | [#COL] chevron "A" stripe on lower cab door panel approx 24" high. Stainless steel door panels only. CIIX and TyphoonX only. | $308 |
| 1550-0107 | [#COL] chevron "A" stripe on lower cab door panel approx 6" high. Stainless steel door panels only. CIIX and TyphoonX only. | $220 |
| 1550-0108 | Stainless steel protective trim on rear edge of rear cab door openings. E-ONE custom chassis only. | $120 |
| 1550-0109 | [#COL] Diamond Grade chevron "A" stripe on lower cab door panel approx 18" high. Stainless steel/painted door panels only. TyphoonX CIIX and QST2 only. | $511 |
| 1550-0114 | Map pockets cab front doors aluminum plate painted Zolatone gray. | $180 |
| 1550-0115 | Map pockets cab rear doors aluminum plate painted Zolatone gray. | $180 |
| 1550-0116 | Cab door locks - electric; 2DR cab only. Includes driver side exterior touchpad (2) remote key fobs barrel style key lock on exterior of each door and manual interior lock on each door. | $959 |
| 1550-0117 | Scuff plates stainless steel (PR) door lock. For use with paddle latches. | $58 |
| 1550-0120 | Door panels cab alum painted Zolatone black. | $1,394 |
| 1550-0121 | Cab door strap one (1) additional to standard straps shall be provided. Location: One (1) each cab door. | $151 |
| 1550-0127 | Door mounted Whelen M4RC LED flashing lights (4) w/clear lenses. Locate lights [#LOC]. Lights to be switched with door ajar. | $1,278 |
| 1550-0128 | (4) Whelen LED cab step area lighting. Locate each light [#LOC]. Lights to be switched with door ajar. | $839 |
| 1550-0129 | Enclosures for electric door window actuation switch(s) shall be stream lined (1) switch behind another (not side by side) mounted in an enclosure to match the door's interior IPOS. Each door to be individually controlled. The driver shall have control for all electrically actuated windows. | $246 |
| 1550-0130 | Stainless steel protective trim on rear edge of rear ALS cab door openings. E-ONE custom chassis only. | $120 |
| 1550-0131 | Removable access panel on each cab door to the regulator and latch. | $526 |
| 1550-0132 | Driver and Officer door windows. Includes electric roll-down actuation. Each window to be individually controlled at each door. Each window switch will be flush mounted as far forward on the door as possible with minimal or no switch mounting protrusion. The driver side will NOT have controls for all electrically actuated windows but rather a single switch for the driver door window only. | $1,780 |
| 1550-0134 | Polished stainless steel trim on bottom edge of the over wheel cab compartment opening (ea). | $37 |
| 1550-0135 | Stainless steel trim on the vertical edge of the over wheel cab compartment opening (ea). | $51 |
| 1550-0136 | Polished stainless steel trim on the vertical edge of the over wheel cab compartment opening (ea). | $67 |
| 1550-0137 | A removable access panel shall be incorporated into the interior cover panel(s) of each cab door to permit easy access to the latch mechanism. | $526 |
| 1550-0138 | Door mounted Whelen M2 red super LED flashing lights (4). Locate lights on each cab door in the outboard position. Each individual light shall be activated by the corresponding cab door ajar circuit. | $1,142 |
| 1550-0139 | Each cab door shall have stainless steel trim on the trailing edge of the door to include forward door wheel well (radius) area. E-ONE custom chassis only. | $411 |
| 1550-0140 | Reflective [#COL] 3M Diamond Grade striping positioned in the "A" formation located in the lower cab door panels extending approximately 14" from the door's bottom. | $365 |
| 1550-0141 | Polished stainless steel protective trim to wrap cab door jambs on all (4) entry doors. Trim to extend 3" past closed door edge (as applicable). E-One custom chassis only. | $1,175 |
| 1550-0144 | Reflective [#COL] individual striping positioned in the "A" formation located on the cab door panels. | $227 |
| 1550-0145 | [#COL] chevron "A" individual stripes on lower cab door panel approx 18" high. Stainless steel/painted door panels only. CIIX and TyphoonX only. | $382 |
| 1550-0146 | [#COL] chevron "A" individual stripe on lower cab door panel approx 12" high. Stainless steel/painted door panels only. CIIX and TyphoonX only. | $343 |
| 1550-0147 | Location - Front door map pockets shall be located approximately 17" below window. | $108 |

| Item No. | Description | |
|---|---|---|
| 1550-0148 | Reflective [#COL] 3M Diamond Grade striping positioned in the "A" formation located in the lower cab door panels extending approximately 12" from the door's bottom. | $345 |
| 1550-0150 | Rear crew cab door windows with rear fixed panel. Includes electric roll-down actuation. Each door to be individually controlled. Each window switch will be flush mounted below rearward fixed window area with minimal or no switch mounting protrusion. For use with paddle style door latching. | $1,780 |
| 1550-0151 | The map boxes attached to cab doors shall include press on black trim. The trim shall be applied along the edge of map box opening. | $82 |
| 1550-0154 | Chrome edge guard on rear vertical edges of cab doors. | $81 |
| 1550-0155 | Rear crew cab door window with rear fixed panel. Includes electric roll-down actuation. Door to be individually controlled. For use with paddle style door latching. | $877 |
| 1550-0156 | Cab door locks - electric. Includes driver side exterior touchpad (2) remote key fobs barrel style key lock and manual interior lock on each door. | $1,240 |
| 1550-0160 | Cab door locks - electric. Includes (2) remote key fobs barrel style key lock on exterior of each door and manual interior lock on each door. | $756 |
| 1550-0161 | Warning light Whelen 500 Super LED (4) red model 50R03ZCR lights with clear lenses. Flashing lights wired through each individual door. Location: One on each of the interior cab doors (outboard position). | $1,221 |
| 1550-0162 | Door mounted Whelen 500 series amber TIR6 LED flashing lights (2) w/clear lenses. Locate lights on each cab door in the outboard position. Lights to be switched with door ajar. | $650 |
| 1550-0163 | Map pockets cab rear doors aluminum plate painted Zolatone black. | $180 |
| 1550-0166 | Stainless steel protective trim on rear edge of cab door openings. Includes front cab door lower angle areas. E-ONE custom chassis only. | $290 |
| 1550-0167 | Reflective Blue 3M Scotchlite and Fluorescent Yellow Green 3M Diamond Grade striping positioned in the "A" formation located in the lower cab door panels. | $313 |
| 1550-0169 | Cab door panels aluminum painted to match cab interior. (QST2 only) | $1,370 |
| 1550-0171 | (4) TecNiq LED cab step area lighting. Locate each light [#LOC]. Lights to be switched with door ajar. | $222 |
| 1550-0173 | Stainless steel trim on bottom edge of the over wheel cab compartment opening (ea). Vertical trim edge to be 3" tall. | $128 |
| 1550-0174 | Reflective [#COL] 3M Diamond Grade striping positioned in the "A" formation located in the entire SS cab door panels below the windows. | $959 |
| 1550-0175 | Door mounted Whelen model 0SA00MCR LED flashing lights. Locate lights [#LOC]. Lights to be switched with door ajar. | $297 |
| 1550-0176 | Door mounted Whelen 3SR00FRR red super LED flashing lights (4). Locate lights [#LOC]. Each individual light shall be activated by the corresponding cab door ajar circuit. | $739 |
| 1550-0177 | [#COL] Reflexite V98 striping positioned in the "A" formation located on the cab door panels. | $252 |
| 1550-0178 | [#COL] Reflexite V98 chevron "A" stripe on lower cab door panel approx 12" high. Stainless steel/painted door panels only. TyphoonX CIIX and QST2 only. | $348 |
| 1550-0179 | [#COL] Reflexite V98 chevron "A" stripe on lower cab door panel approx 18" high. Stainless steel/painted door panels only. TyphoonX CIIX and QST2 only. | $386 |
| 1550-0180 | Cab door panels stainless steel. Includes upper and lower panels with seam below handrail. | $1,599 |
| 1550-0181 | [#COL] chevron "A" printed stripe on lower cab door panel below map pockets to bottom of door. Stainless steel/Zolatone door panels only. | $308 |
| 1550-0182 | Door mounted Federal Signal amber MPS600-AA LED flashing lights (4) w/clear lenses. Locate lights [#LOC] . Lights to be switched with door ajar. | $923 |
| 1550-0183 | Recess in upper rear cab doors in lieu of windows (PR). (1) each side approx. 10L x 5W x 3D for latex glove box. Includes (2) velcro straps for each recess to be mounted at final inspection. | $593 |
| 1550-0184 | Map pockets cab front doors aluminum plate painted Zolatone black. | $180 |
| 1550-0185 | Cab door panels aluminum painted Zolatone gray. Includes upper and lower panels with seam below handrail. | $1,599 |
| 1550-0186 | (4) TecNiq T440 4" LED cab step area lighting. Locate each light [#LOC]. Lights to be switched with door ajar. | $222 |
| 1550-0188 | LINE-X Door Panels: The inner cab door panels shall be made out of aluminum plate coated with LINE-X for increased durability. | $1,827 |
| 1550-0189 | Map pocket officer cab front door aluminum plate painted Zolatone gray. | $90 |
| 1550-0190 | Warning light Whelen 500 Super LED (4) split red/amber model 50RA3ZCR lights. Flashing lights wired through each individual door. Location: One on each of the interior cab doors (outboard position). | $1,221 |
| 1550-0192 | Additional remote key fob (PR). | $84 |
| 1550-0193 | [#COL] Reflexite V98 striping positioned in the "A" formation located in the entire SS cab door panels below the windows. | $772 |
| 1550-0194 | Cab door window trim mechanically fastened in place of standard. | $62 |
| 1550-0196 | (2) TecNiq T440 4" LED cab step area lighting. Locate each light [#LOC]. Lights to be switched with door ajar. | $111 |

| Item No. | Description | |
|---|---|---|
| 1550-0197 | Map pockets on the cab front doors shall be aluminum plate painted LINE-X. The LINE-X color to match the interior of the cab. | $358 |
| 1550-0199 | Warning light Whelen 500 Super LED (4) amber model 5VA02ZAR vertical lights with 5FLANGEP mount. Flashing lights wired through each individual door. Location: One on each of the interior cab doors (outboard position) mounted vertically. | $1,416 |
| 1550-0200 | (4) Whelen 3" LED cab step area lighting. Locate each light [#LOC]. Lights to be switched with door ajar. | $618 |
| 1550-0201 | Door mounted Whelen ION amber LED flashing lights. Locate lights [#LOC]. Lights to be switched with door ajar. | $1,308 |
| 1550-0202 | Relocate driver master power window controls to driver lower cab dash adjacent to steering column. | $416 |
| 1550-0203 | Map pockets cab front doors stainless steel 1.5" deep. | $157 |
| 1550-0204 | Locate rear cab door ajar switches high on door hinges. | $102 |
| 1550-0205 | Polished stainless steel protective trim on rear edge of cab door openings. Includes front cab door lower angle areas. E-ONE custom chassis only. | $290 |
| 1550-0206 | Cab door panels aluminum painted Zolatone "Dark Red" 20-78. | $1,394 |
| 1550-0207 | Cab door locks - electric. Includes driver and officer side exterior touchpads (2) remote key fobs barrel style key lock and manual interior lock on each door. | $1,423 |
| 1550-0208 | Relocate driver master power window controls to center cab dash. | $416 |
| 1550-0209 | Door mounted Whelen ION red LED flashing lights. Locate lights [#LOC]. Lights to be switched with door ajar. | $1,308 |
| 1550-0210 | Door mounted Power Arc model PP2-RC red LED flashing lights (4) w/clear lenses. Locate lights [#LOC]. Lights to be switched with door ajar. | $852 |
| 1615-0000 | Vista cab 20" with extension for top mount pump panel controls. Includes 4" cap for additional headroom. Note: "Delete down view window" option required with full width pump module. | $10,898 |
| 1615-0001 | Vista full height rear doors 12". | $3,719 |
| 1615-0002 | Vista full height rear doors 16". | $3,894 |
| 1615-0003 | Vista full height rear doors 20". | $4,068 |
| 1615-0013 | Vista cab 20" with extension for top mount pump panel controls. Note: "Delete down view window" option required with full width pump module. | $10,409 |
| 1615-0015 | Diamond plate overlay (integral as applicable) front of vista slope. | $491 |
| 1615-0019 | Vista full height rear doors 20". Includes 4" cap for a 24" total raised roof. | $5,523 |
| 1615-0020 | Side vista roof windows behind rear doors. 80" cab with medium doors only. | $124 |
| 1615-0030 | Cab roof to be smooth plate painted job color in lieu of standard diamond plate construction. | $924 |
| 1620-0000 | Overlay the painted grille with stainless steel | $350 |
| 1620-0002 | Stainless steel grille for Typhoon X. | $923 |
| 1620-0003 | Stainless steel grille for Typhoon | $923 |
| 1620-0006 | CIIX stainless steel grille for Typhoon X. | $923 |
| 1620-0012 | Grill lettering - special. Black powder coated S/S. (QST2 only)(See shop order file for desired name) | $379 |
| 1640-0000 | Step below cab door. Located [#LOC]. Steps under front cab doors shall not interfere with approach angle. | $238 |
| 1640-0009 | Steps below front cab door - CFR swing style (PR). Includes plunger stop to hold in the down position. Step to be centered below cab step. | $965 |
| 1640-0016 | Step below cab door; stirrup style without back wall. Located [#LOC]. Steps under Front Cab doors shall not interfere with Approach Angle. | $238 |
| 1640-0018 | Step below cab door; smooth plate painted black durabak. Located [#LOC]. Steps under front cab doors shall not interfere with approach angle. | $313 |
| 1640-0025 | Steps below front cab door - CFR swing style (PR) painted black Durabak. Includes plunger stop to hold in the down position. Step to be centered below cab step. | $1,040 |
| 1640-0026 | Removable bottom panel on cab steps. | $225 |
| 1640-0028 | Step below cab door Zico VS-20-5 elect swing out/down. Step to extend when door is opened and retract when closed. Steps shall be flush with outter edge of cab when stowed. Location: Each cab door | $1,584 |
| 1640-0029 | Each cab step well's kick plates and steps shall be aluminum smooth plate IPO diamond plate and all surfaces painted black durabak up to and below cab floor level. | $624 |
| 1640-0030 | Each cab step well's kick plates and steps shall be aluminum smooth plate IPO diamond plate and all surfaces painted Gray Zolatone up to and below cab floor level. All step surfaces provided with a multi-directional aggressive gripping surface (Gator Grip) incorporated into the aluminum smooth plate. | $624 |
| 1640-0031 | Each cab step well's kick plates and steps shall be aluminum smooth plate IPO diamond plate and all surfaces painted Black Scorpion (rough finish) up to and below cab floor level. All step surfaces provided with a multi-directional aggressive gripping surface (Gator Grip) incorporated into the aluminum smooth plate. | $624 |

| Item No. | Description | |
|---|---|---|
| 1640-0032 | Step below cab door Zico VS-20-5 elect swing out/down. Step to extend when door is opened and retract when closed. Steps shall be flush with outter edge of cab when stowed. Location: Front cab doors. | $1,584 |
| 1640-0034 | Steps below rear cab door - CFR swing style (PR) painted black Durabak. Includes plunger stop to hold in the down position. Step to be centered below cab step. | $1,040 |
| 1640-0035 | Each cab step well's kick plates and steps shall be aluminum diamond plate without a multi-directional aggressive gripping surface (Gator Grip). Includes embossed diamond plate bolt-on panels at each lower step area. | $624 |
| 1640-0036 | LINE-X package for custom cab steps: Includes cab step wells (everything below the cab floor) and all welded and bolt on steps including stirrup and swing out steps as applicable. Steps hanging below the cab shall have LINE-X coating inside and outside. DEF tank door or any other access doors are also included in this package if located in the step well area below the cab floor. | $942 |
| 1640-0038 | Intermediate front cab door step (PR). | $457 |
| 1640-0039 | Steps below rear cab door - CFR swing style (PR). Includes plunger stop to hold in the down position. Step to be centered below cab step. | $965 |
| 1640-0041 | LINE-X package for custom cab steps (NO DOORS): Includes cab step wells (everything below the cab floor) and all welded and bolt on steps including stirrup and swing out steps as applicable. Steps hanging below the cab shall have LINE-X coating inside and outside. DEF tank door or any other access door located in the step well area below the cab floor SHALL NOT have LINE-X finish. | $840 |
| 1640-0043 | Upgrade the cab bolt-on steps to include cutouts with Grip Strut inserts IPO Gator Grip. | $541 |
| 1640-0045 | Step below cab door. Open back style with angled corners. Located [#LOC]. Steps under front cab doors shall not interfere with approach angle. | $238 |
| 1640-0049 | Step below cab door to be hinged. Located [#LOC]. Steps under front cab doors shall not interfere with approach angle. | $238 |
| 1670-0001 | Ramco 6001FFR mirrors. Remote controlled with top CAS750 convex. Location: [#LOC]. | $1,584 |
| 1670-0002 | Ramco 6001MCR mirrors. Remote controlled with bottom convex. Location: [#LOC]. | $1,258 |
| 1670-0003 | Velvac 2010 mirrors. Door mounted west coast style with remote control and heat. | $676 |
| 1670-0005 | Mirror 8" convex to be cab mounted [#LOC]. | $88 |
| 1670-0006 | 1.5" Extension for Ramco Mirrors (OBSOLETE FROM MANUFACTURER) | $164 |
| 1670-0007 | 3" Extension for Ramco Mirrors | $164 |
| 1670-0008 | 4.5" Extension for Ramco Mirrors. | $164 |
| 1670-0010 | Retrac West Coast mirrors mounted on cab doors. | $311 |
| 1670-0013 | Both cab mirrors to be heated. | $308 |
| 1670-0014 | Ramco 6001FFR mirrors. Remote controlled with top CAS750 convex. | $1,568 |
| 1670-0015 | Velvac 2010 mirrors with marker lights. Door mounted west coast style with remote control and heat. | $711 |
| 1670-0017 | Mirror Stainless Steel 8" Convex above officer side cab brow Bell Type Mounting 2 Piece Adjustable Telescoping Arm. Head #983 Arm #3983 | $93 |
| 1670-0018 | Velvac mirrors model 2025 with LED directional arrows. Door mounted (bottom mount) with remote control and heat. | $1,161 |
| 1670-0019 | Ramco 6001CCR-750 mirrors. Remote controlled with bottom convex and top CAS750 convex. Location: [#LOC]. | $1,686 |
| 1670-0021 | Ramco 6001FFR mirrors. Remote controlled with CAS750R top remote convex. Location: [#LOC] | $1,830 |
| 1670-0023 | Mirror Stainless Steel 8" Convex above driver side cab brow Bell Type Mounting 2 Piece Adjustable Telescoping Arm. Head #983 Arm #3983 | $93 |
| 1670-0028 | Rosco AccuStyle 818 door mounted mirrors (bottom mount). Chrome w/LED turn signals remote heated and convex. | $1,166 |
| 1670-0030 | Kenworth model MX148S wide angle mirror. Location: [#LOC]. | $186 |
| 1670-0031 | 2" extension for Ramco mirrors. | $164 |
| 1670-0032 | Ramco 6001FFR mirrors. Remote controlled with top CAS750 convex and LED turn signals. Location: [#LOC]. | $2,115 |
| 1670-0035 | Ramco 6001FFR mirrors with INVUE camera. Remote controlled with top CAS750 convex. Location: [#LOC]. | $2,793 |
| 1670-0036 | Ramco 6001MCR mirrors with INVUE camera. Remote controlled with bottom convex. Location: [#LOC] | $2,793 |
| 1670-0038 | Lang Mekra mirrors w/LED marker lights and turn signals. Door mounted west coast style with convex remote control and heat. | $1,368 |
| 1670-0039 | Moto mirrors model 340530. Door mounted with driver heat; officer remote control and heat. | $1,136 |
| 1670-0044 | Ramco 6001FFR mirrors with INVUE camera and LED turn signals. Heated/remote controlled flat glass with heated/remoted controlled top CAS750 convex. Location: [#LOC]. | $2,716 |
| 1670-0046 | Ramco 6001MCR mirrors. Remote controlled with bottom convex and LED turn signals. Location: [#LOC]. | $1,561 |
| 1670-0048 | Retrac Aerodynamic remote heated mirrors (PR) mounted on cab doors. | $1,232 |

| Item No. | Description | |
|---|---|---|
| 1670-0052 | Ramco 6000-PCHR mirrors. The mirrors shall incorporate heated and remote for both flat and convex using (2) Ramco model ELE-310 switches. Location: [#LOC]. | $1,833 |
| 1670-0053 | Moto mirrors model 7-2386. Door mounted with remote control and heat. | $958 |
| 1670-0054 | Velvac mirrors model 2030 chrome with LED directional arrows. Front corner mounted with remote control and heat. | $1,380 |
| 1670-0055 | Velvac convex mirrors (PR). Model Top Hat bolt-on convex mirror. For use with model 2025 or 2030 mirrors only. | $210 |
| 1670-0056 | Retrac west coast remote heated mirrors (PR) mounted on cab doors. | $1,310 |
| 1670-0059 | Retrac Mirror stainless steel 10" 3-arm convex above officer side cab brow 3 piece adjustable telescoping arm. Head #604953 Arm assy#604671 | $289 |
| 1670-0061 | Retrac west coast heated mirrors (PR) with convex lower mounted on cab doors. Includes green marker on officer and red marker on driver. | $922 |
| 1670-0062 | Retrac Aerodynamic dual vision chrome west coast style mirrors (PR) mounted on cab doors. Includes remote control and heat for std and convex mirrors and LED marker light. | $1,607 |
| 1670-0063 | Velvac mirrors model 2025 with LED directional arrows. Door mounted (bottom mount) with remote control and heat full bottom glass and heated top hat convex. No lower convex. | $1,227 |
| 1670-0064 | Retrac west coast remote heated mirrors with lights (PR) mounted on cab doors. | $1,310 |
| 1670-0065 | Retrac Mirror stainless steel 10" 3-arm convex above driver side cab brow 3 piece adjustable telescoping arm. Head #604953 Arm assy#604671 | $289 |
| 1670-0066 | Ramco 6001FFR black mirrors. Remote controlled with black top CAS750 convex. Location: [#LOC]. | $1,840 |
| 1670-0067 | Ramco model CRM-1752-3HRT-853 mirrors. The mirrors shall incorporate heated and remote for both flat and convex using (3) Ramco model ELE-310 switches. Location: [#LOC]. | $2,202 |
| 1670-0068 | Lang Mekra mirrors w/LED marker lights and turn signals. Black door mounted west coast style with convex remote control and heat. | $1,368 |
| 1670-0070 | Velvac mirrors model 2030 chrome with full face lower upper bolt-on convex and LED marker lights. Front corner mounted with remote control lower and dual heat. | $1,788 |
| 1670-0071 | Lang Mekra mirrors (No marker/turn). Door mounted west coast style with convex remote control and heat. | $1,368 |
| 1670-0072 | Ramco model CRM-310-1350CCHR mirrors. The mirrors shall incorporate heat and remote using Ramco model ELE-310 switch. Location: [#LOC]. | $2,202 |
| 1670-0073 | Driver side Velvac 2010 door mounted west coast mirror with remote and heat. Officer side Ramco 6001FFR front corner mounted remote controlled with top CAS750 convex and heat. | $1,275 |
| 1670-0074 | Velvac V-Max mirrors black with lower convex and LED marker lights. Door mounted (bottom mount)driver front cab corner officer with remote control and heat. | $1,241 |
| 1675-0001 | Stainless steel trim belt on front of cab. Location: [#LOC]. | $488 |
| 1675-0005 | Cab roof vent with-out fan (pair). Location: (1) each side centered above rear cab doors. | $381 |
| 1675-0006 | Vent w/fan roof mounted pair. | $853 |
| 1675-0008 | Step chassis off road type pair. Required on all medium duty 4x4 chassis for each cab door. | $444 |
| 1675-0013 | Mud flaps (PR) front black with logo. | $163 |
| 1675-0014 | SCBA bottle storage two driver side of cab behind rear door with cast doors. | $753 |
| 1675-0015 | Cab roof mounted diamond plate 3 sided light tower shield with 45 degree front slope. | $968 |
| 1675-0016 | Cab roof mounted painted job color 3 sided light tower shield with 45 degree front slope. | $1,205 |
| 1675-0020 | Auto eject stainless steel scuff plate. | $96 |
| 1675-0022 | Pair of 18" handrails located just behind driver and officer front door one each side. | $379 |
| 1675-0023 | Pair of 18" handrails located just behind driver and officer rear door (ALS doors if equipped) one each side. | $379 |
| 1675-0024 | Pair of 36" handrails located just behind driver and officer rear door (ALS doors if equipped) one each side. | $412 |
| 1675-0025 | SCBA bottle storage two officer side of cab behind rear door with cast doors. | $753 |
| 1675-0030 | Mud flaps front black with E-ONE logo. | $159 |
| 1675-0033 | Chrome fire bell with eagle. Location: Officer's side of front bumper extension. | $1,414 |
| 1675-0034 | Cab driprail drain holes. The driprail just before the vista roof begins to have a drain hole provided (one each side of cab). | $89 |
| 1675-0035 | Belt size tag. Install next to fluid capacity tag. Tag to provide belt sizes for all belts provided. | $108 |
| 1675-0036 | Cab wheel well liners. The cab wheel well liners to be aluminum IPO ABS plastic. Paint job color. | $612 |
| 1675-0038 | Sign plate smooth 30" x 30" mounted on cab roof (vista if equipped). Color: [#COL]. | $244 |
| 1675-0039 | Pair of 48" handrails located just behind driver and officer rear door (ALS doors if equipped) one each side. | $474 |
| 1675-0041 | Stainless steel trim belt low on sides of cab. | $1,447 |
| 1675-0042 | Rear cab wall to be smooth 3/16" aluminum plate. Cab wall to be finish painted to match the cab paint scheme. | $356 |
| 1675-0043 | Sliding rear window mounted above pump panel. Top mount enclosed cab. | $1,140 |
| 1675-0045 | Hansen white LED cab handrails upgrade (EA). | $200 |
| 1675-0048 | Rear cab wall to be smooth 3/16" aluminum plate with a diamond plate overlay. | $445 |
| 1675-0053 | Stainless steel scuff plates full height on rear cab corners (PR) | $246 |

| Item No. | Description | |
|---|---|---|
| 1675-0054 | Sign plate smooth 18"x28" mounted one each side cab roof (vista if equipped). Color: [#COL] | $483 |
| 1675-0055 | Radio box 18W x 12H x 10D. Location: Centered up high of vista area recessed on the rear exterior cab wall with door hinged to the bottom. | $513 |
| 1675-0056 | Stainless steel scuff plates on rear cab roof corners (PR) | $186 |
| 1675-0057 | Mounting plate for battery charger receptacle and indicator - removable brushed stainless steel. | $291 |
| 1675-0058 | Chrome fire bell with gold eagle. Location: Officer's side of front bumper extension. | $1,490 |
| 1675-0059 | Rear cab wall to be smooth 3/16" aluminum plate with swirl plate overlay. | $732 |
| 1675-0060 | Sign plate smooth 40" x 80" mounted on cab roof (vista if equipped). Color: [#COL] | $700 |
| 1675-0061 | Cab roof mounted 4 sided light tower shield painted job color. | $1,567 |
| 1675-0062 | Electric chrome fire bell with eagle. Location: Driver's side of front bumper extension. Includes switch on officer side overhead console. | $1,978 |
| 1675-0063 | Mud flaps front black without logo. | $163 |
| 1675-0065 | Stainless steel roller assemblies for back of cab. (1) each side rear cab corners. | $296 |
| 1675-0067 | Cab roof mounted 3 sided light tower shield painted two-tone job color. | $1,205 |
| 1675-0071 | Remove side grille from wheel well areas of the cab. TyphoonX cab only. | $241 |
| 1675-0072 | (4) roof mounted (welded) sign plate mounting points. Mounts to space roof sign plate off cab roof and allow for easy removal. | $282 |
| 1675-0073 | Hose deflector pin to protect Q2B on front bumper extension. | $212 |
| 1675-0074 | Cab roof mounted 3 sided light tower shield with welded sides and painted job color with 45 degree front slope. | $1,425 |
| 1675-0075 | Cab roof mounted painted job color 3 sided light tower shield with 90 degree front slope. | $1,205 |
| 1675-0076 | Cab roof mounted diamond plate 3 sided light tower shield with 90 degree front slope. | $968 |
| 1675-0077 | Storage box on rear cab roof 48W x 48L x 12H with 4-sided lid painted two-tone job color (if applicable) | $1,967 |
| 1675-0078 | Hansen red LED cab handrails upgrade (EA). | $200 |
| 1675-0079 | Diamond plate storage box for Little Giant model 17 on rear cab vista roof. Includes drop down door with push button latches and nylatron on floor. | $1,439 |
| 1675-0080 | Fixed rear cab wall narrow windows (ea). Location: driver side rear wall. | $62 |
| 1675-0081 | Smooth plate sides painted job color and diamond plate top/door storage box for Little Giant model 17 on rear cab vista roof. Includes 45 degree front angle rear backstop partition drop down door with push button latches and nylatron on floor. | $3,303 |
| 1675-0084 | Side extensions at cab wheel wells for 4x4 application. | $854 |
| 1675-0085 | Under riser half depth roll-out trays. Includes cab floor extensions. Requires riser height exterior compartments. | $1,279 |
| 1675-0086 | Raised cab wheel wells for low OAH applications. | $444 |
| 1675-0087 | Pair of handrails (8" driver and 18" officer) located just behind driver and officer front door. | $489 |
| 1675-0088 | Fluid capacity tag to include filter model numbers for engine oil transmission fuel air hydraulic and coolant. Tire size front and rear to be included on tag. | $108 |
| 1675-0089 | Radio box 18W x 12H x 10D. Location: Up high center rear wall panel offset to driver side of vista area recessed on the rear exterior cab wall with door hinged to the bottom. Includes rubber bumpers on upper corners of door. | $513 |
| 1675-0090 | Light tower riser ahead of vista. For use with large towers. Installed tower to not exceed over all height of vista roof. | $1,756 |
| 1675-0091 | Lightbar mounting angles (PR). Position on cab roof with each angle oriented front to rear with one leg welded to cab roof leaving top horizontal surface for lightbar mounting legs. | $286 |
| 1675-0092 | Number plate mounting. "Z" type extrusions welded to cab roof (upper leg facing out) to support perimeter of sign plate. Allows sign to be attached without drilling through cab roof. | $395 |
| 1675-0093 | Grille on side of cab over wheel (PR). Grilles are non-venting and for cosmetic purposes only. Includes black-out surface behind grilles. | $250 |
| 1675-0094 | Microphone/Speaker box. 11"H x 9"W x 6.5"D Location: Centered up high recessed on the rear vista exterior cab wall with vertically hinged door. | $513 |
| 1675-0095 | Diamond plate storage box on rear cab roof 80W x 36D x 14H with lid. | $1,740 |
| 1675-0096 | Fixed rear cab wall narrow windows (ea). Location: officer side rear wall. | $62 |
| 1675-0110 | Cab exterior hand rails to use Austin Hardware model GR-002-AL-BRT-144 knurled bright anodized aluminum tubes IPOS. | $127 |
| 1675-0111 | Pair of 24" handrails located just behind driver and officer front door one each side. Handrail to extend 6" lower than standard for 4x4 application. | $397 |
| 1675-0112 | Pair of 24" handrails located just behind driver and officer rear door (ALS doors if equipped) one each side. Exterior handrail to extend 6" lower than standard for 4x4 application. Includes interior rubber grab handles on rear facing wall of driver and officer side wheel well risers. | $611 |
| 1675-0116 | Brushed stainless steel scuff plates for cab handrails (PR). | $209 |
| 1675-0118 | Fluid capacity tag to include lug nut torque specs for front and rear wheels in addition to required information. | $108 |
| 1675-0123 | Chrome fire bell laser etching. Requires design provided in digital format. One side only. | $633 |
| 1675-0124 | Additional fluid capacity tag in French. | $108 |

| Item No. | Description | |
|---|---|---|
| 1675-0125 | Mounting plate for battery charge receptacle indicator and air auto eject receptacle - removable brushed stainless steel. | $291 |
| 1675-0126 | Diamond plate storage box on rear cab roof 70W x 40D x 8.5H with lid. | $1,740 |
| 1675-0130 | Mounting plate for battery charge receptacle indicator air auto eject receptacle and block heater receptacle - removable brushed stainless steel. | $291 |
| 1675-0131 | Auto Kwikee step. Location: [#LOC]. | $841 |
| 1675-0133 | Rear cab and vista glass (if so equipped) to be dark tint (smoked glass with approx 50% light transmittance) IPOS. Includes all glass rearward of front cab doors. | $575 |
| 1675-0134 | Cab wheel well liners. The cab wheel well liners to be aluminum with sanded finish IPO ABS plastic. | $499 |
| 1675-0135 | Sign plate smooth with sanded finish 20" x 20" mounted on cab roof forward of vista. | $244 |
| 1675-0136 | Radio box 18W x 14H x 12D. Location: Up high center rear wall panel of vista area recessed on the rear exterior cab wall with door hinged to the bottom. Includes rubber bumpers on upper corners of door. | $513 |
| 1675-0138 | Cab roof mounted 3 sided roof mounted AC shield with 45 degree front slope painted two-tone job color. | $988 |
| 1675-0140 | Cab roof mounted diamond plate 3 sided AC shield with 45 degree front slope. | $752 |
| 1675-0141 | Radio box 32W x 7H x 6D. Location: Centered up high of vista area recessed on the rear exterior cab wall with door hinged to the top. Includes plunger hold open. | $572 |
| 1675-0142 | Radio box 12W x 8H x 6D. Location: Centered up high of vista area recessed on the rear exterior cab wall with door hinged to the top. Includes plunger hold open. | $513 |
| 1675-0143 | A diamond plate storage box shall be mounted on top of the cab roof for storage of (1) stokes basket model 71. Stokes basket is 86Lx24Wx8H. Box is to be 26Wx87.5Lx9H in front box will be sloped to match Vista rise. Box will be opened from the rear. Restraints will be included in the box to secure the basket in place. Box is to be centered side to side. | $1,509 |
| 1675-0144 | Pair of 24" handrails located just behind driver and officer front door one each side. | $397 |
| 1675-0145 | Diamond plate cover to protect the air conditioner lines on the cab roof. | $227 |
| 1675-0146 | Polished stainless steel scuff plates full height on rear cab corners (PR). | $446 |
| 1675-0147 | Electric chrome fire bell with eagle. Location: Driver's side of front bumper extension. Includes switch on officer side dash. | $1,978 |
| 1675-0149 | The battery charger receptacle mounting plate shall be fabricated using 3/16" aluminum smooth plate. It shall be painted to match cab two tone job colors and align with the paint break as mounted. | $143 |
| 1675-0150 | Storage box on back of cab above top mount walkway for backboard/stretcher. Backboard dim is 72Lx27Hx8D; stretcher dim is 65Lx17Hx4D. Box is to be diamond plate 76Lx27Wx8H with a vertically hinged door at each side with a thumb latch in each door. Box to be centered side to side approximately 4" above top mount walkway. | $1,439 |
| 1675-0151 | Pair of 24" handrails located in the interior of driver and officer rear doors. The handrails shall be mounted on the rear wall. If equipped with an ALS cabinet the handrails shall be mounted on the ALS interior surface outboard of the ALS access door within easy reach of rear door entry personnel. | $395 |
| 1675-0152 | Sign plate smooth 40" x 40" mounted on cab roof (vista if equipped). Color: [#COL]. | $324 |
| 1675-0153 | SCBA bottle storage two driver and officer side of cab behind rear door with 3/16" plate doors painted job color. | $1,503 |
| 1675-0154 | The cab shall have trim plates made from diamond plate to overlay the existing commercial cab closeout panels below the doors left and right. | $398 |
| 1675-0157 | The exterior lower rear of the commercial cab to have a diamond plate overlay. For use with a top mount application. | $169 |
| 1675-0158 | Backboard storage sleve for (1) board. Includes retaining strap for board. Loc: [#LOC]. | $707 |
| 1675-0159 | Mounting plate for battery charge receptacle indicator and block heater receptacle - removable brushed stainless steel. | $291 |
| 1675-0160 | Backboard storage compartment for (1) board. Includes (2) hinged doors (1) each side with (2) push button latches for each door. Loc: [#LOC]. | $861 |
| 1675-0161 | Escape hatch located on rear cab roof. | $1,271 |
| 1675-0162 | Cab roof vent with-out fan (pair). Location: (1) each side offset above driver and officer. | $381 |
| 1675-0163 | Storage box (additional) to house light tower controls/tether mounted on the rear of the cab roof offset to the driver side (exterior). The storage box shall be constructed of tread plate include a drop down door tied into the door ajar circuit and thumb latch(s). | $369 |
| 1675-0164 | Cab roof mounted painted job color 3 sided light tower shield with 45 degree front slope to match the height of the light tower in the bedded position (+1" -0"). | $1,313 |
| 1675-0166 | Cab roof mounted painted job color 3 sided light tower shield with 45 degree front slope. Located rearward on flat roof (non vista). Placement to allow 45 degree shield to be placed in normal vista rise location to allow cab to appear to have vista roof. | $1,309 |
| 1675-0167 | Sign plate mounted to the full width front bumper center hose tray lid. Smooth plate painted FLNA4145 Black sized according to space available. | $180 |

| Item No. | Description | |
|---|---|---|
| 1675-0168 | Sign plate smooth 30" x 45" mounted on cab roof (vista if equipped). Color: [#COL]. | $324 |
| 1675-0169 | Door single vertically hinged painted with Tri-Mark latch. Location(s): driver side canopy area of cab. | $942 |
| 1675-0170 | Embossed diamond plate in place of ALL standard and optioned diamond plate on cab. | $1,477 |
| 1675-0171 | Cab roof mounted 3 sided dual air condensor shield with 45 degree front slope. The shield shall be constructed using smooth aluminum plate. Finish: Painted to match upper cab. | $968 |
| 1675-0173 | Radio box 32"W x 7"H x 6"D. Location: Centered up high of vista area recessed on the rear exterior cab wall with door hinged to the bottom. Door to fold down as far as possible to cab. | $572 |
| 1675-0174 | Hansen green LED cab handrails upgrade (EA). | $200 |
| 1675-0178 | Awning rear of cab rearward facing. A wind deflector shall be mounted rearward on the cab roof full width as part of the pump module awning. On the back side of the wind deflector a vertical mounting plate shall be included. An awning mounting bracket shall be mounted to the wind deflector vertical plate. The awning mounting bracket shall include 6" of vertical adjustment to allow the awning to be manually raised up to 6" higher from its base position and include plate work to shield light when raised to the desired height. A 12V Marquee Over the Door/Window awning 72" long X 36" extension white in color shall be mounted in place on the adjustable bracket centered about the top mount pump panel. An awning deployment switch shall be included on the pump instrument panel. The awning deployment and adjustable height shall be included in the door ajar circuit. | $3,860 |
| 1675-0181 | (1) 48" handrail located just behind rear door (ALS doors if equipped). 3 door custom cabs only. | $239 |
| 1675-0182 | Mounting plate for battery charger receptacle and indicator - removable polished stainless steel. | $291 |
| 1675-0183 | Side fixed windows behind rear doors. Windows to be same height as canopy windows. 80" cab with medium doors only. | $324 |
| 1675-0184 | Chrome fire bell with eagle. Location: Officer's side front cab corner. | $1,521 |
| 1675-0185 | Two (2) pair of 30" handrails. One (1) pair located just behind driver and officer rear door (ALS doors if equipped) one each side for access of cab rear door each side. The other pair located behind rear doors and rearward of handrails one each side for access to top mount walkway each side. | $780 |
| 1675-0186 | Sign plate smooth 30" x 30" mounted on cab roof forward of vista. Color: [#COL]. | $244 |
| 1675-0187 | Pair of 24" handrails located just behind driver and officer rear door one each side. | $397 |
| 1675-0189 | Door single vertically hinged painted with Tri-Mark latch. Location(s): officer side canopy area of cab. | $942 |
| 1675-0190 | Hard Suction Storage Rack (PR). Driver/officer side cab roof. Includes spring hold downs and scuff plates behind spring mounts (as applicable). Racks installed front to rear between side light bars and light tower. | $774 |
| 1675-0191 | Sign plate smooth with painted finish 24" x 24" mounted on cab roof forward of vista. Color: [#COL]. | $244 |
| 1675-0192 | Rear cab wall to be smooth 3/16" aluminum plate painted black Durabak. Includes rear facing extrusions. | $732 |
| 1675-0193 | Polished stainless steel trim belt low on sides of cab. No black trim on upper and lower areas. | $1,710 |
| 1675-0195 | Body compartment interior painted black Durabak. Only for half height compartments. IIncludes Back Top Bottom (unless it is diamond plate) and Side Walls Compartment: [#LOC]. | $360 |
| 1675-0197 | Window cab side fixed officer's above medical cabinet. | $163 |
| 1675-0198 | Polished stainless steel trim belt low on sides of cab. | $1,710 |
| 1675-0200 | Hansen blue LED cab handrails upgrade (EA). | $200 |
| 1675-0203 | Radio box 12W x 8H x 6D. Location: Centered up high of vista area recessed on the rear exterior cab wall with door hinged to the bottom. | $513 |
| 1675-0204 | The cab roof shall be diamond plate painted black durabak. If equipped with trough overlay plate it shall be painted black durabak also. | $926 |
| 1675-0205 | Drip pan for a ROM roll-up door (EA). Location(s): driver and officer side ALS door. | $171 |
| 1675-0206 | Pair of 18" handrails located on ALS doors just behind driver and officer rear door. | $379 |
| 1675-0208 | Cab exterior hand rails to be Stainless steel knurled grip surface hand rails in place of standard anodized handrails. | $312 |
| 1675-0209 | Stainless steel full height wrap on rear cab corners (PR). Includes under handrails behind rear cab doors (if equipped). Not available on long or extended cab with medium doors. | $453 |
| 1675-0210 | Cab roof mounted 3 sided roof mounted AC shield with 45 degree front slope painted job color. | $988 |
| 1675-0213 | Mounting plate for battery charger receptacle indicator and air inlet (if applicable). Plate to be removable stainless steel painted job color. | $155 |
| 1675-0214 | Rubber fenderettes in place of standard fender. | $295 |
| 1675-0215 | Brushed stainless steel 4" wide scuff plates for cab handrails (PR). | $209 |
| 1675-0217 | LINE-X package for custom cab roof: All roof plate surfaces including the rear lip over the back wall and trough plates if applicable shall have LINE-X coating. All plate work (risers boxes etc) fabricated at E-ONE and installed on the roof shall be included in this package. | $1,719 |

| Item No. | Description | |
|---|---|---|
| 1675-0218 | LINE-X package for custom cab back wall (exterior only): The entire exterior back wall (platework and extrusions) shall have LINE-X coating. | $1,342 |
| 1675-0219 | LINE-X package for custom cab fenderettes. | $145 |
| 1675-0220 | Chrome fire bell. Location: Officer's side of front bumper extension. | $1,414 |
| 1675-0221 | Window cab side fixed driver's above medical cabinet. | $163 |
| 1675-0222 | Fluid capacity tag to include filter model numbers for engine oil transmission fuel air hydraulic and coolant. Tire front/rear size and pressure to be included on tag. Include engine belt number(s) and egine serial number on plate. | $108 |
| 1675-0226 | Integral 110V heated glass for rear vista windows. Includes switch on pump panel. | $3,192 |
| 1675-0227 | Integral 110V heated glass for rear vista windows. Includes switch on rear overhead. TME cab with rear wipers only. | $3,192 |
| 1675-0229 | Pair of one piece knurled stainless steel 18" handrails located just behind driver and officer front door one each side. | $512 |
| 1675-0230 | Pair of one piece knurled stainless steel 36" handrails located just behind driver and officer rear door (ALS doors if equipped) one each side. | $601 |
| 1675-0231 | Pike pole mount (PR). Locate (1) each side rearward of rear cab doors. Includes lower tube painted job color upper PAC 1004 bracket and stainless steel scuff plate at top. | $689 |
| 1675-0232 | Customer supplied electric fire bell for dealer installation. Includes: bracing under extended front bumper extension (as applicable) and switch in officer side overhead panel. Location: Officer's side of front bumper extension. | $437 |
| 1675-0234 | Hansen amber LED cab handrails upgrade (EA). | $200 |
| 1675-0236 | Recess mount for officer side exterior front cab handrail. Mount to match exterior paint. | $321 |
| 1675-0237 | Window cab side fixed (EA). Locate officer canopy area below side facing flood light. | $163 |
| 1675-0238 | DEF Tank Inside Cab Door label to be mounted on the exterior of the driver side rear cab door. | $41 |
| 1675-0239 | Sign plate smooth 36" x 48" mounted on cab roof (vista if equipped). Color: [#COL]. | $324 |
| 1675-0240 | Custom cab roof trough overlay shall have LINE-X coating. | $319 |
| 1675-0241 | Hansen rubber insert handrail material on exterior of cab ipos. | $77 |
| 1675-0243 | Diamond plate trim approx. 2" tall below lower driver and officer side SCBA bottle doors on cab. | $154 |
| 1675-0245 | Polished stainless steel trim belt on front of cab. Location: [#LOC]. | $728 |
| 1675-0246 | Electric chrome fire bell with eagle. Location: Officer's side of front bumper extension. Includes switch on officer side overhead console. | $1,978 |
| 1675-0247 | Pair of 24" handrails located just behind driver and officer rear door (ALS doors if equipped) one each side. Exterior handrail to extend 6" lower than standard for 4x4 application. Includes interior rubber grab handles on the door jamb of driver and officer side rear door. | $611 |
| 1675-0249 | Pair of 24" handrails located just behind driver and officer front door one each side. Exterior handrail to extend 6" lower than standard for 4x4 application. Includes interior rubber grab handles low on interior forward door jamb. | $611 |
| 1675-0250 | Pair of one piece knurled stainless steel 48" handrails located just behind driver and officer rear door (ALS doors if equipped) one each side. | $690 |
| 1675-0252 | Customer supplied electric fire bell for dealer installation. Includes: bracing under extended front bumper extension (as applicable) and switch in officer side overhead panel. Location: Driver's side of front bumper extension. | $437 |
| 1675-0254 | Rear cab and vista glass (if so equipped) to be dark tint (smoked glass with approx 30% light transmittance) IPOS. Includes all glass rearward of front cab doors. | $575 |
| 1675-0255 | Pair of 48" handrails located just behind driver and officer rear door (ALS doors if equipped) one each side. Exterior handrail to extend 6" lower than standard for 4x4 application. Includes interior rubber grab handles on the door jamb of driver and officer side rear door. | $687 |
| 1675-0256 | Mounting plate for battery charger receptacle indicator and air inlet (if applicable). Plate to be removable stainless steel painted black. | $155 |
| 1675-0257 | LINE-X rear cab corner scuff plates. | $336 |
| 1675-0258 | Diamond plate rear upper cab scuff plates for telepole light heads. | $154 |
| 1675-0259 | LINE-X rear cab telepole light head scuff plates. | $336 |
| 1675-0260 | Swirled aluminum 7" wide scuff plates for cab handrails (PR). Includes adjusting handrails reward to accomodate scuff plate. Not available on medium cab or battery charge receptacle to rear of front cab door. | $305 |
| 1680-0000 | Air intake emergency shut-down. Dash mounted guarded switch. | $1,653 |
| 1680-0001 | Block heater 1000 watt. | $521 |
| 1680-0002 | Block heater 1500 watt. Available on ISM ISX and S60 only. | $533 |
| 1680-0005 | Thermatic fan clutch. | $1,446 |
| 1680-0006 | Drivelines 1710. | $1,076 |
| 1680-0007 | Drivelines 1810. Required on 1550 lb/ft torque or greater engines. | $1,686 |
| 1680-0008 | Tow eyes front painted below bumper/cab (PR). | $272 |
| 1680-0009 | Tow eyes front stainless steel below bumper / cab (PR). | $682 |
| 1680-0010 | Tow eyes front stainless steel mounted in up position. Requires 16" minimum bumper extension on custom chassis and 18" minimum bumper extension on commercial chassis. | $682 |

| Item No. | Description | |
|---|---|---|
| 1680-0011 | Tow eyes rear below body painted. | $625 |
| 1680-0012 | Tow eyes rear frame painted. | $556 |
| 1680-0013 | Tow hooks front stainless steel in down position. Requires extended bumper on commercial chassis. If Non-Extended bumper on Comm. Chassis tow hooks are to be ordered with chassis. | $815 |
| 1680-0014 | Tow hooks front stainless steel mounted up. Requires 12" minimum bumper extension on custom and commercial chassis. | $815 |
| 1680-0015 | Trailer hitch Class III mounted rear. | $995 |
| 1680-0016 | Exhaust end chrome plated. Due to high heat from current emission exhaust systems dis-coloring of exhaust end may occur after prolonged use. | $267 |
| 1680-0017 | Hotshift PTO. | $2,005 |
| 1680-0021 | Exhaust end for Plymovent. For exhaust extraction system. | $276 |
| 1680-0022 | Auto lube system Vogel. Chassis points only. | $4,284 |
| 1680-0042 | Tow hooks front painted in the down position. | $281 |
| 1680-0053 | Storage below rear bench seat. (1) hinged door on each side of the bench seat. | $622 |
| 1680-0056 | Cold weather pkg for cab. Includes (2) 8" fans fan clutch additional insulation on the front wall and insulation on rear cab heater hose lines (if equipped). | $3,431 |
| 1680-0060 | Deluxe Trim Pkg 4DR Navistar. | $4,394 |
| 1680-0075 | (3) way rear underbody receiver assembly. Includes rearward 9000 lb. winch receiver or Class III trailer receiver and (2) side facing 9000 lb. winch receivers- (1) each below rearward body compartments. Includes rearward tow eyes and electrical winch connections for each receiver. | $2,391 |
| 1680-0076 | Under front bumper 9K winch receiver. Includes electrical connection for portable winch application. Custom chassis only. | $1,886 |
| 1680-0079 | Pressure Sensing Governor DDEC Engine - Required with Fire Commander | $1,377 |
| 1680-0080 | Tow eyes front painted in up and down position. Tow eyes to use same holes for both sets. | $540 |
| 1680-0081 | Special cover kit for Memphis to include auto lube Vogel driver's side front frame and cannon plug cover | $432 |
| 1680-0082 | The air intake emergency cable reset. Officer side of cab below the front bumper. Locate so cable is not visible or can be pulled without reaching under the bumper. | $219 |
| 1680-0083 | Cooler for steering system. | $906 |
| 1680-0086 | 3" tubular protective bar under rear tailboard (width of tailboard) connected to frame to provide protection. Ends of tube to be sealed. | $2,255 |
| 1680-0087 | Radiator brush guard below cab. | $608 |
| 1680-0089 | Chassis exhaust to exit to driver side of chassis below the forward body compartment corner. | $1,324 |
| 1680-0090 | Block heater to have thermostatic controller. | $190 |
| 1680-0091 | Tow eyes front stainless in up position and painted in down position. | $948 |
| 1680-0092 | Tow blocks under front bumper extension. | $327 |
| 1680-0093 | Tow eyes front stainless steel with 3" holes mounted in up position. Requires 16 inminimum bumper extension on custom chassis and 18 in minimum bumper extension on commercial chassis. | $919 |
| 1680-0094 | Trailer hitch Class IV mounted rear. | $1,815 |
| 1680-0095 | Side underbody 9K winch receivers. Includes (2) side facing- (1) each below rearward body compartments for portable winch with electrical connection for winch. | $1,595 |
| 1680-0096 | Side underbody 9K winch receivers. Includes (2) side facing- (1) each below body compartment ahead of the rear wheels for portable winch with electrical connection for winch. | $1,595 |
| 1680-0099 | Block heater 1500 watt wired through inlet receptacle. Available on ISM ISX and S60 only. | $533 |
| 1680-0104 | OEM chassis step package for Freightliner M2 series. Includes mounting plate for the battery charger receptacle and air inlet. | $150 |
| 1680-0106 | OEM chassis step package for International 4000 and 7000 series. Includes mounting plate for the battery charger receptacle and air inlet. | $158 |
| 1680-0107 | Diamond plate trim package for a (2) door International. Includes a full length driver side and an officer side trim that will utilize pieces already supplied by the OEM. | $1,345 |
| 1680-0114 | Diamond plate trim package for a (4) door International. Includes a full length driver side and a (2) piece officer side trim that will utilize pieces already supplied by the OEM. | $2,687 |
| 1680-0116 | Oil pan heater. Fleetguard 22MM 150W/120V wired to shoreline. | $494 |
| 1680-0117 | Special cab tilt reservoir location. Reservoir to be located in the [#LOC]. | $626 |
| 1680-0118 | Cold Weather Pkg for Cab. Includes fan clutch and additional insulation on the front wall and insulation on rear cab heater hose lines (if equipped). | $3,056 |
| 1680-0121 | Under the body there shall be equipped with a pair of 12000 lb receiver assemblies each with a removable swivel hoist ring or can be used with a Class III trailer hitch. One each side of apparatus. The receivers shall be locate in front of rear axle. Final location will depend on Engineering and driveline. 12v not included. | $3,490 |
| 1680-0122 | Tow eyes rear below body painted. Eyes to be on edge pointing to rear. | $625 |
| 1680-0126 | Block heater 1000 watt wired through inlet receptacle (or block heater auto eject inlet receptacle if so equipped). | $521 |
| 1680-0127 | Block heater thermostat. | $271 |

| Item No. | Description | |
|---|---|---|
| 1680-0130 | High flow power steering pump. Includes additional cooler. Requires engineering evaluation. Not available in hot climates. | $524 |
| 1680-0131 | Tow eyes rear frame stainless steel. | $1,310 |
| 1680-0136 | Relocate the air governor to the steering reservoir bracket above the driver side frame rail. | $193 |
| 1680-0137 | Diesel Exhaust Fluid (DEF) 10 gallon tank. Location: [#LOC]. | $1,595 |
| 1680-0144 | Trailer hitch class V mounted rear. This hitch has under body support as needed. | $2,565 |
| 1680-0145 | Diesel Exhaust Fluid (DEF) 5 gallon tank. Location: [#LOC]. | $1,513 |
| 1680-0154 | Oil pan heater - Fleetguard 150W/120V wired to block heater receptacle. ISC/ISL only. | $432 |
| 1680-0181 | Oil pan heater - Fleetguard 300W/120V wired to block heater receptacle. ISM only. | $547 |
| 1680-0184 | Existing chassis to be modified to match wheelbase and frame cut of order configuration. | $1,056 |
| 1680-0187 | On-Spot tire chain installation. Requires pre-wire option located in Cab Electrical. Requires engineering review and approval if less than 176" WB. | $2,856 |
| 1680-0189 | Tow eyes front painted mounted in up position. Requires 16" minimum bumper extension on custom chassis and 18" minimum bumper extension on commercial chassis. | $272 |
| 1680-0193 | Tow eyes rear below body stainless steel. | $2,066 |
| 1680-0194 | Tow eyes front stainless steel through bumper / cab (PR). | $944 |
| 1680-0196 | Tow eyes front painted through bumper / cab (PR). | $530 |
| 1680-0217 | Driveline guard (EA). | $311 |
| 1680-0227 | Tow eyes front painted with 3" holes below bumper/cab (PR). | $682 |
| 1680-0228 | Under front bumper Class III hitch receiver. Custom chassis only. | $1,527 |
| 1680-0231 | Insta-chain tire chain installation. Requires pre-wire option located in Cab Electrical. | $2,856 |
| 1680-0237 | Deluxe Trim Package 2DR Extended Cab International. | $4,118 |
| 1680-0239 | Tow eyes rear frame painted mounted low just above tailboard. | $556 |
| 1680-0242 | Cold weather pkg for cab. Includes additional insulation on the front wall and insulation on rear cab heater hose lines (if equipped). | $3,399 |
| 1680-0244 | (2) way rear underbody Class III hitch receiver. Includes Class III trailer receivers (2) side facing- (1) each below rearward body compartments for portable winch receivers with electrical connection for winch. | $1,599 |
| 1680-0245 | Upgrade receiver and tow eye extension. The front bumper 9K winch receiver shall be extended forward approximately 1" beyond front bumper IPOS (rather than at the under bumper location). Custom chassis only. | $756 |
| 1680-0247 | Trailer hitch Class III mounted rear optmized mounting to be in a raised mounting position. | $995 |
| 1680-0249 | Driveline guards (as applicable). | $926 |
| 1680-0250 | Diesel Exhaust Fluid (DEF) 5 gallon tank for 2013 / 2016 EPA engines. Location: [#LOC]. | $1,761 |
| 1680-0251 | Diesel Exhaust Fluid (DEF) 10 gallon tank for 2013 / 2016 EPA engines. Location: [#LOC]. | $1,840 |
| 1680-0252 | OEM chassis step package for Kenworth Commercial Chassis. Includes mounting plate for the battery charger receptacle and air inlet. | $158 |
| 1680-0253 | Fuel tank brush guard. | $709 |
| 1680-0254 | Officer side rear underbody Class III hitch receiver. Includes Class III trailer receiver (1) officer side facing side for portable winch receiver with an electrical connection for winch. | $961 |
| 1680-0258 | Insta-chain tire chain installation. Includes 12 chain sytem. Requires pre-wire option located in Cab Electrical. | $2,982 |
| 1680-0267 | Commercial chassis trim package upgrade to include smooth aluminum plate bolted in place on underside of gator grip over batteries. | $98 |
| 1680-0270 | Smooth plate trim package with black durabak finish for a (4) door International. Includes a full length driver side and a (2) piece officer side trim that will utilize pieces already supplied by the OEM will include modfication for booster reel(s). | $5,429 |
| 1680-0271 | Tow eyes front painted through bumper / cab (PR). Eyes to be 1" thick material. | $530 |
| 1680-0272 | Plumb Vogel lube system to On-Spot tire chains. | $204 |
| 1680-0273 | Additional engine insulation under cab. Includes forward and rearward cab areas. See Engineering for installation instructions. | $1,435 |
| 1680-0274 | On-Spot tire chain installation. Includes 12 chains per wheel. Requires pre-wire option located in Cab Electrical. Requires engineering review and approval if less than 180" WB. | $3,062 |
| 1680-0278 | Deluxe Trim Pkg 4DR Navistar with provision for booster reels. | $4,394 |
| 1680-0279 | Steel tow bar located below rear compartment mounted to chassis frame for towing purposes only painted black. | $1,884 |
| 1680-0280 | Diamond plate trim package for a (4) door International. Includes a full length driver and officer side trim package that will utilize pieces already supplied by the OEM. | $2,790 |
| 1680-0282 | Tow eyes rear below body painted. 1" thick material with 3" diameter hole staight down from chassis frame. | $746 |
| 1680-0283 | Delux diamond plate trim package for (2) door International. Includes full length driver side and officer side trim. | $2,237 |
| 1680-0284 | Radiator mounted power steering cooler. | $493 |
| 1680-0286 | Tow eyes front painted in down position with additional officer only in the up position. | $406 |
| 1680-0287 | Tow eyes front painted bright silver through bumper / cab (PR). | $530 |

| Item No. | Description | |
|---|---|---|
| 1680-0288 | Oil pan heater for ISL engine. Fleetguard 22MM 150W/120V wired to winterization shoreline receptacle. | $494 |
| 1680-0290 | Bevel interior holes of front and rear tow eyes. | $495 |
| 1680-0291 | Tow forks under front bumper extension. | $671 |
| 1680-0292 | Auto lube system CPL. Chassis points only. | $4,457 |
| 1680-0293 | Tow hooks front painted in the outboard position. | $281 |
| 1680-0295 | Trailer hitch Class I receiver mounted rear. | $608 |
| 1680-0297 | Diamond plate trim package for a (2) door International 7600. Includes a full length driver side and an officer side trim that will utilize pieces already supplied by the OEM. To be used with body mounted batteries. | $1,345 |
| 1680-0300 | Steel lift bar located below rear compartment mounted to chassis frame for lifting purposes only (no towing) painted black. | $1,884 |
| 1680-0301 | Cord connector. Daniel Woodhead 3 wire NEMA 5-20 straight blade male located for block heater routed to driver side battery box. | $158 |
| 1680-0302 | Steel tow/lift bar located below rear compartment mounted to chassis frame painted black. | $3,007 |
| 1680-0303 | Splash guard for reel below front of cab. Includes chute to front bumper tray for hose. Hush chassis only. | $867 |
| 1680-0304 | Deluxe Trim Pkg 4DR Navistar with storage compartment on one side and provision for booster reel on the other side. | $4,394 |
| 1680-0306 | Air intake emergency shut-down. Pump panel mounted guarded switch with reset switch located below front bumper. | $1,856 |
| 1680-0307 | 4-ply upper and lower radiator hose ipos. | $73 |
| 1680-0309 | Muncie digital tachometer. Locate display in cab visible to driver. | $698 |
| 1680-0311 | Fan drive w/thermatic clutch permanently engaged. | $1,446 |
| 1680-0314 | LINE-X package for 2 door commercial chassis: Includes chassis trim package all steps mounting plates for electrical components access doors for battery etc as applicable. | $606 |
| 1680-0315 | LINE-X package for 4 door commercial chassis: Includes chassis trim package all steps trim pack compartment doors mounting plates for electrical components access doors for battery etc as applicable. | $1,236 |
| 1680-0318 | 1/4 turn heater valves for cab and body(if equipped). Includes centralized location under cab with mechanically fastened tags. | $623 |
| 1680-0319 | Tow eyes front painted below bumper/cab pointed forward. (PR). Custom chassis only. | $1,886 |
| 1680-0320 | Weather resistant box for tire chain solenoid. | $117 |
| 1680-0321 | Steel tow/lift bar located below front of cab mounted to chassis frame painted black. | $4,787 |
| 1680-0322 | Diamond plate trim package for a (2) door International. Includes a full length driver side and an officer side trim that will utilize pieces already supplied by the OEM. For use with SCR and DEF. | $1,345 |
| 1680-0323 | Diamond plate trim package for a (4) door International. Includes a full length driver side and officer side trim that will utilize pieces already supplied by the OEM. For International cabs with SCR and DEF. | $2,687 |
| 1680-0324 | Deluxe diamond plate trim package for a (4) door International. Includes a full length driver side and officer side trim plus additional storage area(s). For use with International cabs with SCR and DEF. Storage compartments shall be provided below the side rear cab doors and shall include a hinged door with push-button latch and shall include lighting and wired through the cab door ajar indicator per NFPA as space permits. | $4,394 |
| 1680-0327 | Block heater 1500 watt wired through APU. Available on ISM ISX and S60 only. | $533 |
| 1680-0328 | Oil pan heater - Fleetguard 450W/120V wired to APU only. ISX only. | $547 |
| 1680-0331 | Tow eyes front painted job color mounted in up position. Requires 16" minimum bumper extension on custom chassis and 18" minimum bumper extension on commercial chassis. | $405 |
| 1680-0334 | Oil pan heater - Fleetguard 450W/120V wired to block heater receptacle. ISX only. | $547 |
| 1680-0335 | 3M model 2084 sealant between the frame frame liner (if equipped) crossmembers and rear axle suspension brackets to prevent buildup of road salt and dirt and corrosion at all bracket to frame rail and frame to frame rail attachment points. | $887 |
| 1680-0337 | OEM chassis step package for commercial chassis. Includes mounting plate for air and electrical options. | $158 |
| 1680-0338 | Extensions for chassis and cab tilt grease fittings. Extensions to be routed to three groups (left front right front and rear). | $944 |
| 1680-0344 | Tow eyes front painted in down position with additional stainless steel officer only in the up position. | $612 |
| 1680-0349 | Tow eyes rear below body painted. 1" thick material with 3" diameter hole staight down from chassis frame. For use as lifting eyes at rear of chassis. | $1,771 |
| 1680-0351 | All applicable .625" heater hose to have constant torque clamps. Includes end union and T-fittings. | $343 |
| 1680-0353 | Heavy duty frame cross-member located at cab locks. | $987 |
| 1680-0356 | Rope tie off. Side underbody Rope Tie Off. Includes (2) side facing- rope tie off points (1) each below body located per engineering approval. Rating: 1000 lbs with 10:1 safety factor with straight line pull. | $1,915 |

| Item No. | Description | |
|---|---|---|
| 1685-0001 | Cab interior black. Does not include seat color. | $360 |
| 1685-0002 | Cab interior burgundy. Does not include engine cover or seat color. | $2,963 |
| 1685-0003 | Fold down computer tray bolted to engine cover on officer's side. | $767 |
| 1685-0004 | Storage below rear bench seat for four SCBA bottles. | $698 |
| 1685-0008 | Control lanyard Y type for air horns. | $179 |
| 1685-0011 | Stainless steel pair of window bars for rear cab doors. | $391 |
| 1685-0026 | Door Seat Riser Ovrlap drv/off for the Typhoon only. | $203 |
| 1685-0027 | Heater rear cab w/o cover (PR). 23000 BTU ea. | $1,556 |
| 1685-0028 | Heaters rear cab w/covers (PR). | $1,662 |
| 1685-0039 | Window bars stainless steel pair for canopy windows. | $391 |
| 1685-0050 | Modify rear bench seat riser to have storage access from each side for (4) SCBA bottles (2) ea side. Hinge doors as to work best with rear heater locations. | $1,627 |
| 1685-0056 | Heater rear cab w/o cover (PR) and front cab heater with heat to the feet for the driver and officer. | $1,556 |
| 1685-0057 | Heaters cab rear with covers (PR) and front heater with heat to the feet for the driver and officer. | $1,662 |
| 1685-0058 | Interior cab access panel. Driver side of cab for access to rear of shore line receptacle. Panel to be 8" x 8". | $316 |
| 1685-0059 | Locking seat riser door. Driver and officer seat riser doors are to include a locking push-button latch. Key type to be 1250. | $156 |
| 1685-0060 | Louvers in rear bench seat riser. For ventilation. | $161 |
| 1685-0061 | Interior cab access panel. Officer side of cab for access to rear of shore line receptacle. Panel to be 8" x 8". | $316 |
| 1685-0062 | Label package for Memphis units only to include labeling of items behind all removable panels and check loose items in cab warning labor for off side dash and cab tilt access door. | $540 |
| 1685-0063 | Medical glove box. Mount to rear area of engine cover. Includes slotted top for dispensing gloves without opening hinged lid. Box to be same color as interior of cab. Secure lid in closed position with small butterfly latch. | $262 |
| 1685-0064 | Embossed diamond plate foot plates located at driver officer and rear facing seat positions where feet would rest while seated. | $293 |
| 1685-0066 | Officer seat riser storage compartment door to be on front of riser hinged towards engine cover. | $184 |
| 1685-0068 | Rear engine cover diamond plate trim. | $226 |
| 1685-0069 | Hinged interior cab gauge panel in front of driver. Includes (9) gauges- English dominant. Panel to be hinged for access to driver gauge cluster. | $2,205 |
| 1685-0071 | Notch cab wheel well and engine cover to provide 40 inches from rear wall to engine cover | $491 |
| 1685-0072 | There shall be no E-One logos on cab seats. | $2,130 |
| 1685-0073 | Control lanyard Y type or dual single pull as applicable for air horns on a commercial chassis. | $256 |
| 1685-0074 | Communications cabinets (1/8"). 20.5"W x 16"H x 20"D INT (PR). Includes (2) roll out trays and vertically hinged door (1/8") with thumb latch. Location: One each side over cab wheel wells. Includes a smooth plate cover with matching cab finish for customer installed wiring between towers. | $2,699 |
| 1685-0075 | Removable ABS panel 35"H x 4.5"W for officer side cab wall to route communication wires from officer side communication cabinet to officer side dash area. Panel to be attached with screws. | $116 |
| 1685-0078 | Kick Plate in front of the officer to be diamond plate. | $150 |
| 1685-0079 | Tag to indicate Combination Vehicle Weight Gross Axle Weight and Gross Vehicle Weight shall be located in the cab. | $48 |
| 1685-0080 | Embossed diamond plate foot plates located at driver officer and forward facing rear seat positions where feet would rest while seated. | $366 |
| 1685-0084 | 3/16" Aluminum plate on top engine access door. To have swirl finish and be spaced up approx 1/2". | $262 |
| 1685-0085 | Center cab dash electrical panel to be held in place with coin slot style fasteners. | $96 |
| 1685-0086 | Stainless steel scuff plate under interior canopy window. | $348 |
| 1685-0087 | Rear engine cover radio cabinet. Cabinet to have access from the top and from rear with swirl and clear coat finish. | $1,283 |
| 1685-0088 | Removable ABS panel 35"H x 4.5"W for driver side cab wall to route communication wires from driver side communication cabinet to driver side dash area. Panel to be attached with screws. | $116 |
| 1685-0089 | Louvers for officers seat riser. Locate louvers in the front side and door of riser (as applicable). | $354 |
| 1685-0090 | Rear cab headliner to be six pieces IPOS. | $270 |
| 1685-0091 | Mount customer supplied computer tray on engine cover. Includes support plates on the top and bottom. | $235 |
| 1685-0092 | Mount (2) intermediate steps to be bolted-on (one each side) inside the front driver and officer cab step well drawing # 672433 and 672434. | $195 |
| 1685-0093 | Black rubber handrail mounted parallel to seats on rear of engine cover for driver and officer rear facing seats. | $188 |
| 1685-0094 | Storage below rear bench seat. (1) horizontal hinged door on the front of the rear bench seat. | $449 |
| 1685-0095 | Locking rear seat riser door (PR). Seat riser doors are to include a locking push-button latch. Key type to be 1250. | $156 |

| Item No. | Description | |
|---|---|---|
| 1685-0101 | Rear engine cover radio cabinet. Cabinet to have access from the top and from rear with OTO finish. | $698 |
| 1685-0105 | Sun visor strap (PR) with snap fasteners. | $146 |
| 1685-0106 | Rear engine cover radio cabinet. Cabinet to have access from the top and from rear. | $698 |
| 1685-0107 | Interior grab handle rubber covered (2). Locate one each side at interior of rear cab door opening (at rear of opening). | $217 |
| 1685-0108 | Locking seat riser door. Driver and officer seat riser doors are to include a locking push-button latch. Key type to be CH-751. | $83 |
| 1685-0109 | Locking rear seat riser door (PR). Seat riser doors are to include a locking push-button latch. Key type to be CH-751. | $83 |
| 1685-0110 | Storage below rear bench seat for two SCBA bottles (one each side). | $698 |
| 1685-0111 | Rear cab interior wall overlay with swirl and clear coat finish. | $705 |
| 1685-0112 | Integrated Roll Sensor (IRS) for RollTek air bag system. | $2,261 |
| 1685-0113 | Integrated roll sensor slave module for RollTek air bag system. | $1,052 |
| 1685-0114 | Integrated Head Curtain (IHC) for RollTek air bag system. | $636 |
| 1685-0115 | Integrated Belt Pretensioner (IBP) for RollTek air bag system. | $370 |
| 1685-0116 | Interior grab handle rubber covered (2). Locate one each side at interior of front cab door opening (at rear of opening). | $217 |
| 1685-0117 | Rear cab interior wall overlay with Zolatone finish. | $459 |
| 1685-0118 | Pump operator panel on rear wall of cab. For use with Class 1 TME pump panel. Final design to be determined by E-ONE Applications and Chassis Engineering and with Class 1. | $2,139 |
| 1685-0119 | 3/16" Aluminum plate on top engine cover forward of access door. To have swirl finish and be spaced up approx 1/2". | $262 |
| 1685-0120 | Rear cab interior wall overlay with diamond plate finish. | $577 |
| 1685-0121 | Flat bar (.5" x 2") installed on rear cab wall up high with full length shelf track. | $324 |
| 1685-0126 | SCBA Storage tubes (4) horizontally mtd (2) each side in lower rear cab compartments above floor level. | $814 |
| 1685-0127 | Locate rear cab heaters below front of rear wall seat riser(s). Includes louvers for ventilation. | $381 |
| 1685-0131 | Reinforcement plate(s) behind lower rear cab wall padding. TME only. | $601 |
| 1685-0134 | Embossed diamond plate foot plates located at each seating position where feet would rest while seated. | $293 |
| 1685-0135 | Hot climate insulation package. Includes insulation for ceiling front wall rear wall side walls below seat risers and in doors. | $2,388 |
| 1685-0136 | Storage in rear wall free standing seat riser. (1) horizontal hinged door on the front of the free standing seat riser. | $348 |
| 1685-0137 | Console Remote Control Panel between Driver and Officer for remote control Bumper Turret Pump Control and switchs. | $876 |
| 1685-0138 | 3/16" Aluminum plate on top engine cover forward of access door. Finish to match cab interior and be spaced up approx 1/2". | $262 |
| 1685-0139 | 3/16" Aluminum plate on top engine access door. Finish to match cab interior and be spaced up approx 1/2". | $262 |
| 1685-0140 | Storage at rear engine cover w/ cargo net top. (3) sided storage approx. 44.5"W x flush with upper engine cover high x sloped area of engine cover deep. Storage area to match cab interior. | $764 |
| 1685-0146 | Extended electrical access panel in cab. Panel to extend up to allow for radio/equipment installation. | $602 |
| 1685-0147 | Narrow rear cab wall support channel. Not available with rear wall seating. | $223 |
| 1685-0153 | Storage below rear bench seat. (2) horizontally hinged doors on the front of the rear bench seat. | $897 |
| 1685-0154 | Communications cabinets (1/8"). 20.5"W x 16"H x 20"D INT (PR). Includes (2) roll out trays and cargo netting over openings. Location: One each side over cab wheel wells. Includes a smooth plate cover with matching cab finish for customer installed wiring between towers. | $2,699 |
| 1685-0155 | Cold climate insulation package. Includes insulation for ceiling front wall rear wall side walls below seat risers and in doors. | $2,388 |
| 1685-0156 | Command desk rear engine cover 5"H x 17"D x full width between medical cabinets. Desk to include hinged aluminum lid with lexan overlay and gas shock trigger latches 1" return lip on lid and 1" back splash. Desk to be mounted 26" off of floor with finish to match cab interior. | $2,263 |
| 1685-0157 | Dash label "Switch Compression Brake Off for Wet or Slippery Road Conditions". | $50 |
| 1685-0161 | Severe duty dash package. Includes smooth plate alum center and officer side dash painted to match cab interior and lower dia plt kick panels. | $963 |
| 1685-0162 | Severe duty engine cover. Includes floor type matting on sides top forward and top rearward engine covers with sanded finish smooth aluminum trim. | $1,043 |
| 1685-0164 | Severe duty engine cover. Includes floor type matting on sides top forward and top rearward engine covers with smooth aluminum trim painted to match cab interior. | $1,225 |
| 1685-0165 | Storage below rear bench seat. (1) horizontally hinged door on the front of the rear bench seat. Hinge hardware mounted with acorn nuts outside. | $449 |
| 1685-0172 | Storage below rear bench seat. (1) hinged door on each front corner of the bench seat base. | $856 |
| 1685-0174 | Louvers for rear bench seat riser. Locate louvers on each side of riser. | $354 |

| Item No. | Description | |
|---|---|---|
| 1685-0180 | On Scene Solutions Talon helmet holder (EA). Location: [#LOC]. | $409 |
| 1685-0181 | Pump operator panel on rear wall of cab. For use with TME pump panel. Final design to be determined by E-ONE Applications and Chassis Engineering | $2,139 |
| 1685-0182 | Severe duty dash package. Includes smooth plate alum center officer side dash and lower kick panels; all painted to match cab interior. | $963 |
| 1685-0183 | Heater cab with heat to the feet for the driver and officer | $812 |
| 1685-0184 | Heater rear cab w/o cover. Includes 110V blower. | $1,292 |
| 1685-0185 | Locking rear seat riser door. Seat riser door to include a locking push-button latch. Key type to be 1250. | $156 |
| 1685-0188 | Stainless steel trim low on officer side of engine cover (to match driver side). CII / Typhoon only. | $134 |
| 1685-0189 | Identification plate GSA units. Located on inside of driver's door. Exact information and wording to be determined at time of final inspection. See specification. | $285 |
| 1685-0191 | Diamond plate cover for battery charger/air compressor. Includes louvers for ventilation. | $228 |
| 1685-0192 | PAC TRAC panels vertical stacked with tool mounting grooves orientated horizontal on back wall of cab each side outboard of bench seat. | $1,490 |
| 1685-0193 | Slide-out MDT mount officer cab dash. Requires severe duty dash w/MDT notch. | $1,092 |
| 1685-0194 | Officer cab dash modification for Havis slideout MDT bracket. Not available with heat to feet or side roll protection. | $472 |
| 1685-0196 | Severe duty Quest officer dash package. Includes smooth plate alum officer side dash with trim panel painted to match cab interior and lower dia plt kick panel. | $402 |
| 1685-0197 | Rear upper cab interior wall 3/16" overlay with Zolatone finish. Approximately 20" high. | $368 |
| 1685-0199 | Rear engine cover brushed stainless steel trim. | $475 |
| 1685-0200 | (No longer used. Please see 1685-0193) Slideout MDT mount officer cab dash. Requires severe duty dash w/ MDT notch. Not available with heat to the feet. | $636 |
| 1685-0201 | Severe duty dash package. Includes smooth plate alum center and officer side dash painted to match cab interior and lower dia. plt. kick panels. Officer cab dash notched for MDT slide-out bracket(s). | $1,173 |
| 1685-0204 | Side mount telescopic computer tray bolted to engine cover on officer's side. | $949 |
| 1685-0205 | Storage at rear engine cover w/ drop down rear door. (3) sided storage approx. 44.5"W x flush with upper engine cover high x sloped area of engine cover deep with (2) equally spaced vertical dividers. Storage area to match cab interior. | $764 |
| 1685-0207 | Cup holders; severe duty dash. (1) each side facing of center electrical cover; driver offset rearward officer offset forward. Holders to match cab interior. | $236 |
| 1685-0219 | Interior grab handle rubber covered (2). Locate one each side at interior of rear cab door opening (at front of opening). | $217 |
| 1685-0221 | Severe duty dash package. Includes smooth plate alum center and officer side dash painted to match cab interior and lower dia plt kick panels. Officer cab dash notched with recessed glove box. Includes angled notepad holder on top. Not available with Rolltek. | $1,416 |
| 1685-0222 | Storage at lower rear engine cover w/ cargo net top. Approx. 30"W x 12"H x sloped area of engine cover deep. Storage area to match cab interior. | $764 |
| 1685-0223 | Storage at rear engine cover w/ lift-up door. Storage approx. 44.5"W x flush with upper engine cover high x sloped area of engine cover deep. Storage area to match cab interior. | $764 |
| 1685-0224 | [#COL] vinyl cover for steering wheel shaft at driver's position. | $52 |
| 1685-0225 | Storage at rear engine cover w/ lift-up door. Storage approx. 37.5"W x flush with upper engine access cover high x 34" deep (front to rear). Includes forward 12" stationary cover. Storage area to match cab interior. | $1,059 |
| 1685-0234 | Cup holders; severe duty dash. (1) each side of forward engine cover. Holders to match cab interior. | $236 |
| 1685-0235 | Foot switch Linemaster model 632S to control air horns located [#LOC]. Includes 25 degree diamond plate bracket. | $120 |
| 1685-0238 | Insulation - front cab wall. Includes insulation on rear cab heater hose lines (if equipped). | $108 |
| 1685-0239 | Cab floor to be overlayed with 1/8" embossed aluminum diamond plate; front and rear. Single piece with no gaps around perimeter. | $954 |
| 1685-0240 | Slide-out MDT mount officer cab dash with dock. Requires severe duty dash w/MDT notch. Not available with heat to the feet. | $1,497 |
| 1685-0242 | Officer seat riser storage compartment door to be hinged to the rear. | $112 |
| 1685-0243 | Pac Trac panels vertically stacked on back wall of cab each side outboard of medical cabinet. | $1,490 |
| 1685-0244 | Mechanical fastners ipos for headliners. | $189 |
| 1685-0247 | Cab floor to be overlayed with 1/8" embossed diamond plate; front and rear. Single piece with no gaps around perimeter. Front plates to be sand blasted to remove shine. | $1,140 |
| 1685-0248 | Storage box with diamond plate hinged top with push-button latch. Box to be mounted on floor centered of rear wall. Size: 36H x 40W x 20D. Finish to match can interior (excluding lid). Includes compt light to match body package. | $1,452 |
| 1685-0251 | Diamond plate cover to protect the steering wheel shaft/knuckle. | $222 |

| Item No. | Description | |
|---|---|---|
| 1685-0254 | Storage box locking mounted on the rear lower engine cover. Engine cover lock box measures 18x24x9 with a lift top lid and a locking latch. Finish will match cab interior. | $871 |
| 1685-0258 | SCBA rear wall peg tool board mount for three (3) Lifeguard Smart Dock 2 SCBA brackets. The "peg board" SCBA tool board shall be mounted between the two (2) rear outboard seats with adequate room between each pack to mount complete SCBA packs. Peg board sizing shall be approximately 40" wide X 35" high and shall be spaced off the rear wall approximately 1". The peg board shall be finished with Zolotone. | $2,583 |
| 1685-0261 | Storage below rear bench seat. (1) cargo net (black) on each side of the bench seat to gain access to storage area. | $622 |
| 1685-0262 | Storage below rear bench seat for two SCBA bottles (driver side). Officer side to be open storage w/ door. | $698 |
| 1685-0263 | Severe duty dash package. Includes smooth plate alum center and officer side dash and lower kick panels; all painted to match cab interior. Officer cab dash notched for MDT slideout bracket(s). | $1,173 |
| 1685-0265 | Smooth plate cover(s) for battery charger and air compressor. These cover's shall be painted to match cab interior and shall include louvers as required for ventilation. | $228 |
| 1685-0266 | Bolt-in partition wall. Locate under bench seat centered between driver and officer side. | $227 |
| 1685-0267 | Modify rear bench seat riser to have storage access from each side for up to (2) 20lb ABC extinguishers (1) ea side. | $1,410 |
| 1685-0269 | Storage box approximately 11" wide x 10" high x 26" deep made from 1/8" diamond plate aluminum centered on to rear cab floor. The box shall cradle (1) 2.5 gallon water fire extinguisher. The door shall be hinged with push button latches to provide easy access to the extinguisher in its stowed position stored at a slight incline within the box. | $671 |
| 1685-0271 | Embossed diamond plate foot plates painted with black Durabak located at each seating position where feet would rest while seated. | $412 |
| 1685-0272 | Cup holder (PR) with shallow tray located at front center of engine cover. Polyurethane construction for use with severe duty engine cover only. | $122 |
| 1685-0273 | KNOX-BOX MedVault 2 model 5520H3S2-4. Includes E-ONE installed wiring to battery hot. Location: rear wall of medical cabinet. Top of compartment right hand side forward facing. Requires dept to purchase software package from KNOX-BOX (if they do not already have it). | $2,707 |
| 1685-0274 | Plate aluminum 1/8" outboard of medical cabinet rear wall between extrusions behind padding. Plate to run from ceiling down to rear cab support bracket. | $222 |
| 1685-0275 | Cup holder (PR). Polyurethane construction for use in Typhoon and CII with severe duty engine cover only. Location: [#LOC]. | $149 |
| 1685-0279 | Chrome grab handle. Locate (1) on the engine cover centered between latches. | $116 |
| 1685-0281 | Control lanyard type officer side only for air horns. | $179 |
| 1685-0282 | Slideout MDT mount officer cab dash with dock (Havis DS-PAN-111 C-MD-105-Z C-HDM-135). Requires severe duty dash w/ MDT notch. Not available with heat to the feet. To include 12 VDC electrical outlet wired to battery hot. | $1,897 |
| 1685-0283 | Pac Trac panels vertically stacked on back wall of cab. | $1,490 |
| 1685-0284 | Raceway across lower engine cover; full width of cover. Painted to match cab interior. | $220 |
| 1685-0285 | Cup holder / tray for engine cover painted to match cab interior. Approx 14" wide x 10" long with tapered front corners and cup holders at each rear corner. For use in Typhoon and CII with severe duty engine cover. | $417 |
| 1685-0286 | Control lanyard Y type for air horns. Aircraft style cable (1/8" wire cable covered with clear plastic/nylon tubing) shall be used IPOS. | $230 |
| 1685-0287 | Rear engine cover trim 1/8" smooth aluminum painted to match cab interior and spaced up 1/2". Includes both horizontal surfaces and angle vertical surface between horizontal surfaces. | $475 |
| 1685-0289 | Foot switch Linemaster model 632S to control Q2B siren located [#LOC]. Includes 25 degree diamond plate bracket. | $120 |
| 1685-0290 | Pac Trac panels vertically stacked on back wall of cab between forward facing outboard seats. | $1,490 |
| 1685-0291 | 4Front air bag system with steering wheel bag driver knee bag and officer knee bag. Requires RollTek option. | $4,504 |
| 1685-0292 | Mount for bumper turret joystick to allow use by driver or officer. Locate on forward engine cover. | $349 |
| 1685-0295 | The rear wall support channel shall not include pre-punched holes for optional seating not contained within this order. | $55 |
| 1685-0296 | Severe duty dash package. The officer side dash shall be lowered 2.5" below its standard height. Includes smooth plate alum center and officer side dash painted to match cab interior and lower dia. plt. kick panels. Officer cab dash notched for MDT slide-out bracket(s). The notch position shall not be modified (only the officer side dash top). Not available with heat to the feet. | $1,332 |
| 1685-0297 | Storage at rear engine cover w/ lift-up door. Storage approx. 36"W x flush with upper engine cover high x sloped area of engine cover deep. Storage area to match cab interior. | $727 |

| Item No. | Description | |
|---|---|---|
| 1685-0298 | The cab floor shall have the pre-punched holes for the accelerator and brake pedals modified. All brake and accelerator pedal hole cutout(s) necessary shall not be visible after the pedals have been mounted in place. | $108 |
| 1685-0300 | Hook(s) stainless steel shall be provided in the cab. Location: within easy reach of the driver's seated position. | $74 |
| 1685-0301 | Access below top mount enclosed pump panel on rear wall of cab for access to pump compartment. | $322 |
| 1685-0302 | Insulation - front pump compartment access door. | $108 |
| 1685-0307 | Cup holder / tray enlarged for engine cover painted to match cab interior. Approx 19" wide x 12" long with tapered front corners and cup holders at each rear corner. For use in Typhoon and CII with severe duty engine cover. | $449 |
| 1685-0308 | Riser rear bench seat with provisions for rear wall heaters (if equipped). For use with flip-up seats. | $1,465 |
| 1685-0312 | Locking thumb latch on DEF tank door ipos. | $70 |
| 1685-0313 | Smooth plate cover for battery charger. Includes louvers for ventilation. Cover to match cab interior. | $228 |
| 1685-0314 | Officer wheel well cabinet (1/8"). 20.5"W x 14"H x 20"D INT. Includes (1) roll out tray with 8" sides. Rear opening will have cargo netting. Includes 1" lip around perimeter of top. | $1,341 |
| 1685-0315 | Storage below rear bench seat. (1) hinged door on each side of the bench seat. The hinge shall be mounted on the forward edge of the opening each side. | $622 |
| 1685-0318 | Rear lower engine cover mounted storage box. To be approx. 44" W x 8" H x 12" D. Includes (1) centered (front to rear) divider. Includes cargo net cover. | $979 |
| 1685-0320 | Storage at rear engine cover w/ cargo net top. (4) sided storage approx. 44.5"W x 3" upper (13" lower) deep x 21" front to rear. ISX engines only. Storage area to match cab interior. | $764 |
| 1685-0321 | Divider below rear bench seat (PR). Requires side access doors. Location: (1) each side of front access door. | $358 |
| 1685-0322 | Storage at lower rear engine cover w/ cargo net top. Approx. 30"W x 8"H x 12" deep with a center divider (front to rear). Storage area to match cab interior. | $764 |
| 1685-0324 | Storage at lower rear engine cover w/ lift up door and dividers for 3" binders. Approx. 24"W x 14"H x 12"D. Storage area to match cab interior. | $764 |
| 1685-0326 | Edge trim on top perimeter of map pockets. | $55 |
| 1685-0329 | Map pockets aluminum plate painted to match cab interior (PR). Includes vinyl trim around top of opening and nylon strap with snap to retain contents. Locate pockets one each side on front wall of rear access map box between driver and officer. | $422 |
| 1685-0330 | Pac Trac panels vertical stacked on back wall of cab officer side outboard of seat(s). | $746 |
| 1685-0331 | Rear engine cover radio cabinet. 8"H x 44"W x 12"D (lower); ISC/ISL engines only. Includes lift-up door with gas shock locking thumb latches and louvers. Finish to match cab interior. | $698 |
| 1685-0332 | Interior access panel of cab roof antenna. Location: driver side forward officer side forward and officer side rearward. | $155 |
| 1685-0333 | 3/16" aluminum plate on top engine cover forward of access door approx. 32"W x 12.5"L. Finish to black Durabak and be spaced up approx 1-1/4". Not available with cup holders. | $282 |
| 1685-0335 | Rear engine cover swirl smooth plate (not clear coat) trim spaced 2" off cover. Includes lower horizontal surface and angle vertical surface between horizontal surfaces. | $565 |
| 1685-0336 | Storage below rear bench seat for two SCBA bottles (officer side). Driver side to be open storage w/ door. | $698 |
| 1685-0337 | Riser rear seat(s) with transverse. For use with side access ALS and flip-up ABTS seats. Transverse to be used for backboard storage. | $1,465 |
| 1685-0338 | Severe duty dash package with low profile center and officer side dash. Includes smooth plate alum center and officer side dash painted to match cab interior and lower dia plt kick panels. | $1,116 |
| 1685-0339 | Lower exterior cab steps to be equipped with Bustin Industries Type M stainless steel overlay in lieu of Gator Grip. Includes (6) 3/4" drain holes on the lower steps. | $1,024 |
| 1685-0341 | Diamond plate power strip cover (ea). | $155 |
| 1685-0343 | Storage at lower rear engine cover w/ cargo net top. Approx. 44"W x 8"H x 12" deep with (2) dividers (front to rear). Storage area to match cab interior. | $764 |
| 1685-0346 | Storage cabinet mounted on the officer wheel well offset forward toward officer seat 15.5X24X21. Includes rear facing cargo netting. | $1,038 |
| 1685-0347 | Bolt-in partition wall. Locate rear of driver seat approx. 21"W x 24"H. | $227 |
| 1685-0349 | PAC TRAC panels vertical stacked with tool mounting grooves orientated horizontal each side backwall of outboard medical cabinets. | $1,047 |
| 1685-0350 | Diamond plate storage at rear engine cover w/ drop down rear door. Approx. 41"W x flush with upper engine cover high x sloped area of engine cover deep. | $764 |
| 1685-0353 | Divider below rear bench seat; adjustable. Requires side access doors. | $358 |
| 1685-0355 | Storage below rear bench seat. (1) cargo net (black) on each side of the bench seat to gain access to storage area. Includes snaps on top and bungee cord on bottom | $622 |
| 1685-0356 | Writing surface cab dash finished same as cab interior. Location: Mount at final inspection. | $212 |

| Item No. | Description | |
|---|---|---|
| 1685-0357 | Rear cab interior wall overlay plates with Zolatone finish each side outboard of rear seating. Approx. 15"W x 32"H. | $294 |
| 1685-0358 | Storage at lower rear engine cover w/ lift-up door (ISL only). Storage approx. 44.5"W x 15"H x 12"D. Storage area to match cab interior. | $764 |
| 1685-0360 | Recessed storage area in front cab floor between driver and officer. | $647 |
| 1685-0361 | Interior access panel of cab roof antenna. Location: driver side forward driver side rearward officer side forward and officer side rearward. | $155 |
| 1685-0362 | Cab floor overlays. Front and rear cab floors to be overlayed with diamond plate painted with black Durabak. Single piece with no gaps around perimeter. | $1,270 |
| 1685-0363 | Locking seat riser door. Officer seat riser door is to include a Simplex model 9672C-20-260-41 combination lock with satin chrome finish and black trim ring. Not available with air or electric seats. | $372 |
| 1685-0364 | Recessed access panel in MDT notch on officer side cab dash. Approx. 8" x 8". | $212 |
| 1685-0365 | Air ride seat pull down (S4) for RollTek air bag system. | $984 |
| 1685-0366 | Side Rollover Airbag (SRA) for RollTek air bag system. | $636 |
| 1685-0367 | Diamond plate tray rear engine cover. Approximately 43"W x 7.5"D x 2.5"H. Included strap over center of tray. | $410 |
| 1685-0368 | Pair of 36" handrails located inside driver and officer rear door on rear interior wall. Not available with outboard rear wall seats. | $412 |
| 1685-0369 | Severe duty dash package with low profile officer side dash. Includes smooth plate alum center and officer side dash and lower kick panels; all painted to match cab interior. | $1,173 |
| 1685-0370 | Bolt-in partition wall. Locate under bench seat side to side at pass-thru area of riser height compartments. | $227 |
| 1685-0371 | Overhead console flange re-inforcement. Includes driver and officer side consoles. | $108 |
| 1685-0372 | Map pocket rear cab console aluminum plate to match console finish. | $107 |
| 1685-0373 | Transverse riser height area for use with exterior riser height compartments and fold down/flip up seats (if equipped). | $397 |
| 1685-0374 | Stack-On model PS-514-12 gun safe. Location: centered on top of rear wall medical cabinet. | $320 |
| 1685-0377 | Fixed back wall mounted swirled overlay. Overlay to be spaced off wall approx. half inch. Location(s): center rear wall of cab full height above seat support channel x engine cover width. | $271 |
| 1685-0379 | Officer overhead panel painted FLNA4006 white. | $193 |
| 1685-0380 | Storage above rear wall medical cabinet w/ cargo net sides. Approx. 32"W x 22"H x 24" deep. Storage area to match cab interior. | $764 |
| 1685-0381 | 1/8" aluminum plate on top engine cover forward of access door approx. 32"W x 12.5"L. with 1" lips around perimeter. Finish to match cab interior and be spaced up approx 1". Not available with cup holders. | $445 |
| 1685-0382 | PAC TRAC panels vertical stacked with tool mounting grooves orientated horizontal each side backwall of outboard of fold down seats. | $1,047 |
| 1685-0383 | Upper vista wedge on driver side wheel well medical cabinet. Includes rear facing cutout 9.5H x 12.5W centered approx 1.25" up from bottom with cargo netting. Wedge to match cab interior. | $522 |
| 1685-0384 | Interior access panel of cab roof antenna. Location: driver side forward and officer side forward. | $155 |
| 1685-0385 | Fixed back wall mounted swirled overlay. Overlay to be spaced off wall approx. 0.5". Location(s): driver side rear wall of cab outboard of rear wall seats full height above seat support channel. | $271 |
| 1685-0386 | Storage at upper rear engine cover between 3x3s w/ cargo net top. Approx. 34"W x 12.5"H x 12.5" D. Includes center divider (front to rear) and (2) side to side dividers in each storage area for a total of (6) slots. | $734 |
| 1685-0387 | LINE-X package: Cab floor overlays shall be coated with LINE-X. | $514 |
| 1685-0389 | Cup holders; severe duty dash. (1) metal to match cab interior driver forward engine cover (1) polyurethane on officer dash. | $236 |
| 1685-0390 | Storage at rear engine cover w/ drop down rear door. (3) sided storage approx. 44.5"W x flush with upper engine cover (access door) high x approx. 22"D(upper)12"D(lower). Storage area to match cab interior. Door to be provided with cable hold open on each side. | $764 |
| 1685-0391 | Storage at rear engine cover w/ lift-up door. Storage approx. 23"W x 13"H x 10"D. Storage area to match cab interior. | $727 |
| 1685-0393 | Control lanyard type driver side only for air horns. | $179 |
| 1685-0397 | Manual cab tilt pump handle located adjacent to pump with cable tether. | $55 |
| 1685-0399 | Front engine cover trim 1/8" sanded smooth plate spaced 1/2" off cover. Full cover over angled sides and foward of access door. | $588 |
| 1685-0400 | Pac Trac panels vertical stacked on back wall of cab driver side outboard of seat(s). | $746 |
| 1685-0401 | LINE-X package: Cab engine cover overlay trim shall be coated with LINE-X. | $514 |
| 1685-0402 | Storage at rear engine cover w/ cargo net rear opening. Storage approx. 44.5"W x flush with upper engine cover high x sloped area of engine cover deep. Storage area to match cab interior. | $764 |
| 1685-0403 | Cup holders; severe duty dash for use in Typhoon and CII with severe duty engine cover only. Location: [#LOC]. Holders to match cab interior. | $236 |

| Item No. | Description | |
|---|---|---|
| 1685-0404 | Cab steps and bolt-on steps (if applicable) to be equipped with Bustin Industries Type M stainless steel overlay in lieu of Gator Grip. | $1,732 |
| 1685-0405 | Chrome grab handle (PR). Locate (1) each side vertically mounted on rear facing seat riser(s) inboard. | $116 |
| 1685-0409 | Storage cabinet center rear crew area. Box to be installed from behind upper rear engine cover to rear wall with open sides and (1) fixed shelf at lower rear engine cover level. Sides will be provided with cargo net covers. Handrails provided on each side top of cabinet. Cabinet to match cab interior. | $2,942 |
| 1685-0410 | Drug box with PharmGuard climate control system. Construction is of aluminum and an integral design utilizing the cab rear wall medial cabinet. Drug box interior area shall be lined with Dynamat insulation. Design shall include thumb style lever latches with a single Simplex combination lock centered between the thumb style latches and a front drop down hinged access door. Finish to match cab rear wall mdeical cabinet interior. Locate: Inside cab rear wall medical cabinet at floor level. PharmGuard shall be located on the officer side of the box and protrude thru the side of the rear cab wall mounted medical cabinet as required to accommodate venting and control access. | $5,206 |
| 1685-0411 | Storage cabinet center rear crew area. Box to be installed from behind upper rear engine cover to rear wall with open sides and (1) fixed shelf at lower rear engine cover level. Sides will be provided with cargo net covers. Cabinet to match cab interior. | $2,794 |
| 1685-0412 | Cab interior gray with black driver dash only. Does not include engine cover or seat color. | $248 |
| 1685-0413 | Rear engine cover diamond plate trim. Each area to be individual plate spaced 1/2" off of cover. Total of (5) plates. | $503 |
| 1685-0414 | Storage at rear engine cover w/ lift-up door. Storage approx. 42.5"W (for use with ABTS seats) x flush with upper engine cover high x sloped area of engine cover deep. Storage area to match cab interior. | $764 |
| 1685-0415 | Cab interior wheel well risers angled and pushed as far forward as possible to match lower rear engine cover. | $1,493 |
| 1685-0416 | KNOX-BOX MedVault 2 model 5520H3S2-4. Includes E-ONE installed wiring to battery hot. Location: above officer side wheel well medical cabinet facing rear. Requires dept to purchase software package from KNOX-BOX (if they do not already have it). | $2,707 |
| 1685-0417 | Radio cabinet above driver side wheel well medical cabinet. 6"H x 19"W x 28"D. Includes removable top with locking thumb latches and louvers on side walls. Finish to match cab interior. | $698 |
| 1685-0419 | Reduced profile rear engine cover for increased legroom. Not available with rear engine cover options. | $119 |
| 1685-0420 | Officer seat riser storage opening to be provided with cargo netting in place of standard door. | $109 |
| 1685-0421 | 3/16" Aluminum plate on top engine cover forward of access door approx. 22"W x 11"D offset to officer side. Finish to match cab interior and be spaced up approx 1/2". Not available with cup holders. | $310 |
| 1685-0422 | Severe duty overhead console. Includes front full width overhead air conditioning plenum and rear facing blower. Overhead to match cab interior. | $2,413 |
| 1685-0423 | Driver side severe duty dash. Includes driver side aluminum upper dash to match cab interior with ABS gauge cluster. CIIX and TyphoonX cabs only. | $360 |
| 1685-0424 | Rear cab interior wall overlay plates with Zolatone finish each side outboard of rear seating. Approx. 24"W x 36"H. | $294 |
| 1685-0425 | Panel blank and housing cutout for severe duty dash upper tier. Includes: dash housing to be cutout behind panel overlay area. Color: Black. | $346 |
| 1685-0426 | Severe duty dash package with low profile center and officer side dash. Includes smooth plate alum center officer side dash and lower kick panels; all painted to match cab interior. | $1,116 |
| 1685-0427 | (3) severe duty dash upper tier blank panels (as applicable with other options in upper tier; ship additional panel(s) loose). Includes: dash housing to be cutout behind panel overlay areas. Color: Black. | $381 |
| 1685-0429 | Severe duty overhead console. Includes driver center and officer overhead and defrost only plenum. Overhead to match cab interior. | $1,886 |
| 1685-0430 | Heavy Duty interior panels includes: all ceilings panels back wall and side walls to be .125" aluminum smooth plate painted to match cab interior. Requires additional insulation for cab interior. | $1,640 |
| 1685-0431 | Storage below rear facing seat riser (PR). | $425 |
| 1685-0432 | Map pocket(s) aluminum plate painted to match cab interior. Includes vinyl trim around top of opening and nylon strap with snap to retain contents. Locate pocket(s) on front wall of rear access map box/medical cabinet between driver and officer. | $422 |
| 1685-0433 | Smooth plate cover for air compressor. Includes louvers for ventilation. Cover to match cab interior. | $228 |

| Item No. | Description | |
|---|---|---|
| 1685-0434 | Storage cabinet center rear crew area. Box to be approx. 26.5" tall installed from behind upper rear engine cover to rear wall with open sides and (1) fixed shelf at lower rear engine cover level. Sides will be provided with cargo net covers. Handrails provided on each side top of cabinet. Cabinet to match cab interior. | $2,942 |
| 1685-0436 | 3/16" Aluminum plate with sanded finish on top engine cover forward of access door. To have peg board design and be spaced up approx 1/2". | $310 |
| 1685-0438 | Divider(s) below rear bench seat to protect back of heaters from pass-thru (if equipped). | $358 |
| 1685-0439 | Diamond plate cover for PharmGuard climate control system. Includes ventilation as requrired. | $228 |
| 1685-0440 | Storage below rear bench seat. Cargo netting cover on the front of the rear bench seat. | $569 |
| 1685-0443 | LINE-X package: Lower front cab dash kick panels shall be coated with LINE-X. Requires severe duty dash. | $514 |
| 1685-0444 | Drug box with PharmGuard climate control system. Construction is of aluminum and an integral design utilizing the cab rear wall medial cabinet. Drug box interior area shall be lined with Dynamat insulation. Design shall include thumb style lever latches with a single Simplex combination lock centered between the thumb style latches and a front drop down hinged access door. Finish to match cab rear wall mdeical cabinet interior. Locate: Inside cab rear wall medical cabinet below roll-up door drum. PharmGuard shall be located on the driver side of the box and protrude thru the side of the rear cab wall mounted medical cabinet as required to accommodate venting and control access. | $5,206 |
| 1685-0445 | Officer side cab dash access door. Includes louvers and push button latch. | $257 |
| 1685-0446 | Severe duty overhead console. Includes driver center and officer overhead ahead of air conditioning plenum. Overhead to match cab interior. | $1,358 |
| 1685-0447 | Drug box with PharmGuard climate control system. Construction is of aluminum and an integral design utilizing the cab rear wall medial cabinet. Drug box interior area shall be lined with Dynamat insulation. Design shall include thumb style lever latches with a single Simplex combination lock centered between the thumb style latches and a front drop down hinged access door. Finish to match cab rear wall mdeical cabinet interior. Locate: Inside cab rear wall medical cabinet below roll-up door drum. PharmGuard shall be located on the driver side of the box and protrude thru the side of the rear cab wall mounted medical cabinet as required to accommodate venting and control access. | $5,206 |
| 1685-0449 | 3/16" aluminum plate on top engine cover forward of access door approx. 32"W x 12.5"L. Finish to match cab interior and be spaced up approx 1/2". Not available with cup holders. | $282 |
| 1685-0452 | Storage below rear bench seat. (1) hinged door on officer side of the bench seat. | $311 |
| 1685-0455 | Storage above driver wheel well medical cabinet w/ rear facing opening and cargo netting. Approx. 22"W x 16"H x 28" deep. Storage area to match cab interior. | $764 |
| 1685-0456 | Storage above officer wheel well medical cabinet w/ rear facing opening and cargo netting. Approx. 22"W x 16"H x 28" deep. Storage area to match cab interior. | $764 |
| 1700-0001 | Alternators Leece Neville dual 270 amp. 480 amp NFPA/540 amp SAE rating. Available only on ISX12 and Detroit EGR Series 60 engines. | $3,893 |
| 1700-0002 | Alternator Niehoff 250amp. (250 amp SAE/240 NFPA rating). Not available on Cummins ISC or Detroit Diesel engines. | $2,507 |
| 1700-0003 | Alternator Leece Neville 270 amp SAE 240 amp NFPA rating. | $2,046 |
| 1700-0004 | Alternator Niehoff 290 amp (290 amp SAE/265 NFPA rating). Not available on Cummins ISC ISL or Detroit Diesel engines. | $3,818 |
| 1700-0005 | Alternator Leece Neville 320 amp. 320 amp SAE/275 amp NFPA. | $3,308 |
| 1700-0006 | Alternator Niehoff 400amp (400 Amp SAE/385 NFPA rating). Cyclone II w/Cummins ISM. Not available on Detroit Diesel Engines Recycle requires Eng. Review. | $5,790 |
| 1700-0008 | Alternator Leece Neville dual 320 amp. 560 amp NFPA/540 amp SAE rating. Available only on ISX12 and Detroit EGR Series 60 engines. | $5,352 |
| 1700-0009 | Alternator Niehoff 300 amp (300 amp SAE/270 NFPA rating). Available only on ISX12 and Detroit EGR Series 60 engines. | $3,311 |
| 1700-0010 | Noise filter for Leece Neville alternator. | $217 |
| 1700-0012 | Alternator Niehoff 430 amp (430 Amp SAE/380 NFPA rating). Available on Cummins ISX12 only. | $4,567 |
| 1700-0016 | Alternator Niehoff 350 amp (350 amp SAE/320 NFPA rating). Available on Cummins ISM. | $3,818 |
| 1700-0017 | Noise filter for Neihoff alternator. | $220 |
| 1700-0018 | Alternator Delco Remy 300 amp. 300 amp SAE/264 amp NFPA. | $3,243 |
| 1700-0019 | Alternator Niehoff 360 amp (360 amp SAE/320 NFPA rating). Available only on ISX12 and ISX15. | $3,311 |
| 1700-0020 | Alternator Niehoff (400 Amp SAE/385 NFPA rating). Cyclone II w/Cummins ISM. Not available on Detroit Diesel Engines Recycle requires Eng. Review. | $5,790 |
| 1700-0021 | Alternator Niehoff 360 amp (360 amp SAE/320 NFPA rating). Available only on ISL. | $3,311 |
| 1700-0023 | Alternator 320 amp for Freightliner - in place of 275 amp. | $333 |
| 1750-0000 | Ammeter gauge in cab 0-300 amps. | $324 |
| 1750-0001 | Dome lights clear large one for each cab door. | $145 |
| 1750-0002 | Dome lights red large one driver side one officer side | $145 |
| 1750-0004 | Dome lights red large one driver side one officer side rear of cab | $145 |

| Item No. | Description | |
|---|---|---|
| 1750-0006 | Map light flexible arm. Located [#LOC]. | $203 |
| 1750-0008 | Radio AM/FM cassette with weather band located [#LOC] | $533 |
| 1750-0009 | Radio AM/FM CD with weather band located [#LOC]. | $815 |
| 1750-0010 | Radio speakers additional pair. Locate each side rear cab ceiling. | $276 |
| 1750-0011 | Speedometer officer's side overhead. | $314 |
| 1750-0012 | Swivel reading lamps (PR) overhead between driver and officer. Lights to be individually switched. | $110 |
| 1750-0013 | Turn signal Whelen 600 LED amber arrow pair located [#LOC]. | $648 |
| 1750-0015 | Windshield fans 8" pair. Location: [#LOC]. | $378 |
| 1750-0016 | Pump hourmeter in cab. | $137 |
| 1750-0019 | Battery charger Super Smart 110 volt 20 amp. | $422 |
| 1750-0021 | Battery charger Kussmaul model 1200 40 amp. | $709 |
| 1750-0022 | Battery charger Kussmaul 40 amp model 1200 with air compressor. | $2,391 |
| 1750-0024 | Auto-Eject receptacle inlet 20 amp located [#LOC] with a [#COL] cover. | $577 |
| 1750-0025 | Super Auto-Eject receptacle inlet 30 amp 120 volt located [#LOC] and with a [#COL] cover. | $843 |
| 1750-0026 | Clamshell controller mounted on officer's side of engine cover for the air horns. | $126 |
| 1750-0027 | Control push-button switch officer dash for Q2B siren. | $96 |
| 1750-0029 | Switch horn button two position DOT/air horn. | $101 |
| 1750-0030 | Switch horn button two position DOT/electronic siren. | $101 |
| 1750-0031 | Switch horn button two position DOT/Q2B. | $101 |
| 1750-0032 | Switch horn button three position DOT/air horn/electronic siren. | $204 |
| 1750-0033 | Switch horn button three position DOT/air horn/Q2B. | $204 |
| 1750-0034 | Switch additional 12 volt/15 amp. Location and function: [#LOC]. | $204 |
| 1750-0035 | Cornering light relay circuits for lights on sides of cab and / or bumper. Includes (2) relays. Requires scene light option. Interlocked with park brake. | $415 |
| 1750-0039 | Mrkr Pkg Chas LEDTrklt-Pmp/Res | $556 |
| 1750-0040 | Battery charger Super Smart 220 volt 50 Hz 20 amp. | $422 |
| 1750-0042 | Horn button selector switch 3-position DOT/ES/Q2B. | $204 |
| 1750-0047 | The chassis shall be pre-wired for installation of tire chains. | $542 |
| 1750-0059 | Receptacle inlet 20 amp with a [#COL] cover. Location: [#LOC]. | $292 |
| 1750-0060 | Auto transfer switch 120 volt. Includes 8 place breaker box. Allows interior receptacles to be powered by either shore power or generator. | $766 |
| 1750-0061 | Control push-button switch officer dash for air horns. | $96 |
| 1750-0062 | Control push-button switch officer dash for siren. | $96 |
| 1750-0063 | Clamshell controller mounted on officer's side of engine cover for Q2B. | $126 |
| 1750-0064 | Clamshell controller mounted on on officer's side of engine cover for electronic siren. | $126 |
| 1750-0065 | Turn signal Whelen 600 halogen amber pair located [#LOC]. | $286 |
| 1750-0066 | Halogen front turn signal amber (PR). Locate: [#LOC]. | $276 |
| 1750-0067 | Additional 4" red LED dome lights (PR) for driver and officer. | $286 |
| 1750-0068 | Additional 4" red incandescent dome lights (PR) for rear of cab. | $268 |
| 1750-0069 | Additional 4" red incandescent dome lights (PR) for driver and officer. | $218 |
| 1750-0070 | Additional 4" red LED dome lights (PR) for rear of cab. | $286 |
| 1750-0071 | Mount customer supplied antenna on cab roof. Location: [#LOC]. | $177 |
| 1750-0072 | 12 VDC (or 24VDC) electrical outlet in the cab wired battery hot. Location: [#LOC]. | $61 |
| 1750-0073 | Antenna base Tessco P/N 90942 (NMO Motorola Style - also called MATM style) on cab roof. Location: [#LOC]. | $95 |
| 1750-0074 | Interlock to position front intake for cab tilting. | $279 |
| 1750-0075 | English dominant main cab gauge cluster. | $2,048 |
| 1750-0076 | Metric dominant main cab gauge cluster. | $2,168 |
| 1750-0077 | Turn signal Code 3 model 65 LED amber with arrow insert (PR). Location: [#LOC]. | $725 |
| 1750-0078 | Light Whelen model PSR00FRR LED (4) red. Horizontal mounted flashing strip light on each of the inside lower cab door panels. Wire through door switch. | $796 |
| 1750-0079 | Fuel gauge for officer. | $252 |
| 1750-0080 | Conduit flexible 1.5" for radio installation center of dash to compartment under officer's seat. | $304 |
| 1750-0081 | Conduit flexible 1.5" for radio installation compartment under officer's seat to pump panel. | $268 |
| 1750-0082 | 12V power distribution module. Includes (6) battery hot and (6) switched hot circuits. 100 amps max (IATS). Location: [#LOC]. | $314 |
| 1750-0083 | Turn signal Federal Signal QuadraFlare QL64Z-ARROW LED amber pair located [#LOC]. | $276 |
| 1750-0084 | Receptacle inlet 220 volt European "Schuko" style. Includes matching cord connector. Location: [#LOC] | $416 |
| 1750-0091 | Battery Saver Kussmaul model 091-195-12 wired to battery charger receptacle. | $701 |
| 1750-0095 | Second DOT traffic horn | $135 |
| 1750-0096 | Bracket for Motorola Spectra Radio in the center overhead console offset to officer side. Dim: 7''W x 2''H must be size of the opening after break. | $83 |
| 1750-0097 | LED Light in cab to Illuminate Pump Shifter and shall activate with the headlights. | $51 |

| Item No. | Description | |
|---|---|---|
| 1750-0098 | Dome Lts Red/White Weldon with Euro style switches. Package includes two lights mounted in the front and two mounted in the rear of the cab. White light wired through master battery switch door ajar and light assembly mounted switch. Red light through light assembly mounted switch. | $564 |
| 1750-0108 | Seat belt detection system programmed to 2" red door ajar light and ES-Key display. Also tied to a "different sounding alarm". | $614 |
| 1750-0110 | Battery Charger Professional Mariner. Located outside driver side door area. The charger to be mounted behind driver's seat on front face of communication box next to EQ2B amplifier. | $1,124 |
| 1750-0111 | Digital voltmeter in cab. Location: Driver side overhead console. | $344 |
| 1750-0113 | Dome Lts Red/White Incandescent. Package includes two lights mounted in the front of the cab. White light wire through door and light assembly mounted switch. Red light through light assembly mounted switch. | $283 |
| 1750-0114 | Cab Headlights in addition to front quad headlights | $433 |
| 1750-0115 | Master warning light switch to have a red cover (or bezel). | $39 |
| 1750-0117 | Auto eject receptacle inlet 15 amp 240 volt with a [#COL] cover. Location: [#LOC]. | $527 |
| 1750-0118 | Flexible 2" conduit with connectors. Location: Officer cab dash to bottom of medical cabinet. | $371 |
| 1750-0119 | Flexible 2" conduit with connectors. Location: Center cab dash to rear bench seat riser. | $322 |
| 1750-0121 | Ammeter gauge in cab 0-400amp Cruz Pro digital. | $485 |
| 1750-0122 | Additional dome lts red/white 4" LED (PR) located one each side over enclosed TM pump panel. White light wired through door and light assembly mounted rocker switch. Red light through light assembly mounted rocker switch. | $763 |
| 1750-0123 | Auto eject receptacle inlet 15amp location or function [#LOC] and the color shall be [#COL]. | $524 |
| 1750-0124 | Whelen 4'' round LED red door ajar light. Model 20R00FCR light with 2FLANGEC bezel. | $189 |
| 1750-0125 | Block heater receptacle 15 amp with a [#COL] cover. Location [#LOC]. | $292 |
| 1750-0126 | Conduit flexible 1.5" for radio installation center of dash to area behind officer's seat. | $304 |
| 1750-0129 | Door ajar alarm to be a chime versus an alarm. | $219 |
| 1750-0130 | Xantrex Truecharge 40+. Wire to autoeject receptacles. | $1,716 |
| 1750-0131 | Pyrometer gauge in cab. | $576 |
| 1750-0132 | Auto transfer switch for additional battery charge receptacle. | $464 |
| 1750-0133 | Conduit flexible 1.5" for radio installation center of dash to rear bench seat. | $304 |
| 1750-0134 | Conduit flexible 1.5" for radio installation rear bench seat to pump panel. | $466 |
| 1750-0137 | Kwik Eject auto eject receptacle inlet 20amp located [#LOC] with a yellow cover. (Obsolete from vendor) | $625 |
| 1750-0138 | Work lights to be programmed "on" when park brake is set and switched in overhead console. | $126 |
| 1750-0140 | Mount customer supplied antenna(s) on cab roof. Location(s): (1) each side of A/C condensor and (1) GPS antenna located top of vista officer side front corner. Includes coaxial cable terminating in the rear bench seat riser. | $177 |
| 1750-0142 | Kussmual Auto-Eject 20 on each side of charger with a Red cover. Auto-eject on each side of cab to alow plug in on either side for battery charger with transfer switch in cab. | $1,511 |
| 1750-0144 | Q2B brake switch to have a red cover (or bezel). | $39 |
| 1750-0145 | Relocate the battery charger and (if applicable) air compressor to below the rear wall bench seat or rear center wall medical cabinet (if equipped). | $559 |
| 1750-0148 | Turn signal Whelen 700 LED Chevron amber (PR). Locate [#LOC]. | $679 |
| 1750-0149 | Control push-button switch on officer's dash for Q2B siren brake. | $96 |
| 1750-0150 | Block heater receptacle 20 amp Auto-Eject with a [#COL] cover. Location [#LOC]. | $577 |
| 1750-0151 | Receptacle inlet 15amp with a [#COL] cover. Location: [#LOC] | $292 |
| 1750-0153 | Federal Signal model 462121 Renegade red strobe light for compartment warning light under over head console. | $268 |
| 1750-0156 | Special EQ2B power amplifier location. Amp to be located [#LOC]. | $280 |
| 1750-0157 | Special battery charger location. Charger to be located [#LOC]. | $280 |
| 1750-0158 | Dome Lts Red/White LED. Package includes two lights mounted in the front and two mounted in the rear of the cab. White light wired through door and light assembly switch. Red light through light assembly switch. | $815 |
| 1750-0159 | 3 Position Q2B momentary switch (activate/off/brake). Loc: [#LOC]. | $204 |
| 1750-0160 | Dome Lts Red/White Incandescent. Package includes two lights mounted in the front and two mounted in the rear of the cab. Front cab lights: White light wired through door and light assembly mounted switch. Red light through light assembly mounted switch. Rear cab lights: White light wired through door and switch on side cab interior wall. Red light through switch on side cab interior wall. Rear dome switches to be located between side window and door opening and control light on respective side of cab. | $966 |
| 1750-0161 | Air compressor Kussmaul model 091-9B-1 120V. | $987 |
| 1750-0162 | Battery charger Kussmaul model 091-35/10 35 amp battery charger / 10 amp battery saver. | $828 |
| 1750-0165 | Conduit flexible 1.5" for radio installation center of dash to compartment under driver's seat. | $304 |
| 1750-0166 | ATC override switch. | $204 |

| Item No. | Description | |
|---|---|---|
| 1750-0167 | Block heater to be wired to battery charger receptacle with a lighted on/off switch behind driver seat. | $203 |
| 1750-0168 | Dome Lts Red/White 4" incandescent (5). Lights to be located two front and three rear. White light wired through door and light assembly mounted rocker switch. Red light through light assembly mounted rocker switch. | $735 |
| 1750-0169 | Radio speakers (3). Locate officer ceiling and each side rear cab ceiling. Wiring to terminate in officer side overhead console for customer supplied radio(s). | $473 |
| 1750-0171 | Clamshell controller mounted on on driver's side of engine cover for Q2B. | $126 |
| 1750-0172 | Special battery charger and air compressor location. Charger and air compressor to be located [#LOC]. | $280 |
| 1750-0173 | Rocker switch cover (or bezel) to be red. Location: [#LOC]. | $39 |
| 1750-0176 | Light Whelen model 70RA6FCR Super LED (4) split red/amber with chrome flanges. Horizontally mounted flashing lights on each of the interior cab door panels outboard mounted. Wire through door switch. | $1,624 |
| 1750-0177 | Receptacle inlet 30amp twist lock with a [#COL] cover. Location: [#LOC]. | $559 |
| 1750-0178 | Windshield fan 8". Location: rear facing mounted on driver side 3x3 post. | $191 |
| 1750-0185 | Vernier engine throttle in cab for use with jet dump operations. Locate in driver side overhead console or Lower Dash. Includes selector sw also in overhead console or Lower Dash. | $916 |
| 1750-0186 | Dome Lts Red/White Incandescent additional. White light wire through door and light assembly mounted switch. Red light through light assembly mounted switch. Location: Centered rear of cab. | $145 |
| 1750-0187 | Auto drain Kussmaul model 091-9-089 120V. For use with air compressor 091-9B-1 only. | $209 |
| 1750-0188 | DPF regeneration override switch. | $204 |
| 1750-0190 | Dome Lts Red/White LED. Package includes two lights mounted in the front of the cab. White light wire through door and light assembly mounted switch. Red light through light assembly mounted switch. | $409 |
| 1750-0191 | Cab quad headlights below front bumper in addition to standard headlights. | $515 |
| 1750-0194 | Dome Lts Red/White LED additional (PR). White light wire through door and light assembly switch. Red light through light assembly switch. Location: Rear crew area. | $409 |
| 1750-0195 | Cab dome lts red/white (2 red/white 2 white) 4" incandescent. White light wired thru door and light assembly mounted rocker switch. Red light thru light assembly mounted rocker switch. Red/white located in front of cab white located at rear cab doors. | $588 |
| 1750-0196 | Battery charger Newmar model PT-80 80amp. | $3,544 |
| 1750-0197 | Clamshell controller mounted on driver's side of engine cover for the air horns. | $126 |
| 1750-0200 | Whelen model 1510R red strobe hazard warning light. Locate in cab under over head console. | $273 |
| 1750-0203 | Special location for battery charger indicator. Location: [#LOC]. | $112 |
| 1750-0205 | Handheld flashlight orange Streamlight Vulcan flashlight with vehicle mount system. Location: [#LOC]. | $259 |
| 1750-0206 | Clamshell controller mounted on officer's side cab dash for Q2B and air horns. | $126 |
| 1750-0207 | Lovered cover for battery charger or air compressor (EA). Finish to match cab interior. | $195 |
| 1750-0208 | Light Whelen model PSA00FAR LED (4) amber. Horizontal mounted flashing strip light on each of the interior lower cab door panels outboard. Wire through door switch. | $796 |
| 1750-0209 | Clamshell controller mounted on on officer's side of engine cover (knee height) for Q2B. | $126 |
| 1750-0212 | Battery charger and air compressor package 240 VAC/ 50 HZ. | $1,445 |
| 1750-0214 | Mount customer supplied GPS antenna on cab roof. Location: [#LOC]. | $177 |
| 1750-0215 | Turn signal Whelen M6 LED arrow amber pair located [#LOC]. | $655 |
| 1750-0216 | Mount customer supplied MAR antennas (5) on cab roof. Location: (1) approx 12" ahead of vista 18" left of cab center (1) approx 12" ahead of vista 18" right of cab center (forward antennas will be 36" apart) (1) approx 18" rearward from front edge of vista centered left to right (1) approx 18" rearward from front edge of vista 18" left of center and (1) approx 18" rearward from front edge of vista 18" right of center. Route all cables to below rear wall bench seat. | $705 |
| 1750-0221 | Xenon HID cab headlights. CIIX and TyphoonX only. | $1,795 |
| 1750-0222 | 12 volt electrical outlet in the cab wired through ignition. Location: [#LOC]. | $61 |
| 1750-0223 | Control push button switch center electrical cover offset to officer side for air horns | $96 |
| 1750-0231 | Light Whelen model PSA00FAR LED (3) amber. Horizontally mounted flashing strip light on each of the interior lower cab door panels outboard. Wire through door switch. | $596 |
| 1750-0232 | Incandescent Red/White domes and upper NFPA step lighting. Package includes two lights mounted in the front and two mounted in the rear of the cab. White light wire through door and light assembly mounted switch. Red light through light assembly mounted switch. Upper cab step areas to have for NFPA incandescent step lighting. Step lighting to be positioned per OEM recommendations for best compliance to NFPA. | $648 |
| 1750-0234 | Digital speedometer officer's side overhead. | $581 |
| 1750-0250 | Dome Lt Red/White LED additional (EA). White light wire through door and light assembly switch. Red light through light assembly switch. Location: Rear facing engine cover seat(s). | $205 |
| 1750-0252 | Kussmaul mounting plate model 091-9H for 12v air compressor. | $83 |
| 1750-0256 | Auto eject block heater receptacle inlet 15amp with a [#COL] cover. Location: [#LOC]. | $524 |

| Item No. | Description | |
|---|---|---|
| 1750-0260 | Battery charger Super Smart 20 amp with 120V Kussmaul HP air compressor. | $1,676 |
| 1750-0261 | Clamshell controller mounted on on officer's side cab dash at "A" post for Whelen Howler. | $126 |
| 1750-0262 | Auto transfer switch 120 volt. Includes 8 place breaker box. Allows interior receptacles to be powered by either shore power or generator. Ship to VanMor for installation. | $766 |
| 1750-0263 | Radio speakers pair. Locate each side rear cab ceiling. Wiring to terminate in center dash for customer supplied radio(s). | $276 |
| 1750-0264 | Block/oil pan heater on/off 110V switch. Location: inside driver door; rear of seat. | $174 |
| 1750-0267 | Battery charger Kussmaul 4000 45 amp with air compressor. | $2,451 |
| 1750-0268 | Battery charger Kussmaul 40 amp model 1200 with 120V HP air compressor. | $2,441 |
| 1750-0269 | 12ga dedicated ground wire to center overhead console. | $80 |
| 1750-0270 | Control push-button switch officer side (side facing) of center electrical cover for Q2B siren. | $96 |
| 1750-0271 | Control push-button switch officer side (side facing) of center electrical cover for air horns. | $96 |
| 1750-0275 | Receptacle inlet 30amp household with a [#COL] cover. Location: [#LOC]. | $559 |
| 1750-0276 | Battery charger Newmar model EV-40-12-1 40amp. | $1,470 |
| 1750-0278 | Light Whelen LED strip model PSC0CDCR to illuminate cab floor. Horizontally mounted on seat riser. Wire through door switch. Location: [#LOC] | $155 |
| 1750-0279 | Clamshell controller mounted on on officer's side of engine cover for Q2B. Switch to be on top horz surface next to dash. | $126 |
| 1750-0283 | LED cab headlights. TyphoonX CIIX and QST2 only. | $1,590 |
| 1750-0284 | Switch additional guarded toggle. Location and Function: [#LOC]. | $204 |
| 1750-0285 | The chassis shall be pre-wired for installation of tire chains. Includes guarded toggle switch located on the driver side diagnostic panel. | $428 |
| 1750-0286 | Receptacle block heater inlet 20amp with a [#COL] cover. Location: [#LOC]. | $292 |
| 1750-0289 | Battery charger Kussmaul 4000 45 amp | $1,575 |
| 1750-0300 | Radio AM/FM/CD/weather band w/auxiliary input port located [#LOC]. | $712 |
| 1750-0302 | Control push-button switch officer side ovherhead for Rumbler. | $96 |
| 1750-0304 | Radio Pioneer DEH-X 7500HD AM/FM CD/USB located [#LOC]. | $981 |
| 1750-0306 | Radio speakers additional pair Pioneer TS-G1341R. Locate each side rear cab ceiling. | $350 |
| 1750-0309 | Air horn switch on passenger side wall of mic box on rear cab wall. Switch to be labeled ''Evacuation Alert''. | $143 |
| 1750-0310 | Clamshell controller mounted on officer's side of engine cover for Federal Signal Rumbler. | $126 |
| 1750-0314 | Battery charger Kussmaul model 12 HO PIM 20 amp. Includes model 091-189-12 indicator located adjacent to inlet receptacle. | $1,414 |
| 1750-0315 | Rear upper window wipers (PR). Top mount enclosed cab only. Requires 4" cap. | $1,404 |
| 1750-0316 | Switch horn button two position DOT/Rumbler. | $101 |
| 1750-0317 | Auto-Eject receptacle inlet 20 amp located driver side rear of body above tail lights in diamond plate box with a yellow cover. | $699 |
| 1750-0319 | Control push-button switch officer side (side facing) of center electrical cover for EQ2B siren. | $96 |
| 1750-0320 | Conduit flexible .75" for radio installation distribution box to officer's overhead. | $304 |
| 1750-0321 | ATC/KD driving lights (PR) with rubber housings. Includes switch in cab accessible to driver. Location: [#LOC]. | $863 |
| 1750-0322 | Light Whelen model PSC00FCR LED (4) clear. Vertically mounted flashing strip light with 14 flash patterns including steady burn shall be mounted on the lower cab step well areas (interior). The front doors shall have (1) strip light shall be located on forward step well wall (both sides). The rear doors shall have (1) strip light shall be located on rear step well wall (both sides). Wire through door switch. | $796 |
| 1750-0323 | Engine tunnel to be fitted with a position activation switch to activate engine compartment lighting when not in the fully closed position. | $503 |
| 1750-0324 | Air compressor Kussmaul model 091-9 12V. | $949 |
| 1750-0325 | Pigtail minimum of 18" of wire for service of the battery charger and/or air compressor. | $49 |
| 1750-0326 | Auto transfer switch 120 volt. Includes 2 place breaker box. Allows interior receptacles to be powered by either shore power or generator. | $745 |
| 1750-0327 | Switch momentary to activate heat option contained in mirrors for 10 minutes. The heat will automatically turn itself off after the heat activation time period (10 minutes) has expired. | $196 |
| 1750-0328 | Auto transfer switch 120 volt. Includes 8 place breaker box. Allows interior receptacles to be powered by either shore power or inverter. | $766 |
| 1750-0329 | Cornering light relay circuits for lights in center of rear tandem wheel well. Includes (2) relays. Requires scene light option. Interlocked with park brake. | $415 |
| 1750-0330 | Dome Lt Red/White LED additional (EA). White light wire through door and light assembly switch. Red light through light assembly switch. Location: centered between rear cab dome lights. | $205 |
| 1750-0331 | Control push-button switch driver side (side facing) of center electrical cover for EQ2B siren. | $96 |
| 1750-0332 | Dome lights Red/White incandescent. Package includes two lights mounted in the front and two mounted in the rear of the cab Trucklite 80 series with push style on/off button (may be used with Ford chassis). White light wire through door and light assembly mounted switch. Red light through light assembly mounted switch. | $564 |

| Item No. | Description | |
|---|---|---|
| 1750-0333 | Dome lights White incandescent. Package includes two lights mounted in the front and two mounted in the rear of the cab Trucklite 80 series with push style on/off button (may be used with Ford chassis). Lights wire through door and light assembly mounted switch. | $564 |
| 1750-0334 | Dome lights White incandescent. Package includes two lights mounted in the front of the cab Trucklite 80 series with push style on/off button (may be used with Ford chassis). Lights wire through door and light assembly mounted switch. | $282 |
| 1750-0335 | Metric speedometer in English dominant main cab gauge cluster. | $2,168 |
| 1750-0336 | Whelen traffic advisor control head (model TRACTRL1A) shall be mounted in the center overhead panel. The control head shall be wired to the main power switching circuit. There shall be a 50' control cable (model TAPVC50) ran from the control head to the rear of the body coiled up for dealer supplied and installed traffic advisor. | $1,014 |
| 1750-0337 | Garmin GSP 18X USB. May be mounted at E-ONE discretion on the cab roof within reach of cab 12VDC hot outlet(s). | $248 |
| 1750-0338 | Radio Pioneer DEH-3300UB AM/FM CD/USB (with a pair of TS-D1302R speakers) located [#LOC]. | $981 |
| 1750-0339 | Radio speakers additional pair Pioneer TS-D1302R. Locate each side rear cab ceiling. | $350 |
| 1750-0340 | Control push-button switch officer side (side facing) of center electrical cover for EQ2B siren brake. | $96 |
| 1750-0341 | Transverse cab compartment dome light package (4) LED. Trucklite 44 series. | $582 |
| 1750-0342 | Battery charger Kussmaul model 12 HO PIM 20 amp. Includes model 091-189-12 indicator located behind driver's door adjacent to exterior handrail. | $1,414 |
| 1750-0343 | Battery charger E-ONE LPC 20. 120 volt inlet 20 amp output. | $608 |
| 1750-0344 | Battery charger E-ONE LPC 40. 120 volt inlet 40 amp output. | $924 |
| 1750-0350 | Install customer supplied radio/intercom (ea). Loc: [#LOC]. | $505 |
| 1750-0351 | Kussmaul solar power charging system; model 092-1220-1. Location: Center rear cab roof. | $2,385 |
| 1750-0353 | Dome Lts Red/White LED. Package includes two lights mounted in the front and three mounted in the rear of the cab. White light wired through door and light assembly switch. Red light through light assembly switch. | $1,039 |
| 1750-0355 | Each 110 volt cab receptacle shall have a dedicated breaker within the breaker box. This is to provide each cab mounted receptacle (single outlet duplex etc. as applicable) with its own isolated circuit. | $269 |
| 1750-0356 | Radio speaker (1). Locate center rear ceiling. Wiring to terminate in center overhead console for customer supplied radio. | $140 |
| 1750-0358 | Antenna base Tessco P/N 90942 (NMO Motorola Style - also called MATM style) on cab roof package (5). Locations: (1) each side rearward of light bar (1) each side forward of the vista. These (4) shall be positioned side to side as required to prevent interference with light tower and its operation. There shall be (1) additional mounted on the officer side rear corner of the cab roof. All (5) shall have coax cable terminating below the officer seat. | $471 |
| 1750-0360 | Auto-Eject receptacle inlet 30 amp 240 volt located [#LOC] and with a [#COL] cover. | $843 |
| 1750-0361 | Cab quad headlights in front bumper in addition to standard headlights. | $515 |
| 1750-0364 | Cab quad headlights below front bumper in addition to standard headlights. The headlights shall be mounted in a tread plate box that will extend the full depth and width of the hose trays mounted within the bumper ext. on each side. | $580 |
| 1750-0368 | Dome Lts Red/White 4" LED (6). Lights to be located two front and four rear. White light wired through door and light assembly mounted rocker switch. Red light through light assembly mounted rocker switch. | $2,280 |
| 1750-0369 | Guard. On-Spot activation switch shall have a red flip up safety guard. The switch shall de located on the driver side overhead panel offset to the officer side as far as possible. | $52 |
| 1750-0370 | Engine hourmeter in cab. | $159 |
| 1750-0372 | 12 VDC (or 24VDC) electrical outlet in the cab wired battery hot with 14AWG at each seated position. Outlets are shared within the same circuit. | $244 |
| 1750-0374 | Light Whelen model PSB00FBR LED (4) blue. Horizontally mounted flashing strip light on each of the inside lower cab door panels. Wire through door switch. | $796 |
| 1750-0375 | Switch console mounted to the driver side engine cover. | $160 |
| 1750-0377 | Additional 4" white LED dome lights (PR) for rear of cab wired battery hot to a 15 min. timer switch. Locate switch on interior officer side rear side wall just above floor level. | $483 |
| 1750-0378 | Switch momentary to illuminate cab dome lighting for 15 minutes. The lights will automatically turn themselves off after the activation time period (15 minutes) has expired. Locate switch on interior officer side rear side wall just above floor level. | $252 |
| 1750-0381 | Cornering light relay circuits for cab/body lights on side of unit. Includes (2) relays. Interlocked with park brake. | $415 |
| 1750-0383 | Radio Jensen JHD1630B AM/FM/WB (with a pair of Polk Audio DXi525 5.25" speakers) located [#LOC]. | $1,092 |
| 1750-0385 | Cab step lighting package. Includes (2) EON LED lights per side IPOS. (1) Light per door mounted in the cab step well area | $252 |
| 1750-0388 | Handheld Flashlight black Streamlight SL-20X with 12 VDC charger. Location: driver and officer rear cab wall outboard below seat support channel. | $225 |

| Item No. | Description | |
|---|---|---|
| 1750-0389 | Radio speakers pair. Locate (1) above officer and (1) centered in rear crew cab area. Wiring to terminate (1) center dash (1) center overhead for customer supplied radio(s). | $276 |
| 1750-0390 | Radio Poly-Planar AM/FM CD/MP3 with USB port located center overhead console offset to officer side. | $873 |
| 1750-0392 | Battery charger Kussmaul 75 amp model 091-149-12 with 091-9 air compressor. | $3,541 |
| 1750-0393 | Switch secondary braking three position Jacobs/Off/Telma. Jacobs Brake top position off center Telma bottom position. | $209 |
| 1750-0395 | Light EON LED to illuminate cab floor(EA). Horizontally mounted on seat riser. Wire through door switch. Location: [#LOC]. | $155 |
| 1750-0396 | Control push-button switch on officer's overhead for Q2B siren brake. | $96 |
| 1750-0398 | Mount customer supplied GPS antenna on interior of cab. Location will be per antenna manufacturers' recommendation. | $177 |
| 1750-0399 | Control push-button switch driver side of center dash upper tier for Q2B siren. | $96 |
| 1750-0401 | Cornering light relay circuits for only the side facing gravel shield lights. Includes (2) relays. Requires scene light option. Interlocked with park brake. | $415 |
| 1750-0404 | Dome lights Whelen red/white 6" Super-LED surface mounted interior lights. Four (4) model 60CREGCS lights to be located two front and two rear. White light wired through door and light assembly. Red light through switch mounted on light assembly. | $1,347 |
| 1750-0405 | Battery charger Kussmual model 091-200-12-194-WT-RD. 120 Volt 40 Amp output includes water tight display mounted adjacent to inlet. | $1,772 |
| 1750-0406 | The air horn(s) shall not be included within the Multiplex system (separate switching from Multiplex display required). | $390 |
| 1750-0407 | Control push-button switch for Rumbler. Location [#LOC]. | $96 |
| 1750-0408 | Mount customer supplied (1) radio cable and (4) antennas. Antenna locations: (1) driver and officer side forward cab roof (1) driver and officer side rearward cab roof. Route all cables to upper rear wall medical cabinet. Route radio cable from center of dash to upper rear wall of medical cabinet. | $705 |
| 1750-0410 | Switch additional through multiplex display. Function: [#LOC]. | $91 |
| 1750-0411 | Dome Lts Red/White Whelen model 60CREGCS LED. Package includes two lights mounted in the front and four mounted in the rear of the cab. White light wired through door and light assembly switch. Red light through light assembly switch. | $1,678 |
| 1750-0412 | Kussmaul digital battery display model 091-194-IND-WT-RD in place of standard. | $347 |
| 1750-0414 | Warning light Whelen M6R series Linear Super LED (PR) red. Location: interior of canopy doors wired through each door ajar switch only. | $718 |
| 1750-0415 | Dome Lt Red/White LED additional (EA). White light wire through door and light assembly switch. Red light through light assembly switch. Location: Below forward vista medical cabinet. | $205 |
| 1750-0417 | Flexible 1" conduit with connectors. Location: radio cabinet to center of dash. | $304 |
| 1750-0419 | Turn signal TecNiq LED amber strip (PR) located in center of quad headlight bezel (QST2 only). | $109 |
| 1750-0420 | Daytime Running Light TecNiq LED strip (PR) located in center of quad headlight bezel (QST2 only). | $118 |
| 1750-0423 | Programming instructions for auxiliary switch 1 on steering wheel switch pod. Switch function: [#LOC]. | $91 |
| 1750-0424 | Programming instructions for auxiliary switch 2 on steering wheel switch pod. Switch function: [#LOC]. | $91 |
| 1750-0425 | Programming instructions for auxiliary switch 3 on steering wheel switch pod. Switch function: [#LOC]. | $91 |
| 1750-0426 | Turn signal Weldon LED amber pair located [#LOC]. | $547 |
| 1750-0428 | Interior courtesy red LED light package. Includes driver / officer side engine cover lighting center dash wash lights and front / rear floor lights. | $365 |
| 1750-0429 | Dual USB charging ports in the cab wired battery hot. Location: [#LOC]. | $70 |
| 1750-0431 | Conduit flexible 1" for radio installation center of dash to area behind officer's seat. | $304 |
| 1750-0433 | Battery charger Kussmaul LPC 80. 120 volt inlet 80 amp output. | $1,696 |
| 1750-0434 | Radio cabinet ventilation fan (PR). Location: ceiling of radio cabinet wired through ignition. | $220 |
| 1750-0436 | Dome Lt Red/White LED additional (EA). White light wire through door and light assembly switch. Red light through light assembly switch. Location: center between front cab seats. | $205 |
| 1750-0437 | The chassis shall be pre-wired for installation of tire chains. Includes guarded toggle switch located on the center dash panel. | $428 |
| 1750-0438 | Radio AM/FM CD with weather band located [#LOC]. Includes speakers in ceiling to rear of driver/officer. | $815 |
| 1750-0439 | Dome Lt Red/White Whelen model 60CREGCS LED additional (EA). White light wired through door and light assembly switch. Red light through light assembly switch. Location: center rear crew cab ceiling. | $338 |
| 1750-0440 | Switch horn button three position DOT/air horn/electronic siren. Wired through multiplex display screen. | $204 |
| 1750-0441 | Battery charger Kussmaul model EV40 40 amp. | $1,540 |

| Item No. | Description | |
|---|---|---|
| 1750-0442 | Light EON LED (EA). Horizontally mounted in seat riser. Wire through door switch. Location: officer seat riser. | $155 |
| 1750-0443 | Dome Lts Red/White Whelen model 60CREGCS LED. Package includes two lights mounted in the front of the cab. White light wired through door and light assembly switch. Red light through light assembly switch. | $560 |
| 1750-0445 | Clamshell controller mounted on center console offset to officer side for air horns. | $126 |
| 1750-0447 | Dome Lts Red/White Whelen model 60CREGCS LED. Package includes two lights mounted in the front and two mounted in the rear of the cab. White light wired through door and light assembly switch. Red light through light assembly switch. | $1,119 |
| 1750-0448 | Light Whelen model PSRASXCR LED (4) red/amber. Horizontally mounted flashing strip light on each of the inside lower cab door panels. Wire through door switch. | $828 |
| 1750-0449 | Momentary DPF regeneration override switch. | $204 |
| 1750-0451 | Steering wheel with switch pods IPOS. Includes wiper functions master warning sw air horn sw aux brake on/off and (3) aux switches. For use only with Typhoon and CII NOT equipped with 4Front. (Requires seperate programming options to activate aux switches) | $915 |
| 1750-0452 | Radio speakers (3). Locate officer ceiling and each side rear cab ceiling. Wiring to terminate in center overhead console for customer supplied radio(s). | $473 |
| 1750-0453 | Auto transfer switch 120 volt. Includes 12 place breaker box. Allows interior receptacles to be powered by either shore power or generator. | $806 |
| 1750-0454 | Courtesy light for driver and officer located on front of risers wired through marker lights. Whelen model 0SR00SCR light. | $256 |
| 1750-0455 | Block heater connector; 15 amp male. Location: driver side under front bumper adjacent to frame rail. | $102 |
| 1750-0457 | Turn signal Whelen 600 LED amber arrow pair with black bezel located [#LOC]. | $700 |
| 1750-0458 | Quad bezels (4) black ipos. | $257 |
| 1750-0460 | Light Whelen model PSR00FRR LED (4) red. Horizontally mounted flashing strip light on each of the inside cab door panels below the windows. Wire through door switch. | $796 |
| 1750-0462 | Turn signal Whelen M6 LED arrow amber pair with clear lenses located [#LOC]. | $655 |
| 1750-0464 | Dome Lt Red/White Whelen model 60CREGCS LED. One (1) light centered between driver/officer in the ceiling. White light wired through door and light assembly switch. Red light through light assembly switch. | $338 |
| 1750-0466 | DEF level gauge adjacent to tank fill area. | $351 |
| 1750-0468 | Relocate driver master power window controls and officer front window control to center upper tier. | $416 |
| 1750-0470 | Relocate driver master power window controls to cab dash upper tier offset to driver. | $416 |
| 1750-0471 | Auto-Eject receptacle inlet 20 amp located rear of body driver side with a Yellow cover. Receptacle wired to roof top A.C. | $577 |
| 1750-0474 | Control push button switch center dash upper tier offset to officer side for air horns | $96 |
| 1750-0475 | Control push-button switch center dash upper tier offset to officer for Q2B. | $96 |
| 1750-0476 | Speaker wire for dealer/customer supplied radio/speaker. Route wire from driver side 3x3 up high to center dash. | $149 |
| 1750-0477 | Clamshell controller mounted on officer's side of engine cover for Q2B brake. | $126 |
| 1750-0478 | Battery charger Kussmaul model 091-216-40/20 40 amp battery charger / 20 amp battery saver. | $2,004 |
| 1750-0479 | On-Spot activation switch to have a red cover (or bezel). | $39 |
| 1750-0480 | Auto-Eject dual receptacle inlet; 30 amp 120V with air auto eject located [#LOC] with a [#COL] cover. | $1,519 |
| 1750-0481 | Auto-Eject receptacle inlet 20 amp wired to roof top AC located [#LOC] with a [#COL] cover. | $577 |
| 1750-0482 | Control push-button switch officer switch panel for Q2B siren. | $96 |
| 1750-0483 | Control push-button switch on officer's switch panel for Q2B siren brake. | $96 |
| 1750-0484 | Control push-button switch officer switch panel for siren. | $96 |
| 1750-0485 | Control push-button switch officer switch panel for air horns. | $96 |
| 1750-0486 | Battery charger Kussmaul model Pump Plus 1200 40 amp. | $1,442 |
| 1750-0488 | Ammeter gauge in cab 0-300 amps through multiplex display. | $762 |
| 1750-0489 | Air compressor to be located floor mounted in officer side wheel well medical cabinet. Includes grating over front for protection. | $124 |
| 1750-0490 | Lateral "G" Alert system with Audible and Visual warnings. | $4,296 |
| 1750-0491 | The chassis shall be pre-wired for installation of tire chains. Includes 12 volt rocker lock-out/safety style switch. | $542 |
| 1750-0492 | Interlock to position front bumper lid for cab tilting. | $279 |
| 1750-0493 | Rear upper window wipers (3). Requires 4" cap. Switch located on upper rear overhead panel. | $2,104 |
| 1750-0495 | Kussmaul bluetooth module model 091-226 wired to cab speakers. Located in cab accessible to driver. | $348 |
| 1750-0497 | Additional marker light TecNiq amber LED strip (PR) located in center of quad headlight bezel (QST2 only). | $118 |
| 1750-0498 | Aerial PTO switch to have a red cover (or bezel). | $39 |

| Item No. | Description | |
|---|---|---|
| 1750-0499 | Ammeter gauge in cab 0-400 amps through multiplex display. | $762 |
| 1750-0500 | Relocate driver master power window controls center upper tier offset to driver and officer front window control to center upper tier offset to officer. | $416 |
| 1750-0501 | Clamshell controller mounted on on driver's side of engine cover for electronic siren. | $126 |
| 1750-0503 | Whelen model 01-066A584152 red courtesy light with 45 degree bezel. Locate on the driver ceiling to illuminate overhead switches. Includes switch adjacent to light. | $332 |
| 1750-0504 | Radio Delphi AM/FM/Weatherband with CD and aux input and USB port. Located [#LOC]. | $815 |
| 1750-0505 | Dual DPF regeneration override switches. (1) controls manual generation; (1) controls inhibit. | $406 |
| 1750-0506 | Radio AM/FM CD Kenwood model KDC-BT762HD located [#LOC]. | $922 |
| 1750-0507 | The chassis shall be pre-wired for installation of tire chains. Includes guarded toggle switch located on the driver overhead console. | $428 |
| 1750-0509 | Battery charger Iota model DLS-75 75 amp. | $761 |
| 1750-0513 | The commercial chassis shall be pre-wired for installation of tire chains. Installed by chassis OEM. | $542 |
| 1750-0514 | Peterson LED cab headlights. | $981 |
| 1750-0516 | Auto drain Kussmaul model 091-9-086 12V. For use with air compressor 091-9-12V only. | $209 |
| 1750-0517 | Cab headlights Sirius single low/hi beam located recessed behind bumper in addition to front cab mounted quad headlights. | $641 |
| 1750-0519 | Sirius cab headlights. TyphoonX CIIX and QST2 only. | $156 |
| 1750-0521 | Deutsch connector in center cab dash. Wired as follows: blue wire: hot master warning red wire: hot park brake applied purple wire: hot left turn signal and green wire: hot right turn signal. | $514 |
| 1750-0522 | Flexible 2" conduit with connectors. Location: Center cab dash to radio cabinet. | $371 |
| 1750-0526 | Dome Lts Red/White Incandescent. Package includes two lights mounted in the front of the cab. White light wire through door and light assembly mounted switch. Red light through light assembly mounted switch. | $326 |
| 1750-0527 | Light Whelen model PSR00FRR LED (2) red. Horizontal mounted flashing strip light on each of the inside lower cab door panels. Wire through door switch. | $796 |
| 1750-0529 | Air compressor Kussmaul model 091-9-12V-HP. | $1,054 |
| 1750-0530 | Radio speakers (4). Locate (1) each side front and rear cab ceiling. Wiring to terminate in center lower dash for customer supplied radio(s). | $630 |
| 1750-0531 | Control push-button switch center lower dash for Q2B siren. | $96 |
| 1750-0532 | Control push-button switch on center lower dash for Q2B siren brake. | $96 |
| 1750-0533 | Flexible 3/4" conduit with connectors. Location: officer side overhead to behind officer seat. | $443 |
| 1750-0535 | Clamshell controller mounted on officer's side switch panel for Q2B brake. | $126 |
| 1750-0536 | Clamshell controller mounted on officer's side switch panel for Q2B. | $126 |
| 1750-0539 | PharmGuard dual mode power supply; 110V shoreline and 12V power. | $520 |
| 1750-0540 | Dual USB charging ports in the cab wired through ignition. Location: [#LOC]. | $70 |
| 1750-0541 | Kussmaul bluetooth module model 091-226 wired to cab speakers. Located in officer overhead. | $348 |
| 1750-0542 | PharmGuard dual mode power supply; 110V shoreline and 12V power. | $520 |
| 1750-0543 | Zoll RescueNet Road Safety driver monitoring system. | $10,169 |
| 1750-0544 | Control push-button switch on center console for Q2B siren. | $96 |
| 1750-0547 | Conduit flexible 1" from center cab dash to upper forward wall of L2. | $443 |
| 1750-0548 | Flexible 3/4" conduit with connectors. Location: officer side overhead to officer sid of forward vista medical cabinet . | $443 |
| 1800-0000 | Cooling system for 2004 compliant engines Typhoon only. | $6,192 |
| 1800-0001 | Cooling for EGR engines. Includes charge air cooler. | $6,418 |
| 1800-0003 | Coolant System Overflow Recovery System CRS-150 | $558 |
| 1800-0005 | Cooling system for use with Cyclone II X Typhoon X and Quest chassis. Includes coolant recovery system. | $6,418 |
| 1800-0006 | Remote coolant filter for engine cooling system (Cummins ISC and ISL engines only). | $550 |
| 1800-0013 | Cooling system for use with Cyclone II X Typhoon X and Quest chassis. For use with 2010 / 2013 / 2016 EPA engines. Includes coolant recovery system. | $7,232 |
| 1800-0014 | Cooling system for use with Cyclone II X Hush Mid Engine chassis. Includes coolant recovery system. | $13,885 |
| 1800-0020 | Cooling system for 98 EPA non-EGR engines. Includes charge air cooler. | $6,418 |
| 1800-0022 | Cooling system for use with Navistar MAXXFORCE MF10 2010 EPA engine in Cyclone II X Typhoon X and Quest chassis. Includes coolant recovery system. | $8,223 |
| 1800-0024 | Ball valve drain for radiator ipo petcock valve. | $112 |
| 1800-0025 | Cooling system for use with Navistar MAXXFORCE MF13 2010 EPA engine in Cyclone II X and Quest chassis. Includes coolant recovery system. | $10,199 |
| 1800-0026 | Plug shall be installed in drain of radiator IPO petcock valve. | $67 |
| 1800-0027 | Cummins Compleat (blue) 50/50 pre-mixed antifreeze ipos. | $283 |
| 1800-0028 | Cooling system for use with Cyclone HS and Quest HS chassis. For use with 2013 / 2016 EPA engines. | $7,232 |
| 1800-0029 | Engine cooler. E-ONE chassis only. Requires control option for pump panel. | $454 |
| 1800-0030 | Shutoff valve (1) each side of optional coolant filter. | $137 |

| Item No. | Description | |
|---|---|---|
| **PUMPER BODY** | | |
| 3100-0000 | Driver side body with full height 24" wide forward and 36" wide rearward compartmentation. Includes (1) 56" wide compartment over the wheel well. | $8,626 |
| 3100-0002 | Driver side body with full height 36" wide forward and 36" wide rearward compartmentation. Includes (1) 56" wide compartment over the wheel well. | $9,885 |
| 3100-0003 | Driver side body with full height 42" wide forward and 42" wide rearward compartmentation. Includes (1) 56" wide compartment over the wheel well. | $10,565 |
| 3100-0004 | Driver side body with full height 48" wide forward and 48" wide rearward compartmentation. Includes (1) 56" wide compartment over the wheel well. | $11,302 |
| 3100-0015 | Driver side body with full height 36" wide forward and 50" wide rearward extended compartmentation. Includes (1) 56" wide compartment over the wheel well. | $10,476 |
| 3100-0016 | Driver side body with full height 42" wide forward and 56" wide rearward extended compartmentation. Includes (1) 56" wide compartment over the wheel well. | $11,168 |
| 3100-0020 | Driver side body with full height 36" wide forward and 50" wide rearward enhanced extended compartmentation. Includes (1) 56" wide compartment over the wheel well. | $10,752 |
| 3100-0021 | Driver side body with full height 42" wide forward and 56" wide rearward enhanced extended compartmentation. Includes (1) 56" wide compartment over the wheel well. | $11,445 |
| 3100-0022 | Driver side body with full height 48" wide forward and 62" wide rearward enhanced extended compartmentation. Includes (1) 56" wide compartment over the wheel well. | $12,182 |
| 3100-0025 | Driver side body with full height 42" wide forward and 42" wide rearward compartmentation. Includes (1) 56" wide compartment over the wheel well. | $11,302 |
| 3100-0026 | Driver side body with full height 48" wide forward and 48" wide rearward compartmentation. Includes (1) 56" wide compartment over the wheel well. | $12,093 |
| 3100-0052 | Officer half side body with 24" wide forward and 36" wide rearward compartmentation. Includes adjustable ladder tracks and 30 degree rear body angle for greater angle of departure. | $4,647 |
| 3100-0053 | Officer half side body with 30" wide forward and 36" wide rearward compartmentation. Includes adjustable ladder tracks and 30 degree rear body angle for greater angle of departure. | $4,647 |
| 3100-0060 | Stainless Steel officer half side body with 36" wide forward and 48" wide rearward compartmentation (interior). Includes adjustable ladder tracks. | $5,434 |
| 3100-0075 | Driver side body with full height 36" wide rearward compartmentation. Includes (1) 56" wide compartment over the wheel well and 30 degree rear body angle for greater angle of departure. | $8,394 |
| 3100-0079 | Driver side body with full height 54" wide forward and 60" wide rearward compartmentation. Includes (1) 56" wide compartment over the wheel well. The compartment behind the wheel well has upper area for RM pump panel mounting. | $17,550 |
| 3100-0085 | Driver half side body with 24" wide forward and 36" wide rearward compartmentation. | $4,313 |
| 3100-0089 | Driver half side body with 42" wide forward and 42" wide rearward compartmentation. | $5,284 |
| 3100-0093 | Driver side body with full height 24" wide forward and 36" wide rearward compartmentation. Includes (1) 56" wide compartment over the wheel well. | $8,626 |
| 3100-0094 | Driver side body with full height 30" wide forward and 36" wide rearward compartmentation. Includes (1) 56" wide compartment over the wheel well. | $9,228 |
| 3100-0095 | Driver side body with full height 36" wide forward and 36" wide rearward compartmentation. Includes (1) 56" wide compartment over the wheel well. | $9,885 |
| 3100-0096 | Driver side body with full height 42" wide forward and 42" wide rearward compartmentation. Includes (1) 56" wide compartment over the wheel well. | $10,565 |
| 3100-0097 | Driver side body with full height 48" wide forward and 48" wide rearward compartmentation. Includes (1) 56" wide compartment over the wheel well. | $11,302 |
| 3100-0098 | Driver side body with upper and lower compartmentation. Includes 24" wide forward and 36" wide rearward lower compartments and (3) opening upper compartments. | $9,057 |
| 3100-0099 | Driver side body with upper and lower compartmentation. Includes 30" wide forward and 36" wide rearward lower compartments and (3) opening upper compartments. | $9,659 |
| 3100-0100 | Driver side body with upper and lower compartmentation. Includes 36" wide forward and 36" wide rearward lower compartments and (3) opening upper compartments. | $10,304 |
| 3100-0101 | Driver side body with upper and lower compartmentation. Includes 42" wide forward and 42" wide rearward lower compartments and (3) opening upper compartments. | $10,996 |
| 3100-0102 | Driver side body with upper and lower compartmentation. Includes 48" wide forward and 48" wide rearward lower compartments and (3) opening upper compartments. | $11,735 |
| 3100-0103 | Driver side body with upper and lower compartmentation. Includes 42" wide forward and 42" wide rearward lower compartments (3) opening upper compartments with portable water tank storage with access door at rear. | $11,324 |
| 3100-0104 | Driver side body with upper and lower compartmentation. Includes 48" wide forward and 48" wide rearward lower compartments (3) opening upper compartments with portable water tank storage with access door at rear. | $12,086 |
| 3100-0105 | Driver side body with full height 24" wide forward and 50" wide rearward extended compartmentation. Includes (1) 56" wide compartment over the wheel well. | $9,228 |

| Item No. | Description | |
|---|---|---|
| 3100-0106 | Driver side body with full height 30" wide forward and 50" wide rearward extended compartmentation. Includes (1) 56" wide compartment over the wheel well. | $9,834 |
| 3100-0107 | Driver side body with full height 36" wide forward and 50" wide rearward extended compartmentation. Includes (1) 56" wide compartment over the wheel well. | $10,476 |
| 3100-0108 | Driver side body with full height 42" wide forward and 56" wide rearward extended compartmentation. Includes (1) 56" wide compartment over the wheel well. | $11,168 |
| 3100-0109 | Driver side body with full height 48" wide forward and 62" wide rearward extended compartmentation. Includes (1) 56" wide compartment over the wheel well. | $11,907 |
| 3100-0110 | Driver side body with full height 24" wide forward and 50" wide rearward enhanced extended compartmentation. Includes (1) 56" wide compartment over the wheel well. | $9,506 |
| 3100-0111 | Driver side body with full height 30" wide forward and 50" wide rearward enhanced extended compartmentation. Includes (1) 56" wide compartment over the wheel well. | $10,108 |
| 3100-0112 | Driver side body with full height 36" wide forward and 50" wide rearward enhanced extended compartmentation. Includes (1) 56" wide compartment over the wheel well. | $10,752 |
| 3100-0113 | Driver side body with full height 42" wide forward and 56" wide rearward enhanced extended compartmentation. Includes (1) 56" wide compartment over the wheel well. | $11,445 |
| 3100-0114 | Driver side body with full height 48" wide forward and 62" wide rearward enhanced extended compartmentation. Includes (1) 56" wide compartment over the wheel well. | $12,182 |
| 3100-0115 | Driver side body with full height 36" wide forward and 36" wide rearward compartmentation. Includes (1) 56" wide compartment over the wheel well. | $10,565 |
| 3100-0116 | Driver side body with full height 42" wide forward and 42" wide rearward compartmentation. Includes (1) 56" wide compartment over the wheel well. | $11,302 |
| 3100-0117 | Driver side body with full height 48" wide forward and 48" wide rearward compartmentation. Includes (1) 56" wide compartment over the wheel well. | $12,093 |
| 3100-0118 | Driver side body with full height 24in. wide forward and 36in. wide rearward compartmentation. Includes (1) 56in. wide compartment over the wheel well and 30 degree rear body angle for greater angle of departure. | $8,959 |
| 3100-0119 | Driver side body with full height 30" wide forward and 36" wide rearward compartmentation. Includes (1) 56" wide compartment over the wheel well and 30 degree rear body angle for greater angle of departure. | $9,562 |
| 3100-0120 | Driver side body with full height 36" wide forward and 36" wide rearward compartmentation. Includes (1) 56" wide compartment over the wheel well and 30 degree rear body angle for greater angle of departure. | $10,206 |
| 3100-0121 | Stainless steel driver side body with full height 36" wide forward and 48" wide rearward compartmentation (interior). Includes (1) 60" wide compartment over the wheel well. | $10,860 |
| 3100-0122 | Stainless steel driver side body with full height 48" wide forward and 48" wide rearward compartmentation (interior). Includes (1) 60" wide compartment over the wheel well. | $12,433 |
| 3100-0123 | Stainless steel driver side body with full height 60" wide forward and 60" wide rearward compartmentation (interior). Includes (1) 60" wide compartment over the wheel well. | $13,305 |
| 3100-0124 | Stainless steel driver side body with full height 48" wide forward and 60" wide rearward compartmentation (interior). Includes (1) 60" wide compartment over the wheel well. | $13,055 |
| 3100-0125 | Driver side body with full height 60" wide forward and 42" wide rearward compartmentation. Includes (1) 56" wide compartment over the wheel well. | $12,941 |
| 3100-0126 | Driver side body with upper and lower compartmentation. Includes 60" wide forward and 42" wide rearward lower compartments and (3) opening upper compartments. | $12,555 |
| 3100-0127 | Driver side body with upper and lower compartmentation. Includes 60" wide forward and 42" wide rearward lower compartments (3) opening upper compartments with portable water tank storage with access door at rear. | $12,900 |
| 3100-0128 | Driver side body with full height 60" wide forward and 42" wide rearward compartmentation. Includes (1) 56" wide compartment over the wheel well. | $12,093 |
| 3100-0129 | Driver side body with full height 36" wide rearward compartmentation. Includes (1) 56" wide compartment over the wheel well. | $8,059 |
| 3100-0130 | Driver side body with full height 36" wide rearward compartmentation. Includes (1) 56" wide compartment over the wheel well and 30 degree rear body angle for greater angle of departure. | $8,394 |
| 3100-0131 | Stainless steel driver side body with full height 36" wide forward and 48" wide rearward compartmentation (interior). Includes (1) 60" wide compartment over the wheel well. | $10,860 |
| 3100-0132 | Stainless steel driver side body with full height 48" wide forward and 48" wide rearward compartmentation (interior). Includes (1) 60" wide compartment over the wheel well. | $12,433 |
| 3100-0133 | Stainless steel driver side body with full height 60" wide forward and 60" wide rearward compartmentation (interior). Includes (1) 60" wide compartment over the wheel well. | $13,305 |
| 3100-0134 | Stainless Steel Driver side body with full height 48" wide forward and 60" wide rearward compartmentation (interior). Includes (1) 60" wide compartment over the wheel well. | $13,055 |
| 3100-0135 | Driver side body with full height 60" wide forward and 56" wide rearward compartmentation. Includes (1) 56" wide compartment over the wheel well. Top Mount eMAX Only. | $12,941 |

| Item No. | Description | |
|---|---|---|
| 3100-0136 | Driver side tunnel to hold: Lower section (3) Backboards. Upper section (1) Divider full length of tunnel bolted at rear of tunnel and held in place by a slot in the front of the tunnel for removability. | $614 |
| 3100-0137 | Driver side compartment top storage box. Box to be smooth plate and painted job color with diamond plate top. Box to have a rear vertically hinged door with push-button latch. Box to have diamond plate lids with push button latches. | $1,833 |
| 3100-0138 | Driver side body with upper and lower compartmentation. Includes 24" wide forward and 36" wide rearward lower compartments and (2) opening upper compartments. | $9,057 |
| 3100-0139 | Compartment L1 to have rescue style interior compartment depth and height. | $1,465 |
| 3100-0142 | Driver side body with full height 42" wide forward and 48" wide rearward compartmentation. Includes (1) 56" wide compartment over the wheel well and upper area for recessed pike pole storage. | $10,565 |
| 3100-0143 | Driver side body with full height 52" wide forward and 52" wide rearward compartmentation. Includes (1) 56" wide compartment over the wheel well. | $12,093 |
| 3100-0144 | Driver side body with full height 36" wide forward and 50" wide rearward compartmentation. Includes (1) 56" wide compartment over the wheel well. | $10,752 |
| 3100-0145 | Driver side body with full height 30" wide forward and 50" wide rearward compartmentation. Includes (1) 56" wide compartment over the wheel well. | $10,108 |
| 3100-0146 | Driver side body with full height 24" wide forward and 50" wide rearward compartmentation. Includes (1) 56" wide compartment over the wheel well. | $9,506 |
| 3100-0148 | Driver side body with full height 42" wide forward and 56" wide rearward compartmentation. Includes (1) 56" wide compartment over the wheel well. | $11,397 |
| 3100-0149 | Driver side body with full height 36" wide forward and 42" wide rearward compartmentation. Includes (1) 56" wide compartment over the wheel well. | $11,302 |
| 3100-0151 | Driver side body with 42" wide x 38" high wide forward lower compartmentation and 42" wide x 26.75" high forward upper compartmentation. 42" wide full height rearward compartmentation. Includes (1) 56" wide compartment over the wheel well. | $12,434 |
| 3100-0152 | Driver side body with full height 36" wide forward and 50" wide rearward enhanced extended compartmentation. Includes (1) 56" wide compartment over the wheel well. | $11,431 |
| 3100-0153 | Driver side body with full height 42" wide forward and 56" wide rearward enhanced extended compartmentation. Includes (1) 56" wide compartment over the wheel well. | $12,170 |
| 3100-0154 | Driver side body with full height 48" wide forward and 62" wide rearward enhanced extended compartmentation. Includes (1) 56" wide compartment over the wheel well. | $12,962 |
| 3100-0155 | Driver side body with full height 60" wide forward and 56" wide rearward enhanced extended compartmentation. Includes (1) 56" wide compartment over the wheel well. | $13,809 |
| 3100-0156 | Driver side body with full height 30" wide forward and 36" wide rearward compartmentation. Includes (1) 56" wide compartment over the wheel well. Front and rear compartment opening height to be 66.75" high. | $9,878 |
| 3100-0159 | Driver side body with full height 42" wide forward and 56" wide rearward enhanced extended compartmentation. Includes (1) 56" wide compartment over the wheel well and one (1) storage tunnel and access door at rear. | $14,972 |
| 3100-0160 | Driver side body with full height 30" wide forward and 50" wide rearward enhanced extended compartmentation. Includes (1) 56" wide compartment over the wheel well. | $10,743 |
| 3100-0161 | Driver side body with 42" wide x 30" high wide forward lower compartmentation and 42" wide x 34.75" high forward upper compartmentation. 42" wide full height rearward compartmentation. Includes (1) 56" wide compartment over the wheel well. | $13,620 |
| 3100-0162 | 2-Arm Ladder Rack. The ladder rack includes amber lights on each end to visually indicate when the rack is in motion. Ladder rack to hold storage box with (1) vertically hinged rearward and (2) horizontally hinged outboard (when ladder rack in the down position) diamond plate doors with push button latches. The outboard horizontally hinged door(s) to have chains set to open at approx 160 degrees. Forward section of the box to hold (2) backboards and the rearward section to hold (1) stokes basket. | $17,737 |
| 3100-0163 | Driver side body with full height 50" wide forward and 50" wide rearward enhanced extended compartmentation. Includes (1) 56" wide compartment over the wheel well. | $12,170 |
| 3100-0164 | Driver side body with full height 56" wide forward and 56" wide rearward enhanced extended compartmentation. Includes (1) 56" wide compartment over the wheel well. | $12,962 |
| 3100-0165 | Driver side body with full height 62" wide forward and 62" wide rearward enhanced extended compartmentation. Includes (1) 56" wide compartment over the wheel well. | $13,750 |
| 3100-0166 | Driver side tunnel to hold: [#LOC]. | $614 |
| 3100-0168 | Driver side body with full height 30" wide forward and 50" wide rearward enhanced extended compartmentation. Includes (1) 56" wide compartment over the wheel well. Rear compartment to be pumper style enhanced extended (shallow upper and deep lower compartmentation). | $12,524 |
| 3100-0170 | Driver side body with 62" wide full height forward enhanced extended compartment 36" wide half height second forward compartment and 50" wide half height rearward compartmentation. | $17,814 |

| Item No. | Description | |
|---|---|---|
| 3100-0171 | Driver side body with full height 24" wide forward and 50" wide rearward extended compartmentation. Includes (1) 33" wide compartment over the wheel well and (1) Zico Overhead Ladder Rack. | $15,520 |
| 3100-0172 | Driver side body with full height 24" wide forward and 56" wide rearward extended compartmentation. Includes (1) 56" wide compartment over the wheel well. | $10,066 |
| 3100-0173 | Driver side body with full height 24" wide forward and 50" wide rearward enhanced extended compartmentation. Includes (1) 56" wide compartment over the wheel well. Rear compartment to be pumper style enhanced extended (shallow upper and deep lower compartmentation). | $13,308 |
| 3100-0174 | Driver side body with upper and lower compartmentation. Includes 36" wide forward and 50" wide rearward extended lower compartments and (3) opening upper compartments. | $15,132 |
| 3100-0175 | Driver side body with full height 36" wide forward and 36" wide rearward compartmentation. Includes (1) 56" wide compartment over the wheel well and one (1) storage tunnel. | $13,365 |
| 3100-0176 | Driver side body with full height 36" wide forward and 50" wide rearward enhanced extended compartmentation. Includes (1) 56" wide compartment over the wheel well and one (1) storage tunnel. | $14,232 |
| 3100-0177 | Driver side body with full height 42" wide forward and 42" wide rearward compartmentation. Includes (1) 56" wide compartment over the wheel well and one (1) storage tunnel. | $14,103 |
| 3100-0178 | Driver side body with full height 42" wide forward and 56" wide rearward enhanced extended compartmentation. Includes (1) 56" wide compartment over the wheel well and one (1) storage tunnel. | $14,972 |
| 3100-0179 | Driver side body with full height 48" wide forward and 48" wide rearward compartmentation. Includes (1) 56" wide compartment over the wheel well and one (1) storage tunnel. | $14,894 |
| 3100-0180 | Driver side body with full height 48" wide forward and 62" wide rearward enhanced extended compartmentation. Includes (1) 56" wide compartment over the wheel well and one (1) storage tunnel. | $15,763 |
| 3100-0181 | Driver side body with full height 60" wide forward and 42" wide rearward compartmentation. Includes (1) 56" wide compartment over the wheel well and one (1) storage tunnel. | $15,743 |
| 3100-0182 | Driver side body with full height 60" wide forward and 56" wide rearward enhanced extended compartmentation. Includes (1) 56" wide compartment over the wheel well and one (1) storage tunnel. | $16,607 |
| 3100-0183 | Driver side body with full height 36" wide forward and 50" wide rearward enhanced extended compartmentation (2008 body design) with (1) 56" wide compartment over the wheel well. | $16,595 |
| 3100-0185 | Driver side body with full height 20" wide forward and 50" wide rearward extended compartmentation. Includes (1) 56" wide compartment over the wheel well. | $9,024 |
| 3100-0186 | Driver side upper body extension. Does not include any external doors. External framework and platework only. Platework shall be recessed. | $2,130 |
| 3100-0187 | Stainless steel driver side body with full height 30" wide forward and 40" wide rearward compartmentation. Includes (1) 54" wide compartment over the wheel well. | $24,124 |
| 3100-0188 | Stainless steel driver side body with full height 40" wide forward and 40" wide rearward compartmentation. Includes (1) 54" wide compartment over the wheel well. | $25,461 |
| 3100-0189 | Stainless steel driver side body with full height 48" wide forward and 40" wide rearward compartmentation. Includes (1) 54" wide compartment over the wheel well. | $26,197 |
| 3100-0190 | Stainless steel driver side body with full height 30" wide forward and 58" wide rearward enhanced extended compartmentation. Includes (1) 54" wide compartment over the wheel well. | $25,003 |
| 3100-0191 | Stainless steel driver side body with full height 40" wide forward and 58" wide rearward enhanced extended compartmentation. Includes (1) 54" wide compartment over the wheel well. | $26,340 |
| 3100-0192 | Stainless steel driver side body with full height 48" wide forward and 58" wide rearward enhanced extended compartmentation. Includes (1) 54" wide compartment over the wheel well. | $27,079 |
| 3100-0194 | Stainless steel driver side body with full height/full depth 48" wide forward and 40" wide rearward compartmentation. Includes (1) 54" wide compartment over the wheel well. | $26,197 |
| 3100-0195 | Driver 3/4 side body with full height 36" wide forward and 36" wide rearward compartmentation. Includes (1) 56" wide compartment over the wheel well. | $6,171 |
| 3100-0196 | Driver half side body with (2) forward compartments (48" and 30" wide) and one rearward area for locating of side tank dump. | $4,811 |
| 3100-0197 | Driver half side body with (2) forward compartments (48" and 30" wide) and (1) rearward compartment (24"). | $5,661 |
| 3100-0198 | Driver 3/4 side body with (2) lower forward compartments (48" and 30" wide) (3) upper compartments (54") and one lower rearward area for locating of side tank dump. | $6,653 |
| 3100-0199 | Driver 3/4 side body with (2) lower forward compartments (48" and 30" wide) (3) upper compartments (54") and (1) lower rearward compartment (24"). | $7,498 |
| 3100-0201 | Driver full height side body with (2) lower forward compartments (48" and 30" wide) (3) upper compartments (54") and one lower rearward area for locating of side tank dump. | $8,496 |
| 3100-0202 | Driver full height side body with (2) lower forward compartments (48" and 30" wide) (3) upper compartments (54") and (1) lower rearward compartment (24"). | $9,342 |

| Item No. | Description | |
|---|---|---|
| 3100-0203 | Driver full height side body with (2) full height rescue style forward compartments (48" and 30" wide) (1) upper compartment (61" and offset rearward of the rack opening) and one lower rearward area for locating of side tank dump. | $8,496 |
| 3100-0204 | Driver full height side body with (2) full height rescue style forward compartments (48" and 30" wide) (1) upper compartment (61" and offset rearward of the rack opening) and (1) lower rearward compartment (24"). | $9,342 |
| 3100-0207 | Driver full height side body with (2) lower forward compartments (48" and 30" wide) (3) upper compartments (54") with rear compartment face access door for portable tank storage and one lower rearward area for locating of side tank dump. | $9,839 |
| 3100-0208 | Driver full height side body with (2) lower forward compartments (48" and 30" wide) (3) upper compartments (54") with rear compartment face access door for portable tank storage and (1) lower rearward compartment (24"). | $10,683 |
| 3100-0209 | Driver side body with full height 24" wide forward and 50" wide rearward enhanced extended compartmentation. Includes (1) 56" wide compartment over the wheel well. | $10,058 |
| 3100-0210 | Driver full height side body with (2) full height rescue style forward compartments (48" and 30" wide) (2) upper compartment (40" wide) and (1) lower rearward compartment (24"). | $9,342 |
| 3100-0211 | Driver full height side body with (2) full height rescue style forward compartments (48" and 30" wide) (2) upper compartments (40" wide) and one lower rearward area for locating of side tank dump. | $8,496 |
| 3100-0213 | Stainless steel driver side body with full height 48" wide forward and 48" wide rearward compartmentation. Includes (1) 54" wide compartment over the wheel well. | $26,989 |
| 3100-0214 | Stainless steel driver side body with full height 54" wide forward and 54" wide rearward compartmentation. Includes (1) 54" wide compartment over the wheel well. | $27,957 |
| 3100-0215 | Stainless steel driver side body with full height 60" wide forward and 60" wide rearward compartmentation. Includes (1) 54" wide compartment over the wheel well. | $28,925 |
| 3100-0216 | Compartment L1 to be 48.75" high in full depth lower area due to pipe routing for deck gun in hosebed storage pan. | $554 |
| 3100-0219 | Driver half side body with 42" wide forward and 42" wide rearward compartmentation. Includes adjustable ladder tracks. | $5,284 |
| 3100-0220 | Overhead Ladder Rack to be offset forward includes shifting compartment (rearward) over the wheel well. | $585 |
| 3100-0221 | Driver half side tandem body with 30" wide forward and 30" wide rearward compartmentation. | $7,218 |
| 3100-0222 | Driver half side tandem body with 42" wide forward and 42" wide rearward compartmentation. | $7,885 |
| 3100-0223 | Driver half side tandem body with 60" wide forward and 54" wide rearward compartmentation. | $8,652 |
| 3100-0224 | Driver 3/4 side tandem body with full height 30" wide forward and 30" wide rearward compartmentation. Includes (2) 51.5" wide compartments over the wheel well. | $8,359 |
| 3100-0225 | Driver 3/4 side tandem body with full height 42" wide forward and 42" wide rearward compartmentation. Includes (2) 51.5" wide compartments over the wheel well. | $9,191 |
| 3100-0226 | Driver 3/4 side tandem body with full height 60" wide forward and 54" wide rearward compartmentation. Includes (2) 51.5" wide compartments over the wheel well. | $10,147 |
| 3100-0227 | Driver side tandem body with upper and lower compartmentation. Includes 30" wide forward and 30" wide rearward compartments and (4) opening upper compartments. | $12,246 |
| 3100-0228 | Driver side tandem body with upper and lower compartmentation. Includes 42" wide forward and 42" wide rearward compartments and (4) opening upper compartments. | $13,584 |
| 3100-0229 | Driver side tandem body with upper and lower compartmentation. Includes 60" wide forward and 54" wide rearward compartments and (4) opening upper compartments. | $15,142 |
| 3100-0230 | Driver side tandem body with upper and lower compartmentation. Includes 30" wide forward and 30" wide rearward compartments and (4) opening upper compartments. Includes overhead rack opening centered between upper compartments. | $12,734 |
| 3100-0231 | Driver side tandem body with upper and lower compartmentation. Includes 42" wide forward and 42" wide rearward compartments and (4) opening upper compartments. Includes overhead rack opening centered between upper compartments. | $14,125 |
| 3100-0232 | Driver side tandem body with upper and lower compartmentation. Includes 60" wide forward and 54" wide rearward compartments and (4) opening upper compartments. Includes overhead rack opening centered between upper compartments. | $15,747 |
| 3100-0233 | Driver side tandem body with full height 30" wide forward and 30" wide rearward compartmentation. Includes (2) 51.5" wide compartments over the wheel well. | $11,817 |
| 3100-0234 | Driver side tandem body with full height 42" wide forward and 42" wide rearward compartmentation. Includes (2) 51.5" wide compartments over the wheel well. | $13,153 |
| 3100-0235 | Driver side tandem body with full height 60" wide forward and 54" wide rearward compartmentation. Includes (2) 51.5" wide compartments over the wheel well. | $14,680 |
| 3100-0236 | Driver side tandem body with full height 30" wide forward and 30" wide rearward compartmentation. Includes (2) 42" wide compartments over the wheel well and overhead rack opening centered between upper compartments. | $12,287 |

| Item No. | Description | |
|---|---|---|
| 3100-0237 | Driver side tandem body with full height 42" wide forward and 42" wide rearward compartmentation. Includes (2) 42" wide compartments over the wheel well and overhead rack opening centered between upper compartments.- | $13,677 |
| 3100-0238 | Driver side tandem body with full height 60" wide forward and 54" wide rearward compartmentation. Includes (2) 42" wide compartments over the wheel well and overhead rack opening centered between upper compartments. | $15,268 |
| 3100-0243 | Driver side body with full height 42" wide forward and 50" wide rearward compartmentation. Includes (1) 56" wide compartment over the wheel well. | $11,074 |
| 3100-0244 | Driver half side tandem body with with 42" wide forward and one rearward area for locating of side tank dump rearward of the wheel well. | $8,162 |
| 3100-0245 | Driver side body with full height 60" wide forward and 56" wide rearward compartmentation. Includes (1) 56" wide compartment over the wheel well. Side Mount eMAX only. | $12,941 |
| 3100-0246 | Driver side body with upper and lower compartmentation. Includes 36" wide forward and 31" wide rearward lower compartments and (2) opening upper compartments. | $10,304 |
| 3100-0247 | Driver side body with full height 46" wide forward and 56" wide rearward enhanced extended compartmentation. Includes (1) 56" wide compartment over the wheel well. L1 compartment to be Rescue Pumper style individual compartments. | $13,512 |
| 3100-0248 | Driver side body with full height 50" wide forward and 50" wide rearward compartmentation. Includes (1) 56" wide compartment over the wheel well. | $12,941 |
| 3100-0250 | Driver side body with full height 60" wide forward and 62" wide rearward enhanced extended compartmentation. Includes (1) 56" wide compartment over the wheel well. | $14,231 |
| 3100-0251 | Driver side body with full height 60" wide forward and 42" wide rearward compartmentation. Includes (1) 33" wide compartment over the wheel well and (1) Zico Overhead Portable Tank Rack. Rack to hold (1) 3000 gallon portable tank. | $18,036 |
| 3100-0252 | Driver side body with full height 42" wide forward and 56" wide rearward enhanced extended compartmentation. Includes (1) 56" wide compartment over the wheel well. | $12,721 |
| 3100-0253 | Driver full height side body with (3) full height rescue style forward compartments (39" and 39" wide and rearward of wheel well 24" wide)(1) upper compartment over the wheel well 56" wide. | $9,420 |
| 3100-0254 | Driver side body with upper and lower compartmentation. Includes 48" wide forward and 62" wide enhanced extended rearward lower compartments and (3) opening upper compartments. | $12,810 |
| 3100-0257 | Driver side body with full height 36" wide forward and 50" wide rearward enhanced extended compartmentation. Includes (1) 33" wide compartment over the wheel well and (1) Zico Overhead Ladder Rack. | $17,044 |
| 3100-0259 | Driver side diamond plate roof top compartment. Includes smooth plate painted vertical hinged access door at the rear with push button latch to be wired to door ajar indicator in cab. | $1,528 |
| 3100-0260 | Driver side body with full height 36" wide forward and 45" wide rearward compartmentation. Includes (1) 56" wide compartment over the wheel well. | $11,347 |
| 3100-0262 | Driver side body with full height 32" wide forward and 50" enhanced extended rearward compartmentation. Includes (1) 56" wide compartment over the wheel well. | $8,944 |
| 3100-0263 | Driver side body with full height 54" wide forward and 48" wide rearward compartmentation. Includes (1) 56" wide compartment over the wheel well. Side Mount eMAX only. | $12,131 |
| 3100-0264 | Driver side body with full height 26" and 56" wide forward compartments and 56" wide rearward compartmentation. Includes (1) 56" wide compartment over the wheel well. Side Mount eMAX only. | $14,290 |
| 3100-0265 | Driver side diamond plate roof top compartment. Includes (2) hinged lift-up access doors with turn latches and grab handle(s) and (1) vertical hinged access door at the rear with push button latch to be. Each lid to have (1) bracket mounted LED light and to be wired to door ajar indicator in cab. | $2,200 |
| 3100-0266 | Driver side body with full height/full depth 60" wide front and 54" wide rear compartment. Includes (1) 60" wide compartment over the wheel well. Side mount SS eMAX only. | $15,789 |
| 3100-0267 | Driver side tandem body with upper and lower compartmentation. Includes 60" wide forward and 54" wide rearward compartments and (1) opening forward upper compartment with painted panels rearward. | $16,205 |
| 3100-0270 | Rear aluminum smooth plate painted job color vertical hinged door on driver side roof top compartments. Includes thumb latch and wiring for door ajar switch. | $211 |
| 3100-0271 | Stainless steel driver side body with full height/full depth 36" wide front and 48" rear for reverse hinge compartment L1 door. Includes 54" wide compartment above rear wheels. | $27,586 |
| 3100-0273 | Driver side roof top compartment contents: (2) 6" x 10' hard suction hoses (not included) stored vertical. Includes vertical partition around hard suction hoses. | $1,044 |
| 3100-0274 | Driver side body with full height 36" wide forward and 56" wide rearward enhanced extended compartmentation. Includes (1) 56" wide compartment over the wheel well. Rescue Pumper individual style compartments. | $13,455 |

| Item No. | Description | |
|---|---|---|
| 3100-0275 | Driver side tandem body with upper and lower compartmentation. Includes 30" wide forward and 54" wide rearward compartments and (4) opening upper compartments. Includes offseting upper compartments forward due to deck gun location and access panel on upper rear compartment face to deck gun piping. | $13,592 |
| 3100-0277 | Driver side tandem body with 60" wide forward and 54" wide rearward compartmentation. Forward compartment to be full height rearward to be half height. | $10,662 |
| 3100-0279 | Driver side body with full height 54" wide forward and 36" wide rearward compartmentation. Includes (1) 56" wide compartment over the wheel well. Side Mount eMAX only. | $11,704 |
| 3100-0280 | Driver side roof top assembly. Does not include external upper doors or internal platework. External framework and platework only. | $1,535 |
| 3100-0281 | Driver side body with full height 36" wide forward and 36" wide rearward compartmentation. Includes (1) 56" wide compartment over the wheel well and 30 degree rear body angle for greater angle of departure. L1 compartment to be Rescue Pumper style individual compartments. | $11,670 |
| 3100-0283 | Driver half side body with (2) forward compartments (48" and 30" wide) and one rearward area for locating of side tank dump. Includes (1) 20" wide compartment above the lower forward comaprtment. | $5,283 |
| 3100-0285 | Driver side tandem body with full height 42" wide forward and 59" wide rearward compartmentation. Includes (2) 51.5" wide compartments over the wheel well. | $14,965 |
| 3100-0288 | Stainless steel driver side body with full height 54" wide front and 54" rear with reduced upper depth for "T" tank. Includes 54" wide compartment over rear wheels. | $27,409 |
| 3100-0289 | Stainless steel driver side body with full height 48" wide forward and 70" wide rearward enhanced extended compartmentation. Includes (1) 54" wide compartment over the wheel well. | $29,109 |
| 3100-0290 | Driver side body with full height 48" wide forward and 48" wide rearward compartmentations. Includes (1) 56" wide compartment over the wheel well and one (1) storage tunnel. Tunnel to be behind L2 and L3 compartments only. L1 compartment to be full depth full height with notch in upper rearward wall and boxed in cover for hard suction. | $16,385 |
| 3100-0291 | Driver side body with full height 48" wide forward and 48" wide rearward compartmentation. Includes (1) 56" wide compartment over the wheel well and one (1) storage tunnel. Tunnel to be behind L2 and L3 compartments only. L1 compartment to be full depth full height with notch in upper rearward wall and boxed in cover for hard suction. | $16,390 |
| 3100-0292 | Stainless steel driver side body high side 60" front and 60" rear. Five compartments tandem axle. For use with single arm overhead portable tank rack. | $18,221 |
| 3100-0293 | Driver side tandem body with upper and lower compartmentation. Includes 30" wide forward and 54" wide rearward compartments and (4) opening upper compartments. Includes offseting upper compartments forward due to deck gun location and access panel on upper rear compartment face to deck gun piping. | $13,592 |
| 3100-0294 | Driver side standard width roof top compartment contents: (2) 6" x 10' hard suction hoses (not included) stored vertical. The hard suction storage shall have a front wall which will prevent the hoses from sliding too far forward while also creating a full depth coffin storage area forward of the wall if applicable. | $332 |
| 3100-0295 | Driver side body with full height 26" and 56" wide forward compartments and 56" wide rearward compartmentation. Includes (1) 56" wide compartment over the wheel well for top mount application. | $14,290 |
| 3100-0298 | Stainless steel driver side short Boston style body with low height 36" front and 40" rear and (2) lift-up doors above. Includes 60" wide fender panel. For use with optional suicide hinged L1 door. | $26,484 |
| 3100-0299 | Driver side tandem body with full height (1) 60" wide forward and (1) 60" wide rearward compartmentation. For use with Rear Mount pump. | $18,174 |
| 3100-0300 | Driver side body with full height/full depth 60" wide front and 54" wide rear compartment. Includes (1) 60" wide compartment over the wheel well. Top mount SS eMAX only. | $15,789 |
| 3100-0301 | Stainless steel driver side body with full height 60" wide forward and 60" wide rearward compartmentation. Includes (1) 54" wide compartment over the wheel well. | $32,095 |
| 3100-0302 | Stainless steel driver side body with full height 48" wide forward and 58" wide rearward enhanced extended compartmentation. Includes (1) 60" wide compartment over the wheel well. Body interior height is 76" high. | $28,092 |
| 3100-0303 | Stainless steel driver side body with full height 48" wide forward and 54" wide rearward compartmentation. Includes (1) 54" wide compartment over the wheel well. | $27,079 |
| 3100-0304 | Driver side tandem body with (2) 34" wide forward and 54" wide rearward compartmentation. Forward compartments to be full height rearward to be half height. | $11,878 |
| 3100-0306 | (2) driver side roof top compartments with removable floors and extra width to inboard side. Includes hinged raised compartment lids with turn latches grab handle(s) and gas shock hold open and drain line(s) ran to below body. Each lid to have (1) bracket mounted LED light and to be wired to door ajar indicator in cab. | $6,545 |

| Item No. | Description | |
|---|---|---|
| 3100-0307 | (2) Driver side roof top compartments. Includes hinged raised aluminum smooth plate with black Scorpion coating (IPOS diamond plate) compartment lids with turn latches and grab handle(s). Each lid to have (1) bracket mounted LED light and to be wired to door ajar indicator in cab. | $2,961 |
| 3100-0308 | Driver side body with full height 60" wide forward and 54" wide rearward compartmentation. Includes (1) 60" wide compartment over the wheel well. Top mount SS eMAX only. | $19,205 |
| 3100-0309 | Driver side body with full height 30" and 60" wide forward compartments and 54" wide rearward compartmentation. Includes (1) 60" wide compartment over the wheel well. Side mount SS eMAX only. | $17,434 |
| 3100-0311 | Driver side body with full height 30" and 60" wide forward compartments and 54" wide rearward compartmentation. Includes (1) 60" wide compartment over the wheel well. Top mount SS eMAX only. | $17,434 |
| 3100-0313 | Driver side body with full height 50" wide forward and 42" wide rearward compartmentation. Includes (1) 56" wide compartment over the wheel well. Rear perimeter or body raised 3" for improved departure angle. Side Mount eMAX only. | $11,704 |
| 3100-0314 | Driver full height side body with upper and lower compartmentation. Includes 42" wide forward and 56" wide rearward lower enhanced compartmentation and (3) opening upper compartments. For use with ladder storage in the hosebed | $11,445 |
| 3100-0316 | Stainless steel driver side body with rescue style full height 30" front 40" rear and 60" wide fender panel L2 compartment. For use with suicide hinged L1 door (if applicable). | $26,484 |
| 3100-0317 | Horizontal partition located in driver side roof top compartment over DOT bottles. Floor to be provided above the DOT bottles to use remaining area above. | $918 |
| 3100-0318 | Driver side body with full height 48" wide forward and 56" wide rearward enhanced extended compartmentation. Includes (1) 56" wide compartment over the wheel well. | $12,962 |
| 3100-0319 | Driver side roof top compartment contents: (1) 10' hard suction hose (not included) stored horizontal. Includes stop bracket rearward of hard suction hoses and Nylatron compartment flooring. | $526 |
| 3100-0321 | Driver side body with upper and lower compartmentation. Includes 42" wide forward and 42" wide rearward lower compartments (3) opening upper compartments with portable water tank storage with access door at rear. Smooth plate compartment top painted black durabak. | $11,803 |
| 3100-0322 | Driver 3/4 side body with (3) full height rescue style (2) forward compartments (48" and 30" wide) and (1) rearward compartment (24"). Includes (1) 56" wide compartment over the wheel well. | $7,945 |
| 3100-0324 | Driver side roof top compartment. Includes vertically hinged access door at the rear with push button latch to be wired to door ajar indicator in cab. | $1,528 |
| 3100-0325 | (2) driver side roof top compartments with extra width to inboard side. Includes hinged raised compartment lids with turn latches grab handle(s) and gas shock hold open and drain line(s) ran to below body. Each lid to have (2) bracket mounted LED lights and to be wired to door ajar indicator in cab. | $5,340 |
| 3100-0326 | Driver side tandem body with upper and lower compartmentation. Includes 30" wide forward and 30" wide rearward compartments and (4) opening upper compartments. | $13,032 |
| 3100-0327 | Driver side body with full height 50" wide forward and 42" wide rearward compartmentation. Includes (1) 56" wide compartment over the wheel well. Rear perimeter or body raised 3" for improved departure angle. | $11,704 |
| 3100-0329 | Stainless steel driver side body with full height 48" wide forward and 48" wide rearward compartmentation. Includes (1) 54" wide compartment over the wheel well. | $27,675 |
| 3100-0331 | Driver side body with full height 24" wide forward and 36" wide rearward compartmentation. Includes (1) 56" wide compartment over the wheel well. Rear bottom corner of truck will be angled 30 degrees for a greater rear angle of departure. | $9,827 |
| 3100-0332 | Driver side body with full height 36" wide forward and 62" wide rearward enhanced extended compartmentation. Includes (1) 56" wide compartment over the wheel well. | $12,280 |
| 3100-0333 | Driver full height side body with 36" wide forward and 48" wide rearward compartmentation. Includes (2) 38" wide compartments over the wheel well and one forward area for side tank dump. For use with custom chassis only. | $9,818 |
| 3100-0334 | Driver side tandem body with full height 30" wide forward and 30" wide rearward compartmentation. Includes (2) 51.5" wide compartments over the wheel well. | $12,871 |
| 3100-0335 | Driver side body with full height 48" wide forward and 48" wide rearward compartmentation. Includes (1) 56" wide compartment over the wheel well. Compartment material to be 5083-H321. | $12,834 |
| 3100-0336 | Driver full height side body with 42" wide and 20" wide forward compartments and 42" wide rearward compartment. Includes (1) 56" wide compartments over the wheel well. For use with custom chassis only. | $9,818 |
| 3100-0337 | Driver side body with full height 48" wide forward and 54" wide rearward compartmentation. Includes (1) 56" wide compartment over the wheel well. | $12,310 |
| 3100-0339 | Driver 3/4 side body with upper and lower compartmentation. Includes 42" wide forward and 42" wide rearward lower compartments and (2) opening upper compartments. | $7,035 |

| Item No. | Description | |
|---|---|---|
| 3100-0340 | Driver side ERV body with full height 37" forward and 52" rearward. Includes (1) 56" wide compartment over the wheel well. Includes (2) roof top compartments with hinged raised lids with thumb latches grab handle(s) and gas shock hold open and drain line(s) ran to below body.Eack lid to have (1) bracket mounted LED light and to be wired to door aiar indicator in cab. | $18,785 |
| 3100-0341 | Driver side body with full height 24" wide forward and 36" wide rearward compartmentation. Includes (1) 56" wide compartment over the wheel well. | $9,827 |
| 3100-0342 | Driver side body with full height 38" wide forward and 56" wide rearward compartment. Includes (1) 56" wide compartment over the wheel well. | $12,170 |
| 3100-0343 | (2) Driver side roof top compartments. Includes hinged raised compartment lids with thumb latches and grab handle(s). Each lid to have (1) bracket mounted LED light and to be wired to door ajar indicator in cab. | $2,626 |
| 3100-0344 | Driver half side tandem body with (2)41" wide forward and (2)32" wide rearward compartmentation. | $11,687 |
| 3100-0345 | Stainless steel driver side body with full height 48" wide forward and 54" wide rearward compartmentation. Includes (1) 60" wide compartment over the wheel well. | $11,758 |
| 3100-0346 | Stainless steel driver side body with full height 40" wide forward and 40" wide rearward compartmentation with reduced upper depth. Includes (1) 60" wide compartment over the wheel well. | $9,588 |
| 3100-0347 | Stainless steel driver side body with full height/full depth 40" wide forward and 48" wide rearward compartmentation. Includes (1) 60" wide compartment over the wheel well. | $26,197 |
| 3100-0349 | Driver side roof top compartment contents: (1) 12'-14'+ hard suction hose (not included) stored horizontal. Includes Nylatron compartment flooring. Length of capacity depends on body configuration. | $612 |
| 3100-0350 | Notch compartment L1 in forward ceiling area to allow for hose bed preconnect piping to route down into pump module. | $402 |
| 3100-0351 | Driver side body with full height 48" wide forward and 62" wide rearward compartmentation. Includes (1) 56" wide compartment over the wheel well. | $12,182 |
| 3100-0352 | Stainless steel driver side body with full height 48" wide forward and 58" wide rearward enhanced extended compartmentation. Includes (1) 60" wide compartment over the wheel well. | $28,092 |
| 3100-0354 | Driver side body with full height 54" wide forward and 48" wide rearward compartmentation. Includes (1) 56" wide compartment over the wheel well. Top Mount eMAX Only. | $12,131 |
| 3100-0355 | (2) driver side roof top compartments with extra width to inboard side. Includes hinged raised compartment lids with turn latches grab handle(s) and gas shock hold open and drain line(s) ran to below body. Each lid to be wired to door ajar indicator in cab. | $5,117 |
| 3100-0357 | Driver 3/4 height side body with 20" wide and 42" wide forward compartments and 42" wide rearward compartment. Includes (1) 56" wide compartments over the wheel well. For use with custom chassis only. | $7,902 |
| 3100-0358 | Driver side body with full height 42" wide forward and 56" wide rearward compartmentation. Includes (1) 56" wide compartment over the wheel well. | $12,721 |
| 3100-0359 | Stainless steel driver side tanker body high side 52" front and 52" rear rescue style with Lord/coil spring torsion style body mounts. Four compartments tandem axle. | $20,336 |
| 3100-0360 | Stainless steel driver side special tall body with full height 40" wide forward and 58" wide rearward enhanced extended compartmentation. Includes (1) 54" wide compartment over the wheel well. | $27,079 |
| 3100-0361 | Stainless steel driver side body with full height/full depth 48" wide forward and 48" wide rearward compartmentation. Includes (1) 54" wide compartment over the wheel well. | $27,675 |
| 3100-0362 | Driver side body with full height 50" wide forward and 36" wide rearward compartmentation. Includes (1) 56" wide compartment over the wheel well. Rear perimeter of body raised 4" for improved departure angle. | $11,293 |
| 3100-0364 | Stainless steel driver side body with full height 40" wide forward and 58" wide rearward enhanced extended compartmentation. Includes (1) 60" wide compartment over the wheel well. | $26,868 |
| 3100-0365 | Driver 3/4 side body with full height 24" wide forward and 36" wide rearward compartmentation. Includes (1) 56" wide compartment over the wheel well. | $5,392 |
| 3100-0366 | (2) driver side roof top compartments. Includes hinged raised compartment lids with slam style D-ring latches and no grab handles. Each lid to have (1) bracket mounted LED light and to be wired to door ajar indicator in cab. | $2,751 |
| 3100-0367 | Driver side body with upper and lower compartmentation. Includes 42" wide forward and 42" wide rearward lower compartments and (2) opening upper compartments. | $10,996 |
| 3100-0368 | Driver side body with full height 26" and 30" wide forward compartments and 56" wide rearward compartmentation. Includes (1) 56" wide compartment over the wheel well. Side Mount eMAX only. | $14,290 |
| 3100-0369 | Driver side body with full height 60" wide forward and 42" wide rearward compartmentation. Includes (1) 33" wide compartment over the wheel well and (1) Zico Overhead Portable Tank Rack. Rack to hold (1) 2100 gallon portable tank. | $18,036 |

| Item No. | Description | |
|---|---|---|
| 3100-0370 | Driver side body with full height 42" wide forward and 42" wide rearward compartmentation. Includes (1) 56" wide compartment over the wheel well. | $11,093 |
| 3100-0371 | Stainless steel driver side body with full height 40" wide forward and 58" wide rearward extended compartmentation. Includes (1) 60" wide compartment over the wheel well | $26,586 |
| 3100-0372 | Driver side smooth plate roof top compartment and paited black Durabak. Includes smooth plate vertically hinged access door at the rear with push button latch and painted job color to be wired to door ajar indicator in cab. | $1,910 |
| 3100-0373 | (2) driver side roof top compartments with extra width to inboard side. Includes hinged raised compartment lids with turn latches grab handle(s) and gas shock hold open and drain line(s) ran to below body. Each lid to have (1) Amdor LED strip light and to be wired to door ajar indicator in cab. | $5,993 |
| 3100-0374 | Driver side roof top compartment contents: (2) 6" x 10' hard suction hoses (not included) stored horizontal side by side. Includes stop bracket rearward of hard suction hoses and partition over the hard suction hoses. | $1,044 |
| 3100-0375 | (2) driver side roof top compartments. Includes hinged raised compartment lids with turn latches and grab handle(s). Each lid to have (1) bracket mounted LED light and to be wired to door ajar indicator in cab. Includes fixed floor with hard suction storage below accessible through hinged rear panel access door with bent D-ring latch. | $3,455 |
| 3100-0377 | Driver side body with full height 42" and 40" wide forward compartments and 56" wide rearward compartmentation. Includes (1) 56" wide compartment over the wheel well. Side Mount eMAX only. | $14,804 |
| 3100-0379 | Driver Full height forward compartment and 3/4 side rear of L1 tandem body with 42" wide forward and 42" wide rearward compartmentation. Includes (2) 51.5" wide compartments over the wheel well. Lowered W/Well for extra compt heigth. Side Dump Valves between Tandems N/A. | $13,822 |
| 3100-0380 | (2) driver side roof top compartments. Includes hinged raised compartment lids with turn latches and grab handle(s). Each lid to have (3) bracket mounted EON LED lights and to be wired to door ajar indicator in cab. | $2,626 |
| 3100-0381 | Driver side tandem body with upper and lower compartmentation. Includes (2) 28" wide forward and 54" wide rearward compartments and (1) opening forward upper compartment with painted panels rearward. | $16,732 |
| 3100-0383 | Stainless steel driver side short Boston style body with low height 30" front and 40" rear and (2) lift-up doors above. Includes 60" wide fender panel. For use with optional suicide hinged L1 door. | $25,260 |
| 3100-0384 | Driver side tandem body with upper and lower compartmentation. Includes 60" wide full height forward and 54" wide half height rearward compartments and (1) opening forward upper compartment with painted panels rearward. | $16,736 |
| 3100-0386 | Driver side rear mount pumper body with full height 48" wide forward and 60" wide rearward compartmentation. Includes (1) 56" wide compartment over the wheel well and one (1) storage tunnel and access door at rear. | $16,837 |
| 3100-0387 | Driver side body with full height 60" wide forward and 48" wide rearward compartmentation. Includes (1) 56" wide compartment over the wheel well. Side Mount eMAX only. | $12,941 |
| 3100-0389 | Driver side body with full height 34" and 48" wide forward compartments and 56" wide rearward compartmentation. Includes (1) 56" wide compartment over the wheel well. Side Mount eMAX only. | $14,804 |
| 3100-0390 | Driver side body with full height 30" wide forward and 44" wide rearward compartmentation. Includes (1) 56" wide compartment over the wheel well. | $10,752 |
| 3100-0391 | Stainless steel driver side body with full height/full depth 60" wide forward and 60" wide rearward compartmentation. Includes (1) 60" wide compartment over the wheel well. | $29,937 |
| 3100-0392 | Driver side body with full height 26" and 50" wide forward compts 56" wide over wheel compt and 52" wide rearward compt. Includes slide-back rear side compt for engine access. Side Mount eMAX HS only. | $24,573 |
| 3100-0394 | Driver side rear mount rescue pumper body with full height 38" wide forward and 42" wide rearward compartmentation. Includes (1) 56" wide compartment over the wheel well and 30 degree angled rear body for improved angle of departure. | $12,170 |
| 3100-0395 | Driver full height body side with (1) 48" wide Full Height forward compartment (1) 30" wide lower forward compartment adjacent to w/well (2) upper compartments (57" wide each) the rearward upper having a rear compartment face access door for portable tank storage and (1) lower rearward compartment (24") to rear of the w/well. | $11,196 |
| 3100-0396 | Stainless steel driver side body with full height 54" wide forward and 48" wide rearward compartmentation. Includes (1) 60" wide compartment over the wheel well. | $29,890 |

| Item No. | Description | |
|---|---|---|
| 3100-0398 | (2) side low profile stepped interior roof top compartments with extra width to inboard side. Includes hinged raised compartment lids with turn latchesgas shock hold opens and drain line(s) ran to below body. Each lid to have (1) bracket mounted LED light and to be wired to door ajar indicator in cab. Lids shall be without grab handles for lowered OAH and shall have a stepped interior. | $5,355 |
| 3100-0399 | Driver half side body with 42" wide forward and 56" wide rearward extended compartmentation. For use with a drop down ladder rack. | $5,890 |
| 3100-0400 | Driver side body with upper and lower compartmentation. Includes 42" wide forward and 36" wide rearward lower compartments and (3) opening upper compartments. | $10,891 |
| 3100-0401 | Driver side rear mount rescue pumper body with full height 62" wide forward and 42" wide rearward compartmentation. Includes (1) 56" wide compartment over the wheel well and 30 degree angled rear body for improved angle of departure. | $14,148 |
| 3100-0402 | Driver side diamond plate roof top compartment. Includes smooth plate painted vertical hinged access door at the rear with D-Ring latch to be wired to door ajar indicator in cab. | $1,553 |
| 3100-0404 | Stainless steel driver side body with full height 40" wide forward and 40" wide rearward compartmentation. Includes (1) 60" wide compartment over the wheel well. | $26,601 |
| 3100-0405 | Driver side body with full height 30" wide forward and 60" wide rearward extended compartmentation. Includes (1) 56" wide compartment over the wheel well. | $11,034 |
| 3100-0406 | Stainless steel driver side body with full height 30" front 40" rear and 60" wide fender panel L2 compartment. | $25,313 |
| 3100-0407 | Driver side body with full height 36" wide forward and 56" wide rearward compartmentation. Includes (1) 56" wide compartment over the wheel well. For use on low hosebed body and individual compartments on the driver side. | $13,455 |
| 3100-0408 | L1 floor to have a cut-out rearward and near back wall for a recessed box as applicable to allow for 6000 psi DOT bottle to be located without interference. | $507 |
| 3100-0409 | (2) driver side roof top compartments. Includes hinged raised compartment lids with turn latches and grab handle(s). Each lid to have (1) bracket mounted ROM V4 LED strip light and to be wired to door ajar indicator in cab. | $2,983 |
| 3100-0410 | Driver side body with full height 34" and 30" wide forward compartments and 56" wide rearward compartmentation. Includes (1) 56" wide compartment over the wheel well. Side Mount eMAX | $14,840 |
| 3100-0411 | Driver full height side body with (3) full height rescue style forward compartments (48" and 30" wide) and (1) rearward compartment (24" wide) (1) upper compartment (56" wide). | $9,342 |
| 3100-0412 | Driver side body with full height 42 in. wide forward and 56 in. wide rearward enhanced extended compartmentation. Includes (1) 56 in. wide compartment over the wheel well. L1 compartment to be Rescue Pumper style full depth compartment. | $13,215 |
| 3100-0414 | Stainless steel driver side body with full height 48" wide forward and 48" wide rearward compartmentation. Includes (1) 60" wide compartment over the wheel well. | $32,095 |
| 3100-0415 | (2) driver side roof top compartments. Includes hinged raised compartment lids with turn latches and grab handle(s). Each lid to have (1) bracket mounted ROM V4 LED strip light and to be wired to door ajar indicator in cab. | $2,983 |
| 3100-0416 | Driver side body with full height 42in. wide forward and 62in. wide rearward enhanced extended compartmentation. Includes (1) 56in. wide compartment over the wheel well and one (1) storage tunnel. | $15,763 |
| 3100-0419 | Driver side body with full height 60" wide forward and 56" wide rearward compartmentation. Includes (1) 56" wide compartment over the wheel well. Rear perimeter or body raised 3" for improved departure angle. Side Mount eMAX only. | $12,941 |
| 3100-0420 | Drivers full height side body with 20" wide and 42" wide forward compartments and 42" wide rearward compartment. Includes (1) 56" wide compartments over the wheel well. For use with 30 high lower compt height only. | $9,818 |
| 3100-0421 | Driver side body with full height 44" wide forward and 36" wide rearward compartmentation and 60.75" opening. Includes (1) 56" wide compartment over the wheel well and 28.75" opening . | $12,136 |
| 3100-0423 | Driver side body with full height 36" wide forward and 50" wide rearward compartmentation. Includes (1) 56" wide compartment over the wheel well. Rescue Pumper individual style compartments. | $11,617 |
| 3100-0425 | (2) driver side roof top compartments with extra width to inboard side. Includes hinged raised compartment lids with turn latches grab handle(s) and gas shock hold open and drain line(s) ran to below body. Each lid to have (1) bracket mounted ROM V4 LED strip light and to be wired to door ajar indicator in cab. | $5,604 |
| 3100-0426 | Driver side body with full height 60" wide forward and 56" wide rearward compartmentation. Includes (1) 56" wide compartment over the wheel well and one (1) storage tunnel located behind the upper (3) compartment back walls. Top Mount eMAX Only. | $15,743 |
| 3100-0427 | Driver 3/4 side tandem body with 3/4 full height 42" wide forward (2) 3/4 compartments over the wheel well the forward 41.5" wide rearward to be 61.5" wide and a 3/4 full height 42" wide rearward compartment. Additionally there shall be a 3/4 full height 20" wide beavertail compartment. | $10,070 |

| Item No. | Description | |
|---|---|---|
| 3100-0428 | Drivers full height side body (FOR 4X4 Chassis) with 30" high lower compartment height (2) lower forward compartments (34" and 28" wide) ahead of wheel well (1) one lower rearward compartment 24" wide and (3) upper compartments (48.67" wide x 32" high opening) each transverse front to rear. | $9,342 |
| 3100-0429 | Driver side standard width roof top compartment contents: (2) 6" x 12' hard suction hoses (not included) stored vertical. The hard suction storage shall have a front wall which will prevent the hoses from sliding too far forward while also creating a full depth coffin storage area forward of the wall if applicable. | $332 |
| 3100-0430 | (2) driver side roof top compartments. Includes hinged raised compartment lids with turn latches and grab handle(s). Each lid to have (1) Amdor LED strip light and to be wired to door ajar indicator in cab. | $3,372 |
| 3100-0431 | Driver side tandem body with full height 48" wide forward and 48" wide rearward compartmentation. Includes (2) 51.5" wide compartments over the wheel well. | $13,920 |
| 3100-0432 | Stainless steel driver 3/4 side body with 40" wide forward and 58" wide rearward compartmentation rear for flat back body design. Includes (1) 60" wide compartment over the wheel well. | $23,017 |
| 3100-0433 | Driver side body with upper and lower compartmentation. Includes 30" wide forward and 50" wide rearward lower compartments and (3) opening upper compartments. | $10,752 |
| 3100-0434 | 2-arm ladder rack on driver side. The ladder rack includes amber lights on each end to visually indicate when the rack is in motion. Restricts the top folding step (if optioned) from closing completely. Mounting bracket for lights not required. | $11,875 |
| 3100-0435 | Driver side body with full height 26" and 50" wide forward compts 56" wide over wheel compt and 52" wide rearward compt. Includes slide-back rear side compt for engine access. HS only. | $24,573 |
| 3100-0436 | Stainless steel driver side body with rescue style full height 35" front 40" rear and 60" wide fender panel L2 compartment. | $27,499 |
| 3100-0437 | Driver side body with full height 60" wide forward and 52" wide rearward compartmentation. Includes (1) 56" wide compartment over the wheel well. Includes slide-back rear side compt for engine access. HS only. | $23,274 |
| 3100-0438 | Driver side rear mount rescue pumper body with full height 24" wide forward and 42" wide rearward compartmentation. Includes (1) 56" wide compartment over the wheel well and 30 degree angled rear body for improved angle of departure. | $11,181 |
| 3100-0439 | Driver full height side body with (2) full height rescue style forward compartments (48" and 30" wide) (2) upper compartment (42" wide) and (1) lower rearward compartment (28"). | $9,420 |
| 3100-0444 | Driver side body with upper and lower compartmentation. Includes full height 24" wide forward 30" high by 38" wide lower rear and 34" high by 38" wide upper rear compartmentation. Includes (1) 56" wide compartment over the wheel well. | $9,506 |
| 3100-0445 | Stainless steel driver side body with full height/full depth 54" wide forward and 54" wide rearward compartmentation. Includes (1) 60" wide compartment over the wheel well. | $28,794 |
| 3100-0446 | Driver side body with full height 30" wide forward and 52" wide rearward extended compartmentation. Includes (1) 56" wide compartment over the wheel well. | $10,752 |
| 3100-0447 | Driver full height side body with 66" wide forward and 42" wide rearward compartmentation. Includes (1) 56" wide compartment over the wheel well. The compartment opening height to be 30" IPO 34". For use with custom chassis only. | $9,604 |
| 3100-0449 | Stainless steel driver side body with full height 48" wide front and 58" rear with reduced upper depth for "T" tank. Includes 60" wide compartment over rear wheels. Upper compartments to be 15" deep. | $27,409 |
| 3100-0450 | Stainless steel driver side short Boston style body with low height 48" front and 40" rear and (3) lift-up doors above. Includes 60" wide fender panel. | $27,320 |
| 3100-0452 | Driver side tandem body with full height 60" wide forward and 54" wide rearward compartmentation. Includes (2) 51.5" wide compartments over the wheel well. Wheel wells and lower compartment height to lowered 4" over standard (Pumper/Rescue Pumper Height). | $14,680 |
| 3100-0455 | Driver side rear mount pumper body with two full height 48" wide forward compartments and 42" wide rearward compartment. Includes (1) 56" wide compartment over the wheel well and 30 degree angled rear body for improved angle of departure. | $17,684 |
| 3100-0456 | Driver side tandem body with 48" wide forward and 42" wide rearward compartmentation. Forward compartment to be full height rearward to be half height. | $10,662 |
| 3100-0457 | Driver side body with full height 30" wide forward and 50" wide rearward compartmentation. Includes (1) 56" wide compartment over the wheel well. | $10,108 |
| 3100-0458 | Driver side body with full height 42" wide forward and 42" wide rearward compartmentation. Includes (1) 56" wide compartment over the wheel well. | $10,565 |
| 3100-0460 | Stainless steel driver side body with full height 30" wide forward and 58" wide rearward extended compartmentation. Includes (1) 60" wide compartment over the wheel well | $26,586 |
| 3100-0461 | Driver side body with full height/full depth 60" wide front and 54" wide rear compartment. Includes (1) 60" wide compartment over the wheel well. Includes notch in upper rear compartment walls to provide for a level hose bed. Side mount SS eMAX only. | $16,011 |

| Item No. | Description | |
|---|---|---|
| 3100-0462 | Driver side body with full height 60" wide forward and 42" wide rearward compartments. Includes (1) 56" wide compartment over the wheel well. Side Mount e-MAX only. | $12,131 |
| 3100-0463 | Driver full height side body with 31" wide and 31" wide forward compartments and 42" wide rearward compartment. Includes (1) 56" wide compartments over the wheel well. | $9,818 |
| 3100-0467 | Roof top compartment contents: (1) 6in x 10ft hard suction hose (not included) stored in the lower area of roof top compartment. Includes stop bracket rear ward of hard suction hose if applicable to body length and partition surround over the hard suction hoses to accommodate storage area above and in front of the stored hose. Floor to include nylon pad as applicable for ease of deployment on scene. | $673 |
| 3100-0468 | Rear aluminum smooth plate painted job color vertical hinged door on roof top compartment. Includes D-ring latch and wiring for door ajar switch. | $213 |
| 3100-0471 | Stainless steel driver side body with full height 48" wide forward and 54" wide rearward compartmentation. Includes (1) 60" wide compartment over the wheel well. | $27,957 |
| 3100-0472 | Driver side body with full height 30 and 60" wide front and 54" wide rear compartments. Includes (1) 60" wide compartment over the wheel well and one (1) storage tunnel located behind reduced upper depth compartments. SS eMAX only. | $20,809 |
| 3100-0473 | (2) driver side roof top compartments. Includes hinged raised compartment lids with turn latches and grab handle(s). Each lid to include LED light (per specifications) and to be wired to door ajar indicator in cab. | $2,428 |
| 3100-0474 | Driver side body with full height 36" wide forward and 50" wide rearward enhanced extended compartmentation. Includes (1) 56" wide compartment over the wheel well. | $11,431 |
| 3100-0475 | Driver side body with upper and lower compartmentation. Includes 42" wide forward and 56" wide rearward lower compartments and (3) opening upper compartments. | $12,136 |
| 3100-0476 | Driver side diamond plate roof top compartment. Includes smooth plate painted vertical hinged access door at the rear with D-ring style latch to be wired to door ajar indicator in cab. | $1,528 |
| 3100-0477 | Stainless steel driver side body with full height 30" wide forward and 46" wide rearward compartmentation having Lord/coil spring torsion style body mounts. Includes a 60" wide compartment over the wheel well. Custom height in lower L3 for a special ALS shelving unit. | $25,003 |
| 3100-0479 | Stainless steel 96" wide driver side body with full height full depth 48" wide forward and 48" wide rearward compartmentation. Includes (1) 54" wide compartment over the wheel well. | $28,169 |
| 3100-0480 | Driver side body with full height 30" wide forward and 52" wide rearward enhanced extended compartmentation. Includes (1) 56" wide compartment over the wheel well. | $10,752 |
| 3100-0483 | Stainless steel driver side body with full height/full depth 36" wide front compartment and reduced depth upper 48" rearward compartmentation. Includes 60" wide compartment above rear wheels. | $27,586 |
| 3100-0484 | Stainless steel driver side body with full height 44" wide forward and 60" wide rearward compartmentation. Includes (1) 54" wide compartment over the wheel well. | $29,658 |
| 3100-0485 | Driver side body with full height 34" and 56" wide forward compartments and 56" wide rearward compartmentation. Includes (1) 56" wide compartment over the wheel well. Side Mount eMAX only. | $14,879 |
| 3100-0486 | Driver side tandem body with full height 54" wide forward and 48" wide rearward compartmentation. Includes (2) 51.5" wide compartments over the wheel well. Includes 30" high lower compartment height "Pumper Style" ilo 34" high. Side Dumps between or adjacent to Tandems are not available. | $14,680 |
| 3100-0487 | Stainless steel driver side body with full height full depth 48" wide forward and 58" wide rearward enhanced extended compartmentation. Includes (1) 60" wide compartment over the wheel well. Compartment height to be 78". | $28,548 |
| 3100-0488 | 2-arm ladder rack on driver side. The ladder rack includes amber lights on each end to visually indicate when the rack is in motion. Restricts the top folding step (if optioned) from closing completely. Includes mounting bracket (if required matching rear compartment face or compartment wrap finish) for components mounted on rear compartment face. | $11,875 |
| 3100-0489 | Stainless steel driver side body with full height 30" wide forward and 46" wide rearward compartmentation having Lord/coil spring torsion style body mounts. Includes a 66" wide compartment over the wheel well. Custom height in lower L3 for a special ALS shelving unit. | $25,003 |
| 3100-0490 | Driver side body with full height 60" wide forward and 46" wide rearward compartmentation. Includes (1) 56" wide compartment over the wheel well. Top Mount eMAX Only. | $12,363 |
| 3100-0491 | Driver side body with full height 36" wide forward and 56" wide rearward enhanced extended compartmentation. Includes (1) 56" wide compartment over the wheel well. | $11,074 |
| 3100-0492 | Driver half side body with 36" wide forward and 50" wide rearward enhanced extended compartmentation. Includes adjustable ladder tracks. | $5,818 |
| 3100-0493 | Stainless steel driver side body with full height 48" wide front and 48" wide rear compartments. Includes 60" wide compartment over rear wheels. | $27,024 |
| 3100-0494 | Stainless steel driver side body with full height/full depth 40" wide forward and 58" wide rearward extended compartment. Includes (1) 60" wide compartment over the wheel well. | $26,586 |

| Item No. | Description | |
|---|---|---|
| 3100-0495 | Driver side tandem body with two forward compartments ahead of the rear wheels and one rear compartment behind rear wheels. The forward front compartment to be 38" wide and full height the rearward front compartment to be 24" wide and half height. The single rear to be a half height 60" wide compartment. | $14,680 |
| 3100-0496 | Stainless steel driver side body with full height 35" wide forward and 48" wide rearward compartmentation. Includes (1) 60" wide compartment over the wheel well. | $27,499 |
| 3100-0497 | Rear aluminum smooth plate painted job color vertical hinged door on driver side roof top compartments. Includes D-Ring latch and wiring for door ajar switch. | $255 |
| 3100-0498 | Driver side roof top compartment contents: (1) 6" x 10' hard suction hose (not included) stored in lower rearward area of the roof top storage with Nylatron compartment flooring. Includes surround forward and above hard suction hose to allow for additional storage in remaining available roof top storage compartments accessible from top lift doors. | $690 |
| 3100-0499 | Driver side tandem body with full height 66" wide forward and 60" wide rearward compartmentation. Includes (2) 51.5" wide compartments over the wheel well. | $16,191 |
| 3100-0500 | Driver side body with upper and lower compartmentation. Includes 42" wide forward and 48" wide rearward lower compartments and (3) opening upper compartments. | $11,365 |
| 3100-0505 | Driver side body with full height 42" wide forward and 56" wide rearward enhanced extended compartmentation. Includes (1) 56" wide compartment over the wheel well and one (1) storage tunnel. | $14,972 |
| 3100-0506 | Driver side body with full height 35" wide forward and 47" wide rearward compartmentation. Includes (1) 56" wide compartment over the wheel well. | $12,998 |
| 3100-0507 | (3) driver side roof top compartments with extra width to inboard side (43"/43"/43"). Includes hinged raised compartment lids with thumb latches grab handle(s) and gas shock hold open and drain line(s) ran to below body. Each lid to have (1) bracket mounted LED light and to be wired to door ajar indicator in cab. | $6,136 |
| 3100-0508 | Driver side body with full height 42" wide forward and 56" wide rearward enhanced extended compartmentation. Includes (1) 56" wide compartment over the wheel well. | $11,445 |
| 3100-0511 | Stainless steel driver side body with full height full depth 48" wide forward and 48" wide rearward compartmentation. Includes (1) 60" wide compartment over the wheel well. | $27,704 |
| 3100-0512 | Vertical partition located in driver side roof top compartment at rear access door. Partition is to be full height of compartment and 61" long capped of at the end to create a boxed in area for separate storage. | $464 |
| 3100-0513 | Driver half side tandem body with (1) 44" wide first forward (1) 30" wide second forward and (1) 66" wide rearward compartments. Compartment height openings to be 30" IPO standard 34". | $11,687 |
| 3100-0514 | Driver side body with full height 40" wide forward and 56" wide rearward compartmentation. Includes (1) 56" wide compartment over the wheel well. | $12,093 |
| 3100-0516 | Driver side body with full height 42" wide forward and 56" wide rearward enhanced extended compartmentation. Includes (1) 56" wide compartment over the wheel well. | $11,445 |
| 3100-0517 | Compartment L1 to be notched for vertical exhaust in back forward corner of the compartment. | $277 |
| 3100-0518 | (2) side roof top compartments with extra width to inboard side. Includes hinged raised compartment lids with D-ring slam style latch (s) and no grab handles for reduced OAH impact with gas shock hold open(s) and drain line(s) ran to below body. Each lid to have (1) bracket mounted LED light and to be wired to door ajar indicator in cab. | $5,247 |
| 3100-0519 | Driver side body with full height 36" wide forward and 56" wide rearward compartmentation. Includes (1) 56" wide compartment over the wheel well. | $11,397 |
| 3100-0521 | Driver side body with upper and lower compartmentation. Includes 24" wide forward and 36" wide rearward lower compartments and (2) opening upper compartments. For use with 94"(96" with rubrail) wide body configuration. | $9,057 |
| 3100-0525 | Driver side body with full height 42" wide forward and 56" wide rearward extended compartmentation. Includes (1) 56" wide compartment over the wheel well. | $12,170 |
| 3105-0002 | Rear Mount forward body. Includes main side body structures and compartment L1/R1 L2/R2. | $14,917 |
| 3105-0005 | Hosebed walkway. Includes forward body headboard mod and rear body module walkway end partition. Walkway to be a slip resistant material. Walkway located to [#LOC] of the hosebed. | $1,848 |
| 3105-0006 | Rear Mount forward body compartments. Includes L1/R1 54" wide x 26" deep in the 56" lower area and 12" deep in the 12" upper area L2/R2 56" wide x 26" deep in the 22" lower area and 12" deep in the 12" upper area. | $1,477 |
| 3105-0008 | Rear Mount forward body. Includes main side body structures and compartment L1/R1 L2/R2 and a Zico overhead ladder rack (control located officer rear body/pump module). | $23,752 |
| 3105-0009 | Rear Mount forward body compartments with driver side storage tunnel. Includes L1 - 72" wide x 26" deep in the 30" lower area and 12" deep in the 34" upper area L2 - 56" wide x 12" deep R1 - 72" wide x 26" deep in the 56" lower area and 12" deep in the 12" upper area R2 - 56" wide x 26" deep in the 22" lower area and 12" deep in the 12" upper area. | $4,355 |

| Item No. | Description | |
|---|---|---|
| 3105-0010 | Rear Mount forward body. Includes main side body structures and compartment LT/RT L1/R1 L2/R2. LT/RT (full width and 95" high) with lower storage areas (compartment opening 67" wide and same height as main body compartments). Includes full width forward storage pan and a pan in the rearward center/officer area between the driver roof top compartment. Transverse floor to run full width. Rear headboard to have area for routing of plumbing for preconnects located in rearward area. Area above preconnects (forward area) to be for storage of a stokes basket. L1/R1 54" wide x 26" deep in the 56" lower area and 12" deep in the 12" upper area L2/R2 56" wide x 26" deep in the 22" lower area and 12" deep in the 12" upper area. | $30,387 |
| 3105-0011 | Rear Mount forward body compartments with driver side storage tunnel. Includes L1 - 54" wide x 26" deep in the 30" lower area and 12" deep in the 38" upper area L2 - 56" wide x 12" deep. R1 - 54" wide x 26" deep in the 56" lower area and 12" deep in the 12" upper area R2 - 56" wide x 26" deep in the 22" lower area and 12" deep in the 12" upper area. | $1,477 |
| 3105-0014 | Rear Mount forward body compartments. Includes L1/R1 - 60" wide x 26" deep in the 56" lower area and 12" deep in the 12" upper area L2/R2 - 56" wide x 26" deep in the 22" lower area and 12" deep in the 12" upper area. | $2,437 |
| 3105-0015 | Rear Mount forward body compartments. Includes L1/R1 - 66" wide x 26" deep in the 56" lower area and 12" deep in the 12" upper area L2/R2 - 56" wide x 26" deep in the 22" lower area and 12" deep in the 12" upper area. | $3,397 |
| 3105-0016 | Rear Mount forward body compartments. Includes L1/R1 - 72" wide x 26" deep in the 56" lower area and 12" deep in the 12" upper area L2/R2 - 56" wide x 26" deep in the 22" lower area and 12" deep in the 12" upper area. | $4,355 |
| 3105-0017 | Rear Mount forward body compartments with officer side Zico Overhead Ladder Rack. Includes L1/R1 - 54" wide x 26" deep in the 56" lower area and 12" deep in the 12" upper area L2 - 56" wide x 26" deep in the 22" lower area and 12" deep in the 12" upper area R2 - 33" wide x 26" deep in the 22" lower area and 12" deep in the 12" upper area (position of R2 depends on position of overhead ladder rack). | $1,477 |
| 3105-0018 | Rear Mount forward body compartments with officer side Zico Overhead Ladder Rack. Includes L1/R1 - 60" wide x 26" deep in the 56" lower area and 12" deep in the 12" upper area L2 - 56" wide x 26" deep in the 22" lower area and 12" deep in the 12" upper area R2 - 33" wide x 26" deep in the 22" lower area and 12" deep in the 12" upper area (position of R2 depends on position of overhead ladder rack). | $2,437 |
| 3105-0019 | Rear Mount forward body compartments with officer side Zico Overhead Ladder Rack. Includes L1/R1 - 66" wide x 26" deep in the 56" lower area and 12" deep in the 12" upper area L2 - 56" wide x 26" deep in the 22" lower area and 12" deep in the 12" upper area R2 - 33" wide x 26" deep in the 22" lower area and 12" deep in the 12" upper area (position of R2 depends on position of overhead ladder rack). | $3,397 |
| 3105-0020 | Rear Mount forward body compartments with officer side Zico Overhead Ladder Rack. Includes L1/R1 - 72" wide x 26" deep in the 56" lower area and 12" deep in the 12" upper area L2 - 56" wide x 26" deep in the 22" lower area and 12" deep in the 12" upper area R2 - 33" wide x 26" deep in the 22" lower area and 12" deep in the 12" upper area (position of R2 depends on position of overhead ladder rack). | $4,355 |
| 3105-0022 | Rear Mount forward body compartments with driver side storage tunnel. Includes L1 - 60" wide x 26" deep in the 30" lower area and 12" deep in the 38" upper area L2 - 56" wide x 12" deep. R1 - 60" wide x 26" deep in the 56" lower area and 12" deep in the 12" upper area R2 - 56" wide x 26" deep in the 22" lower area and 12" deep in the 12" upper area. | $2,437 |
| 3105-0023 | Rear Mount forward body compartments with driver side storage tunnel. Includes L1 - 66" wide x 26" deep in the 30" lower area and 12" deep in the 38" upper area L2 - 56" wide x 12" deep. R1 - 66" wide x 26" deep in the 56" lower area and 12" deep in the 12" upper area R2 - 56" wide x 26" deep in the 22" lower area and 12" deep in the 12" upper area. | $3,397 |
| 3105-0025 | Rear Mount forward body compartments with officer side storage tunnel. Includes L1 - 54" wide x 26" deep in the 56" lower area and 12" deep in the 12" upper area L2 - 56" wide x 26" deep in the 22" lower area and 12" deep in the 12" upper area. R1 - 54" wide x 26" deep in the 30" lower area and 12" deep in the 38" upper area R2 - 56" wide x 12" deep. | $1,477 |
| 3105-0026 | Rear Mount forward body compartments with officer side storage tunnel. Includes L1 - 60" wide x 26" deep in the 56" lower area and 12" deep in the 12" upper area L2 - 56" wide x 26" deep in the 22" lower area and 12" deep in the 12" upper area. R1 - 60" wide x 26" deep in the 30" lower area and 12" deep in the 38" upper area R2 - 56" wide x 12" deep. | $2,437 |
| 3105-0027 | Rear Mount forward body compartments with officer side storage tunnel. Includes L1 - 66" wide x 26" deep in the 56" lower area and 12" deep in the 12" upper area L2 - 56" wide x 26" deep in the 22" lower area and 12" deep in the 12" upper area. R1 - 66" wide x 26" deep in the 30" lower area and 12" deep in the 38" upper area R2 - 56" wide x 12" deep. | $3,397 |
| 3105-0028 | Rear Mount forward body compartments with officer side storage tunnel. Includes L1 - 72" wide x 26" deep in the 56" lower area and 12" deep in the 12" upper area L2 - 56" wide x 26" deep in the 22" lower area and 12" deep in the 12" upper area. R1 - 72" wide x 26" deep in the 30" lower area and 12" deep in the 38" upper area R2 - 56" wide x 12" deep. | $4,355 |

| Item No. | Description | |
|---|---|---|
| 3105-0034 | Rear Mount forward body. Includes main side body structures and compartment L1/R1 L2/R2 and (1) storage tunnel. | $20,660 |
| 3105-0036 | Rear Mount forward body. Includes main side body structures and compartment LT/RT L1/R1 L2/R2. LT/RT (full width and 95" high) with lower storage areas (compartment opening 67" wide and same height as main body compartments). Includes full width storage pan. Transverse floor to run full width. Rear headboard to have area for routing of plumbing for preconnects located in rearward area. The speedlay area to be stacked style and offset to rearward area of the transverse compartment. The upper speedlay area to hold (2) speedlay trays: (1) to hold - 200' of 2.5" DJ hose and (1) dry lay to hold - 100' of 1.75" DJ hose and 100' of 2.5" DJ hose. The lower speedlay area to hold (3) speedlay trays: (2) to hold 200' of 1.75" DJ hose each and (1) to hold 100' of 1.75" DJ hose. L1/R1 54" wide x 26" deep in the 56" lower area and 12" deep in the 12" upper area L2/R2 56" wide x 26" deep in the 22" lower area and 12" deep in the 12" upper area. | $30,387 |
| 3105-0037 | Transverse module (full width and height of the body) located forward of the body. Includes single 30" wide compartment opening per side (with a shallow lower area and a transverse upper area with full width smooth plate flooring). Upper area of transverse module to have diamond plate dunnage pan. | $11,102 |
| 3105-0038 | Transverse module (full width and height of the body) located forward of the body. Includes single 36" wide compartment opening per side (with a shallow lower area and a transverse upper area with full width smooth plate flooring). Upper area of transverse module to have diamond plate dunnage pan. | $12,579 |
| 3105-0039 | Transverse module (full width and height of the body) located forward of the body. Includes single 42" wide compartment opening per side (with a shallow lower area and a transverse upper area with full width smooth plate flooring). Upper area of transverse module to have diamond plate dunnage pan. | $14,055 |
| 3105-0040 | Transverse module (full width and height of the body) located forward of the body. Includes single 50" wide compartment opening per side (with a shallow lower area and a transverse upper area with smooth plate flooring). Rearward transverse compartment area to have double preconnects with removable trays (side by side) and backboard storage (rearward of preconnects with velcro straps). Upper area of transverse module to have diamond plate dunnage pan. | $12,401 |
| 3105-0041 | Transverse module (full width and height of the body) located forward of the body. Includes single 56" wide compartment opening per side (with a shallow lower area and a transverse upper area with smooth plate flooring). Rearward transverse compartment area to have double preconnects with removable trays (side by side) and backboard storage (rearward of preconnects with velcro straps). Upper area of transverse module to have diamond plate dunnage pan. | $13,878 |
| 3105-0042 | Transverse module (full width and height of the body) located forward of the body. Includes single 62" wide compartment opening per side (with a shallow lower area and a transverse upper area with smooth plate flooring). Rearward transverse compartment area to have double preconnects with removable trays (side by side) and backboard storage (rearward of preconnects with velcro straps). Upper area of transverse module to have diamond plate dunnage pan. | $15,354 |
| 3105-0043 | Transverse module (full width and height of the body) located forward of the body. Includes single 50" wide compartment opening per side (with a shallow lower area and a transverse upper area with smooth plate flooring). Rearward transverse compartment area to have triple preconnects with removable trays (side by side). Upper area of transverse module to have diamond plate dunnage pan. | $12,834 |
| 3105-0044 | Transverse module (full width and height of the body) located forward of the body. Includes single 56" wide compartment opening per side (with a shallow lower area and a transverse upper area with smooth plate flooring). Rearward transverse compartment area to have triple preconnects with removable trays (side by side). Upper area of transverse module to have diamond plate dunnage pan. | $14,311 |
| 3105-0045 | Transverse module (full width and height of the body) located forward of the body. Includes single 62" wide compartment opening per side (with a shallow lower area and a transverse upper area with smooth plate flooring). Rearward transverse compartment area to have triple preconnects with removable trays (side by side). Upper area of transverse module to have diamond plate dunnage pan. | $15,787 |
| 3105-0046 | Transverse module (full width and height of the body) located forward of the body. Includes single 50" wide compartment opening per side (with a shallow lower area and a transverse upper area with smooth plate flooring). Rearward transverse compartment area to have double preconnects with removable trays (stacked). Upper area of transverse module to have diamond plate dunnage pan. | $12,694 |
| 3105-0047 | Transverse module (full width and height of the body) located forward of the body. Includes single 56" wide compartment opening per side (with a shallow lower area and a transverse upper area with smooth plate flooring). Rearward transverse compartment area to have double preconnects with removable trays (stacked). Upper area of transverse module to have diamond plate dunnage pan. | $14,170 |

| Item No. | Description | |
|---|---|---|
| 3105-0048 | Transverse module (full width and height of the body) located forward of the body. Includes single 62" wide compartment opening per side (with a shallow lower area and a transverse upper area with smooth plate flooring). Rearward transverse compartment area to have double preconnects with removable trays (stacked). Upper area of transverse module to have diamond plate dunnage pan. | $15,646 |
| 3105-0049 | Preconnect module (stacked) for use with aluminum speedlay trays. Includes area for (2) stacked preconnect lower storage compartments with push button latches running boards and upper area dunnage pan. | $11,102 |
| 3105-0051 | Preconnect module to be capable of holding the following contents: Upper preconnect area to hold (1) 400' of 1.75" DJ with removable tray. Lower preconnect area to hold (1) 400' of 1.75" DJ with removable tray. | $868 |
| 3105-0052 | Preconnect module to be capable of holding the following contents: Upper preconnect area to hold (2) 200' of 1.75" DJ with removable trays. Lower preconnect area to hold 200' of 2.5" DJ with removable tray. | $1,300 |
| 3105-0053 | Preconnect module to be capable of holding the following contents: Upper preconnect area to hold (2) 200' of 1.75" DJ with removable trays. Lower preconnect area to hold (2) 200' of 1.75" DJ with removable trays. | $1,734 |
| 3105-0054 | Rear Mount forward body. Includes main side body structures and compartment L1/R1 L2/R2. | $19,668 |
| 3105-0056 | Preconnect module (stacked). Includes area for (2) stacked preconnect lower storage compartments with push button latches running boards upper area dunnage pan and horizontal backboard storage with drop down diamond plate access door (wired to door ajar). | $8,214 |
| 3105-0057 | Preconnect/Transverse module (full width and height of body). Includes (2) full width stacked speedlays (make standard size opening as used on normal width speedlay module). Each speedlay to be plumbed for use with 1.75" DJ hose. Area directly behind speedlays to have a transverse compartment (opening height to match body compartments). Transverse to include full width floor. Upper area to include a full width storage pan (forward of roof top compartments) and (1) pan located between the roof top compartments. Make pans as deep as practical. | $10,410 |
| 3105-0058 | Transverse module (full width and height of the body) located forward of the body. Includes single 30" wide compartment opening per side (with a shallow lower area and a transverse upper area with smooth plate flooring). Lower transverse compartment area to have triple preconnects with removable trays (side by side). Above the speedlay area to be storage for stokes basket. Upper area of transverse module to have diamond plate dunnage pan. | $11,666 |
| 3105-0059 | The outboard panels of the full width transverse module to be smooth plate overlays. These areas are to be seamless and painted job color. | $303 |
| 3105-0060 | Transverse module (full width and height of the body) located forward of the body. Includes single 30" wide compartment opening per side (with a shallow lower area and a transverse upper area with smooth plate flooring). Rearward transverse compartment area to have triple preconnects with removable trays (stacked (2) 1.5" on top and (1) 2.5" on bottom). Upper area of transverse module to have diamond plate dunnage pan. | $12,834 |
| 3105-0061 | Backboard storage sleeve with retaining strap. Located in LT/RT compartment forward of the speedlays to be 5" wide x 20" high. | $943 |
| 3105-0062 | Rear Mount body. Includes main side body structures and compartments L1/R1 L2/R2 L3/R3 and L4/R4. Includes interior compartment offset for pump panel location and mounting rear body structure for rear mounted pump application. | $36,351 |
| 3105-0066 | Rear Mount forward body compartments. Includes L1/R1 - 72" wide x 26" deep in the 56" lower area and 12" deep in the 12" upper area L2/R2 - 56" wide x 26" deep in the 22" lower area and 12" deep in the 12" upper area. An externally-mounted compartment top shall be provided and constructed of a 1/8" (.125") aluminum smooth plate with black Scorpion coating (IPOS diamond plate). | $4,690 |
| 3105-0067 | Transverse module (full width and height of the body) located forward of the body. Includes single 30" wide compartment opening per side (with a shallow lower area and a transverse upper area with smooth plate flooring). Rearward transverse compartment area to have triple preconnects with removable trays (stacked (2) 1.5" on top and (1) 2.5" on bottom). Upper area of transverse module to have a dunnage pan made of aluminum smooth plate with black Scorpion coating (IPOS diamond plate). The running boards shall be constructed of aluminum smooth plate with black Scorpion coating (IPOS diamond plate) | $13,418 |
| 3105-0068 | Preconnect module to be capable of holding the following contents: Upper preconnect area to hold (2) 200' of 1.75" DJ with removable poly trays. Lower preconnect area to hold 200' of 2.5" DJ with removable poly tray. | $1,300 |
| 3105-0069 | Preconnect module (stacked)for use with Poly trays. Includes area for (2) stacked preconnect lower storage compartments with push button latches running boards and upper area dunnage pan. | $11,565 |

| Item No. | Description | |
|---|---|---|
| 3105-0071 | Rear Mount forward body compartments. Includes L1/R1 - 44" wide x 26" deep in the 56" lower area and 12" deep in the 12" upper area L2/R2 - 44" wide x 26" deep in the 56" lower area and 12" deep in the 12" upper area L3/R3 - 56" wide x 26" deep in the 22" lower area and 12" deep in the 12" upper area L4 - (pump panel location upper section) - 46" wide x 24" high x 24" deep in the lower section and R4 - 46" wide x 24" deep in the 56" lower area and 12" deep in the 12" upper area. | $37,041 |
| 3105-0072 | Transverse module (full width and height of the body) located forward of the body. Includes single 24" wide compartment opening per side (with a shallow lower area and a transverse upper area with full width smooth plate flooring). Upper area of transverse module to have diamond plate dunnage pan. | $10,519 |
| 3105-0078 | Transverse module (full width and height of the body) located forward of the body. Includes single 38" wide compartment opening per side (with a shallow lower area and a transverse upper area with smooth plate flooring). Rearward transverse compartment area to have triple preconnects with removable trays (side by side). Upper area of transverse module to have diamond plate dunnage pan. | $9,878 |
| 3110-0000 | Center Slam Strip Rear End with (3) compartments- (2) lower and (1) upper and a diamond plate center strip for a Jet or Newton Dump application. Includes diamond plate panels. | $2,295 |
| 3110-0001 | Center Slam Strip Rear End with (3) compartments- (2) lower and (1) upper and a smooth plate center strip for a Jet or Newton Dump application. Includes smooth plate panels. | $2,295 |
| 3110-0002 | Upper and Lower Rear Compartment. Includes diamond plate panels. | $1,769 |
| 3110-0003 | Upper and Lower Rear Compartment. Includes smooth plate panels. | $1,769 |
| 3110-0004 | Full Height Rear Compartment. Includes diamond plate panels. | $1,243 |
| 3110-0005 | Full Height Rear Compartment. Includes smooth plate panels. | $1,243 |
| 3110-0006 | Full Height Rear Compartment with Upper Ladder Storage Compartment. Includes smooth plate panels. Includes area for storage of (1) 24' (1) 14' (1) 10' Attic (2) pike poles and a drop down storage access door with push button latches (wire to door ajar). | $2,120 |
| 3110-0007 | Full Height Rear Compartment. Includes diamond plate panels 30 degree angle of departure with flip down tailboard and handrails- (2) vertically on trailing edge of body and horizontally mounted handrail(s) below hosebed. | $2,714 |
| 3110-0008 | Full Height Rear Compartment. Includes smooth plate panels angled rear body with flip down tailboard and handrails- (2) vertical on trailing edge of body and horizontal mounted handrail(s) below hosebed. | $2,714 |
| 3110-0010 | Full Height Rear Compartment with Upper Ladder Storage Compartment. Includes area for storage of (1) 24' (1) 14' (1) 10' Attic (2) pike poles and a drop down storage access door with push button latches (wire to door ajar). | $2,120 |
| 3110-0011 | Full Height Rear Compartment with Upper Storage Compartment and Side Storage Tunnel. Includes smooth plate panels and storage access doors with push button latches. | $2,204 |
| 3110-0012 | Full Height Rear Compartment with Upper Storage Compartment and Officer Side Ladder Tunnel. Includes diamond plate panels and storage access doors with push button latches. | $2,204 |
| 3110-0013 | Full Height Rear Compartment with Officer Side Storage Tunnel. Includes smooth plate panels and storage access door with push button latch. | $1,156 |
| 3110-0014 | Full Height Rear Compartment with Officer Side Ladder Tunnel and Recessed Traffic Advisor. Includes smooth plate panels and storage door with push buton latch.. | $1,529 |
| 3110-0015 | Full Height Rear Compartment with Officer Side Storage Tunnel. Includes diamond plate panels and storage access door with push button latch. | $1,120 |
| 3110-0016 | Full Height Rear Compartment with Officer Side Ladder Tunnel and Recessed Traffic Advisor. Includes diamond plate panels and storage door with push button latch. | $1,529 |
| 3110-0017 | Full Height Rear Compartment with diamond plate panels. | $1,037 |
| 3110-0018 | Full Height Rear Compartment with smooth plate panels. | $1,037 |
| 3110-0019 | Full Height Rear Compartment with recessed traffic advisor and smooth plate panels. | $1,446 |
| 3110-0020 | Full Height Rear Compartment with recessed traffic advisor and diamond plate panels. | $1,446 |
| 3110-0021 | Rear mount rear end with upper storage area and lower pump panel. Includes 12" bolt-on tailboard smooth plate panels and upper access area door with push button latches. | $1,718 |
| 3110-0023 | Rear mount rear end with upper storage area lower pump panel area and officer side ladder/equipment tunnel. Includes 12" bolt-on tailboard smooth plate panels upper access area and ladder/equipment storage doors with push button latches. | $1,799 |
| 3110-0024 | Stainless Steel rear end with lower center compartment. Includes 12" bolt-on diamond plate tailboard and handrails- (2) vertically on trailing edge of body and horizontally mounted handrail(s) below hosebed. | $2,453 |
| 3110-0025 | Stainless steel rear end with lower center compartment. | $2,623 |
| 3110-0027 | Rear of body to have un-painted extrusions with un-painted smooth plate body panels or just unpainted smooth plate to facilitate rear body striping. | $256 |
| 3110-0028 | Rear body panels to be painted smooth plate. | $899 |
| 3110-0033 | Single low rear compartment. For use with low hosebed. Includes diamond plate panels. | $933 |
| 3110-0035 | Upper rear compartment depth to be approximately 25" deep. | $279 |

| Item No. | Description | |
|---|---|---|
| 3110-0037 | Full Height Rear Compartment. Includes diamond plate panels recessed traffic advisor and full width rear intermediate step located below the recessed advisor. B1 compartment to have no louvers. Includes access panel on bottom of compartment break to be 7" wide x 32" long. Panel to be centered front to back and side to side. | $2,270 |
| 3110-0038 | Bolt-on diamond plate tailboard (full width of rear compartment). Includes the enhanced extended side compartment frame work with diamond plate compartment tops (3) folding steps- (2) low and (1) high officer side with a 12" handrail (as applicable) and handrails- (2) vertically on trailing edge of body and horizontally mounted handrail(s) below hosebed. | $867 |
| 3110-0039 | Bolt-on diamond plate tailboard (full width of body). Includes (2) handrails- (1) vertical on officer body and (1) horz below hosebed aluminum ladder (angled) on offier side from tailboard to top edge of body and (3) Cast Products steps (staggered) on driver side. | $3,018 |
| 3110-0040 | Compartment B1 to be 30" deep IPOS 26" deep. | $878 |
| 3110-0042 | Single low rear compartment. For use with low hosebed. Includes smooth plate panels. | $991 |
| 3110-0043 | Full Height Rear Compartment with Full Width Upper Storage Compartment. Includes officer side area for storage of (1) 10' Attic (7) pike poles and a drop down storage access door with push buton latches (wire to door ajar). Includes driver side area for storage of backboards and a drop down storage access door with push buton latches (wire to door ajar). Includes (1) divider located 25" off officer's side wall. Includes diamond plate panels. | $2,520 |
| 3110-0044 | Bolt-on diamond plate 10" tailboard (full width of body). Includes handrails- (2) mounted vertical on trailing edge of body and horizontal mounted handrail(s) below hosebed. | $1,044 |
| 3110-0045 | Upper and Lower Rear Compartment with Officer Side Ladder Tunnel. Includes smooth plate panels and storage access door with push button latches. | $2,755 |
| 3110-0046 | Enhanced extended rear compartmentation for Rescue Pumper. Includes 14" of additional interior width to the rear side compartments and 25" of additional depth in the rearward 14" wide section. Overall interior height will vary depending on additional option selections. | $1,939 |
| 3110-0047 | Full Height Rear Compartment with Full Width Upper Ladder Storage Compartment with smooth plate panels. Includes area for storage of (1) 24' (1) 14' (1) 10' Attic (2) pike poles (1) stokes basket drop down storage access door with push button latches (wire to door ajar) and retaining straps for tunnel contents. Includes channels each side of ladder tunnel for discharges to terminate. | $3,178 |
| 3110-0048 | Enhanced extended rear compartmentation for Rescue Pumper. Includes 14" of additional interior width to the rear side compartments and 25" of additional depth in the rearward 14" wide section. Overall interior height will vary depending on additional option selections. Includes bolt-on diamond plate tailboard (full width of rear compartment) and handrails- (2) vertically on trailing edge of body and horizontally mounted handrail(s) below hosebed. | $2,680 |
| 3110-0049 | Bolt-on diamond plate tailboard (full width of rear compartment). Additional 10" of tailboard to run full width of body ("T" shaped tailboard). Includes the enhanced extended side compartment frame work with diamond plate compartment tops (1) officer side lower area folding step. Driver side includes (1) upper hosebed mounted handrail (as applicable) and handrails- (2) vertical on trailing edge of body and horizontal mounted handrail(s) below hosebed. | $2,335 |
| 3110-0050 | Upper Storage Compartment to hold (1) stokes basket in place of standard ladder components. Stokes basket to be located on officer side of storage tunnel. Stop bracket included. | $170 |
| 3110-0051 | B1 compartment to have no door. Includes removal of compartment lights and door ajar. | $374 |
| 3110-0052 | Bolt-on diamond plate tailboard (full width of rear compartment). Includes the enhanced extended side compartment frame work and handrails- (2) vertical on trailing edge of body and horizontal mounted handrail(s) below hosebed. | $1,112 |
| 3110-0053 | Bolt-on diamond plate tailboard (full width of rear compartment). Additional 10" of tailboard to run full width of body ("T" shaped tailboard). Includes the enhanced extended side compartment frame work and handrails- (2) vertical on trailing edge of body and horizontal mounted handrail(s) below hosebed. | $2,335 |
| 3110-0054 | Rear Mount Rear Body. Includes rear body side structures with compartment L3/R3 interior compartment offset for pump panel location and mounting rear body structure for rear mounted pump application (includes painted job color smooth plate panels outboard of pump access/panel(s) and rear body hosebed. | $13,928 |
| 3110-0056 | Compartment preconnect hose feed thru. Includes smooth plate doors with push button latches. Locate to [#LOC] just outboard of the rear pump panel. | $2,083 |
| 3110-0057 | Lower Rear Compartment only. Upper section to be diamond plate panel. Includes diamond plate panels. | $1,075 |
| 3110-0060 | Full Height Rear Compartment with Upper Ladder Storage Compartment. Includes diamond plate panels. Includes area for misc. storage and a drop down storage access door with push button latches (wire to door ajar). | $2,120 |
| 3110-0062 | Upper Storage Compartment to hold (1) backboard in place of standard ladder components. Backboard to be located on officer side of storage tunnel. Includes stop bracket located at apporximately 80". | $301 |

| Item No. | Description | |
|---|---|---|
| 3110-0063 | Full Height Rear Compartment with Upper Storage Compartment. Includes smooth plate panels. Includes area for misc. storage and a drop down storage access door with push button latches (wire to door ajar). | $2,120 |
| 3110-0064 | Upper Storage Compartment to have (1) bolt-in compartment 24" deep. Compartment for storage of misc. items. Includes holding center divider for lower hosebed short to allow room for compartment. | $598 |
| 3110-0065 | Full Height Rear Compartment with Officer Side Ladder Tunnel. Includes officer side rear tunnel access door with latch (material to match rearend platework). | $1,156 |
| 3110-0066 | Full Height Rear Compartment. | $1,037 |
| 3110-0067 | Lower Rear Compartment only. Upper section to be diamond plate panel. Includes diamond plate panels. Additional diamond plate area just above compartment for mounting of recessed directional lightbar. | $5,968 |
| 3110-0068 | Center Slam Strip Rear End with (3) compartments - (2) lower and (1) upper and a smooth plate center strip for a Jet or Newton Dump application. Includes smooth plate panels. Includes area above upper compartment for directional lightbar. | $4,740 |
| 3110-0069 | Full Height Rear Compartment with Upper Storage Compartment and Officer Side Ladder Tunnel. Includes diamond plate panels and storage access doors with Tri-Mark model 030-1300 door latches. The upper tunnel to have on the officer side a stop at 128" and on the driver side a stop at 72" from rear of truck. | $2,682 |
| 3110-0070 | Upper and Lower Rear Compartment. Includes smooth plate panels. B1 to be 36" wide due to enhanced extended feature and vertically hinged door(s). | $2,483 |
| 3110-0071 | Spacer panel(s) for recess/warning lighting. Located:[#LOC]. Panel(s) tol be painted job color and to iinclude mounting area for any and all lighting mounted in area. | $291 |
| 3110-0073 | Upper rear compartment depth to be approximately 29" deep. | $517 |
| 3110-0074 | Full Height Rear Compartment with Officer Side Ladder Tunnel. Includes smooth plate panels and storage access door with push button latch. Includes a 18" channel for (2) tank inlets and (1) 5" jet dump located 16" up from bottom of compartment opening. Includes area above the channel for mounting of a booster reel. The lower opening to have double door and the upper opening to have a dutch door. | $4,717 |
| 3110-0075 | Full Height Rear Compartment with Officer Side Ladder Tunnel. Includes diamond plate panels and storage access door with push button latch(es). Includes stepped upper horizontal tube to reduce hosebed height from ground over tank and driver side hosebed area. | $2,900 |
| 3110-0076 | Full Height Rear Compartment with Officer Side Ladder Tunnel. Includes diamond plate panels and storage access door with D-ring latch. | $1,120 |
| 3110-0078 | Lower Rear Compartment only. Upper section to be smooth plate panel. Includes smooth plate panels. | $1,075 |
| 3110-0080 | Center Slam Strip Rear End with smooth plate center strip for a Jet or Newton Dump application. Includes smooth plate low side panels and diamond plate upper panel. | $2,020 |
| 3110-0081 | Full Height Rear Compartment with Officer Side Ladder Tunnel. Includes smooth plate panels and storage access door with D-ring latch. | $1,156 |
| 3110-0083 | Half length offcir side tunnel. Reduces officer side upper compartment depths of R2 and R3 to 12" deep IPO 26". | $2,105 |
| 3110-0085 | Upper and Lower Rear Compartment. Includes upper and lower sanded smooth plate panels. Upper rear compartment door to be offset to driver side constructed of smooth plate. Upper rear compartment to be 56" wide for little giant ladder storage. (2) 1.5" x 4" extrusions to be stacked between upper and lower compartments for directional light mounted under intermediate rear step. | $2,299 |
| 3110-0086 | Bolt-on diamond plate 24" tailboard (full width of hosebed). Includes handrails- (2) vertical mounted on trailing edge of body and (1) horizontal mounted handrail(s) below hosebed. | $1,109 |
| 3110-0087 | Full Height Rear Compartment with Upper Storage Compartment and Officer Side Ladder Tunnel. Includes smooth plate panels and storage access doors with Tri-Mark door latches. | $2,756 |
| 3110-0088 | Full Height Rear Compartment with Officer Side Ladder Tunnel. Includes diamond plate panels and storage access door with push button latch. Officer side to have Rescue Pumper and Driver to have Pumper style enhanced extended. | $4,430 |
| 3110-0090 | Handrail above B1 and below the hosebed will be "split". Each handrail to be approximately 18" and installed approximately 6" offset of centerline of B1 to allow for a 12" gap at center. | $522 |
| 3110-0093 | Full Height Rear Compartment with Driver Side Storage Tunnel. Includes smooth plate panels and storage access door with push button latch. | $1,156 |
| 3110-0094 | Full Height Rear Compartment with Upper Storage Compartment and Driver Side Storage Tunnel. Includes smooth plate panels and storage access doors with push button latches. | $2,204 |
| 3110-0095 | Full Height Rear Compartment with Driver and Officer Side Storage Tunnels. Includes smooth plate panels and storage access doors with push button latches. | $1,275 |
| 3110-0096 | Full Height Rear Compartment with Upper Storage Compartment Driver and Officer Side Storage Tunnels. Includes smooth plate panels and storage access doors with push button latches. | $2,466 |

| Item No. | Description | |
|---|---|---|
| 3110-0097 | Bolt-on smooth plate tailboard (full width of rear compartment). Tailboard to include gator grip and be black duraback painted. Includes the enhanced extended side compartment frame work (2008 design) and handrails- (2) vertically on trailing edge of body and horizontally mounted handrail(s) below hosebed. Handrails to include center stanchion. | $1,683 |
| 3110-0099 | NFPA hose bed access ladder. Zico model RL12 for increased visibility of rear outboard body mounted DOT/NFPA lighting. Includes required step lights and additional hand rail(s) if applicable. Location: [#LOC]. | $1,743 |
| 3110-0100 | Backboard stop bracket to be located approximately 76" back in officer side of ladder tunnel. | $241 |
| 3110-0101 | Compartment preconnect hose feed thru. Includes smooth plate doors with push button latches. Locate to [#LOC] just outboard of the rear pump panel. | $1,263 |
| 3110-0102 | Upper Storage Compartment to hold (2) backboards in place of standard ladder components. Backboard to be located on officer side of storage tunnel. Includes stop bracket located at approximately 74". | $598 |
| 3110-0103 | Bolt-on diamond plate tailboard (full width of rear compartment). Includes the enhanced extended side compartment frame work with diamond plate compartment tops (embossied IPO Gator Grip due to department mounting of hose storage connectors in this area) and (1) driver and officer side lower area folding step (NO steps on driver or officer side upper areas). Main hosebed access is to be from the driver side of the pump module access ladder). Includes handrails- (2) vertically on trailing edge of body and horizontally mounted handrail(s) below hosebed. | $976 |
| 3110-0104 | (2) vertically mounted booster reel roller assemblies. Locate (1) each side inboard side of the enhanced extended area (as far outboard as applicable). For use with rear compartment mounted booster reel. | $488 |
| 3110-0105 | Upper Storage Compartment to hold (1) 17' Little Giant ladder and (1) backboard in place of standard ladder components. Little giant ladder to be located on officer side of storage tunnel stop bracket included approximately 113" back from opening ladder to be stored in unfolded position. Backboard to be located in aluminum box hanging from upper area of officer side tunnel. Tunnel divider to be held 6" short from opening. | $598 |
| 3110-0106 | Rear Mount pump/ladder tunnel access door. Includes single center mounted D-Ring latch and (2) hold open devices. Door to be [#LOC]. Door to open to 90 degrees and includes pull strap for access from ground. | $492 |
| 3110-0107 | Upper and Lower Rear Compartment. Includes smooth plate panels. Includes a 19" channel for (2) tank inlets and (1) 5" jet dump located between the upper and lower non-transverse style compartments. The lower compartment height to be 15". | $3,794 |
| 3110-0109 | Upper and Lower Rear Compartment. Includes smooth plate lower panels outboard of B1 and diamond plate upper panels outboard of B2. The B1 compartment to be 42" wide and B2 compartment to be 38" wide. Includes (2) 1.5" x 4" extrusions to be stacked between upper and lower compartments for directional light mounted under intermediate rear step. | $3,701 |
| 3110-0110 | Rear Mount Rear Body. Includes rear body side structures with compartment L3/R3 interior compartment offset for pump panel location and mounting rear body structure for rear mounted pump application. Includes painted job color smooth plate panels (and storage access door with push button latch if applicable) outboard of pump access/panel(s) and rear body hosebed. | $9,836 |
| 3110-0111 | Upper and Lower Rear Compartment. Includes smooth plate lower panels outboard of B1 and diamond plate upper panels outboard of B2. Includes (2) 1.5" x 4" extrusions to be stacked between upper and lower compartments for directional light mounted under intermediate rear step and back-up camera to be mounted centered in front of directional lightbar. The upper compartment to be offset to officer side due to rear discharge options. | $3,701 |
| 3110-0113 | Bolt-on diamond plate 12" tailboard with Gator Grip (full width of body). Includes hand rails- (2) vertical on trailing edge of body and horizontal mounted hand rail(s) below hose bed. | $1,044 |
| 3110-0114 | Bolt-on diamond plate 12" tailboard full width of body with Bustin Tread. This provides a flat back body design. Includes hand rails (2) vertically on trailing edge of body and horizontally mounted hand rail below hose bed. | $1,044 |
| 3110-0115 | Bolt-on diamond plate 12" tailboard with Gator Grip (full width of body). Includes (2) squared off beavertails with hand rails- (2) vertically on trailing edge of body and horizontally mounted hand rail below hose bed. | $782 |
| 3110-0116 | Bolt-on diamond plate 12" tailboard full width of body with Bustin Tread. Includes (2) squared off beavertails with hand rails (2) vertically on trailing edge of beavertails and horizontally mounted hand rail below hose bed. | $782 |
| 3110-0117 | Bolt-on diamond plate 20" tailboard with Gator Grip. Includes hand rails- (2) vertically on trailing edge of body and horizontally mounted hand rail(s) below hose bed. | $971 |
| 3110-0118 | Bolt-on diamond plate 20" tailboard between rear side compartments with Bustin Tread. Includes hand rails (2) vertically on trailing edge of body and horizontally mounted hand rail below hose bed. | $971 |

| Item No. | Description | |
|---|---|---|
| 3110-0119 | Bolt-on diamond plate 20" tailboard with Gator Grip (full width of body). Includes (2) squared off beavertails with hand rails- (2) vertically on trailing edge of body and horizontally mounted hand rail(s) below hose bed. | $971 |
| 3110-0120 | Bolt-on diamond plate 20" tailboard with Bustin Tread (full width of body). Includes (2) squared off beavertails with hand rails (2) vertically on trailing edge of body and horizontally mounted hand rail below hose bed. | $971 |
| 3110-0121 | Bolt-on diamond plate 20" tailboard with Gator Grip (full width of body). Includes (2) slanted beavertails with removable outer panels and hand rails- (2) vertically on trailing edge of body and horizontally mounted hand rail(s) below hose bed. | $971 |
| 3110-0122 | Bolt-on diamond plate 20" tailboard with Bustin Tread (full width of body). Includes (2) slanted beavertails and hand rails (2) vertically on trailing edge of body and horizontally mounted hand rail below hose bed. | $971 |
| 3110-0123 | Lower rear stainless steel short compartment B1 46" wide x 35" high x 26" deep. Includes bolt-on intermediate step above. Entire rear panel to be smooth aluminum plate for Chevron graphics. | $1,075 |
| 3110-0124 | Lower rear stainless steel tall compartment B1 46" wide x 45" high x 26" deep. Includes bolt-on intermediate step above. Entire rear panel to be smooth aluminum plate for Chevron graphics. | $1,243 |
| 3110-0125 | Upper Storage Tunnel to have bolt-in side panels to enclose the sides of the tunnel. | $598 |
| 3110-0126 | Upper and Lower Rear Compartment with Driver and Officer Side Storage Tunnels. Includes smooth plate panels. Includes a 19" area for (1) tank inlet and (1) 5" jet dump located between the upper and lower compartments. The lower compartment height to be 17". The upper compartment to be full height and depth includes bolt-in floor for access to plumbing components. Driver side tunnel opening to be narrowed to allow non-recessed folding step. | $4,069 |
| 3110-0127 | Bolt-on diamond plate 18" tailboard (full width of body). Includes (2) slanted beavertails (no stanchions) with removable outer panels and handrails- (2) vertically on trailing edge of body and horizontally mounted handrail(s) below hosebed. Upper beavertail to be 8.75 due to folding steps. | $1,213 |
| 3110-0128 | Full Height Rear Compartment with smooth plate panels. The rear compartment to be 36" due to the enhanced extended compartment and double door options. | $1,368 |
| 3110-0129 | Full Height Rear Compartment with Officer Side Storage Tunnel. Includes smooth plate panels and storage access door with push button latch. The rear compartment to be 36" due to the enhanced extended compartment and double door options. | $1,487 |
| 3110-0130 | Rear end tanker. Includes smooth plate upper and lower panels and a smooth plate center strip for a Jet or Newton Dump application. | $623 |
| 3110-0131 | Full Height Rear Compartment with Officer Side Storage Tunnel. Includes smooth plate panels and storage access door with push button latch. Includes stepped upper horizontal tube to reduce hosebed height from ground over tank area. | $2,258 |
| 3110-0132 | Bolt-on diamond plate tailboard (full width of rear compartment). Additional 10" of tailboard to run full width of body ("T" shaped tailboard). Includes the enhanced extended side compartment frame work and handrails - (1) vertical on trailing edge of body opposite side of ladder and handrail(s) horizontal below hosebed. | $2,335 |
| 3110-0133 | Rear end tanker. Includes smooth plate upper and lower panels a smooth plate center strip for a Jet or Newton Dump application and upper area access door for thru the tank storage. | $733 |
| 3110-0136 | Full Height Rear Compartment with Upper Ladder Storage Compartment. Includes smooth plate panels. Includes area for storage of (1) 24' (1) 14' (1) 10' Attic (4) pike poles and a lift-up storage access door with push buton latches (wire to door ajar). Lift-up door to use plunger style hold open device. Includes "NO STEP" tags located on outboard ends and positioned to be read from the open position of the door. | $2,120 |
| 3110-0144 | Bolt-on diamond plate tailboard (full width of rear compartment). Additional 10" of tailboard to run full width of body ("T" shaped tailboard). Includes the enhanced extended side compartment frame work and handrails - (1) vertical on trailing edge of body opposite side of ladder and handrail(s) horizontal below hosebed on trailing edge of the intermediate step. | $2,335 |
| 3110-0145 | Full Height Rear Compartment with smooth plate panels. | $1,311 |
| 3110-0146 | Rear end with full height compartment. Includes diamond plate panels and double upper extrusions below hosebed area. Interior of compartment to be transverse side to side. | $1,520 |
| 3110-0147 | Bolt-on diamond plate 16" tailboard (full width of body). Includes (2) slanted beavertails with raised stanchions post with E-ONE logo style mounts and removable outer panels handrails- (2) vertically on trailing edge of body/beavertail and horizontally mounted handrail below hosebed on trailing edge of intermediate step. | $782 |
| 3110-0148 | Bolt-on tailboard compartments located to the driver and officer side of B1. The bolt-on tailboard compartments to be 64" high with embossed diamond plate compartment tops. The compartments includes hinged smooth plate door with 1/4 turn latch(es). The each compartment to have 4" gap at top of the door. Each door to be wired into door ajar indicator. | $2,994 |
| 3110-0149 | Full Height Rear Compartment with Upper Ladder Storage Compartment. Includes smooth plate panels. Includes area for storage of (1) 24' (1) 14' (1) 10' Attic (2) pike poles and a drop down storage access door with Tri-Mark latch (wire to door ajar). | $2,198 |

| Item No. | Description | |
|---|---|---|
| 3110-0150 | Upper Storage Compartment to hold (1) 17' Little Giant ladder. Little giant ladder to be located on driver side of storage tunnel stop bracket included approximately 58" back from opening. | $598 |
| 3110-0151 | Bolt-on diamond plate tailboard (full width of rear compartment). Additional 5.5" of tailboard to run full width of body ("T" shaped tailboard). Includes the enhanced extended side compartment frame work with diamond plate compartment tops (1) officer side lower area folding step. Driver side includes (1) upper hosebed mounted handrail (as applicable) and handrails- (2) vertically on trailing edge of body and horizontally mounted handrail(s) below hosebed. | $2,335 |
| 3110-0152 | Upper Storage Compartment divider to be located offset 26" from officer side. Officer side of divider to be enclosed to 86" deep and driver side of divider to be enclosed to 72" deep. | $598 |
| 3110-0153 | Rear access into the enhanced extended portion of the L2 and R2 compartments. Includes smooth plate access doors with (2) push button latches each (wired to door ajar). | $765 |
| 3110-0156 | Upper Storage Compartment to hold (1) 17' Little Giant ladder (1) 24' 2-section ladder (1) 14' roof ladder (1) 10' attic ladder and (2) pike poles. | $598 |
| 3110-0157 | Rear end with Upper Storage Compartment. Includes smooth plate panels. Includes area for misc. storage and vertical hinged double doors with D-ring latch (wire to door ajar). | $2,120 |
| 3110-0158 | Bolt-on diamond plate 16" tailboard (full width of body). Includes handrails- (2) vertical on trailing edge of body and horizontal mounted handrail(s) below hosebed. | $1,207 |
| 3110-0161 | Bolt-on diamond plate 25" tailboard (full width of body). Includes (2) squared off beavertails (no stanchions) with removable outer panels and (2) 48" handrails vertical on beavertails and (1) 36" horizontal below hosebed. | $1,196 |
| 3110-0162 | Full Height Rear Compartment with Officer Side Storage Tunnel. Includes smooth plate panels and storage access door with push button latch. B1 compartment opening to be 35" wide due to officer side tailboard compartment. | $1,322 |
| 3110-0163 | Enhanced extended rear end with tall rear compartment and with officer side storage tunnel. Driver side enhanced extended to be be Pumper style and officer to be Recue Pumper style.Officer side hosebed extrusion to be stepped for storage tunnel. Included are diamond plate tailboard full width of the rear compartment smooth plate panels and storage access door (wired to door ajar) with push button latch. | $2,492 |
| 3110-0164 | Bolt-on diamond plate 24" tailboard (full width of body). Includes (2) squared off 12" deep beavertails (no stanchions) with removable outer panels and handrails- (2) vertical on trailing edge of body and horizontal mounted handrail(s) below hosebed. The outer beavertail panels to be aluminum smooth plate to allow for chevron striping. For use with swivel style rear tank dump only. | $1,332 |
| 3110-0165 | Full Height Rear Compartment with Driver Side Storage Tunnel. Includes smooth plate panels and storage access door with push button latch. The rear compartment to be 36" due to the enhanced extended compartment and double door options. | $1,487 |
| 3110-0167 | Full Height Rear Compartment with Upper Storage Compartment and Officer Side Ladder Tunnel. Includes smooth plate panels and storage access doors with Tri-Mark model 030-1300 door latches. The upper tunnel access door to be horizontally hinged lift-up with gas shock. The upper tunnel to have on the officer side a stop at 128" and on the driver side a stop at 72" from rear of truck. | $2,682 |
| 3110-0168 | Bolt-on diamond plate tailboard (full width of rear compartment). Additional 5" of tailboard to run full width of body ("T" shaped tailboard). Includes the enhanced extended side compartment frame work (1) officer side lower area folding step and handrails- (2) vertically on trailing edge of body and horizontally mounted handrail(s) below hosebed. | $1,705 |
| 3110-0170 | Lower Rear Compartment with Officer Side Storage Tunnel. Includes smooth plate panels and storage access door with push button latch. | $1,275 |
| 3110-0172 | Bolt-on diamond plate 14" tailboard full width of body with Bustin Tread provides flat back body design. Includes rear of body hand rails. | $1,105 |
| 3110-0173 | Rear body smooth ladder door be painted job color finish to match body color. | $397 |
| 3110-0175 | Lower Rear Compartment only. Upper section to be smooth plate panel. Includes smooth plate panels. Upper section to be set back 8" with diamond plate step with gator grip. | $2,510 |
| 3110-0176 | Full Height Rear Compartment. Includes smooth plate panels. B1 to be as tall as possible (remove traffic advisor platework). | $1,217 |
| 3110-0177 | Bolt-on diamond plate 12" tailboard (full width of body). Includes (2) squared off beavertails (no stanchions) with removable outer panels and (2) vertical mounted handrails on trailing edge of body. | $782 |
| 3110-0178 | Full height rear compartment. Includes smooth plate panels. Bolt-on diamond plate tailboard (full width of rear compartment). Includes the driver side rescue style enhanced extended side compartment frame work with diamond plate compartment tops officer side pumper style enhanced extended side compartment frame work with diamond plate compartment top. Officer side lower rear compartment will be transverse with B1. Handrail included and located: (1) driver upper hosebed mounted handrail (as applicable) and handrails- (2) vertically on trailing edge of body and horizontally mounted handrail(s) below hosebed. | $2,876 |

| Item No. | Description | |
|---|---|---|
| 3110-0179 | Upper Storage Compartment to hold (1) 24' 2-section ladder (1) 14' roof ladder (1) 12' pike pole (1) 8' pike pole (2) 6' pike poles and (2) 6' D-handle trash hooks. Area rearward of pike poles to be closed off just before fill towers. | $765 |
| 3110-0180 | Bolt-on diamond plate 14" tailboard (full width of body). For use with rear ladder application. Includes handrails- (1) mounted vertical on trailing edge of body opposite side of ladder and handrail(s) horizontal below hosebed. | $1,075 |
| 3110-0181 | Rear flip down tailboard. Includes indicator in cab when the tailboard is in the down position. Includes handrails- (2) vertically on trailing edge of body and horizontally mounted handrail(s) below hosebed. | $3,769 |
| 3110-0182 | Full Height Rear Compartment with Upper Storage Compartment. Includes diamond plate panels. Includes area for misc. storage and a drop down storage access door with a D-ring latch (wire to door ajar). | $2,120 |
| 3110-0183 | Full height rear compartment with upper ladder storage compartment. Includes smooth plate panels. Includes area for storage of (1) 24'(1)14'(1)10' attic (2) pike poles and a drop down storage access door with push button latches (wire to door ajar).note door to open up past 90 degrees. | $2,120 |
| 3110-0185 | Upper and Lower Rear Compartment. Includes smooth plate panels. Upper compartment to be as tall as possible (remove traffic advisor platework). | $1,883 |
| 3110-0186 | Full Height Rear Compartment with Officer Side Storage Tunnel. Includes smooth plate panels and storage access door with push button latch. Area just below hosebed for discharge pipe routing above the rear compartment. Includes stepped upper horizontal tube to reduce hosebed height from ground over tank area. | $2,507 |
| 3110-0188 | Bolt-on diamond plate 10" tailboard (full width of body). For use with rear ladder application. Includes a handrail vertically mounted on trailing edge of body opposite side of ladder. | $935 |
| 3110-0189 | Full Height Rear Compartment with Officer Side Storage Tunnel. Includes smooth plate panels and storage access door with push button latch (remove traffic advisor platework). | $1,156 |
| 3110-0190 | Lower rear stainless steel short compartment B1 46" x 35" high x 26" deep. Includes intermediate step above. Side walls removed to allow a Little Giant ladder to be slid in from compartment R3. Provide a stainless steel bolt-on panel to conceal and protect ladder when stored. | $1,330 |
| 3110-0191 | Bolt-on diamond plate 14" tailboard between rear side compartments with Bustin Tread. Includes hand rails (2) vertically on trailing edge of body and horizontally mounted hand rail below hose bed. | $1,105 |
| 3110-0193 | Full Height Rear Compartment with Driver Side Storage Tunnel. Includes smooth plate panels and storage access door with push button latch. | $1,593 |
| 3110-0194 | Full Height Rear Compartment with smooth plate panels. The B1 compartment to be 40" wide full depth (no compartment break) and as tall as possible (remove traffic advisor platework). | $1,593 |
| 3110-0195 | Full Height Rear Compartment. Includes smooth plate panels. The rear compartment to be 36" due to the enhanced extended compartment and double door options. | $1,148 |
| 3110-0198 | B1 floor to be recessed as applicable to allow for booster reel and/or dealer installed equipment to be located below newton dump/applicable dump without interference. | $507 |
| 3110-0199 | Compartment B1 24" wide x 10" high x 26" deep located between full length chassis frame rails. The compartment shall include a bottom hinged drop-down access door using a D-ring latch (wire to door ajar). | $973 |
| 3110-0200 | Full Height Rear Compartment with Driver and Officer Side Storage Tunnels. Includes smooth plate panels and storage access doors with d-ring latches. | $1,303 |
| 3110-0201 | Bolt-on diamond plate tailboard (full width of rear compartment). Additional 10" of tailboard to run full width of body ("T" shaped tailboard). Includes the enhanced extended side compartment frame work and (1) handrail vertical on trailing edge of driver's side of body and horizontal mounted handrail (driver's side) below hosebed. | $2,335 |
| 3110-0202 | Upper and Lower Rear Compartment. Includes upper and lower sanded smooth plate panels. Upper rear compartment door to be offset to driver side constructed of smooth plate. Upper rear compartment to be 56" wide for little giant ladder storage. (2) 1.5" x 4" extrusions to be stacked between upper and lower compartments for directional light mounted under intermediate rear step. | $2,299 |
| 3110-0203 | Bolt-on diamond plate tailboard (full width of rear compartment). Includes the enhanced extended side compartment frame work with diamond plate compartment tops raised 12" to cover rear piping (1) officer side lower area folding step. Driver side includes (1) upper hosebed mounted handrail (as applicable) and handrails- (2) vertically on trailing edge of body and horizontally mounted handrail(s) below hosebed. | $1,196 |
| 3110-0204 | Lower rear stainless steel tall compartment B1 46" wide x 50" high x 26" deep. Includes bolt-on intermediate step above. Entire rear panel to be smooth aluminum plate for Chevron graphics. | $1,325 |
| 3110-0206 | Full Height Rear (no compartment). Includes opening for access to rear mount pump panel and smooth plate panels. Includes openings for preconncts to driver's side of rear pump panel | $1,476 |

| Item No. | Description | |
|---|---|---|
| 3110-0207 | Lower rear stainless steel short compartment B1 46" wide x 35" high x 26" deep without an intermediate rear step. Entire rear panel to be smooth aluminum plate for Chevron graphics. | $859 |
| 3110-0208 | Bolt-on diamond plate 10" tailboard (full width of body). For use with a folding step application. Includes handrails- (2) vertical on trailing edge of body and handrail(s) horizontal below hosebed. | $718 |
| 3110-0209 | Upper and Lower Rear Compartment. Includes smooth plate panels. B1 to be 36" wide due to enhanced extended feature and hinged door(s) as required. | $2,483 |
| 3110-0210 | Bolt-on diamond plate 10" tailboard (full width of body). For use with folding step application. Includes handrails- (1) vertical on trailing edge each side of body and handrail(s) horizontal below hose bed. | $935 |
| 3110-0211 | Bolt-on diamond plate tailboard (full width of rear compartment). Includes the enhanced extended side compartment frame work with diamond plate compartment tops (2) recessed folding steps in lower area (1) officer side (1) driver side. Driver side includes (1) upper hosebed mounted handrail (as applicable) and handrails- (2) vertically on trailing edge of body and horizontally mounted handrail(s) below hosebed. | $1,120 |
| 3110-0212 | Bolt-on diamond plate tailboard (full width of hosebed). Additional 10" of tailboard to run full width of body ("T" shaped tailboard). Includes the extended side compartment frame work and handrails- (2) vertical mounted on trailing edge of body and horizontal mounted handrail(s) below hosebed. | $2,335 |
| 3110-0213 | Bolt-on diamond plate 20" tailboard with Bustin Tread (full width of body). Includes (2) slanted beavertails and hand rails (2) vertically on trailing edge of body and horizontally mounted hand rail below hose bed. Lower rear stainless steel short compartment B1 46" wide x 35" high x 26" deep without an intermediate rear step. Entire rear panel to be smooth stainless steel for Chevron graphics. | $2,133 |
| 3110-0215 | Upper Storage Compartment to hold (1) 10' attic ladder (4) pike poles and (2) 6" x 10' hard suction hoses. Includes stop bracket included approximately 130" back from opening. An enclosed frontal area shall be included as part of the tunnel design. | $598 |
| 3110-0216 | Bolt-on diamond plate 12" tailboard (full width of body). Includes (2) squared off beavertails with stanchions and removable outer panels and handrails- (2) vertical on trailing edge of body and horizontal mounted handrail(s) below hosebed. | $782 |
| 3110-0220 | Bolt-on 10" tailboard (full width of body) aluminum smooth plate with black Scorpion coating (IPOS diamond plate). For use with rear ladder application. Includes handrails- (1) vertically on trailing edge of body opposite side of ladder and handrail(s) horizontally below hosebed. | $1,227 |
| 3110-0221 | Full height rear compartment with upper storage compartment. Includes smooth plate panels. Includes area for misc. storage and a lift up storage access door with push button latches (wire to door ajar). | $2,282 |
| 3110-0222 | Bolt-on 10" diamond plate tailboard (full width of rear compartment). Includes the enhanced extended side compartment frame work. For use with rear ladder application. Includes handrails (1) vertical mounted on trailing edge of body opposite side of ladder and (1) horizontal mounted handrail(s) below hosebed. | $2,045 |
| 3110-0223 | Full Height Rear Compartment with Officer Side Storage Tunnel. Includes smooth plate panels and storage access door with d-ring latch. | $1,156 |
| 3110-0224 | Rear body panels to be upgraded from smooth aluminum plate to un-painted smooth FRP. | $277 |
| 3110-0225 | Full Height Rear Compartment with Upper Ladder Storage Compartment. Includes smooth plate panels. Includes area for storage of (1) 24' (1) 14' (1) 10' Attic (2) pike poles and a lift up storage access door with push button latches (wire to door ajar). The door shall be held in place with a plunger style hold open device. | $2,120 |
| 3110-0226 | Bolt-on diamond plate 22" tailboard between rear side compartments with Bustin Tread. Includes hand rails (2) vertically on trailing edge of body and horizontally mounted hand rail below hose bed. | $1,105 |
| 3110-0227 | Upper and lower rear compartment. Includes smooth plate panels. For use with raised lower rear body (B1 is 25" high). | $1,769 |
| 3110-0228 | Bolt-on diamond plate 12" tailboard (full width of body). Includes (2) squared off beavertails (no stanchions) with removable outer panels and handrails- (2) vertical trailing edge of body and horizontal mounted handrail(s) below hosebed. Beavertails and outer panels to be smooth plate painted job color. Tailboard to diamond plate painted black durabak. | $1,931 |
| 3110-0229 | Lower rear stainless steel tall compartment B1 46" wide x approx. 64" high x 26" deep but door opening remains in the normal 45" high position. Includes bolt-on intermediate step above the door opening. Entire rear panel to be smooth plate for Chevron graphics. | $1,376 |
| 3110-0230 | Bolt-on 10" tailboard (full width of body) aluminum smooth plate with black Scorpion coating (rough finish) IPOS diamond plate. For use with rear ladder application. Includes handrails- (1) vertically on trailing edge of body opposite side of ladder and handrail(s) horizontally below hosebed. | $1,227 |

| Item No. | Description | |
|---|---|---|
| 3110-0232 | Bolt-on diamond plate 22 inch tailboard tailboard (full width of body). Includes (2) squared off beavertails (no stanchions) with removable outer panels and handrails- (2) vertical on trailing edge of body and horizontal mounted handrail(s) below hosebed. | $1,224 |
| 3110-0233 | Bolt-on tailboard compartments located to the driver and officer side of B-1. The bolt-on tailboard compartments to be full height just below hosebed. Doors to be (1) Piece full height as applicable and hinged to the outside with push-button latches. Install shelf tracking in each compartment full height | $3,544 |
| 3110-0234 | Upper Storage Compartment to hold (1) stokes basket in place of standard ladder components. Stokes basket to be located on officer side of storage tunnel. Stop bracket full width across tunnel shall be included. | $170 |
| 3110-0235 | Step full width rear intermediate. Intermediate rear step to be located just below the upper ladder storage compartment. | $809 |
| 3110-0236 | Step full width rear intermediate. Intermediate rear step to be located just above the upper ladder storage compartment. | $809 |
| 3110-0237 | Full height rear compartment with upper storage compartment. Includes smooth plate panels. Includes an area for misc. storage and a lift up storage access door with a D-ring latch (wire to door ajar) and a plunger style hold open device. To include a storage sleeve for (2) backboards (72"X16"X2" each) offset to the officer side with a stop at 80". | $2,440 |
| 3110-0238 | Bolt-on diamond plate 18" tailboard (full width of body). Includes handrails- (2) vertically on trailing edge of body and handrail(s) horizontally below hosebed. | $1,782 |
| 3110-0239 | Bolt-on diamond plate 10" tailboard (full width of body). Includes handrail - (1) vertically on officer side trailing edge of body and horizontally mounted handrail(s) below hosebed. | $1,044 |
| 3110-0240 | Lower Rear Compartment with access door above to the ladders storage thru tank. Includes smooth plate panels and storage access door with push button latches. | $1,726 |
| 3110-0242 | Bolt-on diamond plate 25" tailboard between rear side compartments with Bustin Tread. Includes hand rails (2) vertically on trailing edge of body and horizontally mounted hand rail below hose bed. | $1,105 |
| 3110-0243 | Bolt-on diamond plate 16" tailboard (full width of body). For use with flat back style body. Includes handrails- (1) vertically on trailing edge of body opposite side of ladder and handrail(s) horizontally below hosebed. | $1,717 |
| 3110-0245 | Bolt-on diamond plate 18" tailboard (full width of body). Includes (2) squared off beavertails (no stanchions) with removable outer panels and handrails- (2) vertical on trailing edge of body and horizontal mounted handrail(s) below hosebed. Outer panels to be smooth plate painted job color. | $1,165 |
| 3110-0247 | Full Height Rear Compartment with Upper Storage Compartment and Officer Side Storage Tunnel. Includes smooth plate panels and storage access door with push button latch. Upper compartment to be approx 17" high x 38" wide x 26" deep. | $1,630 |
| 3110-0248 | Full Height Rear Compartment. Includes smooth plate panels angled rear body with flip down tailboard and handrails- (2) vertical on trailing edge of body and horizontal mounted handrail(s) below hosebed. | $3,308 |
| 3110-0249 | Bolt-on diamond plate 10" tailboard (full width of body). Includes handrails- (2) vertically on trailing edge of body. Must be used with hosebed dividers that include hand hold cut outs (the horizontally mounted handrail(s) are not included). | $1,044 |
| 3110-0250 | Top of body stepping surface plate work (compartment tops and enhanced extended compartment top at rear of body) shall be smooth plate painted black Durabak. | $734 |
| 3110-0251 | Full Height Rear Compartment with Officer Side Storage Tunnel. Includes flush smooth plate rear facing body panels and storage access door with push button latch. | $1,324 |
| 3110-0252 | Enhanced extended exterior inside facing walls at either side of B1 compartment opening shall be smooth plate painted black durabak. | $604 |
| 3110-0253 | Full Height Rear Compartment with smooth plate panels. Compartment material to be 5083-H321. | $1,340 |
| 3110-0254 | Single low rear compartment. For use with low hosebed. Includes smooth plate panels. | $1,148 |
| 3110-0255 | Full Height Rear Compartment 44" wide. Includes smooth plate panels. | $1,243 |
| 3110-0256 | Bolt-on diamond plate 14" tailboard (full width of body). For use with dual rear ladder application. Includes handrail horizontally mounted below hosebed. | $1,075 |
| 3110-0257 | Rear Panel Compartment. Compartment B1 located centered ahead of the rear tailboard shall be 46" wide x approximately 50" high x 26" deep. Solid walls shall be provided on both sides of the rear compartment. This compartment shall be of 12 gauge 304L stainless steel. | $1,274 |
| 3110-0258 | Rear Panel Area. The entire rear panel of the body shall be covered using smooth FRP panels for application of the Chevron graphics. The rear panel area shall be of the flat back body design. | $1,875 |
| 3110-0259 | Bolt-on diamond plate 14" tailboard (full width of body). Includes handrails- (2) vertical on trailing edge of body and horizontal mounted handrail(s) below hosebed. | $1,183 |

| Item No. | Description | |
|---|---|---|
| 3110-0262 | Full Height Rear Compartment with Upper Storage Compartment and Officer Side Storage Tunnel. Upper Storage Compartment to be fully enclosed drop in / bolt in box with top. Compartment to be full height X full width of opening and 86" deep with a vertical partition located 26" from officer side. Driver side of partition to have a stop located 75" from box opening. Includes smooth plate panels and storage access doors with push button latches. | $5,006 |
| 3110-0263 | Lower Rear Compartment with Officer Side Storage Tunnel. Includes smooth plate panels and storage access door with push button latch. Includes bolt-on panel between recessed traffic advisor and lower compartment for rear tank fill. | $1,446 |
| 3110-0264 | Lower rear stainless steel tall compartment B1 46" wide x 60" high x 26" deep. Entire rear panel to be smooth FRP plate for Chevron graphics. | $1,267 |
| 3110-0265 | Bolt-on diamond plate 16" tailboard full width of body with Bustin Tread. This provides a flat back body design. Includes hand rails (2) vertically on trailing edge of body and horizontally mounted hand rail below hose bed. | $1,140 |
| 3110-0266 | Rear end tanker. Includes smooth plate upper and lower panels a smooth plate center strip for a Jet or Newton Dump application driver and officer side access doors for storage tunnels. | $812 |
| 3110-0267 | Upper and Lower Rear Compartment. Includes smooth plate panels. Upper compartment to be as tall as possible (remove traffic advisor platework). | $2,513 |
| 3110-0269 | Lower rear stainless steel short and narrow compartment B1 26" wide x 35" high x 26" deep for use with special lower rear panel plumbing options. Includes 46" wide intermediate rear step above. Entire rear panel to be smooth aluminum plate for Chevron graphics. | $1,084 |
| 3110-0273 | Full Height Rear Compartment with 4" high permanent diamond plate shelf for a Upper and Lower Rear Compartment design. Includes smooth plate panels. Upper compartment to be as tall as possible (remove traffic advisor platework). | $2,513 |
| 3110-0274 | Bolt-on diamond plate 24" tailboard (full width of body). Includes (2) squared off 10" deep beavertails (no stanchions) with removable outer panels and handrails- (2) vertical on trailing edge of body and horizontal mounted handrail(s) below hosebed. For use with swivel style rear tank dump only. | $1,144 |
| 3110-0275 | Lower rear stainless steel tall compartment B1 46" wide x approx. 64" high x 34" deep door opening 53" high position. Includes bolt-on intermediate step above the door opening. Entire rear panel to be smooth plate for Chevron graphics. | $1,620 |
| 3110-0276 | Lower Rear Compartment with access above to the ladders storage thru tank. Includes smooth plate panels and stepped upper horizontal tube to reduce hosebed height from ground over tank area. | $1,993 |
| 3110-0277 | Lower rear stainless steel short compartment B1 46" wide x 40.25" high x 26" deep. Includes bolt-on intermediate step above. Entire rear panel to be smooth aluminum plate for Chevron graphics. | $1,075 |
| 3110-0278 | Upper rear body panel below hose bed and above lower compartments to be brushed stainless steel (no chevron). Panel to be full width and includes the area behind the rear discharge pipes. | $191 |
| 3110-0279 | Bolt-on diamond plate 20" tailboard (full width of body). Includes (2) slanted beavertails with lowered height approx 5.5" from standard to inhibit interferance as stowed with beacon lights as optioned (no stanchions) with removable outer panels and handrails- (2) vertical on trailing edge of body and horizontal mounted handrail(s) below hosebed. | $1,265 |
| 3110-0280 | Bolt-on diamond plate 20" full width tailboard between rear side compartments with Bustin Tread. Includes hand rails (2) vertically on trailing edge of body and horizontally mounted hand rail below hose bed. Trailing edge of side compartments include 2" deep aluminum treadplate bumperettes to align tailboard to back of body. | $1,147 |
| 3110-0281 | Full Height Rear Compartment with Upper Storage Compartment and Side Storage Tunnel. Includes smooth plate panels and storage access doors with "D"-ring latches. | $2,204 |
| 3110-0282 | Single low rear compartment. For use with low hosebed. Includes smooth plate panels. B1 compartment 28" deep. | $991 |
| 3110-0283 | Full Height Rear Compartment with Upper Ladder Storage Compartment. Includes smooth plate panels. Includes area for storage of (1) 24' (1) 14' (1) 10' Attic (2) pike poles and a drop down storage access door with D-Ring latch (wire to door ajar). | $2,196 |
| 3110-0284 | Bolt-on diamond plate 18" tailboard (full width of body). Includes (2) slanted beavertails (no stanchions) with removable outer panels and handrails- (2) vertically on trailing edge of body. | $1,027 |
| 3110-0285 | The rearend area of the extra wide roof top compartment above the Zico access ladder to be recessed in 16". The stepping area to be embossed diamond plate and side and forward plates to be diamond plate. | $764 |
| 3110-0286 | Full Height Rear Compartment with Upper Storage Compartment and Officer Side Storage Tunnel. Includes smooth plate panels and storage access doors with "D"-ring latches. Divider to be full length and be positioned 27" off of driver side compartment wall or as applicable close to fill tower on water tank. Area to the left of the divider to have a stop and be 84" deep. Area to the right of the divider to have a stop and be 75" deep. | $2,237 |

| Item No. | Description | |
|---|---|---|
| 3110-0289 | Pumper rear mount rear end with lower pump panel provisions and upper pump maintenance access door with driver side ladder tunnel. Includes smooth plate panels and storage access doors with D-ring latches. | $1,214 |
| 3110-0290 | Bolt-on diamond plate 12" tailboard (full width of body). For use with rear ladder application. Includes handrails- (1) vertical on trailing edge of body opposite side of ladder and handrail(s) horizontal below hosebed. | $1,014 |
| 3110-0292 | Rear Panel Compartment. Compartment B1 located centered ahead of the rear tailboard shall be 46" wide x approximately 50" high x 32" deep. Solid walls shall be provided on both sides of the rear compartment. This compartment shall be of 12 gauge 304L stainless steel. | $1,274 |
| 3110-0293 | Bolt-on diamond plate 12" tailboard full width of body with Bustin Tread. This provides a flat back body design. Includes hand rails (2) vertically on trailing edge of body and NO horizontally mounted hand rail below hose bed. | $1,003 |
| 3110-0294 | Lower rear stainless steel short compartment B1 46" wide x 35" high x 26" deep without an intermediate rear step for hinged doors. Entire rear panel to be smooth aluminum plate for Chevron graphics. | $859 |
| 3110-0295 | HS pumper / rescue pumper rear body with officer side storage tunnel. Includes center radiator mesh smooth plate panels and storage access door with push button latch. | $1,694 |
| 3110-0296 | Lower Rear Compartment only. Upper section to be smooth plate panel. Includes smooth plate panels. | $1,075 |
| 3110-0297 | HS pumper / rescue pumper rear body. Includes center radiator mesh and smooth plate panels. | $1,528 |
| 3110-0298 | Full Height Rear Compartment with Upper Ladder Storage Compartment. Includes smooth plate panels. Includes area for storage of (1) 28' (1) 14' (1) 10' Attic (1) Dry wall hook (2) pike poles and a drop down storage access door with push buton latches (wire to door ajar). | $2,120 |
| 3110-0299 | 1" X 1.5" extrusion added to lower B1 compartment door opening to form a 10" wide notch offset to officer side for 5" LDH hose connected to customer supplied and installed valve stored in B1. This will also require floor mounted rollout tray to be raised to clear lower door opening. | $360 |
| 3110-0300 | Full Height Rear Pump Panel Compartment with officer side ladder tunnel storage with smooth plate door secured with D-Ring style latch. Includes smooth plate panels angled rear body with flip down tailboard and handrails as applicable. Pump Panels to be recessed in the rear body and enclosed on all sides. | $5,285 |
| 3110-0301 | Bolt-on diamond plate 10" tailboard (full width of body) with center integral slide-out step. Includes handrails- (1) vertical on trailing edge of body opposite side of ladder and handrail(s) horizontal below hosebed. | $2,043 |
| 3110-0302 | Full Height Rear Compartment with Upper Ladder Storage Compartment. Includes smooth plate panels. Includes area for storage of (1) 24' (1) 14' (1) 10' Attic (2) NY Roof Hook style pike poles and a drop down storage access door with push buton latches (wire to door ajar). | $2,120 |
| 3110-0303 | Full Height Rear Compartment with Driver and Officer Side Storage Tunnels. Includes smooth plate panels and storage access doors with push button latches tied to door ajar. Rear compartment to be dual purpose and equipped with a 22" wide door opening on the driver side and a rear body panel added in the remaining space for a rear slam strip to accommodate a jet dump and a direct tank fill in the lower officer side area of the rear compartment. Upper area above slam strip to include a vertical hinged access door of smooth plate aluminum matching rear of body selected finish with stainless steel hinge push button latch and rubber impact bumper to cushion door on handrail in open position. | $2,695 |
| 3110-0304 | Full Height Rear Pump Panel Compartment. Includes smooth plate panels angled rear body with flip down tailboard and handrails as applicable. Pump Panels to be recessed in the rear body and enclosed on all sides. | $5,087 |
| 3110-0305 | Lower rear stainless steel tall compartment B1 46" wide x 45" high x 26" deep without intermediate step above. Entire rear panel to be smooth aluminum plate for Chevron graphics. | $1,027 |
| 3110-0306 | Lower Rear Compartment with Officer Side Storage Tunnel. Includes smooth plate panels and storage access door with "D"-ring. | $1,275 |
| 3110-0308 | Upper rear stainless steel short compartment B2 39" wide x 12" high x 26" deep. Entire rear panel to be smooth FRP plate for Chevron graphics. | $868 |
| 3110-0309 | Bolt-on 3/16" (.1875") smooth plate painted black Durabak 10" tailboard (full width of body). For use with rear ladder application. Includes handrails- (1) vertical on trailing edge of body opposite side of ladder and handrail(s) horizontal below hosebed. | $1,168 |
| 3110-0310 | Full height rear compartment with upper ladder storage compartment. Includes smooth plate panels. Includes area for storage of (1) 24'(1)14'(1)10' attic (3) pike poles including (1) one each 6' 8' and 10' with APH style hooks a lift up storage access door with hold open springs and push button latches (wire to door ajar) note door to open up 90 degrees. There shall be label 'DO NOT STEP' to be applied "upside down" as viewed from the ground at the bottom of the lift-up door. | $2,325 |
| 3110-0311 | Bolt-on diamond plate tailboard (full width of rear compartment). 20" tailboard to run full width of body ("T" shaped tailboard). Includes the extended side compartment frame work and handrails- (2) vertical on trailing edge of body and horizontal mounted handrail(s) below hosebed. | $1,782 |

| Item No. | Description | |
|---|---|---|
| 3110-0312 | Bolt-on diamond plate 18" tailboard (full width of body). Includes (2) slanted beavertails (no stanchions) with removable outer smooth plate panels painted job color and handrails- (2) vertically on trailing edge of body and horizontally mounted handrail(s) below hosebed. | $1,950 |
| 3110-0313 | Full Height Rear Compartment with Driver Side Storage Tunnel. Includes smooth plate panels and storage access door with D-ring latch. | $1,197 |
| 3110-0314 | Rear flip down tailboard to be painted Durabak black. Includes indicator in cab when the tailboard is in the down position. Includes handrails- (2) vertically on trailing edge of body and horizontally mounted handrail(s) below hosebed. | $4,711 |
| 3110-0315 | Upper rear compartment depth to be approximately 40" deep. | $279 |
| 3110-0316 | Lower Rear Compartment only 46" wide opening. Upper section to be smooth plate panel. Includes smooth plate panels. | $1,240 |
| 3110-0317 | Rear flip down tailboard. Includes indicator in cab when the tailboard is in the down position. Includes handrails- (1) vertical on trailing edge of body opposite side of ladder and handrail(s) horizontal below hosebed. | $3,769 |
| 3110-0318 | Upper and lower rear compartment. Includes smooth plate panels. For use with raised lower rear body (B1 is 29" high). | $1,769 |
| 3110-0320 | Full Height Rear Compartment with Officer Side Storage Tunnel. Rear tank fill to terminate above rear compartment thru a bolt-on access panel. Includes smooth plate panels and storage access door with push button latch. | $1,528 |
| 3110-0324 | Full Height Rear Compartment with Driver Side Storage Tunnel. Includes smooth plate panels and storage access door with "D"-ring latch. | $1,156 |
| 3110-0325 | Bolt-on diamond plate tailboard (full width of rear compartment). Includes the rear beavertail compartments and handrails- (2) vertical on trailing edge of body and horizontal mounted handrail(s) below hosebed. | $2,335 |
| 3110-0326 | Bolt-on diamond plate tailboard (full width of rear compartment). Additional 10" of tailboard to run full width of body ("T" shaped tailboard). Includes the enhanced extended side compartment frame work and handrails- (2) vertical on trailing edge of body. Does not include the horizontal handrail. | $2,335 |
| 3110-0327 | Rear body panels to be upgraded from smooth aluminum plate to aluminum treadplate. This includes the doors for ladder and storage tunnels (if applicable). For use with dealer/customer installed rear panel chevron. | $678 |
| 3110-0328 | Bolt-on diamond plate 16" tailboard with Bustin Tread (full width of body). Includes (2) slanted beavertails and hand rails (2) vertically on trailing edge of body and horizontally mounted hand rail below hose bed. | $915 |
| 3110-0329 | Full Height Rear Compartment with Upper Ladder Storage Compartment. Includes smooth plate panels. Includes area for storage of (1) 24 '/ 2section (1) 16' roof (1) 10' Attic (3) pike poles with a drop down storage access door with push button latches (wire to door ajar). | $2,165 |
| 3110-0330 | Single low rear compartment. B1 compartment to be 30" deep and non transverse. For use with low hosebed. Includes smooth plate panels. | $991 |
| 3110-0331 | Lower rear stainless steel short compartment B1 between full length chassis frame rails with drop-down door 26.5" wide x 14.5" high x 26" deep. Includes bolt-on intermediate step above. Entire rear panel to be smooth aluminum plate for Chevron graphics. | $877 |
| 3110-0332 | Bolt-on diamond plate 10" tailboard (full width of body). Includes (2) squared off beavertails (no stanchions) with removable outer panels and handrails- (2) vertical on trailing edge of body and horizontal mounted handrail(s) below hosebed. | $1,762 |
| 3110-0333 | Enclosed Rear Pump Panel on Rear Mount. Includes 40" wide pump panel opening. Upper module area to have embossed diamond plate top. | $1,735 |
| 3110-0334 | Bolt-on diamond plate 14" tailboard (full width of body). For use with rear ladder application. Includes handrails- (1) mounted vertical on trailing edge of body opposite side of ladder and handrail(s) horizontal below hosebed. Gator grip to be on each end outboard of the rear pump panel enclosure. | $1,075 |
| 3110-0335 | Rear Compartment between frame rails. Includes bottom hinged drop-down access door using a D-ring latch (wire to door ajar). | $973 |
| 3110-0336 | The rearend area of the extra wide roof top compartment above the Zico access ladder to be recessed in 16". The stepping surface to be embossed diamond plate side plates to be diamond plate and forward plate to be sanded smooth plate. | $764 |
| 3110-0337 | Full Height Rear Compartment with Officer Side Combination Storage Tunnel. Includes smooth plate panels and storage access doors with d-ring latches. | $2,639 |
| 3110-0338 | Full Height Rear Compartment with Upper Ladder Storage Compartment. Includes smooth plate panels. Includes area for storage of (1) 24' (1) 14' (1) 10' Attic (3) pike poles and a drop down storage access door with push button latches (wire to door ajar). | $2,286 |
| 3110-0339 | Bolt-on diamond plate 14" tailboard (full width of body). For use without a rear ladder application. Includes handrails- (2) mounted vertical on trailing edge of body and handrail(s) horizontal below hosebed. | $1,075 |

| Item No. | Description | |
|---|---|---|
| 3110-0342 | Lower rear stainless steel compartment B1 24" wide x 20" high x 26" deep located between full length chassis frame rails. For use with special lower rear panel plumbing options with a low hose bed design. Entire rear panel to be smooth aluminum plate for Chevron graphics. No intermediate step above. | $866 |
| 3110-0344 | Rear body panels to be upgraded from smooth aluminum plate to painted smooth FRP. | $277 |
| 3110-0345 | Full Height Rear Compartment with Officer Side Storage Tunnel. Includes smooth plate panels and storage access door with push button latch. The B1 compartment to be 40" wide full depth (no compartment break) and as tall as possible. | $1,156 |
| 3110-0346 | The rearend area of the extra wide roof top compartment above the Zico access ladder to be recessed in 16in. The stepping area to be embossed diamond plate and side and forward plates to be smooth plate painted job color. | $920 |
| 3110-0348 | Bolt-on diamond plate 22" tailboard with Bustin Tread (full width of body). Includes (2) squared off beavertails with hand rails (2) vertically on trailing edge of body and horizontally mounted hand rail below hose bed. | $1,073 |
| 3110-0352 | Bolt-on diamond plate tailboard (full width of driver side hosebed to officer side rear compartment). Includes the enhanced extended officer side compartment frame work. Driver side includes (1) upper hosebed mounted handrail (as applicable) and handrails- (2) vertically on trailing edge of body and horizontally mounted handrail(s) below hosebed. | $867 |
| 3110-0353 | Bolt-on diamond plate 22" full width tailboard between rear side compartments with Bustin Tread. Includes hand rails (2) vertically on trailing edge of body and horizontally mounted hand rail below hose bed. Trailing edge of side compartments include 4" deep aluminum treadplate bumperettes to align tailboard to back of body. | $1,147 |
| 3110-0354 | Lower rear stainless steel short compartment B1 transverse access 46" wide x 35" high x 26" deep. Includes bolt-on intermediate step above. Entire rear panel to be smooth aluminum plate for Chevron graphics. | $1,075 |
| 3110-0355 | Angled (Boston style) style tailboard corners. 8" x 8" cutouts to be provided. | $463 |
| 3110-0356 | Bolt-on diamond plate tailboard 10 in. (full width of Body). Includes hose bed structure extended to rear of body over side enhanced compartments for a smooth back body and provide a max depth B1 compartment as optioned. With handrails- (2) vertical on trailing edge of body or (1) if a Zico ladder is equipped and horizontal mounted handrail(s) below hosebed. | $2,449 |
| 3110-0357 | Single low rear compartment. For use with low hosebed. Includes smooth plate panels. | $991 |
| 3110-0359 | LINE-X package for welded (exterior surface only) bolt on (exterior surface only) or flip down style (exterior and interior surfaces) tailboards. Includes rear bumper overlay or E-ONE fabricated boxes mounted on the tailboard as applicable. | $262 |
| 3110-0361 | Lower rear stainless steel short and narrow compartment B1 46" wide x 30" high x 28" deep for use with special lower rear panel plumbing options. Left side wall removed to allow for ALS module passage from L3. This compartment shall not have an exterior door opening. Entire rear panel to be smooth aluminum plate for Chevron graphics. | $1,084 |
| 3110-0362 | Upper rear stainless steel short/narrow compartment B2 23" wide x 10" high x 43" deep. Includes a 3-sided floor mounted 1/2" thick Poly tray open to the front (door opening). | $1,279 |
| 3110-0363 | Full Height Rear Compartment with Full Width Upper Storage Compartment. Includes officer side area for storage of (1) Ice Sled approx. 28"W X 6"H X 86"L with stops set at 88" from inside door opening and a drop down smooth plate storage access door with push buton latches (wire to door ajar). Door to be as wide as B1 compartment opening. Includes driver side area for storage of (2) 6" X 10' Hard Suction Hoses with stops set at 130" from inside door opening and a drop down smooth plate storage access door with push buton latches (wire to door ajar). Includes (1) divider located 30" off officer's side door opening. Includes smooth plate panels. | $2,520 |
| 3110-0364 | Bolt-on diamond plate 10" tailboard (full width of body) with center integral slide-out step. Includes handrails- (2) mounted vertical on trailing edge of body and horizontal mounted handrail(s) below hosebed. | $2,043 |
| 3110-0365 | Bolt-on diamond plate 12" tailboard (full width of body). For use with folding step application. Includes handrails- (1) vertical on trailing edge of body opposite each side of body and handrail(s) horizontal below hose bed. | $1,014 |
| 3110-0366 | Lower rear stainless steel short compartment B1 46" wide x 35" high x 26" deep. Includes bolt-on intermediate step above FULL WIDTH BETWEEN HANDRAILS (less 2" each side for grab rail use). Entire rear panel to be smooth aluminum plate for Chevron graphics. | $1,224 |
| 3110-0367 | Bolt-on diamond plate tail board 14 in. (full width of Body). Includes hose bed structure extended to rear of body over side enhanced compartments for a smooth back body and provide a max depth B1 compartment as optioned. With handrails- (2) vertical on trailing edge of body or (1) if a Zico ladder is equipped and horizontal mounted handrail(s) below hosebed. | $2,641 |
| 3110-0368 | Full Height Rear Compartment with Upper Ladder Storage Compartment. Includes smooth plate panels. Includes area for storage of (1) 24' (1) 14' (1) 10' Attic (4) pike poles and a drop down storage access door with push button latches (wire to door ajar). | $2,120 |

| Item No. | Description | |
|---|---|---|
| 3110-0369 | The rearend area of the extra wide roof top compartment above the Zico access ladder to be recessed in 16". The stepping area to be embossed diamond plate and side plates to be diamond plate and the forward plate to be smooth plate. | $764 |
| 3110-0370 | Rear end tanker. Includes smooth plate full width upper and side lower panels and a smooth plate center area for mounting of rear tank inlet(s) application. | $623 |
| 3110-0372 | Full Height Rear Compartment with Upper Ladder Storage Compartment. Includes smooth plate panels. Includes area for storage of (1) 24' (1) 14' (1) 10' Attic (2) pike poles and a drop down storage access door with D-ring latches (wire to door ajar). | $2,166 |
| 3110-0373 | Bolt-on diamond plate 24" tailboard with Bustin Tread (full width of body). Includes (2) slanted beavertails with removable outer panels and hand rails (2) vertically on trailing edge of body and horizontally mounted hand rail below hose bed. | $1,134 |
| 3110-0375 | Rear stainless steel extra tall compartment B1 46" wide x 60" high x 26" deep. Includes bolt-on intermediate step above. Entire rear panel to be smooth aluminum plate for Chevron graphics. | $1,243 |
| 3110-0376 | Lower rear stainless steel compartment B1 26.5" wide x 14.5" high x 26" deep located between full length chassis frame rails. Entire rear panel to be smooth aluminum plate for Chevron graphics. Does not nclude an intermediate step. Includes a smooth aluminum bottom hinged drop-down door and stainless steel bent D-ring latch. | $948 |
| 3110-0377 | Full Height Rear Compartment. Includes smooth plate panels. Includes stepped upper horizontal tube to reduce hosebed height from ground over tank area. | $2,120 |
| 3110-0378 | Center Slam Strip Rear End with diamond plate center strip for a Jet or Newton Dump application. Includes diamond plate low side panels and diamond plate upper panel(s). Requires rear NFPA striping compatible for diamond plate panels. | $2,020 |
| 3110-0379 | Upper Storage Compartment to hold (1) 10' attic ladder (1) 6' pike pole (1) 12' pike pole and (1) 8' NY pike pole and (2) 6" x 10' hard suction hoses. Includes stop bracket included approximately 130" back from opening. An enclosed frontal area shall be included as part of the tunnel design. Storage shall be enclosed with drop down door with D-Ring latch(es). | $766 |
| 3110-0380 | Lower Rear Compartment 40" high with Officer Side Storage Tunnel. Includes smooth plate panels and storage access door with D-Ring latch. | $1,275 |
| 3110-0381 | Single low rear compartment. For use with low hosebed. Includes smooth plate panels. | $991 |
| 3110-0383 | Lower rear stainless steel short compartment B1 46" wide x 35" high x 25" deep (for fuel tank clearance). Includes bolt-on intermediate step above FULL WIDTH BETWEEN HANDRAILS (less 2" each side for grab rail use). Entire rear panel to be smooth aluminum plate for Chevron graphics. | $1,224 |
| 3110-0386 | Full Height Rear Compartment with Officer Side Storage Tunnel. Includes smooth plate panels and storage access door with D-Ring. B1 compartment opening to be 34" wide due to officer side tailboard compartment. | $1,322 |
| 3110-0387 | The rearward area of the extra wide roof top compartment above the Zico access ladder to be recessed in 16". The stepping surface to be embossed diamond plate side plates to be diamond plate and forward plate to be FRP smooth plate. | $764 |
| 3110-0388 | Full Height Rear Compartment with Officer Side Storage Tunnel. Includes lower smooth plate panels and upper diamond plate panels and storage access door with "D"-ring latch. | $1,650 |
| 3110-0389 | Full Height Rear Compartment with Upper Ladder Storage Compartment. Includes smooth plate panels. Includes area for storage of (1) 24' (1) 16' (1) 10' Attic (2) pike poles and a drop down storage access door with push button latches (wire to door ajar). | $2,120 |
| 3110-0390 | The rearend area of the extra wide roof top compartment above the folding steps to be recessed in 16". The stepping area to be embossed diamond plate and side and forward plates to be diamond plate. | $764 |
| 3110-0391 | Bolt-on diamond plate tailboard (full width of rear compartment). Additional 12in. of tailboard to run full width of body ("T" shaped tailboard). Includes the enhanced extended side compartment frame work and handrails- (2) vertical on trailing edge of body as applicable and horizontal mounted handrail(s) below hose bed. | $2,335 |
| 3110-0392 | Full Height Rear Compartment with Officer Side Storage Tunnel. Hosebed extrusion to be stepped for storage tunnel if applicable. Includes smooth plate panels and storage access door with D-ring latch. | $1,362 |
| 3110-0393 | Full Height Rear Compartment with Officer Side Storage Tunnel. Includes smooth plate panels and horizontally hinged storage access door with push button latch and rubber bumpers. | $1,156 |
| 3110-0394 | Single Low Rear Compartment with Upper Storage Compartment and Officer Side Storage Tunnel. For use with low hosebed. Includes smooth plate panels and storage access door with push button latch. | $3,076 |
| 3110-0396 | Rear End with no rear compartment and officer side storage tunnel. Includes smooth plate panels and storage access door with d-ring latch. | $804 |
| 3110-0402 | Bolt-on diamond plate tailboard (full width of rear compartment). Additional 7" of tailboard to run full width of body ("T" shaped tailboard). Includes the enhanced extended side compartment frame work and handrails per NFPA requirement. | $2,335 |

| Item No. | Description | |
|---|---|---|
| 3110-0403 | Handrails extruded aluminum installed full length on outboard top edge of driver roof top compartment lids. | $564 |
| 3110-0404 | Full Height Rear Compartment with Upper Storage Compartment and Officer Side Storage Tunnel. Includes smooth plate panels and storage access doors with push button latches.There shall be smooth plate panels each side of upper storage drop down door for rear discharges. Includes a stop bracket approximately 130" back from opening. | $2,869 |
| 3110-0405 | Bolt-on diamond plate 14" tailboard (full width of body). Includes (2) slanted beavertails (no stanchions) with removable outer panels and handrails- (2) vertically on trailing edge of body and horizontally mounted handrail(s) below hosebed. | $1,213 |
| 3110-0406 | Full Height Rear Compartment with Upper Ladder Storage Compartment. Includes smooth plate panels. Includes area for storage of (1) 24' 2-section ladder and a drop down storage access door with push button latches (wire to door ajar). | $2,120 |
| 3110-0407 | Single low rear compartment. For use with low hosebed. Includes smooth plate panels. This is a non transverse compartment. | $991 |
| 3110-0408 | Full Height Rear Compartment with Officer Side Storage Tunnel. Includes smooth plate panels and storage access door with push D-ring style latch. Includes stepped upper horizontal tube to reduce hosebed height from ground over tank area. | $2,258 |
| 3120-0000 | Officer half side body with 24" wide forward and 36" wide rearward compartmentation. Includes adjustable ladder tracks. | $4,313 |
| 3120-0001 | Officer half side body with 24" wide forward and 50" wide rearward extended compartmentation. Includes adjustable ladder tracks. | $4,918 |
| 3120-0003 | Officer half side body with 30" wide forward and 36" wide rearward compartmentation. Includes adjustable ladder tracks. | $4,617 |
| 3120-0004 | Officer half side body with 36" wide forward and 36" wide rearward compartmentation. Includes adjustable ladder tracks. | $4,941 |
| 3120-0005 | Officer half side body with 42" wide forward and 42" wide rearward compartmentation. Includes adjustable ladder tracks. | $5,284 |
| 3120-0006 | Officer half side body with 48" wide forward and 48" wide rearward compartmentation. Includes adjustable ladder tracks. | $5,654 |
| 3120-0007 | Officer half side body with 30" wide forward and 50" wide rearward extended compartmentation. Includes adjustable ladder tracks. | $5,219 |
| 3120-0008 | Officer half side body with 36" wide forward and 50" wide rearward extended compartmentation. Includes adjustable ladder tracks. | $5,542 |
| 3120-0009 | Officer half side body with 42" wide forward and 56" wide rearward extended compartmentation. Includes adjustable ladder tracks. | $5,890 |
| 3120-0010 | Officer half side body with 48" wide forward and 62" wide rearward extended compartmentation. Includes adjustable ladder tracks. | $6,258 |
| 3120-0011 | Officer half side body with 24" wide forward and 50" wide rearward enhanced extended compartmentation. Includes adjustable ladder tracks. | $5,196 |
| 3120-0012 | Officer half side body with 30" wide forward and 50" wide rearward enhanced extended compartmentation. Includes adjustable ladder tracks. | $5,495 |
| 3120-0013 | Officer half side body with 36" wide forward and 50" wide rearward enhanced extended compartmentation. Includes adjustable ladder tracks and ladder brackets. | $5,818 |
| 3120-0014 | Officer half side body with 42" wide forward and 56" wide rearward enhanced extended compartmentation. Includes adjustable ladder tracks. | $6,163 |
| 3120-0015 | Officer half side body with 48" wide forward and 62" wide rearward enhanced extended compartmentation. Includes adjustable ladder tracks. | $6,534 |
| 3120-0016 | Officer 3/4 side body with upper and lower compartmentation. Includes 24" wide forward and 36" wide rearward lower compartments and (3) opening upper compartments. | $5,822 |
| 3120-0017 | Officer 3/4 side body with full height 24" wide forward and 36" wide rearward compartmentation. Includes (1) 56" wide compartment over the wheel well. | $5,392 |
| 3120-0018 | Officer 3/4 side body with upper and lower compartmentation. Includes 30" wide forward and 36" wide rearward lower compartments and (3) opening upper compartments. | $6,200 |
| 3120-0019 | Officer 3/4 side body with upper and lower compartmentation. Includes 36" wide forward and 36" wide rearward lower compartments and (3) opening upper compartments. | $6,603 |
| 3120-0020 | Officer 3/4 side body with upper and lower compartmentation. Includes 42" wide forward and 42" wide rearward lower compartments and (3) opening upper compartments. | $7,035 |
| 3120-0021 | Officer 3/4 side body with upper and lower compartmentation. Includes 48" wide forward and 48" wide rearward lower compartments and (3) opening upper compartments. | $7,498 |
| 3120-0022 | Officer 3/4 side body with full height 30" wide forward and 36" wide rearward compartmentation. Includes (1) 56" wide compartment over the wheel well. | $5,771 |
| 3120-0023 | Officer 3/4 side body with full height 36" wide forward and 36" wide rearward compartmentation. Includes (1) 56" wide compartment over the wheel well. | $6,171 |
| 3120-0024 | Officer 3/4 side body with full height 42" wide forward and 42" wide rearward compartmentation. Includes (1) 56" wide compartment over the wheel well. | $6,604 |

| Item No. | Description | |
|---|---|---|
| 3120-0025 | Officer 3/4 side body with full height 48" wide forward and 48" wide rearward compartmentation. Includes (1) 56" wide compartment over the wheel well. | $7,067 |
| 3120-0026 | Officer 3/4 side body with 24" wide forward and 50" wide rearward extended compartmentation. Includes (1) 56" wide compartment over the wheel well. | $5,995 |
| 3120-0027 | Officer 3/4 side body with 30" wide forward and 50" wide rearward extended compartmentation. Includes (1) 56" wide compartment over the wheel well. | $6,372 |
| 3120-0028 | Officer 3/4 side body with 36" wide forward and 50" wide rearward extended compartmentation. Includes (1) 56" wide compartment over the wheel well. | $6,777 |
| 3120-0029 | Officer 3/4 side body with 42" wide forward and 56" wide rearward extended compartmentation. Includes (1) 56" wide compartment over the wheel well. | $7,208 |
| 3120-0030 | Officer 3/4 side body with 48" wide forward and 62" wide rearward extended compartmentation. Includes (1) 56" wide compartment over the wheel well. | $7,670 |
| 3120-0031 | Officer 3/4 side body with 24" wide forward and 50" wide rearward enhanced extended compartmentation. Includes (1) 56" wide compartment over the wheel well. | $6,272 |
| 3120-0032 | Officer 3/4 side body with 30" wide forward and 50" wide rearward enhanced extended compartmentation. Includes (1) 56" wide compartment over the wheel well. | $6,647 |
| 3120-0033 | Officer 3/4 side body with 36" wide forward and 50" wide rearward enhanced extended compartmentation. Includes (1) 56" wide compartment over the wheel well. | $7,050 |
| 3120-0034 | Officer 3/4 side body with 42" wide forward and 50" wide rearward enhanced extended compartmentation. Includes (1) 56" wide compartment over the wheel well. | $7,484 |
| 3120-0035 | Officer 3/4 side body with 48" wide forward and 62" wide rearward enhanced extended compartmentation. Includes (1) 56" wide compartment over the wheel well. | $7,947 |
| 3120-0036 | Officer side body with full height 24" wide forward and 36" wide rearward compartmentation. Includes (1) 33" wide compartment (forward) over the wheel well and (1) Zico Overhead Ladder Rack. | $14,917 |
| 3120-0037 | Officer side body with full height 30" wide forward and 36" wide rearward compartmentation. Includes (1) 33" wide compartment (forward) over the wheel well and (1) Zico Overhead Ladder Rack. | $15,520 |
| 3120-0038 | Officer side body with full height 36" wide forward and 36" wide rearward compartmentation. Includes (1) 33" wide compartment (forward) over the wheel well and (1) Zico Overhead Ladder Rack. | $16,164 |
| 3120-0039 | Officer side body with full height 42" wide forward and 42" wide rearward compartmentation. Includes (1) 33" wide compartment (forward) over the wheel well and (1) Zico Overhead Ladder Rack. | $16,857 |
| 3120-0040 | Officer side body with full height 48" wide forward and 48" wide rearward compartmentation. Includes (1) 33" wide compartment (forward) over the wheel well and (1) Zico Overhead Ladder Rack. | $17,594 |
| 3120-0041 | Officer side body with full height 24" wide forward and 50" wide rearward extended compartmentation. Includes (1) 33" wide compartment (forward) over the wheel well and (1) Zico Overhead Ladder Rack. | $15,520 |
| 3120-0042 | Officer side body with full height 30" wide forward and 50" wide rearward extended compartmentation. Includes (1) 33" wide compartment (forward) over the wheel well and (1) Zico Overhead Ladder Rack. | $16,124 |
| 3120-0043 | Officer side body with full height 36" wide forward and 50" wide rearward extended compartmentation. Includes (1) 33" wide compartment (forward) over the wheel well and (1) Zico Overhead Ladder Rack. | $16,769 |
| 3120-0044 | Officer side body with full height 42" wide forward and 56" wide rearward extended compartmentation. Includes (1) 33" wide compartment (forward) over the wheel well and (1) Zico Overhead Ladder Rack. | $17,460 |
| 3120-0045 | Officer side body with full height 48" wide forward and 62" wide rearward extended compartmentation. Includes (1) 33" wide compartment (forward) over the wheel well and (1) Zico Overhead Ladder Rack. | $18,199 |
| 3120-0046 | Officer side body with full height 24" wide forward and 50" wide rearward enhanced extended compartmentation. Includes (1) 33" wide compartment (forward) over the wheel well and (1) Zico Overhead Ladder Rack. | $15,799 |
| 3120-0047 | Officer side body with full height 30" wide forward and 50" wide rearward enhanced extended compartmentation. Includes (1) 33" wide compartment (forward) over the wheel well and (1) Zico Overhead Ladder Rack. | $16,400 |
| 3120-0048 | Officer side body with full height 36" wide forward and 50" wide rearward enhanced extended compartmentation. Includes (1) 33" wide compartment (forward) over the wheel well and (1) Zico Overhead Ladder Rack. | $17,044 |
| 3120-0049 | Officer side body with full height 42" wide forward and 56" wide rearward enhanced extended compartmentation. Includes (1) 33" wide compartment (forward) over the wheel well and (1) Zico Overhead Ladder Rack. | $17,736 |
| 3120-0050 | Officer side body with full height 48" wide forward and 62" wide rearward enhanced extended compartmentation. Includes (1) 33" wide compartment (forward) over the wheel well and (1) Zico Overhead Ladder Rack. | $18,474 |
| 3120-0051 | Officer half side body with 36" wide forward and 36" wide rearward compartmentation. Includes adjustable ladder tracks and 30 degree rear body angle for greater angle of departure. | $4,951 |

| Item No. | Description | |
|---|---|---|
| 3120-0052 | Officer 3/4 side body with full height 24" wide forward and 36" wide rearward compartmentation. Includes (1) 56" wide compartment over the wheel well and 30 degree rear body angle for greater angle of departure. | $9,275 |
| 3120-0053 | Officer 3/4 side body with full height 30" wide forward and 36" wide rearward compartmentation. Includes (1) 56" wide compartment over the wheel well and 30 degree rear body angle for greater angle of departure. | $9,568 |
| 3120-0054 | Officer 3/4 side body with full height 36" wide forward and 36" wide rearward compartmentation. Includes (1) 56" wide compartment over the wheel well and 30 degree rear body angle for greater angle of departure. | $9,862 |
| 3120-0055 | Officer side body with full height 24" wide forward and 36" wide rearward compartmentation. Includes (1) 33" wide compartment (forward) over the wheel well (1) Zico Overhead Ladder Rack and 30 degree rear body angle for greater angle of departure. | $16,848 |
| 3120-0056 | Officer side body with full height 30" wide forward and 36" wide rearward compartmentation. Includes (1) 33" wide compartment (forward) over the wheel well (1) Zico Overhead Ladder Rack and 30 degree rear body angle for greater angle of departure. | $17,142 |
| 3120-0057 | Officer side body with full height 36" wide forward and 36" wide rearward compartmentation. Includes (1) 33" wide compartment (forward) over the wheel well (1) Zico Overhead Ladder Rack and 30 degree rear body angle for greater angle of departure. | $17,436 |
| 3120-0058 | Stainless steel officer half side body with 48" wide forward and 48" wide rearward compartmentation (interior). Includes adjustable ladder tracks. | $6,218 |
| 3120-0059 | Stainless steel officer half side body with 48" wide forward and 60" wide rearward compartmentation (interior). Includes adjustable ladder tracks. | $6,530 |
| 3120-0060 | Stainless steel officer half side body with 60" wide forward and 60" wide rearward compartmentation (interior). Includes adjustable ladder tracks. | $6,654 |
| 3120-0061 | Stainless steel officer 3/4 side body with full height 36" wide forward and 48" wide rearward compartmentation (interior). Includes (1) 60" wide compartment over the wheel well. | $6,791 |
| 3120-0062 | Stainless steel officer 3/4 side body with full height 48" wide forward and 48" wide rearward compartmentation (interior). Includes (1) 60" wide compartment over the wheel well. | $7,771 |
| 3120-0063 | Stainless steel officer 3/4 side body with full height 48" wide forward and 60" wide rearward compartmentation (interior). Includes (1) 60" wide compartment over the wheel well. | $8,162 |
| 3120-0064 | Stainless steel officer 3/4 side body with full height 60" wide forward and 60" wide rearward compartmentation (interior). Includes (1) 60" wide compartment over the wheel well. | $8,316 |
| 3120-0065 | Stainless steel officer side body with full height 36" wide forward and 48" wide rearward compartmentation (interior). Includes (1) 45" wide compartment (rearward) over the wheel well and (1) Zico Overhead Ladder Rack. | $17,783 |
| 3120-0066 | Stainless steel officer side body with full height 48" wide forward and 48" wide rearward compartmentation (interior). Includes (1) 45" wide compartment (rearward) over the wheel well and (1) Zico Overhead Ladder Rack. | $19,354 |
| 3120-0067 | Stainless steel officer side body with full height 48" wide forward and 60" wide rearward compartmentation (interior). Includes (1) 45" wide compartment (rearward) over the wheel well and (1) Zico Overhead Ladder Rack. | $22,101 |
| 3120-0068 | Stainless steel officer side body with full height 60" wide forward and 60" wide rearward compartmentation (interior). Includes (1) 45" wide compartment (rearward) over the wheel well and (1) Zico Overhead Ladder Rack. | $20,223 |
| 3120-0069 | Stainless steel officer side body with full height 48" wide forward and 60" wide rearward compartmentation (interior). Includes (1) 60" wide compartment over the wheel well. For use with in the hosebed area ladder storage. | $13,055 |
| 3120-0070 | Stainless steel officer side body with full height 60" wide forward and 60" wide rearward compartmentation (interior). Includes (1) 60" wide compartment over the wheel well. For use with in the hosebed area or thru the tank ladder storage. | $13,305 |
| 3120-0080 | Officer side body with full height 36" wide forward and 36" wide rearward compartmentation. Includes (1) 33" wide compartment (forward) over the wheel well and (1) Zico Overhead Ladder Rack. | $17,296 |
| 3120-0081 | Officer side body with full height 42" wide forward and 42" wide rearward compartmentation. Includes (1) 33" wide compartment (forward) over the wheel well and (1) Zico Overhead Ladder Rack. | $18,036 |
| 3120-0082 | Officer side body with full height 48" wide forward and 48" wide rearward compartmentation. Includes (1) 33" wide compartment (forward) over the wheel well and (1) Zico Overhead Ladder Rack. | $18,828 |
| 3120-0083 | Officer side body with full height 36" wide forward and 36" wide rearward compartmentation. Includes (1) 56" wide compartment over the wheel well and one (1)ladder storage tunnel and access door at rear. | $13,365 |
| 3120-0084 | Officer side body with full height 42" wide forward and 42" wide rearward compartmentation. Includes (1) 56" wide compartment over the wheel well and one (1)ladder storage tunnel and access door at rear. | $14,103 |

| Item No. | Description | |
|---|---|---|
| 3120-0085 | Officer side body with full height 48" wide forward and 48" wide rearward compartmentation. Includes (1) 56" wide compartment over the wheel well and one (1)ladder storage tunnel and access door at rear. | $14,894 |
| 3120-0086 | Officer side body with full height 42" wide forward and 42" wide rearward compartmentation. Includes (1) 56" wide compartment over the wheel well. | $11,302 |
| 3120-0087 | Officer side body with full height 48" wide forward and 48" wide rearward compartmentation. Includes (1) 56" wide compartment over the wheel well. For use with thru the tank ladder. | $12,093 |
| 3120-0088 | Officer side body with full height 60" wide forward and 42" wide rearward compartmentation. Includes (1) 33" wide compartment (forward) over the wheel well and (1) Zico Overhead Ladder Rack. | $19,674 |
| 3120-0089 | Officer side body with full height 60" wide forward and 42" wide rearward compartmentation. Includes (1) 56" wide compartment over the wheel well and one (1)ladder storage tunnel and access door at rear. | $15,743 |
| 3120-0090 | Officer side body with full height 60" wide forward and 42" wide rearward compartmentation. Includes (1) 56" wide compartment over the wheel well. For use with thru the tank ladder storage. | $12,941 |
| 3120-0091 | Officer half side body with 36" wide rearward compartmentation. Includes adjustable ladder tracks and 30 degree rear body angle for greater angle of departure. | $2,488 |
| 3120-0092 | Officer 3/4 side body with full height 36" wide rearward compartmentation. Includes (1) 56" wide compartment over the wheel well and 30 degree rear body angle for greater angle of departure. | $8,367 |
| 3120-0093 | Officer half side body with 36" wide rearward compartmentation. Includes adjustable ladder tracks. | $2,663 |
| 3120-0094 | Officer 3/4 side body with full height 36" wide rearward compartmentation. Includes (1) 56" wide compartment over the wheel well. | $4,913 |
| 3120-0095 | Officer full height side body with upper and lower compartmentation. Includes 42" wide forward and 42" wide rearward lower compartments and (3) opening upper compartments. For use with ladder storage thru tank. | $10,996 |
| 3120-0096 | Officer side body with full height 42" wide forward and 42" wide rearward compartmentation. Includes (1) 56" wide compartment over the wheel well. For use with ladder storage thru tank. | $10,565 |
| 3120-0097 | Officer full height side body with upper and lower compartmentation. Includes 48" wide forward and 48" wide rearward lower compartments and (3) opening upper compartments. For use with ladder storage thru tank. | $11,735 |
| 3120-0098 | Officer side body with full height 48" wide forward and 48" wide rearward compartmentation. Includes (1) 56" wide compartment over the wheel well. For use with ladder storage thru tank. | $11,302 |
| 3120-0099 | Officer side body with full height 42" wide forward and 56" wide rearward extended compartmentation. Includes (1) 56" wide compartment over the wheel well. | $11,168 |
| 3120-0100 | Officer side body with full height 42" wide forward and 56" wide rearward enhanced extended compartmentation. Includes (1) 56" wide compartment over the wheel well. | $11,445 |
| 3120-0101 | Officer side body with full height 48" wide forward and 62" wide rearward extended compartmentation. Includes (1) 56" wide compartment over the wheel well. | $11,907 |
| 3120-0102 | Officer side body with full height 48" wide forward and 62" wide rearward enhanced extended compartmentation. Includes (1) 56" wide compartment over the wheel well. | $12,182 |
| 3120-0104 | Stainless steel officer 3/4 side body with full height 36" wide forward and 48" wide rearward compartmentation (interior). Includes (1) 60" wide compartment over the wheel well. | $12,475 |
| 3120-0105 | Stainless steel officer 3/4 side body with full height 48" wide forward and 48" wide rearward compartmentation (interior). Includes (1) 60" wide compartment over the wheel well. | $13,105 |
| 3120-0106 | Stainless steel officer 3/4 side body with full height 60" wide forward and 60" wide rearward compartmentation (interior). Includes (1) 60" wide compartment over the wheel well. | $14,364 |
| 3120-0107 | Stainless steel officer 3/4 side body with full height 48" wide forward and 60" wide rearward compartmentation (interior). Includes (1) 60" wide compartment over the wheel well. | $13,733 |
| 3120-0108 | Stainless steel officer side body with full height 36" wide forward and 48" wide (interior) rearward compartmentation. Includes (1) 45" wide (interior) compartment (forward) over the wheel well and (1) Zico Overhead Ladder Rack. | $19,024 |
| 3120-0109 | Stainless steel officer side body with full height 48" wide forward and 48" wide (interior) rearward compartmentation. Includes (1) 45" wide (interior) compartment (forward) over the wheel well and (1) Zico Overhead Ladder Rack. | $20,709 |
| 3120-0110 | Stainless steel officer side body with full height 60" wide forward and 60" wide (interior) rearward compartmentation. Includes (1) 45" wide (interior) compartment (forward) over the wheel well and (1) Zico Overhead Ladder Rack. | $21,640 |
| 3120-0111 | Stainless steel officer side body with full height 48" wide forward and 60" wide (interior) rearward compartmentation. Includes (1) 45" wide (interior) compartment (forward) over the wheel well and (1) Zico Overhead Ladder Rack. | $21,330 |
| 3120-0112 | Stainless steel officer side body with full height 36" wide forward and 48" wide rearward (interior) compartmentation. Includes (1) 60" wide compartment over the wheel well. For use with in the hosebed ladder storage. | $11,619 |

| Item No. | Description | |
|---|---|---|
| 3120-0113 | Stainless steel officer side body with full height 48" wide forward and 48" wide rearward (interior) compartmentation. Includes (1) 60" wide compartment over the wheel well. For use with in the hosebed ladder storage. | $13,305 |
| 3120-0114 | Stainless steel officer side body with full height 48" wide forward and 60" wide rearward (interior) compartmentation. Includes (1) 60" wide compartment over the wheel well. For use with in the hosebed ladder storage. | $13,703 |
| 3120-0115 | Stainless steel officer side body with full height 60" wide forward and 60" wide rearward (interior) compartmentation. Includes (1) 60" wide compartment over the wheel well. For use with in the hosebed ladder storage. | $13,305 |
| 3120-0116 | Stainless steel officer side body with full height 36" wide forward and 48" wide (interior) rearward compartmentation. Includes (1) 60" wide compartment over the wheel well and one (1) ladder storage tunnel and access door at rear with push-button latch. | $15,095 |
| 3120-0117 | Stainless steel officer side body with full height 48" wide forward and 48" wide (interior) rearward compartmentation. Includes (1) 60" wide compartment over the wheel well and one (1) ladder storage tunnel and access door at rear with push-button latch. | $16,778 |
| 3120-0118 | Stainless steel officer side body with full height 48" wide forward and 60" wide (interior) rearward compartmentation. Includes (1) 60" wide compartment over the wheel well and one (1) ladder storage tunnel and access door at rear with push-button latch. | $17,618 |
| 3120-0119 | Stainless steel officer side body with full height 60" wide forward and 60" wide (interior) rearward compartmentation. Includes (1) 60" wide compartment over the wheel well and one (1) ladder storage tunnel and access door at rear with push-button latch. | $17,708 |
| 3120-0121 | Officer side body with full height 36" wide forward and 36" wide rearward compartmentation. Includes (1) 56" wide compartment over the wheel well. | $10,511 |
| 3120-0123 | Officer half side body with 60" wide forward and 42" wide rearward compartmentation. Includes adjustable ladder tracks. | $6,050 |
| 3120-0124 | Officer 3/4 side body with full height 60" wide forward and 42" wide rearward compartmentation. Includes (1) 56" wide compartment over the wheel well. | $7,561 |
| 3120-0125 | Officer 3/4 side body with upper and lower compartmentation. Includes 60" wide forward and 42" wide rearward lower compartments and (3) opening upper compartments. | $8,021 |
| 3120-0126 | Officer side body with full height 60" wide forward and 42" wide rearward compartmentation. Includes (1) 56" wide compartment over the wheel well. For use with ladder storage thru tank. | $12,093 |
| 3120-0127 | Officer full height side body with upper and lower compartmentation. Includes 60" wide forward and 42" wide rearward lower compartments and (3) opening upper compartments. For use with ladder storage thru tank. | $12,555 |
| 3120-0128 | Officer side body with full height 60" wide forward and 42" wide rearward compartmentation. Includes (1) 33" wide compartment (forward) over the wheel well and (1) Zico Overhead Ladder Rack. | $18,036 |
| 3120-0132 | Officer side body with full height 30" wide forward and 50" wide rearward extended compartmentation. Includes (1) 56" wide compartment over the wheel well and (1) 2-Arm Ladder Rack. The ladder rack is to be painted job color and includes amber lights on each end to visually indicate when the rack is in motion. | $28,713 |
| 3120-0135 | Officer side body with full height 36" wide forward and 36" wide rearward compartmentation. Includes (1) 56" wide compartment over the wheel well. For use with over the hosebed storage rack. | $9,885 |
| 3120-0138 | Officer 3/4 side body with upper and lower compartmentation. Includes 24" wide forward and 36" wide rearward lower compartments and (3) opening upper compartments. | $5,822 |
| 3120-0139 | Officer 3/4 side body with full height 24" wide forward and 36" wide rearward compartmentation. Includes (1) 56" wide compartment over the wheel well. | $5,392 |
| 3120-0140 | Officer 3/4 side body with upper and lower compartmentation. Includes 30" wide forward and 36" wide rearward lower compartments and (3) opening upper compartments. | $6,200 |
| 3120-0141 | Officer 3/4 side body with upper and lower compartmentation. Includes 36" wide forward and 36" wide rearward lower compartments and (3) opening upper compartments. | $6,603 |
| 3120-0142 | Officer 3/4 side body with upper and lower compartmentation. Includes 42" wide forward and 42" wide rearward lower compartments and (3) opening upper compartments. | $7,035 |
| 3120-0143 | Officer 3/4 side body with upper and lower compartmentation. Includes 48" wide forward and 48" wide rearward lower compartments and (3) opening upper compartments. | $7,498 |
| 3120-0144 | Officer 3/4 side body with full height 30" wide forward and 36" wide rearward compartmentation. Includes (1) 56" wide compartment over the wheel well. | $5,771 |
| 3120-0145 | Officer 3/4 side body with full height 36" wide forward and 36" wide rearward compartmentation. Includes (1) 56" wide compartment over the wheel well. | $6,171 |
| 3120-0146 | Officer 3/4 side body with full height 42" wide forward and 42" wide rearward compartmentation. Includes (1) 56" wide compartment over the wheel well. | $6,604 |
| 3120-0147 | Officer 3/4 side body with full height 48" wide forward and 48" wide rearward compartmentation. Includes (1) 56" wide compartment over the wheel well. | $7,067 |

| Item No. | Description | |
|---|---|---|
| 3120-0148 | Officer 3/4 side body with 24" wide forward and 50" wide rearward extended compartmentation. Includes (1) 56" wide compartment over the wheel well. | $5,995 |
| 3120-0149 | Officer 3/4 side body with 30" wide forward and 50" wide rearward extended compartmentation. Includes (1) 56" wide compartment over the wheel well. | $6,372 |
| 3120-0150 | Officer 3/4 side body with 36" wide forward and 50" wide rearward extended compartmentation. Includes (1) 56" wide compartment over the wheel well. | $6,777 |
| 3120-0151 | Officer 3/4 side body with 42" wide forward and 56" wide rearward extended compartmentation. Includes (1) 56" wide compartment over the wheel well. | $7,208 |
| 3120-0152 | Officer 3/4 side body with 48" wide forward and 62" wide rearward extended compartmentation. Includes (1) 56" wide compartment over the wheel well. | $7,670 |
| 3120-0153 | Officer 3/4 side body with 24" wide forward and 50" wide rearward enhanced extended compartmentation. Includes (1) 56" wide compartment over the wheel well. | $6,272 |
| 3120-0154 | Officer 3/4 side body with 30" wide forward and 50" wide rearward enhanced extended compartmentation. Includes (1) 56" wide compartment over the wheel well. | $6,647 |
| 3120-0155 | Officer 3/4 side body with 36" wide forward and 50" wide rearward enhanced extended compartmentation. Includes (1) 56" wide compartment over the wheel well. | $7,050 |
| 3120-0156 | Officer 3/4 side body with 42" wide forward and 56" wide rearward enhanced extended compartmentation. Includes (1) 56" wide compartment over the wheel well. | $7,484 |
| 3120-0157 | Officer 3/4 side body with 48" wide forward and 62" wide rearward enhanced extended compartmentation. Includes (1) 56" wide compartment over the wheel well. | $7,947 |
| 3120-0158 | Officer side body with full height 24" wide forward and 36" wide rearward compartmentation. Includes (1) 33" wide compartment over the wheel well and (1) Zico Overhead Ladder Rack. | $14,917 |
| 3120-0159 | Officer side body with full height 30" wide forward and 36" wide rearward compartmentation. Includes (1) 33" wide compartment over the wheel well and (1) Zico Overhead Ladder Rack. | $15,520 |
| 3120-0160 | Officer side body with full height 36" wide forward and 36" wide rearward compartmentation. Includes (1) 33" wide compartment over the wheel well and (1) Zico Overhead Ladder Rack. | $16,164 |
| 3120-0161 | Officer side body with full height 42" wide forward and 42" wide rearward compartmentation. Includes (1) 33" wide compartment over the wheel well and (1) Zico Overhead Ladder Rack. | $16,857 |
| 3120-0162 | Officer side body with full height 48" wide forward and 48" wide rearward compartmentation. Includes (1) 33" wide compartment over the wheel well and (1) Zico Overhead Ladder Rack. | $17,594 |
| 3120-0163 | Officer side body with full height 24" wide forward and 50" wide rearward extended compartmentation. Includes (1) 33" wide compartment over the wheel well and (1) Zico Overhead Ladder Rack. | $15,520 |
| 3120-0164 | Officer side body with full height 30" wide forward and 50" wide rearward extended compartmentation. Includes (1) 33" wide compartment over the wheel well and (1) Zico Overhead Ladder Rack. | $16,124 |
| 3120-0165 | Officer side body with full height 36" wide forward and 50" wide rearward extended compartmentation. Includes (1) 33" wide compartment over the wheel well and (1) Zico Overhead Ladder Rack. | $16,769 |
| 3120-0166 | Officer side body with full height 42" wide forward and 56" wide rearward extended compartmentation. Includes (1) 33" wide compartment over the wheel well and (1) Zico Overhead Ladder Rack. | $17,460 |
| 3120-0167 | Officer side body with full height 48" wide forward and 62" wide rearward extended compartmentation. Includes (1) 33" wide compartment over the wheel well and (1) Zico Overhead Ladder Rack. | $18,199 |
| 3120-0168 | Officer side body with full height 24" wide forward and 50" wide rearward enhanced extended compartmentation. Includes (1) 33" wide compartment over the wheel well and (1) Zico Overhead Ladder Rack. | $15,799 |
| 3120-0169 | Officer side body with full height 30" wide forward and 50" wide rearward enhanced extended compartmentation. Includes (1) 33" wide compartment over the wheel well and (1) Zico Overhead Ladder Rack. | $16,400 |
| 3120-0170 | Officer side body with full height 36" wide forward and 50" wide rearward enhanced extended compartmentation. Includes (1) 33" wide compartment over the wheel well and (1) Zico Overhead Ladder Rack. | $17,044 |
| 3120-0171 | Officer side body with full height 42" wide forward and 56" wide rearward enhanced extended compartmentation. Includes (1) 33" wide compartment over the wheel well and (1) Zico Overhead Ladder Rack. | $17,736 |
| 3120-0172 | Officer side body with full height 48" wide forward and 62" wide rearward enhanced extended compartmentation. Includes (1) 33" wide compartment over the wheel well and (1) Zico Overhead Ladder Rack. | $18,474 |
| 3120-0173 | Officer 3/4 side body with full height 24" wide forward and 36" wide rearward compartmentation. Includes (1) 56" wide compartment over the wheel well and 30 degree rear body angle for greater angle of departure. | $9,275 |

| Item No. | Description | |
|---|---|---|
| 3120-0174 | Officer 3/4 side body with full height 30" wide forward and 36" wide rearward compartmentation. Includes (1) 56" wide compartment over the wheel well and 30 degree rear body angle for greater angle of departure. | $9,568 |
| 3120-0175 | Officer 3/4 side body with full height 36" wide forward and 36" wide rearward compartmentation. Includes (1) 56" wide compartment over the wheel well and 30 degree rear body angle for greater angle of departure. | $9,862 |
| 3120-0176 | Officer side body with full height 24" wide forward and 36" wide rearward compartmentation. Includes (1) 33" wide compartment over the wheel well and (1) Zico Overhead Ladder Rack. Rear bottom corner of truck will be angled 30 degrees for a greater rear angle of departure. | $16,848 |
| 3120-0177 | Officer side body with full height 30" wide forward and 36" wide rearward compartmentation. Includes (1) 33" wide compartment over the wheel well (1) Zico Overhead Ladder Rack and 30 degree rear body angle for greater angle of departure. | $17,142 |
| 3120-0178 | Officer side body with full height 36" wide forward and 36" wide rearward compartmentation. Includes (1) 33" wide compartment over the wheel well (1) Zico Overhead Ladder Rack and 30 degree rear body angle for greater angle of departure. | $17,436 |
| 3120-0179 | Stainless steel officer 3/4 side body with full height 36" wide forward and 48" wide rearward compartmentation (interior). Includes (1) 60" wide compartment over the wheel well. | $6,791 |
| 3120-0180 | Stainless steel officer 3/4 side body with full height 48" wide forward and 48" wide rearward compartmentation (interior). Includes (1) 60" wide compartment over the wheel well. | $7,771 |
| 3120-0181 | Stainless steel officer 3/4 side body with full height 48" wide forward and 60" wide rearward compartmentation (interior). Includes (1) 60" wide compartment over the wheel well. | $8,162 |
| 3120-0182 | Stainless steel officer 3/4 side body with full height 60" wide forward and 60" wide rearward compartmentation (interior). Includes (1) 60" wide compartment over the wheel well. | $8,316 |
| 3120-0183 | Stainless steel officer side body with full height 36" wide forward and 48" wide rearward compartmentation (interior). Includes (1) 45" wide compartment over the wheel well and (1) Zico Overhead Ladder Rack. | $17,783 |
| 3120-0184 | Stainless steel officer side body with full height 48" wide forward and 48" wide rearward compartmentation (interior). Includes (1) 45" wide compartment over the wheel well and (1) Zico Overhead Ladder Rack. | $19,354 |
| 3120-0185 | Stainless steel officer side body with full height 48" wide forward and 60" wide rearward compartmentation (interior). Includes (1) 45" wide compartment over the wheel well and (1) Zico Overhead Ladder Rack. | $22,101 |
| 3120-0186 | Stainless steel officer side body with full height 60" wide forward and 60" wide rearward compartmentation (interior). Includes (1) 45" wide compartment over the wheel well and (1) Zico Overhead Ladder Rack. | $20,223 |
| 3120-0187 | Stainless steel officer side body with full height 48" wide forward and 60" wide rearward compartmentation (interior). Includes (1) 60" wide compartment over the wheel well. For use with in the hosebed area ladder storage. | $13,055 |
| 3120-0188 | Stainless steel officer side body with full height 60" wide forward and 60" wide rearward compartmentation (interior). Includes (1) 60" wide compartment over the wheel well. For use with in the hosebed area or thru the tank ladder storage. | $13,305 |
| 3120-0189 | Officer side body with full height 36" wide forward and 36" wide rearward compartmentation. Includes (1) 33" wide compartment over the wheel well and (1) Zico Overhead Ladder Rack. | $17,296 |
| 3120-0190 | Officer side body with full height 42" wide forward and 42" wide rearward compartmentation. Includes (1) 33" wide compartment over the wheel well and (1) Zico Overhead Ladder Rack. | $18,036 |
| 3120-0191 | Officer side body with full height 48" wide forward and 48" wide rearward compartmentation. Includes (1) 33" wide compartment over the wheel well and (1) Zico Overhead Ladder Rack. | $18,828 |
| 3120-0192 | Officer side body with full height 36" wide forward and 36" wide rearward compartmentation. Includes (1) 56" wide compartment over the wheel well and one (1) storage tunnel. | $13,365 |
| 3120-0193 | Officer side body with full height 42" wide forward and 42" wide rearward compartmentation. Includes (1) 56" wide compartment over the wheel well and one (1) storage tunnel. | $14,103 |
| 3120-0194 | Officer side body with full height 48" wide forward and 48" wide rearward compartmentation. Includes (1) 56" wide compartment over the wheel well and one (1) storage tunnel. | $14,894 |
| 3120-0195 | Officer side body with full height 42" wide forward and 42" wide rearward compartmentation. Includes (1) 56" wide compartment over the wheel well. | $11,302 |
| 3120-0196 | Officer side body with full height 48" wide forward and 48" wide rearward compartmentation. Includes (1) 56" wide compartment over the wheel well. | $12,093 |
| 3120-0197 | Officer side body with full height 60" wide forward and 42" wide rearward compartmentation. Includes (1) 33" wide compartment over the wheel well and (1) Zico Overhead Ladder Rack. | $19,674 |
| 3120-0198 | Officer side body with full height 60" wide forward and 42" wide rearward compartmentation. Includes (1) 56" wide compartment over the wheel well and one (1) storage tunnel. | $15,743 |
| 3120-0199 | Officer side body with full height 60" wide forward and 42" wide rearward compartmentation. Includes (1) 56" wide compartment over the wheel well. | $12,941 |
| 3120-0200 | Officer 3/4 side body with full height 36" wide rearward compartmentation. Includes (1) 56" wide compartment over the wheel well and 30 degree rear body angle for greater angle of departure. | $8,367 |

| Item No. | Description | |
|---|---|---|
| 3120-0201 | Officer 3/4 side body with full height 36" wide rearward compartmentation. Includes (1) 56" wide compartment over the wheel well. | $4,913 |
| 3120-0202 | Officer full height side body with upper and lower compartmentation. Includes 42" wide forward and 42" wide rearward lower compartments and (3) opening upper compartments. For use with ladder storage thru tank. | $10,996 |
| 3120-0203 | Officer side body with full height 42" wide forward and 42" wide rearward compartmentation. Includes (1) 56" wide compartment over the wheel well. | $10,565 |
| 3120-0204 | Officer full height side body with upper and lower compartmentation. Includes 48" wide forward and 48" wide rearward lower compartments and (3) opening upper compartments. For use with ladder storage thru tank. | $11,735 |
| 3120-0205 | Officer side body with full height 48" wide forward and 48" wide rearward compartmentation. Includes (1) 56" wide compartment over the wheel well. | $11,302 |
| 3120-0206 | Officer side body with full height 42" wide forward and 56" wide rearward extended compartmentation. Includes (1) 56" wide compartment over the wheel well. | $11,168 |
| 3120-0207 | Officer side body with full height 42" wide forward and 56" wide rearward enhanced extended compartmentation. Includes (1) 56" wide compartment over the wheel well. | $11,445 |
| 3120-0208 | Officer side body with full height 48" wide forward and 62" wide rearward extended compartmentation. Includes (1) 56" wide compartment over the wheel well. | $11,907 |
| 3120-0209 | Officer side body with full height 48" wide forward and 62" wide rearward enhanced extended compartmentation. Includes (1) 56" wide compartment over the wheel well. | $12,182 |
| 3120-0210 | Stainless steel officer 3/4 side body with full height 36" wide forward and 48" wide rearward compartmentation (interior). Includes (1) 60" wide compartment over the wheel well. | $12,475 |
| 3120-0211 | Stainless steel officer 3/4 side body with full height 48" wide forward and 48" wide rearward compartmentation (interior). Includes (1) 60" wide compartment over the wheel well. | $13,105 |
| 3120-0212 | Stainless steel officer 3/4 side body with full height 60" wide forward and 60" wide rearward compartmentation (interior). Includes (1) 60" wide compartment over the wheel well. | $14,364 |
| 3120-0213 | Stainless steel officer 3/4 side body with full height 48" wide forward and 60" wide rearward compartmentation (interior). Includes (1) 60" wide compartment over the wheel well. | $13,733 |
| 3120-0214 | Stainless steel officer side body with full height 36" wide forward and 48" wide (interior) rearward compartmentation. Includes (1) 45" wide (interior) compartment over the wheel well and (1) Zico Overhead Ladder Rack. | $19,024 |
| 3120-0215 | Stainless steel officer side body with full height 48" wide forward and 48" wide (interior) rearward compartmentation. Includes (1) 45" wide (interior) compartment over the wheel well and (1) Zico Overhead Ladder Rack. | $20,709 |
| 3120-0216 | Stainless steel officer side body with full height 60" wide forward and 60" wide (interior) rearward compartmentation. Includes (1) 45" wide (interior) compartment over the wheel well and (1) Zico Overhead Ladder Rack. | $21,640 |
| 3120-0217 | Stainless steel officer side body with full height 48" wide forward and 60" wide (interior) rearward compartmentation. Includes (1) 45" wide (interior) compartment over the wheel well and (1) Zico Overhead Ladder Rack. | $21,330 |
| 3120-0222 | Stainless steel officer side body with full height 36" wide forward and 48" wide (interior) rearward compartmentation. Includes (1) 60" wide compartment over the wheel well and one (1) ladder storage tunnel and access door at rear with push-button latch. | $15,095 |
| 3120-0223 | Stainless steel officer side body with full height 48" wide forward and 48" wide (interior) rearward compartmentation. Includes (1) 60" wide compartment over the wheel well and one (1) ladder storage tunnel and access door at rear with push-button latch. | $16,778 |
| 3120-0224 | Stainless Steel Officer side body with full height 48" wide forward and 60" wide (interior) rearward compartmentation. Includes (1) 60" wide compartment over the wheel well and one (1) ladder storage tunnel and access door at rear with push-button latch. | $17,618 |
| 3120-0225 | Stainless steel officer side body with full height 60" wide forward and 60" wide (interior) rearward compartmentation. Includes (1) 60" wide compartment over the wheel well and one (1) ladder storage tunnel and access door at rear with push-button latch. | $17,708 |
| 3120-0226 | Officer side body with full height 36" wide forward and 36" wide rearward compartmentation. Includes (1) 56" wide compartment over the wheel well. | $10,511 |
| 3120-0227 | Officer 3/4 side body with full height 60" wide forward and 42" wide rearward compartmentation. Includes (1) 56" wide compartment over the wheel well. | $7,561 |
| 3120-0228 | Officer 3/4 side body with upper and lower compartmentation. Includes 60" wide forward and 42" wide rearward lower compartments and (3) opening upper compartments. | $8,021 |
| 3120-0229 | Officer side body with full height 60" wide forward and 42" wide rearward compartmentation. Includes (1) 56" wide compartment over the wheel well. | $12,093 |
| 3120-0230 | Officer full height side body with upper and lower compartmentation. Includes 60" wide forward and 42" wide rearward lower compartments and (3) opening upper compartments. For use with ladder storage thru tank. | $12,555 |
| 3120-0231 | Officer side body with full height 60" wide forward and 42" wide rearward compartmentation. Includes (1) 33" wide compartment over the wheel well and (1) Zico Overhead Ladder Rack. | $18,036 |

| Item No. | Description | |
|---|---|---|
| 3120-0232 | Officer side body with full height 36" wide forward and 36" wide rearward compartmentation. Includes (1) 56" wide compartment over the wheel well. | $9,885 |
| 3120-0234 | Officer side body with full height 48" wide forward and 48" wide rearward compartmentation. Includes (1) 56" wide compartment over the wheel well. | $12,093 |
| 3120-0236 | Overhead Ladder Rack to be offset forward includes shifting compartment (rearward) over the wheel well. | $585 |
| 3120-0238 | Officer full height side body with upper and lower compartmentation. Includes 36" wide forward and 36" wide rearward lower compartments and (2) opening upper compartments. Includes (1) Zico Overhead Ladder Rack mounted centered between upper compartments. | $19,616 |
| 3120-0239 | Officer side compartment top storage box (PR). Locate one forward and one rearward of the ladder rack. Boxes to be smooth plate and painted job color with diamond plate tops. The rearward box to have a rear vertically hinged door with push-button latch. Boxes to have (1) diamond plate lid each with push button latch. | $1,833 |
| 3120-0240 | Officer 3/4 side body with upper and lower compartmentation. Includes 24" wide forward and 36" wide rearward lower compartments and (2) opening upper compartments. | $5,822 |
| 3120-0241 | Compartment R1 to have rescue style interior compartment height. | $1,465 |
| 3120-0242 | Officer side tunnel to hold: (1) 1500 gallon Fol-da-tank. | $614 |
| 3120-0243 | Officer 3/4 side body with full height 42" wide forward and 48" wide rearward compartmentation. Includes (1) 56" wide compartment over the wheel well. | $6,604 |
| 3120-0244 | Officer side body with full height 30" wide forward and 50" wide rearward extended compartmentation. Includes (1) 56" wide compartment over the wheel well and (1) 2-Arm Ladder Rack. The ladder rack is to be sanded DA finish and includes amber lights on each end to visually indicate when the rack is in motion. | $28,713 |
| 3120-0245 | Officer side body with full height 24" wide forward and 36" wide rearward compartmentation. Includes (1) 56" wide compartment over the wheel well. | $8,626 |
| 3120-0246 | Officer side body with full height 30" wide forward and 36" wide rearward compartmentation. Includes (1) 56" wide compartment over the wheel well. | $9,228 |
| 3120-0247 | Officer side body with full height 24" wide forward and 50" wide rearward extended compartmentation. Includes (1) 56" wide compartment over the wheel well. | $9,228 |
| 3120-0248 | Officer side body with full height 30" wide forward and 50" wide rearward extended compartmentation. Includes (1) 56" wide compartment over the wheel well. | $9,834 |
| 3120-0249 | Officer side body with full height 36" wide forward and 50" wide rearward extended compartmentation. Includes (1) 56" wide compartment over the wheel well. | $10,476 |
| 3120-0250 | Officer side body with full height 24" wide forward and 50" wide rearward enhanced extended compartmentation. Includes (1) 56" wide compartment over the wheel well. | $9,506 |
| 3120-0251 | Officer side body with full height 30" wide forward and 50" wide rearward enhanced extended compartmentation. Includes (1) 56" wide compartment over the wheel well. | $10,108 |
| 3120-0252 | Officer side body with full height 36" wide forward and 50" wide rearward enhanced extended compartmentation. Includes (1) 56" wide compartment over the wheel well. | $10,752 |
| 3120-0254 | Officer side body with full height 52" wide forward and 52" wide rearward compartmentation. Includes (1) 56" wide compartment over the wheel well. | $12,093 |
| 3120-0255 | Officer side body with full height 36" wide forward and 50" wide rearward compartmentation. Includes (1) 56" wide compartment over the wheel well. | $10,752 |
| 3120-0256 | Officer side body with full height 30" wide forward and 50" wide rearward compartmentation. Includes (1) 56" wide compartment over the wheel well. | $10,108 |
| 3120-0257 | Officer side body with full height 24" wide forward and 50" wide rearward compartmentation. Includes (1) 56" wide compartment over the wheel well. | $9,506 |
| 3120-0258 | Officer 3/4 side body with full height 24" wide forward and 50" wide rearward compartmentation. Includes (1) 56" wide compartment over the wheel well. | $6,272 |
| 3120-0259 | Officer 3/4 side body with full height 30" wide forward and 50" wide rearward compartmentation. Includes (1) 56" wide compartment over the wheel well. | $6,647 |
| 3120-0260 | Officer 3/4 side body with full height 36" wide forward and 50" wide rearward enhanced extended compartmentation. Includes (1) 56" wide compartment over the wheel well. | $7,050 |
| 3120-0261 | Officer half side body with 24" wide forward and 50" wide rearward compartmentation. Includes adjustable ladder tracks. | $5,196 |
| 3120-0262 | Officer half side body with 30" wide forward and 50" wide rearward compartmentation. Includes adjustable ladder tracks. | $5,495 |
| 3120-0263 | Officer half side body with 36" wide forward and 50" wide rearward enhanced extended compartmentation. Includes adjustable ladder tracks. | $5,818 |
| 3120-0264 | Officer side body with full height 24" wide forward and 50" wide rearward compartmentation. Includes (1) 33" wide compartment over the wheel well and (1) Zico Overhead Ladder Rack. | $15,799 |
| 3120-0265 | Officer side body with full height 30" wide forward and 50" wide rearward compartmentation. Includes (1) 33" wide compartment over the wheel well and (1) Zico Overhead Ladder Rack. | $16,400 |
| 3120-0266 | Officer side body with full height 36" wide forward and 50" wide rearward compartmentation. Includes (1) 33" wide compartment over the wheel well and (1) Zico Overhead Ladder Rack. | $17,044 |

| Item No. | Description | |
|---|---|---|
| 3120-0268 | Officer side body with full height 42" wide forward and 56" wide rearward compartmentation. Includes (1) 56" wide compartment over the wheel well. | $11,397 |
| 3120-0269 | Officer side body with full height 36" wide forward and 42" wide rearward compartmentation. Includes (1) 56" wide compartment over the wheel well and one (1)ladder storage tunnel and access door at rear. | $14,103 |
| 3120-0270 | Officer side body with full height 42" wide forward and 56" wide rearward compartmentation. Includes (1) 33" wide compartment over the wheel well and (1) Zico Overhead Ladder Rack. | $17,460 |
| 3120-0271 | Officer 3/4 side body with full height 42" wide forward and 56" wide rearward enhanced extended compartmentation. Includes (1) 56" wide compartment over the wheel well. | $7,484 |
| 3120-0272 | Officer half side body with 42" wide forward and 56" wide rearward enhanced extended compartmentation. Includes adjustable ladder tracks. | $6,163 |
| 3120-0273 | Officer side body with full height 36" wide forward and 50" wide rearward enhanced extended compartmentation. Includes (1) 20" wide compartment over the wheel well and (1) E-One center mounted Overhead Ladder Rack. | $17,044 |
| 3120-0274 | Officer side body with full height 36" wide forward and 50" wide rearward enhanced extended compartmentation. Includes (1) 56" wide compartment over the wheel well. | $11,431 |
| 3120-0275 | Officer side body with full height 42" wide forward and 56" wide rearward enhanced extended compartmentation. Includes (1) 56" wide compartment over the wheel well. | $12,170 |
| 3120-0276 | Officer side body with full height 48" wide forward and 62" wide rearward enhanced extended compartmentation. Includes (1) 56" wide compartment over the wheel well. | $12,962 |
| 3120-0277 | Officer side body with full height 60" wide forward and 56" wide rearward enhanced extended compartmentation. Includes (1) 56" wide compartment over the wheel well. | $13,809 |
| 3120-0278 | Officer side body with full height 36" wide forward and 50" wide rearward enhanced extended compartmentation. Includes (1) 33" wide compartment over the wheel well and (1) Zico Overhead Ladder Rack. | $18,163 |
| 3120-0279 | Officer side body with full height 42" wide forward and 56" wide rearward enhanced extended compartmentation. Includes (1) 33" wide compartment over the wheel well and (1) Zico Overhead Ladder Rack. | $18,902 |
| 3120-0280 | Officer side body with full height 48" wide forward and 62" wide rearward enhanced extended compartmentation. Includes (1) 33" wide compartment over the wheel well and (1) Zico Overhead Ladder Rack. | $19,692 |
| 3120-0281 | Officer side body with full height 60" wide forward and 56" wide rearward enhanced extended compartmentation. Includes (1) 33" wide compartment over the wheel well and (1) Zico Overhead Ladder Rack. | $20,540 |
| 3120-0282 | Officer side body with full height 36" wide forward and 50" wide rearward enhanced extended compartmentation. Includes (1) 56" wide compartment over the wheel well and one (1) storage tunnel. | $14,232 |
| 3120-0283 | Officer side body with full height 42" wide forward and 56" wide rearward enhanced extended compartmentation. Includes (1) 56" wide compartment over the wheel well and one (1) storage tunnel. | $14,972 |
| 3120-0284 | Officer side body with full height 48" wide forward and 62" wide rearward enhanced extended compartmentation. Includes (1) 56" wide compartment over the wheel well and one (1) storage tunnel. | $15,763 |
| 3120-0285 | Officer side body with full height 60" wide forward and 56" wide rearward enhanced extended compartmentation. Includes (1) 56" wide compartment over the wheel well and one (1) storage tunnel. | $16,607 |
| 3120-0286 | Officer 3/4 side body with full height 30" wide forward and 36" wide rearward compartmentation. Includes (1) 56" wide compartment over the wheel well. | $5,544 |
| 3120-0287 | Officer side body with upper and lower compartmentation. Includes 24" wide forward and 36" wide rearward lower compartments and (2) opening upper compartments. Includes (1) Zico Overhead Ladder Rack centered mounted between upper compartments. | $15,348 |
| 3120-0288 | Officer full height side body with upper and lower compartmentation. Includes 42" wide forward and 42" wide rearward lower compartments and (2) opening upper compartments. Includes (1) Zico Overhead Ladder Rack mounted centered between upper compartments. | $17,288 |
| 3120-0290 | Officer side body with full height 30" wide forward and 50" wide rearward enhanced extended compartmentation. Includes (1) 56" wide compartment over the wheel well and one (1) storage tunnel. | $13,546 |
| 3120-0291 | Officer side body with full height 50" wide forward and 50" wide rearward enhanced extended compartmentation. Includes (1) 33" wide compartment over the wheel well and (1) Zico Overhead Ladder Rack. | $18,902 |
| 3120-0292 | Officer side body with full height 56" wide forward and 56" wide rearward enhanced extended compartmentation. Includes (1) 33" wide compartment over the wheel well and (1) Zico Overhead Ladder Rack. | $19,692 |

| Item No. | Description | |
|---|---|---|
| 3120-0293 | Officer side body with full height 62" wide forward and 62" wide rearward enhanced extended compartmentation. Includes (1) 33" wide compartment over the wheel well and (1) Zico Overhead Ladder Rack. | $20,482 |
| 3120-0294 | Officer side body with full height 50" wide forward and 50" wide rearward enhanced extended compartmentation. Includes (1) 56" wide compartment over the wheel well. | $12,170 |
| 3120-0295 | Officer side body with full height 56" wide forward and 56" wide rearward enhanced extended compartmentation. Includes (1) 56" wide compartment over the wheel well. | $12,962 |
| 3120-0296 | Officer side body with full height 62" wide forward and 62" wide rearward enhanced extended compartmentation. Includes (1) 56" wide compartment over the wheel well. | $13,750 |
| 3120-0297 | Officer side body with full height 50" wide forward and 50" wide rearward enhanced extended compartmentation. Includes (1) 56" wide compartment over the wheel well and one (1) ladder storage tunnel and access door at rear. | $14,972 |
| 3120-0298 | Officer side body with full height 56" wide forward and 56" wide rearward enhanced extended compartmentation. Includes (1) 56" wide compartment over the wheel well and one (1) ladder storage tunnel and access door at rear. | $15,762 |
| 3120-0299 | Officer side body with full height 62" wide forward and 62" wide rearward enhanced extended compartmentation. Includes (1) 56" wide compartment over the wheel well and one (1) ladder storage tunnel and access door at rear. | $16,550 |
| 3120-0300 | Officer side body with full height 42" wide forward and 56" wide rearward enhanced extended compartmentation. Includes (1) 56" wide compartment over the wheel well and one (1) storage tunnel and access door at rear. | $14,972 |
| 3120-0301 | Officer side tunnel to hold: [#LOC]. | $614 |
| 3120-0302 | Officer half side body with 42" wide forward and 42" wide rearward compartmentation. | $5,284 |
| 3120-0305 | Stainless steel officer side body with full height 48" wide forward and 48" wide (interior) rearward compartmentation. Includes (1) 60" wide compartment over the wheel well and one (1) ladder storage tunnel and access door at rear with push-button latch. Upper area of ladder storage to have stop at 8' and be used for misc. storage. | $17,076 |
| 3120-0306 | Officer side body with 62" wide full height forward enhanced extended compartment 36" wide half height second forward compartment and 50" wide half height rearward compartmentation. Includes adjustable ladder tracks. | $17,814 |
| 3120-0307 | Officer side body with full height 24" wide forward and 56" wide rearward extended compartmentation. Includes (1) 33" wide compartment over the wheel well and (1) Zico Overhead Ladder Rack. | $16,467 |
| 3120-0308 | Officer side body with full height 24" wide forward and 50" wide rearward enhanced extended compartmentation. Includes (1) 56" wide compartment over the wheel well and one (1) ladder storage tunnel and access door at rear. | $15,579 |
| 3120-0309 | Officer side body with upper and lower compartmentation. Includes 36" wide forward and 50" wide rearward extended lower compartmentation and (2) opening upper compartments with (1) Zico Overhead Ladder Rack centered between the compartments. | $20,263 |
| 3120-0310 | Officer side body with full height 36" wide forward and 36" wide rearward compartmentation. Includes (1) 33" wide compartment over the wheel well one (1) storage tunnel and (1) Zico Overhead Ladder Rack. | $20,098 |
| 3120-0311 | Officer side body with full height 42" wide forward and 42" wide rearward compartmentation. Includes (1) 33" wide compartment over the wheel well one (1) storage tunnel and (1) Zico Overhead Ladder Rack. | $20,837 |
| 3120-0312 | Officer side body with full height 48" wide forward and 48" wide rearward compartmentation. Includes (1) 33" wide compartment over the wheel well one (1) storage tunnel and (1) Zico Overhead Ladder Rack. | $21,628 |
| 3120-0313 | Officer side body with full height 60" wide forward and 42" wide rearward compartmentation. Includes (1) 33" wide compartment over the wheel well one (1) storage tunnel and (1) Zico Overhead Ladder Rack. | $22,475 |
| 3120-0314 | Officer side body with full height 36" wide forward and 50" wide rearward enhanced extended compartmentation. Includes (1) 33" wide compartment over the wheel well one (1) storage tunnel and (1) Zico Overhead Ladder Rack. | $20,962 |
| 3120-0315 | Officer side body with full height 42" wide forward and 56" wide rearward enhanced extended compartmentation. Includes (1) 33" wide compartment over the wheel well one (1) storage tunnel and (1) Zico Overhead Ladder Rack. | $21,704 |
| 3120-0316 | Officer side body with full height 48" wide forward and 62" wide rearward enhanced extended compartmentation. Includes (1) 33" wide compartment over the wheel well (1) Zico Overhead Ladder Rack and one (1) storage tunnel. | $22,494 |
| 3120-0317 | Officer side body with full height 60" wide forward and 56" wide rearward enhanced extended compartmentation. Includes (1) 33" wide compartment over the wheel well one (1) storage tunnel and (1) Zico Overhead Ladder Rack. | $23,341 |

| Item No. | Description | |
|---|---|---|
| 3120-0318 | Officer side body with full height 36" wide forward and 50" wide rearward enhanced extended compartmentation (2008 body design) with (1) 56" wide compartment over the wheel well and one (1) storage tunnel. | $19,396 |
| 3120-0319 | Officer half side body with 20" wide forward and 50" wide rearward extended compartmentation. Includes adjustable ladder tracks. | $4,817 |
| 3120-0320 | Officer side upper body extension. Does not include external upper doors. External framework and platework only. Platework shall be recessed. | $2,130 |
| 3120-0321 | Stainless steel officer side body with full height 30" wide forward and 58" wide rearward enhanced extended compartmentation. Includes (1) 54" wide compartment over the wheel well. | $10,108 |
| 3120-0322 | Stainless steel officer side body with full height 40" wide forward and 58" wide rearward enhanced extended compartmentation. Includes (1) 54" wide compartment over the wheel well. | $11,445 |
| 3120-0323 | Stainless steel officer side body with full height 48" wide forward and 58" wide rearward enhanced extended compartmentation. Includes (1) 54" wide compartment over the wheel well. | $12,182 |
| 3120-0324 | Stainless steel officer side body with full height 30" wide forward and 40" wide rearward compartmentation. Includes (1) 54" wide compartment over the wheel well. | $9,228 |
| 3120-0325 | Stainless steel officer side body with full height 40" wide forward and 40" wide rearward compartmentation. Includes (1) 54" wide compartment over the wheel well. | $10,565 |
| 3120-0326 | Stainless steel officer side body with full height 48" wide forward and 40" wide rearward compartmentation. Includes (1) 54" wide compartment over the wheel well. | $11,302 |
| 3120-0327 | Stainless steel officer half side body with 30" wide forward and 40" wide rearward compartmentation. Includes adjustable ladder tracks. | $4,617 |
| 3120-0328 | Stainless steel officer half side body with 40" wide forward and 40" wide rearward compartmentation. Includes adjustable ladder tracks. | $5,284 |
| 3120-0329 | Stainless steel officer half side body with 48" wide forward and 40" wide rearward compartmentation. Includes adjustable ladder tracks. | $5,654 |
| 3120-0330 | Stainless steel officer 3/4 side body with full height 30" wide forward and 40" wide rearward compartmentation. Includes (1) 54" wide compartment over the wheel well. | $5,771 |
| 3120-0331 | Stainless steel officer 3/4 side body with full height 40" wide forward and 40" wide rearward compartmentation. Includes (1) 54" wide compartment over the wheel well. | $6,604 |
| 3120-0332 | Stainless steel officer 3/4 side body with full height 48" wide forward and 40" wide rearward compartmentation. Includes (1) 54" wide compartment over the wheel well. | $7,067 |
| 3120-0333 | Stainless steel officer side body with full height 30" wide forward and 40" wide rearward compartmentation. Includes (1) 38" wide compartment over the wheel well and (1) Zico Overhead Ladder Rack. | $15,520 |
| 3120-0334 | Stainless steel officer side body with full height 40" wide forward and 40" wide rearward compartmentation. Includes (1) 38" wide compartment over the wheel well and (1) Zico Overhead Ladder Rack. | $16,857 |
| 3120-0335 | Stainless steel officer side body with full height 48" wide forward and 40" wide rearward compartmentation. Includes (1) 38" wide compartment over the wheel well and (1) Zico overhead ladder rack. | $17,594 |
| 3120-0336 | Stainless steel officer side body with full height 30" wide forward and 58" wide rearward enhanced extended compartmentation. Includes (1) 38" wide compartment over the wheel well and (1) Zico Overhead Ladder Rack. | $16,400 |
| 3120-0337 | Stainless steel officer side body with full height 40" wide forward and 58" wide rearward enhanced extended compartmentation. Includes (1) 38" wide compartment over the wheel well and (1) Zico Overhead Ladder Rack. | $17,736 |
| 3120-0338 | Stainless steel officer side body with full height 48" wide forward and 58" wide rearward enhanced extended compartmentation. Includes (1) 38" wide compartment over the wheel well and (1) Zico Overhead Ladder Rack. | $18,474 |
| 3120-0339 | Officer half side stainless steel body with 30" wide forward and 58" wide rearward enhanced extended compartmentation. Includes adjustable ladder tracks. | $5,495 |
| 3120-0340 | Officer half side stainless steel body with 40" wide forward and 58" wide rearward enhanced extended compartmentation. Includes adjustable ladder tracks. | $6,163 |
| 3120-0341 | Officer half side stainless steel body with 48" wide forward and 58" wide rearward enhanced extended compartmentation. Includes adjustable ladder tracks. | $6,534 |
| 3120-0342 | Officer 3/4 side stainless steel body with 30" wide forward and 58" wide rearward enhanced extended compartmentation. Includes (1) 54" wide compartment over the wheel well. | $6,647 |
| 3120-0343 | Officer 3/4 side stainless steel body with 40" wide forward and 58" wide rearward enhanced extended compartmentation. Includes (1) 54" wide compartment over the wheel well. | $7,484 |
| 3120-0344 | Officer 3/4 side stainless steel body with 48" wide forward and 58" wide rearward enhanced extended compartmentation. Includes (1) 54" wide compartment over the wheel well. | $7,947 |
| 3120-0346 | Officer half side body with (2) forward compartments (48" and 30" wide) and one rearward area for locating of side tank dump. | $4,811 |
| 3120-0347 | Officer half side body with (2) forward compartments (48" and 30" wide) and (1) rearward compartment (24"). | $5,654 |

| Item No. | Description | |
|---|---|---|
| 3120-0348 | Officer 3/4 side body with (2) lower forward compartments (48" and 30" wide) (3) upper compartments (54") and one lower rearward area for locating of side tank dump. | $6,653 |
| 3120-0349 | Officer 3/4 side body with (2) lower forward compartments (48" and 30" wide) (3) upper compartments (54") and (1) lower rearward compartment (24"). | $7,498 |
| 3120-0350 | Officer full height side body with (2) lower forward compartments (48" and 30" wide) (3) upper compartments (54") and one lower rearward area for locating of side tank dump. | $8,496 |
| 3120-0351 | Officer full height side body with (2) lower forward compartments (48" and 30" wide) (3) upper compartments (54") and (1) lower rearward compartment (24"). | $9,342 |
| 3120-0352 | Officer full height side body with (2) full height rescue style forward compartments (48" and 30" wide) (1) upper compartment (61" and offset rearward of the rack opening) and one lower rearward area for locating of side tank dump. | $8,496 |
| 3120-0353 | Officer full height side body with (2) full height rescue style forward compartments (48" and 30" wide) (1) upper compartment (61" and offset rearward of the rack opening) and (1) lower rearward compartment (24"). | $9,342 |
| 3120-0356 | Officer full height side body with (2) lower forward compartments (48" and 30" wide) (3) upper compartments (54") with rear compartment face access door for portable tank storage and one lower rearward area for locating of side tank dump. | $9,839 |
| 3120-0357 | Officer full height side body with (2) lower forward compartments (48" and 30" wide) (3) upper compartments (54") with rear compartment face access door for portable tank storage and (1) lower rearward compartment (24"). | $10,683 |
| 3120-0359 | Officer side body with full height 24" wide forward and 50" wide rearward enhanced extended compartmentation. Includes (1) 56" wide compartment over the wheel well and one (1) storage tunnel. | $12,859 |
| 3120-0363 | Officer full height side body with (2) full height rescue style forward compartments (48" and 30" wide) (2) upper compartments (40" wide) and one lower rearward area for locating of side tank dump. | $8,496 |
| 3120-0364 | Officer full height side body with (2) full height rescue style forward compartments (48" and 30" wide) (2) upper compartment (40" wide) and (1) lower rearward compartment (24"). | $9,342 |
| 3120-0366 | Stainless steel officer side body with full height 48" wide forward and 48" wide rearward compartmentation with reduced upper depth. Includes (1) 54" wide compartment over the wheel well and (1) storage tunnel. | $14,894 |
| 3120-0367 | Stainless steel officer side body with full height 54" wide forward and 54" wide rearward compartmentation with reduced upper depth. Includes (1) 54" wide compartment over the wheel well and (1) storage tunnel. | $16,088 |
| 3120-0368 | Stainless steel officer side body with full height 60" wide forward and 60" wide rearward compartmentation with reduced upper depth. Includes (1) 54" wide compartment over the wheel well and (1) storage tunnel. | $17,280 |
| 3120-0369 | Stainless steel officer side body with full height 48" wide forward and 48" wide rearward compartmentation. Includes 54" wide compartment over the wheel well and a dual arm hydraulic overhead ladder rack. | $12,093 |
| 3120-0370 | Stainless steel officer side body with full height 54" wide forward and 54" wide rearward compartmentation. Includes 54" wide compartment over the wheel well and a dual arm hydraulic overhead ladder rack. | $13,061 |
| 3120-0371 | Stainless steel officer side body with full height 60" wide forward and 60" wide rearward compartmentation. Includes 54" wide compartment over the wheel well and a dual arm hydraulic overhead ladder rack. | $14,029 |
| 3120-0377 | Officer half side tandem body with 30" wide forward and 30" wide rearward compartmentation. | $7,218 |
| 3120-0378 | Officer half side tandem body with 42" wide forward and 42" wide rearward compartmentation. | $7,885 |
| 3120-0379 | Officer half side tandem body with 60" wide forward and 54" wide rearward compartmentation. | $8,652 |
| 3120-0380 | Officer 3/4 side tandem body with full height 30" wide forward and 30" wide rearward compartmentation. Includes (2) 51.5" wide compartments over the wheel well. | $8,359 |
| 3120-0381 | Officer 3/4 side tandem body with full height 42" wide forward and 42" wide rearward compartmentation. Includes (2) 51.5" wide compartments over the wheel well. | $9,191 |
| 3120-0382 | Officer 3/4 side tandem body with full height 60" wide forward and 54" wide rearward compartmentation. Includes (2) 51.5" wide compartments over the wheel well. | $10,147 |
| 3120-0383 | Officer side tandem body with upper and lower compartmentation. Includes 30" wide forward and 30" wide rearward compartments and (4) opening upper compartments. | $12,246 |
| 3120-0384 | Officer side tandem body with upper and lower compartmentation. Includes 42" wide forward and 42" wide rearward compartments and (4) opening upper compartments. | $13,584 |
| 3120-0385 | Officer side tandem body with upper and lower compartmentation. Includes 60" wide forward and 54" wide rearward compartments and (4) opening upper compartments. | $15,142 |
| 3120-0386 | Officer side tandem body with upper and lower compartmentation. Includes 30" wide forward and 30" wide rearward compartments and (4) opening upper compartments. Includes overhead rack opening centered between upper compartments. | $12,734 |

| Item No. | Description | |
|---|---|---|
| 3120-0387 | Officer side tandem body with upper and lower compartmentation. Includes 42" wide forward and 42" wide rearward compartments and (4) opening upper compartments. Includes overhead rack opening centered between upper compartments. | $14,125 |
| 3120-0388 | Officer side tandem body with upper and lower compartmentation. Includes 60" wide forward and 54" wide rearward compartments and (4) opening upper compartments. Includes overhead rack opening centered between upper compartments. | $15,747 |
| 3120-0389 | Officer side tandem body with full height 30" wide forward and 30" wide rearward compartmentation. Includes (2) 51.5" wide compartments over the wheel well. | $11,817 |
| 3120-0390 | Officer side tandem body with full height 42" wide forward and 42" wide rearward compartmentation. Includes (2) 51.5" wide compartments over the wheel well. | $13,153 |
| 3120-0391 | Officer side tandem body with full height 60" wide forward and 54" wide rearward compartmentation. Includes (2) 51.5" wide compartments over the wheel well. | $14,680 |
| 3120-0392 | Officer side tandem body with full height 30" wide forward and 30" wide rearward compartmentation. Includes (2) 42" wide compartments over the wheel well and overhead rack opening centered between upper compartments. | $12,287 |
| 3120-0393 | Officer side tandem body with full height 42" wide forward and 42" wide rearward compartmentation. Includes (2) 42" wide compartments over the wheel well and overhead rack opening centered between upper compartments.- | $13,677 |
| 3120-0394 | Officer side tandem body with full height 60" wide forward and 54" wide rearward compartmentation. Includes (2) 42" wide compartments over the wheel well and overhead rack opening centered between upper compartments. | $15,268 |
| 3120-0401 | Officer side body with full height 42" wide forward and 50" wide rearward compartmentation. Includes (1) 33" wide compartment over the wheel well and (1) Zico Overhead Ladder Rack. | $17,253 |
| 3120-0402 | Officer half side tandem body with with 42" wide forward and one rearward area for locating of side tank dump rearward of the wheel well. | $8,162 |
| 3120-0403 | Officer side body with full height 60" wide forward and 56" wide rearward compartmentation. Includes (1) 56" wide compartment over the wheel well and one (1) storage tunnel located behind the upper (3) compartment back walls. | $15,743 |
| 3120-0404 | Officer half side body with 36" wide forward and 31" wide rearward compartmentation. Includes adjustable ladder tracks mounted to outside of hosebed 3x3 and to run full height for max adjustments.. | $4,941 |
| 3120-0405 | Officer side body with full height 46" wide forward and 56" wide rearward enhanced extended compartmentation. Includes (1) 56" wide compartment over the wheel well. | $12,962 |
| 3120-0406 | Officer side body with full height 50" wide forward and 50" wide rearward compartmentation. Includes (1) 33" wide compartment over the wheel well and (1) Zico Overhead Ladder Rack. | $19,674 |
| 3120-0407 | Officer side body with full height 42" wide forward and 56" wide rearward enhanced extended compartmentation. Includes (1) 56" wide compartment over the wheel well. Rescue Pumper style compartments for use with low hosebed. | $13,825 |
| 3120-0410 | Officer side body with full height 60" wide forward and 62" wide rearward enhanced extended compartmentation. Includes (1) 56" wide compartment over the wheel well. | $14,231 |
| 3120-0411 | Officer side body with full height 42" wide forward and 56" wide rearward enhanced extended compartmentation. Includes (1) 56" wide compartment over the wheel well. | $12,721 |
| 3120-0412 | 2-Arm Ladder Rack on Officer Side. The ladder rack includes amber lights on each end to visually indicate when the rack is in motion. Restricts the top folding step (if optioned) from closing completely. Includes mounting bracket (matching rear compartment face or compartment wrap finish) for components mounted on rear compartment face including the stop/tail/turn lights. | $15,259 |
| 3120-0413 | Officer side body with full height 60" wide forward and 56" wide rearward compartmentation. Includes (1) 33" wide compartment over the wheel well and (1) Zico Overhead Ladder Rack. | $19,674 |
| 3120-0414 | Officer half side body with (2) forward compartments (39" and 39" wide) and (1) rearward compartment (24"). | $6,759 |
| 3120-0415 | Officer full height side body with upper and lower compartmentation. Includes 48" wide forward and 62" wide enhanced extended rearward lower compartments and (3) opening upper compartments and (1) Zico Overhead Ladder Rack. Upper compartments to be (1) 56" wide forward Overhead ladder rack (2) 45" wide compartments rearward of rack. | $19,517 |
| 3120-0416 | Officer full height side body with upper and lower compartmentation. Includes 60" wide forward and 42" wide rearward lower compartments and (3) opening upper compartments and (1) Zico Overhead Ladder Rack. | $18,498 |
| 3120-0418 | Officer 3/4 side body with full height 42" wide forward and 56" wide rearward enhanced extended compartmentation. Includes (1) 56" wide compartment over the wheel well. Compartments raised 8" due to roll-up doors to allow for addtional storage room. | $11,391 |
| 3120-0420 | Officer side body with full height 36" wide forward and 45" wide rearward compartmentation. Includes (1) 56" wide compartment over the wheel well. | $11,347 |

| Item No. | Description | |
|---|---|---|
| 3120-0421 | Officer side diamond plate roof top compartment. Includes (2) hinged lift-up access doors with turn latches and grab handle(s) and (1) vertical hinged access door at the rear with push button latch to be. Each lid to have (1) bracket mounted LED light and to be wired to door ajar indicator in cab. | $2,200 |
| 3120-0423 | Officer side body with full height 32" wide forward and 50" wide rearward compartmentation. Includes (1) 56" wide compartment over the wheel well and one (1) storage tunnel beside the water tank. | $10,306 |
| 3120-0424 | Officer side body with full height 54" wide forward and 48" wide rearward compartmentation. Includes (1) 56" wide compartment over the wheel well and one (1) storage tunnel located behind the upper (3) compartment back walls. | $14,931 |
| 3120-0425 | Officer side body with half height 36" wide forward (above fuel fill area) and full height 50" wide rearward enhanced extended compartmentation. Includes (1) 56" wide compartment over the wheel well. Area below forward compartment will be for mounting of fuel fill. | $10,752 |
| 3120-0426 | Officer side body with full height 26" and 56" wide forward compartments and 56" wide rearward compartmentation. Includes (1) 56" wide compartment over the wheel well and one (1) storage tunnel. | $17,056 |
| 3120-0427 | Officer side body with full height 60" wide front and 54" wide rear compartments. Includes (1) 60" wide compartment over the wheel well and one (1) storage tunnel located behind reduced upper depth compartments. SS eMAX only. | $19,205 |
| 3120-0428 | Officer side body with full height 36" wide forward and 50" wide rearward enhanced extended compartmentation. Includes (1) 33" wide compartment over the wheel well and (1) Zico Overhead Ladder Rack. Area below forward compartment will be for mounting of fuel fill. | $18,163 |
| 3120-0429 | Officer side tandem body with upper and lower compartmentation. Includes 60" wide forward and 54" wide rearward compartments and (1) opening forward upper compartment with painted panels rearward. | $16,205 |
| 3120-0437 | Rear aluminum smooth plate painted job color vertical hinged door on officer side roof top compartments. Includes thumb latch and wiring for door ajar switch. | $211 |
| 3120-0438 | Stainless steel officer side body with full height 36" wide forward and 48" wide rearward compartmentation. Includes 54" wide compartment over the wheel well and a dual arm hydraulic overhead ladder rack. | $12,140 |
| 3120-0439 | Officer side body with full height 26" and 56" wide forward and 56" wide rearward compartmentation. Includes (1) 33" wide compartment over the wheel well and (1) Zico Overhead Ladder Rack. | $21,015 |
| 3120-0441 | Officer half side body with 36" wide forward and 56" wide rearward enhanced extended compartmentation. Includes adjustable ladder tracks. | $6,163 |
| 3120-0442 | Officer side tandem body with upper and lower compartmentation. Includes 30" wide forward and 54" wide rearward compartments and (4) opening upper compartments. Includes overhead rack opening centered between upper compartments. Includes offseting upper compartments forward due to deck gun location and access panel on upper rear compartment face to deck gun piping. | $14,166 |
| 3120-0444 | Officer half side body with 36" wide forward and 56" wide rearward enhanced extended compartmentation. Includes adjustable ladder tracks. 8" compartment raise to allow for taller opening with roll-up doors and smooth plate above wheel well area. | $6,644 |
| 3120-0445 | Officer side tandem body with 60" wide forward and 54" wide rearward compartmentation. Forward compartment to be full height rearward to be half height. | $10,662 |
| 3120-0446 | Officer side diamond plate roof top compartment. Includes smooth plate painted vertical hinged access door at the rear with push button latch to be wired to door ajar indicator in cab. | $1,528 |
| 3120-0447 | Officer side body with full height 54" wide forward and 36" wide rearward compartmentation. Includes (1) 33" wide compartment over the wheel well and (1) Zico Overhead Ladder Rack. | $18,437 |
| 3120-0448 | Officer side roof top assembly. Does not include external upper doors or internal platework. External framework and platework only. | $1,535 |
| 3120-0449 | Officer side body with full height 60" wide forward and 56" wide rearward compartmentation. Includes (1) 56" wide compartment over the wheel well. | $12,941 |
| 3120-0450 | Officer half side body with 36" wide forward and 36" wide rearward compartmentation. Includes 30 degree rear body angle for greater angle of departure. | $4,951 |
| 3120-0453 | Officer 3/4 side tandem body with full height 42" wide forward and 59" wide rearward compartmentation. Includes (2) 51.5" wide compartments over the wheel well. | $10,337 |
| 3120-0456 | Officer side body with full height 26" and 56" wide forward compartments and 56" wide rearward compartmentation. Includes (1) 56" wide compartment over the wheel well. | $14,290 |
| 3120-0457 | Stainless steel officer side body with full height 48" wide forward and 70" wide rearward enhanced extended compartmentation. Includes (1) 54" wide compartment over the wheel well. | $13,097 |
| 3120-0458 | Officer high side stainless steel body with 60" front and 60" rear. Five compartments tandem axle. For use with single arm overhead ladder rack. | $17,371 |

| Item No. | Description | |
|---|---|---|
| 3120-0460 | Officer side tandem body with upper and lower compartmentation. Includes 30" wide forward and 54" wide rearward compartments and (4) opening upper compartments. Includes overhead rack opening centered between upper compartments. Includes offseting upper compartments forward due to deck gun location and access panel on upper rear compartment face to deck gun piping. | $14,166 |
| 3120-0461 | 2-arm ladder rack on officer side. The ladder rack includes Whelen 500 series TIR6 amber lights on each end to visually indicate when the rack is in motion. Restricts the top folding step (if optioned) from closing completely. Includes mounting bracket (if required matching rear compartment face or compartment wrap finish) for components mounted on rear compartment face. | $15,790 |
| 3120-0462 | Officer side roof top compartment contents: (2) 6" x 10' hard suction hoses (not included) stored horizontally. Includes stop bracket rearward of hard suction hoses. | $1,044 |
| 3120-0463 | Officer side diamond plate roof top compartment. Includes vertical hinged access door at the rear with a "D-Ring" latch handle to be wired to door ajar indicator in cab. .188 material | $1,551 |
| 3120-0464 | Stainless steel officer half side body with 36" wide front and 40" wide rear and 60" wide fender panel. | $5,388 |
| 3120-0465 | Officer side tandem body with full height (1) 60" wide forward and (1) 60" wide rearward compartmentation. For use with Rear Mount pump. | $18,174 |
| 3120-0466 | Officer side body with upper and lower compartmentation. Includes 36" wide forward and 36" wide rearward lower compartments and (3) opening upper compartments with (1) 33" wide compartment over the wheel well and (1) Zico Overhead Ladder Rack. | $16,585 |
| 3120-0468 | Stainless steel officer side body with full height 48" wide forward and 58" wide rearward enhanced extended compartmentation. Includes (1) 60" wide compartment over the wheel well. | $12,639 |
| 3120-0469 | Stainless steel officer side body with full height 54" wide forward and 54" wide rearward compartmentation with custom size reduced upper depth. Includes (1) 54" wide compartment over the wheel well and (1) custom size storage tunnel. | $16,628 |
| 3120-0470 | Stainless steel officer side body with full height 48" wide forward and 54" wide rearward compartmentation. Includes (1) 54" wide compartment over the wheel well. | $12,182 |
| 3120-0471 | Officer side tandem body with (2) 34" wide forward and 54" wide rearward compartmentation. (1) forward compartment to be full height (1) forward and rearward to be half height. | $11,278 |
| 3120-0472 | Officer 3/4 side body with full height 48" wide forward and 62" wide rearward enhanced extended compartmentation. Includes (1) 56" wide compartment over the wheel well and one (1) storage tunnel. | $14,521 |
| 3120-0473 | (2) officer side roof top compartments with removable floors and extra width to inboard side. Includes hinged raised compartment lids with turn latches grab handle(s) and gas shock hold open and drain line(s) ran to below body. Each lid to have (1) bracket mounted LED light and to be wired to door ajar indicator in cab. | $6,545 |
| 3120-0474 | Rear aluminum smooth plated painted [#COL] vertically hinged door on officer side roof top compartments. Includes thumb latch and wiring for door ajar switch. | $211 |
| 3120-0475 | Stainless steel officer side body with full height 60" wide forward and 60" wide rearward compartmentation. Includes (1) 54" wide compartment over the wheel well. Upper compartment depth only 12" IPO standard 14" due to 3-section and roof ladders in tunnel. | $13,850 |
| 3120-0476 | Officer side body with full height 60" wide front and 54" wide rear compartments. Includes (1) 44" wide compartment over the wheel well and one (1) Zico overhead ladder rack. SS eMAX only. | $24,002 |
| 3120-0477 | (2) Officer side roof top compartments. Includes hinged raised aluminum smooth plate with black Scorpion coating (IPOS diamond plate) compartment lids with turn latches and grab handle(s). Each lid to have (1) bracket mounted LED light and to be wired to door ajar indicator in cab. | $2,961 |
| 3120-0478 | Officer side tandem body with 60" wide full height forward compartment. Rearward of the forward compartment to 3/4 height with 54" wide rearward compartmentation. Includes (2) 51.5" wide compartments over the wheel well. | $12,096 |
| 3120-0479 | Officer side body with full height/full depth 30/60" wide front and 54" wide rear compartments. Includes (1) 60" wide compartment over the wheel well. SS eMAX only. | $17,434 |
| 3120-0480 | Officer side body with full height 30/60" wide front and 54" wide rear compartments. Includes (1) 44" wide compartment over the wheel well with Zico overhead ladder rack. SS eMAX only. | $25,639 |
| 3120-0481 | Officer side body with full height 30/60" wide front and 54" wide rear compartments. Includes (1) 60" wide compartment over the wheel well and one (1) storage tunnel located behind reduced upper depth compartments. SS eMAX only. | $20,809 |
| 3120-0482 | Officer side body with full height 50" wide forward and 42" wide rearward compartmentation. Includes (1) 33" wide compartment over the wheel well (1) Zico overhead ladder rack. Rear perimeter or body raised 3" for improved departure angle. | $18,437 |
| 3120-0483 | Officer full height side body with upper and lower compartmentation. Includes 42" wide forward and 56" wide rearward lower enhanced compartmentation and (3) opening upper compartments. For use with ladder storage in the hosebed. | $11,445 |

| Item No. | Description | |
|---|---|---|
| 3120-0485 | Stainless steel officer half side body with 30" wide front and 40" wide rear and 60" wide fender panel. For use with suicide hinged R1 door (if applicable). | $5,388 |
| 3120-0486 | Vertical and horizontal partitions located in officer side roof top compartment. Vertical partition located rearward of electric cord reel and horizontal partition located over DOT bottles. Floor to be provided above the DOT bottles to use remaining area above. | $1,255 |
| 3120-0487 | Officer side body with full height 48" wide forward and 56" wide rearward enhanced extended compartmentation. Includes (1) 56" wide compartment over the wheel well. | $12,962 |
| 3120-0488 | Vertical door stop for storage tunnel door. | $122 |
| 3120-0489 | Officer side roof top compartment contents: (1) 10' hard suction hose (not included) stored horizontal. Includes stop bracket rearward of hard suction hoses and Nylatron compartment flooring. | $526 |
| 3120-0490 | (2) officer side roof top compartments with extra width to inboard side. Includes hinged raised compartment lids with turn latches grab handle(s) and gas shock hold open and drain line(s) ran to below body. Each lid to have (1) bracket mounted LED light and to be wired to door ajar indicator in cab. Compartment lid construction shall be aluminum smooth plate IPO diamond plate painted Black Scorpion (rough finish). | $5,646 |
| 3120-0491 | Officer side body with upper and lower compartmentation. Includes 42" wide forward and 42" wide rearward lower compartments (3) opening upper compartments. Includes (1) 33" wide compartment over the wheel well and (1) Zico Overhead Ladder Rack. Smooth plate compartment top painted black durabak. | $18,093 |
| 3120-0492 | Officer 3/4 side body with (3) full height rescue style (2) forward compartments (48" and 30" wide) and (1) rearward compartment (24"). Includes (1) 56" wide compartment over the wheel well. | $7,945 |
| 3120-0494 | Officer side roof top compartment. Includes vertically hinged access door at the rear with push button latch to be wired to door ajar indicator in cab. | $1,528 |
| 3120-0495 | (2) officer side roof top compartments with extra width to inboard side. Includes hinged raised compartment lids with turn latches grab handle(s) and gas shock hold open and drain line(s) ran to below body. Each lid to have (2) bracket mounted LED lights and to be wired to door ajar indicator in cab. | $5,340 |
| 3120-0496 | Officer side tandem body with full height 30" wide forward and 30" wide rearward compartmentation. Includes (2) 42" wide compartments over the wheel well and overhead rack opening centered between upper compartments. | $13,074 |
| 3120-0498 | Stainless steel officer side body with full height 48" wide forward and 48" wide rearward compartmentation. Includes (1) 54" wide compartment over the wheel well. | $11,940 |
| 3120-0500 | Officer side body with full height 24" wide forward and 36" wide rearward compartmentation. Includes (1) 56" wide compartment over the wheel well. Rear bottom corner of truck will be angled 30 degrees for a greater rear angle of departure. | $9,827 |
| 3120-0501 | Officer side body with full height 36" wide forward and 62" wide rearward enhanced extended compartmentation. Includes (1) 56" wide compartment over the wheel well and one (1) storage tunnel. | $14,511 |
| 3120-0502 | Officer full height side body with 36" wide forward and 48" wide rearward compartmentation. Includes (2) 28.5" wide compartments over the wheel well for the installation of Zico Overhead Ladder Rack and one forward area for side tank dump. For use with custom chassis only. | $9,818 |
| 3120-0503 | Officer side tandem body with upper and lower compartmentation. Includes 30" wide forward full height and 30" wide low rearward compartments and (2) opening upper compartments. Includes offseting upper compartments forward due to deck gun location and access panel on upper rear compartment face to deck gun piping. | $13,592 |
| 3120-0504 | Officer side body with full height 48" wide forward and 48" wide rearward compartmentation. Includes (1) 33" wide compartment over the wheel well and (1) Zico Overhead Ladder Rack. Ladder rack controls to be located on officer side rear compartment face above tail lights. Compartment material to be 5083-H321. | $19,668 |
| 3120-0505 | Officer 3/4 height side body with 42" wide and 20" wide forward compartments and 42" wide rearward compartment. Includes (1) 56" wide compartments over the wheel well. For use with custom chassis only. | $7,902 |
| 3120-0508 | Officer side ERV body with full height 37" forward and 52" rearward. Includes (1) 56" wide compartment over the wheel well. Includes (2) roof top compartments with hinged raised lids with thumb latches grab handle(s) and gas shock hold open and drain line(s) ran to below body.Eack lid to have (1) bracket mounted LED light and to be wired to door ajar indicator in cab. | $18,785 |
| 3120-0509 | Officer side body with full height 24" wide forward and 36" wide rearward compartmentation. Includes (1) 56" wide compartment over the wheel well. | $9,827 |
| 3120-0510 | Officer half side body with 38" wide forward and 56" wide rearward compartment. Includes adjustable ladder tracks. | $6,471 |
| 3120-0511 | The rear body corner on the right side to extend full height and a smooth plate inner panel. | $190 |
| 3120-0512 | Notch compartment R2 in upper back wall rearward due to the 5" rear suction and provide a cover box. | $327 |

| Item No. | Description | |
|---|---|---|
| 3120-0513 | (2) Officer side roof top compartments. Includes hinged raised compartment lids with thumb latches and grab handle(s). Each lid to have (1) bracket mounted LED light and to be wired to door ajar indicator in cab. | $2,626 |
| 3120-0514 | Officer half side tandem body with (2)41" wide forward and (2)32" wide rearward compartmentation. | $11,687 |
| 3120-0515 | Stainless steel officer side body with full height 48" wide forward and 54" wide rearward compartmentation with reduced upper depth. Includes (1) 60" wide compartment over the wheel well. | $11,758 |
| 3120-0516 | Stainless steel officer side body with half height 40" wide forward and 40" wide rearward compartmentation. | $9,588 |
| 3120-0517 | Stainless steel officer side body with full height 40" wide forward and 48" wide rearward compartmentation. Includes (1) 60" wide compartment over the wheel well. | $11,302 |
| 3120-0519 | Officer side roof top compartment contents: (1) 12'-14'+ hard suction hose (not included) stored horizontal. Includes Nylatron compartment flooring. Length of capacity depends on body configuration. | $612 |
| 3120-0520 | Officer side body with full height 48" wide forward and 62" wide rearward compartmentation. Includes (1) 56" wide compartment over the wheel well. | $12,182 |
| 3120-0521 | Stainless steel officer side body with full height 48" wide forward and 58" wide rearward enhanced extended compartmentation. Includes (1) 60" wide compartment over the wheel well. | $12,396 |
| 3120-0522 | Officer 3/4 side body with full height 36" wide forward and 42" wide rearward compartmentation. Includes (1) 56" wide compartment over the wheel well. | $7,342 |
| 3120-0524 | Officer side body with full height 54" wide forward and 48" wide rearward compartmentation. Includes (1) 56" wide compartment over the wheel well. | $12,131 |
| 3120-0526 | (2) officer side roof top compartments. Includes hinged raised compartment lids with turn latches and grab handle(s). The rear compartment to include (1) vertically hinged access door at the rear with push button latch for access to (1) 6" X10' hard suction tube. Each lid to have (1) bracket mounted LED light and to be wired to door ajar indicator in cab. | $2,721 |
| 3120-0527 | 2-arm ladder rack on officer side. Modified pivot position to allow the ladder rack to deploy at 48" to the center of ladders as loaded or less from ground level. The ladder rack includes amber lights on each end to visually indicate when the rack is in motion. Restricts the top folding step (if optioned) from closing completely. Includes mounting bracket (if required matching rear compartment face or compartment wrap finish) for components mounted on rear compartment face. | $12,541 |
| 3120-0528 | Officer full height side body with 20" wide and 42" wide forward compartments and 42" wide rearward compartment. Includes (1) 56" wide compartments over the wheel well. For use with custom chassis only. | $9,818 |
| 3120-0529 | Officer side body with full height 42" wide forward and 56" wide rearward compartmentation. Includes (1) 56" wide compartment over the wheel well. | $12,721 |
| 3120-0530 | Officer high side stainless steel tanker body with 52" front and 52" rear rescue style R2 and R3 modified for one-arm Zico overhead ladder rack. Four compartments tandem axle. Ladder rack not included requires adding sales code 3365-0185-199. | $19,506 |
| 3120-0531 | Officer side body with full height full depth 60" wide front and 54" wide rear compartments. Includes (1) 44" wide compartment over the wheel well and one (1) Zico overhead ladder rack. SS eMAX only. | $24,207 |
| 3120-0532 | Double hard suction storage rack: Two (2) hard suction hose storage racks shall be provided on the driver side of the body. The racks shall be positioned with one (1) rack located beside the other. | $1,044 |
| 3120-0533 | Stainless steel officer side special tall body with full height 40" wide forward and 58" wide rearward enhanced extended compartmentation. Includes (1) 54" wide compartment over the wheel well. | $12,182 |
| 3120-0535 | Officer side body with full height 60" wide forward and 62" wide rearward enhanced extended compartmentation. Includes (1) 33" wide compartment over the wheel well one (1) storage tunnel and (1) Zico Overhead Ladder Rack. | $23,764 |
| 3120-0536 | Officer side body with full height 50" wide forward and 36" wide rearward compartmentation. Includes (1) 56" wide compartment over the wheel well. Rear perimeter or body raised 4" for improved departure angle. | $11,293 |
| 3120-0538 | Officer half side stainless steel body with 40" wide forward and 58" wide rearward enhanced extended compartmentation. Includes adjustable ladder tracks and 60" wide rear fender. | $6,287 |
| 3120-0539 | (2) officer side roof top compartments. Includes hinged raised compartment lids with slam style D-ring latches and no grab handles. Each lid to have (1) bracket mounted LED light and to be wired to door ajar indicator in cab. | $2,751 |
| 3120-0540 | (2) officer side roof top compartments. Includes hinged raised compartment lids with turn latches and grab handle(s). Each lid to have (1) bracket mounted LED light and to be wired to door ajar indicator in cab. Includes fixed floor with hard suction storage below accessible through hinged rear panel access door with bent D-ring latch. | $3,455 |

| Item No. | Description | |
|---|---|---|
| 3120-0541 | Officer side body with full height 60" wide forward and 42" wide rearward compartmentation. Includes (1) 33" wide compartment over the wheel well and (1) Zico Overhead Ladder Rack. | $18,036 |
| 3120-0542 | Officer side body with full height 42" wide forward and 42" wide rearward compartmentation. Includes (1) 56" wide compartment over the wheel well. | $11,093 |
| 3120-0543 | Officer half side stainless steel body with 40" wide forward and 58" wide rearward extended compartmentation. Includes adjustable ladder tracks and 60" wide rear fender. | $6,342 |
| 3120-0544 | Officer half side body with 42" wide forward and 50" wide rearward enhanced extended compartmentation. Includes adjustable ladder tracks. | $6,003 |
| 3120-0545 | Officer half side body with 24" wide forward and 50" wide rearward enhanced extended compartmentation. | $5,196 |
| 3120-0546 | Officer side smooth plate roof top compartment and painted black Durabak. Includes vertically hinged smooth plate access door painted job color at the rear with push button latch to be wired to door ajar indicator in cab. | $1,910 |
| 3120-0547 | (2) officer side roof top compartments with extra width to inboard side. Includes hinged raised compartment lids with turn latches grab handle(s) and gas shock hold open and drain line(s) ran to below body. Each lid to have (1) Amdor strip LED light and to be wired to door ajar indicator in cab. | $5,993 |
| 3120-0548 | Officer full height side body with (3) full height rescue style forward compartments (48" and 30" wide) and (1) rearward compartment (24" wide) plus (1) upper compartment over w/well(33" wide and offset rearward of the rack opening). | $9,342 |
| 3120-0550 | Officer side tandem body with (1) 36" wide and (1) 20" wide forward and 54" wide rearward compartmentation. (1) forward compartment to be full height (1) forward and rearward to be half height. | $9,517 |
| 3120-0552 | Officer Full height forward compartment and 3/4 side rear of R1 tandem body with 42" wide forward and 42" wide rearward compartmentation. Includes (2) 51.5" wide compartments over the wheel well. Lowered W/Well for extra compt heigth. Side Dump Valves between Tandems N/A. | $13,822 |
| 3120-0553 | (2) officer side roof top compartments. Includes hinged raised compartment lids with turn latches and grab handle(s). Each lid to have (3) bracket mounted EION LED lightS and to be wired to door ajar indicator in cab. | $2,626 |
| 3120-0554 | Stainless steel officer half side body with 30" wide front and 40" wide rear and 60" wide fender panel. | $5,139 |
| 3120-0555 | Officer side tandem body with upper and lower compartmentation. Includes 60" wide full height forward and 54" wide half height rearward compartments and (1) opening forward upper compartment with painted panels rearward. | $16,736 |
| 3120-0556 | Officer side rear mount pumper body with full height 48" wide forward and 60" wide rearward compartmentation. Includes (1) 56" wide compartment over the wheel well and provisions to rear mount pump panel in rearward side compartment. | $12,445 |
| 3120-0557 | Officer side body with full height 60" wide forward and 48" wide rearward compartmentation. Includes (1) 56" wide compartment over the wheel well. | $12,941 |
| 3120-0558 | (2) officer side roof top compartments for instillation of DOT/ASME bottles. Includes hinged raised compartment lids with turn latches and grab handle(s). Each lid to have (1) bracket mounted LED light and to be wired to door ajar indicator in cab. | $2,626 |
| 3120-0559 | Officer side body with full height 42" wide forward and 42" wide rearward compartmentation. Includes (1) 56" wide compartment over the wheel well and one (1) storage tunnel beside the water tank. | $13,546 |
| 3120-0560 | Officer side body with full height 34" and 48" wide forward and 56" wide rearward compartmentation. Includes (1) 33" wide compartment over the wheel well and (1) Zico Overhead Ladder Rack. | $21,530 |
| 3120-0561 | Officer side body with full height 30" wide forward and 44" wide rearward compartmentation. Includes (1) 56" wide compartment over the wheel well. | $10,752 |
| 3120-0562 | Officer side body with full height 42" and 40" wide forward compartments and 56" wide rearward compartmentation. Includes (1) 56" wide compartment over the wheel well. Side Mount eMAX only. | $14,804 |
| 3120-0563 | Zico hydraulic drop-down ladder rack (LAS-XT) with 12 inches additional drop. Includes spacer brackets with ladder rack controller located on the officer side pump panel. | $7,442 |
| 3120-0564 | Stainless steel officer side body with full height/full depth 60" wide forward and 60" wide rearward compartmentation. Includes 60" wide compartment over the wheel well and a 2-arm hydraulic overhead ladder rack. | $14,520 |
| 3120-0565 | Officer side body with full height 26" and 50" wide forward compts 56" wide over wheel compt and 52" wide rearward compt. Includes slide-back rear side compt for engine access and one (1) storage tunnel. eMAX HS only. | $27,339 |
| 3120-0567 | Officer side body with full height 26" and 50" wide forward compts 33" wide compartment over the wheel well Zico Overhead Ladder Rack and 52" wide rearward compt. Includes slide-back rear side compt for engine access. eMAX HS only. | $31,298 |

| Item No. | Description | |
|---|---|---|
| 3120-0568 | Officer side rear mount rescue pumper body with full height 38" wide forward and 42" wide rearward compartmentation with officer side ladder storage tunnel. Includes (1) 56" wide compartment over the wheel well and 30 degree angled rear body for improved angle of departure. | $14,972 |
| 3120-0569 | Stainless steel officer side body with full height full depth 48" wide forward and 40" wide rearward compartmentation. Includes (1) 54" wide compartment over the wheel well. | $11,940 |
| 3120-0570 | Officer full height body side with (1) 48" wide Full Height forward compartment (1) 30" wide lower forward compartment adjacent to w/well (2) upper compartments (57" wide each) the rearward upper having a rear compartment face access door for portable tank storage and (1) lower rearward compartment (24") to rear of the w/well. | $11,196 |
| 3120-0571 | Stainless steel officer side body with full height 54" wide forward and 48" wide rearward compartmentation. Includes (1) 60" wide compartment over the wheel well. | $12,897 |
| 3120-0572 | Officer side body with full height 60" wide front and 54" wide rear compartments. Includes (1) 60" wide compartment over the wheel well and one (1) storage tunnel located behind reduced upper depth compartments. SS eMAX only. | $19,205 |
| 3120-0573 | (2) side low profile stepped interior roof top compartments with extra width to inboard side. Includes hinged raised compartment lids with turn latchesgas shock hold opens and drain line(s) ran to below body. Each lid to have (1) bracket mounted LED light and to be wired to door ajar indicator in cab. Lids shall be without grab handles for lowered OAH and shall have a stepped interior. | $5,355 |
| 3120-0574 | Officer half side body with 42" wide forward and 36" wide rearward compartmentation. Includes adjustable ladder tracks. | $5,162 |
| 3120-0575 | Stainless steel officer side body with full height 40" wide forward and 58" wide rearward enhanced extended compartmentation. Includes (1) 60" wide compartment over the wheel well. | $13,700 |
| 3120-0576 | Officer side rear mount rescue pumper body with full height 62" wide forward and 42" wide rearward compartmentation with officer side ladder storage tunnel. Includes (1) 56" wide compartment over the wheel well and 30 degree angled rear body for improved angle of departure. | $16,950 |
| 3120-0577 | Officer side rear mount rescue pumper body with full height 62" wide forward and 42" wide rearward compartmentation. Includes (1) 56" wide compartment over the wheel well and 30 degree angled rear body for improved angle of departure. | $14,148 |
| 3120-0578 | Officer side body with 3/4 height 36" wide forward and 56" wide rearward compartmentation. Includes (1) 56" wide x 20" high compartment over the wheel well. | $8,312 |
| 3120-0579 | Officer side diamond plate roof top compartment. Includes smooth plate painted vertical hinged access door at the rear with D-Ring latch to be wired to door ajar indicator in cab. .125 material | $1,553 |
| 3120-0581 | Stainless steel officer half side body with 40" wide forward 40" wide rear and a 60" wide fender panel. Includes adjustable ladder tracks. | $5,520 |
| 3120-0582 | Officer side body with full height full depth 30/60" wide front and 54" wide rear compartments. Includes (1) 44" wide compartment over the wheel well with Zico overhead ladder rack. SS eMAX only. | $26,153 |
| 3120-0584 | Officer half side body with 30" wide forward and 60" wide rearward extended compartmentation. Includes adjustable ladder tracks. | $6,317 |
| 3120-0585 | Stainless steel officer half side body with 30" wide front and 40" wide rear and 60" wide fender panel. For use with suicide hinged R1 door. | $5,150 |
| 3120-0586 | (2) officer side roof top compartments. Includes hinged raised compartment lids with turn latches and grab handle(s). Each lid to have (1) bracket mounted ROM V4 LED strip light and to be wired to door ajar indicator in cab. | $2,983 |
| 3120-0587 | Officer side body with full height 68" wide forward and 56" wide rearward compartmentation. Includes (1) 56" wide compartment over the wheel well and one (1) storage tunnel located behind the upper (3) compartment back walls. | $16,293 |
| 3120-0588 | Stainless steel officer side body with full height 60" wide forward and 60" wide rearward compartmentation with reduced upper depth. Includes (1) 60" wide compartment over the wheel well and (1) storage tunnel. | $17,956 |
| 3120-0589 | Officer full height side body with (3) full height rescue style forward compartments (48" and 30" wide) and (1) rearward compartment (24" wide) (1) upper compartment (56" wide). | $9,342 |
| 3120-0590 | Officer side rear mount rescue pumper body with full height 38" wide forward and 42" wide rearward compartmentation. Includes (1) 56" wide compartment over the wheel well and 30 degree angled rear body for improved angle of departure. | $12,170 |
| 3120-0591 | (2) officer side roof top compartments with extra width to inboard side. Compartment top and lids to be smooth plate painted black Durabak. Includes hinged raised compartment lids with turn latches grab handle(s) and gas shock hold open and drain line(s) ran to below body. Each lid to have (1) bracket mounted LED light and to be wired to door ajar indicator in cab. | $6,558 |
| 3120-0592 | Stainless steel officer side body with full height 48" wide forward and 48" wide rearward compartmentation. Includes (1) 60" wide compartment over the wheel well and a storage tunnel. | $15,948 |

| Item No. | Description | |
|---|---|---|
| 3120-0594 | (2) officer side roof top compartments with extra width to inboard side. Includes hinged raised compartment lids with turn latches grab handle(s) and gas shock hold open and drain line(s) ran to below body. Each lid to have (1) bracket mounted ROM V4 LED strip light and to be wired to door ajar indicator in cab. | $5,604 |
| 3120-0595 | Officer side body with full height 30in. wide forward and 62in. wide rearward enhanced extended compartmentation. Includes (1) 56in. wide compartment over the wheel well and a cavity (using space from R1) between R1 and R2 for vertical exhaust to exit on outer compartment top just forward of wheel well. | $15,105 |
| 3120-0597 | Officer side body with full height 60" wide forward and 56" wide rearward compartmentation. Includes (1) 56" wide compartment over the wheel well and one (1) storage tunnel located behind the upper (3) compartment back walls. Rear perimeter or body raised 3" for improved departure angle. | $15,743 |
| 3120-0598 | Officer side body with full height 30" wide forward and 50" wide rearward enhanced extended compartmentation. Includes (1) 33" wide compartment over the wheel well and (1) Zico Overhead Ladder Rack. | $17,477 |
| 3120-0599 | Officer full height side body with 20" wide and 42" wide forward compartments and 42" wide rearward compartment. Includes (1) 56" wide compartments over the wheel well. For use with 30" high lower compt height only. | $9,818 |
| 3120-0600 | Officer half side body with 44" wide forward and 36" wide rearward compartmentation and 28" high opening. Includes adjustable ladder tracks. | $7,058 |
| 3120-0601 | Officer side body with full height 30" wide forward and 50" wide rearward compartmentation. Includes (1) 33" wide compartment over the wheel well and (1) Zico Overhead Ladder Rack. Rescue Pumper individual style compartments. | $17,477 |
| 3120-0602 | Officer side body with full height 36" wide forward and 50" wide rearward compartmentation. Includes (1) 33" wide compartment over the wheel well and (1) Zico Overhead Ladder Rack. Rescue Pumper individual style compartments. | $18,348 |
| 3120-0605 | Officer side body with upper and lower compartmentation. Includes 42" wide forward and 42" wide rearward lower compartments (3) opening upper compartments. Includes (1) 33" wide compartment over the wheel well and (1) Zico Overhead Ladder Rack. | $17,189 |
| 3120-0606 | Officer side body with full height 60" wide forward and 56" wide rearward compartmentation. Includes (1) 56" wide compartment over the wheel well. Top Mount eMAX Only. | $12,941 |
| 3120-0607 | Officer 3/4 side tandem body with 3/4 full height 42" wide forward (2) 51.5" wide compartments over the wheel well and a 3/4 full height 42" wide rearward compartment. Additionally there shall be a 3/4 full height 20" wide beavertail compartment openings. | $10,070 |
| 3120-0608 | Officer full height side body (FOR 4X4 Chassis) with 30" high lower compartment height (2) lower forward compartments (34" and 28" wide) ahead of wheel well (1) one lower rearward compartment 24" wide and (3) upper compartments (48.67" wide x 32" high opening) each transverse front to rear. | $9,342 |
| 3120-0609 | Stainless steel officer side body with full height 40" wide forward and 58" wide rearward enhanced extended compartmentation. Includes (1) 41" wide compartment over the wheel well and (1) Zico Overhead Ladder Rack. | $18,436 |
| 3120-0610 | Officer side body with full height 60" wide front and 54" wide rear compartments. Includes (1) 60" wide compartment over the wheel well for use with 2-arm ladder rack. SS eMAX only. | $24,002 |
| 3120-0611 | (2) officer side roof top compartments. Includes hinged raised compartment lids with turn latches and grab handle(s). Each lid to have (1) Amdor LED strip light and to be wired to door ajar indicator in cab. | $3,372 |
| 3120-0612 | Officer side tandem body with upper and lower compartmentation. Includes 48" wide full height forward and 48" wide rearward compartments and (3) opening upper compartments. Includes offseting upper compartments forward due to deck gun location and access panel on upper rear compartment face to deck gun piping. | $15,695 |
| 3120-0613 | Officer 3/4 side stainless steel body with 40" wide forward and 58" wide rearward compartmentation. Includes (1) 60" wide compartment over the wheel well. | $7,781 |
| 3120-0614 | Officer side ERV style roof top compartment contents: (2) 6" x 10' hard suction hoses (not included) stored vertical. Includes vertical partition around hard suction hoses. | $1,044 |
| 3120-0615 | Officer side rear mount pumper body with full height 54" wide forward and 60" wide rearward compartmentation. Includes (1) 56" wide compartment over the wheel well and one (1) storage tunnel and access door at rear. | $21,774 |
| 3120-0616 | Officer side body with full height 60" wide forward and 52" wide rearward compartmentation. Includes (1) 33" wide compartment over the wheel well and (1) Zico Overhead Ladder Rack. Includes slide-back rear side compt for engine access. HS only. | $30,008 |
| 3120-0617 | Stainless steel officer half side body with 35" wide front and 40" wide rear and 60" wide fender panel. | $5,340 |
| 3120-0618 | Officer side rear mount rescue pumper body with full height 24" wide forward and 42" wide rearward compartmentation. Includes (1) 56" wide compartment over the wheel well and 30 degree angled rear body for improved angle of departure. | $11,181 |

| Item No. | Description | |
|---|---|---|
| 3120-0619 | Officer 3/4 side body with (2) lower forward compartments (48" and 30" wide) (3) upper compartments (55") and (1) lower rearward compartment (28"). | $7,636 |
| 3120-0620 | Two (2) officer side roof top compartments with extra width to inboard side. Includes hinged raised compartment lids with one (1) L handle style 1/4 turn latche in the center of the compartment top and two (2) grab handle(s) on each side of the L handle and gas shock hold open and drain line(s) ran to below body. Each lid to have (1) Amdor LED strip light and to be wired to door ajar indicator in cab. | $6,012 |
| 3120-0623 | Officer side tandem body with upper and lower compartmentation. Includes 60" wide lower forward and 54" wide lower rearward compartments and (1) forward upper compartment with standard hose bed side rearward. | $16,736 |
| 3120-0625 | Officer side body with upper and lower compartmentation. Includes full height 24" wide forward 30" high by 38" wide lower rear and 34" high by 38" wide upper rear compartmentation. Includes (1)33" wide compartment over the wheel well and (1) Zico Overhead Ladder Rack. | $15,799 |
| 3120-0626 | Stainless steel officer side body with full height 54" wide forward and 54" wide rearward compartmentation with reduced upper depth. Includes (1) 60" wide compartment over the wheel well and (1) storage tunnel. | $16,570 |
| 3120-0627 | Officer side body with full height 30" wide forward and 52" wide rearward enhanced extended compartmentation. Includes (1) 56" wide compartment over the wheel well. | $10,752 |
| 3120-0628 | Officer half side body with (2) forward compartments (42" and 20" wide) and (1) rearward compartment (42"). The compartment opening height to be 30" IPO 34". For use with custom chassis only. | $6,059 |
| 3120-0630 | Stainless steel officer side body with full height 48" wide front and 58" rear with reduced upper depth for "T" tank. Includes 60" wide compartment over rear wheels. Upper compartments to be 15" deep. | $13,121 |
| 3120-0631 | (2) officer side roof top compartments for foam pails. Includes hinged compartment lids with turn latches and grab handle(s). Each compartment shall include LED lighting and to be wired to door ajar indicator in cab. | $2,626 |
| 3120-0632 | Stainless steel officer half side body with 48" wide front and 40" wide rear and 60" wide fender panel. Includes adjustable ladder tracks. | $5,892 |
| 3120-0633 | Stainless steel officer side body with full height/full depth 54" wide forward and 54" wide rearward compartmentation. Includes (1) 60" wide compartment over the wheel well. | $16,088 |
| 3120-0634 | Stainless steel officer 3/4 side body with full height 40" wide forward and 40" wide rearward compartmentation. Includes (1) 60" wide compartment over the wheel well. | $6,901 |
| 3120-0636 | Officer side tandem body with full height 60" wide forward and 54" wide rearward compartmentation. Includes (2) 51.5" wide compartments over the wheel well. Wheel wells and lower compartment height to lowered 4" over standard. (Pumper/Rescue Pumper Height). | $14,680 |
| 3120-0639 | Officer side roof top compartment contents: (2) 6" x 10' hard suction hoses (not included) stored vertically. Includes horizontal partition between the hard suction hoses. NO stop for hoses. | $1,044 |
| 3120-0640 | Officer side rear mount pumper body with two full height 48" wide forward compartments and 42" wide rearward compartment. Includes (1) 56" wide compartment over the wheel well and 30 degree angled rear body for improved angle of departure. | $17,684 |
| 3120-0641 | Officer half side tandem body with 48" wide forward and 42" wide rearward compartmentation. | $8,652 |
| 3120-0642 | Officer side body with full height 30" wide forward and 50" wide rearward compartmentation. Includes (1) 56" wide compartment over the wheel well. | $10,108 |
| 3120-0643 | Officer half side stainless steel body with 30" wide forward and 58" wide rearward extended compartmentation. Includes adjustable ladder tracks and 60" wide rear fender. | $6,342 |
| 3120-0644 | Officer side body with full height 60in. wide forward and 42in. wide rearward compartments. Includes (1) 56in. wide compartment over the wheel well. Side Mount e-MAX only. | $12,131 |
| 3120-0645 | Officer full height side body with 31" wide and 31" wide forward compartments and 42" wide rearward compartment. Includes (1) 56" wide compartments over the wheel well. | $9,818 |
| 3120-0647 | Rear aluminum smooth plate painted job color vertical hinged door on roof top compartment. Includes D-ring latch and wiring for door ajar switch. | $213 |
| 3120-0648 | Roof top compartment contents: (1) 6in x 10ft hard suction hose (not included) stored in the lower area of roof top compartment. Includes stop bracket rear ward of hard suction hose if applicable to body length and partition surround over the hard suction hoses to accommodate storage area above and in front of the stored hose. Floor to include nylon pad as applicable for ease of deployment on scene. | $673 |
| 3120-0651 | Stainless steel officer side body with full height 48" wide forward and 54" wide rearward compartment with reduced upper depth. Includes (1) 60" wide compartment over the wheel well and (1) storage tunnel. | $16,088 |
| 3120-0652 | Officer side body with full height 30" and 60" wide forward compartments and 54" wide rearward compartmentation. Includes (1) 60" wide compartment over the wheel well. Side mount SS eMAX only. | $17,434 |

| Item No. | Description | |
|---|---|---|
| 3120-0653 | Officer side body with special full height 23" wide forward and 50" wide rearward compartmentation. Includes (1) 50" wide compartment over the wheel well and (1) Zico Overhead Ladder Rack with special provision for ladder rack to be lowered so as to meet customer requirements in the down position. | $19,745 |
| 3120-0654 | Officer side diamond plate roof top compartment. Includes smooth plate painted vertical hinged access door at the rear with D-ring style latch to be wired to door ajar indicator in cab. | $1,528 |
| 3120-0655 | Officer side rear mount rescue pumper body with full height 38" wide forward and 42" wide rearward compartmentation. Includes (1) 33" wide compartment over the wheel well (1) Zico Overhead Ladder Rack and 30 degree angled rear body for improved angle of departure. | $18,900 |
| 3120-0656 | Officer half side stainless steel body with 30" wide forward and 46" wide rearward compartmentation. Includes full height adjustable ladder tracks and 60" wide fender panel. | $5,495 |
| 3120-0657 | Stainless steel 96" wide officer side body with full height 48" wide forward and 48" wide rearward compartmentation. Includes (1) 54" wide compartment over the wheel well. | $12,063 |
| 3120-0658 | The front body corner on the right side to extend full height and have a smooth plate inner panel. | $190 |
| 3120-0660 | Officer side body with full height 30" wide forward and 52" wide rearward enhanced extended compartmentation. Includes (1) 33" wide compartment over the wheel well and (1) Zico Overhead Ladder Rack. | $16,857 |
| 3120-0663 | Stainless steel officer side body with full height 36" wide forward and 48" wide rearward compartmentation. Includes (1) 60" wide compartment over the wheel well and a ladder storage tunnel. | $12,614 |
| 3120-0664 | Stainless steel officer side body with full height 44" wide forward and 60" wide rearward compartmentation. Includes (1) 54" wide compartment over the wheel well and ladder storage tunnel. | $12,614 |
| 3120-0665 | (3) Officer side roof top compartments with extra width to inboard side. (1) open generator compartment and (2) hinged raised compartments with lids and turn latches grab handle(s) and gas shock hold open and drain line(s) ran to below body. Each lid to have (1) bracket mounted LED light and to be wired to door ajar indicator in cab. | $5,499 |
| 3120-0666 | Officer half side tandem body with 54" wide forward and 48" wide rearward compartmentation. Compartment height 30" pumper style. Side dumps not available. | $8,652 |
| 3120-0667 | Officer side body with full height 34" and 56" wide forward compartments and 56" wide rearward compartmentation. Includes (1) 56" wide compartment over the wheel well. | $14,879 |
| 3120-0668 | Stainless steel officer side body with full height full depth 48" wide forward and 58" wide rearward enhanced extended compartmentation. Includes (1) 60" wide compartment over the wheel well. | $13,700 |
| 3120-0669 | Officer side tandem body with full height 48" wide forward and 48" wide rearward compartmentation. Includes (2) 51.5" wide compartments over the wheel well. | $13,920 |
| 3120-0670 | Officer half side stainless steel body with 30" wide forward and 46" wide rearward compartmentation. Includes full height adjustable ladder tracks and 66" wide fender panel. | $5,495 |
| 3120-0671 | Officer side body with full height 60" wide forward and 46" wide rearward compartmentation. Includes (1) 56" wide compartment over the wheel well and one (1) storage tunnel located behind the upper (3) compartment back walls. | $15,165 |
| 3120-0672 | Officer side rear mount rescue pumper body with full height 24" wide forward and 42" wide rearward compartmentation with officer side ladder storage tunnel. Includes (1) 56" wide compartment over the wheel well and 30 degree angled rear body for improved angle of departure. | $13,983 |
| 3120-0673 | Stainless steel officer side body with full height 48" wide front and 48" rear compartments. Includes 60" wide compartment over the rear wheels. | $12,128 |
| 3120-0674 | Officer 3/4 side body with full height 60" wide forward and 42" wide rearward compartmentation. Includes (1) 56" wide and 20" high compartment over the wheel well. | $9,451 |
| 3120-0675 | Officer side tandem body with two forward compartments ahead of the rear wheels and one rear compartment behind rear wheels. The forward front compartment to be 38" wide and full height the rearward front compartment to be 24" wide and half height. The single rear to be a half height 60" wide compartment. | $14,680 |
| 3120-0676 | Stainless steel officer side body with half height 35" wide forward and 48" wide rearward compartmentation. Include 60" wide wheel well. Includes adjustable ladder tracks. | $5,495 |
| 3120-0677 | Officer side body with full height 36" wide forward and 56" wide rearward enhanced extended compartmentation. Includes (1) 56" wide compartment over the wheel well. | $11,074 |
| 3120-0678 | Officer side tandem body with upper and lower compartmentation. Includes 66" wide half height forward and 60" wide half height rearward compartments and (1) opening rearward upper compartment to rear of compartment top mounted Portable Tank or Equipment Storage. | $17,057 |
| 3120-0679 | Officer 3/4 side body with upper and lower compartmentation. Includes 42" wide forward and 48" wide rearward lower compartments and (2) opening upper compartments. | $7,266 |

| Item No. | Description | |
|---|---|---|
| 3120-0681 | Two (2) officer side roof top compartments with extra width to inboard side. Includes hinged raised compartment lids with one (1) ' L' handle style 1/4 turn latch in the center of the compartment top two (2) grab handle(s) on each side of the' L' handle gas shock hold open and drain line(s) ran to below body. Each lid to have (1) Amdor LED strip light and to be wired to door ajar indicator in cab. | $6,012 |
| 3120-0682 | Officer side body with full height 35" wide forward and 47" wide rearward compartmentation. Includes (1) 56" wide compartment over the wheel well and one (1) storage tunnel. | $16,220 |
| 3120-0683 | (3) officer side roof top compartments with extra width to inboard side (20"/96"/15"). Includes hinged raised compartment lids with thumb latches grab handle(s) and gas shock hold open and drain line(s) ran to below body. Each lid to have (1) bracket mounted LED light and to be wired to door ajar indicator in cab. Compartments shall be stepped at inboard side for a 26" deep section approximately 8.5" wide in order to stow a stokes basket. | $6,136 |
| 3120-0685 | Officer side body with full height 42" wide forward and 56" wide rearward enhanced extended compartmentation. Includes (1) 33" wide compartment over the wheel well and (1) Zico Overhead Ladder Rack. | $17,736 |
| 3120-0686 | Officer side body with full height 36" wide forward and 56" wide rearward enhanced extended compartmentation. Includes (1) 56" wide compartment over the wheel well and one (1) ladder storage tunnel and access door at rear. | $13,876 |
| 3120-0689 | Officer side roof top assembly. Does not include external upper doors. External framework plate work and internal floors only. | $1,535 |
| 3120-0690 | Officer side body with upper and lower compartmentation. Includes 42" wide forward and 56" wide rearward lower compartments and (3) opening upper compartments. | $12,136 |
| 3120-0691 | Officer side body with full height 42 in. wide forward and 56in. wide rearward enhanced extended compartment. Includes (1) 56" wide compartment over the wheel well and one storage tunnel. | $14,972 |
| 3120-0692 | Vertical partitions located in officer side roof top compartment. Vertical partition located 3" forward of electric cord reel and a adjustable divider shall be installed forward of the partition. The divider shall span from front to rear and be adjustable left to right. The use of Unistrut or equal materials shall provide for adjustability as required for divider. The divider plate shall be 3/16" smooth aluminum. | $699 |
| 3120-0693 | Roof top compartment modification to provide storage for a stokes basket accessible from the top. Includes partition wall to separate the stokes basket storage area from the remaining usable area of the compartment. Modify roof top compartment lids as needed. | $636 |
| 3120-0695 | Stainless steel officer side body with full height/full depth 60" wide forward and 60" wide rearward compartmentation. Includes (1) 60" wide compartment over the wheel well. | $17,876 |
| 3120-0696 | Officer side body with full height 48" wide forward and 56" wide rearward compartmentation. Includes (1) 56" wide compartment over the wheel well and one (1) storage tunnel located behind the upper (3) compartment back walls. A cavity between R1 and R2 for vertical exhaust to exit on outer compartment top just forward of wheel well. | $17,260 |
| 3120-0697 | Officer side body with full height 54" wide forward and 48" wide rearward compartmentation. Includes (1) 33" wide compartment over the wheel well and (1) Zico Overhead Ladder Rack. | $19,056 |
| 3120-0699 | Officer side body with full height 40" wide forward and 56" wide rearward compartmentation. Includes (1) 56" wide compartment over the wheel well. | $12,093 |
| 3120-0700 | Officer side body with full height 42" wide forward and 56" wide rearward enhanced extended compartmentation. Includes (1) 33" wide compartment over the wheel well and (1) Zico Overhead Ladder Rack. | $17,736 |
| 3120-0701 | Stainless steel officer side body with modified (63" high from bottom to compt top) full height full depth 48" wide forward and 48" wide rearward compartmentation. Includes (1) 60" wide compartment over the wheel well. | $14,963 |
| 3120-0702 | Officer side roof top compartment contents: (1) 6" x 10' hard suction hose (not included) stored in lower rearward area of the roof top storage with Nylatron compartment flooring. Includes surround forward and above hard suction hose to allow for additional storage in remaining available roof top storage compartments accessible from top lift doors. | $690 |
| 3120-0703 | Officer side body with lower 48in wide forward and 48in wide rearward lower compartments. Includes: one (1) storage tunnel behind upper area inboard for ladders with an outer body additional storage tunnel accessible from the rear of the body for storage of four (4) 6in. diameter x minimum 12ft. hard suction hoses with rocker style or folding style handles. Storage chutes for hard tubes to be full body length trays and nylatron without tube stops so department can order custom full length hoses after delivery. | $15,854 |
| 3120-0704 | Officer side body with full height 42" wide forward and 56" wide rearward compartmentation. Includes (1) 56" wide compartment over the wheel well. | $11,397 |
| 3120-0705 | Officer side rear mount rescue pumper body with full height 24" wide forward and 42" wide rearward compartmentation. Includes (1) 33" wide compartment over the wheel well (1) Zico Overhead Ladder Rack and 30 degree angled rear body for improved angle of departure. | $17,901 |

| Item No. | Description | |
|---|---|---|
| 3120-0707 | Officer side body with full height 50" wide forward and 42" wide rearward compartmentation. Includes (1) 56" wide compartment over the wheel well and one (1) storage tunnel located behind the upper (3) compartment back walls. Rear perimeter or body raised 3" for improved departure angle. | $14,832 |
| 3120-0708 | Officer side body with upper and lower compartmentation. Includes 24" wide forward and 36" wide rearward lower compartments and (2) opening upper compartments. For use with 94"(96" with rubrail) wide body configuration. | $9,057 |
| 3120-0710 | (2) officer side roof top compartments with extra width to inboard side. Includes hinged raised compartment lids with D-Ring latches no grab handle(s) and gas shock hold open and drain line(s) ran to below body. Each lid to have (1) bracket mounted ROM V4 LED strip light and to be wired to door ajar indicator in cab. | $5,795 |
| 3120-0714 | Officer side body with full height 42" wide forward and 56" wide rearward extended compartmentation. Includes (1) 56" wide compartment over the wheel well and one (1) storage tunnel. | $14,972 |
| 3125-0001 | Mid-Engine module with 58" wide opening. Forward area of module to have double stacked double crosslays to hold up to 200' of 2.0" DJ (each). | $9,501 |
| 3125-0002 | Mid engine side access doors (PR) painted job color. Painted surface does not include expanded metal inserts. | $1,427 |
| 3125-0003 | Mid engine side access doors (PR) diamond plate. | $1,242 |
| 3125-0005 | eMAX Forward body configuration - SM. Includes a lower double preconnect storage area upper transverse storage area rack in upper storage area for (2) backboards (vertical stored offset forward - sleeve each side of center pump access) center front pump access doors and removable center floor in upper area. | $2,504 |
| 3125-0007 | eMAX crosswalk module. Includes raised floor walkway storage compartments with push button latches running boards (1) dual lighted LED folding step each side and access handrails mounted on the eMAX front body extension. | $1,586 |
| 3125-0008 | eMAX Forward body configuration - SM. Includes a lower double preconnect storage area upper preconnect storage area sleeve in upper storage area for (2) backboards (vertical stored offset forward - sleeve is removable for center pump access) center front pump access doors and removable center floor in upper area. | $2,504 |
| 3125-0009 | eMAX Forward body configuration - TM. Includes a lower double preconnect storage area provision for top mount pump operator's panel and center front pump access door. | $2,504 |
| 3125-0010 | eMAX Forward body configuration. Includes a lower double preconnect storage area upper transverse storage area with lift-up ptd door rack in upper storage area for (2) backboards (vertically stored offset forward - sleeve each side of center pump access) center front pump access doors removable center floor in upper area and upper storage pan. | $2,724 |
| 3125-0011 | eMAX Forward body configuration - SM. Includes a lower transverse storage area for (2) backboards and (1) stokes basket with boxed out style access door (wired to door ajar). Center area to be sleeved for pump access with center front pump access door and removable center floor area. | $2,285 |
| 3125-0013 | SS eMAX forward body configuration - SM. Includes a lower double preconnect storage area upper preconnect storage area sleeve in upper storage area for (2) backboards (vertically stored offset forward - sleeve is removable for center pump access) center front pump access doors and removable center floor in upper area. | $3,055 |
| 3125-0014 | eMAX Forward body configuration. Includes a lower transverse storage area rack in upper storage area for (2) backboards (vertically stored offset forward - sleeve each side of center pump access) upper transverse storage area center front pump access doors removable center floor in upper and lower areas and upper storage pan (pan to extend into forward body area and be wider to the rear). | $2,504 |
| 3125-0015 | eMAX Forward body configuration. Includes a rack in lower storage area for (2) backboards (vertically stored offset forward - sleeve each side of center pump access) lower transverse storage area upper transverse storage area center front pump access doors removable center floor in upper and lower areas and upper storage pan (pan to extend into forward body area and be wider to the rear). | $2,504 |
| 3125-0016 | eMAX Forward body configuration - SM. Includes a lower double preconnect area upper transverse storage area rack in upper storage area for (1) 17' Little Giant ladder (vertically stored offset forward - sleeve each side of center pump access) center front pump access doors and removable center floor in upper area. | $2,759 |

| Item No. | Description | |
|---|---|---|
| 3125-0017 | eMAX Forward body configuration - SM. Includes a transverse storage area above pump panels that include (2) fixed shelves going full length (left to right) of the transverse compartment. The lower most shelf shall be approximately 11" from the floor. It shall accommodate a door on each side approximately 10" in height. The doors shall be mounted below the lower most shelf and shall be recessed approximately 3" from each side. The smooth aluminum doors shall be 3/16" thick include a thumb latch and have a vertical hinge mounted to the rear side. The second shelf shall be mounted approximately 18" above the lower shelf. The lower area floor shall be constructed from 1/8" smooth aluminum plate and be bolted in to facilitate pump system servicing. The outboard floors of the upper area shall be constructed from 1/8" smooth aluminum plate. The center upper floor shall be 1/8" smooth aluminum plate and removable to provide easy access to the pump manifold and valves. | $2,759 |
| 3125-0018 | eMAX Forward body configuration - SM. Includes a lower double preconnect storage area extruded boxed out upper transverse storage area with horizontal hinged door each side with push button latch and pull strap rack in upper storage area for (2) backboards (vertical stored offset forward - sleeve each side of center pump access) and (1) stokes basket (offset rearward) - 84.5" long x 24" high x 7.5" deep center front pump access doors removable center floor in upper area. | $2,836 |
| 3125-0019 | SS eMAX forward body configuration - SM. Includes a lower double preconnect storage area sleeve in upper storage area for backboards or other transverse items with lift-up access door each side (stored offset forward - sleeve is removable for center pump access) center front pump access doors and removable center floor in upper area. | $3,055 |
| 3125-0020 | eMAX Forward body configuration - TME. Includes a lower double preconnect storage area upper transverse storage area rack in upper storage area for (2) backboards (vertically stored offset forward - sleeve each side of center pump access) center front pump access doors and removable center floor in upper area. | $2,504 |
| 3125-0021 | An eMAX forward body configuration - SM. Includes a lower double preconnect storage area upper transverse storage area rack in upper storage area for (1) 13' Little Giant Ladder (vertically stored offset forward sleeve each side of center pump access) and (1) Ferno Model 71-S two piece stokes basket (vertically stored) center front pump access doors with D-Ring latch and removable center floor in upper area. | $2,939 |
| 3125-0022 | eMAX Forward body configuration - SM. Includes a lower double preconnect storage area upper transverse storage area with a lift up door (each side) to include pull strap push button latch wired to door ajar. Center front pump access doors and removable center floor in upper area. | $2,504 |
| 3125-0025 | eMAX Forward body configuration - SM. Includes a lower double preconnect storage area upper preconnect storage area sleeve in upper storage area for (2) backboards (vertically stored offset forward - sleeve is removable for center pump access) center front pump access doors and removable center floor in upper area. Upper logo panel and storage door to be smooth plate for paint color or zolotone application. | $2,504 |
| 3125-0027 | SS eMAX forward body configuration - SM. Includes a lower double preconnect storage area upper preconnect storage area (rearward) open storage area for dealer supplied hydraulic system (offset forward) center front pump access doors and removable center floor in upper area. Bolt on ventilated brushed stainless steel cover plates on both ends of forward open storage area. | $3,055 |
| 3125-0028 | eMAX Forward body configuration - SM. Includes a lower double preconnect storage area upper transverse storage area with D-Ring latch each door rack in upper storage area for (2) backboards (vertically stored offset forward - sleeve each side of center pump access) center front pump access doors and removable center floor in upper area. | $2,662 |
| 3125-0029 | eMAX Forward body configuration - SM. Includes a lower double preconnect storage area upper preconnect storage area and upper forward area for dry lay. Center front pump access doors and removable center floor in upper area.Pump module opening 23" wide for use with roll-up doors. | $3,021 |
| 3125-0030 | Includes a lower double preconnect storage area sleeve in upper storage area for long handle tools and/or other transverse items with lift-up access door each side- (sleeve is removable for center pump access) center front pump access doors and removable center floor in upper area. Upper area recessed at depth of front eMAX body storage pan. | $2,797 |
| 3125-0031 | eMAX Forward body configuration for use with a (2) arm ladder rack. - SM. Includes a lower double preconnect storage area upper transverse storage area and deck gun piping access center front pump access doors and removable center floor in upper area. | $3,018 |
| 3125-0032 | eMAX Forward body configuration - SM. Includes a lower double preconnect storage area extruded boxed out upper preconnect/storage area with horizontal hinged door each side with push button latch and pull strap rack in upper storage area for (1) stokes basket (offset forward) - 84.5" long x 24" high x 7.5" deep and (1) preconnect area (offset rearward) center front pump access doors removable center floor in upper area. | $2,836 |

| Item No. | Description | |
|---|---|---|
| 3125-0033 | eMAX Forward body configuration for use with a (2) arm ladder rack and raised speedlays for 4X4 application. - SM. Includes a lower double preconnect storage area upper transverse storage area and deck gun piping access center front pump access doors and removable center floor in upper area. | $3,018 |
| 3125-0034 | eMAX Forward full width body configuration - SM. Includes a lower double preconnect storage area upper full usable body width transverse storage area rack in upper storage area for (2) backboards (vertical stored offset forward and misc. storage rearward - sleeve each side of center pump access) center front pump access doors and removable center floor in upper area. e-MAX forward pump module to match body height. | $6,391 |
| 3125-0036 | eMAX Forward body configuration - SM. Includes a lower double preconnect storage area upper transverse storage area an adjustable storage rack in upper storage area for (2) backboards (or similar items vertically stored offset forward - sleeve each side of center pump access) with single preconnect storage rearward center front pump access doors and removable center floor in upper area. | $2,619 |
| 3125-0037 | SS eMAX forward body configuration - SM. Includes a lower double preconnect storage area sleeve in upper storage area for (1) stokes basket or other transverse items with boxed out style lift-up access doors (wired to door ajar) each side (sleeve is removable for center pump access) center front pump access doors and removable center floor in upper area. | $3,268 |
| 3125-0038 | eMAX Forward Full Body Width configuration - SM. Includes a transverse double preconnect storage area one single lower and one single upper with a bolt-on partition to keep storage trays from sliding foroward. Both Trays shall accommodate a full height roll-up door on each side of body. Module also includes a center front pump access door and a removable center floor in the upper area. | $6,391 |
| 3125-0039 | eMAX Forward body configuration - SM. Includes an extruded boxed out lower double preconnect storage area upper transverse storage area sleeve in upper transverse storage area with provision for roll-up door each side sleeve each side of center pump access) and (1) stokes basket (forward) - 86" long x 24.5" high x 8" deep center front pump access doors removable center floor in upper area. | $2,836 |
| 3125-0040 | eMAX Forward body configuration - SM. Includes a lower double preconnect storage area extruded boxed out upper preconnect/storage area with horizontal hinged door each side with D-ring latch and pull strap rack in upper storage area for (1) stokes basket (offset forward) - 84.5" long x 24" high x 7.5" deep and (1) preconnect area (offset rearward) center front pump access doors removable center floor in upper area. | $2,836 |
| 3125-0041 | eMAX Forward body configuration - SM. Includes a lower double preconnect storage area upper transverse storage area rack in upper storage area for (2) backboards (horizontally stored - sleeve each side of center pump access) center front pump access doors and removable center floor in upper area. | $2,776 |
| 3125-0042 | eMAX Forward body configuration - SM. Includes a lower double preconnect storage area extruded boxed out upper preconnect/storage area with horizontal hinged smooth plate door painted job color each side with D-ring latch and pull strap rack in upper storage area for (1) stokes basket (offset forward) - 84.5" long x 24" high x 7.5" deep and (1) preconnect area (offset rearward) center front pump access doors removable center floor in upper area. | $2,836 |
| 3125-0043 | SS eMAX Forward body configuration - SM. Includes a full height upper transverse storage area for miscellaneous equipment with boxed out style access door frame (full width of body). Center area to be sleeved for pump access with center front pump access door and removable center floor area. Right side door opening is narrower to allow a recessed area for the ladder lift arm. | $3,055 |
| 3125-0044 | eMAX Forward full width body configuration - SM. Includes a transverse storage area for (2) stokes baskets (84.5" long X 24" wide X 7.5" deep) with a vertical divider seperating the two. The lower 15" below stokes storage floor to compartment floor for storage of long cribbing center front pump access doors removable center floor in upper area. | $6,391 |
| 3125-0045 | eMAX Forward body configuration - SM. Includes a lower double pre connect storage area extruded boxed out upper transverse storage area with horizontal smooth plate painted job color hinged door each side with D-Ring style latch and pull strap rack in upper storage area for (2) back boards (vertical stored offset forward - sleeve each side of center pump access) and (1) stokes basket (offset rearward) - 84.5in. " long x 24in. high x 7.5in. deep center front pump access doors removable center floor in upper area. | $3,311 |
| 3125-0046 | eMAX Forward body configuration - SM. Includes a lower double preconnect storage area upper transverse storage area an adjustable storage rack in upper storage area for (2) backboards (or similar items vertically stored offset forward - sleeve each side of center pump access) with single preconnect storage rearward center front pump access doors and removable center floor in upper area. Doors to have D-Ring latches IPO thumb latches | $2,619 |

| Item No. | Description | |
|---|---|---|
| 3125-0047 | eMAX Forward body configuration - SM. Includes a lower double pre connect storage area extruded boxed out upper transverse storage area with horizontal hinged door each side with D-ring latch and pull strap rack in upper storage area for (2) backboards (vertical stored offset forward - sleeve each side of center pump access) and (1) stokes basket (offset rearward) - 84.5" long x 24" high x 7.5" deep center front pump access doors removable center floor in upper area. | $2,836 |
| 3125-0049 | e-MAX Forward body configuration for use with a(2) arm ladder rack and raised speed lays for a 4x4 application - SM. Includes a lower double pre connect storage area upper transverse storage area rack in upper storage area for (2) backboards (horizontal stored in the bottom of transverse - sleeve each side of center pump access) center front pump access doors and removable center floor in upper area. | $3,018 |
| 3125-0050 | SS eMAX forward body configuration - SM. Includes a lower double preconnect storage area open dunnage storage area accessible from top of body center front pump access doors and removable center floor in upper area. | $3,055 |
| 3125-0051 | SS eMAX forward body configuration - SM. Includes a lower double preconnect storage area upper double preconnect storage area center front pump access doors and removable center floor in upper area. Three (3) areas to hold 250' of 1.75. Bed 4 (upper right) to hold 250' of 2.5". | $3,430 |
| 3125-0052 | eMAX Forward body configuration - SM. Includes a lower double preconnect storage area upper double preconnect storage area forward area for dead lay with a lift up door (each side) to include pull strap push button latch wired to door ajar. Center front pump access doors and removable center floor in upper area. | $2,504 |
| 3125-0053 | eMAX Forward body configuration - SM. Includes a lower double preconnect storage area extruded boxed out upper preconnect/storage area with horizontal hinged door each side with push button latch and pull strap rack in upper storage area for (1) stokes basket (offset rearward) - 84.5" long x 24" high x 7.5" deep and (1) deadlay area (offset forward) center front pump access doors removable center floor in upper area. | $2,836 |
| 3125-0055 | eMAX Forward body configuration - SM. Includes a lower double preconnect storage area upper preconnect storage area sleeve in upper storage area for (2) backboards (vertical stored offset forward - sleeve is removable for center pump access) center front pump access doors and removable center floor in upper area.. Lower area to hold (2) 200' of 1.75" DJ and upper area to hold (1) 300' of 2.00" DJ. | $2,504 |
| 3125-0056 | eMAX Forward body configuration - SM. Includes an upper and lower double preconnect storage area. Center front pump access doors and removable center floor in upper area. | $2,669 |
| 3125-0057 | eMAX Forward body configuration - SM. Includes a lower double preconnect storage area upper preconnect storage area center front pump access doors and removable center floor in upper area. Lower area to hold (2) 200' of 1.75" DJ and upper area to hold (1) 200' of 2.50" DJ. | $2,504 |
| 3125-0058 | eMAX Forward body configuration - SM. Includes an extruded boxed out lower double pre connect storage area extruded boxed out upper transverse storage area with horizontal smooth plate painted job color hinged door each side with D-Ring style latch and pull strap rack in upper storage area for (2) back boards (vertical stored offset forward - sleeve each side of center pump access) and (1) stokes basket (offset rearward) - 84.5in. " long x 24in. high x 7.5in. deep center front pump access doors removable center floor in upper area. | $3,311 |
| 3125-0059 | eMAX Forward body configuration - SM. Includes a transverse storage area for (1) stokes baskets (84.5" long X 24" wide X 7.5" deep) with a vertical divider and center front pump access doors. | $2,880 |
| 3125-0060 | eMAX Forward body configuration - SM. Includes a lower double preconnect storage area upper preconnect storage area upper backboard storage sleeve with vertical hinged door center front pump access doors and removable center floor in upper area. Lower area to hold (2) 200' of 1.75" DJ and upper area to hold (1) 200' of 2.50" DJ. | $2,662 |
| 3125-0061 | SS eMAX Forward body configuration - SM. Includes one (1) lower preconnect storage area (forward) a rearward full height transverse storage area a sleeve in the upper storage area above the preconnect for (2) backboards and a Stokes basket. The storage areas will have a boxed out style access door frame (full width of body). Center area to be sleeved for pump access with center front pump access door and removable center floor area. Right side door opening is narrower to allow a recessed area for the ladder lift arm. Note; due to narrower officer side door opening rearward tranverse storage access may be limited to the drivers side only. | $3,055 |
| 3125-0062 | eMAX Forward body configuration - SM. Includes extruded boxed out upper and lower transverse storage area with rack in upper storage area with horizontal partition (centered) for misc storage (offset forward - sleeve each side of center pump access) and (1) stokes basket (offset rearward) - 84.5" long x 24" high x 7.5" deep center front pump access doors removable center floor in upper area. The lower 15" below stokes storage floor to compartment floor for storage of poly boxes. | $3,028 |
| 3125-0063 | eMAX Forward body configuration - SM. Includes a lower double preconnect storage area upper double preconnect storage area. Center front pump access doors and removable center floor in upper area. Pump module opening 23" wide for use with roll-up doors. | $3,021 |

| Item No. | Description | |
|---|---|---|
| 3125-0064 | eMAX Forward body configuration - SM. Includes a lower double preconnect storage area extruded boxed out upper preconnect storage area upper stokes storage sleeve with vertical hinged door each side with push button latch rack in upper storage area for (1) stokes basket (offset forward) - 84.5" long x 24" high x 7.5" deep and (1) preconnect area (offset rearward) center front pump access doors removable center floor in upper area. | $2,836 |
| 3130-0003 | Pump module. Includes 39" wide pump panel opening and running boards. | $5,039 |
| 3130-0004 | Pump module. Includes 45" wide pump panel opening and running boards. | $5,039 |
| 3130-0005 | Pump module. Includes 51" wide pump panel opening and running boards. | $5,039 |
| 3130-0006 | Pump module. Includes 57" wide pump panel opening and running boards. | $5,039 |
| 3130-0007 | Crosswalk module.Includes running boards (1) folding step each side and access handrails mounted on the pump module. | $994 |
| 3130-0008 | Crosswalk module. Includes walkway storage compartments with push button latches running boards (1) folding step each side and access handrails mounted on the pump module. | $1,449 |
| 3130-0009 | Speedlay module. Includes area for (2) speedlays with trays (1) area for dry storage lower storage compartments with push button latches and running boards. | $1,738 |
| 3130-0010 | Transverse Module (narrow). Locate forward of pump area. Includes a single compartment opening per side (with a shallow lower area and a transverse upper area with diamond plate flooring) and running boards. | $2,221 |
| 3130-0011 | Transverse Module (full width). Locate forward of pump area. Includes a single compartment opening per side (with a shallow lower area and a transverse upper area with smooth plate flooring). | $3,073 |
| 3130-0012 | Upper SM pump module with double stacked double crosslays and diamond plate storage pan. | $1,486 |
| 3130-0013 | Upper SM pump module with single stacked double crosslays and diamond plate storage pan. | $1,486 |
| 3130-0014 | Upper SM pump module with single stacked triple crosslays and diamond plate storage pan. | $1,863 |
| 3130-0015 | Upper SM pump module with single stacked double crosslay backboard storage and diamond plate storage pan. | $2,532 |
| 3130-0016 | Upper TM pump module with double stacked double crosslays. | $1,658 |
| 3130-0017 | Upper TM pump module with single stacked double crosslays. | $1,658 |
| 3130-0018 | Upper TM pump module with single stacked double crosslays and backboard storage. | $2,666 |
| 3130-0020 | Upper TM pump module with diamond plate storage pan. | $1,738 |
| 3130-0021 | Upper TM pump module with backboard storage and diamond plate storage pan. | $2,127 |
| 3130-0022 | Speedlay module. Includes area for (2) speedlays with trays (1) area for backboard storage with hinged doors with latches lower storage compartments with push button latches and running boards. | $2,747 |
| 3130-0023 | Speedlay module. Includes area for (3) speedlays with trays lower storage compartments with push button latches and running boards. | $2,116 |
| 3130-0024 | Upper SM pump module with diamond plate storage pan (only). | $1,613 |
| 3130-0030 | Stainless steel pump module. Includes 39" wide pump panel opening and running boards. | $6,302 |
| 3130-0031 | Stainless steel pump module. Includes 45" wide pump panel opening and running boards. | $6,302 |
| 3130-0032 | Stainless steel pump module. Includes 51" wide pump panel opening and running boards. | $6,302 |
| 3130-0033 | Stainless steel pump module. Includes 57" wide pump panel opening and running boards. | $6,302 |
| 3130-0036 | Stainless steel Speedlay module. Includes area for (2) speedlays with trays (1) area for dry storage lower storage compartments with push button latches and running boards. | $2,171 |
| 3130-0039 | Upper SM pump module with double stacked crosslays and diamond plate storage pan. | $1,857 |
| 3130-0051 | Stainless Steel Upper SM pump module with diamond plate storage pan (only). | $2,012 |
| 3130-0055 | Stainless steel speedlay module. Includes area for (3) speedlays with trays lower storage compartments with push button latches and running boards. | $2,642 |
| 3130-0062 | Upper SM pump module with quad single stacked crosslays and diamond plate storage pan. | $2,241 |
| 3130-0063 | Upper SM pump module with quad single stacked crosslays and diamond plate storage pan. The rear crosslay is for dry hose storage. | $2,241 |
| 3130-0064 | Upper stainless steel SM pump module with quad single stacked crosslays and diamond plate storage pan. | $2,800 |
| 3130-0065 | Upper stainless steel SM pump module with quad single stacked crosslays and diamond plate storage pan. The rear crosslay is for dry hose storage. | $2,800 |
| 3130-0067 | Upper TM pump module with single stacked triple crosslays. Includes (2) dividers. | $1,842 |
| 3130-0068 | Upper TM pump module with single stacked triple crosslays and backboard storage. | $3,186 |
| 3130-0069 | Upper SM pump module with double stacked triple dry crosslays. Crosslay floor to be hinged and accessed from driver side. Include gas shocks hold open rod adj tracks and (2) dividers w/handhold cut-outs on both ends. | $4,649 |
| 3130-0070 | Pump module. Includes lowered area for lowered upper module and 45" wide pump panel opening and running boards. | $6,302 |
| 3130-0071 | Upper SM pump module with single stacked triple crosslay backboard storage and diamond plate storage pan. | $2,910 |
| 3130-0083 | Speedlay module. Includes area for triple speedlays with divider(s) and lower storage compartments with push button latches and running boards. | $2,116 |

| Item No. | Description | |
|---|---|---|
| 3130-0084 | Speedlay module to have (2) dividers for a triple speedlay configuration. Each divider to be notched for preconnect nozzles. Preconnect plumbing to be internal to the speedlay. | $386 |
| 3130-0086 | Driver side SM module extension for vertical exhaust. Includes forward extended running board. | $279 |
| 3130-0087 | Upper SM pump module with double crosslay with double stack set-up in single stack depth. Includes backboard storage with raised push button latches and diamond plate storage pan (open back style). Crosslay divider to be adjustable side to side with slat style flooring. | $2,910 |
| 3130-0088 | Speedlay module to have (1) divider for a double configuration. The divider is to be held short for preconnect nozzle. Preconnect plumbing to be internal to the speedlay. Rearward area to be for backboard storage and includes vertically hinged doors with push-button latching. | $723 |
| 3130-0089 | Upper SM pump module with (5) single stacked crosslays- (4) 1.5" AND (1) 2.5" rearward. Includes open back style pan for generator. | $2,579 |
| 3130-0090 | Pump module. Includes 63" wide pump panel opening and running boards. | $5,039 |
| 3130-0093 | Upper SM pump module with double stacked triple crosslays and diamond plate storage pan. | $2,030 |
| 3130-0095 | Crosswalk module. Includes walkway storage compartments with push button latches running boards (1) diamond plate gator grip step each side and access handrails mounted on the pump module. | $1,673 |
| 3130-0096 | Speedlay module(stacked). Includes area for (2) stacked speedlays and (1) upper speedlay (crosslay style) lower storage compartments with push button latches and running boards. Lower speedlay upper speedlay and crosslay. | $2,359 |
| 3130-0098 | Speedlay module full width. Includes area for (4) speedlays (2) speedlays (stacked) per side with partition in center of module. Includes lower storage compartments with push button latches. | $3,840 |
| 3130-0099 | Pump module. Includes 45" wide pump panel opening and running boards. Interior of module to have 70" width. | $5,039 |
| 3130-0100 | Upper SM pump module with triple single stacked crosslays and diamond plate storage pan. Module is for use with a wider lower module base. To include a non-stepped pan with 1.5" extrusion rearward and narrow crosslay widths. | $1,863 |
| 3130-0101 | Upper SM pump module with single stacked double crosslay backboard storage and diamond plate storage pan. Interior to be 70" wide to match lower module. | $2,532 |
| 3130-0102 | Speedlay module(stacked). Includes area for (2) speedlays lower storage compartments with push button latches and running boards. | $2,116 |
| 3130-0103 | Speedlay module. Includes area for (2) speedlays with center divider lower storage compartments with push button latches and running boards. | $1,738 |
| 3130-0104 | Top mount enclosed pump module. Includes full width single crosslay backboard storage and storage pan with push button latches and enclosed side pump panels with AM Roll-Up Doors. | $14,220 |
| 3130-0106 | Upper pump module. Includes double double stacked crosslay area (rearward of module). Forward area to have storage for tools and backboards (horizontally stored). To include diamond plate hinged doors on sides (vertically hinged). The upper are is to have a diamond plate top. | $4,890 |
| 3130-0107 | Speedlay module. Includes area for (2) speedlays with dividers (1) area for backboard storage with hinged doors with latches lower storage compartments with push button latches and running boards. | $2,747 |
| 3130-0108 | Upper TM pump module with double stacked triple crosslays (single stack depth). | $2,666 |
| 3130-0109 | Upper TM pump module with single stacked single crosslay backboard storage and diamond plate storage pan. 2.5" crosslay to be rearward of the backboard storage. | $2,666 |
| 3130-0111 | Upper SM pump module with single stacked triple crosslay backboard storage and diamond plate storage pan. | $3,637 |
| 3130-0112 | Pump Module. Includes 61" wide pump panel opening and running boards. Required with CAFS system. Interior of module to have 70" width. | $5,039 |
| 3130-0113 | TM Pump Module. Includes triple crosslay area (crosslays to be 4.25"-divider-4.25"-divider-4.25" dry lay with stops provided bottom of crosslay to be max of 60.5" from ground level with air suspension lowered. In reference to stops provided. Preconnect 1 will be enclosed on driver's side and preconnect 2 will be enclosed on officer's side). Walkway on this module is wider front to rear than standard and the walkway is incorporated into the main module. Driver and Officer runningboard hose trays to be angled and "floating" style.. | $8,693 |
| 3130-0114 | Pump module. Includes 51" wide pump panel opening and running boards. Interior of module to have 70" width. | $5,126 |
| 3130-0115 | Upper SM pump module with single stacked double crosslays and diamond plate storage pan. Interior of module to have 70" width. | $1,486 |
| 3130-0116 | Pump module. Includes 39" wide pump panel opening and running boards. Interior of module to have 70" width. | $5,126 |
| 3130-0119 | Upper TM pump module with diamond plate storage pan. Interior to be 70" wide to match lower module. | $1,738 |
| 3130-0164 | Upper SM pump module with double stacked triple crosslays (single stacked depth) and diamond plate storage pan. | $4,309 |

| Item No. | Description | |
|---|---|---|
| 3130-0165 | Upper SM pump module with (5) single stacked crosslays. (4) single stacked 1.5" crosslays (1) single stacked 2.5" crosslay rearward and diamond plate storage pan. | $2,579 |
| 3130-0168 | Upper SM pump module with triple single stacked crosslays and wide dry crosslay storage area. The area rearward of crosslays is for deck gun channel. | $7,579 |
| 3130-0169 | Transverse module to hold: Lower section (1) Stokes basket and (2) backboards. Upper section to hold miscellaneous long handled tools. | $614 |
| 3130-0170 | Upper SM pump module with double stacked (dry) crosslays and diamond plate storage pan. | $1,486 |
| 3130-0171 | Transverse Module (narrow). Locate forward of pump area. Includes a single compartment opening per side (with a shallow lower area and a transverse upper area with diamond plate flooring) and running boards. Upper area for triple stacked double crosslay. Transverse floor to be over framerails only do not extend over tool compartments. | $4,011 |
| 3130-0172 | Upper SM pump module with triple stacked double crosslays and diamond plate storage pan. | $2,666 |
| 3130-0173 | Stainless steel speedlay module. Includes area for (2) speedlays with center divider lower storage compartments with push button latches and running boards. | $2,172 |
| 3130-0174 | Pump module for top mount enclosed operation. Includes 57" panel opening and area for double stacked double crosslay with storage pan. Module has sanded finish and crosslay floors are slotted for draining. | $10,009 |
| 3130-0175 | Raised crosswalk module. Includes walkway storage compartments with push button latches running boards (1) diamond plate walkway step w/gator grip each side and access handrails mounted on the pump module. Includes 8" raise with 5" high storage compartment with drop down diamond plate doors with push button latches. | $2,803 |
| 3130-0176 | Upper TM pump module with double stacked double crosslays with backboard storage. | $3,492 |
| 3130-0177 | Upper SM pump module with backboard storage and diamond plate storage pan. Backboard storage to be located rearward of storage pan. Deck gun channel to be located between pan and back board compartment. | $2,436 |
| 3130-0179 | Speedlay module(stacked). Includes area for (2) stacked speedlays and (1) upper storage compartment lower storage compartments with push button latches and running boards. Lower 1.75 speedlay and upper 2.5 speedlay. Single diamond plate cover for upper storage area. Includes (1) grab handle and (2) hold downs. | $3,664 |
| 3130-0180 | Transverse Module (narrow). Locate forward of pump area. Includes a single compartment opening per side (with a shallow lower area and a transverse upper area with diamond plate flooring) and running boards. Upper area for single stacked triple crosslay. | $4,011 |
| 3130-0181 | Pump/Speedlay Module. Includes area for runningboards upper side stainless steel panels (2) removable speedlay trays and upper dunage storage pan. | $11,625 |
| 3130-0182 | Upper SM pump module with triple crosslays (single stacked depth) and diamond plate storage pan. Forward crosslays to be double stacked and rearward crosslay to be single stacked dry lay. | $4,687 |
| 3130-0183 | Upper SM pump module with double stacked triple crosslays and diamond plate storage pan. Upper module to be full width as applicable to match lower module. | $4,477 |
| 3130-0184 | Pump module top mount with speedlays. Includes 41" wide pump panel opening dunnage pan and running boards. Raised top mount walkway includes storage compartments with D-Ring latches (1) 5" diamond plate top mount walkway step with gator grip each side and access handrails mounted on the pump module. Raised walkway for backboard storage includes diamond plate door with push button latches. Includes area for (2) speedlays with 1.5" plumbing. Driver and Officer side upper pump access panels to be horizontally hinged with diamond plate doors. Includes (2) D-Ring latches and (2) gas shock hold opens for each. | $9,948 |
| 3130-0186 | Upper TM pump module with double stacked single 2.5" crosslay. Includes area for dry crosslay storage rearward of 2.5". | $2,666 |
| 3130-0187 | Upper SM pump module with triple single stacked crosslays and diamond plate storage pan. Each crosslay to be 6" wide for nozzle storage. | $2,102 |
| 3130-0188 | Upper TM pump module with single stacked quad crosslays. Includes (3) dividers. | $2,029 |
| 3130-0189 | Upper SM pump module with backboard storage and diamond plate storage pan. Backboard storage to be located forward of storage pan. | $2,436 |
| 3130-0190 | Top Mount Pump Module. Includes area for single stacked double crosslay (notched divider) and TM walkway with folding steps with intergral lights and (2) vertical handrails. | $1,998 |
| 3130-0191 | Top Mount Pump Module. Includes area for single stacked triple crosslay (notched dividers) and TM walkway with folding steps with integral lights and (2) vertical handrails. | $2,424 |
| 3130-0193 | Side Mount Pump Module. Includes area for single stacked triple crosslay (notched dividers). | $432 |
| 3130-0194 | Top Mount Pump Module. Includes area for a double speedlay and TM walkway with folding steps with integral lights and (2) vertical handrails. | $3,159 |
| 3130-0195 | Top Mount Pump Module. Includes area for a double speedlay single crosslay and TM walkway with folding steps with integral lights and (2) vertical handrails. | $3,586 |
| 3130-0196 | Upper SM pump module with single stacked double crosslay backboard storage and diamond plate storage pan. Backboard storage opening to be 6.5" wide. | $4,368 |
| 3130-0197 | Upper SM pump module with double stacked double crosslay for 400' of 1.75" hose in each crosslay backboard storage and diamond plate storage pan. | $4,979 |

| Item No. | Description | |
|---|---|---|
| 3130-0198 | Upper TM pump module with single stacked double crosslays. Each crosslay to hold 100' of 3" DJ. | $4,104 |
| 3130-0199 | Upper SM pump module with single stacked triple crosslays and diamond plate storage pan. (2) Backboard and Ferno model 6 or EXL scoop stretcher storage box located below the storage pan with lift-up diamond plate door with thumb latches each side. Upper module to be full width as applicable to match lower module. | $5,523 |
| 3130-0200 | Transverse Module (narrow). Locate forward of pump area. Includes a single compartment opening per side (with a shallow lower area and a transverse upper area with diamond plate flooring) and running boards. Upper area for single stacked quad crosslay. Plumbing to terminate thru outboard extrusion as follows: #1 driver side #2 officer side #3 driver side and #4 officer side. | $5,892 |
| 3130-0201 | Upper SM pump module with 2.5" double stacked double crosslay and diamond plate storage pan. Both preconnects to be offset to officer side of module. | $5,155 |
| 3130-0202 | Speedlay module(stacked). Includes area for (3) speedlays lower storage compartments with push button latches and running boards. | $2,359 |
| 3130-0203 | Transverse Module (narrow). Locate forward of pump area. Includes a single compartment opening per side (with a shallow lower area and a transverse upper area with diamond plate flooring) and upper area for triple stacked double crosslay with backboard storage. | $4,750 |
| 3130-0204 | Pump module for top mount enclosed operation. Includes 47" panel opening area for double stacked single crosslay area for double stacked double speedlay with trays stacked side by side lower storage compartments with D-ring latches and running boards. Crosslay floor to be slotted for draining. Includes backboard storage forward of crosslay. Includes deck gun channel and open back storage pan rearward of crosslay. | $12,966 |
| 3130-0205 | Upper TM pump module with backboard storage and diamond plate storage pan. Backboard storage located rearward of storage pan. | $2,127 |
| 3130-0206 | Upper SM pump module with 2.5" double stacked double crosslays and diamond plate storage pan. | $4,601 |
| 3130-0207 | Transverse Module (narrow). Locate forward of pump area. Includes a single compartment opening per side (with a shallow lower area and a transverse upper area with diamond plate flooring) and running boards. Upper area for double stacked double crosslay. | $4,622 |
| 3130-0208 | Pump/Speedlay Module. Includes area for E-ONE supplied runningboards (2) removable speedlay trays and upper diamond plate panels/doors for access to (2) horizontally stored backboards. | $12,073 |
| 3130-0209 | Crosswalk module. Includes walkway storage compartments with D-ring latches running boards (1) folding step each side and access handrails mounted on the pump module. | $1,744 |
| 3130-0210 | Speedlay module. Includes area for (2) speedlays with trays (1) area for backboard storage with hinged doors with latches lower storage compartments with D-ring latches and running boards. Speedlays to hold 250' of 1.75" DJ hose. | $3,459 |
| 3130-0211 | Upper SM pump module with quad single stacked crosslays and diamond plate storage pan. Preconnects to located as follows: Preconnects 1 and 3 to be offset to officer side Preconnects 2 and 4 to be offset to driver side. Crosslays to be 66" high from ground. Includes diamond plate access door on officer side of module with push button latches. | $4,075 |
| 3130-0212 | Pump module. Includes 57" wide pump panel opening and running boards. Crosslays to be 66" high from ground. | $6,264 |
| 3130-0214 | Upper SM pump module with single stacked single crosslay and diamond plate storage pan. | $4,302 |
| 3130-0215 | Transverse Module (full width). Locate forward of pump area. Includes a single compartment opening per side (with a shallow lower area and a transverse upper area with diamond plate flooring). Upper area for double stacked double crosslay. | $3,994 |
| 3130-0216 | Upper SM pump module with double stacked triple crosslays and diamond plate storage pan. | $6,755 |
| 3130-0217 | Speedlay module(stacked). Includes area for (3) 1.75" speedlays lower storage compartments with push button latches and running boards. Upper speedlay to be dry lay. | $2,359 |
| 3130-0218 | Upper TM pump module with 2.5" triple stacked single crosslay. | $4,290 |
| 3130-0219 | Enclosed Pump Module with Triple Speedlays. Includes 45" wide pump panel opening. Includes area for (3) speedlays with trays lower storage compartments with push button latches forward of pump panel opening. Upper module area to have storage pan. | $17,928 |
| 3130-0220 | TM Upper module. Includes wide pan and open back style for special reel requirement. | $4,183 |
| 3130-0221 | TM Pump Module. Includes triple crosslay area (crosslays to be 4.25"-divider-4.25"-divider-4.25") Rearward crosslay to be for a dry lay. Bottom of crosslay to be max of 60.5" from ground level with air suspension lowered. Walkway on this module is wider front to rear than standard and the walkway is incorporated into the main module. Driver and Officer runningboard hose trays to be angled and "floating" style. Special top mount diamond plate walkway access steps. Each step to be positioned where top stepping surface is centered between top of runningboard and top of walkway. | $8,866 |
| 3130-0222 | Upper TM pump module with single stacked double crosslays. Rearward crosslay to hold 2.5" DJ hose. | $2,206 |

| Item No. | Description | |
|---|---|---|
| 3130-0224 | Upper TM pump module with single stacked triple crosslays dunnage storage pan and backboard storage. Storage pan located between T/M panel and backboard storage. | $3,953 |
| 3130-0225 | Pump module. Includes 45" wide pump panel opening and running boards. Includes area forward of pump panel opening for (2) speedlays (stacked) lower storage compartments with push button latches. | $8,556 |
| 3130-0226 | Upper SM pump module with double stacked double crosslay (single stack depth) and diamond plate storage pan. Built in compartment on officer side of module rearward of crosslays. Compartment dimensions to be approx. 18.5"W x 20"H x 20"D includes stainless steel door with push button latches. Storage pan to be stepped around compartment. Crosslay divider to be adjustable side to side. | $4,237 |
| 3130-0227 | Pump module. Includes lowered area for lowered upper module and 51" wide pump panel opening and running boards. | $6,302 |
| 3130-0228 | Upper SM pump module with single stacked double crosslay backboard storage and diamond plate storage pan. 2.5" plumbing for rear crosslay. | $3,126 |
| 3130-0229 | Speedlay module. Includes area for triple speedlays with divider(s) and lower storage compartments with push button latches and running boards. | $3,278 |
| 3130-0230 | One piece side mount pump module with (2) 4.25" and (1) 5.5" single stacked triple crosslays and diamond plate storage pan. Includes 76" wide (side to side) module with a 45.5" wide pump panel opening and running boards. | $6,900 |
| 3130-0231 | Speedlay module. Includes area for triple speedlays with divider(s) and lower storage compartments with D-ring latches and running boards. | $2,335 |
| 3130-0232 | Speedlay module(stacked). Includes area for (3) speedlays lower storage compartments with push button latches and running boards. | $2,877 |
| 3130-0233 | Speedlay module. Includes area for triple speedlays with divider(s) and lower storage compartments with push button latches and running boards. Forward speedlay to have 2.5" plumbing. | $2,390 |
| 3130-0234 | Pump module. Includes 45.5" wide pump panel opening and running boards. Lowered to 45.5" high to allow approx 69" high crosslay height from ground. | $6,228 |
| 3130-0236 | Upper SM pump module with double stacked double crosslays and diamond plate storage pan. Storage pan to be open back style. | $4,795 |
| 3130-0237 | Upper TM pump module with 2.5" double stacked single crosslay. | $1,658 |
| 3130-0238 | Speedlay module. 48"H IPO 54.5"H so as not to block rear windows. Includes area for (2) speedlays with center divider lower storage compartments with push button latches and running boards. | $3,302 |
| 3130-0239 | Upper TM pump module with single stacked double crosslays and diamond plate storage pan. | $2,425 |
| 3130-0240 | Pump module. Includes 51" wide pump panel opening and running boards. Includes modifications for 4x4 and plumbing applications as required. | $6,301 |
| 3130-0241 | Upper SM pump module with single stacked triple crosslay backboard storage and diamond plate storage pan. Includes 8"W x 8"H storage rearward of the backboard storage and below the storage pan. | $5,117 |
| 3130-0242 | Speedlay module(stacked). Includes area for (2) stacked speedlays and (1) upper speedlay (crosslay style) lower storage compartments with push button latches and running boards. Lower speedlay upper speedlay and crosslay. For use with removable or slide-master tray(s). | $2,941 |
| 3130-0243 | Transverse Module (narrow). Locate forward of pump area. Includes a single compartment opening per side (with a shallow lower area and a transverse upper area with diamond plate flooring) and running boards. Upper area for triple stacked double crosslay. Includes backboard storage in transverse upper for (5) backboards each backboard slot be approx. 3" wide. | $5,666 |
| 3130-0246 | Upper SM pump module with single stacked triple crosslay backboard storage and diamond plate storage pan. Forward (2) crosslay to be 6" wide and the rearward crosslay to be 6.75" wide. | $4,565 |
| 3130-0247 | Upper SM pump module with triple crosslays and diamond plate storage pan. Forward (2) crosslays to be single stack and rearward crosslay to be double stack. | $4,175 |
| 3130-0248 | Pump module - one piece. Includes 45.5" wide pump panel opening and running boards. | $5,039 |
| 3130-0249 | Single stacked triple crosslays and diamond plate storage pan. Crosslays 5.5" wide each to hold 200'-1.75"DJ or 150-200'-2.5"DJ. | $1,863 |
| 3130-0250 | Pump module. Includes 45" wide pump panel opening. Running boards to be smooth plate with gator grip and painted black duraback. | $5,699 |
| 3130-0252 | Upper SM pump module with double stacked single crosslay and diamond plate storage pan. Crosslay to be dry lay. | $3,141 |
| 3130-0254 | Pump module. Includes 75" wide pump panel opening and running boards. | $5,039 |
| 3130-0257 | Crosslay plumbing to be run thru a channel on each side of forward upper corner of the lower module. Preconnects to located as follows: Preconnects 1 and 3 to be offset to officer side Preconnect 2 to be offset to driver side. The plumbing channel to be the width of the crosslay opening. The plumbing channels may require the pump panel and/or pump access door(s) to be modified for clearance. | $1,227 |

| Item No. | Description | |
|---|---|---|
| 3130-0259 | Pump module. Includes 51" wide pump panel opening and running boards. Lowered to allow 70" high crosslay height from ground. | $6,143 |
| 3130-0264 | Upper SM pump module with single stacked triple crosslays and diamond plate storage pan. Storage pan to be open back style. | $1,863 |
| 3130-0265 | Transverse Module (narrow). Locate forward of pump area. Includes a single compartment opening per side (with a shallow lower area and a transverse upper area with diamond plate flooring) and running boards. Upper area for triple crosslay forward (2) crosslays to be single stacked and rearward crosslay to be double stacked. | $4,871 |
| 3130-0266 | Transverse Module (narrow). Locate forward of pump area. Includes a single compartment opening per side (with a shallow lower area and a transverse upper area with diamond plate flooring) and running boards. Upper area for double stacked double crosslay. | $4,622 |
| 3130-0271 | Upper SM pump module with triple crosslays and diamond plate storage pan. Forward (2) crosslays to be single stack and rearward crosslay to be double stack. Crosslay plumbing to be located centered in place of outboard. | $4,175 |
| 3130-0273 | Pump module. Includes 51" wide pump panel opening and running boards. Crosslays to be 73" high from ground. | $7,246 |
| 3130-0274 | Upper SM pump module with double stacked (single stack depth) double crosslays and diamond plate storage pan. Front headboard stepped down 5" to allow 18" deep crosslays. | $2,966 |
| 3130-0275 | Upper SM pump module with single stacked double crosslay backboard storage and diamond plate storage pan. Storage pan to be open back style due to Honda Generator. Storage pan to be 15.75" deep with 3" extrustions to step up generator for air flow. | $3,636 |
| 3130-0276 | Speedlay module. Includes area for triple speedlays with divider(s) and lower storage compartments with push button latches and running boards. Speedlay module tool compartments to be 20" high. | $2,942 |
| 3130-0277 | Speedlay module. Includes area for (2) speedlays with trays lower storage compartments with push button latches and running boards. | $1,958 |
| 3130-0278 | Pump module. Includes 45" wide pump panel opening and running boards. Includes area forward of pump panel opening for (2) speedlays (stacked) lower storage compartments with push button latches | $7,453 |
| 3130-0279 | Upper TM pump module with double stacked single crosslay and backboard storage. Crosslay to be rearward of the backboard storage. Crosslay to hold 3" DJ hose. | $4,375 |
| 3130-0280 | Upper SM pump module with single stacked triple crosslay backboard storage and diamond plate storage pan. Rearward crosslay to be double stacked for extra capacity. | $4,565 |
| 3130-0281 | Stainless steel 46" wide lower pump module. Includes side running boards with Gator Grip. | $5,039 |
| 3130-0282 | Stainless steel 46" wide lower pump module. Includes side running boards with Bustin Tread inserts. | $5,039 |
| 3130-0284 | Stainless steel 50" wide lower pump module. Includes side running boards with Bustin Tread inserts. | $5,039 |
| 3130-0285 | Stainless steel 54" wide lower pump module. Includes side running boards with Gator Grip. | $5,039 |
| 3130-0286 | Stainless steel 54" wide lower pump module. Includes side running boards with Bustin Tread. | $5,039 |
| 3130-0287 | Stainless steel 60" wide lower pump module. Includes side running boards with Gator Grip. This size required for most CAFS units. | $5,039 |
| 3130-0288 | Stainless steel 60" wide lower pump module. Includes side running boards with Bustin Tread. This size required for most CAFS units. | $5,039 |
| 3130-0289 | Upper SM stainless steel pump module with single stacked double crosslays and top open storage with treadplate flooring. | $1,486 |
| 3130-0290 | Upper SM stainless steel pump module with double stacked double crosslays and top open storage with treadplate flooring. | $1,486 |
| 3130-0291 | Upper SM stainless steel pump module with single stacked triple crosslays and top open storage with treadplate flooring. | $1,863 |
| 3130-0292 | Upper SM stainless steel pump module with double stacked triple crosslays and top open storage with treadplate flooring. | $1,863 |
| 3130-0293 | Upper SM stainless steel pump module with single stacked double crosslays and a backboard with top open storage with treadplate flooring. | $2,532 |
| 3130-0294 | Upper SM stainless steel pump module with double stacked double crosslays and a backboard plus top open storage with treadplate flooring. | $2,532 |
| 3130-0295 | Upper SM stainless steel pump module with single stacked triple crosslays and a backboard with top open storage with treadplate flooring. | $2,910 |
| 3130-0296 | Upper SM stainless steel pump module with double stacked triple crosslays and a backboard with top open storage with treadplate flooring. | $2,910 |
| 3130-0297 | Upper SM stainless steel pump module without crosslays. Top open storage only with treadplate flooring. For use with crosslays mounted on top of a front of pump transverse storage module or with preconnects in the main hose bed or as otherwise specified. | $1,613 |
| 3130-0298 | Upper TM stainless steel pump module with single stacked double crosslays and top open storage with treadplate flooring. | $1,658 |

| Item No. | Description | |
|---|---|---|
| 3130-0299 | Upper TM stainless steel pump module with single stacked double crosslays and a backboard with top open storage (if space available) with treadplate flooring. | $2,666 |
| 3130-0300 | Upper TM stainless steel pump module without crosslays. Top open storage only with treadplate flooring. For use with various preconnected discharge options. | $1,738 |
| 3130-0301 | Speedlay module. Includes area for (2) speedlays (1) area for backboard storage with hinged doors with latches stainless steel lower storage compartments with push-button latches and running boards. | $2,747 |
| 3130-0302 | Speedlay module. Includes area for (3) speedlays stainless steel lower storage compartments with push-button latches and running boards. | $2,116 |
| 3130-0303 | Speedlay module. Includes area for (2) 1-3/4" speedlays with a sliding tray and center divider stainless steel lower storage compartments with push-button latches and running boards. | $1,738 |
| 3130-0304 | Speedlay module. Includes area for (2) speedlays with dividers (1) area for backboard storage with hinged doors with latches stainless steel lower storage compartments with push button latches and running boards. | $2,747 |
| 3130-0305 | Speedlay module. Includes area for triple speedlays with dividers and stainless steel lower storage compartments with push-button latches and running boards. | $2,116 |
| 3130-0306 | Transverse Module (narrow). Located forward of pump area. Includes a single stainless steel compartment opening per side (with a shallow lower area and a transverse upper area with SS flooring) and running boards with Gator Grip. | $2,221 |
| 3130-0307 | Transverse module (20" wide) with brushed stainless steel doors. Located forward of pump area and welded integral. Includes a single stainless steel compartment opening per side (with a shallow lower area and a transverse upper area) and side running boards with Bustin Tread. | $2,221 |
| 3130-0308 | Crosswalk module. Includes stainless steel walkway storage compartments with lift-up access lids and butterfly latches non-skid running boards with Bustin Tread and access hand rails mounted one each side to the front of the pump enclosure assembly. | $1,449 |
| 3130-0309 | Speedlay module (stacked). Module to be full width. Includes area for (2) stacked speedlays and (1) upper speedlay (crosslay style) lower storage compartments with push button latches and running boards. Lower speedlay upper speedlay and crosslay. For use with removable or slide-master tray(s). | $4,265 |
| 3130-0312 | Upper SM pump module with double stacked double crosslay and diamond plate storage pan. Area rearward of crosslays to be raised 12" due to ladder tunnel above the tank. | $4,565 |
| 3130-0313 | Pump module. Includes 51" wide pump panel opening and running boards. Crosslays to be 66" high from ground. | $6,264 |
| 3130-0314 | Pump module. Includes 39" wide pump panel opening and running boards. Includes area forward of pump panel opening for (2) speedlays (stacked) lower storage compartments with push button latches. | $8,556 |
| 3130-0315 | Pump module. Includes 57" wide pump panel opening and running boards. Includes modifications for 4x4 and plumbing applications as required. | $6,301 |
| 3130-0318 | Upper SM pump module with double stacked (single stacked depth) double crosslays and diamond plate storage pan. | $1,863 |
| 3130-0319 | Upper SM pump module with triple crosslays (single stacked depth) and diamond plate storage pan. Forward crosslays to be double stacked and rearward crosslay to be single stacked dry lay. | $2,514 |
| 3130-0320 | Pump module. Includes 45" wide pump panel opening and running boards. Lowered to allow 70" high crosslay height from ground. | $6,143 |
| 3130-0321 | Pump module. Includes 51" wide pump panel opening and running boards. Includes area forward of pump panel opening for (2) speedlays (stacked) lower storage compartments with push button latches. For use with removable or slide-master tray(s). | $8,777 |
| 3130-0322 | Pump module. Includes 33" wide pump panel opening and running boards. | $5,039 |
| 3130-0323 | Pump module. Includes 39" wide pump panel opening and running boards. Includes modifications for 4x4 and plumbing applications as required. | $6,301 |
| 3130-0326 | Top Mount Pump Module. Includes area for single stacked double crosslay (notched divider) and TM walkway with dual lighted LED folding steps with intergral lights and (2) vertical handrails. | $1,998 |
| 3130-0327 | Top Mount Pump Module. Includes area for single stacked triple crosslay (notched dividers) and TM walkway with dual lighted LED folding steps with integral lights and (2) vertical handrails. | $2,424 |
| 3130-0328 | Top Mount Pump Module. Includes area for a double speedlay and TM walkway with dual lighted LED folding steps with integral lights and (2) vertical handrails. | $3,159 |
| 3130-0329 | Top Mount Pump Module. Includes area for a double speedlay single crosslay and TM walkway with dual lighted LED folding steps with integral lights and (2) vertical handrails. | $3,586 |
| 3130-0330 | Crosswalk module. Includes running boards (1) dual lighted LED folding step each side and access handrails mounted on the pump module. | $994 |
| 3130-0331 | Crosswalk module. Includes walkway storage compartments with push button latches running boards (1) dual lighted LED folding step each side and access handrails mounted on the pump module. | $1,449 |

| Item No. | Description | |
|---|---|---|
| 3130-0332 | Speedlay module(stacked). Includes area for (2) stacked speedlays and (1) upper speedlay (crosslay style plumbing to be offset to driver side) lower storage compartments with push button latches and running boards. Lower speedlay upper speedlay and crosslay. For use with removable or slide-master tray(s). | $2,941 |
| 3130-0333 | Upper SM pump module with bolt-on top. Includes bracing below bolt-on top for light tower mounting. Vertically hinged stainless steel panels with push button latches on each side of the module. | $1,613 |
| 3130-0362 | Crosswalk module.Includes running boards (1) dual lighted LED folding step each side and access handrails mounted on the pump module. Diamond plate walkway plate to be 20" wide due to 2-door Freightliner DEF tank. | $994 |
| 3130-0364 | Special Top Mount Pump Module. Includes area for a double speedlay and TM walkway with dual lighted LED folding steps with integral lights and (2) vertical handrails. Extend-a-gun piping located in the dunnage pan offset to officer side. | $4,264 |
| 3130-0365 | Upper top mount triple speedlays and storage in remaining area. | $2,761 |
| 3130-0366 | Speedlay module full width wtih stokes basket and backboard storage. Includes area for (2) speedlays lower storage compartments with push button latches. Upper area of module to hold (1) stokes basket and (2) backboards. Includes vertically hinged smooth plate door(s) with push button latches. | $4,442 |
| 3130-0367 | Upper SM pump module with 2.5" double stacked single crosslay and diamond plate storage pan. 300' of 2.5" DJ | $1,863 |
| 3130-0368 | Pump module. Includes 51" wide pump panel opening and running boards. Upper SM pump module with single stacked double crosslays with diamond plate storage pan. Crosslays to be 68" high from ground. | $6,849 |
| 3130-0377 | Upper SM pump module with single stacked triple crosslays and diamond plate storage pan. Rearward crosslay to be double stacked dry lay. | $2,966 |
| 3130-0378 | Pump module. Includes 33" wide pump panel opening and running boards. Includes modifications for front headboard due to special exhaust routing. | $6,301 |
| 3130-0379 | Pump module. Includes 51" wide pump panel opening and running boards. Running boards to include gator grip and be painted black duraback. | $5,611 |
| 3130-0380 | Raised crosswalk module. Includes walkway storage compartments with push button latches running boards (1) smooth plate walkway step w/gator grip each side and access handrails mounted on the pump module. Includes 8" raise with 5" high storage compartment with drop down aluminum smooth plate doors with push button latches. T/M walkway and walkway access steps to be smooth plate gator grip to be painted black durabak. All access doors on module to be painted gray zolatone. | $3,473 |
| 3130-0382 | Pump module. Includes 51" wide pump panel opening and running boards. Includes area forward of pump panel opening for (2) speedlays (stacked) lower storage compartments with push button latches. | $8,556 |
| 3130-0383 | Pump module. Includes 57" wide pump panel opening and running boards. Crosslays to be 70" high from ground. | $6,264 |
| 3130-0385 | Pump module. Includes 45" wide pump panel opening and running boards. Includes area forward of pump panel opening for (3) speedlays (stacked) lower storage compartments with push button latches. | $9,112 |
| 3130-0386 | Pump module. Includes 69" wide pump panel opening and running boards. | $5,039 |
| 3130-0388 | Crosswalk module with running boards. Includes upper walkway storage compartments with embossed diamond plate lift-up walkway lids (includes gas shock(s) as required to hold the lids at 90 degrees with butterfly style latch(es) for securing in the closed position). Compartments to be large as possible and include (1) light each (match body compartments for brand and type of light)and door ajar indicator wiring. Outboard sides of walkway to have diamond plate panels and each includes (1) intermediate style step and access handrails mounted on the pump module. | $2,287 |
| 3130-0389 | Pump module. Includes 57" wide pump panel opening and running boards. Includes area forward of pump panel opening for (3) speedlays (stacked) lower storage compartments with push button latches. For use with removable tray(s). | $8,008 |
| 3130-0390 | Upper SM pump module with triple crosslays and diamond plate storage pan. Forward (2) crosslays to be single stack and rearward crosslay to be double stack. | $4,175 |
| 3130-0391 | Upper TM pump module with single stacked triple crosslays. Forward (2) crosslays to be single stack and rearward crosslay to be double stack. | $2,329 |
| 3130-0392 | Upper TM pump module with single stacked double crosslays and backboard storage. Crosslays to be 6" wide each. | $2,942 |
| 3130-0393 | Pump module. Includes 45" wide pump panel opening and running boards. Lowered to allow 72" high crosslay height from ground. | $5,039 |
| 3130-0394 | Pump module. Includes 39" wide pump panel opening and running boards. Includes area forward of pump panel opening for (2) speedlays (stacked) lower storage compartments with push button latches. For use with removable or slide-master tray(s). | $8,777 |

| Item No. | Description | |
|---|---|---|
| 3130-0395 | Upper TM pump module with double stacked double crosslays with backboard storage. | $2,697 |
| 3130-0396 | Upper SM pump module with double stacked (single stack depth) double crosslays and diamond plate storage pan. | $2,241 |
| 3130-0397 | Upper SM stainless steel pump module with single stacked triple crosslays and top open storage with treadplate flooring. Crosslay 1 to be a dead lay. | $1,863 |
| 3130-0398 | Pump module. Includes 45" wide pump panel opening and running boards. Includes area forward of pump panel opening for (2) speedlays (stacked) lower storage compartments with push button latches. For use with removable or slide-master tray(s). | $8,777 |
| 3130-0399 | Pump module for top mount enclosed operation. Includes 51" panel opening area for double stacked double speedlay with trays stacked side by side lower storage compartments with push button latches and running boards. Speedlay floor to be slotted for draining. Includes backboard storage for (3) backboards. Includes deck gun channel and open back storage pan. | $12,966 |
| 3130-0400 | Pump module. Includes 51" wide pump panel opening and running boards. Lowered to allow 72" high crosslay height from ground. | $5,544 |
| 3130-0403 | Upper SM pump module with single stacked triple crosslays and transverse storage area rearward of deckgun channel with stainless steel lift-up door with push button latches on driver side. | $2,677 |
| 3130-0409 | Pump module. Includes 31" wide pump panel opening and running boards. | $5,039 |
| 3130-0413 | Upper SM pump module with single stacked triple crosslays deck gun channel and transverse storage area. Transverse storage area to be rearward of the deck gun channel. Includes vertically hinged diamond plate doors with butterfly latches doors to be hinged rearward. | $3,265 |
| 3130-0414 | Enclosed Pump Module with Triple Speedlays. Includes 51" wide pump panel opening. Includes area for (3) speedlays with trays lower storage compartments with push button latches forward of pump panel opening. Upper module area to have storage pan. | $17,928 |
| 3130-0415 | Upper SM pump module with single stacked triple crosslays and diamond plate storage pan. Each crosslay to be 4.75" wide. | $1,863 |
| 3130-0419 | Pump module. Includes 39" wide pump panel opening and running boards. Includes modifications for front headboard due to special exhaust routing. | $6,301 |
| 3130-0420 | Upper SM pump module with double stacked triple crosslays and diamond plate storage pan. Crosslay plumbing to be located as far outboard as possible. | $2,030 |
| 3130-0422 | Pump module. Includes 45" wide pump panel opening and running boards. Includes area forward of pump panel opening for (3) speedlays (stacked) lower storage compartments with push button latches. For use with removable tray(s). | $9,112 |
| 3130-0424 | Upper SM pump module with single stacked double crosslays and diamond plate open back storage pan. | $1,486 |
| 3130-0426 | Upper TM pump module with diamond plate open back storage pan. | $1,958 |
| 3130-0427 | Upper SM pump module with backboard storage and diamond plate storage pan. Backboard storage to be located forward of storage pan. Backboard storage to be 12" wide and includes divider 4" off forward wall to create two storage spaces. | $2,732 |
| 3130-0428 | Upper TM pump module with storage area with horizontally hinged access door (wired to door ajar) with push button latches one each side. | $2,662 |
| 3130-0430 | Pump module. Includes 39" wide pump panel opening and running boards. Upper SM pump module with double stacked double crosslays. Crosslays to be 66" high from ground. | $7,109 |
| 3130-0431 | Pump module. Includes 45" wide pump panel opening and running boards. Upper SM pump module with double stacked double crosslays with diamond plate storage pan. Crosslays to be 66" high from ground. | $6,849 |
| 3130-0432 | Pump module for top mount enclosed operation. Includes 80" panel opening and area for double stacked double crosslay with storage pan. Module has sanded finish and crosslay floors are slotted for draining. | $10,009 |
| 3130-0436 | Upper SM pump module with single stacked double crosslays and transverse storage area rearward of deckgun channel with aluminum Zolatone lift-up door with push button latches on officer side. | $2,454 |
| 3130-0437 | Upper SM pump module with single stacked triple crosslays and diamond plate open back storage pan. Duunage pan to be 17.75" deep on driver side due to booster reel height. | $2,413 |
| 3130-0438 | Speedlay module full width wtih stokes basket and backboard storage. Includes area for (3) speedlays: (1) 2.5" in lower speedlay and (2) 1.5" in upper speedlay lower storage compartments with push button latches. Upper area of module to hold (1) stokes basket and (2) backboards. Includes vertical hinged smooth plate door(s) with push button latches. | $4,380 |
| 3130-0439 | Stainless steel 62" wide lower pump module. Includes side running boards with Bustin Tread. This size required for most CAFS units. | $5,148 |
| 3130-0440 | Upper SM pump module with single stacked triple crosslay backboard storage and diamond plate storage pan. Rearward crosslays to be double stacked. Crosslays to be 28" deep. | $4,063 |
| 3130-0441 | Upper TM pump module with double stacked double crosslays. Crosslays to hold 300' of 2.5" DJ hose. | $1,969 |

| Item No. | Description | |
|---|---|---|
| 3130-0442 | Upper SM pump module with single stacked triple crosslays and diamond plate storage pan. Rearward crosslay to hold 150' of 3" DJ hose. | $2,003 |
| 3130-0443 | Pump module. Includes 51" wide pump panel opening and running boards. Includes area forward of pump panel opening for (2) speedlays (stacked) lower storage compartments with push button latches. Includes modifications for 4x4 and plumbing applications as required. | $9,087 |
| 3130-0444 | Crosswalk module. Includes walkway storage compartments with push button latches running boards (1) dual lighted LED folding step each side and access handrails mounted on the pump module. Includes modifications for 4x4 and plumbing applications as required. | $1,793 |
| 3130-0445 | Pump module. Includes 39" wide pump panel opening and running boards. Upper SM pump module with single stacked double crosslays and open back storage pan. | $6,829 |
| 3130-0449 | Top mount eMAX pump module. Includes area for a double speedlay TM walkway (raised) with compartments dia plt running boards folding steps with integral lights and (2) vertical handrails. | $5,461 |
| 3130-0450 | Pump module top mount with speedlays. Includes 45" wide pump panel opening dunnage pan and running boards. Top mount walkway includes storage compartments with push button latches (1) 5" diamond plate top mount walkway step with gator grip each side and access handrails mounted on the pump module. Includes area for (3) speedlays - (2) with 1.5" plumbing and (1) with 2.5" plumbing. The front area of the speedlays to have a removable diamond plate panel with D-ring latches. | $11,110 |
| 3130-0451 | Pump module. Includes 57" wide pump panel opening and running boards. Upper SM pump module with single stacked triple crosslays backboard storage and diamond plate storage pan. Crosslays to be 65" high from ground. | $9,505 |
| 3130-0452 | Speedlay module. Includes area for (2) speedlays with dividers (1) area for backboard storage with hinged doors with latches lower storage compartments with D-ring latches and running boards. Speedlays to hold 250' of 1.75 each. | $3,459 |
| 3130-0453 | Crosswalk module. Includes walkway storage compartments with D-ring latches running boards (1) dual lighted LED folding step each side and access handrails mounted on the pump module. | $1,449 |
| 3130-0454 | Upper SM pump module with double stacked double crosslays and diamond plate storage pan. Crosslay divider to be adjustable side to side. | $1,843 |
| 3130-0455 | Pump module. Includes 51" wide pump panel opening and running boards. (Tradition style pump module see body layout). Includes area forward of pump panel opening for (2) speedlays (stacked) lower storage compartments with push button latches. | $8,555 |
| 3130-0456 | Upper TM pump module with double stacked single crosslay and backboard storage. | $2,666 |
| 3130-0457 | Upper SM pump module with single stacked double crosslay backboard storage and diamond plate open back storage pan. | $2,857 |
| 3130-0458 | Upper stainless steel pump module with single stacked quad crosslays and top open storage with treadplate flooring. Crosslay floors lowered to approximately 72" above ground. | $2,910 |
| 3130-0459 | Speedlay module to be mounted with backboard storage located forward. Two (2) latches shall be used to secure the doors. One (1) top and one (1) bottom. | $312 |
| 3130-0460 | Upper SM pump module with single stacked double crosslay backboard storage forward of crosslays and diamond plate open back storage pan. | $2,532 |
| 3130-0462 | Upper TM pump module with single stacked quad crosslays and backboard storage. Crosslay preconnects to be offset to driver side of module. | $3,708 |
| 3130-0464 | Upper SM stainless steel pump module with double stacked double crosslays for 1-1/2" DJ hose and top open storage with treadplate flooring. Width of each of the crosslay beds must be 6-1/2". | $1,486 |
| 3130-0465 | Upper SM pump module with quad single stacked crosslays and diamond plate storage pan. The rear crosslay is for dry hose storage. The (3) forward crosslays to be 5.5" wide and the rearward crosslay to be 6" wide. | $2,465 |
| 3130-0467 | Side Mount Pump Module. Includes area for double stacked double crosslay (notched dividers). Crosslay opening to be same as standard tradition triple crosslay design. | $972 |
| 3130-0468 | Upper SM pump module with double stacked single crosslay and diamond plate storage pan. 400' of 1.75" DJ | $1,863 |
| 3130-0469 | Upper SM pump module with quad single stacked crosslays and diamond plate storage pan. Rearward (2) crosslays to be 3" DJ dry lays. | $2,241 |
| 3130-0470 | Pump module top mount with single stack double crosslay double speedlay (9" wide) and diamond plate storage pan. Includes 45" wide pump panel opening and running boards. Top mount walkway storage compartments with push button latches (1) 5" diamond plate top mount walkway step with gator grip each side and access handrails mounted on the pump module. Deck gun to be located in channel centered in storage pan running front to back. Embossed diamond plate covers with D-ring latches (wired to door ajar switch) each side of deck gun channel covers to be reinforced and hinged to front. | $11,988 |
| 3130-0472 | Upper SM pump module with single stacked triple crosslay backboard storage and diamond plate storage pan. Rearward crosslay to be for 2.5" dry lay. Stoage pan to be open back style due to generator. | $4,063 |

| Item No. | Description | |
|---|---|---|
| 3130-0473 | Vertical speedlay module welded integral to front of pump enclosure. Includes 12" wide area for (2) speedlays. | $2,208 |
| 3130-0474 | Top mount eMAX pump module. Includes area for a double speedlay TM walkway (raised) with compartments dia plt running boards fixed walkway steps and (2) vertical handrails. | $5,461 |
| 3130-0475 | Upper TM pump module with triple stacked double crosslays. | $1,658 |
| 3130-0476 | Top mount SS eMAX pump module. Includes area for double speedlays TM walkway with compartments treadplate running boards with Bustin Tread inserts and (2) vertical hand rails. | $6,168 |
| 3130-0477 | Triple Speedlays with Enclosed Pump Panel Full Width Module. Includes 45" wide pump panel opening. Includes area for (3) speedlays and lower storage compartments with push button latches forward of pump panel opening. Backboard/stokes basket storage above the speedlays. Upper module area above the pump panel to have storage pan. | $18,604 |
| 3130-0480 | Upper SM pump module with single stacked double crosslay New York Hook storage with horizontal divider 8" off floor and diamond plate open back storage pan. | $2,857 |
| 3130-0481 | Pump module. Includes 51" wide pump panel opening and running boards. Upper SM pump module with single stacked triple crosslays backboard storage and diamond plate storage pan. Crosslays to be 72" high from ground. | $8,513 |
| 3130-0483 | Transverse Module (narrow). Locate forward of pump area. Includes a single compartment opening per side (with a shallow lower area and a transverse upper area with diamond plate flooring) and running boards. Upper area for triple crosslay forward (2) crosslays to be single stacked for 200' of 1.75 DJ hose per lay and rearward crosslay to be single stacked for 150-200' of 2.50" DJ hose. | $4,656 |
| 3130-0484 | Upper SM pump module with backboard storage and diamond plate storage pan. Backboard storage to be located forward of storage pan. Deck gun piping to be located forward center area of pan and just rearward of back board compartment. | $2,436 |
| 3130-0486 | Upper TM pump module with smooth plate storage pan. Side panels to be Zolatone gray. Storage pan to be painted black durabak. | $2,157 |
| 3130-0487 | Pump module. Includes 57" wide pump panel opening and running boards. Running boards to be painted black durabak. | $5,381 |
| 3130-0488 | Painted crosswalk area to includes all smooth plate and extrusion surfaces exposed to exterior in the crosswalk area (speedlay and pump module) to be painted job color. Does not include top facing exposed surfaces. | $2,505 |
| 3130-0489 | Crosswalk module. Includes walkway storage compartments with push button latches running boards (1) dual lighted LED folding step each side and access handrails mounted on the pump module. Compartment doors to be painted job color. Crosswalk and running boards to be painted durabak black. | $1,939 |
| 3130-0491 | Upper SM stainless steel pump module with single stacked triple crosslays and top open storage with treadplate flooring. Capacities of 300' 200' and 200' of hose for selected discharges. | $2,079 |
| 3130-0492 | Pump module. Includes 45" wide pump panel opening and running boards. Upper SM pump module with single stacked double crosslays with diamond plate storage pan. Crosslays to be 72" high from ground. | $6,849 |
| 3130-0493 | Speedlay module full width with stokes basket and backboard storage. Includes area for (2) speedlays: (2) 1.5" side by side speedlay storage compartments. Upper area of module shall have (2) adjustable dividers to hold (1) stokes basket and (2) backboards. Includes vertically hinged smooth plate door(s) with push button latches. | $4,380 |
| 3130-0494 | Upper TM pump module with a transverse storage compartment with aluminum tread plate vertical hinged doors (1) each end of the compartment and a embossed tread plate top. | $2,108 |
| 3130-0495 | Enclosed Pump Module with Double Speedlays. Includes 47.5" wide pump panel opening. Includes area for (2) stacked speedlays lower storage compartments with push button latches forward of pump panel opening. Upper module area to have storage pan. | $18,259 |
| 3130-0496 | Upper SM pump module. Crosslay area to be: (2) compts 4.5" at base (1) compt 4.75" at base and (1) compt 7.5" at base. Ensure that each crosslay is wide enough to accommodate the nozzles so they are easily deployed for each side. Backboard storage and diamond plate storage pan. Crosslays to be 28" deep. | $4,414 |
| 3130-0497 | Upper TM pump module with modified sides for improved visibility and diamond plate storage pan. | $2,266 |
| 3130-0499 | Upper stainless steel pump module with single stacked quad crosslays and top open storage with treadplate flooring. Crosslay floors located approximately 75" above ground. Top mount pump module only. | $2,910 |
| 3130-0500 | Upper SM pump module with forward (2) crosslays to be single stack and rearward crosslay to be double stack includes diamond plate storage pan. | $4,175 |
| 3130-0501 | Upper SM pump module with single stacked quad crosslays and diamond plate storage pan. Crosslays to be 28" deep due to additional capacity. | $2,679 |
| 3130-0503 | Crosswalk module. Includes running boards (1) intermediate style step each side and access handrails mounted on the pump module. Crosswalk intermediate steps and running boards to be 3/16" aluminum treadplate plate. | $1,282 |

| Item No. | Description | |
|---|---|---|
| 3130-0504 | Speedlay module. Includes area for (2) speedlays 15" front to rear with center divider curt to a height of 24" lower storage compartments with push button latches and running boards. | $2,321 |
| 3130-0505 | Pump module top mount with speedlays. Includes 45" wide pump panel opening dunnage pan and running boards. Top mount walkway includes storage compartments with push button latches (1) 10" diamond plate top mount walkway step with gator grip each side and access handrails mounted on the pump module. Includes area for (3) speedlays - (2) with 1.5" plumbing and (1) with 2.5" plumbing. The front area of the speedlays to have a removable diamond plate panel with D-ring latches. | $11,636 |
| 3130-0506 | Pump module. Includes 63" wide pump panel opening and running boards. Upper SM pump module with double stacked double crosslays with diamond plate storage pan. The hose to be in three (3) poly trays of 200' each. The module to be stepped up rearward of the crosslays. | $6,849 |
| 3130-0507 | Crosswalk module. Includes walkway storage compartments with push button latches running boards (1) dual lighted LED folding step each side and access handrails mounted on the pump module. The crosswalk shall be raised to accommodate storage of (2) backboards. | $1,607 |
| 3130-0510 | Pump module top mount with speedlays. Includes 51" wide pump panel opening and running boards. Includes area forward of pump panel opening for (2) speedlays (stacked). Includes crosswalk module and walkway storage compartments with push button latches (1) dual lighted LED folding step each side and access handrails mounted on the pump module. | $10,752 |
| 3130-0511 | Pump module. Includes 39" wide pump panel opening with integral double speedlays and running boards. Upper SM pump module with double stacked single crosslay and diamond plate storage pan. | $10,932 |
| 3130-0512 | Enclosed triple vertically stacked speedlays with trays 14" wide capacities to be for the selected size preconnect discharges. Speedlay assembly welded integral to the front of SS pump enclosure. For use with enclosed side pump panels with special WB dimension added to create space for door openings. (Actual WB dimension for this application is 22".) | $2,427 |
| 3130-0513 | Transverse full width module (24" wide) with full height doors. Located behind cab and stands alone. Includes a single compartment opening per side (with approximately 27" deep lower area and a transverse upper area). | $4,114 |
| 3130-0514 | Upper SM pump module with single stacked triple crosslays and transverse storage area rearward of deckgun channel with stainless steel lift-up doors with push button latches. (1) On driver and (1) on officer side. | $2,810 |
| 3130-0515 | Pump module top mount with speedlays. Includes 45" wide pump panel opening dunnage pan and running boards. The crosswalk shall be raised 3". The area directly below the crosswalk walkway shall include five (5) compartments one (1) each side for storage in the lower area and a horizontal storage directly under the walkway surface with three (3) compartments. | $11,794 |
| 3130-0516 | Pump module - one piece. Includes 49.5" wide pump panel opening includes smooth plate aluminum painted black Durabak with gator grip for running boards. | $5,039 |
| 3130-0517 | Double stacked 15"D triple crosslays and aluminum smooth plate storage pan painted black durabak. (2) 7.5" wide each to hold 250'-1.75"DJ & (1) 10.5" wide to hold 200'-2.5"DJ. | $2,375 |
| 3130-0518 | Crosswalk module. Includes walkway storage compartments with D-ring latches running boards (1) dual lighted LED folding step each side and access handrails mounted on the pump module. | $1,449 |
| 3130-0519 | Pump module for top mount enclosed operation. Includes 45" panel opening and area for single stacked double crosslay and deck gun channel. Module has sanded finish and crosslay floors are slotted for draining. | $9,746 |
| 3130-0520 | Upper SM pump module with double stacked double crosslays and transverse storage area. Transverse storage area to be rearward crosslays. Includes horizontally hinged diamond plate doors with thumb latches doors to be hinged at top. Each crosslay to accommodate (1) removable poly tray (removable tray(s) sold separately). | $3,265 |
| 3130-0522 | Upper SM pump module with double stacked triple crosslay deck gun channel and backboard storage. The rear crosslay is for dry hose storage. | $2,612 |
| 3130-0523 | Side mount pump module. Extruded aluminum with runningboards. | $5,039 |
| 3130-0524 | Top mount pump module with 20" walkway. Extruded aluminum with runningboards and formed side access steps. | $6,005 |
| 3130-0525 | Top mount pump module with walkway and integral double speedlays (9" W). Extruded aluminum with runningboards. Includes formed walkway access steps. | $7,441 |
| 3130-0526 | Top mount pump module with walkway and integral triple speedlays (13" W). Extruded aluminum with runningboards. Includes formed walkway access steps. Each 1.5" speedlay will have capacity for up to 200 ft. of 1-3/4" hose. The 2.5" speedlay (if selected) will have capacity for 150 ft. of 2.5" hose. | $7,906 |
| 3130-0527 | Upper SM pump module with 8" channel forward for turret 2.5" single stacked single crosslay and diamond plate storage pan. | $2,121 |
| 3130-0528 | Upper SM pump module with single stacked triple crosslays and diamond plate storage pan. Crosslay 3 to be a dead lay. | $1,863 |

| Item No. | Description | |
|---|---|---|
| 3130-0529 | Enclosed Pump Module with Double Speedlays. Includes 40.5" wide pump panel opening. Includes area for (2) stacked speedlays lower storage compartments with D-handle latches forward of pump panel opening. Upper module area to have storage pan. | $18,259 |
| 3130-0530 | A side mount pump module with triple crosslays. The module shall have overall dimensions of 70"H x 72"W (not including runningboards) x 49"L (front to rear). | $7,366 |
| 3130-0542 | Speedlay module. Includes area for (2) speedlays with divider forward (1) area for four (4) pike pole storage tubes to accommodate 6' pike poles in rearward lower area of module staggered two tubes on forward compartment wall and two tubes on rearward compartment wall. Upper area of rearward storage area over the pike poles there shall be a shovel storage compartment in remaining space which is open to the top of module when lid on top is opened. There shall be a bolt in divider between the pike pole storage and the upper shovel area. There shall be a hinged door on officer side only of rearward upper pike and shovel storage area with 2 push button latches lower storage compartments with push button latches and running boards. All storage doors shall be wired to door ajar circuit in accordance with NFPA. | $3,656 |
| 3130-0543 | Upper SM pump module with 2.5" double stacked single crosslay and diamond plate storage pan. 250' of 2.50" DJ | $1,863 |
| 3130-0544 | Triple vertically stacked speedlays for top console 12" wide (no trays) capacities to be for the selected size preconnect discharges. Speedlay assembly welded integral to the front of SS pump enclosure. Bustin Tread in side running boards of speedlay area. | $2,319 |
| 3130-0545 | Upper SM pump module with single stacked triple crosslay backboard storage and diamond plate storage pan. | $3,015 |
| 3130-0546 | Crosswalk module. Includes stainless steel walkway storage compartments with lift-up access lids and butterfly latches non-skid running boards with Bustin Tread and access hand rails mounted one each side to the front of the pump enclosure assembly. | $2,456 |
| 3130-0547 | Stainless steel 50" wide lower pump module. Includes side running boards with Bustin Tread inserts. | $4,778 |
| 3130-0548 | Upper SM stainless steel pump module with (2) triple stacked crosslays and top open storage with treadplate flooring. | $1,553 |
| 3130-0549 | Upper SM stainless steel pump module with (3) crosslays in both single and double stacks and top open storage with treadplate flooring. | $1,804 |
| 3130-0550 | Upper TM stainless steel pump module with (2) triple stacked crosslays. | $1,707 |
| 3130-0551 | Upper TM stainless steel pump module with (3) crosslays in both single and double stacks. | $1,957 |
| 3130-0554 | Pump module. Includes 39" wide pump panel opening and running boards. Upper SM pump module with double stacked double crosslays and transverse storage area. Transverse storage area to be rearward crosslays. Includes horizontally hinged diamond plate doors with push button latches. Each crosslay to accommodate (1) removable poly tray (trays not included). | $8,302 |
| 3130-0555 | Pump module. Includes 41" wide pump panel opening and running boards. Upper SM pump module with diamond plate storage pan and forward transverse compartment with double stacked double crosslays. Crosslays to be 12" wide and 15" deep. | $11,695 |
| 3130-0556 | Upper TM stainless steel pump module with single stacked double crosslays and a transverse storage compartment with top open storage (if space available) with treadplate flooring. | $2,666 |
| 3130-0557 | Stainless steel 70" wide lower pump module. Includes side running boards with Bustin Tread. This size is used for some big Industrial type foam systems. | $5,039 |
| 3130-0558 | Upper SM pump module with double stacked triple crosslays. | $1,567 |
| 3130-0560 | Pump module. Includes 45" wide pump panel opening and running boards. Includes area forward of pump panel opening for (2) stacked speedlays and (1) upper speedlay (crosslay style) lower storage compartments with push button latches. | $10,802 |
| 3130-0561 | Upper TM pump module with single stacked single crosslay and backboard storage. | $3,733 |
| 3130-0562 | Crosswalk module. Includes running boards. The crosswalk shall be raised 8". (1) Dual lighted LED folding step each side and access handrails mounted on the pump module. | $1,158 |
| 3130-0563 | Top mount eMAX pump module for use with a (2) arm ladder rack. Includes area for a double speedlay TM walkway (raised) 21" front to rear without compartments dia plt running boards folding steps with integral lights and (2) vertical handrails. | $5,461 |
| 3130-0565 | Upper SM pump module with triple crosslays and diamond plate storage pan. Forward (2) crosslays to be single stack and rearward crosslay to be double stack. | $2,126 |
| 3130-0566 | Speedlay module. Includes area for (2) speedlays (1) area for backboard storage and Little Giant ladder with hinged doors with latches lower storage compartments with push button latches and running boards. | $2,909 |
| 3130-0568 | Pump module. Includes 45" wide pump panel opening and running boards. Upper SM pump module with double stacked triple crosslays with diamond plate storage pan. | $6,849 |
| 3130-0569 | Upper TM pump module with 2.5" single stacked single crosslay. | $1,788 |

| Item No. | Description | |
|---|---|---|
| 3130-0570 | eMAX Tanker Pump module. Includes enclosed pump panel compt on officer side (opposite pump panel) lower and upper storage areas center front pump access doors removable center floor in upper area storage pan. Lower storage area to hold (1) tray for 200' of 1.75" DJ preconnected hose and (1) tray for 200' of 2.5" DJ preconnected hose. Upper storage area to hold (1) tray for 200' of 1.75" DJ preconnected hose offset to rear and storage area for (2) backboards vertically stored offset forward w/sleeve each side of center pump access. | $8,484 |
| 3130-0571 | Upper TM pump module with double stacked single crosslay and pike pole storage. | $2,666 |
| 3130-0572 | Top mount pump module with 19" walkway. Extruded aluminum with runningboards. | $6,005 |
| 3130-0573 | Transverse module (18" wide) with brushed stainless steel doors. Located forward of pump area and welded integral. Includes a single stainless steel compartment opening per side (with a shallow lower area and a transverse upper area) and side running boards with Bustin Tread. | $2,373 |
| 3130-0574 | Transverse Module (narrow) 24.5. Locate forward of pump area. Includes a single compartment opening per side (with a shallow lower area and a transverse upper area with diamond plate flooring) and running boards. | $2,346 |
| 3130-0575 | Transverse Module (full width). Locate forward of pump area. Includes a single compartment opening per side (with a shallow lower area and a transverse upper area with diamond plate flooring). Upper area for double stacked double crosslay. | $3,994 |
| 3130-0577 | Upper TM pump module with double crosslays. Forward crosslay to be double stacked and rearward crosslay to be dry lay for storage to include (2) pike pole tubes for 6' pike poles located on the rearward wall. | $2,642 |
| 3130-0578 | Speedlay module. Includes a lower double preconnect storage area upper preconnect storage area sleeve in upper storage area for (2) backboards (vertically stored offset forward) lower storage compartments with push button latches and running boards. | $3,376 |
| 3130-0579 | Pump module. Includes 51" wide pump panel opening and running boards. Upper SM pump module with (4) single stacked single crosslays with diamond plate storage pan. Crosslays to be 66" high from ground. | $6,849 |
| 3130-0580 | Top mount eMAX pump module. Includes area for a double speedlay TM walkway (raised) with compartments with embossed diamond plate lift-up walkway lids (includes gas shock(s) as required to hold the lids open with butterfly style latch(es) for securing in the closed position). Comparments to be large as possible and include (1) light (match body compartmnets for brand and type of light) door ajar indicator wiring. Outboard sides of walkway to have diamond plate panels. Dia plt running boards Gator Grip fixed walkway steps and (2) vertical handrails. | $6,301 |
| 3130-0581 | Upper SM pump module with double stacked double crosslay backboard storage and diamond plate storage pan. | $2,684 |
| 3130-0586 | Pump module. Includes 45" wide pump panel opening and running boards. Upper SM pump module with 1.5" single stacked double crosslays 71" from ground 2.5" double stack single dry crosslay stepped up 7" from double crosslay and diamond plate storage pan. | $8,744 |
| 3130-0587 | Pump module. Includes 45" wide pump panel opening and running boards. Upper SM pump module with single stacked double crosslays backboard storage and open back storage pan. Crosslays and backboard storage to be stepped down 8". | $7,570 |
| 3130-0588 | Pump module. Includes 45" wide pump panel opening and running boards. Upper SM pump module with single stacked double crosslays backboard storage and open back storage pan. | $7,570 |
| 3130-0589 | Transverse Module (full width). Locate forward of pump area. Includes a single compartment opening per side (with a shallow lower area and a transverse upper area with smooth plate flooring). | $3,073 |
| 3130-0590 | Transverse module to hold: Four (4) shoreboards 48" x 92" on edge. | $1,279 |
| 3130-0591 | Transverse Module (narrow). Locate forward of pump area. Includes Upper and Lower compartment openings each side of module a 3" extrusion located between upper and lower openings. The separate lower "tool style" compartment on each side of module shall be shallow with diamond plate flooring and include a diamond plate door with D-ring door latch. The upper transverse storage area shall include a diamond plate floor that shall extend out to the 3" extrusion which separates the upper and lower compartment openings. | $4,750 |
| 3130-0592 | Speedlay module. Includes area for triple speedlays with divider(s) and lower storage compartments with push button latches and running boards. The side facing tool compartment doors along with the front and rear facing panels are to be smooth plate and painted gray Zolatone. Running boards to include gator grip and be painted black Durabak. | $3,289 |
| 3130-0593 | Upper TM pump module with smooth plate side panels painted job color and smooth plate storage pan painted black Durabak. | $2,070 |
| 3130-0594 | Pump module. Includes 45" wide pump panel opening and running boards. The front access door and the front panels to be smooth plate and painted gray Zolatone. Running boards to include gator grip and be painted black duraback. Used on TM module only. | $6,300 |
| 3130-0595 | Upper SM pump module with double stacked quad crosslays and no storage pan. Crosslays to be 23" deep. For use on narrow 39" module only with applications approval that no pump panel will be utilized on upper module. | $2,654 |

| Item No. | Description | |
|---|---|---|
| 3130-0597 | Transverse Module (narrow). Locate forward of pump area. Includes a single compartment opening per side (with a shallow lower area and a transverse upper area with diamond plate flooring) and running boards. Upper area for triple crosslay forward (2) crosslays to be single stacked for 200' of 2.00" DJ hose per lay and rearward crosslay to be single stacked for 150' of 2.50" DJ hose. | $4,656 |
| 3130-0598 | Pump module. Includes 51" wide pump panel opening and running boards. Upper SM pump module with single stacked double crosslays backboard storage and diamond plate storage pan. Crosslays to be @ 72" high from ground. | $8,135 |
| 3130-0599 | Crosswalk module. Includes walkway storage compartments with push button latches running boards (1) dual lighted LED folding step each side and access handrails mounted on the pump module. Diamond plate walkway plate to be 21" wide due to 2-door Freightliner DEF tank. | $1,449 |
| 3130-0601 | Pump module. Includes 51" wide pump panel opening and running boards. Upper SM pump module with double stacked triple crosslays with diamond plate storage pan. Crosslays to be 70" high from ground. Front headboard of module to be lowered 10" and provisions added to mount crosslay cover forward of deck gun channel. | $7,158 |
| 3130-0602 | Dunnage pan notch. Located in the pump module. Pan to have a notch on the rear wall for the ladders to extend into. | $271 |
| 3130-0604 | Upper SM pump module with double stacked double crosslay backboard storage and diamond plate storage pan. | $2,658 |
| 3130-0605 | Pump module. Includes 51" wide pump panel opening and running boards. Upper SM pump module with double stacked triple crosslays single stack depth for extra capacity with diamond plate storage pan. Crosslays to be 70" high from ground. | $7,454 |
| 3130-0606 | Upper SM stainless steel pump module with double stacked double crosslays for 1-1/2" DJ hose and top open storage with treadplate flooring. Width of each of the crosslay beds must be 6-1/2". Crosslay height to be aprox. 65" from ground. | $1,742 |
| 3130-0607 | Upper SM pump module with single stacked triple crosslays and enclosed storage compartment with vertical hinged (rearward) diamond plate access door (1) each side and a bolt-on diamond plate top. Inside compartment will be a vertical partition centered in the opening and a full width adjustable shelf forward of the patition. | $4,032 |
| 3130-0608 | Top mount eMAX pump module for use with a (2) arm ladder rack. Includes area for a raised double speedlay TM walkway (raised) 21" front to rear diamond plate access doors without compartments dia plt running boards folding steps with integral lights and (2) vertical handrails. For use with 4X4 application. | $5,461 |
| 3130-0609 | Pump module top mount with speedlays. Includes 45" wide pump panel opening dunnage pan and running boards. The crosswalk shall be raised 3". The area directly below the crosswalk walkway shall include three (3) compartments one (1) each side for storage in the lower area and a horizontal transverse backboard storage directly under the walkway surface with an access door on both sides of the module. (1) 14" diamond plate top mount walkway step with gator grip each side and access handrails mounted on the pump module. Includes area for two (2) speedlays with 1.5" plumbing one (1) discharge swivel to either side of the body. The front area of the speedlays to have a removable diamond plate panel with D-ring latches. | $11,430 |
| 3130-0610 | Heat shield. Locate below diamond plate walkway top. | $136 |
| 3130-0612 | Upper SM pump module with storage for (2) New York Hook pike poles and diamond plate storage pan. | $2,532 |
| 3130-0613 | Pump module. Includes 57" wide pump panel opening and running boards. Upper SM pump module with double stacked double crosslays backboard storage and diamond plate storage pan. Crosslays to be no higher than 68" from ground. | $7,227 |
| 3130-0614 | Pump module top mount with 39" wide pump panel opening triple sgl stack crosslays rear of TM panel and integral walkway with compartments. Includes dia plt running boards. | $8,453 |
| 3130-0615 | Upper SM stainless steel pump module with double stacked quad crosslays with top open storage with treadplate flooring. | $1,991 |
| 3130-0616 | Pump module top mount with speedlays. Includes 45" wide pump panel opening and running boards. Includes area forward of pump panel opening for (2) speedlays (stacked). Includes crosswalk module and walkway storage compartments with push button latches (1) dual lighted LED folding step each side and access handrails mounted on the pump module. | $10,090 |
| 3130-0617 | Upper SM pump module with single stacked triple crosslays and rear of the crosslays a Double Stacked Dry Lay. | $3,996 |
| 3130-0618 | Crosswalk module. Includes walkway storage compartments with push button latches running boards (1) dual lighted LED folding step each side and access handrails mounted on the pump module. The crosswalk shall be raised to accommodate storage of (1) backboard. | $1,607 |
| 3130-0619 | Pump module. Includes 51" wide pump panel opening integral walkway and running boards. Includes area forward of pump panel opening for (2) speedlays (stacked) lower storage compartments with push button latches (1) dual lighted LED folding step each side and access handrails mounted on the pump module. | $10,514 |

| Item No. | Description | |
|---|---|---|
| 3130-0620 | One (1) diamond plate gator grip step each side of TM walkway in place of the standard folding step. | $226 |
| 3130-0623 | Pump module. Includes 39" wide pump panel opening with integral double speedlays and running boards. Upper SM pump module with diamond plate storage pan. | $10,932 |
| 3130-0624 | Top Mount Enclosed Pump Module. Includes 39" panel opening and area directly below the top mount controls for a double stacked double speedlay with removable aluminum trays stacked side by side lower storage compartments with push button latches and running boards. The upper module will include a storage pan. | $10,862 |
| 3130-0626 | Pump module top mount with better visability and with speedlays. Includes 45" wide pump panel opening dunnage pan and running boards. Top mount walkway includes storage compartments with push button latches (1) dual lighted LED folding step each side and access handrails mounted on the pump module. Includes area for (3) speedlays - (2) with 1.5" plumbing and (1) with 2.5" plumbing. | $11,419 |
| 3130-0627 | Pump module. Includes 51" wide pump panel opening and running boards. Upper SM pump module with double stacked double crosslays with diamond plate storage pan. Crosslays to be 66" high from ground. | $6,812 |
| 3130-0628 | Pump module top mount with better visability and with speedlays. Includes 45" wide pump panel opening dunnage pan and running boards. Top mount walkway includes storage compartments with push button latches (1) dual lighted LED folding step each side and access handrails mounted on the pump module. Includes area for (3) speedlays - (2) with 1.5" plumbing and (1) with 2.5" plumbing. Each speedlay to have a 200' capacity of hose. | $11,419 |
| 3130-0629 | Upper SM pump module with single stacked double crosslay cribbage storage and diamond plate storage pan. Cribbage storage to be a minimum 4" clear opening (including latch). | $2,789 |
| 3130-0630 | Upper SM pump module with double stacked triple crosslays (single stacked depth) and rear of the crosslays a single stacked Dry Lay. | $3,996 |
| 3130-0632 | Upper SM pump module with diamond plate storage pan and storage compartment. Storage compartment located forward of storage pan. Includes (1) full height adjustable divider and vertically hinged stainless steel door each side and push button latches. | $4,812 |
| 3130-0633 | Upper stainless steel pump module with single stacked triple crosslays and top open storage with treadplate flooring. Crosslay floors lowered to approximately 66" above ground. Crosslay plumbing terminates at side panels below beds. | $2,910 |
| 3130-0637 | Double vertically stacked speedlays for use with removable trays 9.5" wide capacities to be for the selected size preconnect discharges. Includes (1) crosslay at top above speedlays. Module assembly welded integral to the front of SS pump enclosure. Actual module width 13". | $2,920 |
| 3130-0639 | Pump module one piece. Includes 39in. wide pump panel opening and running boards. Upper SM pump module with single stacked double cross lays and a transverse storage located rearward of cross lays equipped with boxed out lift up tread lids on both sides to accommodate storage of up to a 86in. length stokes basket and a nested back board. Boxed out doors to have D-ring latches Stainless steel staked hinges and hold open device(s) and be designed to lift up high enough to easily deploy equipment from below. Door to be tied to door ajar circuit in cab. Upper module to be raised to also accommodate a dunnage pan. | $8,364 |
| 3130-0640 | Enclosed Pump Module with Double Speedlays. Includes 40.5" wide pump panel opening. Includes area for (2) stacked speedlays lower storage compartments with D-handle latches forward of pump panel opening. Upper module area to have storage pan. | $18,259 |
| 3130-0641 | Top mount pump module with 20" walkway and running boards. Includes area forward of pump panel opening for (2) speedlays (stacked) lower storage compartments with push button latches. | $8,556 |
| 3130-0643 | Interior of Backboard Storage compartment shall include gray zoloatone on floor sides and top of storage enclosure. Floor of compartment to include a composite material overlay. | $711 |
| 3130-0644 | Full Width Speedlay module. Includes a lower double preconnect storage area upper preconnect storage area full width storage pan and lower storage compartments with push button latches. | $3,836 |
| 3130-0645 | LINE-X package for side mount pump module: Includes exterior surfaces of all running boards (including speedlay running boards if applicable) integral running board platforms (underbody style not included) exterior surface of runningboard trays and lids intermediate steps and all fabricated mounting plates installed under the module or body for plumbing options like drains bleeders etc. as applicable. | $460 |
| 3130-0646 | LINE-X package for top mount pump module: Includes exterior surfaces of all running boards (including speedlay running boards if applicable) exterior surface of runningboard trays and lids intermediate steps and all fabricated mounting plates installed under the module or body for plumbing options like drains bleeders stirrup style switch etc. as applicable. Also includes walkway and walkway steps. | $873 |
| 3130-0647 | Top mount eMAX pump module. Includes area for a single 2.5" speedlay with 200' capacity TM walkway (raised) with compartments dia plt running boards folding steps with integral lights and (2) vertical handrails. | $5,461 |
| 3130-0648 | Top mount pump module with walkway and integral double speedlays (11" W). Extruded aluminum with runningboards. Includes formed walkway access steps. | $7,441 |

| Item No. | Description | |
|---|---|---|
| 3130-0649 | LINE-X for embossed diamond plate panel to be located above speedlays forward of top mount pump panel area. | $258 |
| 3130-0650 | Raised crosswalk module. Includes 8" raise with 5" high storage compartment with drop down diamond plate doors with push button latches. | $1,355 |
| 3130-0651 | Top mount pump module with walkway and integral double speedlays (11" W). Extruded aluminum with runningboards. Includes formed walkway access steps. | $7,441 |
| 3130-0654 | Upper SM stainless steel pump module without crosslays. Side access open storage only with treadplate flooring. Includes (1) full width lift up door drivers side and (1) vertically hinged backboard door officer side. | $2,801 |
| 3130-0655 | Raised walk surface on optioned module with integrated cross walk module. Includes additional structure for 8 in. raise with 5 in. high transverse storage compartment with drop down diamond plate doors with push button latches. Compartment to be sleeved to allow for un-specified dry storage. | $1,355 |
| 3130-0657 | Pump module. Includes 39" wide pump panel opening and running boards. Includes area forward of pump panel opening for (2) stacked speedlays and (1) upper speedlay (crosslay style) lower storage compartments with push button latches. | $10,802 |
| 3130-0659 | Pump module. Includes 45" wide pump panel opening with integral double speedlays and running boards. Upper SM pump module with double stacked single crosslay tool compartment each side below speedlay and diamond plate storage pan. | $10,932 |
| 3130-0662 | Transverse Module (narrow). Locate forward of pump area. Includes a single compartment opening per side (with a shallow lower area and a transverse upper area with diamond plate flooring) and running boards. Upper area for double stacked triple crosslay. Crosslay 3 to be a dead lay. | $4,871 |
| 3130-0664 | Upper SM stainless steel pump module with (3) crosslays in double stacks and top open storage with treadplate flooring. | $1,804 |
| 3130-0665 | Upper TM stainless steel pump module with (3) crosslays in double stacks. | $1,957 |
| 3130-0668 | Stainless steel 62" wide lower pump module. Includes side running boards with Bustin Tread. This size required for most CAFS units. | $5,039 |
| 3130-0669 | Top mount pump module with 20" walkway 12" W tool compartment opening and integral double speedlays (9" W). Extruded aluminum with runningboards. Includes full width formed walkway access steps. | $7,441 |
| 3130-0670 | Upper SM pump module with single stacked triple crosslay area (4.25/4.25/6") and diamond plate storage pan. Rearward crosslay is to be a dry lay to hold 150' of 3" DJ (1" wider than standard). Forward crosslay areas are for up to 200' of 2" DJ each. | $2,106 |
| 3130-0672 | Pump module for side mount enclosed operation. Includes 52.5" panel opening and area for double stacked triple crosslay. Module has sanded finish and crosslay floors are slotted for draining. Pump module to be full width. | $12,204 |
| 3130-0673 | Upper SM stainless steel pump module with single stacked double crosslays and double stacked dead lay for LDH hose. Top open storage with treadplate flooring. | $1,863 |
| 3130-0675 | Upper stainless steel pump module with single stacked double crosslays and top open storage with treadplate flooring. Crosslay floors lowered to approximately 66" above ground. Crosslay plumbing terminates at side panels below beds. Crosslay 1 and crosslay 2 on the officer side. | $2,910 |
| 3130-0676 | Door at officer side upper pump panel for dunnage compartment access Locate directly rearward of the crosslay beds with forward hinged vertical access door 17.5" wide x 31" tall and push button trigger latch. | $256 |
| 3130-0678 | Top mount pump module with 20in. walkway. Extruded aluminum with running boards and LED lighted folding side access steps. | $6,005 |
| 3130-0679 | Side mount panel for lever controls IPO push pull handles. | $1,472 |
| 3130-0680 | Durabak package for side mount pump module: Includes exterior surfaces of all running boards (including speedlay running boards if applicable) exterior surface of runningboard trays and lids intermediate steps and all fabricated mounting plates installed under the module or body for plumbing options like drains bleeders stirrup style switch etc. as applicable. | $460 |
| 3130-0681 | Durabak package for top mount pump module: Includes exterior surfaces of all running boards (including speedlay running boards if applicable) exterior surface of runningboard trays and lids intermediate steps and all fabricated mounting plates installed under the module or body for plumbing options like drains bleeders stirrup style switch etc. as applicable. Also includes walkway and walkway steps. | $873 |
| 3130-0682 | Upper SM stainless steel pump module with double stacked double crosslays and top open storage with treadplate flooring. Each bed to hold up to 200' of double jacket hose for the selected discharges. | $1,486 |
| 3130-0684 | Top mount pump module with walkway and integral double speedlays (9" W). Extruded aluminum with runningboards. Includes formed walkway access steps. | $7,441 |
| 3130-0688 | Stainless steel 65" wide lower pump module. Includes side running boards with Bustin Tread. This size required for most CAFS units. | $5,039 |

| Item No. | Description | |
|---|---|---|
| 3130-0689 | Top mount pump module with walkway and integral double speedlays (11" W). Extruded aluminum with runningboards. Includes formed walkway access steps. | $7,441 |
| 3130-0691 | Upper stainless steel pump module with double stacked triple crosslays and top open storage with treadplate flooring. Crosslay floors lowered to approximately 71" above ground. | $2,910 |
| 3130-0692 | Pump module modification for lowered crosslays accessed from the ground. Front headboard of module to be lowered and provisions added to mount crosslay cover forward of deck gun channel. See body layout. | $413 |
| 3130-0693 | Upper SM stainless steel pump module with double stacked double crosslays and a backboard plus top open storage with treadplate flooring. Crosslay capacity of 300' of 1.75" hose per bed. | $2,532 |
| 3130-0694 | Upper stainless steel pump module with single stacked triple crosslays and top open storage with treadplate flooring. Crosslay floors lowered to approximately 64" above ground. | $2,910 |
| 3130-0696 | Upper SM pump module with single stacked triple crosslay and diamond plate storage pan. Forward (2) crosslay to be 6" wide and the rearward crosslay to be 6.75" wide. | $4,565 |
| 3130-0697 | Enclosed Side Mount Pump Module with 17" wide integral preconnect area located forward of pump panel. Includes tool compartment each side below the forward preconnect area and running boards. | $14,625 |
| 3130-0700 | Upper SM stainless steel pump module with double stacked double crosslays and a backboard plus top open storage with treadplate flooring. Crosslay capacity of 300' of 1.75" hose per bed. Crosslay floors lowered to approximately 71" above ground. | $2,927 |
| 3130-0701 | Side Mount Pump Module with 11" wide integral preconnect storage area located forward of pump panel. Includes tool compartment each side below the forward preconnect storage area and running boards. | $8,814 |
| 3130-0702 | Top mount eMAX pump module. Includes area for a double speedlay TM walkway (raised) with compartments dia plt running boards folding steps with integral lights and (2) vertical handrails. The walkway shall be raised and stretched to accommodate storage of (2) backboards. | $5,976 |
| 3130-0703 | Upper SM stainless steel pump module without crosslays. Transverse storage compartment 20" wide x 24" high with mid-point shelf at front of the enclosure with ADT cover. (1) door actuated light at each door opening. (2) vertical rearward hinged box pan fully gasketed doors with d-ring latches and gas tube hold opens. Wire to door adjar indicator in cab. A full height vertical partition installed 2.5" from the rear wall to provide space for backboard storage. Shelf installed forward of partition at mid-height to permit storage of high rise pack on bottom and long handle tools on top. Top open storage rearward of the transverse compartment with treadplate flooring. Outer door panel finish to match side pump panel finish. | $3,422 |
| 3130-0704 | Pump module. Includes 39" wide pump panel opening with integral double speedlays and running boards. Upper SM pump module with double stacked single crosslay tool compartment each side below speedlay and diamond plate storage pan. | $10,932 |
| 3130-0705 | Pump module. Includes 63" wide pump panel opening and running boards. Upper SM pump module with double stacked triple crosslays extra capacity with diamond plate storage pan. Crosslays to be 68" high from ground. Front headboard of module to be lowered 15" and provisions added to mount crosslay cover. | $7,295 |
| 3130-0706 | Upper SM pump module with double stacked double crosslays and diamond plate storage pan. Rear crosslay to be plumbed 2.5" with opening for 3" DJ hose. | $1,736 |
| 3130-0709 | Pump panels to be recess mounted in the pump module by approximately 2" each side of body. | $512 |
| 3130-0713 | Pump module modification for lowered crosslays accessed from the ground. Front headboard of module to be lowered and provisions added to mount crosslay cover forward of deck gun channel. See body layout. | $413 |
| 3130-0714 | Removable boxed out upper speedlays. The rear area of the two (2) upper speedlays are to be boxed out with a removable back wall to reduce the width of the speedlays. Both upper speedlays are to have 7" of clear opening front to rear including forward speedlay roller. | $607 |
| 3130-0716 | Top mount eMAX pump module. Includes area for a double speedlay TM walkway (raised) without compartments (access doors ONLY for CAFS system) dia plt running boards folding steps with integral lights and (2) vertical handrails. | $5,461 |
| 3130-0720 | Side Mount Pump Module with 13" wide integral preconnect area located forward of pump panel. Includes tool compartment each side below the forward preconnect area and running boards. | $9,054 |
| 3130-0721 | Side Mount Pump Module with 15" wide integral preconnect area located forward of pump panel. Includes tool compartment each side below the forward preconnect area and running boards. | $9,294 |
| 3130-0722 | Side Mount Pump Module with 9" wide integral preconnect area located forward of pump panel. Includes tool compartment each side below the forward preconnect area and running boards. | $8,574 |
| 3130-0727 | Top Mount Enclosed Pump Module with 19" wide integral preconnect area located forward of pump panel. Includes tool compartment each side below the forward preconnect area and running boards. | $9,774 |
| 3130-0728 | Top Mount Enclosed Pump Module. Extruded aluminum with runningboards. | $8,574 |

| Item No. | Description | |
|---|---|---|
| 3130-0730 | The side mount pump module shall be enclosed with roll up doors on both sides. Roll up doors added seperately. | $4,196 |
| 3130-0731 | Enclosed triple vertically stacked speedlays 15" wide for use with trays (selected separately). Capacities to be 250' for the selected size preconnect discharges. Speedlay assembly welded integral to the front of SS pump enclosure. For use with enclosed side pump panels. Overall additional width adds 22" to the wheelbase. | $2,427 |
| 3130-0732 | Enclosed Pump Module with Triple Speedlays vertical stacked. Includes 45" wide pump panel opening. Includes preconnect area for (3) 1.5" speedlays lower storage compartments forward of pump panel opening. Upper module area to have storage pan. | $16,709 |
| 3130-0733 | The outboard panels of the pump module to be smooth plate seamless and painted job color. | $514 |
| 3130-0734 | Side Mount Pump Module with 17" wide integral preconnect area located forward of pump panel. Includes tool compartment each side below the forward preconnect area and running boards. | $9,582 |
| 3130-0737 | Enclosed Pump Module with Triple Speedlays. Includes 51" wide pump panel opening. Includes a lower preconnect area for (1) 2.5" speedlay and a upper preconnect area for (2) 1.5" speedlays lower storage compartments with push button latches forward of pump panel opening. Upper module area to have storage pan. | $16,709 |
| 3130-0738 | Pump module compartment approx. 20 inches deep located on the officer side. Includes provision for discharges or intakes on the back wall as applicable. Requires enclosed pump module special ordered water pump and engineering approval. | $689 |
| 3130-0739 | The pump module side panels shall be inset at standard width on both sides of the apparatus with running boards only below module panels. Forward hose storage areas and/or upper module shall be extended outward to full body width to allow for longer storage capacity and for upper module to have a full body width dunnage pan as applicable per configuration. Side forward body steps not usable with this option and slide out platforms may be needed to accommodate reach to options in dunnage pan as applicable. i.e. booster or cord reels or similar which will deploy off of module side. | $4,196 |
| 3130-0741 | Upper stainless steel pump module with double stacked double crosslays and top open storage with treadplate flooring. Crosslay floors lowered to approximately 66" above ground. | $1,783 |
| 3130-0742 | Top mount pump module walkway runningboards and formed walkway access steps shall be made out of embossed diamond plate with no gator grip in place of standard. | $319 |
| 3130-0743 | Top mount pump module with 20" walk way. Extruded aluminum with running boards and full width formed side access steps. | $6,005 |
| 3130-0744 | LINE-X pump module exterior: Includes exterior surfaces of all extrusions only. Specific areas like the areas for hinges doors handrails and pump panels shall not hav LINE-X finish to meet tight tolerence for better fit. | $1,920 |
| 3134-0006 | The single gauge panel on the driver's side of the side mount module is to be hinged downward. Includes two (2) cable hold opens and latches. | $138 |
| 3134-0009 | The gauge panel(s) on the driver side of the Side Mount module to be hinged upward. Includes two (2) gas shock hold opens and latches. | $138 |
| 3134-0011 | Officer side pump panel to be vertical hinged on forward extrusion. Panel(s) to be secured in the closed position with push button latches. Upper panel to be held open with gas shock. | $507 |
| 3134-0013 | Driver and Officer side pump panels to be vertical hinged on forward extrusion. Panels to be (2) or (3) pieces depending on module height and secured in the closed position with push button latches. Upper panels to be held open with gas shock. | $1,008 |
| 3134-0015 | Stainless steel TM control panel driver and officer side pump panels. | $980 |
| 3134-0017 | The TM control panel driver and officer side pump panels are to be painted Zolatone black. | $827 |
| 3134-0018 | The TM control panel driver and officer side pump panels are to be painted Zolatone gray. | $827 |
| 3134-0019 | The driver and officer side pump panels are to be painted Zolatone black. | $643 |
| 3134-0020 | The driver and officer side pump panels are to be painted Zolatone gray. | $643 |
| 3134-0021 | Body mainframe and upper body/hosebed side assemblies for a 95" high body. | $1,339 |
| 3134-0026 | Pump panel support angles. Locate up to (3) horizontal mounted as required on interior side of the main vertically hinged pump panel(s). | $156 |
| 3134-0027 | TM control panel to be Zolatone gray and driver and officer side panels to be stainless steel. | $582 |
| 3134-0028 | Pump panel layout and approval drawing to match existing and/or previous unit. To match as close as possible (Engineering and/or vendor requirements may alter final panel layout). | $427 |
| 3134-0036 | The TM control panel to be painted zolatone black and the driver and officer side pump panels are to be stainless steel. | $1,074 |
| 3134-0037 | Driver side pump panel to be vertically hinged on forward extrusion. Panel to be (2) piece and lower panel to be secured in the closed position with push button latches. Upper panel to be stationary. Includes vertically hinged panel rearward of backboard storage to be secured in the closed position with push button latches. | $708 |
| 3134-0038 | Diagramatic Color coded overlay around control handles and discharges | $47 |

| Item No. | Description | |
|---|---|---|
| 3134-0042 | Pump panels. Driver side upper pump access panel to be horizontally hinged with diamond plate door. Includes (2) push-button latches and (2) hold opens. Officer side pump panel to be vertically hinged on forward extrusion. Panel to be (2) or (3) pieces depending on module height and secured in the closed position with push button latches. Upper panel to be held open with gas shock. | $1,008 |
| 3134-0043 | Rear Mount pump access door. Includes (2) push button latches and (2) hold open devices. Door to be [#LOC]. Door to open to 90 degrees and includes pull strap for access from ground. | $492 |
| 3134-0049 | The main rear pump panel to be vertically hinged along officer side. Includes push-button latches and cable mounted hold open. | $507 |
| 3134-0051 | Driver and Officer side upper pump access panels to be horizontally hinged with diamond plate doors. Includes (2) D-ring latches and (2) hold opens for each. | $598 |
| 3134-0052 | Driver side pump panel to be vertically hinged on forward extrusion. Panel to be (2) piece and lower panel to be secured in the closed position with push button latches. Upper panel to be stationary. | $708 |
| 3134-0053 | Officer side pump panel Escutchion Plate shall be attach with Thumb Latch. | $182 |
| 3134-0055 | Officer side upper pump access panel to be horizontal hinged with stainless steel door. Includes (2) push button latches and (2) hold open devices. | $215 |
| 3134-0056 | Driver side panel shall be attach with screw.Officer side pump panels to be vertically hinged on forward extrusion. Panels to be (2) or (3) pieces depending on module height and secured in the closed position with push button latches. Upper panels to be held open with gas shock. | $1,008 |
| 3134-0063 | The rear mount gauge panel to be hinged upward. Includes (2) mechanical/pneumatic (as applicable to panel size) hold opens and latches. | $161 |
| 3134-0064 | The gauge panel(s) on the driver side of the Side Mount module to be hinged upward. Panel(s) to include (2) mechanical/pneumatic (as applicable to panel size) hold opens and latches. | $138 |
| 3134-0065 | Driver and Officer side pump panels. Upper panel to be bolt-on diamond plate panel. Lower pump panel to be vertically hinged on forward extrusion. Panel to be secured in the closed position with push button latches. | $1,412 |
| 3134-0066 | Officer side upper pump access panel to be horizontally hinged with smooth plate door painted Zolatone black. Includes (2) push button latches and (2) hold open devices. | $643 |
| 3134-0067 | Driver side pump panel to be full width of pump module due to thru-bolted push/pull rod extrusion. | $141 |
| 3134-0068 | Driver side panel shall be attach with screw and Escutchion Plate shall be vertically hinge forward.Officer side pump panels to be vertically hinged on forward extrusion. Panels to be (2) or (3) pieces depending on module height and secured in the closed position with push button latches. Upper panels to be held open with gas shock. | $1,008 |
| 3134-0069 | The stainless steel single gauge panel on the driver side of the side mount pump module is to be hinged downward. Includes two (2) cable hold opens and latches. | $138 |
| 3134-0070 | The stainless steel double gauge panels on the driver side of the side mount pump module are to be hinged downward. Includes two (2) cable hold opens and latches per door. Required with 6" master gauges and/or overcrowded single lower gauge panels. | $277 |
| 3134-0072 | Driver and officer side mounted pump panels are to be brushed stainless steel. | $554 |
| 3134-0073 | Driver and officer side mount pump panels are to be stainless steel with black Zolatone finish. Includes black suction and discharge bezels. | $643 |
| 3134-0074 | The top mount control panel and the driver and officer side pump panels are to be brushed stainless steel. | $980 |
| 3134-0075 | The top mount control panel and the driver and officer side pump panels are to be stainless steel with a black Zolatone finsh. | $827 |
| 3134-0078 | Special Driver and Officer side pump panels to be vertically hinged on forward extrusion. Panels to be (2) or (3) pieces depending on module height and secured in the closed position with push button latches. Upper panels to be held open with gas shock. | $1,450 |
| 3134-0082 | Driver side pump panel Escutchion Plate shall be hinge forward. Include thumb Latches. | $274 |
| 3134-0083 | The main and lower pump panel to be inset in the rear body and to run full height just below the roll-up door drum. Panels to enclosed on the sides and bottom with bolt-in plates matching main panel material.. Panel materials to be [#LOC]. | $506 |
| 3134-0084 | Driver and Officer side upper pump access panels to be horizontally hinged with aluminum smooth plate doors painted job color. Includes (2) push-button latches and (2) hold opens for each. | $643 |
| 3134-0086 | The side pump intake / discharge panels to be painted Zolatone gray. eMAX only. | $318 |
| 3134-0087 | Pump operator control panel in driver side forward body compartment to be painted Zolatone gray. eMAX only. | $403 |
| 3134-0088 | The side pump intake / discharge panels to be painted Zolatone black. eMAX only. | $318 |
| 3134-0089 | Pump operator control panel in driver side forward body compartment to be painted Zolatone black. eMAX only. | $403 |
| 3134-0090 | Custom sized stainless steel gauge panel(s) on the driver side of the side mount pump panel are to be hinged downward. Includes two (2) cable hold opens and latches. | $1,906 |

| Item No. | Description | |
|---|---|---|
| 3134-0091 | Officer side upper pump access panel to be horizontally hinged with diamond plate door. Includes (2) push-button latches and (2) hold opens. Lower pump panel Escutchion plate to be vertically hinged forward. Panel to be secured in the closed position with push button latches. | $708 |
| 3134-0093 | Top mounted pump operator control panel to be painted Zolatone gray. eMAX only. | $332 |
| 3134-0094 | Top mounted pump operator control panel to be painted Zolatone black. eMAX only. | $332 |
| 3134-0095 | The upper gauge panel on the enclosed pump panel is to be hinged forward. Side mount eMAX only. | $138 |
| 3134-0103 | The pump operator's pump panel and rear main pump panels are to be painted Zolatone black. | $643 |
| 3134-0104 | Officer side upper pump access panel behind crosslays to be horizontally hinged with stainless steel door. Includes (2) push button latches and (2) hold open devices. | $215 |
| 3134-0106 | Officer side pump panel escutchion plate shall be around each discharge and pump intakes. | $180 |
| 3134-0107 | The TM control panel to be stainless steel. The driver and officer side pump panels are to be painted Zolatone black. | $827 |
| 3134-0108 | Booster reel rewind switch. Switch guarded half moon. Location on driver side upper pump display panel. | $30 |
| 3134-0112 | Side control pump enclosure structure and panels to be modified as necessary to provide the lowest practical crosslay floor height from the ground. | $1,343 |
| 3134-0113 | Officer side upper pump access panel to be horizontally hinged with aluminum smooth plate door painted Zolatone black both sides. Includes (2) push button latches and (2) hold open devices. | $256 |
| 3134-0114 | Driver and officer side mount pump panels are to be stainless steel with gray Zolatone finish. | $643 |
| 3134-0117 | The main rear pump panel to be vertically hinged along officer side. Includes push-button latches and gas spring(s) mounted in place to hold open. | $595 |
| 3134-0118 | Rear Mount pump access doors (2) lift-up doors (1) each side. Includes (1) center slam strip reinforced (2) push button latches each side and (2) hold open devices each side. Doors to be [#LOC]. Doors to open to 90 degrees and includes pull strap for access from ground. | $492 |
| 3134-0121 | The side pump intake / discharge panels to be painted Zolatone black. SS eMAX only. | $388 |
| 3134-0122 | Pump operator control panel in driver side forward body compartment to be painted Zolatone black. SS eMAX only. | $492 |
| 3134-0123 | Top mounted pump operator control panel to be painted Zolatone black. SS eMAX only. | $405 |
| 3134-0126 | The top mount control panel and the driver and officer side pump panels are to be stainless steel. The top panel shall be finished with black Zolatone. The side panels shall remain stainless steel finish. | $827 |
| 3134-0127 | Driver and officer side mount pump panels are to be stainless steel with black Zolatone finish. Includes brushed suction and discharge bezels (not coated). Includes T bar and trim. | $608 |
| 3134-0129 | Driver side mount pump panel to be stainless steel with black Zolatone finish. Includes black suction and discharge escutcheon plates. | $323 |
| 3134-0130 | Zoloatone escutcheon plate under each (4) foam control handles. Hole diameter shall be as tight as possible to handle shaft size. | $239 |
| 3134-0131 | Driver and Officer side upper pump access panels to be horizontally hinged with stainless steel doors. Includes (2) D-ring latches and (2) hold opens for each. | $690 |
| 3134-0133 | Driver and officer side upper pump access panels to be horizontal hinged with stainless steel doors. Includes (2) push-button latches and (2) hold opens for each. | $427 |
| 3134-0134 | Officer side upper pump access panel to be horizontally hinged door painted Zolatone to match lower panels. Includes (2) push button latches and (2) hold open devices. | $215 |
| 3134-0135 | Driver and officer side upper pump access panels to be horizontally hinged with smooth plate door painted Zolatone to match lower panels. Includes (2) push button latches and (2) hold opens for each. | $427 |
| 3134-0136 | The side upper module panels/ access smooth plate doors to be painted Zolatone black. eMAX only. | $318 |
| 3134-0137 | The upper gauge panel is to be hinged forward. Includes (2) push-button latches. | $134 |
| 3134-0139 | Hinge Pump Panel shall be reinforce with a stiffener mounted on each hinge panel. | $112 |
| 3134-0141 | Rear Mount pump access door. Includes (2) D-ring latches and (2) hold open devices. Door to be [#LOC]. Door to open to 90 degrees and includes pull strap for access from ground. D-ring latch to utilize a slot in extrusion or to latch behind extrusion to secure without angle latch catch. | $570 |
| 3134-0142 | Pump panel support angles. Locate up to (3) horizontal mounted as required on interior side of the main vertically hinged pump panel(s).(Bolt on support). | $156 |
| 3134-0147 | Driver and officer side mount pump panels are to be stainless steel with black Zolatone finish. | $609 |
| 3134-0150 | Pump operator control panel in driver side forward body compartment L1 to be stainless steel.480 | $494 |
| 3134-0151 | The pump operator's pump panel are to be painted Zolatone black. | $314 |
| 3134-0152 | The pump panels including gauge panels shall be coated with LINE-X. | $1,308 |
| 3134-0156 | The stainless steel single gauge panel on the driver side of the side mount pump module is to be fixed mounted with stainless steel fasteners. For use with left side intermediate pump step option. | $96 |

| Item No. | Description | |
|---|---|---|
| 3134-0157 | The upper gauge panel is to be hinged upward. Includes latching and hold-open device. | $181 |
| 3134-0158 | Exterior surfaces of the front rear and side of the pump module as well as the upper access doors and t-bar/trim will have a black LINE-X finish. | $2,435 |
| 3134-0159 | Driver and officer side mounted pump panels are to be stainless steel with a black LINE-X finish. | $1,181 |
| 3134-0162 | Driver and Officer side pump panel Escutchion Plate shall be attach with Thumb Latch. | $365 |
| 3136-0000 | Air horn switch at pump panel. Switch to be labeled ''Evacuation Alert''. Location: [#LOC]. | $143 |
| 3136-0001 | Backboard storage compartment in pump module. Locate rearward of crosslays on SM and forward of crosslays on TM. Includes vertical hinged diamond plate access door each side. | $1,049 |
| 3136-0002 | Microphone box. Locate at the [#LOC]. | $502 |
| 3136-0003 | Microphone box Cast Products. Locate at/in the [#LOC]. | $468 |
| 3136-0004 | The lower area of the pump compartment to have a four (4) sided heat pan with two (2) removable (side to side) bottoms. Bottoms to be secured in the closed position with mechanical fasteners. | $1,020 |
| 3136-0005 | The crosslay divider(s) to be notched both ends for Task Force Nozzle. | $124 |
| 3136-0006 | Two (2) pump compartment heaters are to be mounted in the pump area. Locate as low as possible. | $1,658 |
| 3136-0007 | Two (2) FRC Mansaver bars (1) each side. Installed at pump module crosswalk area. The bars are to include [#COL] vinyl covers. | $1,283 |
| 3136-0010 | Stainless steel roller assemblies for crosslays and/or speedlays. | $296 |
| 3136-0011 | P-Rubber in flex joint(s) between pump module and/or body modules. | $608 |
| 3136-0012 | Slat flooring. The crosslay and/or speedlays are to have removable slat flooring. | $375 |
| 3136-0013 | Additional Booster Reel Roller Assembly. Locate opposite side of booster reel. | $247 |
| 3136-0015 | (2) vertical mounted booster reel spool guide roller assemblies. Locate (1) each side on trailing edge of beavertails/body (as applicable). For use with rear compartment mounted booster reel or similar. | $488 |
| 3136-0016 | Speedlay module trays mounted to a bi-directional Slide Master tray. | $1,238 |
| 3136-0017 | Driver side pump enclosure. The driver side lower pump module to be full width and full depth of the module and include area in upper section for mounting of roll-up door. | $3,088 |
| 3136-0018 | Officer side pump enclosure. The officer side lower pump module to be full width and full depth of the module and include area in upper section for mounting of roll-up door. | $3,088 |
| 3136-0020 | Air horn switch at pump panel. Switch to be labeled EMERGENCY EVACUATION. Label to have red back ground with white letters. Location: [#LOC]. | $147 |
| 3136-0023 | Microphone Box Cast Products. Locate at/in the [#LOC]. | $497 |
| 3136-0024 | Crosslays to accomadate extra capacity. | $536 |
| 3136-0026 | The crosslay divider(s) to have a hand hold cutout on outboard edge each side of divider(s). | $259 |
| 3136-0029 | Air horn switch at pump panel. Switch to be labeled ''Air Horn''. Location: [#LOC]. | $143 |
| 3136-0030 | Diamond plate cover for Vogel Auto Lube System. Cover to have cut-outs for checking system fluid levels. Location: driver's side of dunnage pan. | $156 |
| 3136-0031 | Removable Speedlay Tray(s). The floor of the tray(s) to be slotted to prevent the accumulation of water and allow for ventilation of wet hose. | $611 |
| 3136-0033 | Crosslay divider(s) to be lowered approx 5'' to provide room for bail handled nozzle(s) below cover. | $124 |
| 3136-0034 | Microphone box 10W X 6H X 11D located on pump operator panel. | $571 |
| 3136-0037 | Top mount walkway compartments. Includes spring mounted hinged doors with push button latch. Each compartment includes (1) incandescent light and wired to door adjar indicator. | $912 |
| 3136-0042 | Stainless steel roller assemblies for crosslays and/or speedlays. Rollers on side extrusions only and scuff plates on bottom extrusions. | $771 |
| 3136-0044 | Pump panel compartments with push button latch. Locate (1) driver side pump panel and (1) officer side pump panel. Compartments to be located in lower forward corner of pump panels. Compartments to be approx. 14" wide x 14" high x 14" deep. | $1,872 |
| 3136-0045 | Microphone Box Cast Products. Locate at/in the [#LOC]. | $497 |
| 3136-0049 | Deckgun to be located offset to the driver side of the dunnage storage pan. | $674 |
| 3136-0050 | Extreme weather heat pan plates. Includes interior module area mounted plates for increasing the lower heat pan (forward and rearward) into the lower area of the module for increased heat retaining. | $436 |
| 3136-0051 | Air horn switch at pump panel. Switch to be labeled ''Code Red''. Location: [#LOC]. | $143 |
| 3136-0053 | Microphone box. Locate at the [#LOC]. Microphone box to be 9"W x 11"H x 6.5"D. | $626 |
| 3136-0054 | Deckgun to be located offset to the driver side of the dunnage storage pan. Deckgun piping to be recessed as low as possible for use with Akron Apollo Hi-Riser #3431 | $674 |
| 3136-0055 | The speedlay divider(s) to be held 12" short both ends for Nozzles. | $389 |
| 3136-0056 | The crosslay divider(s) to be held 12" short both ends. | $409 |
| 3136-0059 | Speedlay module tray(s) mounted to a directional SlideMaster tray. SlideMaster to have 100% extension to one side. | $1,423 |
| 3136-0061 | Heat pan removable bottoms to have screws and nuts in place of butterfly latches. | $277 |
| 3136-0062 | Crosslay divider(s) to be adjustable front to rear. | $963 |

| Item No. | Description | |
|---|---|---|
| 3136-0064 | Heat pan. The lower area of the pump compartment to have a four (4) sided heat pan with two (2) removable (side to side) bottoms. Bottoms to be secured in the closed position with butterfly latches. | $1,020 |
| 3136-0066 | Microphone box. Dimensions for microphone box are 12.5" wide x 8" high x 6" deep. Locate at the [#LOC]. | $550 |
| 3136-0067 | DEF Tank mounting provision in right side of pump compt. Includes tank supports heat shield and tank fill access either through pump access door or separate door as applicable. | $365 |
| 3136-0069 | Speedlay module tray(s) mounted to a directional Slide Master tray. Slide Master to have 100% extension to the officer side. | $1,423 |
| 3136-0070 | Stainless steel scuff plate assemblies for speedlays. Scuff plates to be on top bottom and sides of each opening. | $771 |
| 3136-0071 | Microphone Box Cast Products. Locate at/in the [#LOC]. | $468 |
| 3136-0073 | Removable Poly Speedlay Tray(s). The floor of the tray(s) to be slotted to prevent the accumulation of water and allow for ventilation of wet hose. Includes vertical slotted hand hold cutouts on each end to facilitate easy removal of the hose tray. | $560 |
| 3136-0074 | Stainless steel scuff plates for crosslays and/or speedlays. | $344 |
| 3136-0076 | Pump module mounted 3 sided light tower shield with approx 28 degree side slope to the driver side. The shield to be even with top of the body and painted job color. | $1,205 |
| 3136-0078 | Top mount walkway compartments. Includes spring mounted hinged doors with push button latch. Each compartment includes (1) LED light and wired to door adjar indicator. | $912 |
| 3136-0079 | Q2B switch at pump panel. Switch to be labeled "Evacuation Alert". Location: [#LOC]. | $143 |
| 3136-0080 | Compartment below the top mount walkway to be labeled "SHOVELS" on each door. | $57 |
| 3136-0081 | A pump compartment heater with 110V blower to be mounted in the pump area. | $1,292 |
| 3136-0083 | Removable Poly Speedlay Tray. The floor will be notched for the preconnect swivel to be positioned as required with the tray in the stowed position. The floor of the tray(s) to be slotted to prevent the accumulation of water and allow for ventilation of wet hose. | $560 |
| 3136-0085 | Cast Products EB0010-1-A microphone box. Locate on driver side pump panel. Hinge door to the right. | $540 |
| 3136-0086 | Notched crosslay divider(s) on both ends for preconnect line(s) nozzle end storage with NFPA cover(s) in closed position. Additional 45 degree angle notch on inside edge on each side. Crosslay divider(s) to be held 1" short below crosslay cover. | $304 |
| 3136-0087 | Aluminum splash guard over top of hydraulic pump for cab tilt. | $193 |
| 3136-0088 | Captive booster reel rollers mounted through panel/module. Locate to booster reel side and size for width of reel assembly. | $403 |
| 3136-0090 | Speedlay tray - removable. Tray includes a 1.25" extruded alum handle low on each end of tray and slots down each side to facilitate lifting. The floor of the tray shall have poly slides and be slotted to prevent the accumulation of water and allow for ventilation of wet hose. | $611 |
| 3136-0091 | Vertically hinged access door with push button latch for cord reel in driver side of dunnage pan. Includes cut-out in dunnage pan for access to cord reel rollers. Mount junction box to inside of access door. | $478 |
| 3136-0096 | Stainless steel roller assemblies for crosslays. Includes handrail the width of the crosslays in place of bottom roller. | $428 |
| 3136-0098 | Microphone box. Dimensions for microphone box are 12" wide x 12" high x 6" deep. Locate at the [#LOC]. | $570 |
| 3136-0099 | Captive booster reel rollers. (1) mounted through dunnage pan floor inboard of booster reel and (1) thru pump access door. Locate to booster reel side and size for width of reel assembly. | $403 |
| 3136-0100 | Notched Speedlay divider(s) on both ends for connecting preconnected hoses. Notch to be 12"L X 4"H enough room to use a spanner wincher for connecting hoses. | $96 |
| 3136-0102 | Booster Reel Riser for rollers. Locate with officer side dunnage pan rollers. | $91 |
| 3136-0103 | Booster Reel Riser for rollers. Locate with driver side dunnage pan rollers. | $90 |
| 3136-0107 | Microphone box. Locate at the [#LOC]. Microphone box to be 9"W x 11"H x 8"D. Locate Pump operator panel. | $626 |
| 3136-0108 | (2) vertically mounted booster reel spool guide roller assemblies. Locate (1) each side inside rear body compartment opening. For use with rear compartment mounted booster reel. | $488 |
| 3136-0109 | Removable Poly Box(s). Box to be located in lower transverse storage area (one each side) approx. 15" high x 14" wide x 34" deep. The floor of the box(es) to be slotted to prevent the accumulation of water and allow for ventilation of wet hose. | $560 |
| 3136-0111 | Microphone box. Dimensions for microphone box are 8" wide x 12" high x 6" deep. Locate at the [#LOC]. | $550 |
| 3136-0114 | The running board(s) to be notched for Pistion Intake Valve. Location(s): [#LOC]. | $473 |
| 3136-0115 | The lower area of the pump compartment to have a four (4) sided heat pan with two (2) removable (side to side) bottoms. Lower section of pan designed to provide the maximum amount of ground clearance. Bottoms to be secured in the closed position with butterfly latches. | $1,020 |
| 3136-0116 | DEF Tank mounting provision in left side pump compt to the rear of the pump. Includes tank supports and tank fill access door. | $322 |

| Item No. | Description | |
|---|---|---|
| 3136-0117 | P-Rubber in flex joint(s) between pump module and/or body modules. Horizontal across tops and along sides at flex joint(s). | $608 |
| 3136-0118 | A two (2) piece aluminum pan shall be bolted in place below the pump controls within the pump module. This pan shall utilize .090 aluminum plate to provide a shield to reduce heat loss as the pump controls exit the pump module for the top mount control panel. | $265 |
| 3136-0120 | Captive booster reel rollers mounted on booster reel assembly. Rollers sized for width of reel assembly. | $403 |
| 3136-0121 | Speedlay tray - Polypropylene - removable. Tray includes pull out grab handle (poly dowel) down low on each end to facilitate lifting. The trays shall be made from Polypropylene the floor of the tray shall be slotted to prevent the accumulation of water and allow for ventilation of wet hose. | $867 |
| 3136-0122 | Commercial chassis requires 3" additional to cab and body gap due to exhaust requirements. | $343 |
| 3136-0126 | Microphone box. Dimensions for microphone box are 7.5" wide x 15" high x 11" deep. Locate at the [#LOC]. | $550 |
| 3136-0127 | The pump module storage pan shall be upgraded to include a hinged cover. The hinged cover shall be constructed of 3/16" embossed aluminum tread plate include a grab handle (2) butterfly latches and hold open device(s). The cover shall be included in the door ajar circuit and may be used a walking surface. | $520 |
| 3136-0129 | Horizontally hinged access door with D-ring latch for access to officer side of dunnage pan. Includes cut-out in dunnage pan. | $478 |
| 3136-0130 | Speedlay tray - Polypropylene - removable. Tray includes pull out grab handle (poly dowel) down low on each end to facilitate lifting. The tray(s) shall be sized approximately 18" H X 10" W. The tray(s) shall be made from Polypropylene the floor of the tray shall be slotted to prevent the accumulation of water and allow for ventilation of wet hose. | $867 |
| 3136-0133 | Removable Poly Speedlay Tray(s). The floor of the tray(s) to be slotted to prevent the accumulation of water and allow for ventilation of wet hose. | $560 |
| 3136-0135 | Removable Poly Speedlay Tray(s). The floor of the tray(s) to be slotted to prevent the accumulation of water and allow for ventilation of wet hose. Trays will be equipped with a handle each side to assist in removing from speedlay storage area. | $560 |
| 3136-0136 | Removable speedlay tray(s). The floor of the tray(s) shall be sloped from a raised position in the middle slanted downward towards each end. Additionally the floors shall be slotted to prevent the accumulation of water and allow for ventilation of wet hose. There shall be slotted hand holds on each side of the tray (IPO grab handles on each end). | $746 |
| 3136-0137 | All drains within the pump module shall be bundled together to exit the heat pan as a bundle beneath the pump rather than separately. | $209 |
| 3136-0138 | Pump module storage pan. | $770 |
| 3136-0139 | Crosslay double 7.5" wide each to hold up to 200' of 2.0" DJ hose (each). | $755 |
| 3136-0140 | Crosslay double 7.5" wide each with extra depth to hold up to 400' of 2.0" DJ hose (each). | $929 |
| 3136-0141 | Crosslay double 4.25" wide single stack to hold up to 200' of 2.0" DJ (each). | $902 |
| 3136-0142 | Crosslay triple 4.25/4.25/5" wide single stack to hold up to 200' of 2.0" DJ (each) in front lays and 150' to 200' of 2.5" DJ hose in rear lay. | $1,337 |
| 3136-0144 | Crosslay single 5" wide single stack to hold up to 200' of 2.0" DJ or 150' to 200' of 2.5" DJ hose. | $500 |
| 3136-0145 | Insulation - front pump compartment access door. | $108 |
| 3136-0146 | Compartments for TM walkway (PR). Includes hinged door each side with push button latch and LED compartment light. Requires TM pump module with walkway. | $751 |
| 3136-0149 | A removable .187" aluminum treadplate cover panel shall be installed at the front of the speedlay module adjacent to the crosswalk assembly. Panel shall be secured with lift & turn latches for quick removal and for accessibly for hose loading. SS Product only. | $392 |
| 3136-0151 | Microphone box. Dimensions for microphone box are 12" wide x 12" high x 6" deep. Locate at the driver side pump panel. With hold open device. | $673 |
| 3136-0152 | Air horn switch at pump panel. Switch to be labeled ''Evacuation Alert'' with a 4" x 2.5" orange backing plate. | $194 |
| 3136-0153 | (2) vertically mounted booster reel spool guide roller assemblies. Locate (1) each side on trailing edge of body 3x3 down low. | $488 |
| 3136-0154 | Enclosed transverse compartment above pump gauge panel. Approximately 24" H x 15" W x 76" L. Includes vertically hinged SS doors each side and D-ring latch with gas tube hold opens and the top of the compartment will be embossed aluminum treadplate. | $1,773 |
| 3136-0157 | Stainless steel scuff plates for speedlays. Includes full height of exterior extrusion to lower tool compartment. | $318 |
| 3136-0158 | Upper and/or lower speedlay tray 8.5" interior width. - removable. Tray includes a 1.25" extruded alum handle low on each end of tray and slots down each side to facilitate lifting. The floor of the tray shall have poly slides and be slotted to prevent the accumulation of water and allow for ventilation of wet hose. | $611 |
| 3136-0162 | Hi Rise tray - removable. Tray includes a 1.25" extruded alum handle low on each end of tray and slots down each side to facilitate lifting. The floor of the tray shall have poly slides and be slotted to prevent the accumulation of water and allow for ventilation of wet hose. | $611 |

| Item No. | Description | |
|---|---|---|
| 3136-0164 | Stainless steel scuff plate assemblies for speedlays & crosslays. Scuff plates to be on top bottom and sides of each opening mechanically fastened with screws. | $1,182 |
| 3136-0165 | Microphone box. Dimensions for microphone box are 14" wide x 6" high x 6" deep. Locate at the pump operator panel. | $550 |
| 3136-0166 | Removable Speedlay Tray(s). The floor of the tray(s) to be slotted to prevent the accumulation of water and allow for ventilation of wet hose. The front and rear walls of tray(s) to be the same height. There shall be vertical slots on each side of the tray ( in place of extruded grab handle) to facilitate lifting. This tray shall only be used with taller speedlay opening so the preconnect swivel shall be at the top (as opposed to rear wall) and walls of the tray can be same height. | $611 |
| 3136-0178 | Microphone box. Dimensions for microphone box are 14" wide x 5" high x aprox 6" deep. Locate at the the right side of the top mount gauge panel. SS top mount product only | $575 |
| 3136-0179 | Recessed area in storage pan for deck gun to be as low as practical. Deck gun connection to terminate 3" below top of pump module. | $639 |
| 3136-0180 | Crosslay triple 4.25/4.25/4.25" wide single stack to hold up to 200' of 2.0" DJ in each hose lay. | $1,337 |
| 3136-0181 | Speedlay tray - removable - extra length for full width module. Tray to be 14W x 9H x Full width of module. Tray includes a 1.25" extruded alum handle on each end of tray and slots down each side to facilitate lifting. The floor of the tray shall have poly slides and be slotted to prevent the accumulation of water and allow for ventilation of wet hose. | $704 |
| 3136-0182 | Crosslay double 6.25" wide single stack to hold up to 200' of 2.0" DJ or 150' of 3.0 DJ (each). | $902 |
| 3136-0183 | Backboard/pike pole storage compartment located to rear of crosslays. Includes partition between backboard and pike poles and vertically hinged diamond plate access door each side. Note pike poles will only be accessible from driver side and longest pike pole that compartment will accommodate is 6'. | $1,207 |
| 3136-0184 | Crosslay double 5.5" wide single stack to hold up to 200' of 2.0" DJ (each) or 150' of 3.0 DJ (each). | $902 |
| 3136-0185 | Extra Capacity Removable Poly Speedlay Tray(s). Tray(s) to be approx 8.25" wide inside X 17.50" high inside. The floor of the tray(s) to be slotted to prevent the accumulation of water and allow for ventilation of wet hose. | $560 |
| 3136-0186 | Air horn switch at pump panel. Switch to be labeled ''Evacuation Alert'' with red cover. Location: [#LOC]. | $143 |
| 3136-0190 | Backboard storage compartment in pump module. Locate rearward of crosslays on SM and forward of crosslays on TM. Includes vertical hinged diamond plate access door each side. Backboard storage to be 10" wide. | $1,009 |
| 3136-0191 | LINE-X package for pump module storage pan(s): Includes all surfaces of the pan visible from top of the truck. Also includes all platework fabricated at E-ONE mounted inside the pan such as hydraulic system cover generator shield reservoir cover cooler cover cord reel cover boxes dividers trays etc as applicable. | $735 |
| 3136-0192 | Zolatone (same color as pump panels) package for top mount pump module platework: Includes pump module upper side panels panels and access door(s) in front of the module adjacent to the walkway back panel of speedlay module adjacenet to the walkway if applicable tool compartment doors on walkway and speedlay as applicable. | $428 |
| 3136-0193 | Crosslay quadruple single stack. Forward two (2) lays to hold up to 200' of 1.75" DJ (each). Rearward two (2) lays to be dry lays that hold up to 200' of 1.75" DJ or 150 of 3.0" DJ (each). | $1,757 |
| 3136-0194 | Crosslay triple 4.25/4.25/12" wide single stack to hold up to 200' of 2.0" DJ (each) in front lays and double stack to hold 200' of 3.0" DJ hose in rear lay. | $1,337 |
| 3136-0195 | Pump module upper side panels shall be smooth plate painted job color (dual tone as applicable). Smooth plate Zolatone (same color as pump panels) finish shall be applied to panels and access door(s) in front of the module adjacent to the walkway speedlay panels (back panel of seperate speedlay module adjacent to the walkway and front panel facing the cab) as applicable tool compartment doors on walkway and speedlay as applicable. | $428 |
| 3136-0196 | Backboard/pike pole storage compartment located to rear of crosslays. Two (2) pikes to be offset rear in the compartment and up high. One (1) pike pole accessible from driver side and one (1) to be accessible from the officer side. Longest pike pole that compartment will accommodate is 6'. | $1,207 |
| 3136-0197 | Backboard storage compartment in pump module. Locate rearward of crosslays on SM and forward of crosslays on TM. Includes vertical hinged diamond plate access door each side hinged rearward. Opening to be 7" wide. | $1,049 |
| 3136-0198 | Backboard and rescue bag storage area for customer furnished and installed items. Module for (2) 19.5''W x 2''H x 75''L backboards in the forward section. Rearward left side sections (1) Pedi board bag (1) splint board bag (1) collar bag and (1) KED bag. Module constructed of 1/8" smooth aluminum plate. | $667 |
| 3136-0200 | Crosslay triple 4.25/ 5"/ 4.25" wide single stack to hold up to 250' of 1.75" DJ (each) in front and rear lays and 200' 2.5" DJ hose in center lay. The crosslay depth shall be 28" deep. | $1,337 |
| 3136-0201 | Cross lay divider(s) to be adjustable front to rear in slotted holes added to cross lay floor. | $348 |
| 3136-0202 | Speedlay single - double stack to hold up to 200' of 2.0" DJ hose located in the rear pump compartment. | $500 |

| Item No. | Description | |
|---|---|---|
| 3136-0204 | Modify the upper rear officers side pump module and dunnage pan. Assemble and install a 4-bottle SCBA storage rack (consisting of an 8" aluminum tube assy; 2-tubes wide/2-tubes high) for SCBA bottle storage up to 7.5" diameter x up to 25" long (including valve). Includes a Lift-up style door (matching pump access door material) w/gas spring (wired to door ajar alert) bottle tube saftey straps and a removable aluminum diamond plate protective cover in officers side dunnage pan over the bottle rack. | $742 |
| 3136-0205 | Removable Aluminum Speedlay Tray(s) with slotted floor to prevent the accumulation of water and allow for ventilation of wet hose. Includes vertical slotted hand hold cutouts on each end to facilitate easy removal of the hose tray. No lip No grab rod. | $611 |
| 3136-0206 | Removable Poly Speedlay Tray(s). The floor of the tray(s) to be slotted to prevent the accumulation of water and allow for ventilation of wet hose. The front and rear walls of tray(s) to be the same height. There shall be vertical slots on each side of the tray ( in place of extruded grab handle) to facilitate lifting. Tray to have special notching for easy removal of tray(s) from module area. | $560 |
| 3136-0207 | Crosslay double 4.25"/5.0" wide single stack to hold up to 200' of 2.0" DJ and 150' of 2.5" DJ | $902 |
| 3136-0208 | Cross lay double Lay 1- 4.25in. wide single stack to hold up to 200ft. of 2.0in. DJ and Lay 2- 7.75in. wide double stack to hold 200ft of 2.0in DJ with lower stacks or more with excess capacity as configured. | $970 |
| 3136-0209 | Speedlay tray - removable. Tray includes a 1.25" extruded alum handle low on each end of tray and slots down each side to facilitate lifting. The floor of the tray shall have poly slides and be slotted to prevent the accumulation of water and allow for ventilation of wet hose. Tray to be 8" tall IPO standard. | $581 |
| 3136-0210 | Crosslay double 5.5" wide single stack to hold up to 200' of 2.0" DJ (each). | $902 |
| 3136-0211 | The pump module storage pan shall be upgraded to include a two piece cover for the Wabasto system. The cover shall be constructed of 3/16" embossed aluminum tread plate include a grip strut insert in the section over the heater to allow heat dissipation. It shall be bolted down using four 5/16" HEX-head bolts in each section for easy removal. The cover may be used a walking surface. | $520 |
| 3136-0212 | Crosslay single 10.25" wide single stack to hold up to 300' of 2.5" DJ hose. | $500 |
| 3136-0213 | LINE-X package for enclosed pump module: All sheet metal surfaces including compartment walls pump access doors storage compartment walls and doors running boards etc shall be coated with LINE-X. Does not include pump panel or gauge panel which are part of a seperate package. | $410 |
| 3136-0214 | Crosslay triple 7.75/7.75/10" wide double stack to hold up to 200' of 2.0" DJ (each) in front lays and 200' of 2.5" DJ hose in rear lay. | $1,337 |
| 3136-0217 | Crosslay triple 4.25/4.25/5in. wide single stack to hold up to 200ft. of 2.0in. DJ (each) in front lays and 150-200ft. of 2.5in. DJ hose in rear lay. Cross Lay lowered height to be 68in. from ground for ease of deployment. | $1,367 |
| 3136-0218 | Diamond plate protective cover shall be provided for the foam system hydraulic cooling fan assembly. Cover shall be partially made out of expandable metal or similar design for sufficient air flow. | $367 |
| 3136-0219 | Diamond plate protective cover shall be provided for the foam system hydraulic reservoir. Cover shall be designed with the reservoir fill cap protruding through it for easier refilling. | $239 |
| 3136-0220 | Crosslay triple 4.25/4.25/6" wide single stack to hold up to 200' of 2.0" DJ (each) in front lays and single stack to hold 150' of 3.0" DJ hose in rear lay. | $1,337 |
| 3136-0221 | Crosslay quadruple single stack. All four (4) lays to hold up to 200' of 1.75" DJ (each). | $1,757 |
| 3136-0222 | Durabak package for pump module storage pan(s): Includes all surfaces of the pan visible from top of the truck. Also includes all platework fabricated at E-ONE mounted inside the pan such as hydraulic system cover generator shield reservoir cover cooler cover cord reel cover boxes dividers trays etc as applicable. | $735 |
| 3136-0224 | Aluminum speedlay module with divider and Duradek flooring. Constructed using 1/4" thick aluminum with a DA sanded finish. | $947 |
| 3136-0225 | The upper side panels of the TM pump module to be smooth plate painted Zolatone to match the lower pump panels. | $257 |
| 3136-0226 | The upper side panels of the TM pump module to be stainless steel to match the lower pump panels. | $257 |
| 3136-0227 | Crosslay quad 7.50/7.50/7.50/7.50 wide double stack to hold up to 200ft. of 1.75in. DJ hose (each) per lay. | $1,860 |
| 3136-0228 | Upper storage compartment in pump module. Located in the upper rear corner of pump module. Includes driver side vertical hinged diamond plate access door. | $1,049 |
| 3136-0229 | Crosslay triple 5.50/5.50/5.50" wide single stack to hold up to 200' of 2.0" DJ in each hose lay. | $1,337 |
| 3136-0230 | Crosslay double 7.75"/ 7.75" wide double stack to hold up to 200' of 2.0" DJ (each) in front lays and dry lay 10" wide to hold 150' of 2.5" DJ hose in rear lay. | $1,337 |

| Item No. | Description | |
|---|---|---|
| 3136-0231 | Transverse storage compartment in pump module. Locate rearward of crosslays on SM and forward of crosslays on TM. Includes vertical hinged diamond plate access door each side. Width and Height of storage based on available space forward (or) aft of the crosslays. | $1,049 |
| 3136-0232 | Crosslay triple 4.75/4.75/5.50" wide single stack to hold up to 200' of 2.0" DJ (each) in front lays and 150' of 2.5" DJ hose in rear lay. | $1,337 |
| 3136-0233 | A recessed pocket area in the rearward portion of the officer side running board shall be provided. It is a square fabricated assembly designed to store (1) 2.5 gallon pressurized water can fire extinguisher. The extinguisher shall be recessed in the running board approximately half of it height. A nylon buckle strap shall be provided to secure item for transit. Extinguisher not included. | $266 |
| 3136-0234 | Crosslay triple 4.25/4.25/6" wide single stack to hold up to 200' of 2.0" DJ (each) in front lays and 200' of 3.0" DJ hose in rear lay. | $1,337 |
| 3136-0235 | Backboard and Pike Pole storage compartment in pump module. Locate rearward of crosslays on SM and forward of crosslays on TM. Includes vertical hinged diamond plate access door each side. Storage for one (1) backboards forward and three (3) pike poles on the rear wall stored vertically. The pike pole tubes to be inside each door opening 8" (60" long tubes). The door opening to be 6" wide. | $1,548 |
| 3136-0236 | Cross lay double 7.5" wide double stack to hold up to 200ft. of 2.0in. DJ (each) Cross Lay lowered height to be 66in. from ground for ease of deployment. Front module headboard height to be reduced aprox. 12in. on an 80" high module or as applicable to hose load and module height if otherwise optioned. | $1,367 |
| 3136-0237 | A 19" wide preconnect area shall be provided on the pump module to accomodate three (3) speedlay hosebeds. The lower area shall each have two (2) speedlays each with a capacity to hold 200` of 1.75" DJ fire hose double stacked. The upper area shall have one (1) speedlay with a capacity to hold 200` of 2.5" DJ fire hose triple stacked. | $1,337 |
| 3136-0238 | Storage pan access lid(s) made from embossed diamond plate. The lid(s) shall be hinged outboard with two grab handles per lid and gas shock hold opens. | $708 |
| 3136-0239 | Storage pan side access door(s) made from aluminum smooth plate (same finish as pump module). The door(s) shall be lift up style with push button latch(es) and gas shock hold opens. | $464 |
| 3136-0240 | The pump module shall include (3) 1.5" speedlays and (1) 2.5" crosslay rearward of the stacked preconnect area. | $1,507 |
| 3136-0241 | Crosslay(s) to be lowered per customer specific requirement. | $261 |
| 3136-0243 | Crosslay single 10" wide single stack to hold up to 300' of 1.75" DJ or 250' of 2.5" DJ hose. | $852 |
| 3136-0244 | The walls of top mount walk way tool storage compartments to have (2) additional louver patterns in rear wall of each compartment for a total of (3) each side IPO standard for additional ventilation. | $187 |
| 3136-0245 | Crosslay triple 5.50/5.50/5.50" wide single stack to hold up to 200' of 2.0" DJ (each) in front lays and 150' to 200' of 2.5" DJ hose in rear lay. | $1,337 |
| 3136-0246 | Maximum size brushed stainless steel fully removable bolt-on access panel shall be installed on the driver side of the pump enclosure lower pump connection panel. | $478 |
| 3136-0247 | The module design shall include a storage area rearward of the cross lays for (2) New York Hooks each 72" long. The storage area shall have an opening of approximately 20in. high x 5in. wide. The hooks shall be secured with 1/8in. (.125) aluminum treadplate vertical hinged doors on each end of the compartment with push button latches. There shall be a horizontal divider 8in. off storage compartment floor and the door shall be tied to door ajar. | $1,077 |
| 3136-0248 | Crosslay triple 6.5/6.5/8" wide single stack to hold up to 200' of 2.0" DJ (each) in front lays and single stack to hold up to 200' of 3.0" DJ hose in rear lay. | $1,337 |
| 3136-0249 | Booster Reel Riser for rollers. Locate with officer side dunnage pan rollers. Riser to have increased height to clear the top of the body. | $177 |
| 3136-0250 | The upper pump module shall be extended to the full width(side to side) of the lower pump module. | $968 |
| 3136-0251 | Crosslay double 7.5" wide forward and 10.5" wide rearward each with extra depth. Forward lay to hold up to 400' of 2.0" DJ hose and rearward lay to hold up to 400' of 2.5" DJ hose. | $1,025 |
| 3136-0252 | Crosslay triple 5.50 / 5.50 / 5.50" wide single stack to hold up to 200' of 2.0" DJ (each) in front lays and 200' of 2.5" DJ hose in rear lay. | $1,337 |
| 3136-0254 | Divider in back board compartment located 3" from the front wall. Rearward of the divider a full height stop located 50" from the door opening on the officer side for a 1" x 17" high x 45" long airbag. | $230 |
| 3136-0255 | Speedlay tray - Polypropylene - removable. Tray includes pull out relief grab handles each end in side walls or as applicable in place of dowels to facilitate lifting. The trays shall be made from Polypropylene the floor of the tray shall be slotted to prevent the accumulation of water and allow for ventilation of wet hose. | $867 |
| 3136-0256 | The pump module shall include (2) 1.5" speedlays and (1) 2.5" speedlay preconnect area. | $1,315 |
| 3136-0257 | The pump module shall include (3) 1.5" speedlays. | $1,315 |

| Item No. | Description | |
|---|---|---|
| 3136-0259 | Pump module upper side panels shall be Flush smooth plate painted job color (dual tone as applicable). | $883 |
| 3136-0260 | Air horn switch at officer side pump panel. Switch to be labeled ''Evacuation Alert'' with a 4" x 2.5" orange backing plate. | $194 |
| 3136-0262 | The pump module shall include (2) 1.5" speedlays and (1) 2.5" crosslay. | $1,315 |
| 3136-0263 | The pump module shall include (2) 1.5" speedlays. | $1,315 |
| 3136-0264 | Crosslay quadruple 5.5/5.5/5.5/6 wide single stack to hold up to 200' of 1.75" DJ in the front two lays and up to 150' of 2.5" in the rear two lays. Rear crosslay is a dry lay. | $1,757 |
| 3136-0265 | Speedlay double - double stack to hold up to 200' of 1.75" DJ hose each located in the forward area of the pump module. Above the speedlay will be an open storage area for customer supplied storage. | $1,375 |
| 3136-0266 | Speedlay(s) to be lowered per customer specific requirement. | $261 |
| 3136-0267 | The pump module shall include (1) 1.5" speed lay and (1) 2.5" speed lay. | $1,315 |
| 3136-0268 | Booster Reel Riser for rollers. Locate with officer side reel rollers. | $91 |
| 3136-0274 | Top mount walkway shall be enclosed with hinged doors on each side of walkway entrance. | $1,644 |
| 3136-0275 | Crosslay quadruple single stack. 4.25/4.25/4.25/5" wide single stack to hold up to 200' of 2.0" DJ (each) in front lays and 150' of 2.5" DJ hose in rear lay. | $1,757 |
| 3136-0277 | Backboard storage; (1) industry standard backboard stored on edge inside an enclosed compartment rearward of crosslays accessible from the officer side. Compartment full height and width (side to side) of the dunnage area constructed of aluminum treadplate. Brushed stainless door with push button latch. | $980 |
| 3136-0278 | Crosslay double 10/15" wide with extra depth. Front lay to be double stack and to hold up to 100' of 2.5" DJ along with 200' of 1.75" DJ and rear lay to be triple stack and to hold 200' of 2.5" DJ hose. Crosslay lowered height to be 66" from ground for ease of deployment. | $1,367 |
| 3136-0280 | Pump module storage pan to be smooth plate. | $770 |
| 3136-0282 | Compartments for TM walkway (PR). Includes embossed diamond plate lift-up walkway lids each side for access with butterfly style latch(es) for securing in the closed position and LED compartment light. Requires TM pump module with walkway. | $751 |
| 3136-0283 | Pump module exterior platework to have swirl finish. Includes tool compartment access doors front access panel and upper panels on top mounts. Does not include walkway or walkway steps. | $1,525 |
| 3136-0284 | The pump module shall include (2) 1.5" speedlays and (1) 1.5" crosslay. | $1,315 |
| 3136-0286 | Pump module upper side panels shall be smooth plate painted job color (dual tone as applicable). | $428 |
| 3136-0288 | Crosslay triple 4.25/4.25/5" wide single stack to hold up to 200' of 2.0" DJ in front (2) lays and 200' of 2.5" DJ hose in single rear lay. | $1,337 |
| 3136-0289 | Transverse compt with vertical centered divider forward over pump panel. Includes vertical hinged to the front dia plt door tied to door ajar on each end with gas shock D-Ring latch and compartment light. | $1,037 |
| 3300-0007 | Door single vertical hinged painted. Location(s): [#LOC] | $754 |
| 3300-0008 | Door double vertical hinged painted. Location(s): [#LOC]. | $838 |
| 3300-0009 | Door single vertical hinged diamond plate. Location(s): [#LOC] | $527 |
| 3300-0010 | Door double vertical hinged diamond plate. Location(s): [#LOC]. | $754 |
| 3300-0011 | Door single horizontal hinged lift-up box pan configuration painted. Location(s): [#LOC] | $732 |
| 3300-0012 | Door single horizontal hinged lift-up box pan configuration diamond plate. Location(s): [#LOC] | $568 |
| 3300-0013 | Door roll up short (up to 45") with satin finish POK. Location(s): [#LOC] | $759 |
| 3300-0014 | Door roll up tall (greater than 45") with satin finish POK. Location(s): [#LOC] | $1,086 |
| 3300-0015 | Door roll up short (up to 45") with painted finish POK. Location(s): [#LOC] | $1,214 |
| 3300-0016 | Door roll up tall (greater than 45") with painted finish POK. Location(s): [#LOC] | $1,538 |
| 3300-0017 | Door roll up short (up to 45") with satin finish ROM. Location(s): [#LOC]. | $845 |
| 3300-0019 | Door roll up tall (greater than 45") with satin finish ROM. Location(s): [#LOC]. | $1,205 |
| 3300-0021 | Door roll up short (up to 45") with painted finish ROM. Location(s): [#LOC]. | $1,431 |
| 3300-0022 | Door roll up tall (greater than 45") with painted finish ROM. Location(s): [#LOC]. | $1,791 |
| 3300-0023 | Door single stainless steel vertical hinged painted. Location(s): [#LOC] | $943 |
| 3300-0024 | Door double stainless steel vertical hinged painted. Location(s): [#LOC] | $963 |
| 3300-0025 | Door single horizontal hinged drop down painted. Location(s): [#LOC]. Door(s) will have chain hold open devices. | $605 |
| 3300-0027 | Door bi-fold horizontal hinged diamond plate. Location(s): [#LOC]. Includes upper door mounted guide roller assembly and the lower door will have chains for side or upper rear body mount or bumper style for lower rear body mounted. | $838 |
| 3300-0028 | Door tri-fold vertical hinged diamond plate. Location(s): [#LOC] | $1,140 |
| 3300-0029 | Door single stainless steel horizontal hinged lift-up painted. Location(s): [#LOC] | $966 |
| 3300-0030 | Door double 3-point vertical hinged painted. Location(s): [#LOC] | $1,670 |
| 3300-0062 | Keyed compartment door latch with #1250 key. Location(s): [#LOC]. | $81 |
| 3300-0063 | Keyed roll-up compartment door with #1250 key. Location(s): [#LOC]. | $142 |

| Item No. | Description | |
|---|---|---|
| 3300-0064 | All apparatus doors body and chassis are to be keyed alike. Not avail on Commercial Chassis. Requires keyed latch option to be included in shop order. | $312 |
| 3300-0065 | Electric lock for an ROM roll-up door (EA). The door to lock on both sides of compartment as applicable. Includes manual J236 key lock. Location(s): [#LOC] | $620 |
| 3300-0066 | Drip pan for a ROM roll-up door (EA). Location(s): [#LOC]. | $171 |
| 3300-0076 | Door double 3-point vertical hinged painted. Location(s): [#LOC] | $1,217 |
| 3300-0078 | Cleveland door springs provided for all vertical hinged body doors. | $155 |
| 3300-0080 | Stainless steel interior body door overlay. Each hinged body door interior surface to have a stainless steel overlay. Overlay to fit around any surface mounted items on the door. | $3,136 |
| 3300-0081 | Keyed compartment door latch (Best Lock). Location(s): [#LOC] | $204 |
| 3300-0092 | Door double 3-point vertical hinged diamond plate. Location(s): [#LOC]. | $1,611 |
| 3300-0096 | Keyed roll-up compartment door with #J236 key. Location(s): [#LOC] | $142 |
| 3300-0097 | Keyed compartment door latch with #J236 key. Location(s): [#LOC] | $81 |
| 3300-0098 | Roll-up door package Amdor. Includes (2) short satin roll-up doors and (4) tall satin roll-up doors. Door pennant plates to be mounted offset forward of the compartment for better contact of external door slats to header plate brush. | $8,173 |
| 3300-0099 | Intergrated sill plate. Water Dam type door sill for ROM rollup door. Location(s):[#LOC] | $146 |
| 3300-0100 | Cleveland door springs provided for vertical hinged body door(s). Locate [#LOC]. | $155 |
| 3300-0102 | Polished stainless steel interior body door overlay. Each hinged body door interior surface to have a polished stainless steel overlay. Overlay to fit around any surface mounted items on the door. | $4,704 |
| 3300-0103 | Door double vertical hinged smooth plate sanded. Location(s): [#LOC]. | $838 |
| 3300-0104 | Keyed compartment Tri-Mark model 030-1300 door locking latch with (2) TM-700 keys. Location: [#LOC]. | $161 |
| 3300-0105 | Door roll up tall (greater than 45") with satin finish Amdor. Location(s): [#LOC]. | $1,573 |
| 3300-0106 | Door roll up short (up to 45") with satin finish Amdor. Location(s): [#LOC]. | $1,127 |
| 3300-0107 | Pull down straps for lift-up door. Loc: [#LOC]. | $106 |
| 3300-0119 | Door single vertical hinged smooth plate sanded. Location(s): [#LOC]. | $754 |
| 3300-0120 | Electric lock for a ROM roll-up door (EA). The door to lock on both sides of compartment as applicable. Includes manual 1250 key lock. Location(s): [#LOC] | $620 |
| 3300-0129 | Door bi-fold horizontal hinged smooth plate sanded. Location(s): [#LOC]. | $911 |
| 3300-0130 | Door single horizontal hinged drop-down painted. Includes body mounted stops to support the door in the open position. Location(s): [#LOC]. | $605 |
| 3300-0131 | Door bi-fold horizontal hinged painted. Location(s): [#LOC]. Includes upper door mounted guide roller assembly and the lower door will have chains for side or upper rear body mount or bumper style for lower rear body mounted. | $1,039 |
| 3300-0132 | Door to be notched for LDH hose. Notch on driver side to be approximately 5.75"W x 3.75"H and notch on officer side door to be approximately 10"W x 3.75"H. Location: B1 door. | $301 |
| 3300-0133 | Door single horizontal hinged drop-down sanded smooth plate. Location(s): [#LOC]. | $480 |
| 3300-0134 | Door single horizontal hinged lift-up box pan configuration painted. Includes double D-rings due to width of the door. Location(s): [#LOC] | $732 |
| 3300-0135 | Door double 3-point vertical hinged smooth plate sanded. Location(s): [#LOC]. | $1,670 |
| 3300-0137 | Stainless steel interior door overlay for R2. Overlay to fit around any surface mounted items on the door. | $699 |
| 3300-0138 | Keyed compartment door latch with #CH751 key. Location(s): [#LOC] | $81 |
| 3300-0139 | Door double 3-point horizontal hinged painted. Location(s): [#LOC]. Lower door should act as an exterior writing surface w/ adjustable angles. The paddle latch on the second door shall not protrude past the edge of the door. | $1,670 |
| 3300-0140 | Door single horizontal hinged drop down diamond plate. Location(s): [#LOC]. | $455 |
| 3300-0141 | Tri-Mark door latch. Location(s): [#LOC]. | $82 |
| 3300-0142 | Stainless steel door single vertical hinged painted. Location(s): [#LOC]. | $754 |
| 3300-0143 | Stainless steel short doors double vertical hinged painted. Location(s): [#LOC]. | $838 |
| 3300-0144 | Stainless steel door horizontal hinged lift-up painted. Location(s): [#LOC]. | $732 |
| 3300-0145 | Stainless steel door single horizontal hinged drop-down painted. Location(s): [#LOC]. | $605 |
| 3300-0146 | Stainless steel tall doors double 3-point vertical hinged painted. Location(s): [#LOC]. | $1,670 |
| 3300-0147 | Stainless steel short doors double 3-point vertical hinged painted. Location(s): [#LOC]. | $1,217 |
| 3300-0148 | Stainless steel door single vertical hinged brushed unpainted. Location(s): [#LOC]. | $754 |
| 3300-0151 | Drip pan with drain for a ROM roll-up door (EA). Location(s): [#LOC]. | $219 |
| 3300-0164 | Door double vertical hinged w/rotary latches - painted . Location(s): [#LOC] | $838 |
| 3300-0165 | Door double vertical hinged w/rotary latches - smooth plate sanded. Location(s): [#LOC]. | $838 |
| 3300-0166 | Door double vertical hinged w/rotary latches - diamond plate. Location(s): [#LOC] | $754 |
| 3300-0167 | Door double 3-point vertical hinged w/rotary latches - painted. Location(s): [#LOC] | $1,670 |
| 3300-0168 | Door double 3-point vertical hinged w/rotary latches - painted. For use with compartments up to 50" high. Location(s): [#LOC]. | $1,217 |
| 3300-0169 | Door double 3-point vertical hinged w/rotary latches - smooth plate sanded. Location(s): [#LOC] | $1,670 |

| Item No. | Description | |
|---|---|---|
| 3300-0174 | Keyed roll-up compartment door with #CH751 key. Location(s): [#LOC]. | $142 |
| 3300-0175 | Door roll up short (up to 45") with satin finish Gortite. Location(s): L2 and R2. | $1,083 |
| 3300-0176 | Door roll up tall (greater to 45") with satin finish Gortite. Location(s): L1/R1/L3/R3 and B1. | $1,267 |
| 3300-0177 | Door single horizontal hinged drop down painted. Door will have 2 D-ring handles. Location(s): [#LOC]. | $780 |
| 3300-0188 | Drip pan (E-ONE style) for a roll-up door (EA). Location(s): [#LOC]. | $193 |
| 3300-0191 | First closed door of double door compartment to have top and bottom latches (Each). | $237 |
| 3300-0192 | Polished stainless steel overlay on all double pan door's inner pan on body. 95 mid-mount aerial only. Overlay will be full height and should go around latch gas shock castings and lock cover. | $2,019 |
| 3300-0195 | Door roll up tall (greater than 45") with painted finish Amdor. Location(s):[#LOC]. | $2,134 |
| 3300-0196 | Door double vertical hinged painted includes (2) gas shock-style hold-open device IPOS. Location(s): [#LOC]. | $903 |
| 3300-0197 | Door roll up short (up to 45") with painted finish Amdor. Location(s): [#LOC]. | $1,895 |
| 3300-0202 | Door single horizontal hinged drop-down sanded smooth plate. Location(s): [#LOC]. | $480 |
| 3300-0203 | Door to be notched for 4" LDH hose. Notch to be 8.5" W x 3.75" H. Location: top of B1 driver side door. This door is to be the "first opened" door as shown on drawing. | $301 |
| 3300-0204 | Door to be notched for 5" LDH hose. Notch to be approximately 8"W x 2.5 "H. Location: top of B1 officer side door. | $301 |
| 3300-0205 | 3-Point latch double doors to have latch brackets installed with "PULL" tags. | $591 |
| 3300-0206 | Additional roll up door stop latches shall be mounted for B1 at a raised location aligned with the bottom of the ladder tunnel. The raised latches/hooks shall not be included as part the door ajar circuit. | $74 |
| 3300-0207 | Door bi-fold horizontal hinged smooth plate sanded. Location(s): [#LOC]. Includes upper door mounted guide roller assembly and the lower door will have chains for side or upper rear body mount or bumper style for lower rear body mounted. | $1,020 |
| 3300-0210 | Door to be notched for 4" LDH hose. Notch to be 8.5" W x 3.75" H. Location: top of B1 officer side door. This door is to be the "first closed" door as shown on drawing. | $301 |
| 3300-0211 | Door to be notched for 3" DJ hose. Notch to be 5" W x 1" H. Location: top of B2 officer side door. This door is to be the "first opened" door as shown on drawing. | $301 |
| 3300-0212 | Keyed compartment Tri-Mark model 030-1300 door locking latch with (2) 1250 keys. Location: [#LOC]. | $161 |
| 3300-0215 | Additional roll up door stop latches (PR) shall be mounted at a raised location aligned with the reduced depth transition area. The raised latches/hooks shall not be included as part the door ajar circuit. Location(s): [#LOC]. | $74 |
| 3300-0219 | Install dealer supplied roll up doors. The roll up doors for location(s): [#LOC]. shall be dealer supplied. These door kit(s) as supplied will be complete and correct for compartment(s) specified. E-ONE manufacturing shall install these dealer supplied ROM roll up door(s). | $236 |
| 3300-0220 | Reverse hinge single compartment door. Includes vertical mounted drip rail along forward area of compartment opening (in addition to the horizontal drip rail above the door opening). Location(s): [#LOC]. | $156 |
| 3300-0222 | Double door to have latch handle extension installed on secondary door's interior latch with "PULL" tags. Location(s): [#LOC] | $60 |
| 3300-0224 | Pull down straps for ROM roll-up door ipo rope. Location(s): [#LOC]. | $36 |
| 3300-0226 | Drip pan diamond plate with end plates(E-ONE style) for a roll-up door with drain hose. Location(s): [#LOC]. | $342 |
| 3300-0228 | Door double 3-point vertical hinged w/rotary latches - painted. Location: [#LOC]. D-ring primary door located rearward ipo standard. Door double 3-point vertical hinged w/rotary latches - painted. | $1,670 |
| 3300-0231 | Door roll up tall (greater to 45") with satin finish Gortite. Location(s):[#LOC]. | $1,267 |
| 3300-0239 | Door single vertical hinged painted with the hinge reversed so the door opens opposite of standard. Location(s): [#LOC] | $754 |
| 3300-0247 | Door horizontaly hinged without pan drop down smooth plate sanded. Single point D-Ring latch. Includes (2) hose notches on opening end. Left side notch for 5" LDH and right side for 3" DJ. Location: B2 | $533 |
| 3300-0248 | There shall be single piece compartment door drip rail provided over L1/L2 L5/L6 R1/R2 & R4/R5. Only available with (2) consecutive compartments with like doors. | $203 |
| 3300-0253 | Drip pan with end plates(E-ONE style) for a roll-up door with drain hose. Location(s): [#LOC]. | $342 |
| 3300-0255 | Door double expanded metal (material aluminum) and verticaly hinged. Includes bolt latch and door hold open device. Door to be located inside of body compartment and as close as possible behind exterior body compartment access door. Minimum depth behind expanded doors to be 24 inches. Finish: Sanded aluminum. Locate: R4: forward of partition. | $940 |
| 3300-0257 | Door roll up short (up to 45") with stainless steel door bar and painted finish ROM. Location(s): [#LOC]. | $1,468 |

| Item No. | Description | |
|---|---|---|
| 3300-0258 | Door roll up tall (greater than 45") with stainless steel door bar and painted finish ROM. Location(s): [#LOC]. | $1,828 |
| 3300-0259 | Door roll up tall (greater than 45 in.) with painted finish Hansen. Location(s): [#LOC] | $1,900 |
| 3300-0260 | Door roll up short (up to 45 in.) with painted finish Hansen. Location(s): [#LOC] | $1,707 |
| 3300-0261 | Door roll up tall (greater than 45 in.) with satin finish Hansen. Location(s): [#LOC]. | $1,456 |
| 3300-0262 | Door double vertical hinged painted. Location: B1 Primary door with the D-ring latch shall be positioned to the driver side so the first compartment door can be opened on the primary side which the rear discharge poisitioned to the officer side on rear also in use on scene. | $838 |
| 3300-0263 | Door roll up short (up to 45 in.) with satin finish Hansen. Location(s): [#LOC]. | $917 |
| 3300-0264 | Door double 3-point vertical hinged w/dual rotary latches. Note exterior D-Ring latches on primary and secondary doors.- painted. Location(s): [#LOC]. | $2,185 |
| 3300-0265 | Stainless steel tall doors double 3-point vertical hinged unpainted. Location(s): [#LOC]. | $1,226 |
| 3300-0269 | All side body double exterior doors shall have a 4.5" high stainless steel hasp installed to secure doors in case of door latching mechanism failure. This shall include an area to hang a carabineer with a safety cable (included). | $533 |
| 3300-0270 | Stainless steel lift bar upgrade ROM roll-up door (EA). | $50 |
| 3300-0271 | Door roll up short (up to 45") with painted finish ROM. Location(s): B1. SPECIAL PAINT INSTRUCTION: This door will be painted job color RED. | $1,431 |
| 3300-0272 | Door to be notched for 3" DJ hose. Notch to be 8.5" W x 3.75" H. Location: top of B1 officer side door. | $301 |
| 3300-0273 | Tri-Mark door latch IPO standard quarter turn latch. Location(s): [#LOC]. | $82 |
| 3300-0274 | Additional roll up door stop latches (PR) shall be mounted at a raised location aligned just above the dump. The raised latches/hooks shall not be included as part the door ajar circuit. Location(s): just above the dump for the door to be at the top of the dump. | $74 |
| 3305-0000 | Diamond plate generator cover. | $1,016 |
| 3305-0002 | Bi-Fold diamond plate cover for the crosslay area. Includes applicable grab handles and (2) hold downs. | $890 |
| 3305-0003 | Single diamond plate cover for the crosslay area. Includes applicable grab handle(s) and (2) hold downs. | $603 |
| 3305-0006 | All hand rails (as applicable) are to have a rubber insert. Includes cab (N/A on commercial chassis) pump module and body. | $1,798 |
| 3305-0007 | Vinyl [#COL] hose bed cover with attached rear flap(s). | $868 |
| 3305-0008 | Vinyl [#COL] crosslay cover with attached side flaps. | $305 |
| 3305-0009 | Compartment underbody with slide-out tray.(**Obsolete** See Sales code 3380-0078) Includes drop down front door with push button latch(es). [#LOC] | $1,932 |
| 3305-0010 | Compartment underbody. Includes drop down front door with push-button latches. Locate [#LOC]. | $1,256 |
| 3305-0011 | (2) piece aluminum hose bed cover with smooth bottom plate. Includes center hose bed divider with notched rear (as applicable) fill tower(s) access door(s) with handles (as applicable) gas shocks positive hold opens/hold closed at rear (2) grab handles front and (2) hand rails rear. | $3,348 |
| 3305-0012 | (4) piece aluminum hosebed cover. Includes center hosebed divider with notched rear fill tower(s) access door(s) with handles (as applicable) (2) gas shocks positive hold-opens/hold-closed at center and at the rear (6) grab handles- (4) fwd cover and (2) fwd area of rear cover with (2) handrails on rear cover. | $5,978 |
| 3305-0013 | (2) piece aluminum hosebed cover. Includes dividerless cross structure fill tower(s) access door(s) and handles (as applicable) (2) gas shocks positive hold-opens/hold-closed at the rear (2) grab handles (fwd) and (2) handrails (rear). | $3,460 |
| 3305-0014 | (4) piece aluminum hosebed cover. Includes divider-less cross structure fill tower(s) access door(s) and handles (as applicable) (2) gas shocks positive hold-opens/hold-closed at center and at the rear (6) grab handles- (4) fwd cover and (2) fwd area of rear cover with (2) handrails rear of each cover. | $6,282 |
| 3305-0015 | Vinyl [#COL] speedlay front cover. | $240 |
| 3305-0016 | Vinyl [#COL] speedlay side covers. | $204 |
| 3305-0017 | Nylon black strap on running board suction tray (EA). Location: [#LOC]. | $81 |
| 3305-0021 | Vinyl [#COL] hose bed cover with side bungee cords and attached rear flap(s). | $1,207 |
| 3305-0022 | Vinyl rear cover for diamond plate hose bed cover. Color: [#COL]. | $270 |
| 3305-0023 | Nylon black cargo net at rear of diamond plate or vinyl hose bed cover or similar. | $565 |
| 3305-0024 | Vinyl [#COL] side covers for diamond plate crosslay cover. | $191 |
| 3305-0025 | Nylon black cargo net on sides for crosslay cover. | $226 |
| 3305-0026 | Nylon black cargo net on front of speedlay. | $357 |
| 3305-0027 | Nylon black cargo net on sides of speedlay. | $262 |
| 3305-0028 | Vinyl [#COL] cover for running board suction tray. Location: [#LOC]. | $191 |
| 3305-0029 | Nylon black strap on running board suction tray (EA). For use with rolled hose. Location: [#LOC] | $92 |
| 3305-0031 | (4) piece aluminum low profile dividerless hosebed cover.The hosebed cover to include gas shocks low pro-file positive hold opens at rear (2) grab handles- frt and (2) handrails -rear. | $4,656 |

| Item No. | Description | |
|---|---|---|
| 3305-0032 | Cover for side ladder tunnel. To include mounting bracket over upper ladders in pump module and black vinyl cover. Cover to be removable for access to pump area. | $406 |
| 3305-0033 | Vinyl access cover for fill tower(s). | $201 |
| 3305-0034 | Vinyl [#COL] hose bed cover without attached rear flap(s). Requires rear cover option. | $735 |
| 3305-0035 | Diamond plate hosebed deflector. Located at front of hosebed area with angled front edge. To be hinged along forward edge with "T" style hold-downs. To cover all fill towers. The NFPA hosebed light (as applicable) to be located on trailing edge. | $513 |
| 3305-0036 | TM control panel [#COL] vinyl cover. Includes lower twist locks and velcro front side and top securing. | $401 |
| 3305-0037 | Diamond plate generator cover with expanded metal on top and all (4) sides. | $1,016 |
| 3305-0038 | Vinyl [#COL] crosslay cover top only. | $259 |
| 3305-0039 | Diamond plate speedlay cover. Includes fixed rear portion on rear of module (over backboard storage area if applicable) and hold-open with grab handles on forward area. | $654 |
| 3305-0040 | Nylon black strap with clip release on running board suction tray (EA). Location: [#LOC] | $143 |
| 3305-0041 | Vinyl [#COL] hosebed cover with side twist locks and bungee cord attached rear flap(s). | $1,207 |
| 3305-0044 | Hinged bustin grating cover each side of dunnage pan. Includes permanent mount bustin grating cover over center of dunnage pan. Diamond plate cover to be attached over officer side mounted bustin grating. | $1,057 |
| 3305-0045 | Diamond Plate Storage Pan Cover. Includes (1) grab handle and (2) hold downs. Hinge to the front of the storage pan. | $842 |
| 3305-0048 | Diamond plate cord reel cover. Includes grab handle and hold downs. Hinge to the front of the storage pan. Includes divider wall to isolate cord reel in pan. | $626 |
| 3305-0049 | (4) piece aluminum low profile hosebed cover. Includes center hosebed divider with notched rear fill tower(s) access door(s) and handles (as applicable) (2) gas shocks low profile positive hold-opens/hold-closed at center and at the rear (6) grab handles- (4) fwd cover and (2) fwd area of rear cover with (2) handrails rear of each cover. | $6,336 |
| 3305-0050 | Hosebed cover fill tower support brackets. Includes two (2) "C" shaped plates mounted to the hosebed on either side of the fill tower. Plates are to be as high as the hosebed sides. Includes adding of twist locks to each corner of the hosebed cover tower flap (in addition to the velcro already provided). | $468 |
| 3305-0052 | Vinyl [#COL] hose bed cover with side snaps and bungee cord attached rear flap(s). | $1,207 |
| 3305-0053 | Diamond plate cover for the dunnage pan area. Includes permanently mounted panel under ladder rack and hinged panel over remaining pan. Includes (2) butterfly latches to hold closed. Hinge to the rear of dunnage pan. | $743 |
| 3305-0054 | (3) piece aluminum hosebed cover. Includes cover divider/walkway partion divider and (3) sized as required covers main positive hold open/closed bracket to forward area of hosebed and remaining middle and rear covers to be pinable fill tower(s) access door(s) and handles (as applicable) (1) gas shock each cover to have (2) grab handles located on the inboard side (accessable from the walkway) and a nylon strap attached to each cover for easier closing (attach strap to cover divider so it can be reached at any time while the cover is open) (accessable from the walkway). | $5,436 |
| 3305-0057 | ROM roll-up hose bed cover with satin finish. Inlcudes a momentary switch located [#LOC] and to be easily accessible from the ground. Includes enclosing the operator housing. | $6,594 |
| 3305-0058 | Nylon black cargo cover for running board suction tray. Location: [#LOC]. | $357 |
| 3305-0059 | Customer supplied material for covers. Vinyl Lime Green hosebed cover with attached rear flap and crosslay cover with attached side flaps. | $1,457 |
| 3305-0060 | Diamond plate cover for running board suction tray(s). Includes push-button latches and gator grip. Location(s): [#LOC]. | $378 |
| 3305-0061 | Vinyl black hose bed covers with side twist locks and bungee cord attached rear flap(s). Hose bed to have (1) cover each side of hose bed walkway twist-locks down each side and top of covers. | $2,412 |
| 3305-0064 | Nylon black strap with aluminum quick-release buckle for hose tray. Strap to attach to side walls of tray down low as applicable. Location: [#LOC]. | $117 |
| 3305-0065 | Compartment underbody with slide-out tray. Includes drop down front door with D-ring latch(es). [#LOC] | $2,229 |
| 3305-0068 | Vinyl [#COL] hosebed cover with attached rear flap(s). Cover to have snaps and velcro along front (no awning attachment) and sides. No twist locks. The rear bungees to be tie-in versus sown (use ilets sized to secure a looped and tied bungee). Bungee to be easily removed and replaced (by fire department) in field. | $1,469 |
| 3305-0069 | Diamond plate speedlay cover. Includes fixed rear portion on rear of module (over backboard storage area if applicable) and hold-open with grab handles on rearward area. | $654 |
| 3305-0070 | Diamond plate portable pump cover. | $1,237 |
| 3305-0076 | The mechanical attachments of the side crosslay and rear hosebed covers to be small clip (black) IPO bungees. | $403 |

| Item No. | Description | |
|---|---|---|
| 3305-0078 | Vinyl [#COL] hosebed cover with attached rear flap(s). Includes mechanical attachements at the forward body the four corners of the main and rear body/pump module and velcro along the sides. | $1,062 |
| 3305-0080 | Diamond plate cover for running board suction tray(s). Includes push-button latches and gator grip. Includes cords to prevent covers from dropping to the ground when removed. Location(s): [#LOC]. | $417 |
| 3305-0082 | (4) piece aluminum hose bed cover. Includes center hose bed divider with notched rear fill tower(s) access door(s) and handles (as applicable) (2) gas shocks positive hold-opens/hold-closed at center and at the rear (6) grab handles- (4) fwd cover and (2) fwd area of rear cover with (2) hand rails on rear cover. A landing platform (sized and positioned as required with overall rear end configuration) with embossed diamond plate surface will be centrally located at the upper rear of the apparatus to assist with hose bed cover operations. | $3,125 |
| 3305-0083 | (4) piece aluminum hose bed cover. Includes dividerless cross structure fill tower(s) access door(s) and handles (as applicable) (2) gas shocks positive hold-opens/hold-closed at center and at the rear (6) grab handles- (4) fwd cover and (2) fwd area of rear cover with (2) hand rails on rear cover. A landing platform (sized and positioned as required with overall rear end configuration) with embossed diamond plate surface will be centrally located at the upper rear of the apparatus to assist with hose bed cover operations. | $4,267 |
| 3305-0086 | (4) piece aluminum hosebed cover for use with rear mount body. Includes center hosebed divider with notched rear fill tower(s) access door(s) (as applicable) (2) gas shocks positive hold-opens/hold-closed at center and at the rear (6) grab handles- (4) fwd cover and (2) fwd area of rear cover with (2) handrails on rear cover. A landing platform (sized and positioned as required with overall rearend configuration) with embossed diamond plate surface will be centrally located at the upper rear of the apparatus to assist with hosebed cover operations. | $3,432 |
| 3305-0087 | (4) piece aluminum hosebed cover for use with rear mount body. Includes divider-less cross structure fill tower(s) access door(s) and handles (as applicable) (4) gas shocks positive hold-opens/hold-closed at center and at the rear (6) grab handles- (4) fwd cover and (2) fwd area of rear cover with (2) handrails on rear cover. A landing platform (sized and positioned as required with overall rearend configuration) with embossed diamond plate surface will be centrally located at the upper rear of the apparatus to assit with hosebed cover operations. | $5,096 |
| 3305-0088 | (4) piece aluminum hosebed cover with smooth bottom plate. Includes center hosebed divider with notched rear fill tower(s) access door(s) and handles (as applicable) (2) gas shocks positive hold-opens/hold-closed at center and at the rear (6) grab handles- (4) fwd cover and (2) fwd area of rear cover with (2) handrails on rear cover. | $4,488 |
| 3305-0089 | (4) piece aluminum hose bed cover with smooth bottom plate. Includes dividerless cross structure fill tower(s) access door(s) and handles (as applicable) (2) gas shocks positive hold-opens/hold-closed at center and at the rear (6) grab handles- (4) fwd cover and (2) fwd area of rear cover with (2) hand rails on rear cover. | $4,309 |
| 3305-0091 | Additional (2) gas shocks at the rear of the hosebed cover. | $122 |
| 3305-0092 | Additional positive hold-opens/hold-closed at the front of the hosebed cover. Requires front compartment face folding steps to access pins. | $300 |
| 3305-0093 | Vinyl fire retardent [#COL] hosebed cover with twist locks fasteners and bungee cord attached rear flap(s). | $1,400 |
| 3305-0094 | Fire Retardent Vinyl [#COL] crosslay cover with attached side flaps. | $607 |
| 3305-0095 | Booster Reel Cover. Cover to have roll-top access door with handle and held close with rubber latch. | $1,761 |
| 3305-0099 | Bolt-on aluminum cover for ladder tunnel. To include mounting bracket mounted to underside of dunnage storage pan and or other module/body components. Cover to be removable for access to ladder tunnel area. | $682 |
| 3305-0101 | (4) piece aluminum hosebed cover. Includes center hosebed divider with notched rear fill tower(s) access door(s) with handles (as applicable) (4) gas shocks positive hold-opens/hold-closed at center and at the rear (6) grab handles- (4) fwd cover and (2) fwd area of rear cover with (2) handrails on rear cover. Includes center bracing between forward and rearward covers for mounting of gas shocks for rearward covers. | $3,349 |
| 3305-0102 | Heavy duty Vinyl Black wheel well cover located in compartments L2 and R2. Cover to be full width drop down protector to prevent damage to painted surfaces below the wheel well compartments. | $607 |
| 3305-0118 | Vinyl [#COL] [#LOC] storage tunnel front cover. | $240 |
| 3305-0122 | Vinyl [#COL] upper hose storage cover with attached rear flap located above the ladder tunnel. | $305 |
| 3305-0123 | Powered (2) piece aluminum hose bed cover. Includes center hose bed divider with notched rear fill tower(s) access door(s) with handles (as applicable) (2) electric actuators (2) grab handles forward area of cover with (2) hand rails on rearward area of cover. Partition at front of hose bed to cover electric actuators (approx 4" loss in hose bed length). Includes controls through VMUX system (if so equipped): (2) momentary controls - (1) left cover and (1) right cover. | $6,087 |
| 3305-0124 | Vinyl [#COL] crosslay cover with attached side flaps. Cover to have velcro on the top IPO snaps. | $305 |

| Item No. | Description | |
|---|---|---|
| 3305-0125 | (2) piece aluminum hose bed cover. Includes center hose bed divider with notched rear fill tower(s) access door(s) and handles (as applicable) (2) gas shocks positive hold-opens/hold-closed at rear (2) grab handles on fwd area of cover with (2) hand rails on rear of cover. A landing platform (sized and positioned as required with overall rear end configuration) with embossed diamond plate surface will be centrally located at the upper rear of the apparatus to assist with hose bed cover operations. | $3,125 |
| 3305-0128 | Vinyl rear cover for diamond plate hosebed cover. Cover to be attached with snaps. Color: [#COL]. | $379 |
| 3305-0130 | Vinyl [#COL] crosslay cover with attached side flaps. Cover to have snaps and velcro on the top. No twist locks. The side bungees to be tie-in versus sown (use ilets sized to secure a looped and tied bungee). Bungee to be easily removed and replaced (by fire department) in field. | $516 |
| 3305-0136 | (2) piece aluminum hosebed cover. Includes center hosebed divider with NO notched rear fill tower(s) access door(s) and handles (as applicable) (2) gas shocks positive hold-opens/hold-closed at rear (2) grab handles on fwd area of cover with (2) handrails on rear of cover. A FULL width step (sized and positioned as required with overall rearend configuration) with embossed diamond plate surface will be located at the upper rear of the apparatus to assist with hosebed cover/hose loading operations. | $3,701 |
| 3305-0137 | Powered (2) piece aluminum hosebed cover. Includes center hosebed divider with notched rear fill tower(s) access door(s) and handles (as applicable) (2) eletric actuators (2) grab handles forward area of cover with (2) handrails on rearward area of cover. Partition at front of hosebed to cover electric actuators (approx 4" loss in hosebed length). Includes control panel on officer side rear compartment face with (3) momentary switches: (1) master on/off (1) left cover and (1) right cover. | $7,140 |
| 3305-0138 | Stokes Basket storage box. Located on top of the driver side hosebed cover. To hold (1) stokes basket with access from a horizontally hinged lift-up diamond plate door with a push-button latch. | $876 |
| 3305-0141 | Diamond plate hosebed deflector located at front of hosebed area with angled front edge. To be hinged along forward edge with "T" style hold-downs. | $488 |
| 3305-0142 | Vinyl red side covers for diamond plate crosslay cover. Covers to attach to the DP cover with snaps. The lower corners to have bungee cords. Cords are to be tie-in versus sown. Flaps to have eyelets sized to secure individual looped and tied bungees. Cords to be easily removed and replaced (by fire department) in field. | $312 |
| 3305-0143 | Vinyl rear cover for diamond plate hosebed cover. Cover to attach to the DP cover with snaps. The lower edge to have bungee cords. Cords are to be tie-in versus sown. Flap to have eyelets sized to secure individual looped and tied bungees. Cords to be easily removed and replaced (by fire department) in field. Color: Red | $395 |
| 3305-0144 | (4) piece aluminum hosebed cover. Includes center hosebed divider with notched rear fill tower(s) access door(s) and handles (as applicable) (2) gas shocks positive hold-opens/hold-closed at center and at the rear (8) handrails - (4) forward cover and (4) rearward cover. The enhanced extended landing area(s) will be used to assist with hosebed cover operations. For use with Enhanced Extended Rescue Pumper only. | $3,392 |
| 3305-0145 | Zico ladder control switching wiring cover. | $116 |
| 3305-0147 | Nylon yellow strap with aluminum quick-release buckle for hose tray. Strap to attach to side walls of tray down low as applicable. Location: [#LOC]. | $117 |
| 3305-0149 | Nylon yellow cargo net on sides for crosslay cover. Cover to have snaps in place of bungees. | $317 |
| 3305-0150 | Nylon yellow cargo net at rear of diamond plate or vinyl hosebed cover. Cover to have snaps in place of bungees. | $605 |
| 3305-0157 | Nylon yellow cargo net on sides of speedlay. Covers to have snaps in place of bungees. | $305 |
| 3305-0158 | Diamond Plate Booster Reel Cover. Includes (1) grab handle and (2) hold downs. Hinge towards the front of the storage pan. Includes partitions located around booster reel. | $1,528 |
| 3305-0159 | Hosebed cover hold open devices to be thru bolted on side of 3x3 hosebed side extrusions. | $117 |
| 3305-0163 | Powered (2) piece aluminum hosebed cover with smooth bottom plate. Includes center hosebed divider with notched rear fill tower(s) access door(s) and handles (as applicable) (2) electric actuators (2) grab handles forward area of cover with (2) handrails on rearward area of cover. Partition at front of hosebed to cover electric actuators (approx 4" loss in hosebed length). Includes control panel on driver side rear body with (3) momentary switches: (1) master on/off (1) left cover and (1) right cover. | $6,086 |
| 3305-0164 | Nylon black cargo net hosebed cover with attached rear flap(s). | $1,128 |
| 3305-0166 | Nylon black strap with aluminum quick-release buckle for hose tray. Strap to attach to side walls of tray down low as applicable. For use with rolled hose. Location: [#LOC]. | $128 |
| 3305-0168 | Vinyl [#COL] hose bed cover with side bungee cords without attached rear flap(s). Requires rear cover option. | $1,075 |
| 3305-0169 | Diamond plate cover for the dunnage pan area. Includes (2) butterfly latches to hold closed. Hinge to the rear of dunnage pan. | $743 |
| 3305-0170 | Spring hold down for hose tray. Spring to attach to side wall of tray with scuff plate on pump panel. Location: [#LOC]. | $155 |

| Item No. | Description | |
|---|---|---|
| 3305-0171 | Diamond plate speedlay cover (3/16" diamond plate). Includes fixed rear portion on rear of module (over backboard storage area if applicable) and hold-open with grab handles on rearward area. | $683 |
| 3305-0172 | Diamond plate booster reel cover with open sides for hose deployment. | $905 |
| 3305-0174 | Single diamond plate cover for the crosslay area. Includes applicable grab handle(s) and (2) hold downs. Cover to be embossed diamond plate. | $663 |
| 3305-0175 | Vinyl fire retardent [#COL] hose bed cover with attached rear flap(s). | $1,084 |
| 3305-0176 | Vinyl fire retardent [#COL] side covers for diamond plate crosslay cover. | $239 |
| 3305-0177 | Vinyl fire retardent [#COL] cover for running board suction tray. Location: [#LOC]. | $239 |
| 3305-0178 | One piece vinyl fire retardent cover for top mount pump panel opening. Top of vinyl fire retardent cover outboard corners to have twist locks with velcro around permetier. Color to be [#COL]. | $835 |
| 3305-0179 | (2) piece aluminum hosebed cover. Includes divider-less cross structure fill tower(s) access door(s) and handles (as applicable) (2) gas shocks positive hold-opens/hold-closed at rear (2) grab handles on fwd area of cover with (2) handrails on rear of cover. A landing platform (sized and positioned as required with overall rearend configuration) with embossed diamond plate surface will be centrally located at the upper rear of the apparatus to assist with hosebed cover operations. | $3,962 |
| 3305-0180 | Vinyl [#COL] hose bed cover with side bungee cords and attached rear flap(s). Includes large pull tabs to ease securing cover while wearing gloves. | $1,317 |
| 3305-0181 | Vinyl [#COL] hosebed cover with side twist locks with Velcro in between the twist locks and bungee cord attached rear flap(s). | $1,445 |
| 3305-0182 | Hold open retaining pin for aluminum crosslay (single or bi-fold) cover. Locate as required based off options on module. | $152 |
| 3305-0183 | Vinyl [#COL] crosslay cover with attached side flaps with bungee cord. | $380 |
| 3305-0184 | Vinyl [#COL] side covers for diamond plate crosslay cover. Includes large pull tabs to ease securing end flaps while wearing gloves. | $191 |
| 3305-0185 | Nylon red cargo cover for running board suction tray. Location: [#LOC]. | $385 |
| 3305-0186 | Nylon red cargo net on sides for crosslay cover. | $252 |
| 3305-0187 | Nylon red cargo net at rear of diamond plate or vinyl hose bed cover. | $598 |
| 3305-0188 | Nylon black strap with footman loops and Velcro closure to secure hose. Location: [#LOC]. | $92 |
| 3305-0189 | The rear flap(s) of the hosebed cover shall be upgraded to add weight to the bottom of the rear vertical flap(s). | $540 |
| 3305-0190 | (4) piece aluminum hosebed cover. Includes off center hosebed divider located 8" left of center (NOT CENTERED) with notched rear fill tower(s) access door(s) and handles (as applicable) (4) gas shocks positive hold-opens/hold-closed at center and at the rear (6) grab handles- (4) fwd cover and (2) fwd area of rear cover with (2) handrails on rear cover. Includes center bracing between forward and rearward covers for mounting of gas shocks for rearward covers. | $3,891 |
| 3305-0191 | Vinyl rear cover for diamond plate hose bed cover using California Type 3 straps IPOS. Color: [#COL]. | $411 |
| 3305-0193 | Hold open device(s) shall be provided. Rubber plunger type hold downs(s) shall hold the aluminum crosslay cover(s) (single or bi-fold) in the open position. | $210 |
| 3305-0194 | Bi-Fold diamond plate cover for the crosslay area. Includes applicable grab handles (2) hold downs and magnetic door ajar switch(s). | $1,012 |
| 3305-0195 | (4) piece aluminum hose bed cover. Includes divider-less cross structure fill tower(s) access door(s) and handles (as applicable) (2) gas shocks positive hold-opens/hold-closed at center and at the rear (6) grab handles- (4) fwd cover and (2) fwd area of rear cover with (2) hand rails on rear cover. A landing platform (10" in depth the width shall be sized and positioned as required with overall rear end configuration) with embossed diamond plate surface will be centrally located at the upper rear of the apparatus to assist with hose bed cover operations. | $4,267 |
| 3305-0196 | Diamond plate cover for the dunnage pan area. Includes (2) butterfly latches to hold closed and (1) grab handle mounted between butterfly latches. Hinge to the front of dunnage pan. | $743 |
| 3305-0197 | Hose bed deflector. The diamond plate deflector shall be bolted in place on the front of hose bed area with an angled top edge to shield rain and wind from the frontal area of the hose bed. | $513 |
| 3305-0199 | Double diamond plate cover for each outboard hose storage area on the Low Hosebed body. Includes applicable grab handle(s) and (2) hold downs on each cover. Covers to be embossed diamond plate and hinged outboard. | $1,516 |
| 3305-0200 | Vinyl [#COL] end covers for upper outboard hose storage of the hosebed. | $191 |
| 3305-0201 | Bi-Fold smooth plate cover for the crosslay area. Includes applicable grab handles and (2) hold downs. The cover to be painted black durabak. | $1,068 |

| Item No. | Description | |
|---|---|---|
| 3305-0202 | (4) Piece aluminum smooth plate with black Scorpion coating (IPOS diamond plate) hosebed cover for use with rear mount body. Includes center hosebed divider with notched rear fill tower(s) access door(s) (as applicable) (2) gas shocks positive hold-opens/hold-closed at center and at the rear (6) grab handles- (4) fwd cover and (2) fwd area of rear cover with (2) handrails on rear cover. A landing platform (sized and positioned as required with overall rear end configuration) with aluminum smooth plate with black Scorpion coating (IPOS diamond plate) surface will be centrally located at the upper rear of the apparatus to assist with hosebed cover operations. | $3,870 |
| 3305-0203 | Nylon black strap with aluminum quick-release buckle for tailboard hose tray(s). Strap to attach to side walls of tray down low as applicable. | $117 |
| 3305-0204 | (4) piece aluminum hosebed cover for use with rear mount body. Includes center hosebed divider with notched rear fill tower(s) access door(s) (as applicable) (2) gas shocks positive hold-opens/hold-closed at center and at the rear (6) grab handles- (4) fwd cover and (2) fwd area of rear cover with (2) handrails on rear cover. A landing platform (sized and positioned as required with overall rearend configuration) with embossed diamond plate and gator grip surface will be centrally located at the upper rear of the apparatus to assist with hosebed cover operations. | $3,432 |
| 3305-0205 | Vinyl [#COL] side covers for diamond plate crosslay cover. Covers to attach to the DP cover with snaps. The lower corners shall be secured in place using California type straps (2) each side IPOS. These straps shall function to allow each strap to be looped around the horizontal crosslay roller on each side as part of the attach system. | $386 |
| 3305-0206 | Vinyl [#COL] hose bed cover using Nitrogen/Oxygen type straps (2) attach positions each side (4) total to secure the rear flap(s) IPOS. The upper straps shall be sewn in place leaving the ratchet clamp approximately half way or mid height of the rear flap(s). The bottom straps shall be fastened to a strap tie down mounted slightly above the horizontal handrail in line with the sewn in straps above (4) total top and (4) total bottom. The bottom straps shall feed directly above to the ratchet clamps (sewn in) as part of the attach/securing system. | $1,645 |
| 3305-0207 | Vinyl [#COL] hose bed cover with side bungee cords for main hose bed storage area. Seperate cover w/snaps and attached rear flap for hose chute(s). Aerial application only. | $1,207 |
| 3305-0208 | Cargo net for inside compartment for containing cribbing in compartment when door is opened. Net to permanently fasten on rearward wall just inside door opening and fasten with buckle straps on forward wall just inside door opening. Cargo netting will be 3" x 3" squares. Location: [#LOC]. | $830 |
| 3305-0209 | Smooth plate speedlay cover painted gray durabak. Includes fixed rear portion on rear of module (over backboard storage area if applicable) and hold-open with grab handles on rearward area. | $836 |
| 3305-0210 | Diamond plate cover for the dunnage pan area. Includes permanently mounted panel under ladder rack and hinged panel over remaining pan. Includes (2) butterfly latches to hold closed to include gas spring(s) as hold open device. Hinge to the rear of dunnage pan. | $777 |
| 3305-0211 | (2) piece aluminum hosebed cover. Includes center hosebed divider with NO notched rear fill tower(s) access door(s) and handles (as applicable) (2) gas shocks positive hold-opens/hold-closed at rear (2) grab handles on fwd area of cover with (2) handrails on rear of cover. | $3,701 |
| 3305-0212 | Vinyl fire retardent [#COL] hosebed cover with twist locks fasteners and bungee cord attached rear flap(s). Cover to be partial hosebed cover leaving hosebed walkway area uncovered. To extend full length of the hosebed from roof top compartment on the side to divider against walkway in the middle and to hosebed storage pan rearward mounting flange at the front. | $1,400 |
| 3305-0213 | (4) Piece aluminum hose bed cover. Includes divider-less cross structure fill tower(s) access door(s) and handles (as applicable) (2) gas shocks custom positive hold-open devices at the rear and separate hold closed devices (see photos in file) (6) grab handles- (4) fwd cover and (2) fwd area of rear cover with (2) 18" hand rails on rear cover mounted inboard not to interfere with upper warning lights. | $4,356 |
| 3305-0214 | Nylon black cargo net at rear of diamond plate or vinyl hose bed cover. Notched for hosebed storage compartment(s) and door(s) as required. | $565 |
| 3305-0215 | Vinyl [#COL] hose bed cover with attached rear flap(s). Cover to have snaps and velcro along front (NO awning attachment) and velcro along sides. No twist locks. | $868 |
| 3305-0217 | Vinyl [#COL] hosebed cover with attached rear flap(s). Cover to have bungees on sides ipo velcro. Bungee to be easily removed and replaced (by fire department) in field. | $1,469 |
| 3305-0218 | (4) piece aluminum smooth plate hosebed cover (flat profile with no pitch) painted with Durabak black coating. Includes center hosebed divider with notched rear notch for boom support fill tower(s) access door(s) and handles (as applicable) (2) gas shocks positive hold-opens/hold-closed at center and at the rear (6) grab handles- (4) fwd cover and (2) fwd area of rear cover with (2) handrails rear of each cover. The enhanced extended landing area(s) will be used to assist with hosebed cover operations. For 50' Teleboom with Enhanced Extended Rescue. | $7,224 |
| 3305-0219 | (2) piece light weight aluminum hose bed cover. Includes center hose bed divider with notched rear (as applicable) fill tower(s) access door(s) and handles (as applicable) gas shocks positive hold opens/hold closed at rear (2) grab handles front and (2) hand rails rear. | $3,055 |

| Item No. | Description | |
|---|---|---|
| 3305-0220 | (2) piece light weight aluminum hose bed cover. Includes dividerless cross structure fill tower(s) access door(s) and handles (as applicable) (2) gas shocks positive hold-opens/hold-closed at the rear (2) grab handles (fwd) and (2) hand rails (rear). | $3,055 |
| 3305-0222 | Vinyl rear cover for diamond plate hosebed cover. Cover to be attached with bungee cords at all attachment positions. Color: [#COL]. | $383 |
| 3305-0223 | Nylon black cargo net on sides of speedlay. Cover to be attached with bungee cords at all attachment positions. | $328 |
| 3305-0227 | Vinyl fire retardant rear cover for diamond plate hose bed cover. Color: [#COL]. | $296 |
| 3305-0228 | Fire Retardent Vinyl [#COL] side covers for diamond plate crosslay cover. | $381 |
| 3305-0231 | Powered (2) piece aluminum hosebed cover with notch built into the officer side rear corner (to miss monitor are mounted). Includes center hosebed divider with notched rear fill tower(s) access door(s) and handles (as applicable) (2) electric actuators (2) grab handles forward area of cover with (2) handrails on rearward area of cover. Partition at front of hosebed to cover electric actuators (approx 4" loss in hosebed length). Includes control panel on left rear of body above taillights with (3) momentary switches: (1) master on/off (1) left cover and (1) right cover. | $6,967 |
| 3305-0234 | Powered (2) piece aluminum hose bed cover. Includes center hose bed divider with notched rear fill tower(s) access door(s) and handles (as applicable) (2) electric actuators (2) grab handles forward area of cover with (2) hand rails on rearward area of cover. A landing platform (sized and positioned as required with overall rear end configuration) with embossed diamond plate surface will be centrally located at the upper rear of the apparatus to assist with hose bed cover operations. Partition at front of hose bed to cover electric actuators (approx 4" loss in hose bed length). Includes (2) momentary controls - (1) left cover and (1) right cover. | $6,315 |
| 3305-0238 | Vinyl [#COL] hose bed covers with attached rear flaps. Two Seperate covers for bi-level hose bed sides stepped to clear overhead rack assembly. | $1,042 |
| 3305-0241 | Bi-fold style diamond plate cover for running board suction tray(s) hinged outboard from pump panels. Includes butterfly latches and gator grip. Location(s): [#LOC]. | $417 |
| 3305-0242 | Bolt-on aluminum cover for the forward end of the driver side storage tunnel. To include mounting bracket mounted to underside of dunnage storage pan and or other module/body components as necessary. Cover to be removable for access to tunnel area. | $392 |
| 3305-0243 | Vinyl [#COL] crosslay cover with attached side flaps. Includes side snaps. | $379 |
| 3305-0244 | Cargo net: Black nylon with 2 inch openings mechanical type hold downs and notch to accommodate pan mounted options if applicable. Locate in upper eMAX forward module roof pan area. | $1,255 |
| 3305-0246 | Smooth plate aluminum rear covers for the application of applicable chevrons mounted on the ends of the top outboard hose bed storage areas. Includes vertical hinge each side and a non-locking D-ring latch. Doors to be wired to door ajar circuit. Storage areas to be open to the top and shall be used for misc. equipment to be added/secured as applicable to NFPA by customer/dealer. Not identified to be used as loose hose storage. | $808 |
| 3305-0247 | Diamond plate vertically hinged door each side of the 2.5" crosslay hinge rearward. Includes thumb latch and wiring for door ajar switch. | $375 |
| 3305-0248 | (2) piece aluminum hose bed cover. Includes dividerless cross structure fill tower(s) access door(s) and handles (as applicable) (2) gas shocks positive hold-opens/hold-closed at the rear (2) grab handles (fwd) (2) grab handles rear and (2) hand rails (rearend). | $4,362 |
| 3305-0249 | The mechanical attachments of the side speedlay and rear hosebed covers to be small clip (black) IPO bungees. | $393 |
| 3305-0250 | Diamond plate speedlay cover painted gray Zolatone. Includes fixed rear portion on rear of module (over backboard storage area if applicable) and hold-open with grab handles on rearward area. | $876 |
| 3305-0251 | Powered (2) piece aluminum smooth plate hosebed cover and painted black Durabak. Includes center hose bed divider with notched rear fill tower(s) access door(s) and handles (as applicable) (2) electric actuators (2) grab handles forward area of cover with (2) hand rails on rearward area of cover. Partition at front of hose bed to cover electric actuators (approx 4" loss in hose bed length). Includes controls through VMUX system (if so equipped): (2) momentary controls - (1) left cover and (1) right cover. | $7,609 |
| 3305-0252 | Nylon black cargo net hosebed cover with side bungee cords and attached rear flap(s). Rear Cover notched for hosebed storage compartment(s) and door(s) as required. | $1,600 |
| 3305-0253 | One piece vinyl cover for top mount pump panel opening. Top of vinyl cover outboard corners to have twist locks with velcro around permetier. Color to be [#COL]. | $835 |
| 3305-0254 | Wiring covers in roof top compartments. | $348 |
| 3305-0259 | Nylon black cargo net at rear of diamond plate or vinyl hose bed cover w/(2) aluminum quick release buckles. | $793 |
| 3305-0260 | Nylon black cargo net end flaps w/(2) aluminum quick release buckles on each side for crosslay cover. | $564 |
| 3305-0263 | Removable diamond plate cover for the crosslay area. Includes applicable grab handles and aluminum fabricated brackets with safety pins for hold downs. | $890 |

| Item No. | Description | |
|---|---|---|
| 3305-0264 | Diamond plate cover for running board suction tray(s). Includes butterfly latches and gator grip. Includes cords to prevent covers from dropping to the ground when removed. Location(s): [#LOC]. | $417 |
| 3305-0265 | Vinyl rear cover for diamond plate hose bed cover. The top of the cover shall be mechanically attached to the rear hose bed cover extrusion with over lapping flaps in the center secured with velcro. The lower portion of the cover shall be secured in place with heavy duty nylon straps. The lower portion fasteners shall be mounted at pick up. Color: Red. | $395 |
| 3305-0267 | (4) piece aluminum hose bed cover. Includes divider-less cross structure fill tower(s) access door(s) and handles (as applicable) (4) 153 lb gas shocks positive hold-opens/hold-closed at center and at the rear (6) grab handles- (4) fwd cover and (2) fwd area of rear cover with (2) hand rails on rear cover. A landing platform (10" in depth the width shall be sized and positioned as required with overall rear end configuration) with embossed diamond plate surface will be centrally located at the upper rear of the apparatus to assist with hose bed cover operations. | $4,350 |
| 3305-0268 | Diamond plate cover for the dunnage pan area. Includes (2) butterfly latches to hold closed and (2) gas shocks as hold open device. Cover to hinge to the rear of dunnage pan and open a full 90 deg. | $777 |
| 3305-0271 | Nylon black cargo net end cover for driver side upper outboard hose storage of the hosebed. | $145 |
| 3305-0274 | Vinyl black hose bed cover with attached rear flap on one side only to the top of the hose bed storage compartment. | $868 |
| 3305-0276 | Vinyl red crosslay cover top with attached nylon red cargo net on each side of cover. | $582 |
| 3305-0277 | Vinyl rear cover for diamond plate hose bed cover. Cover shall attach to hard cover optioned and have weighted bottom edge with additional shock cord attaching cords to comply with NFPA current version. Cover shall be split in the center along hard cover center or divider at center of hose bed. D&S custom covers brand NFPA compliant with reflective vellow and red "A" chevrons. | $869 |
| 3305-0278 | The hose bed center divider/support for the hosebed cover shall be offset to meet the hoseload and/or storage requirements. | $169 |
| 3305-0280 | Nylon black strap with aluminum quick-release buckle for hose tray. Location: to be mounted at final inspection. [#LOC]. | $117 |
| 3305-0281 | (4) piece aluminum hose bed cover. Includes center hose bed divider with notched rear fill tower(s) access door(s) and handles (as applicable) (2) gas shocks positive hold-opens/hold-closed at center and at the rear (6) grab handles- (4) fwd cover and (2) fwd area of rear cover with (2) hand rails on rear cover. Requires an Intermediate rear step located at the upper rear of the apparatus to assist with hose bed cover operations. | $3,125 |
| 3305-0282 | Vinyl black hose bed cover with nylon black strap with footman loops and Velcro closure to secure hosebed cover without attached rear flap(s). Requires rear cover option. | $1,075 |
| 3305-0283 | Nylon black cargo net at rear of diamond plate or vinyl hosebed cover. Cover to have nylon black strap with footman loops and Velcro closure to secure hosebed end flap. | $605 |
| 3305-0284 | Diamond plate hose bed deflector. Aluminum tread plate .25 in thick. Located at front of hosebed area with angled front edge. The NFPA hosebed light (as applicable) to be located on trailing edge and provisions added to secure hose bed vinyl cover along forward edge below deflector. Top of shield to extend upwards approx. 5 in. above hose bed top extrusion and approx. 10.5 in. rearward to trailing edge from front of body. | $307 |
| 3305-0285 | Powered (2) piece aluminum hosebed cover with smooth bottom plate. Includes center hosebed divider with notched rear fill tower(s) access door(s) and handles (as applicable) (2) electric actuators (2) grab handles forward area of cover with (2) handrails on rearward area of cover. Partition at front of hosebed to cover electric actuators (approx 4" loss in hosebed length). Includes control panel [#LOC] with (3) momentary switches: (1) master on/off (1) left cover and (1) right cover. | $6,086 |
| 3305-0286 | Cover for side ladder tunnel forward end. Cover shall be fabricated from flat smooth plate aluminum and be easily removable for access to the forward end of the ladder tunnel for clean out. Usable only on body configurations where the ladders do NOT extend into pump module. | $277 |
| 3305-0287 | (4) piece aluminum hosebed cover (flat profile with no pitch). Includes center hosebed divider with notched rear fill tower(s) access door(s) (as applicable) (2) gas shocks positive hold-opens/hold-closed at center and at the rear (6) grab handles- (4) fwd cover and (2) fwd area of rear cover. (2) handrails on back lip of hosebed cover due to overall height restriction. A landing platform (sized and positioned as required with overall rear end configuration) with embossed diamond plate surface will be centrally located at the upper rear of the apparatus to assist with hose bed cover operations. | $4,583 |
| 3305-0291 | Nylon red cargo net on sides of speedlay. | $305 |
| 3305-0292 | Removable diamond plate cover for the hydraulic power supply for E-ONE 2 arm ladder rack for use in top side dunnage or storage pan mounting applications. Includes flush access door with thumb latch to inspect or fill hydraulic reservoir. To include NO STEP tags as applicable. | $376 |
| 3305-0293 | (2) piece aluminum smooth platehose bed cover and painted black Durabak.. Includes dividerless cross structure fill tower(s) access door(s) and handles (as applicable) (2) gas shocks positive hold-opens/hold-closed at the rear (2) grab handles (fwd) and (2) hand rails (rear). | $5,334 |

| Item No. | Description | |
|---|---|---|
| 3305-0294 | Vinyl red cover for fire extinguisher box. Cover to attach to the shelf lip with snaps. The lower corners to have bungee cords. | $312 |
| 3305-0296 | (2) piece aluminum hose bed cover and painted black Durabak with smooth bottom plate. Includes center hose bed divider with notched rear (as applicable) fill tower(s) door(s) and handles (as applicable) gas shocks positive hold opens/hold closed at rear (2) grab handles front and (2) hand rails rear. | $4,025 |
| 3305-0297 | Crosslay cover to be a diamond plate three (3) piece cover. Forward and middle covers w/center section below aerial fixed with hinged outside panels above swivel connections. Full width hinged cover over rearward dry lay storage area (hinged forward). Includes applicable grab handles and (4) hold downs. | $1,807 |
| 3305-0300 | Nylon black cargo net on sides for crosslay cover. Note: Side flaps are to be interchangeable from side to side. | $324 |
| 3305-0302 | LINE-X package for Pump Module top cover(s): Includes exterior surfaces only on all crosslay/speedlay cover(s) and top surface of backboard storage and deck gun channel as applicable. | $202 |
| 3305-0303 | LINE-X package for aluminum hosebed cover(s): Includes exterior surfaces only on hosebed cover(s) including fabricated hold opens and access door(s) for fill towers etc as applicable. Also includes the rear intermediate step/platform under the hosebed. | $1,669 |
| 3305-0304 | Crosslay cover to be a diamond plate three (3) piece cover. Forward crosslay cover (hinged forward) and second crosslay cover (hinged rearward) are each a two piece cover which includes a separate cover for access to swivel connections when the aerial is bedded. One piece cover over rearward dry lay storage area (hinged forward). Includes applicable grab handles and (6) butterfly latches. | $1,807 |
| 3305-0305 | Vinyl [#COL] hose bed cover with attached rear flap(s). End flap(s) to have nylon webbing straps with stainless steel spring buckles and footman loops to secure cover closed. | $912 |
| 3305-0306 | Vinyl Black hosebed cover with twist locks fasteners and nylon strap attached rear flap(s). | $911 |
| 3305-0307 | Vinyl [#COL] hose bed cover with attached rear flap(s). Cover to have snaps and velcro along front (NO awning attachment) and velcro along sides. Rear of cover to be attached with snaps (no bungee). | $868 |
| 3305-0308 | R.O.M. power hose bed cover to be supplied with NFPA compliant walk surface option. | $223 |
| 3305-0309 | Vinyl rear cover for ROM power hose bed cover. Color: Black | $444 |
| 3305-0310 | The mechanical attachments of the side crosslays and rear hosebed covers to be small clip (black) IPO bungees. | $393 |
| 3305-0311 | Vinyl [#COL] hose bed cover with side bungee cords and attached rear flap(s). Cover to accommodate main hose bed and side auxiliary hose bed above ladder tunnel. Top of cover to be one piece and rear cover to be one piece with two flaps to cover each storage area. | $1,593 |
| 3305-0314 | Nylon black cargo net crosslay cover with attached side flaps. | $417 |
| 3305-0317 | Vinyl [#COL] hose bed cover with attached rear flap(s). Rear face of body to have twist locks to hold down rear flap(s). | $868 |
| 3305-0318 | Two (2) piece aluminum hosebed cover.The rear section shall roll over the forward section on tracks and rollers. When rolled open the two sections shall lift upward on a forward mounted stainless steel piano hinge to assist in loading hose. Includes appropriate handrails per NFPA guidelines. | $3,580 |
| 3305-0319 | D&S brand vinyl hose bed cover with removable attached rear flap(s). Top cover to be heavy duty red vinyl with shock cord attaching system and rear nylon buckles with straps to attach rear flap. Rear flap to be matching heavy duty red vinyl with shock cords and mating buckles. Rear flap to feature weighted bottom skirting and have Yellow reflective letters centered "WEMA" as large as possible with weighted bottom per application. | $1,342 |
| 3305-0320 | OBSOLETE - USE 3305-0387 D&S brand nylon red cargo net on sides for cross lay cover with shock cord attaching system. One pair of covers. | $340 |
| 3305-0321 | The mechanical attachments of the side crosslay covers to be small clip (black) IPO bungees. | $393 |
| 3305-0326 | OBSOLETE ON ALL TRUCKS ORDERED AFTER MAY 2016 - USE 3305-0387 INSTEAD D&S Custom Covers brand heavy duty 22 oz. Nylon black cargo net on sides for speed lay with shock cord attaching system. One pair of covers. | $340 |
| 3305-0328 | Vinyl [#COL] upper storage area cover without attached rear flap(s) located above the ladder tunnel. Requires rear cover option. | $305 |
| 3305-0330 | (2) piece aluminum hose bed cover for officer side of hosebed. Includes hose bed divider fill tower(s) access door(s) and handles (as applicable) (1) gas shocks positive hold-opens/hold-closed at center and at the rear (3) grab handles-(2) fwd cover and (1) fwd area of rear cover with (1) hand rail on rear cover. A full width landing platform (sized and positioned as required with overall rear end configuration) with embossed diamond plate surface will be centrally located at the upper rear of the apparatus to assist with hose bed cover operations. | $2,469 |
| 3305-0331 | Single diamond plate cover for the crosslay area. Includes (2) hold downs. NO grab handle(s) on cover. | $603 |
| 3305-0334 | Vinyl [#COL] hose bed cover with attached rear flap(s) with straps and 1in. Delrin buckles. | $917 |

| Item No. | Description | |
|---|---|---|
| 3305-0335 | Vinyl [#COL] speed lay side covers with 1 inch Delrin buckles. | $243 |
| 3305-0336 | Cargo Net Cover for B1 compartment. Cargo netting will be 2" x 2" squares and black in color. The bottom edge of the cover shall be mechanically attached to the body. The top and sides of the cover shall be held in place with nylon covered elastic synthetic rubber cord with stainless steel hooks. | $637 |
| 3305-0337 | Diamond plate cover for forward dunnage area above the speedlays. Includes applicable grab handle(s) gas spring hold opens and latching hold downs. Cover to be embossed diamond plate and hinged forward. Cover to be wired to door ajar. | $814 |
| 3305-0338 | (2) lift-up top hatch covers above the pump enclosure non-skid aluminum treadplate with double D-ring latches in each door. Covers hinged forward and latching at rear area full length and width of upper pump house area. | $1,183 |
| 3305-0339 | Vinyl red crosslay cover top with attached nylon black cargo net on each side of cover. Vinyl cover to be attached with twist locks only (No snaps). | $582 |
| 3305-0341 | Powered (2) piece aluminum hosebed cover with smooth bottom plate. Includes center hosebed divider with notched rear fill tower(s) access door(s) and handles (as applicable) (2) electric actuators (4) recessed handles (2) forward and (2) rearward area of cover with (2) handrails on trailing edge of cover. Partition at front of hosebed to cover electric actuators (approx 4" loss in hosebed length). Includes control panel [#LOC] with (3) momentary switches: (1) master on/off (1) left cover and (1) right cover. | $6,482 |
| 3305-0345 | Nylon black strap with aluminum quick-release buckle for hose tray. Strap to attach to side walls of tray as high as applicable. Location: [#LOC]. | $117 |
| 3305-0346 | Nylon black cargo net w/(2) pull straps and aluminum quick release buckles on each side for crosslay cover. Cargo net end flaps to be fasten at the front of the crosslay with twist locks and at the rear with the female portion of buckle at top and bottom corners. Includes (2) 2" aluminum quick release buckles (female end) to be attached at top and bottom of the cargo net on the rear of the crosslay opening to hold cargo net in place with the male portion attached to the module. Orange 1" nylon pull strap to be attached to the paddle to release for quick drop down access. Note pull straps to be attached to the crosslay with approx 5" hand loop at end and velcro on the back to hold in place during travel. | $564 |
| 3305-0348 | TM control panel black vinyl cover. Includes upper twist locks and velcro front side and bungee cords on bottom. | $401 |
| 3305-0350 | D&S brand heavy duty [#COL] vinyl cover for running board suction tray. Location: [#LOC]. | $385 |
| 3305-0351 | D&S Custom Covers brand heavy duty [#COL] vinyl cover on sides for cross lay cover with shock cord attaching system. One pair of covers. | $348 |
| 3305-0352 | D&S brand 22 oz heavy duty [#COL] vinyl hose bed cover with attached vinyl rear flap. Top cover fastened at the front and both sides using patented shock cord system. Rear flap with weighted end attached with nylon buckles at bottom and attached to the top cover using a zipper. | $1,289 |
| 3305-0353 | Heavy duty black nylon cargo netting with airline style quick release buckles shall be installed at the rear apparatus hose bed. | $757 |
| 3305-0355 | Heavy duty black nylon cargo netting with airline style quick release buckles shall be installed on either side of the crosslay/speedlay hose storage areas. | $418 |
| 3305-0358 | Diamond plate cover for driver side outboard hose storage area on the Low Hosebed body. Includes applicable grab handle(s) and (2) hold downs. Cover to be embossed diamond plate and hinged outboard. Cover to be wired to door ajar. | $759 |
| 3305-0359 | (1) piece aluminum hose bed cover. Includes fill tower(s) access door(s) and handles (as applicable) (1) gas shock positive hold-open/hold-closed at the rear (1) grab handle (fwd) and (1) hand rail (rear). | $2,882 |
| 3305-0360 | Embossed diamond plate (No gator grip) cover for running board suction tray(s). Includes push-button latches. Cover shall prevent water intrusion in the tray. Location(s): [#LOC]. | $416 |
| 3305-0361 | Diamond plate hosebed deflector 12" long located at front of hosebed area. Leading edge to be tapered hinged along forward edge with stainless steel piano hinge fastened with quarter turn latches. Includes a black vinyl hose bed cover attached to trailing edge of the deflector using Velcro and extending to the rear of the hose bed secured with side Velcro attachment. Rear of hose bed has cargo net secured to drivers side and quick release buckles on officer side. | $2,452 |
| 3305-0362 | Nylon black strap with aluminum quick-release buckle for officer side hose tray. Strap to attach to TOP of tray. | $117 |
| 3305-0363 | Vinyl rear cover for ROM power hose bed cover. Color: Red | $444 |
| 3305-0364 | Vinyl red cover for fire extinguisher box. Cover to attach with snaps. The lower corners to have bungee cords. | $312 |
| 3305-0366 | Diamond Plate Storage Pan Cover. Includes (1) grab handle and (2) Tri-Mark latches. Hinge to the front of the storage pan. | $1,151 |
| 3305-0367 | Black vinyl speedlay cover. Includes (2)single piece covers(1 each side). The cover to be attached at the bottom with slide and pull-down bungees at the top. | $564 |
| 3305-0368 | A chrome handle will be attached to each side of the diamond plate cover in addition to the standard handles centered front to rear on top outboard. | $236 |

| Item No. | Description | |
|---|---|---|
| 3305-0369 | Diamond plate hosebed deflector 18" long located at front of hosebed area. Leading edge to be tapered hinged along forward edge with stainless steel piano hinge fastened with quarter turn latches. Includes a black vinyl hose bed cover attached to trailing edge of the deflector using Velcro and extending to the rear of the hose bed secured with side Velcro attachment. Rear of hose bed has cargo net secured to drivers side and quick release buckles on officer side. | $2,452 |
| 3305-0371 | OBSOLETE: USE 3305-0392 (except SO# 140357) D&S Custom Covers brand heavy duty 22 oz. vinyl hose bed cover with removable attached rear flap(s). Top cover to be heavy duty black vinyl with shock cord attaching system and rear nylon buckles with straps to attach rear flap. Rear flap to be heavy duty black cargo net with shock cords and mating buckles. Rear flap to feature weighted bottom skirting. | $1,289 |
| 3305-0373 | D&S brand 22 oz heavy duty [#COL] vinyl hosebed rear flap. For use with aluminum hosebed cover (added seperately). Rear flap with weighted end attached with nylon buckles at bottom and attached to the top cover using a zipper. | $666 |
| 3305-0374 | D&S Custom Covers brand heavy duty black cargo net on sides for combined speed lay cover with bottom footman's loop attaching points and top seatbelt style pull release straps. Top seat belt style buckles to feature a lanyard pull attached to each corner seatbelt release to extend down and join to a common pull point. Pulling lanyard shall release both buckles and allow net to drop down for rapid deployment on-scene One pair of covers sized to allow for a single cover each side over two speed lay chutes. | $666 |
| 3305-0376 | Nylon black cargo net at rear of truck for lower storage. | $565 |
| 3305-0377 | A chrome handle will be attached to the diamond plate hosebed cover access door. | $118 |
| 3305-0378 | The reaward hosebed cover flap to be notched for access of backboard storage box. | $96 |
| 3305-0379 | Vinyl cover located forward pump module open storage area. Includes mechanical hold-downs on top outer corners and quick release side flap hold downs. Cover color: Black | $300 |
| 3305-0381 | D&S brand heavy duty vinyl [#COL] crosslay cover with attached side flaps. | $573 |
| 3305-0383 | Vinyl Black hosebed cover with attached rear flap(s). Cover to have Twist locks and velcro along front and sides (no awning attachment) No snaps. The rear bungees to be tie-in versus sown (use ilets sized to secure a looped and tied bungee). Bungee to be easily removed and replaced (by fire department) in field. | $1,469 |
| 3305-0384 | Red & Lime Yellow "A" pattern chevron sewn with PTFE thread on D&S Custom Covers brand hosebed rear flap (cover added seperately). | $408 |
| 3305-0385 | Reflective [#COL] letters as large as possible (up to 12") inlayed sewn with PTFE thread on D&S Custom Covers brand hosebed rear flap (cover added seperately). | $58 |
| 3305-0386 | Reflective [#COL] letters as large as possible (up to 20") inlayed sewn with PTFE thread on D&S Custom Covers brand hosebed rear flap (cover added seperately). | $98 |
| 3305-0387 | D&S brand [#COL] cargo net covers (pair) for crosslay sides. To be used with aluminum crosslay cover. Side covers to be attached to the aluminum top cover using twist locks. Bottom of the side covers attached using patented shock cord system with pull tabs. | $468 |
| 3305-0388 | D&S brand [#COL] cargo net covers (pair) for speedlay sides. One pair shall cover one speedlay opening. Cover attached using patented shock cord system with pull tabs on top corners and at the center and nylon buckles at the bottom corners. | $384 |
| 3305-0389 | D&S brand [#COL] cargo net covers (pair) for speedlay sides. All speedlay openings covered using a single cover. Cover attached using patented shock cord system with pull tabs on top corners of top most speedlay and in between each speedlay and nylon buckles at the bottom corners of bottom most speeday. | $612 |
| 3305-0392 | D&S brand 22 oz heavy duty [#COL] vinyl hose bed cover with attached cargo net rear flap. Top cover fastened at the front and both sides using patented shock cord system. Rear flap attached with nylon buckles at bottom and attached to the top cover using a zipper. | $1,299 |
| 3305-0393 | D&S brand 22 oz heavy duty vinyl boot over the water fill tower. Attached to and same color as the main vinyl hosebed cover. | $261 |
| 3305-0394 | D&S brand [#COL] cargo net covers for speedlay front opening. One cover per opening. Cover attached using patented shock cord system with pull tabs on top corners and in between corners and nylon buckles at the bottom corners. | $384 |
| 3305-0395 | D&S brand [#COL] cargo net cover for speedlay front openings. One cover for all openings. Cover attached using patented shock cord system with pull tabs on top corners and in between corners and nylon buckles at the bottom corners. | $612 |
| 3305-0396 | D&S brand 22 oz heavy duty [#COL] vinyl covers for speedlay front opening. One cover per opening. Cover attached using patented shock cord system with pull tabs on top corners and in between corners and nylon buckles at the bottom corners. | $384 |
| 3305-0397 | D&S brand 22 oz heavy duty [#COL] vinyl cover for speedlay front openings. One cover for all openings. Cover attached using patented shock cord system with pull tabs on top corners and in between corners and nylon buckles at the bottom corners. | $612 |
| 3305-0398 | D&S brand 22 oz heavy duty 2 piece [#COL] vinyl hosebed rear flap. For use with aluminum hosebed cover (added seperately). Rear flap with weighted end attached with seat belt style buckles at bottom and attached to the top with twist locks. | $857 |

| Item No. | Description | |
|---|---|---|
| 3305-0399 | D&S brand heavy duty [#COL] cargo hosebed rear flap. Single cover on Aerials 2 piece cover on all other products. For use with aluminum hosebed cover (added seperately). Rear flap with nylon buckles at bottom and attached to the top with twist locks. | $857 |
| 3305-0400 | D&S brand [#COL] crosslay cover with cargo net covers (pair) for crosslay sides. Side covers to be attached to the vinyl top cover using twist locks. Bottom of the side covers attached using patented shock cord system with pull tabs. | $732 |
| 3305-0403 | D&S brand [#COL] vinyl covers (pair) for crosslay sides. To be used with aluminum crosslay cover. Side covers to be attached to the aluminum top cover using twist locks. Bottom of the side covers attached using seat belt buckles. | $646 |
| 3305-0404 | D&S brand 22 oz heavy duty [#COL] vinyl covers (pair) for speedlay sides. Cover attached using twist locks on top corners and seat belt buckles at the bottom corners. | $646 |
| 3305-0405 | D&S brand [#COL] cargo net covers (pair) for speedlay sides. Cover attached using twist locks on top corners and nylon buckles at the bottom corners. | $468 |
| 3305-0406 | Nylon black cargo net hosebed cover with attached rear flap(s). Cover to be held down with Quarter Turn fasteners ilo snaps. No Velcro to be used. | $1,128 |
| 3305-0407 | Smooth plate painted job color horizontally hinged door each side of the speedlay. Includes thumb latch and wiring for door ajar switch. | $375 |
| 3305-0409 | Vinyl [#COL] hose bed cover with side twist lock fasteners without attached rear flap(s). Requires rear cover option. | $1,075 |
| 3305-0410 | Vinyl [#COL] hose bed cover with attached rear flap(s). Cover to be held down with Quarter Turn fasteners ilo snaps. No Velcro to be used. | $868 |
| 3305-0412 | Two (2) piece aluminum hosebed cover.The rear section shall roll over the forward section on tracks and rollers. Includes appropriate handrails per NFPA guidelines. | $3,580 |
| 3310-0017 | Auxiliary jack pad 24X24 (PR) with side mounted handle. Includes mounting brackets. | $1,176 |
| 3310-0022 | Step flop down rear 12" wide rung type (PR). | $973 |
| 3310-0039 | Cut-out on compartment floor for exhaust and cover plate for hydraulic lines. | $488 |
| 3310-0084 | All tags on body to be mechanically attached with S/S screws and nuts. | $813 |
| 3310-0088 | Body module for Snozzle boom. | $7,134 |
| 3310-0098 | Step fold-down (EA). Location: [#LOC]. | $937 |
| 3310-0112 | Body module for Snozzle boom. Side panels / doors to be smooth painted plate. | $8,379 |
| 3310-0121 | Body module for 50' Mid-mount boom. 100" wide. Includes left side staircase and provision for aerial control panel. | $7,738 |
| 3310-0143 | Auxiliary jack pad 24X24 (PR) with handle welded to top surface of pad. Includes mounting brackets. | $1,176 |
| 3310-0146 | Auxiliary jack pad 24X24 (PR) with side mounted handle. Includes mounting brackets. Driver side mounted below L1 officer below RSBM. Mid mount boom only. | $1,176 |
| 3310-0205 | Additional "Safe Operating Grade Indicator" gauge shall be provided gauge is in addition to gauge at rear of body. To be located side facing at rear of body midway up on body panel above corner tailboard. Aerial body only. | $118 |
| 3310-0209 | Forward jack pad access doors painted outside surface job color and inside surface zolatone gray IPO diamond plate. 95 Mid-mount only. | $438 |
| 3310-0215 | Transverse compartment floor to be extended out to door opening in L1. | $423 |
| 3310-0252 | Body module for 50' Mid-mount boom. 100" wide. Includes left side staircase provision for aerial control panel and access door below aerial control panel. The access door and the left and right rear facing outboard panels just ahead of pump panel to be smooth plate painted job color. The following items: staircase platework access steps compartment top (below the boom module control panel) and top of module platework shall be aluminum smooth plate painted black durabak. | $8,670 |
| 3315-0005 | 2-Bottle DOT 6000 PSI Breathing Air Cascade System with air panel bottle rack and all associated air lines valves and gauges. Rack and bottles to be located in [#LOC]. | $12,734 |
| 3315-0006 | 4-Bottle DOT 6000 PSI breathing air cascade system with air panel bottle rack and all associated air lines valves and gauges. Rack and bottles to be located [#LOC]. | $17,884 |
| 3315-0009 | 4-Bottle ASME 6000 PSI Breathing Air Cascade System with air panel bottle rack and all associated air lines valves and gauges. Rack and botles to be located in [#LOC]. | $23,112 |
| 3315-0044 | Storage rack for four (4) DOT or ASME air bottles. Mounted horizontal in roof top compartments. Locate two (2) each side in roof top compartments for dealer supplied and installed DOT/ASME bottles and Cascade system. | $833 |
| 3315-0062 | 1-Bottle DOT 6000 PSI tool air system with air panel bottle and all associated air lines valves and gauges (Breathing Air Systems supplied).Bottle located in L1 rearward back wall. Air Panel located in L3 upper between reels. | $4,151 |
| 3315-0063 | Storage enclosure for breathing air system's control panel shall be provided. Panel for (1) DOT tool system. Located in L3 between reels as high as possible. | $404 |
| 3315-0064 | Storage rack for One (1) DOT air bottle. Mounted vertical top of body in compartment L1 rearward to back wall. | $602 |

| Item No. | Description | |
|---|---|---|
| 3315-0068 | Partition between roof top compartments and cascade bottle storage areas for both driver and officer side. Floor to be provided above the cascade bottle storage areas to use remaining area above. | $2,733 |
| 3315-0072 | 3-Bottle DOT 6000 PSI Breathing Air Cascade System with Sidewinder Fill Station in L3 air panel above fill station and all associated air lines valves and gauges. | $17,870 |
| 3315-0087 | Removable floor. A removable floor shall be provided in the roof top compartment to accommodate access and storage of ASME /DOT storage bottles below. The floor design shall be designed to maximize compartment storage space and access. The removable floor shall include a thumb latch access plate to provide quick access to the bottle valve without the need to remove the floor plate. Material shall be 3/16 smooth aluminum with a sanded finish. Locate: Roof top compartments over L3 and R3. | $1,359 |
| 3320-0005 | SCBA Bottle Storage. (4) Cast Product SCBA bottle storage with gasketed doors. (2) each side in rear wheel well area. | $752 |
| 3320-0006 | SCBA Bottle Storage. (3) Cast Product SCBA bottle storage with gasketed doors. (2) officer side and (1) driver side (fwd) in rear wheel well area. | $1,125 |
| 3320-0007 | SCBA Bottle Storage. (7) E-ONE SCBA bottle storage with hinged doors (doors to match wheel well material) with push button latches. (4) officer side and (3) driver side in wheel well area. | $1,203 |
| 3320-0008 | SCBA Bottle Storage. (8) E-ONE SCBA bottle storage with hinged doors (doors to match wheel well material) with push button latches. (4) officer side and (4) driver side in wheel well area. | $1,434 |
| 3320-0011 | SCBA Bottle Storage. (11) E-ONE SCBA bottle storage with hinged doors (doors to match wheel well material) with push button latches. (6) officer side and (5) driver side in wheel well area- (3) FWD and (2) RWD. | $1,617 |
| 3320-0012 | SCBA bottle storage. (7) E-ONE SCBA bottle storage with hinged stainless steel doors with push-button latches. (4) officer side and (3) driver side in wheel well area. | $1,313 |
| 3320-0014 | SCBA Bottle Storage. (6) E-ONE SCBA bottle storage with hinged doors (doors to match wheel well material) with push button latches. (3) officer side and (3) driver side in wheel well area for use with dual tank fills. | $1,174 |
| 3320-0015 | SCBA Bottle Storage. (2) Cast Product SCBA bottle storage with gasketed doors. Located driver side rear wheel well area. | $752 |
| 3320-0016 | SCBA Bottle Storage. (7) E-ONE SCBA bottle storage with hinged doors with push button latches. (4) officer side and (3) driver side in wheel well area. Rear driver side to have Cast Product SCBA bottle storage with gasketed door. | $1,203 |
| 3320-0017 | SCBA Bottle Storage. (4) Cast Product SCBA bottle storage with gasketed doors. (2) each side in rear wheel well area. Recessed fuel fill to be protected behind the rear driver side SCBA door. | $1,345 |
| 3320-0018 | SCBA Bottle Storage. (8) Fire Shopp SCBA bottle storage with hinged doors with push button latches. (4) officer side and (4) driver side in wheel well area. | $1,751 |
| 3320-0019 | SCBA Bottle Storage. (7) Fire Shopp SCBA bottle storage with doors hinged doors with push button latches. Doors shall have a brushed stainless steel finish. (4) officer side and (3) driver side in wheel well area. | $1,466 |
| 3320-0020 | SCBA Bottle Storage. (4) Fire Shopp SCBA bottle storage with hinged doors with push button latches. (2) officer side and (2) driver side in wheel well area. | $1,274 |
| 3320-0021 | SCBA/Wheel Chock Storage. (2) Cast Product SCBA bottle storage with gasketed doors on driver side in wheel well area. (2) wheel chock storage compartments with hinged doors and push button latches located on officer side in wheel well area. (2) wheel chocks to be stored per compartment. Does not include wheel chocks. Storage doors to match wheel well material. | $2,972 |
| 3320-0022 | SCBA Bottle Storage. (7) E-ONE SCBA bottle storage with hinged doors (doors to match wheel well material) with push button latches. (3) officer side and (4) driver side in wheel well area. | $1,203 |
| 3320-0024 | SCBA Bottle Storage. (7) E-ONE SCBA bottle storage with hinged stainless steel doors with push button latches. (4) officer side and (3) driver side in wheel well area. | $1,588 |
| 3320-0028 | Vision Mark tag for officer side rearward SCBA bottle storage. Tag to have red letters on white background. Tag to read "Extinguishers". | $44 |
| 3320-0030 | SCBA Bottle Storage. (8) E-ONE SCBA bottle storage with hinged stainless steel doors with push-button latches. (4) officer side and (4) driver side in wheel well area. | $963 |
| 3320-0031 | Zico metal QUIC-STORAGE bottle rack for large bottles for 6.1" to 7.4" cylinder. Locate in [#LOC]. Each unit will have straps to hold the bottle in and all top units will have a flat top. Each unit will be bolted together and be [#COL] PVC coated. | $140 |
| 3320-0032 | Zico metal QUIC-STORAGE for small bottles 5.3" to 5.8" cylinder. Locate in [#LOC]. Each unit will have straps to hold the bottle in an angle floor to hold bottle in place and all top units will have a flat top. Each unit will be bolted together and be [#COL] PVC coated. | $140 |
| 3320-0038 | SCBA bottle storage. (2) Fire Shopp style SCBA bottle storage with hinged brushed stainless steel doors with push-button latches. (1) officer side and (1) driver side in the rear wheel well area. | $638 |
| 3320-0039 | SCBA bottle storage. (3) Fire Shopp style SCBA bottle storage with hinged brushed stainless steel doors with push-button latches. (2) officer side and (1) driver side in the rear wheel well area. | $957 |
| 3320-0040 | SCBA bottle storage. (4) Fire Shopp style SCBA bottle storage with hinged brushed stainless steel doors with push-button latches. (2) officer side and (2) driver side in the rear wheel well area. | $1,274 |

| Item No. | Description | |
|---|---|---|
| 3320-0041 | SCBA Bottle Storage. (4) Cast Product SCBA bottle storage with gasketed doors with locking latches. (2) each side in rear wheel well area. | $841 |
| 3320-0043 | SCBA/Wheel Chock Storage. (5) E-ONE SCBA bottle storage with hinged doors (doors to match wheel well material) with push button latches. (4) officer side and (1) driver side in wheel well area. (1) wheel chock storage compartment with hinged door and push button latch driver side in forward wheel well area. (2) wheel chocks to be stored per compartment. Does not include wheel chocks. | $1,865 |
| 3320-0044 | SCBA Bottle Storage. (6) E-ONE SCBA bottle storage with hinged stainless steel doors with push button latches. (3) officer side and (3) driver side in wheel well area. There will (2) bottles forward of the rear axle and (1) rearward. | $855 |
| 3320-0047 | SCBA Bottle Storage. (2) Cast Product SCBA bottle storage with gasketed doors. Located officer's side rear wheel well area. | $752 |
| 3320-0050 | SCBA Bottle Storage. (7) E-ONE SCBA bottle storage with hinged polished stainless steel doors with push button latches. (4) officer side and (3) driver side in wheel well area. | $1,622 |
| 3320-0052 | Stainless steel trim on bottom edge of each SCBA/Extinguisher compartment opening. | $217 |
| 3320-0055 | SCBA Storage. (6) Fire Shopp SCBA bottle storage with hinged doors with push button latches. (4) Driver side rear wheel well area and (2) officer side (located either side of the rearward tandem wheel). | $1,909 |
| 3320-0058 | SCBA Bottle Storage. (2) Fire Shopp SCBA bottle storage with hinged doors with push button latches. Located centered in officer side wheel well area. | $638 |
| 3320-0062 | SCBA/Wheel Chock Storage. (1) E-ONE SCBA bottle storage with hinged door (door to match wheel well material) with push button latches. (1) driver side in wheel well area. (3) wheel chock storage compartment with hinged door and push button latch (1) driver side in forward wheel well area and (2) officer side in forward and rearward wheel well area. (2) wheel chocks to be stored per compartment. Does not include wheel chocks. | $2,732 |
| 3320-0065 | SCBA Bottle Storage. (6) Fire Shopp SCBA bottle storage with hinged doors with push button latches. (3) officer side and (3) driver side in wheel well area. | $1,371 |
| 3320-0066 | Zico Bottle rack for large bottles. Locate in roll-out tray in B1 (vertically mounted) 3 wide x 3 deep. Each unit will have straps to hold the bottle in and all top units will have a flat top. Each unit will be bolted together and be Black PVC coated. | $137 |
| 3320-0067 | SCBA Bottle Storage. (5) Cast Product SCBA bottle storage with gasketed doors. (3) officer side - (2) over forward axle and (1) at rear of wheel well area. (2) driver side (over forward axle) in rear wheel well area. | $939 |
| 3320-0069 | PAC Cylinder Mate. Locate in [#LOC]. Each unit will be black in color and have a strap to secure bottle. | $241 |
| 3320-0070 | Each SCBA storage area to include a ribbed rubber insert mounted to rear of storage area. | $89 |
| 3320-0071 | SCBA bottle storage for 5.25" diameter high pressure cylinders. (3) dually style SCBA bottle compartments with hinged brushed stainless steel doors and push-button latches for total storage of 6 bottles. (2) officer side and (1) driver side in the rear fender panels. | $1,174 |
| 3320-0074 | SCBA Bottle Storage. (16) E-ONE SCBA bottle storage with hinged doors (doors to match wheel well material) with push button latches and one aluminum tray for each bottle. (8) officer side and (8) driver side in wheel well area. | $2,255 |
| 3320-0076 | SCBA Bottle Storage. (2) Cast Product SCBA bottle storage with gasketed doors. Located (1) driver's side forward wheel well area (1) officer's side rear wheel well area. | $752 |
| 3320-0079 | SCBA Bottle Storage. (7) Fire Shopp SCBA bottle storage with hinged doors with push button latches (wired to door ajar). (4) officer side and (3) driver side in wheel well area. | $1,975 |
| 3320-0080 | SCBA Bottle Storage. (2) Fire Shopp SCBA bottle storage with hinged doors with push button latches. Located centered in driver side wheel well area. | $638 |
| 3320-0081 | Vision Mark tags (2) for driver side wheel well area SCBA bottle storage. Tags to have red letters on white background. (1) Tag forward inboard tube to read "WATER EXTINGUISHER". (1) Tag rearward inboard tube to read "DRY CHEM". | $108 |
| 3320-0084 | Extinguishers label to be mounted on the Officer's side rear SCBA bottle storage door IPOS. | $41 |
| 3320-0085 | SCBA bottle storage for 5.25" diameter high pressure cylinders. (4) dually style SCBA bottle compartments with hinged brushed stainless steel doors and push-button latches for total storage of 7 bottles. (2) officer side and (2) driver side in the rear wheel well area. Left side rear door covers the fuel pocket and has single bottle SCBA storage. | $1,496 |
| 3320-0086 | SCBA/Wheel Chock Storage. (3) E-ONE SCBA bottle storage with hinged doors (doors to match wheel well material) with push button latches. (2) Officer side and (1) driver side in wheel well area. (2) Wheel chock storage compartments with hinged door and push button latch. (1) Officer side (1) driver side in forward wheel well area. (2) Wheel chocks to be stored per compartment. Does not include wheel chocks. | $2,381 |
| 3320-0088 | SCBA/Wheel Chock Storage. (5) E-ONE SCBA bottle storage with hinged doors. Doors are smooth aluminum plate painted job color (doors only) with push button latches. (4) Officer side and (1) driver side in wheel well area. (1) Wheel chock storage compartment with hinged door and push button latch driver side in forward wheel well area. (2) wheel chocks to be stored per compartment. Does not include wheel chocks. | $1,865 |

| Item No. | Description | |
|---|---|---|
| 3320-0089 | SCBA Bottle Storage. (4) Fire Shopp SCBA bottle storage with hinged doors with push button latches with locking latches. (2) officer side and (2) driver side in wheel well area. | $1,483 |
| 3320-0091 | SCBA Bottle Storage. (6) E-ONE SCBA bottle storage with hinged doors (doors to match wheel well material) with push button latches. (3) officer side and (3) driver side in wheel well area. All doors to be hinged forward. | $2,140 |
| 3320-0092 | PAC Cylinder Mate. Each unit will be black in color and have a strap to hold the bottle in. Locate: Inside rear body drivers side on top of counter top in rear most corner. | $241 |
| 3320-0093 | SCBA bottle storage. (3) Fire Shopp style SCBA bottle storage with hinged brushed stainless steel doors with push-button latches. (2) officer side and (1) driver side in the forward wheel well area. | $957 |
| 3320-0095 | SCBA Bottle Storage. (7) E-ONE SCBA/Extinguisher bottle storage with hinged brushed stainless steel doors with push button latches. (4) officer side and (3) driver side in wheel well area. | $1,610 |
| 3320-0096 | Tag for SCBA/Extinguisher bottle storage. Tag to have red letters on white background. Tag to read "SCBA/FIRE EXTINGUISHER" | $44 |
| 3320-0099 | SCBA Bottle Storage. (7) Fire Shopp SCBA bottle storage with hinged doors with locking push button latches. (4) officer side and (3) driver side in wheel well area. | $1,917 |
| 3320-0101 | SCBA bottle storage. (7) E-ONE SCBA bottle storage with hinged stainless steel doors with push-button latches. (4) officer side and (3) driver side in wheel well area. Left side rear door also covers the fuel pocket. | $1,420 |
| 3320-0103 | SCBA Bottle Storage. (7) E-ONE SCBA bottle storage with hinged doors (doors to match wheel well material) with 1/4 turn latches. (4) officer side and (3) driver side in wheel well area. | $1,203 |
| 3320-0106 | SCBA Bottle/Extinguisher Storage. (8) E-ONE SCBA/Ext. bottle storage with hinged doors (doors to match wheel well material) with push button latches. (4) officer side and (4) driver side in wheel well area. Driver side to accommodate four (4) Scott 45 min 4500 PSI bottles. Officer side to accommodate two(2)Amerex model A411 20# ABC Dry Chem extinguishers and Two(2) Amerex model A240 2.5 gal pressurized water extinguishers. Officer side to load one ABC drychem and One H2O extinguisher in forward storage and same in rearward storage arraged thus to provide space for the different nozzles on extinguishers. | $1,481 |
| 3320-0107 | SCBA Bottle Storage. (4) Fire Shopp SCBA bottle storage with hinged doors with push button latches. (4) driver side only in wheel well area. Officer side SCBA not to be installed due to rear body plumbing options. Available only on commercial units with forward fuel tanks or custom applications with officer side only fuel fill. | $885 |
| 3320-0110 | SCBA Bottle Storage. (4) E-ONE SCBA bottle storage with hinged doors (doors to match wheel well material) with push button latches. (4) officer side only. | $718 |
| 3320-0111 | SCBA Bottle Storage. (4) E-ONE SCBA bottle storage with hinged doors (doors to match wheel well material) with push button latches. (4) driver side only. | $718 |
| 3320-0114 | SCBA Bottle Storage. (9) E-ONE SCBA bottle storage with hinged doors (doors to match wheel well material) with push button latches. (6) officer side and (3) driver side in wheel well area. | $2,638 |
| 3320-0115 | SCBA Bottle Storage. (6) E-ONE SCBA bottle storage with hinged doors (doors to match wheel well material) with push button latches. (4) officer side and (2) driver side in wheel well area. | $1,076 |
| 3320-0117 | SCBA Air Pack Storage. (4) E-ONE SCBA air pack storage (2 each side) with hinged door (door to match wheel well material) with push button latches. Does not include SCBA bottles or air pack. | $2,879 |
| 3320-0119 | SCBA/Wheel Chock Storage. (5) E-ONE SCBA bottle storage with hinged doors (doors to match wheel well material) with push button latches. (4) officer side and (1) driver side in wheel well area. (1) wheel chock storage compartment with hinged door and push button latch driver side in forward wheel well area. (2) wheel chocks (fits Worden #HWG non-folding chock) to be stored per compartment. Does not include wheel chocks. | $2,675 |
| 3320-0122 | SCBA Bottle Storage. (15) Fire Shopp SCBA bottle storage with hinged doors with push button latches. (8) officer side and (7) driver side in wheel well area. | $3,216 |
| 3320-0123 | SCBA Bottle Storage. (12) E-ONE SCBA bottle storage with hinged doors (doors to match wheel well material) with push button latches. Note one aluminum tray for each bottle in double storage compartments. Each side of body to have (2) Double SCBA bottle storage compartments (1) offset forward over each tandem wheel and (2) single storage compartments (1) offset rearward over each tandem wheel in wheel well area. | $1,899 |
| 3320-0124 | SCBA Bottle Storage. (10) E-ONE SCBA bottle storage with hinged doors (doors to match wheel well material) with push button latches. (6) officer side in 2 (3) bottle pods and (4) driver side in wheel well area. Driver side to have (1) 3 bottle pod forward and a single bottle and fuel fill rearward under a single door. | $2,660 |
| 3320-0125 | SCBA bottle storage. (7) E-ONE SCBA bottle storage with hinged stainless steel doors with push-button latches. (4) officer side and (3) driver side in wheel well area. Left side rear door also covers the fuel pocket. Fuel pocket shall be formed stainless steel with opening large enough to open fuel cap with gloved hand. | $1,568 |

| Item No. | Description | |
|---|---|---|
| 3320-0127 | SCBA/SPEED-DRI Storage. (5) E-ONE SCBA bottle storage/Speedi-Dri hopper with hinged doors (doors to match wheel well material) with push button latches. (2) SCBA officer side rearward (1) speedy-dri pull out storage compartment forward. (3) driver side in wheel well area (2) forward (1) rearward with recessed fuel fill. Speedy Dri pull out storage to be sized to utilize available space in forward wheel well and hold max available capacity per wheel well area as optioned. Hopper to hold approximately 35 lbs of absorbent. | $2,840 |
| 3320-0128 | SCBA Bottle Storage. (3) E-ONE SCBA bottle storage with hinged doors (doors to match wheel well material) with push button latches. (3) driver side ONLY in wheel well area. | $550 |
| 3320-0129 | SCBA Bottle Storage. (10) E-ONE SCBA bottle storage with hinged brushed stainless steel doors with push button latches. (6) officer side and (4) driver side in wheel well area. Officer side to have (1) 3 bottle storage forward and (1) 3 bottle storage rearward. Driver side to have (1) 3 bottle storage forward and a single bottle and fuel fill rearward under a single door. | $3,045 |
| 3320-0130 | SCBA/Wheel Chock Storage. (5) E-ONE SCBA bottle storage with hinged doors (doors to match wheel well material) with push button latches. (3) officer side and (2) driver side in wheel well area. (1) wheel chock storage compartment with hinged door and push button latch driver side in forward wheel well area. (2) wheel chocks to be stored per compartment. Does not include wheel chocks. Requires right side fuel fill. | $2,675 |
| 3320-0131 | SCBA Bottle Storage. (4) Fire Shopp SCBA bottle storage with hinged doors with push button latches. (2) officer side and (2) driver side in 2 bottle pods in forward wheel well areas only. | $1,274 |
| 3320-0132 | SCBA/Wheel Chock Storage. (7) E-ONE SCBA bottle storage with hinged doors (doors to match wheel well material) with push button latches. (6) officer side and (1) driver side in wheel well area. (1) wheel chock storage compartment with hinged door and push button latch driver side in forward wheel well area. (2) wheel chocks to be stored per compartment. Does not include wheel chocks. | $2,842 |
| 3320-0136 | SCBA/Wheel Chock Storage. (3) E-ONE SCBA bottle storage with hinged doors (doors to match wheel well material) with push button latches. (2) officer side and (1) driver side in wheel well area. (1) wheel chock storage compartment with hinged door and push button latch driver side in forward wheel well area. (2) wheel chocks to be stored per compartment. Does not include wheel chocks. | $1,524 |
| 3320-0137 | SCBA Bottle Storage. (2) Fire Shopp SCBA double bottle storage with hinged doors and push button latches. (2) SCBA bottles forward each side of body in wheel well area. | $876 |
| 3320-0138 | SCBA Bottle Storage. (11) SCBA bottle storage with brushed stainless steel hinged doors with push-button latches. (6) officer side and (5) driver side in wheel well area. For use with high pressure 5.25" diameter cylinders only. | $2,206 |
| 3320-0149 | SCBA/CHOCK Bottle Storage. (7) E-ONE SCBA bottle storage with hinged doors (doors to match wheel well material) with push button latches. (6) officer side in 2 (3) bottle pods and (1) driver side in wheel well area. Driver side to have (1) wheel chock storage pod forward for 2 chocks and a single bottle and fuel fill rearward under a single door. | $2,660 |
| 3320-0150 | SCBA Bottle Storage. (4) E-ONE SCBA bottle storage with hinged doors (doors to match wheel well material) with push button latches. (4) driver side in wheel well area. Driver side to have (1) 3 bottle pod forward and a single bottle and fuel fill rearward under a single door. Officer side shall not have SCBA tubes to accommodate space for rear intake piping to utilize the wheel well area for piping. | $970 |
| 3320-0152 | SCBA Pack (1) and Spare Bottle Storage (6). Storage compartment in driver side forward wheel well area to hold (1) SCBA pack and (1) SCBA spare bottle (partitioned). (1) spare bottle storage in rearward driver side wheel well area. (4) bottles in two storage compartments on officer side (one front and one rear of wheel well). Compartment doors will be hinged with push button latches and match wheel well material. Bottles are Scott 4.5. Does not include equipment. | $2,888 |
| 3320-0155 | Vision Mark tag for officer SCBA bottle storage. Tag to have red letters on white background. Tag to read "SCBA STORAGE". | $44 |
| 3320-0156 | Vision Mark tag for extinguisher storage. Tag to have red letters on white background. Tag to read "EXTINGUISHER". | $44 |
| 3320-0158 | SCBA/Wheel Chock Storage. (5) E-ONE SCBA bottle storage with stainless steel hinged doors and push button latches. (2) officer side and (3) driver side in wheel well area. Rearward door on drivers side covers the fuel fill. (1) 25" deep wheel chock/misc. storage compartment with hinged door and push button latch officer side in forward wheel well area. Fits up to (2) Worden #HWG non- folding chocks or misc. storage as desired. Does not include wheel chocks or partitions. | $2,675 |
| 3320-0159 | SCBA bottle storage. (5) E-ONE SCBA bottle storage with hinged stainless steel doors with push-button latches. (3) officer side and (2) driver side in wheel well area. | $939 |
| 3320-0160 | SCBA/Wheel Chock Storage. (1) E-ONE SCBA bottle storage with hinged door (door to match wheel well material) with push button latches. (1) rearward driver side in wheel well area. The rear door on driver side will be a single door and will not cover the fuel fill. (3) wheel chock storage compartment with hinged door and push button latch (1) driver side in forward wheel well area and (2) officer side in forward and rearward wheel well area. (2) wheel chocks to be stored per compartment. Does not include wheel chocks. | $2,732 |

| Item No. | Description | |
|---|---|---|
| 3320-0162 | SCBA/Extinguisher E-ONE Style Storage. (6) SCBA; (4) officer side and (2) driver side forward with (1) driver extinguisher driver side rearward in wheel well area. Brushed stainless steel hinged doors with push-button latches. Extinguisher compartments sized for up to a 7.25" diameter bottle. Extinguisher compartment 8.5" square minimum ID and as deep as possible to store different size extinguishers. | $1,355 |
| 3320-0165 | The Wheel Chock storage area to include a ribbed rubber insert mounted to the walls and floor of storage area. | $179 |
| 3320-0166 | SCBA/Wheel Chock Storage. (1) E-ONE SCBA triple bottle storage driver side in rear wheel well area forward. (1) E-ONE SCBA single bottle storage driver side in rear wheel well area rearward. SCBA compartments to fit up to a 6.26" diameter MSA H-45 low-profile carbon cylinders. (2) wheel chock compartments on the officer side (front and rear of wheels) up to (2) wheel chocks (2) extinguishers or misc. equipment per compartment. Does not include equipment or compartment partitions. | $2,234 |
| 3320-0169 | SCBA Bottle Storage. (5) Fire Shopp SCBA bottle storage with hinged doors with push button latches. (2) single SCBA officer side and (1) single and (1) double on driver side in wheel well area. The forward drivers side to include the double SCBA storage. | $1,393 |
| 3320-0173 | SCBA/Oxygen Bottle Storage. (4) Fire Shopp SCBA bottle storage with hinged doors with push button latches. (2) officer side and (2) driver side in wheel well area. The (2) forward tubes shall hold "D" sized oxygen bottle (1) each side the (2) rear tubes to hold SCBA bottles (1) each side. | $1,754 |
| 3320-0174 | SCBA/Wheel Chock Storage. (5) E-ONE SCBA bottle storage with hinged stainless steel doors with push button latches. (4) officer side and (1) driver side in wheel well area. (1) wheel chock storage compartment with hinged door and push button latch driver side in forward wheel well area. (2) wheel chocks to be stored per compartment. Does not include wheel chocks. | $1,976 |
| 3320-0175 | SCBA Bottle Storage. (10) E-ONE SCBA bottle storage with hinged doors (doors to match wheel well material) with push button latches. (6) officer side and (4) driver side in wheel well area. | $1,832 |
| 3320-0176 | SCBA Bottle Storage. (9) E-ONE SCBA bottle storage with hinged doors (doors to match wheel well material) with push button latches. (5) officer side in (1) 3-bottle pod forward (1) double SCBA bottle storage compartment rearward. (4) driver side in wheel well area. Driver side to have (1) 3 bottle pod forward and a single bottle and fuel fill rearward under a single door. | $2,561 |
| 3320-0177 | SCBA bottle storage with hinged doors (doors to match wheel well material) with push button latches. (4) driver side in wheel well area. Driver side to have (1) 3 bottle pod forward and a single bottle and fuel fill rearward under a single door. | $954 |
| 3320-0179 | There shall be a horizontally mounted SCBA/Fire Extinguisher storage trough(s) located in compartment [#LOC]. | $120 |
| 3320-0182 | E-ONE (1) SCBA bottle storage in rear wheel well with hinged door and push button latch. Door material to match wheel well material. Door shall cover the recessed fuel fill if located adjacent to the SCBA storage. | $257 |
| 3320-0183 | E-ONE (2) SCBA bottle storage in rear wheel well with hinged door and push button latch. Door material to match wheel well material. | $387 |
| 3320-0184 | E-ONE designed (3) SCBA bottle storage in rear wheel well with hinged door and push button latch. Door material to match wheel well material. | $602 |
| 3320-0185 | Fire Shopp brand (1) SCBA bottle storage in rear wheelwell with hinged door and push button latch. Door shall have a brushed stainless steel finish. Door shall NOT cover the recessed fuel fill if located adjacent to the SCBA storage. | $321 |
| 3320-0186 | Fire Shopp brand (2) SCBA bottle storage in rear wheelwell with hinged door and push button latch. Door shall have a brushed stainless steel finish. | $499 |
| 3320-0187 | Cast Products brand (1) SCBA bottle storage with gasketed door and push button latch. Door shall NOT cover the recessed fuel fill if located adjacent to the SCBA storage. Location: [#LOC] | $214 |
| 3320-0188 | E-ONE designed Wheel Chock storage compartment in rear wheel well with hinged door and push button latch. Door material to match wheel well material. Storage area shall hold (2) Zico Model SAC-44-E or comparable Wheel Chocks (not included). | $430 |
| 3320-0189 | E-ONE Speedy Dry storage compartment in rear wheel well hinged door and push button latch. Door material to match wheel well material. Includes a slide out bin (sanded finish) with hinged lid on top and grab handle on front. Capacity: Approximately 35 lbs of Speedy Dry absorbent material. | $1,116 |
| 3320-0192 | Compartment approx 26" W x 10" H x 25" D with drop down door. Door material to match wheelwell finish. Minimum 34" high lower body compartment openings required. Location:[#LOC] | $559 |
| 3320-0194 | E-ONE (4) SCBA bottle storage (2 bottle storage per door) located [#LOC] with hinged doors and push button latches. The doors shall be hinged at the center with one door facing forward and other door facing rearward. Door material to match wheel well material. | $771 |
| 3320-0195 | E-ONE designed (6) SCBA bottle storage (3 bottle storage per door) located [#LOC] with hinged doors and push button latches. The doors shall be hinged at the center with one door facing forward and other door facing rearward. Door material to match wheel well material. | $1,205 |
| 3320-0196 | SCBA Air Pack Storage. (1) E-ONE SCBA air pack storage with hinged door (door to match wheel well material) with push button latches. Does not include SCBA bottles or air pack. | $526 |

| Item No. | Description | |
|---|---|---|
| 3320-0197 | E-ONE (2) SCBA bottle storage (1 bottle storage per door) located [#LOC] with hinged doors and push button latches. The doors shall be hinged at the center with one door facing forward and other door facing rearward. Door material to match wheel well material. | $514 |
| 3320-0198 | Fire Shopp brand (2) SCBA bottle storage (1 bottle storage per door) located [#LOC] with hinged doors and push button latches. Doors shall have a brushed stainless steel finish and shall be hinged at the center with one door facing forward and other door facing rearward. | $696 |
| 3320-0199 | Fire Shopp brand (4) SCBA bottle storage (2 bottle storage per door) located [#LOC] with hinged doors and push button latches. Doors shall have a brushed stainless steel finish and shall be hinged at the center with one door facing forward and other door facing rearward. | $1,083 |
| 3320-0200 | Cast Products brand (2) SCBA bottle storage (1 bottle storage per door) located [#LOC] with gasketed doors and push button latches. The doors shall be hinged at the center with one door facing forward and other door facing rearward. | $774 |
| 3325-0000 | E-ONE designed PTO driven HRT system 9000-10500 PSI system with 3 tool capability. | $35,903 |
| 3325-0001 | E-ONE designed PTO driven HRT system 9000-10500 PSI system with 4 tool capability. | $43,936 |
| 3325-0003 | E-ONE designed PTO driven HRT system 9000-10500 PSI system with 2 tool capability. | $32,820 |
| 3325-0004 | XRT Hydraulic tool system with 2 tool capability. 10500 PSI system. Includes selector vlv for each reel hyd res / filter and remote cooler. Requires gen with XRT hyd pump. | $22,568 |
| 3325-0005 | E-One designed PTO driven HRT system. 5000 PSI system with 3 tool capability. | $35,903 |
| 3325-0009 | XRT Hydraulic tool system with 3 tool capability. 5000 PSI system. Includes selector vlv for each reel hyd res / filter and remote cooler. Requires gen with XRT hyd pump. | $25,365 |
| 3325-0010 | XRT Hydraulic tool system with 2 tool capability. 5000 PSI system. Includes selector vlv for each reel hyd res / filter and remote cooler. Requires gen with XRT hyd pump. | $26,428 |
| 3325-0014 | XRT Hydraulic tool system with 3 tool capability. 10500 PSI system. Includes selector vlv for each reel hyd res / filter and remote cooler. Requires gen with XRT hyd pump. | $25,365 |
| 3325-0015 | HRT 2 tool system for Holmatro thru drive on generator hydraulic pump for HRT air clutch and drive pump. Locate reservoir in upper pan adjacent to the hydraulic generator unit in rear dunnage pan. Locate the manifold inside the pump panel compartment up high with roof access for adjustments. Locate the cooler adjacent to the foam system cooler in forward dunnage pan. Plumb to reels in front bumper. | $49,484 |
| 3325-0018 | There will be a thru shaft for the generator to work off the same PTO as HRT system. | $2,253 |
| 3325-0021 | Genesis Mach III Hydraulic tool system with 2 tool capability. 10000 PSI system. Requires Harrison gen with IHT configuration. Pump location: [#LOC]. | $15,711 |
| 3325-0022 | XRT Hydraulic tool system with 1 tool capability. Includes selector vlv for each reel hyd res / filter remote cooler and hydraulic pump. Requires Smart Power Liberator generator. | $20,008 |
| 3325-0024 | XRT PTO driven HRT system 5000 PSI system with 2 tool capability. | $29,916 |
| 3325-0033 | A wireless remote will be hooked up to the HRT system. There will be up to 4 wireless controllers located near reels. System antennas and control module will be located in the dunnage area. | $4,575 |
| 3330-0001 | Slide-out platform integral driver side running board (includes hand rail as applicable). | $1,416 |
| 3330-0002 | Slide-out platform rollerless. Includes chrome grab handle centered on the front face of the platform (includes hand rail as applicable). Located [#LOC]. | $1,371 |
| 3330-0007 | Folding Step. Location [#LOC]. Each location requires a minimum of (1) handrail per NFPA. | $133 |
| 3330-0008 | Handrail up to 12". Location [#LOC]. | $117 |
| 3330-0012 | Intermediate pump panel step officer side with forward tapered corner. Includes step lighting (as applicable). Step light to be switched thru work light in cab. | $706 |
| 3330-0013 | Platform with 500lbs. slides. Locate [#LOC]. Platform sized as required per location. I includes a chrome grab pull handle and a body mounted handrail (as applicable for body mounted locations). | $923 |
| 3330-0020 | Intermediate pump panel step driver and officer side with forward tapered corner. Includes step lighting (as applicable). Step lights to be switched through work light in cab. | $1,355 |
| 3330-0023 | Slideout platform-integral officer side running board. Not available with a front suction (includes handrail as applicable). | $1,416 |
| 3330-0025 | Steps rear. Includes folding steps on officer side (staggered stepped as applicable with tailboard depth) for additional hosebed access and handrail mounted on officer side upper hosebed side (as applicable). | $381 |
| 3330-0026 | (3) Cast Product steps. Mount to driver side of B1. To include lighting under each step and driver side upper hose bed hand rail. | $352 |
| 3330-0028 | Rear driver side cast products steps with intermediate step. Includes step lighting with cast product steps. | $994 |
| 3330-0031 | Intermediate pump module step officer side with forward and rearward tapered corners. Locate just below the crosslay floor. Includes step lighting (as applicable). Step light to be switched thru work light in cab. | $463 |
| 3330-0033 | Intermediate pump module step driver side. Locate just below the crosslay floor. Includes step lighting (as applicable). Step light to be switched thru work light in cab. | $326 |
| 3330-0034 | Recessed folding step box. Driver side rear. To accommodate all steps as applicable. | $262 |

| Item No. | Description | |
|---|---|---|
| 3330-0035 | Recessed folding step box. Officer side rear. To accommodate all steps as applicable. | $262 |
| 3330-0036 | (5) Folding Steps. Located on the officer and driver side behind rear doors of cab. Handrail to be mounted on upper portion of cab for access to the crosslays | $1,360 |
| 3330-0037 | Intermediate pump panel step driver side directly below crosslays (full width). Includes (2) lower folding steps with (1) loop handrail towards rear. Includes step lighting (as applicable). Step light to be switched thru work light in cab. | $1,149 |
| 3330-0038 | Upper hosebed handrail. Locate to rear most area of hosebed with same stanchions as rear tailboard handrails. Handrail not to be in the hosebed. | $245 |
| 3330-0041 | Steps Rear NFPA. Includes diamond plate corner steps on driver and officer side for NFPA hosebed access and handrail mounted on driver and officer side upper hosebed side (as applicable) | $248 |
| 3330-0042 | Hansen white LED body hand rails upgrade package (includes pump module if applicable). | $1,374 |
| 3330-0043 | Full width handrail to be mounted just below hosebed. Handrail to run from beavertail to beavertail. Includes (2) pass-through stanchions equally spaced. This handrail is in place of standard handrail. | $365 |
| 3330-0044 | Step rear intermediate. Includes steps for NFPA hosebed access and handrail on upper hosebed side on driver side. Locate: (1) large corner step each side below intermediate step and (1) small corner step each side above intermediate step. Includes handrail mounted on officer upper hosebed side. | $750 |
| 3330-0045 | Handrail to be mounted just below hosebed to be thru bolted. Includes (2) pass-through stanchions equally spaced. This 48" handrail is in place of standard 48" handrail. | $522 |
| 3330-0047 | (2) Folding Steps. Located on the officer and driver side behind rear doors of cab. Rear cab handrails will be used for steps. | $735 |
| 3330-0048 | Handrails above compartments over 96" (Pair). To be mounted on top of body. | $365 |
| 3330-0049 | Handrails full length of hosebed cover door. Total of (4) handrails. Location (1) handrail on inboard side of each hosebed cover door. | $1,143 |
| 3330-0050 | Intermediate pump panel step driver side with forward tapered corner. Includes step lighting (as applicable). Step light to be switched thru work light in cab. | $706 |
| 3330-0052 | Slideout platform-rollerless low profile style located [#LOC]. Includes (1) hand rail (mounted as applicable). | $919 |
| 3330-0053 | Folding Step Fire Shopp. Location [#LOC]. Step include integral lights. Each location requires a minimum of (1) handrail per NFPA. | $155 |
| 3330-0055 | Steps rear Fire Shopp. Steps include integral lights. Includes folding steps on officer side (staggered stepped as applicable with tailboard depth) for additional hosebed access and handrail mounted on officer side upper hosebed side (as applicable). | $461 |
| 3330-0056 | Intermediate pump panel step officer side with forward and rearward tapered corners. Includes step lighting (as applicable). Step lights to be switched thru work light in cab. | $880 |
| 3330-0057 | Handrails to be mounted just below hosebed to be thru bolted. Handrails to have offset stanchions. These (2) appropriately sized handrails are in place of standard 48" handrail. | $522 |
| 3330-0058 | Intermediate pump panel step driver side with forward and rearward tapered corners. Includes step lighting (as applicable). Step lights to be switched thru work light in cab. | $880 |
| 3330-0061 | Handrail to be mounted on the rear of the hosebed. Handrail to use offset stanchions and be mounted downward. This is in place of standard below the hosebed handrail. | $187 |
| 3330-0062 | Step rear intermediate. Intermediate rear step to be embossed diamond plate. Includes folding steps on driver side for NFPA hosebed access and handrail mounted on driver side upper hosebed side (as applicable). | $579 |
| 3330-0063 | Steps rear. Includes diamond plate gator grip corner steps on officer side for hosebed access and handrail mounted on officer side upper hosebed side (as applicable). | $478 |
| 3330-0064 | Hosebed Access Ladder. Aluminum extruded ladder with diamond plate gator grip steps located on driver side inboard of beavertail. Requires removal of gator grip on tailboard below step for mounting. | $1,348 |
| 3330-0065 | Zico access ladder. Location: [#LOC]. Includes required step lights. | $1,761 |
| 3330-0067 | Compartment (interior) mounted manually operated fold-out step/platform with gator grip surface. Includes a mechanical hold close located in the compartment and (1) vertically mounted handrail mounted along one side of the compartment exterior. Step/platform will reduce compartment interior mounted items overall width and/or depth. Locate: [#LOC]. | $1,026 |
| 3330-0069 | Spacer bracket for platform mounting. Bracket to lower platform to approx. 12" from ground (measured to bottom of platform). Locate: [#LOC]. | $271 |
| 3330-0070 | Steps rear driver and officer (Montreal). Includes folding steps on driver and officer side with steps mounted as far rearward on the beavertail (not staggered) as applicable. Steps located (top of tailboard to top of step(down) flat surface) lowest (11") middle (24.5") and top (39.5"). | $440 |
| 3330-0071 | Step rear intermediate above B2. | $739 |
| 3330-0072 | Hansen red LED body handrails upgrade package. | $1,374 |
| 3330-0073 | Step rear intermediate embossed tread plate. Locate rear body. Includes handrail (in place of horizontal hosebed handrail). | $579 |

| Item No. | Description | |
|---|---|---|
| 3330-0074 | Access ladder. Aluminum extruded ladder with ribbed aluminum extrusion steps located on officer side of pump module offset to the rear. Rear rail to loop up and over to aid in access into/out of dunnage storage pan. | $1,657 |
| 3330-0075 | Slideout platform - SlideMaster. Location: [#LOC]. | $1,808 |
| 3330-0076 | Pool style hand rail. Includes and approx. 16" loop over the body. Location: driver side staircase; forward hand rail. | $263 |
| 3330-0077 | Intermediate pump panel step officer without taper. Includes step lighting (as applicable). Step light to be switched thru work light in cab. | $744 |
| 3330-0078 | Handrail pool stlye. Locate on rear of beavertail and rear upper body corner. In place of standard 48" beavertail and 10" upper rear body handrails. | $455 |
| 3330-0079 | Slide-out platform rollerless. Includes chrome grab handle centered on the front face of the platform (includes hand rail as applicable for body mounted locations) and required step lighting. Located [#LOC]. | $923 |
| 3330-0080 | Intermediate pump panel step driver side located rearward of the crosslays. Includes step lighting (as applicable). Step lights to be switched thru work light in cab. | $880 |
| 3330-0081 | (5) Folding Steps. Located on the driver side behind rear doors of cab w/ diamond plate paint guard. Handrail to be mounted on upper portion of cab for access to dunnage area. | $804 |
| 3330-0082 | Handrail 36". Location: driver side vertically mounted on forward corner extrusion of pump module.. | $348 |
| 3330-0083 | Handrail 18". Location: (1) on top of forward staircase module 3x3 extrusion (1) on officer side lip of staircase storage pan and (1) on top of officer side compartment top offset to front. | $519 |
| 3330-0085 | Ladder aluminum access rear of body with extruded and ribbed extrusion sides and steps. The outboard vertical extrusion is to extend full height and over the rear upper body for an additional gripping surface when accessing the upper body/hosebed area. Locate to the [#LOC] | $602 |
| 3330-0087 | Aluminum access ladder with extruded and ribbed extrusion sides and steps. Note that ladder width may vary with position of pump intake/discharge locations. Locate to the [#LOC] | $1,201 |
| 3330-0089 | Intermediate pump panel step driver and officer side without taper. Includes step lighting (as applicable). Step light to be switched thru work light in cab. Mounting feet to be reverse mounted due to vertically hinged panel. | $1,355 |
| 3330-0090 | Handrail on pump module to be full length as possible. Location: [#LOC]. | $117 |
| 3330-0093 | Ladder access aluminum extruded ladder with ribbed aluminum extrusion steps located on the rear offset to the officer side. Includes required step lights. | $1,668 |
| 3330-0096 | Steps rear package. Includes (2) diamond plate gator grip corner steps - (1) up high and (1) down low and (1) folding step between the corner steps on the driver and officer sides for hosebed access. Includes handrails mounted vertically on driver and officer side rear upper hosebed sides (as applicable). | $478 |
| 3330-0097 | Handrail 36". Location: (1) each side on driver and officer side pump module up high. | $522 |
| 3330-0098 | Handrail 12". Location outboard driver and officer side rear hosebed side. | $117 |
| 3330-0099 | Step rear intermediate. Intermediate rear step to be located just below the upper rear body compartment. | $579 |
| 3330-0100 | Step below body. Located below [#LOC]. Each location requires a minimum of (1) handrail / handhold per NFPA. | $352 |
| 3330-0101 | Intermediate pump panel step for rear pump panel. | $393 |
| 3330-0104 | Dual lighted LED folding steps rear NFPA. Includes folding steps on officer side (staggered stepped as applicable with tailboard depth) for additional hosebed access and handrail mounted on officer side upper hosebed side (as applicable). | $407 |
| 3330-0105 | Dual lighted LED folding step. Location: [#LOC]. Each location requires a minimum of (1) handrail per NFPA. | $126 |
| 3330-0106 | Step rear intermediate. Intermediate rear step to be located just below the upper ladder storage compartment. | $579 |
| 3330-0107 | All body and pump module (if applicable) hand rails to use Austin Hardware model GR-002-AL-BRT-144 knurled bright anodized aluminum tubes IPOS. | $306 |
| 3330-0118 | Steps rear. Steps include integral LED lights. Includes (6) folding steps - (3) on driver side and (3) on officer side (staggered stepped as applicable with tailboard depth) for additional hosebed access and handrail mounted on driver and officer side upper hosebed side (as applicable). | $683 |
| 3330-0123 | Rear landing platform located above the B1 compartment. Landing platform to be used for hose loading operations and will be embossed diamond plate. | $579 |
| 3330-0124 | Access ladder. Aluminum extruded ladder with ribbed aluminum extrusion steps located on the rear offset to the driver side. Includes required step lights. | $1,668 |
| 3330-0125 | Slideout platform-integral driver side running board (includes handrail as applicable). The platform step to be smooth plate with gator grip painted black durabak. | $1,702 |
| 3330-0126 | Slideout platform-rollerless. Includes chrome grab handle centered on the frt face of the platform (includes handrail as applicable). Located below officer side pump panel. The platform step to be smooth plate with gator grip painted black durabak | $1,657 |

| Item No. | Description | |
|---|---|---|
| 3330-0127 | Handrail 36". Location: (1) each side on driver and officer side pump module forward extrusion vertically mounted. | $522 |
| 3330-0129 | Auto Kwikee step. Step shall be wired into the door interlock system to enable the step to automatically extend when the door is opened and retract when the door is closed. Location: [#LOC]. | $841 |
| 3330-0133 | Access ladder. Aluminum extruded ladder with ribbed aluminum extrusion steps located on the rear offset to the driver side. Includes required step lights. | $1,668 |
| 3330-0134 | Step rear intermediate. Locate above rear traffic advisor includes handrail (in place of horizontal hosebed handrail). | $579 |
| 3330-0135 | Handrail on top pump module to be full length as possible. Location: Driver and officer side pump module. | $216 |
| 3330-0136 | The rear body vertical hand rails extended to top of body. | $126 |
| 3330-0137 | The side upper rear body handrails extended to rear of body. | $126 |
| 3330-0139 | Step below side intake / discharge panel (PR). Embossed dia plt with supports. Each location requires a minimum of (1) handrail / handhold per NFPA. eMAX only. | $1,376 |
| 3330-0152 | Handrail 36". Location offset to driver side of body headboard forward of the water tank fill tower(s). | $232 |
| 3330-0155 | Step rear intermediate. Locate above B1. | $579 |
| 3330-0156 | Step rear intermediate. Intermediate rear step to be located above the thru the tank storage tunnel. | $579 |
| 3330-0158 | Step below side intake / discharge panel (PR). Gator grip diamond plate. Each location requires a minimum of (1) handrail / handhold per NFPA. eMAX only. | $1,052 |
| 3330-0159 | Step rear intermediate. Intermediate rear step to be located above the rear Newton dump. | $579 |
| 3330-0160 | Handrail 12". Location inboard driver side rear hosebed side angled. | $117 |
| 3330-0161 | Handrail 12" with angled stanchions. Location: outboard on driver side compartment top 8" off front compartment face. | $117 |
| 3330-0165 | Handrail 24". Location [#LOC]. | $211 |
| 3330-0166 | Handrail 12". Location: Mount on rear of truck at E-One discretion. | $117 |
| 3330-0167 | Intermediate rear step to be approximately 10" deep located above the rear Newton dump valve and be of embossed aluminum treadplate. | $579 |
| 3330-0168 | Slide-out platform rollerless. Includes chrome grab handle centered on the front face of the platform (includes hand rail as applicable). Located under right side pump running board. | $1,371 |
| 3330-0170 | Slideout platform-roller-less. Includes chrome grab handle and retaining pin centered on the front face of the platform (includes handrail as applicable for body mounted locations) and required step lighting. Located: [#LOC]. | $923 |
| 3330-0171 | Steps rear NFPA compliant. Includes diamond plate corner steps on driver and officer side rear of body for NFPA hose bed access. Includes hand rails mounted vertically on driver and officer side rear beavertails and horizontal below the hose bed (as applicable). | $418 |
| 3330-0173 | Step bolt on 19.9" X 8" gator grip stepping surface shall be mounted [#LOC]. | $319 |
| 3330-0174 | Slideout platform-rollerless. Includes chrome grab handle centered on the front face of the platform (includes hand rail as applicable). The platform step to be smooth plate with gator grip painted black durabak. Located [#LOC]. | $1,643 |
| 3330-0175 | Intermediate pump panel step driver side above operator's panel. Includes (2) loop handrails (1) forward (1) rearward. Includes step lighting (as applicable). Step light to be switched thru work light in cab. | $1,258 |
| 3330-0177 | Intermediate pump panel step constructed of 3/16" (.187") aluminum smooth plate with black Scorpion coating (IPOS diamond plate) for rear pump panel. | $539 |
| 3330-0179 | Steps below side intake / discharge panel (PR). Bustin Tread and diamond plate. Each location requires a minimum of (1) hand rail / hand hold per NFPA. SM SS eMAX only. | $1,052 |
| 3330-0182 | Step rear intermediate embossed treadplate. Locate above B1 includes handrail (in place of horizontal hosebed handrail). | $579 |
| 3330-0183 | Step rear intermediate. Locate above B1 includes handrail (in place of horizontal hosebed handrail). Step construction shall be aluminum smooth plate IPO diamond plate painted Black Scorpion (rough finish). | $815 |
| 3330-0184 | Step rear intermediate. Locate above B2 includes handrail (in place of horizontal hosebed handrail). | $579 |
| 3330-0185 | Step below side intake / discharge panel (PR). Gator grip plate constructed of 1/8" (.125") aluminum smooth plate with black Scorpion coating (rough finish) IPOS diamond plate. Each location requires a minimum of (1) handrail / handhold per NFPA. eMAX only. | $1,336 |
| 3330-0186 | Rear handrails. Locate on rear of the body 3x3 and extend from just above the tailboard to the top of the body on the driver and officer sides. In place of standard 48" handrail. | $455 |
| 3330-0187 | Step rear intermediate. Locate above B1. The step shall be 10" in depth. | $632 |
| 3330-0188 | Hansen green LED body hand rails upgrade package (includes pump module if applicable). | $1,374 |
| 3330-0189 | Step rear intermediate embossed treadplate. Locate below fold-a-tank. | $579 |

| Item No. | Description | |
|---|---|---|
| 3330-0190 | Step below side intake / discharge panel (PR). Smooth plate aluminum with gator grip painted black durabak. Each location requires a minimum of (1) handrail / handhold per NFPA. eMAX only. | $1,263 |
| 3330-0191 | Access ladder. Aluminum extruded ladder with ribbed aluminum extrusion steps located on driver side of pump module offset to the rear. Rear rail to loop up and over to aid in access into/out of dunnage storage pan. | $1,657 |
| 3330-0193 | Step rear intermediate. Locate below hosebed includes handrail (in place of horizontal hosebed handrail). | $579 |
| 3330-0194 | Intermediate Step. An 8" deep x 46" wide non-skid aluminum treadplate step with mitered corners shall be installed above the rear panel compartment door opening for ease of access to the upper body area. The step shall include a Bustin tread insert for increased traction and drainage. | $604 |
| 3330-0195 | An 8" deep non-skid aluminum treadplate step with mitered corners shall be installed above the rear panel compartment door opening for ease of access to the upper body area. The step shall include a Bustin tread insert for increased traction and drainage. The width of the step shall be 38" when one rear discharge is selected or 31" when two rear discharges are selected. | $596 |
| 3330-0196 | Additional handrails horizontal above pump panel below upper pump module (1) driver (1) officer side. Mount handrails offset to the rear (just forward of folding steps). | $227 |
| 3330-0197 | Steps NFPA compliant. Fabricated diamond plate steps on driver and officer side of crosswalk. | $418 |
| 3330-0198 | Intermediate rear step to be approximately 10" deep located above the rear compartment and be of embossed aluminum treadplate. | $579 |
| 3330-0199 | Steps below body. Located each side below crosswalk. | $476 |
| 3330-0200 | Step flop down rear 16" wide rung type (PR) IPO pocket step at rear side staircases. | $973 |
| 3330-0201 | Step rear intermediate embossed tread plate. Locate rear body. Includes hand hold cut-outs on top of the step in place of the hand rail. | $579 |
| 3330-0202 | Intermediate rear step to be approximately 8" deep located at the rear panel and be constructed of embossed aluminum treadplate. | $502 |
| 3330-0206 | Step rear 10" intermediate embossed treadplate. Locate below hosebed includes three (3) hand hold cut-outs on top of the step in place of the hand rail. | $579 |
| 3330-0207 | Hansen blue LED body hand rails upgrade package (includes pump module if applicable). | $1,374 |
| 3330-0208 | Rescue body access ladder. Zico model RL18 for increased visibility of rear outboard body mounted DOT/NFPA lighting.. Includes required step lights and additional hand rail(s) if applicable. Location: [#LOC]. | $2,128 |
| 3330-0209 | Slide-out platform rollerless. Includes chrome grab handle centered on the front face of the platform (includes hand rail as applicable). Located below tailboard centered and the step area the same width as the access ladder. | $1,371 |
| 3330-0210 | Handrail 12". Install 12" handrails on the upper flat section above the speedlays for easier access to the top mount pump panel walkway. | $117 |
| 3330-0211 | Intermediate pump panel step officers side located rearward of the crosslays. Step to be constructed of embossed aluminum treadplate. Includes step lighting (as applicable). Step lights to be switched thru work light switch in cab. | $883 |
| 3330-0212 | (2) Dual lighted LED folding steps. Location: Side by side centered on front pump module access door above walkway to aid pump operator in reaching and operating deck gun from crosswalk area. Includes reinforced 3/16" diamond plate pump access door. Each location requires a minimum of (1) handrail per NFPA. | $355 |
| 3330-0214 | Slidemaster pull out platform shall be mounted in B1 compartment floor. | $1,173 |
| 3330-0215 | Step flop down rear 12" wide rung type (PR). Painted Durabak black. | $1,231 |
| 3330-0216 | Access ladder. Sure Step V2. Finish: Aluminum. Includes required step lights and additional hand rail(s) if applicable. Location: [#LOC]. | $2,467 |
| 3330-0218 | Step rear 10" deep intermediate. Step to be embossed treadplate and located between engine access door and lower air intake. | $579 |
| 3330-0219 | Step rear intermediate embossed treadplate. Locate below hose bed to extend rearward from body 12 in. and shall include three (3) hand hold cut-outs on top of the step in place of the hand rail. | $634 |
| 3330-0221 | Sides of intermediate rear step to be cut out. | $44 |
| 3330-0222 | Rear landing platform (full width) located below hosebed area. Landing platform to be used for hosebed operations and will be embossed diamond plate. | $816 |
| 3330-0223 | Intermediate rear step to be approximately 10" deep located above the rear compartment and be of embossed aluminum treadplate. Includes side mounted gussets to provide a 500lb weight rating. | $646 |
| 3330-0224 | Handrails 12". Install (2) 12" Hansen white LED lighted handrails on the upper rear top of body forward of the rear unistruts. | $392 |
| 3330-0225 | Folding Step. Step to be located 18" above surface of tailboard and directly below drivers side rear vertical handrail. | $253 |
| 3330-0226 | Step rear intermediate smooth plate painted black Durabak. Locate above B1 includes handrail (in place of horizontal hosebed handrail). | $724 |
| 3330-0228 | Step rear intermediate embossed treadplate. Locate above B1 includes three (3) hand hold cut-outs on top of the step in place of the hand rail. | $579 |

| Item No. | Description | |
|---|---|---|
| 3330-0231 | Slide-out platform rollerless to be painted Durabak black. Includes chrome grab handle centered on the front face of the platform (includes hand rail as applicable). Located [#LOC].. | $3,425 |
| 3330-0232 | Step below side intake / discharge panel (PR) to be painted Durabak black.. Smmoth plate. Each location requires a minimum of (1) handrail / handhold per NFPA. eMAX only. | $1,316 |
| 3330-0235 | Modular diamond plate intermediate steps shall be provided - one step on the driver and officer side of the rear dump valve and one above it. Includes handrails as applicable. | $678 |
| 3330-0236 | Cut-outs in top rear intermediatestep. Includes three (3) hand hold cut-outs on top of the step in place of the hand rail. | $44 |
| 3330-0237 | Handrail 60". Location: (1) each side on driver and officer side pump module forward extrusion vertically mounted. | $522 |
| 3330-0240 | Step staircase access treadplate with Gator Grip. Pair.Locate: Rear of body 1 step each side of staircase for access to staircase from tailboard. | $579 |
| 3330-0245 | LINE-X Package for step below body (each). | $134 |
| 3330-0246 | Slidemaster pull out platform shall be mounted in B1 compartment at compartment break so that the stepping surface when deployed is at same height as the enhanced extended compartment side steps at rear of apparatus. To include center compartment structure as needed to mount and secure slide master slide unit in elevated position. | $1,413 |
| 3330-0247 | Handrails full length of hosebed cover door. Total of (2) handrails. Location (1) handrail on inboard side of each hosebed cover door. | $572 |
| 3330-0251 | Intermediate pump panel step drivers side located rearward of the crosslays. Step to be constructed of embossed aluminum treadplate. Includes step lighting (as applicable). Step lights to be switched thru work light switch in cab. Includes (1) handrail at the top of the pump module and (1) at the top of the left side body. | $885 |
| 3330-0252 | Intermediate pump panel step officers side located rearward of the crosslays. Step to be constructed of embossed aluminum treadplate. Includes step lighting (as applicable). Step lights to be switched thru work light switch in cab. Includes (1) handrail at the top of the pump module and (1) at the top of the right side body. | $885 |
| 3330-0254 | Step rear intermediate embossed treadplate. Locate below hosebed includes two (2) hand hold cut-outs on top of the step in place of the hand rail. The cut-outs to be on the left side and center only. | $579 |
| 3330-0255 | Slide-out platform rollerless. Includes chrome grab handle centered on the front face of the platform (includes hand rail as applicable for body mounted locations) and required step lighting. Located R1 as wide as space allows due to exhaust pipe. | $923 |
| 3330-0256 | Hansen amber LED body hand rails upgrade package (includes pump module if applicable). | $1,374 |
| 3330-0258 | Intermediate pump panel step on driver and officer side located above the pump panel but below level of cross lays. Includes step lighting (as applicable). Step lights to be switched thru work light in cab. Steps to be 8in toe depth or greater step surface and shall allow for panel lighting to be mounted under step if applicable or optioned separately. | $880 |
| 3330-0259 | Rear landing platform located above the storage tunnel through tank. Landing platform to be used for hose loading operations and will be embossed diamond plate. | $579 |
| 3330-0260 | Intermediate pump panel step drivers side located rearward of the crosslays. Step to be constructed of embossed aluminum treadplate. Includes step lighting (as applicable). Step lights to be switched thru work light switch in cab. | $883 |
| 3330-0261 | Dual lighted LED folding steps Signature Partners Inc. Each location requires a minimum of (1) handrail per NFPA. Location: Drivers and officers side front compartment faces. | $206 |
| 3330-0262 | Dual lighted LED folding steps Signature Partners Inc rear NFPA. Includes folding steps on driver and officers sides (staggered stepped as applicable with tailboard depth) for NFPA hosebed access and handrails mounted on drivers and officers sides upper hosebed sides (as applicable). | $822 |
| 3330-0265 | Rear landing platform located below the Ladder Storage Tunnel. Landing platform to be used to assist in hose loading operations and will be embossed diamond plate. | $579 |
| 3330-0266 | Dual lighted rear fixed steps (1) driver side and (1) officer side and handrails mounted each side outboard of the storage compartment doors for additional hose bed access. | $535 |
| 3330-0268 | Step rear intermediate embossed treadplate. Locate on extrusion above rear dump and tank fills includes three (3) hand hold cut-outs on top of the step in place of the hand rail. | $579 |
| 3330-0269 | Dual lighted LED Signature4 folding step. Location: [#LOC]. Each location requires a minimum of (1) handrail per NFPA. | $184 |
| 3330-0270 | Intermediate rear step to be approximately 8" deep x 36" wide located below the hose bed and be of embossed aluminum treadplate. Step to have hand hole cut outs and integral handrail assembly welded into step structure. Formed stainless steel angle braces provided at each end of step for additional support. | $631 |
| 3330-0272 | Additional handrails on pump panel. | $227 |
| 3330-0274 | Ladder Hose Bed access aluminum extrusion and gator grip steps stair case style located on the rear offset to the officer side against inside of rear beavertail. Includes required step lights. | $3,035 |
| 3330-0277 | Innovative Controls dual lighted LED folding steps rear NFPA. Includes folding steps on driver side (staggered stepped as applicable with tailboard depth) for NFPA hosebed access and handrail mounted on driver side upper hosebed side (as applicable). | $60 |

| Item No. | Description | |
|---|---|---|
| 3330-0278 | Innovative Controls dual lighted LED folding steps rear NFPA. Includes folding steps on officer side (staggered stepped as applicable with tailboard depth) for additional hosebed access and handrail mounted on officer side upper hosebed side (as applicable). | $468 |
| 3330-0279 | Innovative Controls dual lighted LED folding step. Location: [#LOC]. Each location requires a minimum of (1) handrail per NFPA. | $186 |
| 3330-0284 | Hansen red LED body hand rails upgrade package (includes pump module if applicable). | $1,374 |
| 3330-0285 | Handrail 18". Location: Officer side above pump panel and below E-One logo. | $176 |
| 3330-0286 | Access ladder. Aluminum access ladder driver side pump module with diamond plate gator grip steps and handrails. Rear rail to loop up and over to aid in access into/out of dunnage storage pan. | $2,469 |
| 3330-0293 | Step rear intermediate approximately 8" deep and full width of hosebed. Locate above B1 includes handrail (in place of horizontal hosebed handrail). | $816 |
| 3330-0294 | Diamond plate gator grip overlay to be located on driver side forward compartment top. | $178 |
| 3330-0295 | Diamond plate gator grip overlay to be located on officer side forward compartment top. | $178 |
| 3330-0302 | Slide-out intermediate step. Includes hand hold notch centered on the front face of the step and required step lighting. Located on the rear body. | $1,153 |
| 3340-0003 | Cast Products recessed fuel fill with door. | $135 |
| 3340-0004 | Hosebed above the booster tank. Includes forward hosebed and tower(s) cover plate work (as applicable). Hosebed adjustable divider extrusion rearward of the furthest tower is to run full width of the hosebed (as is practical with other hosebed mounted equipment). | $1,686 |
| 3340-0005 | Step rear intermediate. Includes folding steps on driver side for NFPA hosebed access and handrail mounted on driver side upper hosebed side (as applicable). | $579 |
| 3340-0015 | Diamond plate single axle wheel well. Includes bolt-on composite wheel well liners and aluminum trim fenderettes. | $1,162 |
| 3340-0021 | Compartment Heaters installed in [#LOC]. | $494 |
| 3340-0026 | Diamond plate overlay front body. For Stainless Steel product only. To include the entire front body panels. Do not wrap to the door opening. | $427 |
| 3340-0027 | Diamond plate corner guards for the driver and officer front compartment face. Guards to wrap around the corner and be full height of side assembly or to a max of 96". | $217 |
| 3340-0028 | Stainless Steel corner guards for the driver and officer front compartment face. Guards to wrap around the corner and be full height of side assembly. | $276 |
| 3340-0034 | The hinged door(s) of [#LOC] to have door louvers for additional ventalation. | $168 |
| 3340-0035 | Divider Long. To run full length of hose bed (front to rear). | $513 |
| 3340-0036 | Body compartment interiors to have a swirled finish. Includes pan or hinged door as applicable. | $2,184 |
| 3340-0041 | Removable number plate with mounting brackets. Locate [#LOC]. Plate to be painted job color. Lettering and/or graphics not included. | $282 |
| 3340-0045 | (2) driver side roof top compartments. Includes hinged raised compartment lids with turn latches and grab handle(s). Each lid to have (1) bracket mounted LED light and to be wired to door ajar indicator in cab. | $2,626 |
| 3340-0049 | Hosebed storage pan. Locate in forward area of hosebed. | $770 |
| 3340-0051 | Reinforce flooring of compartment [#LOC] for storage of heavy equipment. | $337 |
| 3340-0052 | Stainless steel trim on bottom edge of compartment opening of [#LOC]. | $128 |
| 3340-0055 | Cast Products recessed fuel fills with doors for dual fuel fill application. | $459 |
| 3340-0059 | Recessed fuel fills for dual fuel fill application (1) each side in rear wheel wells. | $261 |
| 3340-0060 | Diamond plate corner guards for the driver and officer rear compartment face. Guards to wrap around the corner and be full height of side assembly or to a max of 96". | $246 |
| 3340-0061 | The walls of compartment [#LOC] to have additional louvers for additional ventilation. | $86 |
| 3340-0062 | Divider medium. To run full length of hose bed (front to rear) behind single fill tower. | $460 |
| 3340-0063 | Divider short. To run full length of hose bed (front to rear) behind dual fill towers or single set back fill tower. | $386 |
| 3340-0067 | Turtle Tile Brand [#COL] Floor Matting covering all applicable Compartment Floors Shelves and Rollout Trays. | $1,110 |
| 3340-0068 | Mud flaps rear black with Saulsbury logo. | $171 |
| 3340-0074 | Body mainframe and hosebed side assemblies for a 85" high body. | $1,217 |
| 3340-0075 | Body mainframe and hosebed side assemblies for a 90" high body. | $2,430 |
| 3340-0076 | (2) officer side roof top compartments. Includes hinged raised compartment lids with turn latches and grab handle(s). Each lid to have (1) bracket mounted LED light and to be wired to door ajar indicator in cab. | $2,626 |
| 3340-0077 | Body compartment Interiors to have Zolatone gray finish. To include pan of hinged doors and tool compartments (as applicable). Does not include floors if they are dia plt. | $5,463 |
| 3340-0078 | Body compartment Interiors and compartment mounted components (shelves trays toolboardsetc.) to have Zolatone gray finish. To include pan of hinged doors and tool compartments (as applicable). Does not include floors if they are dia plt. | $11,589 |

| Item No. | Description | |
|---|---|---|
| 3340-0080 | Bolt-on diamond plate 18" tailboard (full width of body). Includes (2) squared off beavertails (no stanchions) with removable outer panels and handrails- (2) vertical on trailing edge of body and horizontal mounted handrail(s) below hosebed. | $971 |
| 3340-0082 | Bolt-on diamond plate tailboard (full width of hosebed). Includes handrails- (2) vertical mounted on trailing edge of body and horizontal mounted handrail(s) below hosebed. | $732 |
| 3340-0083 | Bolt-on diamond plate tailboard (full width of rear compartment). Includes the enhanced extended side compartment frame work with diamond plate compartment tops (1) officer side lower area folding step. Driver side includes (1) upper hosebed mounted handrail (as applicable) and handrails- (2) vertical on trailing edge of body and horizontal mounted handrail(s) below hosebed. | $867 |
| 3340-0088 | Smooth plate single axle wheel well painted job color. Includes bolt-on composite wheel well liners. | $1,683 |
| 3340-0089 | Turtle Tile Brand [#COL] Floor Matting covering all applicable Compartment Floors Shelves and Rollout Trays. | $1,789 |
| 3340-0090 | Turtle Tile Brand [#COL] Floor Matting covering all applicable Compartment Floors Shelves and Rollout Trays. | $2,436 |
| 3340-0093 | Mud flaps rear black with E-ONE logo. | $170 |
| 3340-0094 | Body mainframe and hosebed side assemblies for a 95" high body. | $3,645 |
| 3340-0095 | (2) officer side roof top compartments with extra width to inboard side. Includes hinged raised compartment lids with turn latches grab handle(s) and gas shock hold open and drain line(s) ran to below body. Each lid to have (1) bracket mounted LED light and to be wired to door ajar indicator in cab. | $5,247 |
| 3340-0096 | (2) driver side roof top compartments with extra width to inboard side. Includes hinged raised compartment lids with turn latches grab handle(s) and gas shock hold open and drain line(s) ran to below body. Each lid to have (1) bracket mounted LED light and to be wired to door ajar indicator in cab. | $5,247 |
| 3340-0097 | Brushed Stainless Steel single axle wheel wells. Includes bolt-on composite wheel well liners and fenderettes. | $1,278 |
| 3340-0098 | Stainless Steel single axle wheel wells. Includes job color paint bolt-on composite wheel well liners and fenderettes. | $1,589 |
| 3340-0099 | Diamond plate overlay rear body. For Stainless Steel product only. To include the entire rear body panels. Do not wrap to the door opening. | $351 |
| 3340-0102 | Angled (Boston style) style tailboard corners. | $463 |
| 3340-0107 | Diamond plate tandem axle wheel well. Includes bolt-on composite wheel well liners and fenderettes. | $2,317 |
| 3340-0109 | Power vent system located in [#LOC]. Includes timer and is run from shorepower inlet. | $201 |
| 3340-0111 | Horizontal ladder bracket. Location and type of ladder: [#LOC]. | $269 |
| 3340-0114 | Hosebed above the booster tank and side body compartments. Includes forward hosebed and tower(s) cover plate work (as applicable) and extended width side to side (over side compartments) for increased hosebed capacity. | $3,228 |
| 3340-0115 | Bolt-on diamond plate 16" tailboard (full width of body). Includes (2) squared off beavertails (no stanchions) with removable outer panels and handrails- (2) vertical on trailing edge of body and horizontal mounted handrail(s) below hosebed. | $909 |
| 3340-0116 | Bolt-on diamond plate 14" tailboard (full width of body). Includes (2) squared off beavertails (no stanchions) with removable outer panels and handrails- (2) vertical on trailing edge of body and horizontal mounted handrail(s) below hosebed. | $845 |
| 3340-0117 | Bolt-on diamond plate 12" tailboard (full width of body). Includes (2) squared off beavertails (no stanchions) with removable outer panels and handrails- (2) vertical on trailing edge of body and horizontal (as applicable) mounted handrail(s) below hosebed. | $782 |
| 3340-0118 | Bolt-on diamond plate 10" tailboard (full width of body). Includes (2) squared off beavertails (no stanchions) with removable outer panels and handrails- (2) vertical on trailing edge of body and horizontal mounted handrail(s) below hosebed. | $718 |
| 3340-0119 | Speedy dry hopper. Locate [#LOC]. Includes discharge chute in compartment directly below roof top compartment with close off valve and extension hose for ground level dispensing. Capacity of speedy dry hopper is 200 lbs. | $1,632 |
| 3340-0121 | Full length driver side tunnel. Reduces driver side upper compartment depths to 12" deep IPO 26". Tunnel includes access door at rear. | $1,471 |
| 3340-0122 | Half length driver side tunnel. Reduces driver side upper compartment depths of L2 and L3 to 12" deep IPO 26". | $918 |
| 3340-0124 | Upgrade runningboards to 3/16" diamond plate. | $97 |
| 3340-0125 | Directonal light bar to be recess mounted. Located on rear area of body. | $415 |
| 3340-0127 | Body mainframe and hosebed side assemblies for a 77" high body. | $732 |
| 3340-0128 | Bolt-in partition walls. Locate in lower rear compartment transverse area. Partitions to separate the side rear compartments from the rear compartment. | $244 |

| Item No. | Description | |
|---|---|---|
| 3340-0131 | Diamond plate hose storage box. Locate on driver side compartment top. Hosebed side to be the inside edge of box for maximum storage. Use .090 overlay on hosebed side to protect paint and rear 3x3 extrusion. Box to include a 3" radius rear corner removable slat flooring and a cargo net top and rear. | $767 |
| 3340-0132 | Diamond plate single axle wheel well. Includes fenderettes and bolt-on aluminum wheel well liners painted job color. | $2,317 |
| 3340-0133 | Officer side beavertail to have recess box (9"w x 14"H x depth of beavertail). Box to be mounted low flush with top of tailboard. | $427 |
| 3340-0135 | Body mainframe and hosebed side assemblies for a 73" high body. | $1,703 |
| 3340-0136 | Bolt-on diamond plate 20" tailboard (full width of body). Includes (2) squared off beavertails (no stanchions) with removable outer panels and handrails- (2) vertically on beavertails and (1) horizontally below hosebed. | $1,036 |
| 3340-0137 | Body mainframe and hosebed side assemblies for a 92" high body. | $2,916 |
| 3340-0139 | Bolt-on diamond plate 18" tailboard (full width of body). Includes (2) slanted beavertails (no stanchions) with removable outer panels and handrails- (2) vertically on trailing edge of body and horizontally mounted handrail(s) below hosebed. | $1,213 |
| 3340-0141 | Label package for Memphis units only to include labeling of removable panels to indicate what is behind. | $103 |
| 3340-0142 | Crosslay roller 18". Mount driver side front compartment face just below compartment top. | $156 |
| 3340-0143 | Interior ladder tunnel door. Locate in B1 inline with ladder tunnel thru tank. Hinge to officer side with D-Ring latch and driver side to be notched for cord reel. | $442 |
| 3340-0144 | Stainless Steel floor overlay. B1/R1 full width. | $287 |
| 3340-0145 | Rub rail for the body and pump area module(s). | $780 |
| 3340-0146 | Stainless steel rubrail for the body and pump area module(s). | $1,556 |
| 3340-0147 | Louver Guards. All lower body compartment louvers to have protective guard provided on exterior of compartments. Guards to prevent road spray from entering compartments. | $556 |
| 3340-0148 | Body and Cab logos (exterior large and small logos) to be mounted at final inspection. | $780 |
| 3340-0149 | Transverse Module (full width). Locate forward of pump area. Includes a single compartment opening per side (with a shallow lower area and a transverse upper area with diamond plate flooring) and upper area for single stacked double crosslay with backboard storage. | $4,112 |
| 3340-0151 | Dri-Dek Brand [#COL] floor matting covering all applicable body compartment floors shelves and rollout trays. | $1,714 |
| 3340-0152 | Dri-Dek brand [#COL] floor matting covering all applicable compartment floors shelves and rollout trays. | $2,362 |
| 3340-0153 | Hosebed storage pan diamond plate lids (2) lids. Officer side lid to run just under the ladder rack in the stored position. The driver side to be as large as possible with remaining space. Each hinged to rear of pan. Includes (1) gas shock hold open and push-button latches. Included in the pan are vertical "L" shaped partion walls located next to inboard side of fill towers. Seal partitions to keep water from entering from the outboard psoition. | $727 |
| 3340-0154 | Mud flaps rear black with no logo. | $170 |
| 3340-0158 | Underbody splash guard behind rear axle mounted to body. | $548 |
| 3340-0165 | Bracket pac trac jumbolok p/n 1070 PT. To hold (2) pike poles (1) 6ft and (1) 10ft. To be located on officer side compartment top. | $281 |
| 3340-0166 | Partition bolt-in vertical partition wall. Locate in [#LOC]. | $227 |
| 3340-0173 | Backboard storage box. Located in the officer side of the hosebed (full length). Includes vertically hinged door (wired to door ajar) w/push-button latch and composite flooring. Box to hold: (2) backboards. The box to have an open area (top access) to the rear of the backboards in remaining hosebed area. | $523 |
| 3340-0176 | Swirl plate single axle wheel well with clear coat finish. Includes bolt-on composite wheel well liners. | $1,785 |
| 3340-0180 | Brushed stainless steel overlay front body. For Stainless Steel product only. To include the entire front body panels. Do not wrap to the door opening. | $637 |
| 3340-0181 | Each lid to have (1) additional bracket mounted light. This is in addition to light that comes standard for total of (2) lights per compartment. | $158 |
| 3340-0182 | Brushed stainless steel single axle wheel well. Includes bolt-on stainless steel wheel well liners and fenderettes. | $2,549 |
| 3340-0184 | Diamond plate box for directional lightbar and (2) GH scene lights. Box to be mounted on 3" x 3" aluminum angle at rear of hosebed storage pan. Lights to be surface mounted to box. | $585 |
| 3340-0185 | Hosebed divider(s) to be notched for hosebed preconnects. Notch to be large enough for divider(s) to be adjustable over preconnects. | $156 |
| 3340-0186 | Recessed storage compartment located between driver side upper and lower compartments. Compartment to hold dealer supplied and installed back up tether and plug. | $423 |
| 3340-0187 | Sign "Stay Back 150 Metres" with black reflective lettering. Locate below rear of body. | $139 |
| 3340-0190 | Diamond Plate Hosebed Storage Pan Cover. Includes (1) D-ring latch and gas shock(s). Hinge to the rear of the hosebed storage pan. Cover to open to 90 degrees. | $1,075 |

| Item No. | Description | |
|---|---|---|
| 3340-0191 | Divider Support to run full width of hosebed (side to side) at the front of the hosebed and towards the rear of the hosebed at top of the divider(s). Attach to each hosebed divider to provide additional support. | $350 |
| 3340-0192 | Storage box ceiling mounted in transverse of L3/R3. | $463 |
| 3340-0193 | Pumper Body Pump Module and Cab Tags in French to replace standard English E-One supplied Tags. Includes pump panel and multiplex display if applicable. | $1,576 |
| 3340-0194 | Bolt-on diamond plate tailboard (full width of rear compartment) for use with low hosebed. Includes driver side (1) upper hosebed mounted handrail (as applicable) handrail(s) mounted horizontally below hosebed and (2) handrails mounted vertically on trailing edge of body. | $867 |
| 3340-0197 | The following compartments to be full height and full depth L1 L2 R1. | $921 |
| 3340-0198 | Rear diamond plate vertical hinged door on driver side roof top compartments. Includes thumb latch and wiring for door ajar switch. | $188 |
| 3340-0199 | Hosebed storage box for 17' Little Giant Ladder to be vertically stored. Includes vertically hinged door (wired to door ajar) with push-button latch. Located in driver side of hosebed. | $915 |
| 3340-0200 | Removable slat flooring. Location: [#LOC] | $279 |
| 3340-0207 | Piping cover to be located in compartment [#LOC]. Includes compartment wall cut-outs for piping. | $471 |
| 3340-0210 | Brushed stainless steel overlay rear body. For Stainless Steel product only. To include the entire rear body panels. Do not wrap to the door opening. | $637 |
| 3340-0211 | Painted smooth plate overlay rear body. For Stainless Steel product only. To include the entire rear body panels. Do not wrap to the door opening. | $1,964 |
| 3340-0212 | Diamond plate access door in dunnage pan for access to plumbing in pump module. Includes push button latches. | $344 |
| 3340-0213 | L shaped partition located in hosebed to protect the fill towers. | $360 |
| 3340-0214 | Smooth plate outboard beavertail panels (PR). Painted job color. | $548 |
| 3340-0215 | Divider Long. To run full length of hosebed (front to rear). Divider height to half of hosbed depth (top to bottom). For use with low hosebed configurations only. | $513 |
| 3340-0216 | Body mainframe and upper body/hosebed side assemblies for a 90" high body. | $673 |
| 3340-0217 | The upper outboard panels of the speedlay module the wheel well and the rear end upper/lower rearward facing panels to smooth plate overlays. These area are to be seamless and painted job color. | $4,391 |
| 3340-0218 | Sign "Stay Back 500FT". White plate with red reflective lettering. Locate low on rear of body / body doors. | $139 |
| 3340-0219 | Body and hosebed storage pan pump access panel package. Includes removable access panels in upper forward area of L1/R1 and a large removable access panel in floor of the hosebed storage pan. | $608 |
| 3340-0220 | Body compartment Interiors to have Zolatone black finish. To include pan of hinged doors (as applicable). Does not include floors if they are dia plt. | $5,463 |
| 3340-0221 | Body compartment Interiors and compartment mounted components (shelves trays toolboardsetc.) to have Zolatone black finish. To include pan of hinged doors (as applicable). Does not include floors if they are dia plt. | $11,589 |
| 3340-0223 | Stainless Steel corner guards for the driver and officer rear compartment face. Guards to wrap around the corner and be the height of the top of the tail lights. | $262 |
| 3340-0225 | Stair case module (full width of body). Includes large compartment area with lower storage area and upper area dunnage pan. Stair case located to [#LOC]. | $8,972 |
| 3340-0226 | Special hosebed configuration. (1) long divider driver side on top of discharge box 4.25" from hosebed side. (1) short divider officer side on top of discharge box 5.625" from hosebed side. (1) short divider officer side up against discharge box 8.875" from hosebed side. (1) short divider officer side 14.625" from hosebed side. (2) short dividers officer side 14" high (1) divider 21.375" in from hosebed side and (1) divider 28.125" in from hosebed side. Includes bolt-in vertical partition from right side hosebed wall to center divider 84" from rear of hosebed. Remaining area forward of partition to be used for storage area. Includes hinged shelf in hosebed over the (2) 14" high dividers hinged on right side 20" wide x 84" long. Includes hosebed dividers and discharge cover boxes. | $3,564 |
| 3340-0227 | Divider Long. To be split for rear mount hosebed application. Main body hosebed divider to be squared on both ends. Rear hosebed divider to have radius end. | $766 |
| 3340-0228 | Storage area for misc. equipment located above the upper speedlay compartment on driver side rear. Includes divider with (2) 6' pike pole with D-Handle and two small shovels (remaining space with pike poles high-approx. 5' foot deep). Includes smooth plate door with push button latch. | $2,169 |
| 3340-0229 | Speedy Dry Hopper. Locate [#LOC]. Includes discharge chute in compartment directly below roof top compartment with close off valve and extension hose for ground level dispensing. Capacity of speedy hopper is 50 lbs. | $1,224 |

| Item No. | Description | |
|---|---|---|
| 3340-0230 | (4) Removable aluminum trays for the rear preconnects. The (2) driver and (1) officer upper trays to hold 200' of 1.75" DJ hose. The (1) officer lower tray to hold 150' of 3" DJ hose (tray will be longer front to rear for capacity). Each tray is removable from the rear of the body and include handhold cut outs on each side (4 total) and (2) handrails mounted side to side and placed 13" back from tray edge. | $1,642 |
| 3340-0231 | Nylon black cargo net(s) in interior compartment opening(s) behind lift-up doors of [#LOC]. Cargo net(s) to be held in place at top between two (2) pieces of flat bar through-bolted. Cargo net(s) to be held in place at bottom with twist-locks outboard and snaps inboard. Two (2) velcro straps to be installed: (1) on rear of flat bar and (1) on cargo net to hold in place for compartment access. | $694 |
| 3340-0232 | Directional Lightbar Box. Located on rear area of body between upper rear hosebed side tubes. Box to be diamond plate. | $598 |
| 3340-0233 | Speedy Dry Hopper. Locate roof top compartment above R3. Includes discharge chute in compartment directly below roof top compartment with close off valve and extension hose for ground level dispensing. Capacity of speedy hopper is 68 lbs. | $1,275 |
| 3340-0234 | Divider Long. To run full length of hosebed (front to rear). Rear of divider to have cut at 45 degree angle and hand hold cutout at 45 degree angle. | $513 |
| 3340-0235 | Rubrail for the body and pump area module(s). Rubrail for rear of tailboard not included. | $780 |
| 3340-0236 | Center hose bed walkway. Non-slip diamond plate walkway to run full length of hose bed. | $482 |
| 3340-0237 | Speedy Dry Hopper. Locate dunnage pan on officer side. Locate control on officer side pump panel plumbing to terminate approx. 20" above runningboard. Includes 2.5" Akron ball valve to control plow and provide cap. Includes snubber valve control of air to assist feed of speedy dry and a trash screen to in top of hopper. Capacity of speedy hopper is 200 lbs. | $2,989 |
| 3340-0241 | Rear diamond plate vertical hinged door on officer side roof top compartments. Includes thumb latch and wiring for door ajar switch. | $188 |
| 3340-0242 | Diamond plate storage box with hinged lid w/push button latches. Located in hosebed storage pan to be approx. 36"W x 60"L x 18"H. | $1,704 |
| 3340-0243 | Hose storage tray located on officer side compartment top. Tray to be full length of compartment top and have drainage slots on bottom of tray. Includes cargo net cover. | $1,816 |
| 3340-0245 | Nylon black cargo net(s) over exterior compartment opening(s) [#LOC]. Cargo net to be held in place with twist-locks. | $565 |
| 3340-0248 | Hosebed Storage Pan. Locate in forward area of hosebed. Extra width front to back for equipment generator and fill tower storage. | $1,537 |
| 3340-0251 | Half length driver side tunnel. Reduces driver side upper compartment depths of L2 and L3 to 12" deep IPO 26". Includes cut-out in hosebed side wall in forward area of L2. Cut-out to forward of Little Gaint sleeve. Includes cover plate with push button latches. | $2,105 |
| 3340-0252 | Bolt-in floor R2. Floor is in addition to the existing DP floor. Floor to have 2" raised forward area (tapered towards rear for securing cribbing) and run full length front to rear. | $229 |
| 3340-0253 | Backboard storage compartment. Locate in officer side ladder tunnel. Rack to be approx 2" wide. | $430 |
| 3340-0255 | Hosebed storage pan partition. Partition to seperate the booster reel from rest of pan. | $326 |
| 3340-0258 | A deflector shield will be placed in front of the light tower or A/C system. Construction aluminum diamond plate. Deflector will be in front of the forward most component. | $968 |
| 3340-0260 | Transverse module (full width and height of body) with lower storage areas and frame width transverse floor (compartment opening 48" wide and same height as main body compartments). Includes open front storage pan to driver side (same depth as staircase storage pan) transverse (front to rear) walkway area (inline with staircase and main body). | $6,273 |
| 3340-0261 | Stair case module (full width of body). Includes large compartment area with lower storage area and upper area open back storage pan. Stair case located to [#LOC]. | $8,972 |
| 3340-0264 | License plate sized number plate. Locate in license plate bracket(s). Plate to be painted job color. Lettering and/or graphics not included. | $220 |
| 3340-0265 | Diamond plate fill tower deflector. Locate around fill tower located in hosebed storage pan. To be four sided and bolt-in for removing and to be height of pan. | $344 |
| 3340-0271 | Nylon black cargo net in interior compartment opening behind door(s) of [#LOC]. Cargo net to be mechanically attached to bottom of compartment opening and bungee cords in the top corners. | $565 |
| 3340-0272 | Sign "Stay Back 500FT" with black reflective lettering. Locate B1 door above D-ring. | $139 |
| 3340-0276 | Hosebed divider(s) to be notched. Notch(es) to be 24" wide x 24" high at the upper front corner of the divider(s). | $271 |
| 3340-0279 | Hosebed above the booster tank. Includes forward hosebed with notch for boom support deflector for boom support and tower(s) cover plate work. Hosebed adjustable divider extrusion rearward of the furthest tower is to run full width of the hosebed. | $1,686 |
| 3340-0280 | Divider Long. To run full length of hosebed (front to rear). Locate on top of hard suction storage in hosebed. | $513 |
| 3340-0284 | The hosebed divider(s) to be notched on the rearward end for nozzle(s). | $271 |
| 3340-0285 | Bolt-in partition wall. Locate in centered (front to back) in driver side roof top compartment. | $338 |
| 3340-0290 | Full width partition(s) located in hosebed rearward of the fill tower(s). | $552 |

| Item No. | Description | |
|---|---|---|
| 3340-0291 | Removable number plate with mounting brackets. Locate [#LOC]. Plate to be painted job color. Plate to be 8"W x 20"H. Lettering and/or graphics not included. | $400 |
| 3340-0292 | Smooth plate single axle wheel well painted job color. Includes bolt-on composite wheel well liners. Wheel well plate(s) to be flush mounted. | $3,891 |
| 3340-0293 | Crosswalk and Speedlay module compartment Interiors to have Zolatone gray finish. Does not include floors if they are dia plt. | $735 |
| 3340-0294 | Recessed fuel fill officer side wheel well. | $306 |
| 3340-0299 | Transverse module (full width and height of body) with lower storage areas (compartment opening 67" wide and same height as main body compartments). Includes full width forward storage pan and a pan in the rearward center/officer area between the driver roof top compartment. Transverse floor to run full width. Rear headboard to have area for routing of plumbing for preconnects located in rearward area. | $7,376 |
| 3340-0305 | Body mainframe and hosebed side assemblies for a 90" high body. Includes modifications for 4x4 and plumbing applications as required. | $3,036 |
| 3340-0306 | Speedy Dry Hopper. Locate [#LOC]. Includes discharge chute in compartment directly below roof top compartment with close off valve and extension hose for ground level dispensing. Capacity of speedy hopper is 100 lbs. | $1,632 |
| 3340-0309 | Sign "Keep Back 300FT". White plate with red reflective lettering. Locate on rear ladder access door. | $139 |
| 3340-0313 | Locate Foam Fill Tower in the hosebed storage pan. Water Fill Tower located in the hosebed. | $444 |
| 3340-0319 | Bolt-on diamond plate 10" tailboard (full width of body). For use with rear ladder application. Includes handrails- (1) vertical on trailing edge of body opposite side of ladder and handrail(s) horizontal below hosebed. | $935 |
| 3340-0320 | Locate Tank Fill Tower(s) in the hosebed area. For use with hosebed storage pan for max storage pan capacity. | $781 |
| 3340-0321 | Driver side hosebed storage box. Storage box to hold (3) pike poles and (3) backboards. Pike poles to be stored down low. Backboards to be stored up high with dividers seperating storage for each board. Includes vertically hinge hinged door (wired to door ajar) with D-ring latch. | $1,377 |
| 3340-0322 | Diamond plate deflector shield for Light Tower. Deflector to be mounted to forward area of hosebed storage pan. Includes cross mounting structure in hosebed storage pan for Light Tower mounting. | $1,325 |
| 3340-0323 | Partitions to seperate the side rear compartments from the rear compartment to be pop riveted into place. | $58 |
| 3340-0324 | Body mainframe and hosebed side assemblies for a 98" high body. | $4,375 |
| 3340-0327 | Heat Pan for rear mount pump application. Includes notching for tow eyes and rear hitch receiver (as applicable). Pan to not interfere with the connections of any towing hooks. | $2,193 |
| 3340-0335 | Door pass thru. A Cast Products Inc. CPI sealed pass thru door shall be provided. There will be a sealed pass thru from the outside of the truck to the inside for wires. Opening size 5-1/2"T x 5-5/8"W. Locate [#LOC]. | $135 |
| 3340-0341 | Diamond plate raised cover with rubber hold-downs. Locate forward area of dunnage pan above transverse compartment. Hinge forward and wire to door ajar incicator in cab. Includes (1) bracket mounted LED light. | $542 |
| 3340-0343 | Body mainframe and hosebed side assemblies for a 95" high body. Includes height of rear body/pump module. | $1,217 |
| 3340-0344 | Hosebed above the booster tank and rear pump. Includes forward hosebed and tower(s) cover plate work (as applicable). Hosebed adjustable divider extrusion rearward of the furthest tower is to run full width of the forward hosebed. | $1,686 |
| 3340-0345 | Hosebed above the booster tank and rear pump. Includes forward hosebed and tower(s) cover plate work (as applicable). Hosebed adjustable divider extrusion rearward of the furthest tower is to run full width of the hosebed. | $1,205 |
| 3340-0348 | Divider Short. To be split for rear mount hosebed application. Main body hosebed divider to be squared on both ends. Rear hosebed divider to have radius end. | $663 |
| 3340-0349 | Divider Medium. To be split for rear mount hosebed application. Main body hosebed divider to be squared on both ends. Rear hosebed divider to have radius end. | $714 |
| 3340-0350 | Hosebed Storage Pan (24" front to rear). Locate in forward area of hosebed. | $467 |
| 3340-0351 | Hosebed Storage Pan (40" front to rear). Locate in forward area of hosebed. | $770 |
| 3340-0352 | Special hosebed configuration. To have the following dividers: (4) 14" high long dividers (1) short (1) medium and (2) long standard height dividers and storage for (1) hardsuction with drop down door with bumpers wired to door ajar (do not shorten hosebed handrail length). Provide hosebed slats above storage with (1) adjustable divider. Reference layout in file. | $5,768 |
| 3340-0357 | Body mainframe and hosebed side assemblies for a 85" high body. Includes modifications for 4x4 and plumbing applications as required. | $1,521 |
| 3340-0358 | Backboard storage sleeve for (1) board. 4"H x 20"W x 76"L. Includes (2) retaining straps (1) each side for boards. Location: Horizontally mounted through L3/B1/R3. | $707 |

| Item No. | Description | |
|---|---|---|
| 3340-0359 | Backboard storage box. Located in [#LOC]. Includes sanded smooth plate exterior with smooth plate interior with (1) velcro strap on each end. Sized to hold (3) backboards and spaced 3" per space. | $780 |
| 3340-0360 | Access panel on back wall of compartments L3 and R3 for access to the jet dump and rear tank inlet plumbing. | $277 |
| 3340-0362 | Black Dri-Deck flooring to be installed on floor of the backboard storage hosebed storage pan and both medical cabinets. | $1,263 |
| 3340-0363 | Hosebed Storage Pan. Locate in forward area of hosebed. Pan to be 30" wide. | $992 |
| 3340-0364 | Diamond Plate Hosebed Storage Pan Cover. Cover to be split due to ladder rack for access when in stowed position. Includes D-ring latches and gas shock(s). Hinge to the rear of the hosebed storage pan. | $1,627 |
| 3340-0365 | Hosebed deflector divider. Locate to driver side rear of hosebed forward of deck gun. Deflector to only cover the forward and side of the deck gun piping. Rear area fo hosebed to be open for access from driver side rear. | $343 |
| 3340-0367 | Sign "NO STEP". White vinyl background with red reflective lettering. Locate (1) each forward and rearward on each of the hosebed cover doors. | $139 |
| 3340-0370 | Body mainframe and hosebed side assemblies for a 80" high body. Includes modifications for 4x4 and plumbing applications as required. | $306 |
| 3340-0371 | Crosswalk module compartment Interiors to have Zolatone gray finish. Does not include floors if they are dia plt. | $369 |
| 3340-0373 | The R1 compartment to have smooth plate floor and compartment walls to be non-louvered. | $292 |
| 3340-0374 | Sign "Stay Back 300FT" with black reflective lettering. Locate below rear of body. | $139 |
| 3340-0376 | Diamond plate single axle wheel well. Includes fenderettes and bolt-on aluminum wheel well liners sanded finish. | $2,096 |
| 3340-0382 | Body main frame and hose bed side assemblies for a 78" high pumper body. | $1,105 |
| 3340-0383 | Body main frame and hose bed side assemblies for an 83" high pumper body. | $1,217 |
| 3340-0384 | Body main frame and hose bed side assemblies for an 88" high pumper body. | $2,430 |
| 3340-0385 | Body main frame and hose bed side assemblies for a 93" high pumper body. | $3,645 |
| 3340-0386 | Mateflex brand [#COL] floor matting covering all applicable compartment floors shelves and roll-out trays. | $1,789 |
| 3340-0387 | Full width of hose bed stainless steel transverse storage divider. Located in forward area of hose bed to separate equipment items such as generator etc. from the main storage area. Main hose bed dividers will be located rearward of the transverse divider. | $770 |
| 3340-0388 | Brushed stainless steel rubrails for the sides of the body below the lower side compartments. | $780 |
| 3340-0389 | Stainless steel rear fender panels painted job color. (Recommended for FRP paint process compatibility!) Includes bolt-on stainless steel inner wheel well liners (not painted) and polished stainless steel outer fenderettes. | $1,683 |
| 3340-0390 | Stainless steel rear fender panels with aluminum treadplate overlays IPO painted finish. Includes bolt-on stainless steel wheel well liners (not painted) and polished stainless steel outer fenderettes. | $1,278 |
| 3340-0391 | Body mainframe and hosebed side assemblies for a 83" high body. | $1,217 |
| 3340-0392 | Underbody full width mudflap behind rear axle (as applicable) mounted to body. | $646 |
| 3340-0394 | Hosebed Storage Pan (36" front to rear). Locate in forward area of hosebed. | $694 |
| 3340-0395 | Pike pole storage box. Located in the officer side of the hose bed (full length). Includes vertically hinged door (wired to door ajar) w/push-button latch. Box to hold: (4) 10' pike poles. | $1,417 |
| 3340-0396 | A deflector shield will be placed in front of the light tower or A/C system. Deflector will be in front of the forward most component. Deflector will be painted [#COL]. | $1,205 |
| 3340-0403 | Diamond plate side dump panels. Includes lift-up diamond plate doors with spring loaded hinges. | $467 |
| 3340-0404 | Smooth plate side dump panels. Includes lift-up smooth plate doors with spring loaded hinges. Smooth plate panels painted job color. | $887 |
| 3340-0405 | Sign "STAY BACK 500 FEET" with black reflective lettering. Locate below rear of body. | $139 |
| 3340-0406 | Sign "Stay Back 150 Metres" with black reflective lettering. Locate below rear of body. | $139 |
| 3340-0407 | Hosebed above the booster tank. Hosebed assembly to be 3-piece design due to stepped hosebed. Includes forward hosebed and tower(s) cover plate work (as applicable). Hosebed adjustable divider extrusion rearward of the furthest tower is to run full width of the hosebed. | $2,237 |
| 3340-0408 | Adjustable ladder brackets. Locate in track [#LOC]. | $508 |
| 3340-0409 | Adjustable tracks (pair). Locate tracks to [#LOC] assembly. For use with ladder and/or hard suction rack(s). | $201 |
| 3340-0412 | Bolt-on diamond plate 24" tailboard (full width of body). Includes (2) squared off 12" deep beavertails (no stanchions) with removable outer panels and handrails- (2) vertical on trailing edge of body and horizontal mounted handrail(s) below hosebed. For use with swivel style rear tank dump only. | $1,144 |
| 3340-0413 | Wheel Chocks 44" NFPA Complaint - Pair of Zico SAC-44. Up to 44" diameter Tires. Includes mounting bracket. Locate [#LOC]. | $672 |
| 3340-0414 | Body main frame and 46" wide hose bed for a 90" high rescue pumper body. | $2,430 |

| Item No. | Description | |
|---|---|---|
| 3340-0415 | Body main frame and 46" wide hose bed for a 97" high rescue pumper body. | $3,645 |
| 3340-0416 | Removable number plate with mounting brackets. Locate driver side outboard of B1. Plate to be painted job color. Plate to be 10"W x 10"H. Lettering and/or graphics not included. | $282 |
| 3340-0417 | Removable number plate with mounting brackets. Locate driver and officer side of the cab below canopy window. Plate to be painted job color. Plate to be 12"W x 12"H. Lettering and/or graphics not included. | $282 |
| 3340-0420 | Smooth plate panels of body interior compartments to have zolatone (gray) finish. | $3,721 |
| 3340-0455 | Reinforce compartment [#LOC] for storage of heavy equipment. The compartment to be capable of storing up to 1000lbs of equipment. | $337 |
| 3340-0460 | Body main frame and hose bed side assemblies for a 78" high body with low hose bed and "L" shaped water tank. | $1,380 |
| 3340-0461 | Body main frame and hose bed side assemblies for an 83" high body with low hose bed and "L" shaped water tank. | $1,658 |
| 3340-0467 | Roof top compartment Interiors to have Zolatone gray finish. | $1,974 |
| 3340-0470 | The outboard panels of the roof top compartments or full width hosebed as applicable to be smooth plate overlays. These areas are to be seamless and painted job color. | $2,734 |
| 3340-0472 | Compartment floors to be flush for sweep out. | $645 |
| 3340-0482 | Roof top compartments on driver and officer side to have 1" drain holes with tubing and plugs. | $277 |
| 3340-0483 | Divider Long. To run full length of hose bed (front to rear). Divider 3/4 height of hose bed depth (top to bottom). For use with low hose bed configurations only. | $513 |
| 3340-0485 | Body mainframe and hosebed side assemblies for a 95" high body. Includes modifications for 4x4 and plumbing applications as required. | $4,374 |
| 3340-0486 | Diamond plate single axle wheel well. Includes bolt-on composite wheel well liners and bolt-on polished alum fenderettes. | $1,052 |
| 3340-0488 | Divider long for use with hosebed preconnect. Divider to be set back and/or notched at forward area of hosebed for access to preconnect line connection. | $513 |
| 3340-0494 | Rubrail for the body. | $780 |
| 3340-0499 | Storage area to officer side of center hosebed divider. Area to include (from driver to officer side): (1) 10" H x 10" W. This includes (1) divider with square ends and hosebed style top. Remaining are to be for horizontally stored backboards (2). Area to be 6" H x remaining hosbed width with a hosebed style top (full length of hosebed).Each storage area to have a drop down diamond plate door with push button latching and each wired to door ajar indicator in cab. | $664 |
| 3340-0500 | [#LOC] compartment walls are to be non-louvered. | $241 |
| 3340-0509 | The outboard panels of the roof top compartments to be smooth plate overlays. These areas are to be seamless and painted job color. | $2,734 |
| 3340-0511 | Bolt-in partition walls. Locate in lower rear compartment transverse area. Partitions to seperate the L3 compartment from the rear compartment. | $123 |
| 3340-0512 | I-Zone brackets mounted on driver and officer rear body compartment face up high. Includes 14" removable poles with keeper pins. | $237 |
| 3340-0514 | Compartment R1 to have no louvers. Requires roll-up door application. | $112 |
| 3340-0516 | Storage Pan Hot Shot II Hydraulic Reservoir. Includes a hinged lid with gas shock hold open. | $770 |
| 3340-0519 | Removable number plate with mounting brackets. Locate [#LOC]. Plate to be painted job color. Plate to be 12"W x 12"H. Lettering and/or graphics not included. | $295 |
| 3340-0520 | Smooth plate single axle wheel well painted job color. Includes bolt-on composite wheel well liners and bolt-on polished alum fenderettes. | $1,575 |
| 3340-0521 | All body and pump module compartments (if applicable) and/or storage areas to have no louvers or vents. | $277 |
| 3340-0526 | Hose bed storage pan to extend forward over eMAX transverse storage area(s). | $326 |
| 3340-0527 | 2x2 angle to be located full width of opening of compartment L2. | $180 |
| 3340-0530 | Removable number plate with mounting brackets. Locate [#LOC]. Plate to be painted job color. Plate to be 12"W x 8"H. Lettering and/or graphics not included. | $269 |
| 3340-0543 | Transverse sleeve thru backwall of compartments L1 and R1. Transverse area to be approx. 32" wide x 18" high x 47" deep. | $765 |
| 3340-0555 | Roof top compartments to have raised push button latches in place of turn latches. | $340 |
| 3340-0560 | Rolled hose rack for (4) hose rolls. Includes (3) adjustable dividers to be 18" high x 24" deep each with adjustable tracking on floor. Locate in floor of L1 compartment. | $605 |
| 3340-0562 | Universal air pack bottle bracket installed on backwall of compartment [#LOC]. | $156 |
| 3340-0567 | Underbody UltraGuard splash guard behind rear axle mounted to body. | $548 |
| 3340-0576 | Mateflex brand [#COL] floor matting covering all applicable compartment floors shelves and roll-out trays. | $1,083 |
| 3340-0577 | Bolt-in partition wall. Located forward of electric cord reels in driver and officer side roof top compartments. | $227 |
| 3340-0578 | Bolt-on trim panels to be installed over the side walls extrusions of the driver and officer side roof top compartments. | $853 |

| Item No. | Description | |
|---|---|---|
| 3340-0579 | Provide (2) two inch conduits with pull wires in them for dealer/customer installed equipment. Locate (1) from driver side forward roof top compartment to the hydraulic ports on the front bumper and (1) from driver side forward roof top compartment to the hydraulic ports in the B1 compartment. | $450 |
| 3340-0585 | Ladder storage box. Located in the driver side of the hosebed. Includes vertically hinged door (wired to door ajar) w/push-button latch and composite flooring. Box to hold: (1) Alco-lite CJL-12 ladder. Deletion of aluminum hose bed cover center divider notch may be required as applicable. | $646 |
| 3340-0586 | Storage pan over eMAX transverse storage area(s). | $460 |
| 3340-0588 | Slip-on painted steel dump elbow and 36" straight extension chute. Includes body mounted removable support arm and mounting brackets at rear of body for elbow and straight chute. | $1,340 |
| 3340-0589 | Body main frame and 46" wide hose bed for a 83" high rescue pumper body. Intended for use with overhead ladder rack and stay under 10' OAH. | $2,430 |
| 3340-0591 | Hose bed bulkhead divider stainless. | $571 |
| 3340-0597 | Handrail to be mounted between stanchion posts. Stanchion post be 6" high and set back 11" from back of body. | $508 |
| 3340-0599 | Hosebed storage box. Located in the driver side of the hosebed. To hold (2) backboards (2) 10' pike poles and (1) 10' attic ladder with access from a vertically hinged diamond plate door (wired to door ajar) with a push-button latch. | $1,537 |
| 3340-0600 | Bolt-in partition walls. Locate in lower rear compartment transverse area. Partitions to seperate the R2 compartment from the rear compartment. | $123 |
| 3340-0602 | Diamond plate side dump panels. Includes drop-down diamond plate doors with counter balanced actuation. | $683 |
| 3340-0603 | Removable number plate with mounting brackets. Locate [#LOC]. Plate to be painted lower job color (if cab is painted two tone). Plate to be 8"W x 14"H. Lettering and/or graphics not included. | $295 |
| 3340-0605 | Removable number plate with mounting brackets. Locate [#LOC]. Plate to be painted upper job color (if cab is painted two tone). Plate to be 14"W x 8"H. Lettering and/or graphics not included. | $295 |
| 3340-0614 | [#COL] edge trim for floor mounted Turtle Tile matting. Locate on door opening side only. Requires seperate floor matting option. | $391 |
| 3340-0615 | Pan mounted diamond plate 3 sided generator shield. Includes partition in storage pan for driver side wall. | $968 |
| 3340-0616 | Tool air system. Includes 6000 PSI DOT cyl bottle rack fill panel. Rack located driver side roof top compartment. Fill panel adjacent to breaker box In L1. | $4,900 |
| 3340-0617 | The following items to be sanded smooth plate painted with black Scorpion coating place of standard diamond plate: Compartment tops roof top compartment lids hosebed storage pan transverse module storage pan aluminum hosebed covers tailboard rear intermediate steps transverse module running boards. | $3,221 |
| 3340-0623 | There shall be a compartment below side dumps it will include a vertically hinged access door (one each side) below the side dumps with push button latch. Doors to match dump panel material. Compartment dims to be approximately 15" high x 24" wide x 26" deep. | $288 |
| 3340-0626 | Body mainframe and hosebed side assemblies for a 94" high body. | $3,645 |
| 3340-0630 | Upper hosebed above the upper section of the booster tank. Includes forward hosebed cover plate work and modifying hosebed storage pan to be 39" wide above upper section of booster tank. | $1,079 |
| 3340-0631 | Removable number plate with mounting brackets. Locate [#LOC]. Plate to be painted body job color. Plate to be 8"W x 14"H. Lettering and/or graphics not included. | $295 |
| 3340-0632 | Body main frame and 59" wide hose bed for a 90" high rescue pumper body. | $2,430 |
| 3340-0633 | Removable Poly hose bed storage tray (EA). The floor of the tray(s) to be slotted to prevent the accumulation of water and allow for ventilation of wet hose. | $560 |
| 3340-0635 | Mud flaps in front of rear wheels black with no logo. Install additional row of fasteners close to bottom of wheel well. | $224 |
| 3340-0636 | Fill Tower support bracket to be held 1/4" back from fill tower and attached to front hosebed wall. | $122 |
| 3340-0637 | Cover plates around rear frame mounted tow eyes in B1 compartment. | $122 |
| 3340-0638 | Bolt-in partition wall. Located rearward of air cord reel in officer's side roof top compartment. | $227 |
| 3340-0639 | Front of hose bed stainless steel partial storage divider on officer side for selected accessory such as a generator. Located in forward area of hose bed to separate the storage area from the main hose storage area. Applicable main hose bed dividers will be located rearward of the partial divider. | $817 |
| 3340-0641 | Removable number plate with mounting brackets. Locate [#LOC]. Plate to be painted upper cab job color. Plate to be 5.5"H x 11"W. Lettering and/or graphics not included. | $295 |
| 3340-0643 | Stainless steel trim for lower edge of rear mudflap (PR). The trim shall be 2" in height and go full width of the mudflap. The material shall be "polished" stainless steel and it will be mounted to the lower edge of the rear (back side) of the mudflaps. | $325 |
| 3340-0644 | Flooring plate additional in L2 and R2 compartments. 3/16" aluminum smooth plate to be bolted in place 1/2" above standard diamond plate compartment floors. | $162 |

| Item No. | Description | |
|---|---|---|
| 3340-0646 | (2) officer side roof top compartments with extra width to inboard side. Includes hinged raised compartment lids ("embossed" treadplate) with turn latches grab handle(s) and gas shock hold open and drain line(s) ran to below body. Each lid to have (1) bracket mounted LED light and to be wired to door ajar indicator in cab. | $5,301 |
| 3340-0647 | Roof top compartment doors shall have larger latches installed (Southco model C5-11-15 latch C5-82 gasket) in place of standard. | $234 |
| 3340-0650 | Fill tower partition. "U" shaped partition to be located around water fill tower and extend rearward to bolt to rear surface of storage pan. This 1/8" diamond plate "hat" section shall provide fill tower protection within the hose bed. | $333 |
| 3340-0651 | Piping cover where visible for discharge piping above pump enclosure to front of hose bed (each). Cover to be stainless steel to blend with surrounding area. | $494 |
| 3340-0652 | Stainless steel trim for lower edge of front mudflap (PR). The trim shall be 2" in height and go full width of the mudflap. The material shall be "polished" stainless steel and it will be mounted to the lower edge of the rear (back side) of the mudflaps. | $325 |
| 3340-0653 | Diamond plate tandem axle wheel well. Includes bolt-on composite wheel well liners and bolt-on polished alum fenderettes. | $2,102 |
| 3340-0662 | Recessed fuel fill with flat latching stainless steel door. Door style to match SCBA doors. | $283 |
| 3340-0664 | Backboard storage box. Located in the officer side of the hosebed. To hold (1) backboard with access from a vertically hinged diamond plate door with a lift and turn latch. The box to only run the length of the backboards. | $523 |
| 3340-0666 | Mounting for directional light bar. Located on rear area of body below upper or intermediate step. | $126 |
| 3340-0673 | Storage box with (2) drop down doors. Diamond plate box to be approx. 136" long x 12" high x 12" deep mounted on officer side compartment top between hosebed side tubes. Includes hinged drop down doors with locking D-ring latches (wire to door ajar). | $975 |
| 3340-0675 | The outboard panels of the rear body to be smooth plate overlays. These areas are to be seamless and painted job color. | $2,707 |
| 3340-0683 | Hosebed storage pan. Locate in forward area of hosebed. Pan depth shall be approximately 18". | $1,086 |
| 3340-0690 | Slide-out Speedy Dry Hopper. Tray mounted to floor mounted tray that is located in R3 forward. Capacity of hopper is 100 lbs. (Tray not included which must be selected separately.) | $1,632 |
| 3340-0695 | Soda ash hopper. Locate [#LOC]. Includes discharge chute in compartment directly below roof top compartment with close off valve and extension hose for ground level dispensing. The hopper shall be constructed of stainless steel holding capacity shall be 200 lbs. | $2,198 |
| 3340-0697 | Power vent system located in [#LOC]. Wired through receptacle in compartment. | $202 |
| 3340-0699 | Bolt-on cover plate over upper section of water tank to be embossed diamond plate. | $587 |
| 3340-0702 | Hosebed storage box. Located in the driver side of the hosebed. To be 76" long X 25" wide X hosebed depth. Box to have diamond plate top with approx. 4" upper. 4" middle and 8" lower storage space. Includes a vertically hinged diamond plate door (wired to door ajar) with a push-button latch.Hinge door to outside. | $1,537 |
| 3340-0703 | Diamond plate box for directional lightbar. Box to be mounted on 3" x 3" aluminum angle at rear of hosebed decking. Includes two (2) Whelen M6 Super LED scene lights to be surface mounted to box outboard. | $1,351 |
| 3340-0707 | Upper right side of body to be notched to allow hydraulic overhead ladder rack to be lowered for reduced travel height. Compartment opening height to remain std. | $1,601 |
| 3340-0708 | The outboard panels of the driver side roof top compartments to be smooth plate overlays. These areas are to be seamless and painted job color. | $1,369 |
| 3340-0709 | Vertical handrails as mounted the rear body shall extend full height from the bottom of the body to the top of the body IPOS (as practicality permits). | $137 |
| 3340-0710 | Transverse storage modification affecting L3 B1 and R3 compartments to accommodate a transverse storage area running from L3 to R3 (lower area only). The transverse tunnel area shall be approximately the full depth of the B1 compartment the compartment opening height shall start approximately 2" above the floor to maximum height available (height may be reduced as required depending upon the rear body storage tunnel foot print). The B1 compartment side walls will be opened (removed) as part of the transverse modifications necessary. | $1,144 |
| 3340-0713 | Diamond plate deflector shield for Light Tower. Deflector to be mounted on driver side compartment top at front of body. See photos on file. | $416 |
| 3340-0714 | Bolt-in floor [#LOC]. Floor is in addition to the existing DP floor. Floor to have 2" raised forward area (tapered towards rear for securing cribbing) and run full length front to rear. | $229 |
| 3340-0716 | Bolt-in SS floor taper [#LOC]. Floor taper is in addition to the existing stainless steel floor. Floor to have 1.5" raised outer area (tapered towards back wall for securing cribbing) and run full length side to side. | $229 |
| 3340-0720 | Slip-on painted steel dump elbow and 36" straight extension chute. Includes body mounted removable support arm and mounting brackets in compartment [#LOC] for elbow and straight chute. | $1,340 |

| Item No. | Description | |
|---|---|---|
| 3340-0723 | All compartment floors to have Zolatone gray finish. Includes changing floors from diamond plate to smooth plate. | $1,895 |
| 3340-0725 | Rear vertically hinged door for the officer's side roof top compartment. The door includes thumb latch(s) and wiring for the door ajar switch. The material shall be 1/8" aluminum smooth plate and the hinge shall be placed outboard. | $126 |
| 3340-0726 | Nylon black cargo net for interior compartment opening of compartment [#LOC]. Cargo net to have custom designed one-piece bar assembly and one step Velcro attachment process with footman loops shall be used opposite the bar end. | $313 |
| 3340-0727 | Body main frame and hose bed for a 85" high stainless steel eMAX rescue pumper body. | $1,539 |
| 3340-0728 | Body main frame and hose bed for a 90" high stainless steel eMAX rescue pumper body. | $2,963 |
| 3340-0729 | Body main frame and hose bed for a 95" high stainless steel eMAX rescue pumper body. | $4,447 |
| 3340-0730 | Smooth plate corner guards for the driver and officer front and rear compartment faces. Guards to wrap around the corner and be full height of side assembly or to a max of 96". Corner guards to be painted black durabak. | $933 |
| 3340-0731 | Access panels thru B1 interior officer side and into rear of R4. Service access rear of fill station controls. Access panel to be sized as large as possible to accommodate sevice operations. | $478 |
| 3340-0736 | Body main frame and hose bed side assemblies for an 83" high body with low hose bed and "L" shaped water tank. No upper rear crossover hand rail. | $1,447 |
| 3340-0737 | Body mainframe and hosebed side assemblies for a 100" high body. | $4,858 |
| 3340-0738 | A landing platform (10" in depth the width shall be sized and positioned as required with overall rear end configuration) with embossed diamond plate surface will be centrally located at the upper rear of the apparatus to assist with hose bed cover operations. | $376 |
| 3340-0739 | Turtle Tile brand floor matting covering driver and officer roof top compartment floors full length and width. Color: [#COL]. | $633 |
| 3340-0740 | Divider shroud for cab tilt pump bolt in R1. | $190 |
| 3340-0742 | Hose bed walkway offset to driver side. Non-slip diamond plate walkway to run full length of hose bed. | $482 |
| 3340-0743 | Backboard Storage sleeve. Located in the officer side hard suction storage compartment. Sleeve to hold (1) backboard 2"H x 16" W x 73" L. Includes stop bracket approximately 74" back from opening. | $430 |
| 3340-0744 | Full width hosebed above the booster tank from the driver side extra wide roof top compartments to the officer side with raised side assemblys. | $1,861 |
| 3340-0745 | Divider Support to run full available width of hosebed (side to side not including hosebed walkway) at the front of the hosebed and at the rear of the hosebed at top of the divider(s) even with the top of the hosebed. Position inboard divider to be utilized as a walkway sidewall and add an aluminum angle bracket along the length of the divider on the hosebed side to facilitate mounting of twist-lock fasteners for the hosebed cover. | $461 |
| 3340-0746 | CTECH Brand 4 drawer compartment toolbox unit in [#LOC]. Includes Cal Gray drawer face finish with two (2) 8" drawers below and two (2) 3" drawers above to mount in an available compartment opening. Toolbox dimensions to fit in an opening 39.5" W X 23.0" H X 24". Requires a fixed shelf mounted above toolbox enclose top drawer and to create opening height added separately. | $2,041 |
| 3340-0747 | Compartment heater as high as possible on forward wall. Includes switch on driver overhead. Location: [#LOC]. | $1,244 |
| 3340-0749 | Directional light bar box. Located on rear area of body between upper rear hose bed Unistruts. Box to be .125" diamond plate and mounted to structural stainless steel framework including Unistrut channel for hose bed divider attachment. SS product only. | $2,362 |
| 3340-0750 | Four (4) divider supports to attach to each top rear edge of each hose bed divider to provide additional support. Ship loose for dealership installation. SS product only. | $252 |
| 3340-0752 | Embossed diamond plate in place of ALL standard and optioned diamond plate on body and modules. | $1,462 |
| 3340-0754 | Hosebed storage pan constructed of 3/16" (.187") aluminum smooth plate with black Scorpion coating (rough finish) IPOS diamond plate. Locate in forward area of hosebed. | $977 |
| 3340-0757 | Floor overlay [#LOC]. The overlay shall be constructed of 1/8" treadplate and shall be raised at the interior wall 1" providing a sloped floor (low point at the door opening). | $389 |
| 3340-0758 | Speedy dry hopper. Locate [#LOC]. Includes discharge chute in compartment directly below roof top compartment with close off valve and extension hose for ground level dispensing. Capacity of speedy dry hopper is 180 lbs for a shorter upper body (less than 19"). | $1,632 |
| 3340-0767 | Dividers bolt in Qty (2) for transverse compartment. Location between L3/R3. One (1) divider to be located 26 inches deep from L3 and one 28 inches deep R3 door opening so as to generate a compartment located over chassis centerline. | $988 |
| 3340-0771 | Special hose bed divider height and reinforcement. The height of the hose bed divider from driver to officer side: 1st divider 36"T 2nd divider 30"T. Each divider shall have a round reinforcement welded in place on the forward and rear vertical edges and the top horizontal edges to stiffen the dividers as mounted. | $257 |

| Item No. | Description | |
|---|---|---|
| 3340-0772 | Rear wheel well trim shall be added to both sides of the unit. Diamond plate 1/16" thick shall be added to the 4" extrusion that surrounds the wheel well. The extrusion forward rear and on top of the wheel well shall have a diamond plate overlay added. | $210 |
| 3340-0775 | Stokes basket storage box for a Ferno Washington model 71. The storage box shall be made from diamond plate material approx 9" wide x 26" tall x 90" deep. It shall include a rear mounted door with a vertical hinge and a thumb latch. Location officer side hosebed. | $1,740 |
| 3340-0777 | Slip-on stainless steel dump elbow and 36" straight extension chute. Includes body mounted removable support arm and mounting brackets in compartment [#LOC] for elbow and straight chute. | $1,736 |
| 3340-0778 | Wheel well liner extensions for inboard side of rear wheel well liners (PR). | $344 |
| 3340-0779 | All folding steps shall be Signature Fire Shopp brand. The folding steps shall be dual LED (top and bottom) model 101953-2 IPOS. | $159 |
| 3340-0785 | There shall be no visible diamond plate on the body exterior. | $318 |
| 3340-0786 | Dual Hosebed above the booster tank. Includes forward hosebed cover plate work (as applicable). Hosebed adjustable divider extrusion rearward of the furthest tower is to run full width of the hosebed in the upper hose bed. (as is practical with other hosebed mounted equipment). Lower hose bed over tank shall have one non adjustable center divider hard mounted to divide lower hosebed into (2) equal width storage compartments for dealer added pull out hosetrays with nylatron slide plates | $3,034 |
| 3340-0788 | Storage Pan Hot Shot II Hydraulic Reservoir. Includes a lid hinged forward with gas shock hold open. | $770 |
| 3340-0789 | Hosebed storage pan. Locate in forward area of hosebed. Storage pan to be 109" interior length for Night Scan NSP7.5 light tower. | $1,539 |
| 3340-0790 | Swing arm bracket with smooth plate box for TAL65 lightbar mounted on square extrusion. Swing arm to be mounted at rear of hosebed with pivot tower and (2) locking towers to be provided. | $737 |
| 3340-0791 | Body mainframe and hosebed side assemblies for a 87" high body. | $2,430 |
| 3340-0795 | Stainless steel rear fender panels.Includes bolt-on stainless steel inner wheel well liners (not painted) and polished stainless steel outer fenderettes. | $1,548 |
| 3340-0796 | Body main frame and hose bed side assemblies for a 94" high rescue pumper body. | $3,548 |
| 3340-0797 | Body main frame and hose bed side assemblies for a 88" high pumper body. | $4,162 |
| 3340-0798 | Extruded aluminum rubrails for the sides of the body below the lower side compartments and full width of the rear tailboard. | $684 |
| 3340-0799 | A cut-out shall be provided on the lower right rear panel of the body accessing a hydrant assist valve that will be located in compartment R3. Door opening shall be a minimum of 14" wide x 19" high. A vertically hinged smooth plate rear door shall be provided with a bent D-ring latch and a light wired to door ajar indicator circuit. | $1,300 |
| 3340-0800 | Notched hosebed divider(s). Notch to be in center approximately 32" up from floor and angle up 45 degrees at each end. See photo on file. | $432 |
| 3340-0801 | Special hose bed divider reinforcement. Each divider shall have a round reinforcement welded in place on the forward and rear vertical edges and the top horizontal edges to stiffen the dividers as mounted. | $342 |
| 3340-0806 | Cab Body and Pump Module safety and warning Tags in French to be in addition to standard English E-One supplied Tags. | $1,576 |
| 3340-0807 | Speedy Dry Hopper. Locate in roof compartment above R2. Includes discharge thru bottom of compartment R3 along forward compartment wall with valve for ground level dispensing. Capacity of speedy hopper is 100 lbs. | $1,405 |
| 3340-0809 | Body main frame and hose bed for a 95" high stainless steel eMAX rescue pumper body. Hose bed to be 56" wide. | $4,447 |
| 3340-0811 | Two (2) stainless steel dividers with ADT doors to be installed in the upper forward body dunnage area with clearance for deck gun. Hinged outboard side. | $1,125 |
| 3340-0812 | Hose tray - Polypropylene - removable. Tray includes pull-out grab handle (poly dowel) down low on each end to facilitate lifting. The tray shall be sized to fit the area above the ground ladders. The tray(s) shall be made from Polypropylene the floor of the tray shall be slotted to prevent the accumulation of water and allow for ventilation of wet hose. | $867 |
| 3340-0813 | Driver side hosebed storage box. Storage box to hold (3) New York style pike poles and (3) backboards (2"x16"x71"). Pike poles to be stored down low. Backboards to be stored up high with dividers seperating storage for each board. Includes vertically hinge hinged door (wired to door ajar) with D-ring latch. | $1,377 |
| 3340-0821 | Locate (2) hosebed storage pans (1) each side of ladder storage box in forward area of hosebed. Pans to hold hydraulic cooler and hydraulic resevoir. | $876 |
| 3340-0823 | Body mainframe and hosebed side assemblies for a 85" high bi-level body. Includes stepped headboard. | $1,217 |
| 3340-0830 | Turtle Tile brand floor matting covering L1 R1 and B1 compartment floors only. Color: [#COL]. | $633 |

| Item No. | Description | |
|---|---|---|
| 3340-0833 | Above the right side ladder tunnel shall be a weather resistant top hatch compartment forward of the shovel and broom storage module. Compartment shall be approximately 12.75" wide x 74" long x 13.5" deep. Includes 3/16" polished aluminum treadplate door hinged outboard latching towards the hose bed. One (1) clear lens light shall be installed in the compartment and the lid shall be wired to the door ajar indicator in the cab. | $511 |
| 3340-0834 | Body main frame and hose bed side assemblies for an 83" high body with low hose bed and "L" shaped water tank. No upper cross over handrail. | $1,518 |
| 3340-0836 | Compartment pan drop down door inside to have Zolatone gray finish (door only). Location L2 and R2 drop down doors. | $238 |
| 3340-0837 | Cast products AD0039-1 switch box assembly with polished flange 120 grit directional finish on lid and concealed hardware and hinges mounted on the rear body. | $211 |
| 3340-0838 | Hosebed deflector divider. Locate to officer side rear of hosebed forward of deck gun. Deflector smooth plate to cover the forward and side of the deck gun piping. Rearward side of deflector at back of hose bed to be diamond plate. | $343 |
| 3340-0841 | Sign plate smooth 30" x 30" mounted centered on body roof. Color: [#COL]. | $244 |
| 3340-0847 | Rubrail for the body (sides only serrated surface facing down). | $581 |
| 3340-0849 | Rub rail assemblies constructed of 3" x 2" Black U.H.M.W. plastic. (1) bolted to the lower exterior edge of the apparatus body and pump module. Rub rail shall be mitered 45 degrees at leading and trailing end and notched for marker and warning lights clearance (where applicable) | $921 |
| 3340-0855 | There will be an access panel located in the hosebed for access to the water/foam tank level senders. | $112 |
| 3340-0861 | Reinforce flooring of compartment LTC and RTC for storage of heavy equipment. | $516 |
| 3340-0862 | Stainless steel trim on bottom edge of compartment opening of [#LOC]. Includes full height of exterior extrusion. | $159 |
| 3340-0863 | Headboard extrusions and smooth plate at top front of the body to be painted job color finished. | $200 |
| 3340-0864 | Diamond plate single axle wheel well. Includes bolt-on composite wheel well liners and sanded aluminum trim fenderettes. | $942 |
| 3340-0868 | Fire Shopp recessed fuel fills for dual fuel fill applications. Includes brushed finish S/S doors with positive latch. | $603 |
| 3340-0870 | Stainless steel trim on bottom edge and covering entire surface of extrusion below compartment opening of [#LOC]. | $192 |
| 3340-0874 | Reinforced hinged .188" embossed diamond plate lid for dunnage pan. Includes two (2) D-Ring latches stainless steel hinge along forward edge and gas shock hold open. Lid to be reinforced with welded on structure on underside to allow for lid to be a walking surface. | $701 |
| 3340-0880 | Brushed stainless steel scuff plates for all body handrails. | $488 |
| 3340-0882 | Body main frame and hose bed for a 97" high stainless steel eMAX rescue pumper body. | $4,541 |
| 3340-0883 | Rubber fenderette in place of weld-on. | $295 |
| 3340-0889 | Body mainframe and hosebed side assemblies for a 96" high body. | $3,888 |
| 3340-0890 | Divider Hose Bed Special Height iat standard. All Hose Bed Divider(s) shall include an extra 4" height over the standard hose bed divider height. | $202 |
| 3340-0892 | Rub rail assemblies constructed of 3" x 2" Black U.H.M.W. plastic. (1) bolted to the lower exterior edge of the apparatus body only. Rub rail shall be mitered 45 degrees at leading and trailing end and notched for marker and warning lights clearance (where applicable) | $624 |
| 3340-0894 | Smooth plate single axle wheel well painted job color. Includes bolt-on composite wheel well liners and bolt-on polished alum fenderettes. Wheel well plates to be flush mounted. | $3,164 |
| 3340-0895 | Smooth plate tandem axle wheel well painted job color. Includes bolt-on composite wheel well liners and bolt-on polished alum fenderettes. Wheel well plates to be flush mounted. | $5,152 |
| 3340-0896 | Body wheelwell driver side compartments (2) approx 24" W x 6" H x 26" deep. A gasketed drop down door shall be installed on each compartment. Door material to match wheelwell finish. | $710 |
| 3340-0898 | Rolled hose rack for (2) hose rolls (1) 5" LDH 9" wide (1) for the balance of tray. Includes (3) dividers attached to roll out tray in compartment L1. | $376 |
| 3340-0901 | (3) Removable number plates with mounting brackets. Locate (1) each side of cab rearward of driver and officer doors (1) driver side rear compartment face above taillights. Plates to be 5.25" tall X 5" wide and painted job color. Lettering and/or graphics not included. | $846 |
| 3340-0902 | Body wheelwell compartments (4) approx 24" W x 6" H x maximum depth permissible without interference with hydraulic line(s) reservoir(s) etc. A gasketed drop down door shall be installed on each compartment. Door material to match wheelwell finish. | $1,420 |
| 3340-0904 | Logo rear body to be mounted at final inspection. | $252 |
| 3340-0907 | Body mainframe and hosebed side assemblies for a 88" high body. | $2,430 |
| 3340-0908 | Slip-on stainless steel dump elbow and 36" straight extension chute. Includes body mounted removable support arm mounting brackets at rear of body for elbow and brackets for straight chute in R2 | $1,736 |
| 3340-0909 | Divider Long Fixed. To run full length of hose bed (front to rear) positioned fixed as close to center of hosebed ROM roll up door drum center as hose loading permits.. | $605 |

| Item No. | Description | |
|---|---|---|
| 3340-0910 | Label wheel well doors with 1x3 labels to read applicable contents per location. Mechanically attached lable to each location required. | $21 |
| 3340-0911 | A polypropylene storage box for foan cannisters shall be supplied. The storage shall be for fourteen (14) cannister 7 wide x 2 high. Each compartment shall be 6" wide x 11" high. There shall be NO back wall on the box. | $1,540 |
| 3340-0915 | Body main frame and 46" wide hose bed for a 95" high rescue pumper body. | $3,300 |
| 3340-0918 | Wheel Chocks Alum HGS Heavy Includes Brackets. Locate below compartment ahead of Drivers side rear wheels. | $546 |
| 3340-0919 | Diamond plate Storage Box. Located on the driver side compartment top for long tool storage. Includes hinged raised compartment lid with turn latches and grab handle(wired to door ajar indicator). Box to be as long as possible. | $1,044 |
| 3340-0920 | Bolt-in partition wall. Locate in lower rear compartment transverse area. Partition to separate R3 compartment from B1 compartment. | $159 |
| 3340-0921 | Special hose bed divider height and reinforcement for single (or first) hose bed divider. The height of the hose bed divider shall be lowered 10" over standard. The divider shall have a round reinforcement welded in place on the rear vertical and the top horizontal edges to stiffen the divider as mounted. A Divider Support to run full width of hosebed (side to side) at the front of the hosebed and be attached to the hosebed divider to provide additional support. | $479 |
| 3340-0922 | Hosebed rearward of the booster tank. Includes diamond plate tank cover engine access provision and adjustable divider extrusions. HS pumper only. | $2,385 |
| 3340-0923 | Speedy Dry Hopper. Locate in roof compartment above R3. Includes discharge thru bottom of compartment R4 along forward compartment wall with valve for ground level dispensing. Capacity of speedy hopper is 100 lbs. | $1,405 |
| 3340-0924 | Aluminum angle 2"x2" bolt on light guard to protect ROM light fixture and roll-up door track from damage for L4 rearward light only. (1) 18" piece at top and (1) 18" piece at the bottom bolted to the rear wall. | $117 |
| 3340-0927 | Divider long fixed at the edge of the step-down in hosebed (driver side). Divider to run full length of hose bed (front to rear). | $513 |
| 3340-0928 | Body main frame and hose bed side assemblies for a 93" high pumper body with special location side sheet on right side to lower overhead ladder rack. No upper rear crossover hand rail with this option. | $3,625 |
| 3340-0930 | Hosebed storage area (no pan) in forward area of hosebed with embossed diamond plate cover hinged forward with two grab handles and gas shock hold opens. The cover to open past 90 degree for ease of equipment loading and removal in the storage area. | $770 |
| 3340-0932 | Transverse opening in the lower section of side compartments to accommodate pass through the rear compartment. The opening will be 2" above the floor and have aluminum picture frame style trim from each compartment over lapping to enclose compartment wall breaks without a sleeve. | $2,042 |
| 3340-0938 | Provide access with covers on forward wall of compartment R3 to access to upper KLAMP-IT hardware for DOT storage bottles located in R2. | $189 |
| 3340-0943 | Transverse opening in the lower rear section of side compartments to accommodate pass through the rear compartment. The opening will be 2" above the floor and have aluminum picture frame style trim from each compartment over lapping to enclose compartment wall breaks without a sleeve. | $1,144 |
| 3340-0947 | Rolled hose rack for (3) hose rolls (1) 50' of 1.75" (1) 25' of 3" and (1) 25' of 5. Includes adjustable (4) dividers attached to roll out tray(s) in compartment(s) L1 R1. | $599 |
| 3340-0948 | The hose bed is to have the capacity for the following hose (unless otherwise specified on the approval drawing). Hose load shall be listed from driver to officer. Bed 1 1000' of 5" hose Bed 2 200' of 2-1/2" hose Bed 3 300' of 2" hose Bed 4 200' of 3" hose Bed 5 (2) areas each holding 200' of 3" hose seperated by a hinged false floor. | $619 |
| 3340-0949 | Stokes storage with stops located in the drivers side upper header. Includes a lift-up rear access door (wired to door ajar) w/bent D-ring latch. | $1,731 |
| 3340-0953 | Rub rail assembly constructed of 3" x 2" Black U.H.M.W. plastic. Bolted to the lower exterior perimeter edge of the apparatus body. Rub rail shall be mitered 45 degrees at leading and trailing end and notched for marker and warning lights clearance (where applicable). | $1,362 |
| 3340-0954 | Stainless steel rear fender panels painted job color. (Recommended for FRP paint process compatibility!) Includes bolt-on stainless steel inner wheel well liners (not painted) and rubber outer fenderettes. | $1,435 |
| 3340-0955 | Backboard storage sleeve. Locate in ladder tunnel. Rack to be approx 3''W x 18''H x 72''L. | $430 |
| 3340-0956 | Compartment R1 to be notched for vertical exhaust in back forward corner of the compartment. | $277 |
| 3340-0957 | Compartment R4 to be notched for deck gun piping in back rearward corner of the compartment. | $277 |
| 3340-0958 | Backboard storage sleeve for (2) boards individually stored one on top of the other. Each area to be 3"W x 17"H x 72"L. Includes (1) retaining strap on the driver side. Location: Vertically mounted in L1 and into R1 (no access this side) inboard of the vertical exhaust. | $707 |

| Item No. | Description | |
|---|---|---|
| 3340-0959 | One (1) Vertical mount traffic cone holder shall be fabricated and installed to hold up to (8) 28" tall traffic cones with 12" bases (not included). The bracket shall be constructed of 1/8" aluminum smooth plate bolted and mounted to the left rear panel step bumperette inboard of the tail light assembly. | $277 |
| 3340-0960 | Body main frame and hose bed side assemblies for a 90" high pumper body. | $4,260 |
| 3340-0961 | Divider long fixed at the edge of the step-down in hosebed (officer side) to be "L" shaped. Divider to run full length of hose bed (front to rear). | $513 |
| 3340-0962 | Body main frame and hose bed side assemblies for a 97 in. high body. | $4,132 |
| 3340-0963 | Hosebed storage pan smooth plate painted black Durabak. Locate in forward area of hosebed. | $963 |
| 3340-0964 | Storage pan over eMAX transverse storage area(s) to be smooth plate painted black Durabak. | $576 |
| 3340-0969 | Divider Reinforcement. To run full length of hose bed divider on top surface (front to rear). 3/4" extruded aluminum tubing welded to divider. Price per each divider. | $332 |
| 3340-0971 | Stainless steel tag on wheel well area above each tire location. Tag to be engraved silver with black lettering and specify pressure torque and size of each tire. | $218 |
| 3340-0975 | Smooth plate painted tandem axle wheel well. Includes bolt-on composite wheel well liners and bolt-on polished alum fenderettes. | $3,187 |
| 3340-0976 | Horizontal air bag module for four (4) customer furnished air bags. Bags will be Paratech Maxiforce brand and each bag will store with two (2) identical pieces of 3/4" plywood. Nylon buckle strap assembly shall be provided across the openings. Locate on floor of compartment L2. See specifications for details. | $1,245 |
| 3340-0978 | Body mainframe and hosebed side assemblies for a 104" high body. | $5,826 |
| 3340-0979 | Smooth plate single axle wheel well painted black Durabak. Includes bolt-on composite wheel well liners and bolt-on polished alum fenderettes. | $1,575 |
| 3340-0981 | Divider Support to run full width of hosebed (side to side) at the front of the hosebed and towards the rear of the hosebed at top of the divider(s). Attach to each hosebed divider to provide additional support. The rear divider support to be located as far rearward as available space on upper rear hose bed allows for support mounting. | $390 |
| 3340-0983 | All body and pump module compartments (if applicable) and/or storage areas (EXCEPT R1 compartment) to have no louvers or vents. Louvers or vents for compartment R1 are to located up high only. | $277 |
| 3340-0984 | Special Driver side hose bed walkway. Embossed diamond plate walkway driver side over driver side compartments to run full length of the body. Walkway to have drains with drain tubes that extend to the bottom of the vehicle. | $645 |
| 3340-0985 | Attic Ladder / Pike Pole cover to be located in compartment R1. Includes compartment wall cut-outs. | $180 |
| 3340-0991 | Backboard storage sleeve. Locate within RS hose bed cover underneath. Sleeve to be approximately 3'' H x 20'' W x 72'' L. | $795 |
| 3340-0993 | LINE-X package for hosebed storage pan(s): Includes all surfaces of the pan visible from top of the truck. Also includes all platework fabricated at E-ONE mounted inside the pan such as hydraulic system cover generator shield reservoir cover cooler cover cord reel cover boxes dividers trays etc as applicable. | $735 |
| 3340-0994 | LINE-X package for Pumper or Tanker body (excluding eMAX) see specification for more details. | $2,253 |
| 3340-0995 | LINE-X package for under body platform(s): Includes all exterior surfaces of the pump panel operator and/or under body platform(s) as applicable. Quantity each. | $131 |
| 3340-0996 | LINE-X package for eMAX Pumper see specification for details. | $3,749 |
| 3340-0997 | Horizontal fixedl shelf. Shelf to seperate upper hose from lower hose. | $562 |
| 3340-0998 | Body mainframe and hosebed side assemblies for a 101" high body. | $5,104 |
| 3340-0999 | Push button latches to match side pump panel latch. Locate Top Mount pump panel | $195 |
| 3340-1000 | Cast Products FG4102-1-250-N (hinge right) recessed fuel fill with door. Recessed fuel fill driver side wheel well. | $135 |
| 3340-1003 | Storage pan over eMAX Rescue module. | $1,877 |
| 3340-1009 | The L3 Upper Compartment shall include Unistrut for dealer/customer supplied equipment. Two (2) full width horizontal lengths shall be attached to the upper back wall of the compartment. Top strut shall be located approx 14" down from compt opening. Second strut shall be located 12" below the upper measured center to center. | $260 |
| 3340-1010 | Notched hosebed divider(s). Notch to be in center approximately 25" up from hose bed floor and angle up 45 degrees at each end. Priced per divider. | $87 |
| 3340-1011 | Special hose bed divider reinforcement. Each divider shall have 3/4" extruded aluminum tubing reinforcement welded in place on the forward and rear vertical edges and the top horizontal edges to stiffen the dividers as mounted. Price per divider. | $332 |
| 3340-1012 | One (1) divider support(s) to attach to each top rear edge of each hose bed divider to provide additional support. SS product only. Price each. | $59 |
| 3340-1013 | The ladder compartment door shall be equipped with a hold open device. | $122 |
| 3340-1017 | LINE-X package for Tandem Axle Aerial see specification for details. | $8,341 |
| 3340-1018 | LINE-X package for body fenderettes. | $229 |

| Item No. | Description | |
|---|---|---|
| 3340-1022 | Storage pan over eMAX transverse storage area to be deleted and a solid tread panel top added. | $356 |
| 3340-1026 | Driver and officer side compartment top to be embossed diamond plate IPO standard. | $731 |
| 3340-1030 | Recessed switch enclosure with hinged stainless steel door with lift and turn latch. Located on the right rear body panel to protect the power hose bed cover switches. | $256 |
| 3340-1038 | Roof top compartment Interiors to have Zolatone black finish. | $1,974 |
| 3340-1039 | Diamond plate tandem axle wheel well. Includes bolt-on composite wheel well liners and bolt-on rubber trim fenderettes. | $1,973 |
| 3340-1040 | Body compartment Interiors and compartment mounted components (shelves trays toolboardsetc.) to have gray Scorpion polyurethane coating. To include pan of hinged doors and tool compartments (as applicable). Does not include floors if they are dia plt. | $13,452 |
| 3340-1043 | Hosebed above the booster tank. Hosebed assembly to be designed with short divider(s) held forward 20". Hosebed adjustable divider extrusion rearward to run full width of the hosebed. | $2,237 |
| 3340-1044 | Body mainframe and hosebed side assemblies for a 93" high body. | $3,156 |
| 3340-1045 | Speedy Dry Hopper. Locate in roof compartment above forwardmost driver side compartment. Includes discharge through bottom of compartment along forward wall with valve for ground level dispensing. Pipe to be fully boxed in with a vertical partition running the full height and depth of the comaprtment and completly enclosed at the front as wide as necessary so the pipe is not visiable. Capacity of speedy hopper is 100 lbs. | $1,627 |
| 3340-1049 | Stainless Steel corner guards for the driver and officer rear compartment face. Guards to wrap around the corner and be full height of side assembly. | $282 |
| 3340-1051 | Diamond plate box for directional lightbar and (2) GH scene lights. Box to be mounted at rear of hosebed. Lights to be surface mounted to box. | $585 |
| 3340-1052 | Body mainframe and hosebed side assemblies Low Profile for a 85" high Tanker style body with OAH issue. | $2,430 |
| 3340-1054 | Sign plate smooth plate with sanded finish 30" x 30" mounted on forward body roof. | $244 |
| 3340-1057 | Modified hose bed divider height and reinforcement. The height of the hose bed divider (s) to extend up over body height 2 inches with tapered forward end at front of hose bed and rounded rear end. Divider (s) shall have a split round reinforcement welded in place on the forward and rear vertical edges and the top horizontal edges to stiffen the divider (s) as mounted and to provide a rounded edge where raised divider (s) will contact hose bed nylon cover in transit to reduce chaffing. Added per each divider as equipped. | $156 |
| 3340-1062 | Body main frame and 70" wide hose bed for an 90" high body with low hose bed and "L" shape tank. Hose bed is 40" from top of tailboard to bottom of hose bed. | $2,398 |
| 3340-1063 | Rub rail assemblies constructed of 2.5" x 2" Black U.H.M.W. plastic. The first rub rail shall be bolted to the lower exterior edge of the apparatus body below the compartment doors. The second rub rail shall be mounted above the compartment doors on both sides of the body from front to back. The third rub rail shall be mounted just below the compartment tops on both sides of the body from front to back. | $2,501 |
| 3340-1064 | LINE-X Package: Body compartment Interiors and compartment mounted components (shelves trays toolboardsetc.) to have LINE-X finish. To include pan of hinged doors and tool compartments (as applicable). Includes diamond plate floors and E-ONE style wheel well SCBA compartments if applicable. Package does not include roof top compartment interior. | $17,384 |
| 3340-1065 | LINE-X package for Pumper or Tanker body stepping surfaces see specification for more details. | $752 |
| 3340-1066 | The storage box(es) shall have LINE-X finish both inside and outside. | $612 |
| 3340-1067 | LINE-X Package: Body compartment Interiors shall have LINE-X finish. Package does not include roof top compartment interior. | $8,195 |
| 3340-1068 | Smooth plate tandem axle wheel well painted job color. Includes bolt-on composite wheel well liners and bolt-on alum fenderettes painted Durabak black. Wheel well plates to be flush mounted. | $5,749 |
| 3340-1070 | LINE-X package for Rescue catwalk area on top of the body. Includes floor surfaces of catwalk and forward pan area. | $1,874 |
| 3340-1079 | Slip-on stainless steel dump elbow and 36" straight extension chute. Includes body mounted removable support arm and mounting brackets at rear of body for straight chute and in dunnage pan for elbow. | $1,910 |
| 3340-1081 | Two (2) short dividers to run from foward hosebed wall front of fill tower to create a storage area. Wetside Tanker Only. | $772 |
| 3340-1090 | Diamond plate single axle wheel well. Includes bolt-on aluminum wheel well liners sanded finish and bolt-on polished aluminum fenderettes. | $1,563 |
| 3340-1091 | Durabak package for Tandem Axle Aerial see specification for details. | $8,341 |
| 3340-1092 | Install a stainless steel 2" high flange full width of the door opening on the floor of compartment L2. | $44 |
| 3340-1094 | Over the hose bed swing-out bracket for rear lighting accessories. Height not to exceed highest point on rear body. Swing bracket located on inside of hose bed side sheet. to reduce OAH of installation. Constructed of aluminum extrusion/tubing with alumium plate end brackets. Paint job color. | $1,202 |

| Item No. | Description | |
|---|---|---|
| 3340-1095 | Brushed stainless steel scuff plate for folding or formed step. (ea.) Locate per step on painted surface to protect paint from boot contact while climbing. Position on body module walkover or as applicable where folding or formed steps are optioned on apparatus. Not to be used where painted surface is coated with Line-X or similar anti scuff coatings. | $29 |
| 3340-1096 | Full width hose bed above the booster tank from the officer side hose bed at ladder rack Urban notch to the driver side with raised side assemblies. | $1,861 |
| 3340-1098 | Hose bed walkway offset to officer side. Non-slip diamond plate walkway to run full length of hose bed. | $482 |
| 3340-1099 | Stainless steel light guards on the strip lights in body compartments. Price per compartment fixture. | $57 |
| 3340-1102 | Durabak package for hosebed storage pan(s): Includes all surfaces of the pan visible from top of the truck. Also includes all platework fabricated at E-ONE mounted inside the pan such as hydraulic system cover generator shield reservoir cover cooler cover cord reel cover boxes dividers trays etc as applicable. | $735 |
| 3340-1103 | Durabak package for Pumper or Tanker body (excluding eMAX) see specification for more details. | $2,253 |
| 3340-1104 | Durabak package for body fenderettes. | $229 |
| 3340-1105 | Durabak package for body interior door panels. Location(s): [#LOC]. | $229 |
| 3340-1107 | Front of hose bed stainless steel transverse storage divider for selected accessory such as a generator hose reel and fill towers. Located in forward area of 72" wide hose bed to separate the storage area from the main hose storage area. Applicable main hose bed dividers will be located rearward of the transverse divider. | $516 |
| 3340-1119 | Rivet in place stainless steel trim on bottom edge of compartment opening. Option quantity is each. Option does not include stainless steel trim. | $52 |
| 3340-1123 | Underbody full width mudflap mounted to body. Includes white reflective "STAY BACK 300 FEET" lettering. Locate at rear of body ahead of staircase. Bottom of flap to be approx 12" off ground. | $784 |
| 3340-1125 | All body walkway and speedlay compartments (if applicable) and/or storage areas (EXCEPT R3 compartment) to have no louvers or vents. Louvers for compartment R3 are to located only on the rear and back walls. | $277 |
| 3340-1127 | Roof top compartment Interiors to have Zolatone black finish. | $1,974 |
| 3340-1129 | Underbody UltraGuard splash guard behind rear axle mounted to body at rear step area. Guard to be modified to include cutouts for rear tow eyes and rear hitch receiver (If applicable). | $667 |
| 3340-1131 | Storage for Fire Department supplied ALS gear in a shelving style pigeon hole horizontal fashion to closely match existing Chicago units in compartment L3 and lower B1. Module constructed of 1/8" smooth aluminum plate. | $2,387 |
| 3340-1132 | Stainless steel rear fender panels with aluminum treadplate overlays IPO painted finish. Includes bolt-on stainless steel wheel well liners (not painted) and rubber outer fenderettes. | $1,183 |
| 3340-1133 | Cargo net. Black Nylon cargo net with 2x2 openings shall be provided inside body compartment for area below transverse style extended floor [#LOC]. Cargo net to be permanently fastened to bottom of transverse compartment style extended floor and secured in place at bottom and sides with twist-locks snaps and Velcro straps as deemed required by E-1 engineering to adequately secure cargo in place. | $694 |
| 3340-1134 | LINE-X package for Wetside body: All visible diamond plate surfaces shall be coated with LINE-X finish. See specification for more details. | $2,253 |
| 3340-1143 | Body main frame and hose bed side assemblies for a 90" high pumper body with a 72" wide low hose bed. | $2,485 |
| 3340-1145 | Removable aluminum hose bed storage tray (EA) installed at the top rear of bed 1 at the center of the body. Tray shall include manual release assembly to lock tray in place. The floor of the tray(s) to be slotted to prevent the accumulation of water and allow for ventilation of wet hose. UHMW strips on the bottom rails to assist in installation/removal of tray. | $720 |
| 3340-1147 | Bolt-on diamond plate 24" tailboard (full width of body) ILO a standard tailboard. Includes (2) slanted beavertails (no stanchions) with removable outer panels and handrails - (2) vertical on trailing edge of beavertails. Wetside Tanker Only. | $1,281 |
| 3340-1148 | Divider Support to run full width of hosebed (side to side) at the front of the hosebed divider(s). Attach to each hosebed divider to provide additional support. | $303 |
| 3340-1149 | Stainless Steel corner guard for the officer rear 3x3 to protect the paint from the pike poles.. Guard to wrap around the 3x3. | $142 |
| 3340-1152 | The upper right sight side of the body shall include an integral drip edge formed into the compartment top trim assembly. Trim shall be formed at a 30 degree angle. The upper side of the body shall include a full length FRP panel without exposed seams. The seams will be positioned behind the upper side warning lights. The warning lights shall be trimmed with a 14" x 14" mirror polished stainless steel trim panels. | $155 |
| 3340-1159 | Bolt-in partition. Locate: R4 23 inches from aft compartment wall and span from compartment floor to bottom of permanent shelf located 20 inches above floor mounted generator tray. | $244 |
| 3340-1163 | Compartment heater. Includes switch on driver overhead. Location: [#LOC]. | $1,244 |

| Item No. | Description | |
|---|---|---|
| 3340-1164 | The upper top sides of the body shall include an integral drip edge formed into the compartment top trim assembly. Trim shall be formed at a 30 degree angle. | $127 |
| 3340-1165 | Body main frame and 96" wide hose bed for an 83" high body with low hose bed and "L" shaped water tank. | $1,658 |
| 3340-1166 | Rub rail assemblies constructed of 2.5" x 2" Black U.H.M.W. plastic. Bolt to the lower exterior edge of the apparatus body below the side of body compartment doors. | $1,034 |
| 3340-1167 | Stainless steel trim on edges of compartment openings; vertical edge of L1 and R1 opposite the hinges and the vertical edges of L2 and R2 | $511 |
| 3340-1168 | Brushed stainless steel rear fender panels. Includes bolt-on stainless steel inner wheel well liners (not painted) and rubber fenderettes. | $1,908 |
| 3340-1169 | Body main frame and 59" wide hose bed side assemblies for a 90" high pumper body. | $2,988 |
| 3340-1171 | Rub rail assemblies constructed of 2.5" x 2" Black U.H.M.W. plastic. The first rub rail shall be bolted to the lower exterior edge of the apparatus body below the compartment doors. The second rub rail shall be mounted above the compartment doors on both sides of the body from front to back. | $1,932 |
| 3340-1177 | Body main frame and hose bed side assemblies for a 88" high rescue pumper body with a 72" wide hose bed and a special location side sheet on right side to lower overhead ladder rack. No upper rear crossover hand rail with this option. | $3,625 |
| 3340-1179 | Flooring plate additional in R2 compartment. 3/16" aluminum smooth plate to be bolted in place 1/2" above standard diamond plate compartment floor. | $82 |
| 3340-1180 | Notch the ceiling of the [#LOC] compartment and add a cap to raise the ceiling height. | $286 |
| 3340-1186 | LINE-X package for under body platform(s): Includes all exterior surfaces of the pump panel operator and/or under body platform(s) as applicable. Quantity each. | $238 |
| 3340-1188 | Cast Products recessed fuel fill with door in driver side wheel well. | $135 |
| 3340-1189 | Nylatron bolt-on overlay for compartment floor (full width/full depth). Includes 45 degree beveled edge to outside and .187" smooth plate aluminum beneath Nylatron floor with fasteners countersunk. Location: [#LOC]. | $551 |
| 3340-1193 | There shall be 12 gauge stainless steel smooth plate floor above the horizontal hard suction storage racks in the drivers roof top compartments to provide additional storage. | $979 |
| 3340-1194 | The rear of the outer (2) hose bed dividers to be cut back 6". An additional adjustable track will be installed at the rear of the hose bed to secure these dividers. | $261 |
| 3340-1198 | Bolt-in partition wall. Locate in lower rearward side compartment in order to divide the compartment storage area from the cord reel and/or other permenently mounted equipment in the forward or rearward area of the compartment. | $123 |
| 3340-1208 | Body main frame and hose bed for a 95" high stainless steel eMAX rescue pumper body. Hose bed to be 46" wide. | $4,447 |
| 3340-1211 | Front of hose bed stainless steel partial storage divider on driver side for additional storage. Located in forward area of hose bed at end of hard suction storage assembly to separate the storage area from the main hose storage area. Applicable main hose bed dividers will be located rearward of the partial divider. | $434 |
| 3340-1212 | The following items to be sanded smooth plate painted with gray Scorpion coating in place of standard diamond plate: Aluminum hose bed covers.The coating shall be tinted to match the upper body color and have a flat (not glossy) slip resistant finish. | $1,592 |
| 3340-1213 | Rear compartment protruding through rear side compartment. Includes hinged door (to match rear body finish) with D-Ring latch. Door Ajar included. | $555 |
| 3340-1214 | Aluminum diamond plate trim on bottom and side edges of speedlay openings. | $393 |
| 3340-1216 | Body mainframe and hosebed side assemblies for a 102" high body. | $5,251 |
| 3340-1217 | Cast products AD0003-1 switch box assembly with polished flange 120 grit directional finish on lid and concealed hardware and hinges mounted on the rear body. | $201 |
| 3340-1220 | Speedy Dry Hopper. Locate in roof compartment above L4. Includes discharge thru bottom of compartment L4 along forward compartment wall with valve for ground level dispensing. Capacity of speedy hopper is 100 lbs. | $1,405 |
| 3340-1225 | Diamond plate single axle wheel well. Includes bolt-on composite wheel well liners and bolt-on rubber trim fenderettes. | $1,021 |
| 3340-1227 | Speedy Dry Hopper. Locate [#LOC]. The hopper shall have a discharge chute with a shut-off valve that extends down into the interior compartment directly below the roof compartment. with an extension hose for ground level dispensing . Capacity of speedy hopper is 25 lbs. | $1,224 |
| 3340-1229 | Smooth plate single axle wheel well painted job color. Includes bolt-on aluminum wheel well liners painted Job Color and bolt-on polished aluminum fenderettes. | $1,785 |
| 3340-1234 | Nylon black cargo net in interior compartment opening behind door(s) of upper [#LOC]. Cargo net to be mechanically attached at compartment offest and bungee cords in the top corners. | $565 |
| 3340-1237 | Enclosure to box-in the CAFS components and thereby provide an obstruction free usable space in the remainder of the compartment. Locate: [#LOC] | $238 |

| Item No. | Description | |
|---|---|---|
| 3340-1238 | Sleeve through the driver side compartment into the rear compartment to accomodate Little Giant Model 17 ladder on its beam recessed as much as possible. Includes a strap to secure the ladder and appropriate spacer/stop. Bolt on vertical partition in front of the sleeve full width and full height of the rear compartment to seperate the usable compartment space. | $696 |
| 3340-1240 | Aluminum diamond plate overlays on both sides of the pump module to extend from the top of the pump panel or as applicable to surround openings down to running boards. Overlay shall surround the openings for the speed lay(s) and or tool compartments in the forward area of the pump module and shall be positioned to protect the module surface during tool or hose deployment. | $710 |
| 3340-1242 | Hosebed tray - removable. Tray includes a 1.25" extruded alum handle low on each end of tray and slots down each side to facilitate lifting. The floor of the tray shall have poly slides and be slotted to prevent the accumulation of water and allow for ventilation of wet hose. | $611 |
| 3340-1243 | Backboard storage sleeve. Locate within RS hose bed cover underneath. Sleeve to be approximately 5'' H x 20'' W x 72'' L. Rear of storage sleeve to have a horizontal hinged door with push button latches and mounting for notched rear hosebed cover flap. | $867 |
| 3340-1244 | Flooring plate additional in [#LOC] compartment. 3/16" aluminum smooth plate to be bolted in place 1/2" above standard diamond plate compartment floor. | $162 |
| 3340-1245 | Flooring plate additional in R2 compartment. The 3/16" aluminum smooth plate to be bolted in place 1/2" above standard diamond plate compartment floor and shall be 30" wide x deep as possible offset rearward. | $162 |
| 3340-1248 | One (1) Vertical mount traffic cone holder shall be fabricated and installed to hold up to (8) 28" tall traffic cones with 12" bases (not included). The bracket shall be constructed of 1/8" aluminum smooth plate bolted and mounted to the right rear panel step bumperette inboard of the tail light assembly. | $277 |
| 3340-1253 | LINE-X Package: Specified Body compartment interior and compartment mounted components (shelves trays toolboardsetc.) to have LINE-X finish. To include pan of hinged doors if applicable. Compartment interior includes floor back and side walls and ceiling as applicable. Location(s): [#LOC]. | $2,484 |
| 3340-1258 | Body main frame and 72" wide hose bed for a 93" high rescue pumper body. | $2,687 |
| 3340-1259 | The spacer plates between the cab and body shall be coated with LINE-X. | $238 |
| 3340-1265 | One (1) Vertical mount traffic cone holder shall be fabricated and installed to hold up to (8) 28" tall traffic cones with 12" bases (not included). The bracket shall be constructed of 1/8" aluminum smooth plate bolted and mounted to the right rear panel step inboard of the tail light assembly. Note; this may extend the OAL of the vehicle depending upon the depth of the selected rear step. | $277 |
| 3340-1271 | Cover heater. Cover to be aluminum. Finish to match compartment interior. Location: [#LOC]. | $95 |
| 3340-1273 | Diamond plate corner guard shall extend from inside the wall of the hosebed. | $298 |
| 3340-1275 | Enhanced extended compartment located [#LOC]. Includes hinged door (to match rear body finish) with D-Ring latch. Door Ajar included. Requires enhanced extended body compartmentation (selected separately). This option reduces the depth of rear side compartments. | $400 |
| 3340-1282 | Stainless steel trim along sides and top edge of each fuel fill opening on driver side of body. | $176 |
| 3340-1283 | Speedy Dry Hopper. Locate in roof compartment above L4. Includes discharge thru bottom of compartment L4 along rearward compartment wall with valve for ground level dispensing. Capacity of speedy hopper is 100 lbs. | $1,405 |
| 3340-1284 | Swirl plate corner guards for the driver and officer front compartment face. Guards to wrap around the corner and be full height of side assembly or to a max of 96". | $437 |
| 3350-0000 | Hydraulic hose reel for use with Hurst brand tools. Includes 100' 1/4" Parker Polyflex hose (up to 5000 PSI) and rollers (captive type). Location: [#LOC]. Hose Color: [#COL]. | $2,523 |
| 3350-0001 | Air Reel w/electric rewind. 12V with 100' 1/4 in. hose plumbed to the truck air system (unless otherwise specified). Location: [#LOC]. | $2,773 |
| 3350-0002 | Low Pressure Utility Air Hose Reel assembly with 175' 3/8 in. low pressure air hose and mini panel. Locate in [#LOC]. | $2,523 |
| 3350-0004 | Reel Air. Low Pressure Utility Air Hose Reel assembly (Includes Rollers) with 250' 3/8 in. low pressure air hose. Includes mini panel located in compartment below reel. Located in [#LOC]. | $2,661 |
| 3350-0009 | Hydraulic hose reel for use with TNT brand tools. Includes 100' 1/4" Parker Polyflex hose (up to 10500 PSI) and rollers (captive type). Location: [#LOC]. Hose Color [#COL]. | $5,068 |
| 3350-0010 | Hydraulic hose reel for use with Phoenix brand tools. Includes 100' 1/4" Parker Polyflex hose (up to 5000 PSI) and rollers (captive type). Location: [#LOC]. Hose Color [#COL]. | $2,523 |
| 3350-0011 | Hydraulic hose reel for use with Code 3 brand tools. Includes 100' 1/4" Parker Polyflex hose (up to 5000 PSI) and rollers (captive type). Location: [#LOC]. Hose Color [#COL]. | $2,523 |
| 3350-0012 | Hydraulic hose reel for use with Amkus brand tools. Includes 100' 1/4" Parker Polyflex hose (up to 10500 PSI) and rollers (captive type). Location: [#LOC]. Hose Color: [#COL]. | $5,068 |
| 3350-0013 | Hydraulic hose reel for use with Hurst Centaur brand tools. Includes 100' 1/4" Parker Polyflex hose (up to 10000 PSI) and rollers (captive type). Location: [#LOC]. Hose Color [#COL]. | $5,068 |

| Item No. | Description | |
|---|---|---|
| 3350-0014 | Hydraulic hose reel for use with Genesis brand tools. Includes 100' 1/4" Parker Polyflex hose (up to 10000 PSI) and rollers (captive type). Location: [#LOC]. Hose Color [#COL]. | $5,068 |
| 3350-0015 | Hydraulic hose reel for use with Holmatro brand tools. Includes 100' 1/4" Parker Polyflex hose (up to 10000 PSI) and rollers (captive type). Location: [#LOC]. Hose Color [#COL]. | $5,068 |
| 3350-0016 | 12' Lead/Supply Line for high pressure hydraulic reel. To be used with 10000 PSI hyd reels. Locate on reel in [#LOC]. | $863 |
| 3350-0017 | 30' Lead/Supply Line for high pressure hydraulic reel. To be used with 10500 PSI hyd reels. Locate [#LOC]. | $1,283 |
| 3350-0018 | 12' Lead/Supply Line for low pressure hydraulic reel. To be used with 5000 PSI hyd reels. Locate [#LOC]. | $691 |
| 3350-0019 | 30' Lead/Supply Line for low pressure hydraulic reel. To be used with 5000 PSI hyd reels. Locate [#LOC]. | $1,086 |
| 3350-0024 | Dual hydraulic reel rollers mounted thru bolt-on bracket. Location(s): [#LOC]. | $508 |
| 3350-0025 | Hydraulic hose reel for use with TNT brand tools. Includes 100' 1/4" synthetic rubber hose (up to 10500 PSI) and rollers (captive type). Location: [#LOC]. Hose Color [#COL]. | $5,068 |
| 3350-0026 | Hydraulic hose reel for use with Amkus brand tools. Includes 100' 1/4" rubber hose (up to 10500 PSI) and rollers (captive type). Location: [#LOC]. Hose Color: [#COL]. | $5,068 |
| 3350-0028 | Raceway for 12' Lead/Supply Line between the B1 and L3 compartments. | $352 |
| 3350-0029 | Route hydraulic lead line(s) to [#LOC]. | $103 |
| 3350-0030 | Low pressure utility air hose reel w/spring rewind. Includes 50' 3/8" low pressure air hose rollers ball stop and and shut-off valve accessible from ground. Loc: [#LOC]. | $1,397 |
| 3350-0032 | Akron utility air hose reel. Includes 200' 3/8" hose and reel mounted rollers (captive type). Loc: [#LOC]. | $1,483 |
| 3350-0033 | Akron hydraulic hose reel for use with Hurst brand tools. Includes 100' 1/4" Parker Polyflex hose (up to 5000 PSI) and rollers (captive type). Location: [#LOC]. Hose Color: [#COL]. | $2,345 |
| 3350-0034 | Hydraulic hose reel for use with Holmatro Core Technology tools. Reel model EF2220-17-18 w/ 100' of CORE hydraulic hose and a 30' CORE Holmatro pigtail. Location: [#LOC]. Hose Color [#COL]. | $8,028 |
| 3350-0036 | Hydraulic hose reel for use with Hurst Centaur brand tools. Includes 150' 1/4" Parker Polyflex hose (up to 10000 PSI) and rollers (captive type). Location [#LOC]. Hose Color [#COL]. | $6,170 |
| 3350-0040 | 12' Lead/Supply Line for high pressure hydraulic reel. To be used with 10500 PSI hyd reels. Locate on reel in [#LOC]. | $906 |
| 3350-0041 | 30' Lead/Supply Line for high pressure hydraulic reel. To be used with 10500 PSI hyd reels. Locate [#LOC]. | $1,346 |
| 3350-0042 | Triple Hose Lead/Supply Line for TNT Reels. (1) 30' Lead/Supply Line for high pressure hydraulic reel. Locate officer side front bumper. Hose Color Blue. (2) 12' Lead/Supply Line for high pressure hydraulic reel. driver forward roof compartment (above L1 forward). Hose Color (1) Red and (1) Yellow. To be used with 10000 PSI hyd reels. | $4,226 |
| 3350-0043 | Akron hydraulic hose reel for use with Amkus brand tools. Includes 100' 1/4" Parker Polyflex hose (up to 10500 PSI) and rollers (captive type). Location: [#LOC]. Hose Color: [#COL]. | $3,617 |
| 3350-0045 | Akron reel to be powder painted custom color. Requires approval from vendor on color. Location: [#LOC]. Reel Color: [#COL]. | $128 |
| 3350-0046 | 8' Lead/Supply Line for high pressure hydraulic reel. To be used with hyrdraulic reels between 10000 to 10500 PSI. Locate: [#LOC]. | $420 |
| 3350-0047 | 6' Lead/Supply Line for high pressure hydraulic reel. To be used with 10500 PSI hyd reels. Locate on reel in [#LOC]. | $852 |
| 3350-0048 | Low Pressure Utility Air Hose Reel assembly with 250' 3/8 in. low pressure air hose. Locate in [#LOC]. | $1,999 |
| 3350-0049 | Streamline fittings for Hurst reels and tools. This covers 3 hose to lead connections and 6 tool to reel connections. | $3,379 |
| 3350-0050 | Dual hydraulic reel rewind switch panel. Includes mounting rewind switches towards center of bracket. Location: mounted between B1 hydraulic reels. | $261 |
| 3350-0051 | Nexus couplings with swivels main reel hose only. Lead-ins to use standard TNT couplers. | $1,172 |
| 3350-0052 | 6' Lead/Supply Line for high pressure hydraulic reel. To be used with 10000 PSI hyd reels. Locate on reel in [#LOC]. | $830 |
| 3350-0053 | 40' Lead/Supply Line for low pressure hydraulic reel. To be used with 5000 PSI hyd reels. Locate [#LOC]. | $1,448 |
| 3350-0054 | Hydraulic hose reel with Nexus couplings with swivels for use with TNT brand tools. Includes 60' 3/8" hose (up to 10500 PSI) and rollers (captive type). Location: officer side front bumper. Hose Color: Black/Black with Blue shrink wrap every 10'. | $6,236 |
| 3350-0055 | Hydraulic hose reel with Nexus couplings with swivels for use with TNT brand tools. Includes 100' 3/8" hose (up to 10500 PSI) and rollers (captive type). Location: B1 driver side. Hose Color: Black/Black with Red shrink wrap every 10'. | $6,236 |
| 3350-0058 | Streamline fittings for Hurst reels and tools. This covers hose to lead connections and 2 tool to reel connections. | $1,128 |

| Item No. | Description | |
|---|---|---|
| 3350-0059 | 6' Lead/Supply Line for Holmatro Core hydraulic reel. To be used with Holmatro Core hyd reels. Locate on reel in [#LOC]. | $1,062 |
| 3350-0060 | Hydraulic hose reel for use with Holmatro Core Technology tools. Reel model EF2220-17-18 w/ 100' of CORE hydraulic hose. Location: [#LOC]. Hose Color [#COL]. | $6,070 |
| 3350-0061 | A set of hydraulic ports will be located in the front bumper and B1 compartment for use with Hurst Brand tools. Ports should have quick disconnects be colored black so a lead may be plugged directly into them. Locate on driver side of front bumper and B1 driver side up high (approximately 4" below and 2 " rearward of roll up door spool). Includes 30' Lead/Supply Line to be used with 5000 PSI hydraulic ports. The Lead/Supply Line to be routed from the driver side front bumper and B1compartment to the forward area of L1. | $1,528 |
| 3350-0062 | Hydraulic hose reel for use with Hurst brand tools. Includes rollers (captive type). Does not include hydraulic hose. Location: [#LOC]. | $1,936 |
| 3350-0063 | Low Pressure Utility Air Hose Reel assembly with 175' low pressure 1/2" air hose and mini panel. Locate in L2 offset rearward of cord reel set back 24" from compartment opening with rewind switch located next to the breaker box locate the air panel in L2 between lower air bag rack and adjustable shelves with protective shield above air panel run reel plumbing to dunnage area forward of drivers side coffin compartment for the customer installed air compressor. | $2,672 |
| 3350-0065 | Rollers and bracket captive for air reel. Roller shall be mounted through a bolt-on bracket. Includes rewind switch mounted on side wall. Location(s): [#LOC]. | $760 |
| 3350-0066 | 16' Lead/Supply Line for low pressure hydraulic reel. To be used with 5000 PSI hyd reels. Locate [#LOC]. | $733 |
| 3350-0068 | A lead line #8 5000 psi hydraulic hose line routed from IHT manifold to B2 lower rear wall. | $493 |
| 3350-0069 | Hydraulic tool ports with TNT RV-120 remote actuation vlv. Quick connect fittings on vlv to be for Phoenix brand tools. vlv with tool fittings to be located on officer side of front bumper. Includes hyd supply lines run to B1. | $1,942 |
| 3350-0072 | A lead line 5000 psi hydraulic line routed from B2 lower forward wall to dunnage pan located MAS heat exchanger | $706 |
| 3350-0073 | A return lead line 5000 psi hydraulic line routed from B2 lower forward wall to dunnage pan located generator | $706 |
| 3350-0074 | Raceway 8" x 8" (round) for hydraulic hose routing from dunnage area to chassis | $610 |
| 3350-0077 | Hydraulic hose reel for use with Amkus brand tools. Includes 150' 1/4" Parker Polyflex hose (up to 10500 PSI) and rollers (captive type). Location: [#LOC]. Hose Color: [#COL]. | $5,321 |
| 3350-0078 | Hydraulic reels to be mounted in aluminum tray with a cutout for roller assembly. A 1" lip around roller tray assembly to contain any fluids that may leak from hyd reel. Location [#LOC]. | $410 |
| 3350-0081 | Raceway for Air Lines from Driver and Officer Roof Top compartments to rearward L3 compartment for Dealer Supplied and Installed Air Fill System. Locate raceway in ceiling of L3 rearward and as far back as possible. | $610 |
| 3350-0083 | Hydraulic hose reel for use with Amkus brand tools. Includes rollers (captive type). Does not include hydraulic hose. Location: [#LOC]. | $2,241 |
| 3350-0084 | 16' Lead/Supply Line for high pressure hydraulic reel. To be used with 10500 PSI hyd reels lines are red and black in color. Compatible with Amkus tool brand. Locate on reel in [#LOC]. | $1,062 |
| 3350-0085 | 16' Lead/Supply Line for high pressure hydraulic reel. To be used with 10500 PSI hyd reels lines are yellow and black in color. Compatible with Amkus tool brand. Locate on reel in [#LOC]. | $1,062 |
| 3350-0088 | 40' Lead/Supply Line for high pressure hydraulic reel. To be used with 10500 PSI hyd reels. Locate: [#LOC]. | $1,710 |
| 3350-0089 | CMW model 6011-W3-H1 dual reel low pressure working air and hydraulic hose reel combo. Includes 100' of 300 PSI blue air hose and 100' of 10500 PSI red/black hydraulic hose compatible with Amkus tools. Located on ceiling of compartment B1 offset to officer side. | $6,721 |
| 3350-0090 | CMW model 6011 dual hydraulic hose reel for use with 10500 PSI Amkus tools. Reel SHALL NOT be supplied with hose or ball stops. Located on ceiling of compartment B1 offset to driver side. | $4,713 |
| 3350-0091 | 15' Lead/Supply Line for high pressure hydraulic reel. To be used with 10500 PSI hyd reels. Locate on reel in [#LOC]. | $992 |
| 3350-0092 | Hydraulic hose reel for use with Holmatro brand tools. Includes 60' of Core Technology hose installed (up to 10000 PSI) and rollers (captive type). Location: [#LOC]. Hose Color: [#COL]. | $4,820 |
| 3350-0098 | 45' Lead/Supply Line for low pressure hydraulic reel. To be used with 5000 PSI hyd reels. Locate [#LOC]. | $1,507 |
| 3350-0099 | Hydraulic hose reel for use with Holmatro Core Technology tools. Reel model EF2220-17-18 w/ 80' of CORE hydraulic hose. Location: [#LOC]. Hose Color [#COL]. | $5,387 |
| 3350-0100 | 31' to 40' Core Technology Lead/Supply Line for high pressure hydraulic reel. To be used with 10000 PSI hyd reels. Locate on reel in [#LOC]. | $1,776 |
| 3350-0101 | Up to 10' Core Technology Lead/Supply Line for high pressure hydraulic reel. To be used with 10000 PSI hyd reels. Locate on reel in [#LOC]. | $1,206 |
| 3350-0102 | Hydraulic reel rewind switch. Switch located [#LOC]. | $120 |
| 3350-0104 | 8' Lead/Supply Line for high pressure hydraulic reel. To be used with 10500 PSI hyd reels. Locate on reel in [#LOC]. | $817 |

| Item No. | Description | |
|---|---|---|
| 3350-0106 | Air reel w/electric rewind 100' of .375" hose. Breathing Air to plumbed to the B/A cascade system for low pressure utility air. Includes 100' 3/8" low pressure air hose rollers and ball stop (controls for reel included with breathing air system). Location: Roof top compartment abve R4 rearward. | $1,999 |
| 3350-0107 | Air reel w/electric rewind 100' of .375" hose for low pressure utility air. Dealer is responsible for plumbing air reel to the cascade system. Includes 100' 3/8" low pressure air hose rollers and ball stop. Location: L4 ceiling offset forward rearwar of cord reel. | $1,999 |
| 3350-0108 | CMW model 6011 dual hydraulic hose reels for use with 5000 PSI tools shall be provided and installed. Includes two (2) sets of 100' 1/4" twinline hose (up to 5000 PSI) hose guides and ball stops. Includes (2) 30' lead/supply lines. Location: [#LOC]. Hose Color: [#COL]. | $12,284 |
| 3350-0109 | A slide out and hinged roller assembly. Roller shall be Hannay Reels 4 way roller 2.5" opening mounted on a slide out bracket attached up high on the side walls of compartment L3. | $327 |
| 3350-0111 | Bulk Head Fittings including (2) 3' Pig Tails. Locate R3 back wall offset forward and 10" off compartment floor. | $841 |
| 3350-0115 | CMW model 6011 dual hydraulic hose reel for use with 10500 PSI TNT tools shall be provided and installed. Includes two (2) sets of 100' 1/4" twinline hose (up to 10500 PSI) hose guides and ball stops. Location: [#LOC]. Hose Color: [#COL]. | $9,838 |
| 3350-0116 | Dual hydraulic reel rollers located in back wall of center front bumper tray. | $508 |
| 3350-0117 | Captive roller assemblies for (1)cord reel and (1) air reel mounted thru bolt-on bracket. Includes mounting rewind switches adjacent to each roller for it respective reel on bracket. Locate in [#LOC]. | $887 |
| 3350-0118 | CMW model 6011 dual hydraulic hose reel for use with 10000 PSI Genesis tools shall be provided and installed. Includes two (2) sets of 100' 1/4" twinline hose (up to 10500 PSI) hose guides and ball stops. Location: [#LOC]. Hose Color: [#COL]. | $9,838 |
| 3350-0119 | Akron utility air hose reel. Capacity for 200' 3/8" hose (hose not included) and reel mounted rollers (captive type). Loc: L3 forward. | $1,229 |
| 3350-0121 | 30' Lead/Supply Line for high pressure hydraulic reel. To be used with 10000 PSI hyd reels. Locate [#LOC]. | $1,283 |
| 3350-0122 | Mounting to be provided for twin line hydraulic hose reel. Includes mounting only. Location: [#LOC]. | $494 |
| 3350-0123 | Bulk Head Fittings including (2) 5' Pig Tails. Locate R3 back wall offset forward and 10" off compartment floor. | $1,039 |
| 3350-0127 | Hydraulic hose reel for use with Genesis brand tools. Includes Genesis 100' 1/4" twinline hose with One Step coupler and rollers (captive type). Location: [#LOC]. Hose Color [#COL]. | $6,813 |
| 3350-0128 | Captive roller assemblies mounted on slideout assembly. Includes mounting rewind switches adjacent to each roller for it respective reel on slideout assembly. Locate in [#LOC]. | $447 |
| 3350-0129 | Bulk Head Fittings including (2) 5' Pig Tails. Locate R3 back wall offset rearward and 10" off compartment floor. | $1,039 |
| 3350-0131 | CMW model 6011 dual hydraulic hose reel for use with 10500 PSI Genesis tools. Reel SHALL NOT be supplied with hose or ball stops. Located [#LOC]. | $4,713 |
| 3350-0134 | Hydraulic hose reel Hannay model EF2516-17-18 for use with TNT brand tools. Includes rollers (captive type). Does not include hydraulic hose. Location: [#LOC]. | $2,465 |
| 3350-0135 | Remote actuation hydraulic valve for hydraulic tool utility (reel outlet etc). Includes TNT RV-120 valve and hydraulic supply lines run from dealer supplied tool pump/power unit to RV120 valve and from RV-120 valve to hydraulic utility (reel outlet etc). Lines between RV-120 valve and reel to have quick connect fittings. RV-120 valve location: Front Bumper. | $1,942 |
| 3350-0136 | The lead lines connecting the hydraulic tool outlet valve to the power unit shall have #6 FJIC connections on the power unit side and #6 MNPT connections on the valve side. | $49 |
| 3350-0137 | Air reel w/electric rewind 100' of .375" hose plumbed to the cascade system for low pressure utility air. Includes 100' 3/8" low pressure air hose rollers and ball stop (controls for reel included with breathing air system). Location: [#LOC]. | $1,999 |
| 3350-0138 | Upgrade hydraulic hose on a reel to Hurst brand yellow/grey with Streamline fitting (EA). | $2,686 |
| 3350-0139 | A slide out and hinged roller assembly. Roller shall be Hannay Reels 4 way roller 2.5" opening mounted on a slide out bracket attached up high on the side walls of compartment L2. | $327 |
| 3350-0140 | CMW model 6011 dual reel electric cord and hydraulic hose reel combo. Includes 100' of 10/4 yellow cord and 100' of 5000 PSI [#COL] (vendor supplied) hydraulic hose compatible with Hurst tools. Location: [#LOC]. | $8,102 |
| 3350-0142 | CMW model 6011 dual reel electric cord and hydraulic hose reel combo. Includes 100' of 10/3 black cord and 100' of 10500 PSI [#COL] (vendor supplied) hydraulic hose compatible with TNT tools. Location: [#LOC]. | $8,102 |
| 3350-0143 | Hannay dual hydraulic hose reel model TEF2516-17-18 for use with Hurst 5000psi hose. Painted graphite. Roller assemblies selected separately. Does not include hydraulic hose or lead in lines. Location: [#LOC]. | $3,184 |
| 3350-0144 | CMW model 6022 dual hydraulic hose reel for use with 10500 PSI Amkus tools shall be provided and installed. Includes two (2) sets of 200' 1/4" twinline hose (up to 10500 PSI) hose guides and ball stops. Location: [#LOC]. Hose Color: [#COL]. | $10,805 |

| Item No. | Description | |
|---|---|---|
| 3350-0145 | CMW model 6011 dual hydraulic hose reel for use with 10500 PSI Amkus tools shall be provided and installed. Includes two (2) sets of 100' 1/4" twinline hose (up to 10500 PSI) hose guides and ball stops. Location: [#LOC]. Hose Color: [#COL]. | $9,838 |
| 3350-0146 | CMW model 6011 dual hydraulic hose reel for use with 10500 PSI tools. Reel SHALL NOT be supplied with hose or ball stops. Location: [#LOC] | $4,713 |
| 3350-0147 | Hannay dual hydraulic hose reel model TEF2516-17-18 for use with TNT 10500 psi hose. Painted graphite. Roller assemblies selected separately. Does not include hydraulic hose or lead in lines. Location: [#LOC]. | $3,472 |
| 3350-0148 | Hannay dual hydraulic hose reel model TEF2516-17-18 for use with 105000psi hose. Painted graphite. Roller assemblies selected separately. Does not include hydraulic hose or lead in lines. Location: [#LOC]. | $3,472 |
| 3350-0149 | Low Pressure Utility Air Hose Reel assembly with 175' 3/8 in. low pressure air hose and mini panel shall be plumbed to the CAF system for low pressure utility air. Locate in [#LOC]. | $2,523 |
| 3360-0013 | Zico access ladder. Includes required step lights. | $1,761 |
| 3360-0050 | Divider roof compartment. Adjustable dividers shall be installed in each roof compartment. The divider shall span from front to rear and be adjustable left to right. The use of Unistrut or equal materials shall providefor adjustability as required for each divider. The divider plate shall be 3/16" smooth aluminum. Locate (1) divider in each roof top compartment. | $969 |
| 3360-0085 | Horizontal air bag module for three (3) customer furnished air bags. Bags will be Genesis brand. Locate offset rearward on floor in compartment R2. See specifications for details. | $1,072 |
| 3365-0002 | Recessed folding ladder storage compartment located [#LOC]. Compartment sized to store a 10' ladder with feet. | $579 |
| 3365-0003 | Overhead Zico storage rack to have a job color painted door. | $238 |
| 3365-0004 | (2) pike pole storage tubes. Locate inboard side of ladder rack with pike pole hooks stored in the up position. | $455 |
| 3365-0005 | Drop Down Fold-A-Tank Rack. Rack to hold [#LOC] gallon portable tank. | $1,603 |
| 3365-0010 | (3) pike pole storage tubes. Locate inboard side of rack with pike pole hooks stored in the up position. | $682 |
| 3365-0011 | Floor mounted roll-out tray. Includes 250lbs. tray capacity. Mount on [#LOC] floor. | $683 |
| 3365-0012 | Recessed folding ladder and pike pole storage compartment located [#LOC]. Compartment sized to store a 10' ladder with feet and (2) pike poles. | $908 |
| 3365-0020 | Zico electric drop-down ladder rack. Includes spacer brackets with ladder rack controller located on the officer side pump panel. | $5,128 |
| 3365-0021 | Manual Operated Aluminum Drop Down Ladder Rack. Includes (2) assist lift/lower handles and securing pins (accessable from ground) on each end.Ladder hold downs to secure (1) 2-section extension and (1) roof. | $2,416 |
| 3365-0023 | Ladder storage through tank for (1) 2-section 24' extension (1) 14' roof (1) 10' attic with feet and (2) pike poles. Reduces selected water tank capacity by approximately 250 gallons for pumpers and 300 gallons for tankers. | $2,917 |
| 3365-0024 | Ladder storage thru tank for (1) 3-section 35' extension (1) 14' roof (1) 10' attic with feet and (2) pike poles. Reduces selected water tank capacity by approximately 250 gallons for pumpers and 300 gallons for tankers. | $3,177 |
| 3365-0025 | Attic ladder mounting brackets (PR). Locate [#LOC]. | $323 |
| 3365-0026 | Zico pike pole mounting brackets (PR). Locate on top of Zico drop-down ladder rack. | $173 |
| 3365-0027 | Zico attic ladder mounting brackets (PR). Locate on top of Zico drop-down ladder rack. | $366 |
| 3365-0028 | Hard Suction Storage Rack. Driver side compartment top. Includes spring hold downs and scuff plates behind spring mounts (as applicable). | $388 |
| 3365-0029 | Hard suction storage box (pr). Stored (1) each side below "T" of tank. Includes hinged door with push-button latch. | $571 |
| 3365-0030 | Double Hard Suction Storage Rack for 10' hard suction hoses. Driver side compartment top. Includes spring hold downs with scuff plates (as applicable) | $768 |
| 3365-0031 | Hard Suction Storage Rack. Officer side in adjustable track above ladders (if applicable). Includes spring hold downs and scuff plates. | $404 |
| 3365-0032 | Hard Suction Storage Box. Stored below driver side "T" of tank. Includes hinged door with push-button latch. | $287 |
| 3365-0033 | Recessed pike pole storage compartment located [#LOC]. Compartment sized to store (2) pike poles. | $468 |
| 3365-0034 | (2) aluminum pike pole storage tubes. Locate [#LOC]. | $333 |
| 3365-0035 | Hard Suction Storage Rack. Officer side compartment top. Includes spring hold downs and scuff plates behind spring mounts (as applicable). | $388 |
| 3365-0040 | SCBA/Fire Extinguisher storage rack. Locate in [#LOC]. To hold (6) bottles- (2) wide/(3)high. Bottles to be stored angled upward in the compartment. The bottom and sides are to include ribbed rubber inserts. | $525 |
| 3365-0041 | Hard suction storage box. Located in the officer side hose bed. Includes drop down door (wired to door ajar) w/push-button latch(es) hose bed style top and nylatron flooring (no divider). Box to hold [#LOC] tube(s). | $1,644 |

| Item No. | Description | |
|---|---|---|
| 3365-0043 | Triple Hard Suction Storage Rack. Driver side compartment top. Includes spring hold downs and scuff plates behind spring mounts (as applicable). | $1,150 |
| 3365-0046 | The driver side full length tunnel to store (2) 6" x 10' hardsuction hoses. Each to be stored individually and accessed by a vertically hinged diamond plate door with a push-button latch. Door to wired to the door ajar indicator in the cab. | $588 |
| 3365-0047 | The driver side half length tunnel to store (3) backboards. Each to be stored individually with stop bracket 75" back from opening composite material on floor and accessed by a vertically hinged door at rear with a push-button latch. Door to wired to the door ajar indicator in the cab. | $632 |
| 3365-0048 | Hard Suction Storage Box. Stored below officer side "T" of tank. Includes hinged door with push-button latch. | $287 |
| 3365-0051 | Portable Tank Storage Box. Located in the officer side hosebed. Includes drop down door (wired to door ajar) w/push-button latches hosebed style top and nylatron flooring (no divider). Box to hold [#LOC] gallon portable tank. | $1,644 |
| 3365-0052 | Over the hosebed ladder rack. Includes framing (with a sanded finish) and mounting points. Ladder storage box to be center mounted with diamond plate front box. | $2,061 |
| 3365-0056 | Ladder storage thru tank for (2) 6" x 10' hardsuction hoses (2) pike poles and (1) 10' attic ladder. Provide retaining straps to hold the hardsuctions stationary when stored. Reduces selected water tank capacity by approximately 250 gallons. | $3,274 |
| 3365-0057 | The driver side full length tunnel to store (3) 6" x 10' hardsuction hoses. Each to be stored individually and accessed by a vertically hinged access door with a push-button latch. Door to wired to the door ajar indicator in the cab. | $882 |
| 3365-0058 | Recessed pike pole storage compartment located [#LOC]. Compartment sized to store (3) pike poles. | $700 |
| 3365-0059 | SCBA/Fire Extinguisher storage rack. Locate in [#LOC]. To hold (4) bottles- (2) wide/(2)high. Bottles to be stored angled upward in the compartment. The bottom and sides are to include ribbed rubber inserts. | $352 |
| 3365-0060 | Obsolete/ Used sales code 3365-0498/Ladders to be enclosed in pump compartment. Smooth plate box to enclose ladders in pump area. | $476 |
| 3365-0061 | Hard Suction Storage Racks. Driver side hose bed side with adjustable tracks. Includes spring hold downs and scuff plates behind spring mounts (as applicable). | $890 |
| 3365-0065 | (4) Hard Suction Storage Racks. Driver side hosebed side with adjustable tracks. Includes spring hold downs and scuff plates behind spring mounts (as applicable) | $1,409 |
| 3365-0070 | Recessed folding ladder and pike pole storage compartment located below officer side "T" of the tank. Compartment sized to store a 10' ladder with feet and (2) pike poles. | $1,358 |
| 3365-0071 | Ladder storage thru tank for (1) 2-section 24' extension (1) 14' roof (1) 10' attic with feet and (2) pike poles (1) 10' with d-handle and (1) 6' with d-handle. Reduces selected water tank capacity by approximately 250 gallons. | $3,207 |
| 3365-0072 | Door aluminum smooth plate with d-ring latch for thru the tank ladder tunnel. Location: B1 compartment. | $1,182 |
| 3365-0073 | (4) 6' pike pole storage tubes in the rear transverse compartment ceiling mounted. Locate for compartment L3 access with pike pole hooks stored in the down position. (1) pike pole caution tags to be provided one each side mounted inside the compartment at the offset. | $1,090 |
| 3365-0074 | SCBA/Fire Extinguisher storage rack. Locate in [#LOC]. To hold (6) bottles- (3) wide/(2)high. Bottles to be stored angled upward in the compartment. The bottom and sides are to include ribbed rubber inserts. | $525 |
| 3365-0075 | Officer side vertical storage tunnel. For use with low hose bed. Tunnel to hold: [#LOC]. Includes vertical hinged rear diamond plate door(s) with push-button latch. | $2,069 |
| 3365-0077 | (2) pike pole storage tubes. Locate outboard side of rack with pike pole hooks stored in the up position. | $455 |
| 3365-0078 | (3) pike pole storage tubes. Locate outboard side of rack with pike pole hooks stored in the up position. | $682 |
| 3365-0079 | 2-arm ladder rack on officer side. The ladder rack includes amber lights on each end to visually indicate when the rack is in motion. Restricts the top folding step (if optioned) from closing completely. Includes mounting bracket (if required matching rear compartment face or compartment wrap finish) for components mounted on rear compartment face. | $11,875 |
| 3365-0081 | 2-Arm Ladder Rack to be painted job color. | $3,061 |
| 3365-0083 | Zico pike pole mounting brackets (PR). Locate [#LOC]. | $173 |
| 3365-0085 | Zico pike pole mounting brackets with straps (PR). Locate [#LOC]. | $190 |
| 3365-0088 | Double hard suction hose storage tray. Locate on inboard side of overhead ladder rack. Includes (2) securing straps per tray. | $848 |
| 3365-0090 | Officer side half length vertical storage tunnel. For use with low hosebed. Tunnel to hold: (2) backboards (1) AEL 12' 2-section ladder (1) 4' D-handled pike pole (1) 8' pike pole and (1) 6' pike pole. Includes vertically hinged rear diamond plate door with push-button latch. Pike poles to be located down low in tunnel with backboards and ladder located above. | $1,555 |

| Item No. | Description | |
|---|---|---|
| 3365-0091 | Recessed folding ladder storage compartment located officer side just below hosebed. Compartment sized to store a 10' ladder with feet. | $691 |
| 3365-0092 | (2) pike pole storage tubes. Locate in driver side roof top compartment with pike pole hooks stored in the up position. | $455 |
| 3365-0094 | Storage tunnel access (contents to be noted). Includes vertically hinged door (to match material of pump access door) with push-button latch(s) and wired to door ajar indicator. Door to [#LOC] of the body/water tank. | $318 |
| 3365-0095 | Rear mount beside tank storage tunnel contents. Includes brackets capable of securing (1) two section (1) roof (1) 10' attic with feet and (2) pike pole tubes. | $2,640 |
| 3365-0096 | Zico Hydraulic Drop Down Ladder Rack. Includes diamond plate spacer brackets with ladder rack controller located on the officer side pump panel. | $6,696 |
| 3365-0097 | 12' Hard suction hose storage tray. Locate on inboard side of overhead ladder rack. Includes (2) securing straps. | $531 |
| 3365-0098 | 12' Hard Suction Storage Rack. Driver side compartment top. Includes spring hold downs and scuff plates behind spring mounts (as applicable) | $580 |
| 3365-0099 | SCBA/Fire Extinguisher storage rack. Locate in R1 mounted to lower ceiling below compartment offset. To hold (4) bottles to be stored angled upward in the compartment. The bottom and sides are to include ribbed rubber inserts. Each storage slot to be 11" wide x 11" high. | $1,819 |
| 3365-0100 | Hard Suction Storage Rack. Officer side compartment top. Includes spring hold downs and scuff plates behind spring mounts (as applicable). Rack to hold 5' hard suction. | $266 |
| 3365-0101 | Officer side vertical storage tunnel. For use with low hosebed. Lower section of tunnel to hold: 2-Section 24' 14' roof 10' attic and (2) pike poles. Upper section of tunnel to hold: 2-Section AEL-10 attic ladder and (1) 300' of 1.75" DJ hose. Upper section includes ladder stop 90" back from opening and bolt-in divider between ladder and hose storages. Includes vertically hinged rear diamond plate door(s) with push-button latch(es). The diamond compartment top of tunnel to be hinged for access to dry lay of hose. | $3,291 |
| 3365-0102 | SCBA/Fire Extinguisher storage rack. Locate in [#LOC]. To hold (4) bottles- (4)wide/(1)high. Bottles to be stored angled upward in the compartment. The bottom and sides are to include ribbed rubber inserts. | $352 |
| 3365-0103 | SCBA/Fire Extinguisher storage rack. Locate in [#LOC]. To hold (6) bottles- (6)wide/(1)high. Bottles to be stored angled upward in the compartment. The bottom and sides are to include ribbed rubber inserts. | $525 |
| 3365-0104 | Double hard suction hose storage tray. Locate (1) each side on inboard side of overhead ladder rack(s). Includes (2) securing straps per tray. For use with 13' hard suction hoses. | $2,325 |
| 3365-0107 | SCBA/Fire Extinguisher storage rack. Locate in [#LOC]. To hold (12) bottles- (4) wide/(3)high. Bottles to be stored angled upward in the compartment. The bottom and sides are to include ribbed rubber inserts. | $1,047 |
| 3365-0108 | 10' folding ladder with feet. Locate in officer side roof top compartment. | $691 |
| 3365-0109 | (4) pike pole storage tubes. Locate inboard side of rack with pike pole hooks stored in the up position. | $905 |
| 3365-0110 | Recessed pike pole storage compartment located below officer side "T" of the tank. Compartment sized to store (3) pike poles. | $700 |
| 3365-0111 | Hard suction hose storage tray. Locate on [#LOC]. Includes (2) securing straps. For use with 13' hard suction hoses. | $1,020 |
| 3365-0112 | Over the hosebed ladder rack. Includes framing (with a sanded finish) and mounting points. Ladder storage box to be adjustable side to side with diamond plate front box. The ladder storage rack to have locking points of driver side outboard center and officer side outboard. The framework of the ladder rack to be 9.5" high. | $3,186 |
| 3365-0114 | Recessed pike pole storage compartment located [#LOC]. Compartment sized to store (3) pike poles. Pike pole box to be 7" deep. | $1,274 |
| 3365-0115 | Ladder storage thru tank for (1) 2-section 24' extension (1) 14' roof (1) 10' attic with feet and (3) pike poles. Reduces selected water tank capacity by approximately 250 gallons. | $2,983 |
| 3365-0116 | Ladder tunnel to extend to rear of body (over pump/plumbing). Extension to be aluminum and bolt-on for removal for pump maintenance. | $861 |
| 3365-0118 | (3) pike pole storage tubes. Locate [#LOC]. | $499 |
| 3365-0120 | SCBA/Fire Extinguisher storage rack. Locate in [#LOC]. To hold (12) bottles- (6) wide/(2)high. Bottles to be stored angled upward in the compartment. The bottom and sides are to include ribbed rubber inserts. | $1,047 |
| 3365-0121 | Hosebed storage box for (1) scoop stretcher (3)backboards and (4) pike poles. Scoop stretcher located in lower area of storage with stop located 67" back backboards located in middle area with stop 74" back and pike poles located in upper area for (2) 6' and (2) 8' pike poles. Includes vertically hinged door (wired to door ajar) with push-button latches. Located on officer side of hosebed. | $1,644 |

| Item No. | Description | |
|---|---|---|
| 3365-0122 | Officer side vertical storage tunnel. For use with low hosebed. Tunnel to hold: 2-Section 24' 14' roof 10' attic and (2) pike poles. Upper storage area to have hinged diamonad plate top for storage of misc. items. Includes vertically hinged rear diamond plate door(s) with D-ring latch. | $3,195 |
| 3365-0124 | Recessed pike pole storage compartment located below officer side compartment top. Compartment sized to store (2) pike poles. Recessed box to be 10" high for Boston Roof Hooks. | $1,062 |
| 3365-0125 | Officer side vertical storage tunnel. For use with low hosebed. Tunnel to hold: 2-Section 24' 14' roof 10' attic (6) pike poles and (2) 6" x 10' hardsuction hoses (individually vertically stacked). (2) pike poles will be in ladder tunnel and (2) in each hard suction storage. Includes vertically hinged rear diamond plate door(s) with push-button latch. | $2,933 |
| 3365-0126 | Pike pole tube(s) on overhead ladder rack to be mounted flush with rear of body. | $337 |
| 3365-0128 | Pike pole storage tube (1) One. Locate [#LOC]. | $168 |
| 3365-0129 | Officer side half length vertical storage tunnel. For use with low hosebed. Tunnel to hold: (2) backboards (1) 4' D-handled pike pole (1) 8' pike pole and (1) 6' pike pole. Make box for 4' D-handle pike pole 56" long. Includes vertically hinged rear diamond plate door with push-button latch. Pike poles to be located down low in tunnel with backboards located above. | $1,555 |
| 3365-0130 | OBSOLETE - USE HYDRAULIC - Zico Electric Drop Down Fold-A-Tank Rack. Rack to be capable to hold [#LOC] gallon portable tank. Locate on driver side of body. Includes diamond plate cover and mounting hardware. | $9,300 |
| 3365-0134 | Double Hard Suction Storage Rack. Driver side compartment top. Includes spring hold downs with scuff plates (as applicable). For use with 11' hard suction hoses. | $1,362 |
| 3365-0135 | Stop bracket set for Zico HLAS ladder rack. Optional bracket for additional ladder rack stability in the up position. | $225 |
| 3365-0137 | Pike pole. Locate (1) pike pole on officer side compartment top with pike pole hook stored in the up position. Mount with tulip clip(s) for use with D-handle pike pole. | $98 |
| 3365-0138 | SCBA/Fire Extinguisher storage rack. Locate in [#LOC]. To hold (9) bottles- (3) wide/(3)high. Bottles to be stored angled upward in the compartment. The bottom and sides are to include ribbed rubber inserts. | $788 |
| 3365-0140 | Stokes Basket Storage Box. Located in the officer side hosebed. Includes Nylon black strap hosebed style top and nylatron flooring (no divider). Box to hold (1) Junkin JSA-200 stokes basket. Includes stop located 86" back from opening. Vinyl hosebed cover to extend down over this storage. | $2,168 |
| 3365-0142 | Officer side hosebed storage box to store a (1) 26' 3-section (1) 12' roof (1) 10' attic ladder and (3) pike poles. Includes vertically hinged rear diamond plate door with push-button latches. | $2,936 |
| 3365-0143 | Hard Suction Storage Rack. Locate: [#LOC]. Includes (1) spring hold down and scuff plates behind spring mount (as applicable). Includes diamond plate box with air deflector to hold end of hose in place. | $774 |
| 3365-0148 | Backboard Storage Box. Located in the driver side hosebed. Includes drop down door (wired to door ajar) w/push-button latch hosebed style top and composite flooring. Box to hold (1) backboard. Includes stop bracket approximately 74" back from opening. Includes short hosebed divider located on top of storage area. | $1,867 |
| 3365-0162 | Hard suction racks (one each side) with job color painted box ends (rearward of body only). Racks to be positioned on compartment top so forward coupling end rest flush with end of forward compartment top. Each rack to have (1) spring hold down located as far forward as possible (no hold down at rear). Racks to include extension so rear coupling rest on the rack in the stowed position. Rearward box to be smooth plate and designed to fit around the rack extension. Size box to be 10"x 10"x 10". | $2,024 |
| 3365-0163 | Hard Suction Storage Box Vert. Located in the [#LOC] hose bed. Includes vertical hinged door (wired to door ajar) w/push-button latches and nylatron flooring. Box to hold (2) 10' hard suction hoses vertical stacked. | $1,644 |
| 3365-0164 | Backboard Storage Box. Located in the officer side hosebed. Includes drop down door (wired to door ajar) w/push-button latch hosebed style top and composite flooring. Box to hold (1) backboard. Includes stop bracket approximately 74" back from opening. Includes 45 degree angle plate at rear of the backboard storage. | $1,867 |
| 3365-0165 | Double hard suction storage rack. One (1) rack located above the other. Officer side compartment top. Includes spring hold downs with scuff plates (as applicable). | $768 |
| 3365-0173 | Hard Suction Storage Box. Stored below officer side just below the hosebed. Includes hinged door with push-button latch. | $614 |
| 3365-0174 | Hold down brackets to secure a (3) section extension (2) section extension and roof ladder. Requires additional ladder bracket height due to 6 sections of ladders. | $664 |
| 3365-0175 | Backboard Storage Box. Located in the officer side hose bed. Includes vertical hinged door (wired to door ajar) w/push-button latch hose bed style top if applicable to hose bed depth or smoothplate aluminum if no hose shall be stored above and composite flooring. Box to hold (2) backboards. | $1,867 |

| Item No. | Description | |
|---|---|---|
| 3365-0176 | Hosebed Storage Box. Located in the officer side hosebed. Includes drop down door (wired to door ajar) w/push-button latch(es) hosebed style top and nylatron flooring (no divider). Box to hold (1) stokes basket and (3) backboards. Includes stop bracket approximately 88" back from opening. Stokes basket 86" long x 24" wide x 8" high backboards will stow inside stokes basket. | $1,867 |
| 3365-0177 | Hold down brackets to secure a (3) section extension ladder. | $197 |
| 3365-0178 | Storage box for (1) 8' Dry Wall pike pole. Located in officer side roof top compartment. | $313 |
| 3365-0179 | Officer side vertical storage tunnel behind reduced upper depth right side compartments. Tunnel to hold: 24' 2-section and 14' roof plus (2) pike poles and a folding ladder. Includes vertically hinged rear smooth plate door with bent D-ring latch. | $2,069 |
| 3365-0180 | Backboard storage box located in the driver side of hosebed 9.75" off hosebed side wall. Storage to be 22" wide x 5" high. Includes drop down door (wired to door ajar) w/push-button latch hosebed style top and composite flooring. Box to hold (2) backboards. Includes stop bracket approximately 74" back from opening. Includes 45 degree angle plate at rear of the backboard storage. | $1,867 |
| 3365-0181 | Stop bracket to be located approximately 50" back in upper section of driver side of storage tunnel above the hard suction hoses. | $131 |
| 3365-0183 | Hard suction storage rack. Locate [#LOC]. Includes NFPA retaining strap(s). | $272 |
| 3365-0184 | Zico hydraulic drop down portable tank rack. Rack located to [#LOC] of body. Rack sized for [#COL] gallon aluminum frame portable tank. The control switching to be located on the side pump panel with the rack being in full view of the operator during operations. | $5,592 |
| 3365-0185 | Zico overhead ladder rack. Includes electrical relay with cover in compartment adjacent to the storage rack. Locate rack to [#LOC] of body. The control switching to be located at the pump module area with the rack being in full view of the operator during operations. | $6,708 |
| 3365-0186 | Zico overhead portable tank rack. Includes electrical relay with cover in compartment adjacent to the storage rack. Locate rack to [#LOC] of body. Rack sized for [#COL] gallon aluminum frame portable tank. | $6,708 |
| 3365-0187 | Zico drop down rack to have diamond plate cover between outboard rack assemblies. | $652 |
| 3365-0188 | Zico drop down rack to have smooth plate cover between outboard rack assemblies. Cover to be painted job color. | $795 |
| 3365-0189 | Manual drop-down portable tank storage rack. Includes forward and rearward securing clamps with manual releases. Locate rack to [#LOC] of body. Rack sized for steel framed [#COL] portable tank. | $1,908 |
| 3365-0190 | Manual drop down rack to have diamond plate cover over the forward rearward upper and outboard sides. Includes hand rails along the outboard front and rear and (1) on each end mounted on the upper area. | $628 |
| 3365-0191 | Manual drop down rack to have smooth plate cover over the forward rearward upper and outboard sides. Includes handrails along the outboard front and rear and (1) on each end mounted on the upper area. Cover to be painted job color. | $919 |
| 3365-0192 | Internal aluminum frame portable tank storage with vertically hinged smooth plate door painted job color (wired to door ajar) with D-ring latch. Access door to be located to the rear of the [#LOC] body. Included is a composite material floor overlay and a tank stop for use with a [#COL] aluminum frame portable storage tank. | $761 |
| 3365-0193 | Portable storage tank thru water tank. To be capable of storing a [#COL] aluminum frame portable storage tank. Storage thru tank will reduce overall gallon capacity of water tank. | $2,255 |
| 3365-0194 | Double hard suction storage rack. Locate [#LOC]. Includes NFPA retaining strap(s). | $575 |
| 3365-0195 | Hard suction hose storage tray. Locate on inboard side of [#LOC] overhead storage rack. Includes (2) NFPA retaining straps. | $427 |
| 3365-0196 | Ladder storage in hosebed for the following: (1) 2-section extension (1) roof ladder (1) attic and (2) pike poles. Extension and roof ladders stored nested. Includes (1) hosebed divider with squared off upper rear vertically hinged (to swing into hosebed area) door with latch (wired to door ajar indicator) and composite material overlay on hosebed flooring. Upper area open and main hosebed cover to be used to cover top area of ladder storage area. Storage located to [#LOC] of hosebed. | $1,150 |
| 3365-0197 | Portable storage tank in hosebed for the following: [#COL] gallon aluminum frame tank. Includes (1) hosebed divider with squared off upper rear vertically hinged (to swing into hosebed area) door with latch (wired to door ajar indicator) and composite material overlay on hosebed flooring. Upper area open and main hosebed cover to be used to cover top area of storage area. Storage located to [#LOC] of hosebed. | $1,150 |
| 3365-0198 | Storage box for (1) 10' length of hard suction hose. Includes vertically hinged door with latch (wired to door ajar indicator). Reduces selected water tank capacity by approximately 100 gallons on Tankers. Locate to [#LOC] below "T" of water tank. | $648 |
| 3365-0199 | Zico electric drop-down ladder rack. Rack located to [#LOC] of body. The control switching to be located on the side pump panel with the rack being in full view of the operator during operations. | $5,592 |

| Item No. | Description | |
|---|---|---|
| 3365-0202 | Hard Suction Storage Rack. Driver side in adjustable track above ladders. Includes spring hold downs and scuff plates. | $404 |
| 3365-0203 | Zico electric drop-down hard suction rack. Rack located to [#LOC] of body. The control switching to be located on the side pump panel with the rack being in full view of the operator during operations. The rack includes (2) main rack mounted 10' trays. | $5,592 |
| 3365-0206 | Storage tunnel capable of holding: (1) 2-Section (1) Roof (1) Attic (2) pike poles (1) backboard storage sleeve between 2-section and roof ladder and (1) 8' block storage with stop above 2-section ladder in Officer Side Storage Tunnel. Includes ladder tunnel door to hinge to officer side of truck. | $775 |
| 3365-0208 | Horizontal ladder bracket. Location and type of ladder: in officer side of hosebed storage pan to hold Little Giant model 17. | $269 |
| 3365-0209 | Officer side vertical storage tunnel. For use with low hosebed. Tunnel to hold: 2-Section 24' 14' roof 10' attic and (2) pike poles. Includes vertically hinged rear diamond plate door with push-button latch. Upper storage area to have an open top and run full legnth of the body. Upper area to have hosebed style flooring. | $3,174 |
| 3365-0214 | Hard suction storage thru tank for (2) 5" x 15' hard suction hoses. Includes vertical hinged door wired to door ajar with push button latch. Reduces selected water tank capacity by approximately 200 gallons. | $2,917 |
| 3365-0217 | Officer side vertical storage tunnel. For use with low hosebed. Tunnel to hold: 3-Section 35' 14' roof 10' attic and (3) pike poles. Pike poles to be stored in upper storage area. Includes vertically hinged rear diamond plate door(s) with push-button latch. | $2,069 |
| 3365-0218 | Recessed D-handle pike pole storage compartment located below officer side compartment top. Compartment sized to store (2) 6' D-handle pike poles. | $700 |
| 3365-0219 | Diamond plate storage compartment located on officer side compartment top. Compartment sized to store (1) 10' ladder with feet and (2) 6' D-handle pike poles. | $700 |
| 3365-0220 | Storage box for (1) 6" x 10' hard suction hose. Includes vertically hinged swing-out door with push-button latch (wired to door ajar). Box to be smooth plate and painted job color. Located [#LOC]. | $558 |
| 3365-0221 | Driver side vertical storage tunnel. For use with low hosebed. Tunnel to hold: 2-Section 24' 14' roof 10' attic and (2) pike poles. Includes vertically hinged rear diamond plate door(s) with push-button latch. | $2,069 |
| 3365-0222 | Upper hosebed storage area above driver side compartments and officer side ladder/storage tunnel or compartments as applicable. Upper storage areas to have an open top and run length of the hosebed area. Includes hosebed style flooring. | $2,015 |
| 3365-0223 | Hard Suction Storage Rack. Officer side on compartment top. Rack to be 118" in length and be held back 9" from the front of the compartment top. Includes spring hold downs and scuff plates. | $404 |
| 3365-0226 | Hosebed ladder storage box with diamond plate top. Located centered in hosebed and to secure from driver to officer: (1) 10' attic w/feet (in a box) w/(2) 10' pike pole tubes mounted on top (1) PRL-12 & (1) PEL3-24. Ladders to be stored on beam. Included are (2) hosebed dividers with squared ends diamond plate top and a vertically hinged diamond plate door (hinged to officer side) wired to the door ajar indicator. | $1,368 |
| 3365-0229 | Hosebed Storage Box. Located in the officer side hosebed between aluminum hosebed cover center divider and officer side hosebed wall (Approx 34.875" W X 12" interior height). Includes drop down door (wired to door ajar) w/push-button latches hosebed style top composite flooring (1) vertical divider full depth of hosebed held 12" short of rear - located 5" off center divider to hold (3) 10' pike pole tubes. (1) horizontal divider full depth of hosebed and approx 29.625" wide X approx 7.875" off hosebed floor to form upper and lower storage. Lower storage to have a stop at 72". Upper storage to have a vertical divider approx 18" off driver side divider with a stop at 72" for backboard storage. Storage box to be sealed as tight as possible from water and road grime. | $2,749 |
| 3365-0236 | Officer side vertical storage tunnel behind reduced upper depth right side compartments. Tunnel to hold: 24' 2-section and 14' roof plus (4) pike poles and a folding ladder. Includes vertically hinged rear smooth plate door with bent D-ring latch. | $2,400 |
| 3365-0238 | Folding ladder and pike pole storage compartment located in driver side of hosebed. Includes drop down door with push button latch. Compartment sized to store a 10' ladder with feet and (2) pike poles. | $908 |
| 3365-0245 | Pike pole tubes in officer side storage tunnel to be modified to hold (1) ARH-60 and (1) ARH-72 pike poles. | $205 |
| 3365-0246 | Officer side vertical storage tunnel behind reduced upper depth right side compartments. Tunnel to hold: 24' 2-section and 14' roof plus (2) pike poles and a folding ladder. Includes vertically hinged rear 3/16" treadplate door with bent D-ring latch. | $2,208 |
| 3365-0253 | Ladder storage thru tank for (2) 6" x 10' hardsuction hoses. Reduces selected water tank capacity by approximately 150 gallons. | $1,652 |
| 3365-0254 | Hard suction storage box with cargo net cover at rear. Located in B1 compartment to be in-line with thru the tank tunnel. | $605 |

| Item No. | Description | |
|---|---|---|
| 3365-0258 | Recessed pike pole storage compartment located officer side "T" of the tank. Compartment sized to store (3) pike poles. Center pike pole will be a multi -purpose" hook. | $700 |
| 3365-0259 | Recessed pike pole storage compartment located officer side just below the hosebed. Compartment sized to store (2) pike poles. | $468 |
| 3365-0260 | Ladder storage thru tank for (1) 2-section 24' extension (1) 14' roof (1) 10' attic with feet (3) pike poles and (1) backboard. Reduces selected water tank capacity by approximately 300 gallons. | $3,177 |
| 3365-0262 | Double Hard Suction Storage Rack for 8' hard suction hoses. Driver side compartment top. Includes spring hold downs with scuff plates (as applicable) | $830 |
| 3365-0265 | Recessed storage compartment located officer side just below hosebed. Compartment sized to store (1) 10' ladder with feet offset to left and (1) 6' pike pole offset to right tube to be set back 6" from opening. | $828 |
| 3365-0267 | Officer side vertical storage tunnel. For use with low hose bed. Tunnel to hold: [#LOC]. Includes vertically hinged rear smooth plate door(s) with push-button latch. | $2,069 |
| 3365-0271 | Ladder storage box in driver side of hosebed. Dimensions to be 25" wide x 8" high x length of hosebed. Includes ladder stop 66" back from opening and diamond plate drop down door with push button latches (wired to door ajar indicator) and composite material overlay on hosebed flooring. | $1,150 |
| 3365-0272 | Hard Suction Storage Box. Located in the driver side hosebed. Includes vertical hinged door (wired to door ajar) w/push-button latches and nylatron flooring. Box to hold two (2) 6" X 10' hard suction hoses. | $1,644 |
| 3365-0274 | Hard Suction Storage Box. Located horizontal in the officer side hosebed. Includes vertical hinged door (wired to door ajar) w/push-button latches and nylatron flooring. Box to hold two (2) 6" X 14' hard suction hoses. | $1,644 |
| 3365-0275 | Hard suction storage rack for (1) 6" X 14' suction hose. Locate [#LOC]. Includes NFPA retaining strap(s). | $412 |
| 3365-0276 | Zico pike pole mounting brackets (PR). Locate on top of Zico drop-down ladder rack. Brackets to be for D-ring pike poles. | $173 |
| 3365-0278 | Officer side vertical storage tunnel. For use with low hosebed. Tunnel to hold: 2-Section 24' 14' roof 10' attic and (2) pike poles. Includes vertically hinged rear diamond plate door(s) with push-button latch. The pike poles and attic ladder to be stored below the 2-section and roof ladders. Ladder tunnel will not extend to top of the body the area above the ladder tunnel to have hosebed style flooring. | $3,174 |
| 3365-0280 | Hard Suction Storage Box. Located horizontal in the officer side hosebed. Includes vertical hinged dia plate door (wired to door ajar) w/push-button latches and nylatron flooring. The storage area shall be sized to hold two (2) 6" X 10' long hard suction hoses laying side-by-side. | $1,644 |
| 3365-0281 | Hard Suction Storage Box. Located horizontal in the officer side hosebed. Includes vertical hinged door (wired to door ajar) w/push-button latches and nylatron flooring. Box to hold two (2) 6" X 13' hard suction hoses. | $1,644 |
| 3365-0283 | Divider Long. To run full length of hose bed above ladder tunnel (front to rear). | $513 |
| 3365-0284 | Officer side vertical storage tunnel behind reduced upper depth right side compartments. Tunnel to hold: 28' 2-section and 16' roof (2) pike poles and a folding ladder plus two 10' lengths of 6" hard suction hose above ladders together with a skinny backboard. Where ladders extend into the pump enclosure they shall be enclosed from the elements with aluminum treadplate. | $1,773 |
| 3365-0285 | Officer side vertical storage tunnel. For use with low hosebed. Tunnel to hold: 2-Section 20' 12' roof 10' attic and (2) pike poles. Includes vertically hinged rear smooth plate door (to accommodate graphics/striping) with push-button latch. Upper storage area to have an open top and run full length of the body. Upper area to have hosebed style flooring. | $3,174 |
| 3365-0286 | Officer side vertical storage tunnel behind reduced upper depth compartments. Tunnel to hold: 24' 2-section and 14' roof plus (2) pike poles and a folding ladder. Above ladders is storage area for a sheet rock hook and a pike pole with D-handle both 4' in length. Stops shall be provided ahead this storage area approximately 60" from the rear opening to prevent these items from sliding forward during transport. Includes vertically hinged rear smooth plate door with bent D-ring latch. | $2,166 |
| 3365-0289 | Hard suction hose storage tray. Locate on inboard side of overhead ladder rack. Includes spring hold downs and scuff plates behind spring mounts (as applicable). | $451 |
| 3365-0290 | Ladder storage thru tank for (1) 3-section 30' extension (1) 14' roof (1) 10' attic with feet and (2) 10' pike poles. Reduces selected water tank capacity by approximately 300 gallons for pumpers and 350 gallons for tankers. | $2,917 |
| 3365-0292 | Hard Suction Storage Box. Located in the driver side hosebed. Includes vertical hinged door (wired to door ajar) w/push-button latches and nylatron flooring. Box to hold one (1) 6" X 12' hard suction hoses. | $823 |
| 3365-0293 | Cover diamond plate for hydraulic ladder rack power supply. Location: [#LOC]. | $210 |
| 3365-0294 | There shall be a metal plate mounted to the side of the portable tank rack to assist in the application of the NFPA stripe and/or Lettering. | $175 |

| Item No. | Description | |
|---|---|---|
| 3365-0295 | Manual drop down portable tank storage rack. Includes forward and rearward securing clamps with manual releases. Locate rack to [#LOC] of body. Rack sized for an aluminum framed [#COL] portable tank. | $1,908 |
| 3365-0297 | (1) Pike pole storage tube pike pole hook stored in the up position. (1) Dry wall hook storage using brackets to secure in place rather than tube. Locate inboard side of rack. | $564 |
| 3365-0298 | (5) Pike pole storage tubes. Locate inboard side of rack with pike pole hooks stored in the up position. | $1,297 |
| 3365-0299 | Hard suction storage box. Located in the officer side hose bed. Includes a swing open door vertical hinged on the left hand side (inboard) and wired to door ajar w/push-button latch(es) hose bed style top and nylatron flooring (no divider). Box to hold [#LOC] tubes. | $1,644 |
| 3365-0302 | Provision to store (4) Fire Department supplied 50' lengths of 2-1/2" high rise hose packs on right side compartment top. | $1,196 |
| 3365-0303 | Four (4) pike poles and a folding ladder tucked behind ground ladders on the adjustable ladder tracks. | $1,160 |
| 3365-0304 | Hard suction storage within the hosebed. (1) Hard suction tube shall be located on each side of the hosebed center divider. The rear and top hosebed covers shall be used for access. | $1,644 |
| 3365-0305 | Provision to store (4) Fire Department supplied 50' lengths of 2-1/2" high rise hose packs on right side compartment top. (6) PAC ADJUSTAMOUNT brackets to secure hose. | $1,566 |
| 3365-0306 | Backboard storage sleeve with containment strap(s). Located in L1 and R1 compartments just below compartment offset to be approximately 9" high x 27" wide as clearance permits. Locate as far forward as possible. | $1,239 |
| 3365-0307 | Hard suction storage box horizontal side by side. Located in the officer's side hose bed. Includes lift-up door (wired to door ajar) w/bent D-ring latch hose bed style top and flooring. Box to hold (2) 6" x 10' long tubes. | $1,644 |
| 3365-0308 | Hard Suction Storage Rack. Officer side in adjustable track below ladders (if applicable). Includes spring hold downs and scuff plates. | $404 |
| 3365-0309 | Hard Suction Storage Box with long handle tool storage trough with stop at 72". Stored at rear panel driver side for two (2) hoses. Includes vertical hinged smooth plate door and bent D-ring latch. | $704 |
| 3365-0310 | Hard suction storage box smooth plate side wall construction painted job color. Located on the [#LOC]. Includes vertically hinged door(s) (wired to door ajar) w/D-Ring latch(s). Box to hold (3) tubes and to extend to the back side of the L2 compartment and to be approximately the same height as L1 L2 compartments. | $1,644 |
| 3365-0311 | Hard suction storage box with (2) pike poles (pr). Stored (1) each side below "T" of tank. Includes hinged door with push-button latch. | $1,078 |
| 3365-0312 | Ladder storage thru tank for AlcoLite ladders (1) 3-section 35' extension (1) 16' roof (1) 10' attic with feet and (2) pike poles. Reduces selected water tank capacity by approximately 250 gallons for pumpers and 300 gallons for tankers. | $3,177 |
| 3365-0316 | Storage box for (1) 15' length of hardsuction hose. Includes vertically hinged door with latch (wired to door ajar indicator). Locate [#LOC] side below "T" of water tank. | $756 |
| 3365-0319 | Hard Suction Storage Rack. Driver side compartment top. Includes spring hold downs and scuff plates behind spring mounts (as applicable). | $388 |
| 3365-0320 | Storage box on officer side compartment top with hinged full length side hinged down with butterfly latches (wired to door ajar). Storage to accomodate 250' of 2.5" DJ hose with nozzle for hi-rise pac with black dri-deck flooring. | $1,062 |
| 3365-0321 | Horizontal ladder bracket Includes .187" smooth aluminum boot painted black durabak with ladder hold down. Location and type of ladder: [#LOC]. | $321 |
| 3365-0322 | Recessed New York hook and pike pole storage compartment located officer side just below the "T" of the tank to include a smooth plate door with thumb latch(s). Compartment sized to store (2) Fire Hooks Unlimited New York Hook Model RH-6 and RH-8 and (2) pike poles. | $908 |
| 3365-0323 | Double hard suction storage rack. Two (2) 2.5" or 3" x 10` hard suction hoses. One (1) next the other horizontally mounted. Includes spring hold downs with scuff plates (as applicable). Locate: Driver side compartment top. | $768 |
| 3365-0324 | Hard suction storage boxes welded one each side to upper body hose bed side sheets to be painted as applicable. Includes vertically hinged brushed stainless steel rear access doors and aluminum hose trays with forward travel limit stops. Requires minimum 88" high pumper body. | $2,707 |
| 3365-0325 | Officer side vertical storage tunnel behind reduced upper depth right side compartments. Tunnel to hold: 35' 3-section and 14' roof (2) pike poles and a folding ladder. Where ladders extend into the pump enclosure they shall be enclosed from the elements with aluminum treadplate. Includes vertically hinged rear smooth aluminum door with bent D-ring latch. | $2,069 |
| 3365-0326 | Recessed pike pole storage compartment located below officer side "T" of the tank. Compartment sized to store (2) pike poles. | $700 |

| Item No. | Description | |
|---|---|---|
| 3365-0328 | Officer side vertical storage tunnels. For use with low hose bed. Tunnels to hold [#LOC]. The upper ladder tunnel shall be full length of hose bed same width as lower ladder tunnel. The upper ladder tunnel compartment shall be fully enclosed except for an open top/roof which will be open to the elements. Includes vertically hinged rear .1875" smooth plate doors with D-ring latch on each door accessible at the rear of body. | $2,200 |
| 3365-0329 | Ladder storage thru tank for (1) 2-section 24' extension (1) 16' roof (1) 10' attic with feet and (2) pike poles. Reduces selected water tank capacity by approximately 250 gallons for pumpers and 300 gallons for tankers. | $2,917 |
| 3365-0331 | Recessed folding ladder and pike pole storage compartment located right rear of body up high. Compartment sized to store a 10' ladder with feet and (2) 12' pike poles. | $1,052 |
| 3365-0332 | Recessed pike pole storage compartment located left rear of body up high. Compartment sized to store (4) 10' pike poles. | $933 |
| 3365-0333 | Backboard storage for use with low hose bed stroage tunnel only. Storage for (1) backboard vertically in officer side storage tunnel. Includes stop bracket at the front. | $380 |
| 3365-0334 | Ladder Storage Box. Located in the officer side hosebed. The top shall be enclosed using the hosebed cover the rear access shall be included in the vinyl rear flap as part of the hose bed cover (hinged door not included) The hosebed cover and rear flap shall be sold separately. Box to hold (1) Alcolite PEL 24' 3-section (1) Alcolite PRL 12' roof (1) Alcolite FL 10' attic ladder (2) backboards and (2) pike poles. | $2,834 |
| 3365-0335 | Miscellaneous storage in hosebed above the ladder tunnel. Upper area open and main hosebed cover to be used to cover top area of the storage area. There is to be a bolted end plate at the rear of the storage area horizontal adjustable tracks 60" from the rear mounted forward with a divider. | $375 |
| 3365-0337 | Two (2) pike poles and a folding ladder tucked behind ground ladders on the adjustable ladder tracks on the officer's side outside of the hose bed. | $1,160 |
| 3365-0338 | Hard Suction Storage Box. Located in the [#LOC] hose bed. Includes vertical hinged door (wired to door ajar) w/push-button latches (without nylatron flooring as preferred by customer). Box to hold (2) 10' hard suction hoses. | $1,644 |
| 3365-0339 | Hard Suction Storage Box. Located in the [#LOC] hose bed. Includes vertical hinged smooth plate door (wired to door ajar) w/D-Ring latch(s) and Nylatron flooring. Box to hold (2) 10' hard suction hoses. | $1,716 |
| 3365-0340 | Dual hard suction hose storage with stops located (above ladders) in the officer side ladder storage tunnel. Includes a common taller rear access door (wired to door ajar) w/bent D-ring deadbolt type latch. | $1,162 |
| 3365-0342 | Dual hard suction hose storage with stops located in the officer side upper header. Includes a lift-up rear access door (wired to door ajar) w/bent D-ring latch. | $1,867 |
| 3365-0344 | Hard suction storage box. Located in the officer side hose bed. Includes a swing open diamond plate door vertically hinged on the right hand side (outboard) and wired to door ajar w/push-button latch(es) hose bed style top and nylatron flooring (no divider). Box to hold [#LOC] tubes. | $1,644 |
| 3365-0346 | Storage box for (1) 12' length of hard suction hose. Includes vertically hinged door with latch (wired to door ajar indicator). Locate to [#LOC] below "T" of water tank. | $648 |
| 3365-0347 | Recessed folding ladder storage compartment located driver side just below hosebed. Compartment sized to store a 10' ladder with feet. | $691 |
| 3365-0348 | Ladder storage box in driver side of hosebed. Dimensions to be 25" wide x 8" high x length of hosebed. Includes ladder stop 66" back from opening and diamond plate drop down door with a D-ring latch (wired to door ajar indicator) and composite material overlay on hosebed flooring. | $1,150 |
| 3365-0349 | Stop bracket to be located approximately 80" back in the lower area of the driver side storage tunnel. | $131 |
| 3365-0350 | Hard suction storage box (pr). Stored (1) each side below "T" of tank. Storage boxes shall be lined with plastic liner and include hinged door with push-button latch. Inside compartment and tube tunnel to be enlarged in depth to fit strainers to be pre-connected as stored. | $1,249 |
| 3365-0352 | Portable Tank Storage Box. Located in the officer side hosebed. Includes vertically hinged door (wired to door ajar) w/push-button latches (hinge to the exterior and latch to the interior) hosebed style top and nylatron flooring (no divider). Box to hold [#LOC] gallon aluminum framed Fol-da-tank portable tank. | $1,644 |
| 3365-0353 | Double hard suction hose storage tray. Locate inboard side of overhead ladder rack(s) (1) stacked above the other. Includes (2) securing straps per tray. For use with 10' hard suction hoses. | $2,325 |
| 3365-0354 | Ladder storage thru tank for (1) 2-section 24' extension (1) 14' roof (1) 10' attic with feet. Ladders shall be stored vertically or on their side (ILO horizontal/flat). (1) 10' Folding ladder and (2) pike poles stacked over and under each other adjacent ladder storage. Tunnel shall be approx centered in rear body. Reduces selected water tank capacity by approximately 300 gallons. | $3,234 |
| 3365-0355 | Hard suction Storage Box located in the drivers side roof top compartment. The storage to be boxed off inside roof top compartment. Includes vertical hinged smooth plate door (wired to door ajar) w/push-button latch. Storage to hold [#LOC] 6" x 10' hard suction hoses. | $2,112 |

| Item No. | Description | |
|---|---|---|
| 3365-0356 | Ladder storage thru tank for (1) 2-section 24' extension (1) 14' roof (1) 10' attic with feet and (2) pike poles. Provide retaining straps to hold contents stationary. Reduces selected water tank capacity by approximately 250 gallons for pumpers and 300 gallons for tankers. | $2,996 |
| 3365-0360 | Driver side vertical storage tunnel behind reduced upper depth left side compartments. Tunnel to hold: up to (3) 10' lengths of 6" hard suction hose. Includes vertically hinged rear smooth plate door with bent D-ring latch. | $2,166 |
| 3365-0361 | Zico hydraulic drop down portable tank rack. Rack located to [#LOC] of body. Rack sized for [#COL] gallon aluminum frame portable tank. The control switching to be located driver side rear compartment face with the rack being in full view of the operator during operations. | $5,743 |
| 3365-0363 | Hard suction storage rack. Locate:[#LOC]. Includes NFPA retaining strap(s). For use with 15' hard suction hose. | $530 |
| 3365-0364 | Ladder storage box. Located in the officer side hose bed. Includes vertical hinged door (wired to door ajar) w/push-button latch(es) hose bed style top and nylatron flooring (no partition). Box to hold (1) 20' 2-Section and (1) 12' roof. | $1,644 |
| 3365-0365 | Officer side vertical storage tunnel. For use with low hosebed fully enclosed and extended to pump area with drain holes forward in tunnel flooring. Tunnel to hold: 2-Section 24' 14' roof 10' attic and (2) pike poles. Includes vertically hinged rear smooth plate door(s) with push-button latch. The pike poles and attic ladder to be stored below the 2-section and roof ladders. Ladder tunnel will not extend to top of the body the area above the ladder tunnel to have hosebed style flooring. | $3,481 |
| 3365-0366 | Double Hard Suction Storage Rack. Driver side compartment top. Includes spring hold downs with scuff plates (as applicable). For use with 14' hard suction hoses. | $1,362 |
| 3365-0367 | Zico hydraulic drop down portable tank rack. Rack located to [#LOC] of body. Rack sized for [#COL] gallon aluminum frame portable tank. The control switching to be located on the side pump panel with the rack being in full view of the operator during operations. | $5,592 |
| 3365-0368 | Zico hydraulic drop down portable tank rack. Rack located to [#LOC] of body. Rack sized for [#COL] gallon aluminum frame portable tank. The control switching to be located officer side rear compartment face with the rack being in full view of the operator during operations. | $5,592 |
| 3365-0371 | OBSOLETE: Use 3365-0498. The storage tunnel directly behind the upper area of the officer side compartments shall be fully enclosed as it extendes into the pump module area with drain holes forward in tunnel. | $621 |
| 3365-0373 | (2) D-handle pike pole storage tubes 10' on length. Locate outboard side of ladder rack with pike pole hooks stored in the up position. | $523 |
| 3365-0374 | SCBA/Fire Extinguisher storage rack. Locate in R1 mounted to lower ceiling below compartment offset. To hold (6) bottles to be stored angled upward in the compartment. The bottom and sides are to include ribbed rubber inserts. Each storage slot to be 9.25" wide x 11" high. | $2,728 |
| 3365-0375 | Hard suction storage box. Located in the driver side hose bed. Includes a swing open diamond plate door vertical hinged on the right hand side (inboard) and wired to door ajar w/"D"-ring latch(es) hose bed style top and nylatron flooring (no divider). Box to hold [#LOC] tubes. | $1,644 |
| 3365-0377 | Fire extinguisher storage rack to hold (3) extinguishers in a single horz row. The rack shall be raised 3" on the open end to allow the extinguishers to slide back into the box at an angle. Bottom and sides to include ribbed rubber inserts. Each opening to have a vertically mounted strap. The rearward opening shall be 15" wide the middle and forward opening to be 10" wide. The opening shall be 18" high. The top shall be flat and have a 2" lip up for storing items as a permanent shelf. Locate floor mtd in [#LOC]. | $688 |
| 3365-0378 | Ladder Storage Box. Located in the officer side hosebed. The top shall be enclosed using hosebed style top. Includes drop down door (wired to door ajar) W/ D-ring latch. Box to hold (1) Alcolite FEL 24' 2-section (1) Alcolite FRL 14' roof (1) Alcolite FL 10' attic ladder and (5) 10' pike poles (NY hooks). | $2,834 |
| 3365-0379 | Fire extinguisher storage rack to hold (3) extinguishers in a single horz row. Bottom and sides to include ribbed rubber inserts. Each opening to have a vertically mounted strap. The top shall have a 1" lip up for storing items.Locate floor mtd in [#LOC]. | $688 |
| 3365-0380 | Zico pike pole mounting brackets (PR). Locate outboard on top of Zico drop-down ladder rack. | $173 |
| 3365-0382 | Hose bed storage compartment for Low Hosebed body. Contents stored as follows from left to right: (1) Model 17 Little Giant ladder extended (2) pike poles (6' with drywall hook 10' with dry wall hook)above the Little Giant ladder (1) 10' folding ladder above the Little Giant ladder (2) 6" x 10" hard sution hoses. | $2,520 |
| 3365-0383 | Officer side vertical storage tunnel behind reduced upper depth right side compartments. Tunnel to hold: 24' 2-section and 14' roof plus (2) pike poles and a folding ladder. Does not include a door. | $1,821 |
| 3365-0384 | Single hard suction hose storage with stop located (above ladders) in the officer side ladder storage tunnel. Includes a common taller rear access door (wired to door ajar) w/bent D-ring deadbolt type latch. | $1,162 |
| 3365-0387 | Hard Suction Hose Rack for 2.5" or 3" Hose located inboard on hydraulic ladder rack (Each) | $251 |

| Item No. | Description | |
|---|---|---|
| 3365-0389 | Hard suction hose storage tray. Locate on top of Zico drop-down ladder rack. Mount secure straps further outboard to accommodate longer hard tube or 10' hard suction tube with a Kochek BS60 Barrel strainer pre-attached. | $853 |
| 3365-0390 | Ladder storage box. Located in the driver side hose bed. Includes vertically hinged door (wired to door ajar) w/push-button latch(es) hose bed style top and nylatron flooring (no partition). Box to hold (1) 22' 3-Section (1) 10' roof and (1) 8' folding ladder | $1,644 |
| 3365-0392 | Storage Tunnel. A storage tunnel shall be provided constructed of break formed .125" aluminum sheet located behind the officer upper compartments. Includes a hinged rear access door (wired to door ajar) with a 2-point bent D-ring latch. | $2,453 |
| 3365-0395 | Fire Extinguisher storage rack. Locate in B1 mounted to ceiling and/or compartment walls as applicable to drop down and exit just below the roll up door when opened. To hold (3) bottles- (3)wide/(1)high. Each box to be 11" high x 11" wide. The bottom and sides are to include ribbed rubber inserts. The storage box shall have a drop down door with a latch to secure the cylinders in place during transit. | $434 |
| 3365-0397 | Officer side vertical storage tunnels. For use with low hose bed. Tunnels to hold: [#LOC]. The upper ladder tunnel shall be full length of hose bed same width as lower ladder tunnel. The upper ladder tunnel compartment shall be fully enclosed except for an open top/roof which will be open to the elements. | $2,412 |
| 3365-0398 | Hard suction storage box (pr). Stored (1) each side below "T" of tank. Includes hinged door with push-button latch. Tube tunnels to extend through raised rear enhanced extended compartment steps to gain additional capacity for longer length tube storage. Tube tunnels to fit One (1) 6" X 12' Hard suction tube on each side. | $1,321 |
| 3365-0400 | Officer side vertical storage tunnels. For use with low hose bed. Tunnels to hold: [#LOC]. The upper tunnel to have enclosed storage for (2) 10' X 6" hard suction hoses (stacked) with (2) pike poles with multipurpose hooks (recessed 5" fwd of door). The upper area above and forward of the fully enclosed hard suction / pike pole storage to be open top/roof which will be open to the elements includes drain hole(s) as required. Includes vertically hinged rear .1875" smooth plate doors with D-ring latch on each door accessible at the rear of body. | $3,212 |
| 3365-0401 | Officer side vertical storage tunnel behind reduced upper depth right side compartments. Tunnel to hold: 24' 2-section and 16' roof plus a folding ladder. Includes vertically hinged rear smooth plate door with bent D-ring latch. | $1,910 |
| 3365-0403 | Zico model HLAS-HS-2KIT Double hard suction hose storage tray. Locate on inboard side of overhead ladder rack. Includes (2) securing straps per tray. | $836 |
| 3365-0404 | Hosebed storage box. Located in the center of the hosebed. To hold (1) backboard (1) 10' pike poles(1) 8' pike pole (1) 6' NY style pike pole (1) 6' pike pole and (1) 10' attic ladder with access from a vertically hinged diamond plate door (wired to door ajar) with a push-button latch. | $1,868 |
| 3365-0405 | Hose tray storage with stop located (above ladders) in the officer side ladder storage tunnel. Includes a common taller rear access door (wired to door ajar) w/bent D-ring deadbolt type latch. | $1,162 |
| 3365-0408 | Hard Suction Storage Box. Located in the officer side hosebed. Includes vertical hinged door (wired to door ajar) w/push-button latches and nylatron flooring. Box to hold one (1) 6" X 10' hard suction hose. | $823 |
| 3365-0409 | Ladder storage box. Located in the officer side hose bed. Includes vertically hinged diamond plate door (wired to door ajar) w/push-button latch open top and nylatron flooring (no partition). Box to hold (1) 20' 2-Section and (1) 12' roof (1) 10 foot attic ladder with feet. and (2) 10' pike pole tubes. | $1,980 |
| 3365-0410 | Ladder Storage Box. Located in the officer side hosebed. The top shall be enclosed using the hosebed cover the rear access shall be equipped with an outboard vertical hinged door with thumb latch and moon spring hold open The hosebed cover and rear flap shall be sold separately. Box to hold (1) Alcolite PEL 24' 3-section (1) Alcolite PRL 12' roof with separete divider and (1) Model 13 Little Giant | $2,834 |
| 3365-0411 | Driver side ladder storage tunnel. Includes area for a vertically stored 24' 2-section'and 14' roof. Includes vertically hinged rear smooth plate door with push-button latch. | $1,196 |
| 3365-0414 | Backboard stop bracket to be located approximately 80" back in officer side of ladder tunnel. | $241 |
| 3365-0416 | Hosebed ladder storage box with diamond plate top. Located centered in hosebed and to secure from driver to officer: (3) 2.5" x 10' hard suction tubes (2) 10' pike pole tubes mounted down low (1) 925-A 22' 3 Sect & (1) 775-A 10' Roof. Ladders to be stored on beam. Included are (2) hosebed dividers with squared ends diamond plate top and a vertically hinged diamond plate door (hinged to officer side) wired to the door ajar indicator. | $1,368 |
| 3365-0417 | Zico attic ladder mounting brackets (PR). Locate [#LOC]. | $229 |
| 3365-0420 | Dual hard suction hose storage with stops located in the drivers side upper header. Includes a lift-up rear access door (wired to door ajar) w/bent D-ring latch. | $1,867 |
| 3365-0422 | Ladder storage through tank for (1) 2-section 24' extension (1) 14' roof (1) 10' attic with feet(2) pike poles and (2) backboards. Reduces selected water tank capacity by approximately 350 gallons. | $3,392 |

| Item No. | Description | |
|---|---|---|
| 3365-0423 | Recessed folding ladder storage compartment located [#LOC]. Compartment sized to store a 10' ladder with feet. | $579 |
| 3365-0425 | Officer side vertical storage tunnel. For use with low hose bed. Tunnel to hold: 2-section 24' 14' roof 10' attic (2) pike poles (2) NY Hooks (1) piercing nozzle area for fire brooms and area for shovels. Includes vertically hinged rear brushed stainless steel door(s) with push-button latch. | $2,599 |
| 3365-0426 | (3) Hard Suction Storage Racks. Driver side hosebed side with adjustable tracks. Includes spring hold downs and scuff plates behind spring mounts (as applicable). | $1,059 |
| 3365-0427 | Hard suction storage box. Located on the driver side compartment top. Includes vertical hinged door at the rearward of the apparatus as installed that swings outward (wired to door ajar) w/push-button latch To be constructed of .125" thick aluminum tread plate with nylatron flooring. Box to hold one (1) 6 inch dia. x 10 foot hard tube. | $1,421 |
| 3365-0428 | Hard suction storage box. Located on the officer side compartment top. Includes vertical hinged door at the rearward of the apparatus as installed that swings outward (wired to door ajar) w/push-button latch To be constructed of .125" thick aluminum tread plate with nylatron flooring. Box to hold one (1) 6 inch dia. x 10 foot hard tube. | $1,421 |
| 3365-0429 | Hard suction Storage Box located in the driver side roof top compartment. The storage to be boxed off inside roof top compartment. Includes vertical hinged smooth plate door (wired to door ajar) w/push-button latch. Storage to hold (2) 6" X 12' hard suction tubes. | $2,112 |
| 3365-0430 | Extra wide folding ladder/rake pole box and (2) additional pike poles (total of 4) stored outboard of 2-section ladder located in Officer Side Tunnel. Compartment sized to store a 10' ladder with feet with 72" long are for rake pole and (2) additional pike poles. | $656 |
| 3365-0431 | Hard suction storage box. Located in the officer side hose bed. Includes vertically hinged diamond plate door (wired to door ajar) with D-Ring latch hose bed style top and nylatron flooring (no divider). Box to hold 3 tube(s). | $1,644 |
| 3365-0434 | Ladder Storage Box. Located in the officer side hosebed. The top shall be enclosed using the hosebed cover the rear access shall be equipped with an INBOARD vertical hinged door with thumb latch and moon spring hold open The hosebed cover and rear flap shall be Sold Separately. Rear Flap does not cover rear ladder box door. Box to hold (1) Alcolite PEL 24' 3-section (1) Alcolite PRL 12' roof with separete divider (1) Model 13 Little Giant (1) 6` Firehook model MPH-6 pike pole w/gas shut-off end and (1) 8` Firehook model MPH-8 pike pole w/gas shut-off end. | $3,167 |
| 3365-0435 | Nylon black strap with clip release for use with Drv/Ofc side storage tunnel. | $92 |
| 3365-0436 | Ladder storage box. Located in the officer side hose bed. Includes vertically hinged door (wired to door ajar) w/push-button latch(es) and nylatron flooring (no partition). Box to hold (1) 20' 2-Section and (1) 12' roof. | $1,644 |
| 3365-0437 | Officer side vertical storage tunnel. For use with low hose bed. Tunnel to hold: [#LOC]. Includes vertically hinged rear diamond plate door(s) with D-ring latch. | $2,121 |
| 3365-0438 | Storage tunnel above B1 capable of holding: (1) Ferno Washington Model 71 stokes basket. Install (1) divider 26" off driver side wall full length with nylatron on floor and stop set at 90". Right side remaining area will have a stop set at 72". | $1,039 |
| 3365-0439 | Recessed folding ladder and pike pole storage compartment located right rear of body up high. Compartment sized to store a 10' ladder with feet and (3) 10' pike poles. The pike poles shall be (1) mounted from the top and (2) at the bottom of the box. | $1,280 |
| 3365-0440 | Zico HHS-TM-1 hard suction storage rack. Locate on the Zico Hydraulic Portable Tank System. Includes NFPA retaining strap(s). | $458 |
| 3365-0441 | Zico model HLAS-HS-1KIT Single hard suction hose storage tray. Locate on inboard side of overhead ladder rack. Includes (2) securing straps. | $527 |
| 3365-0442 | Officer side vertical storage tunnel. For use with low hosebed. Tunnel to hold: 2-Section 24' 14' roof 10' attic(2) pike poles and (1) backboard. Includes vertically hinged rear diamond plate door(s) with push-button latch. Includes upper area of ladder tunnel to have (2) roof top compartments. Includes hinged raised compartment lids with turn latches. Each lid to have (1) bracket mounted light and to be wired to door ajar indicator in cab. | $3,588 |
| 3365-0443 | Hard suction storage rack for (1) 6" X 8' suction hose. Locate [#LOC]. Includes NFPA retaining strap(s). | $294 |
| 3365-0445 | Single hard suction hose storage without stop located (above ladders) in the officer side ladder storage tunnel. Includes a common taller rear access door (wired to door ajar) w/bent D-ring deadbolt type latch. Used for extra long suction hose (up to 14'). | $1,115 |
| 3365-0446 | Single hard suction hose storage (without stops) located in the drivers side upper header. This allows for longer suction hose. Includes a lift-up rear access door (wired to door ajar) w/bent D-ring latch. | $1,535 |
| 3365-0447 | Recessed folding ladder and pike pole storage compartment located officer side just below "T" of the tank. Compartment sized to store a 10' ladder with feet and (2) pike poles. To have a hinged smoothplate door with a thumb latch hinged to open downward tied to door ajar and park brake per NFPA. | $908 |

| Item No. | Description | |
|---|---|---|
| 3365-0451 | (2) 10' pike pole storage tubes. Locate driver side in adjustable tracks with pike pole hooks stored in the up position. Outboard tube to be fitted for a NY hook. | $455 |
| 3365-0454 | Stokes/backboard storage with stops located in the officers side upper header. Includes a lift-up rear access door (wired to door ajar) w/bent D-ring latch. | $1,731 |
| 3365-0455 | Dual hard suction hose storage (without stops) located in the officer side upper header. This allows for longer suction hoses (maximum lenght of 12'). Includes a lift-up rear access door (wired to door ajar) w/bent D-ring latch. | $1,903 |
| 3365-0456 | Storage box on officer side compartment top with an open top access and seatbelt style straps with the buckle end mounted to the top of box. Box will be designed per customer specific requirements. | $1,953 |
| 3365-0457 | Four (4) pike poles and a folding ladder tucked behind ground ladders on the adjustable ladder tracks. | $2,741 |
| 3365-0459 | Box storage rack. Locate in [#LOC]. (2) wide/(2) high. Each compartment to be 8" wide x 10" high. Box to be angled upward in the compartment. No ribbed rubber. | $352 |
| 3365-0460 | Box storage rack. Locate in [#LOC]. (1) wide/(2) high. Each compartment to be 12" wide x 10" high. Box to be angled upward in the compartment. No ribbed rubber. | $304 |
| 3365-0461 | Ladder storage box. Located in the officer side hose bed. Includes vertically hinged door (wired to door ajar) w/push-button latch(es) hose bed style above the ladder storage and nylatron flooring (no partition). Box to hold (1) 24' 2-Section (1) 14' roof (1) 10' attic and (2) pike poles. | $2,690 |
| 3365-0465 | Officer side vertical storage tunnels. For use with low hose bed. Lower Tunnel to hold: 2-section 24` 14` roof 10` attic and (3) pike poles (1) standard (2) with multipurpose hooks (recessed 5" fwd of door). The upper tunnel to have enclosed storage for (1) 10` X 6" hard suction hose with (1) pike pole with multipurpose hook (recessed 5" fwd of door). The area below the hard suction storage for a removable hose tray (not included) for customers "high raise packs" with a stop set at 72" from access opening. Includes vertically hinged rear .188" smooth plate doors with D-ring latch on each door accessible at the rear of body. | $3,212 |
| 3365-0466 | One (1) pike pole and one (1) multipurpose hook and a folding ladder tucked behind ground ladders on the adjustable ladder tracks on the officer's side outside of the hose bed. | $1,160 |
| 3365-0467 | Hard suction storage in hosebed for the following: (3) 6" x 10' hard suction hoses. Includes (2) hosebed divider with squared off upper rear vertically hinged (to swing outboard hosebed area) door with latch (wired to door ajar indicator) and composite material overlay on hosebed flooring. Upper area open and main hosebed cover to be used to cover top area of storage area. Storage located in the center of the hosebed. | $1,663 |
| 3365-0468 | Internal ladder tunnel storage with vertically hinged smooth plate door (wired to door ajar). Access door to be located to the rear of the officer's side body. Storage tunnel capable of holding: (2) 12' Roof (1) 10' Attic (1) 6' roof hook pole (1) 8' pike pole and (1) 10' pike pole. | $2,806 |
| 3365-0469 | Ladder storage through tank for (1) 2-section 24' extension (1) 14' roof (1) 10' attic with feet (2) pike poles and (2) 10' X 6" hard suction hoses. Reduces selected water tank capacity by approximately 450 gallons for pumpers. | $5,666 |
| 3365-0470 | Hard suction Storage Box located in the officer side roof top compartment. The storage to be boxed off inside roof top compartment. Includes vertical hinged smooth plate door painted job color as applicable (wired to door ajar) w/D-ring latch. Storage to hold (2) 6" X 10' hard suction tubes horizontal side by side.. | $2,112 |
| 3365-0471 | Upper hosebed storage area above ladder or storage tunnel on officer side body. Upper storage area to have an open top and run length of the hosebed area. Includes hosebed style flooring and matching rear vinyl or cargo net cover of same style/color as main hosebed. | $1,008 |
| 3365-0472 | Recessed folding ladder and pike pole storage compartment located right rear of body up high. Compartment sized to store a 10' ladder with feet and (3) up to 12' in length pike poles. | $1,386 |
| 3365-0473 | Upper hosebed storage area above driver side compartments. Upper storage area to have an open top and run length of the available hosebed area as optioned. Includes hosebed style flooring. | $1,009 |
| 3365-0474 | Officer side vertical storage tunnel. For use with low hosebed fully enclosed and extended to pump area with drain holes forward in tunnel flooring. Tunnel to hold: 2-Section 24' 14' roof 10' attic and (2) D-Handle pike poles. Includes vertically hinged rear smooth plate door(s) with push-button latch. The attic ladder to be stored below the 2-section and roof ladders. The D-Handle pike poles to be located on the hose bed wall outboard of ground ladders. Ladder tunnel will not extend to top of the body the area above the ladder tunnel to have hosebed style flooring. | $3,481 |
| 3365-0475 | Hard suction storage box vertical over/under. Located in the officer's side hose bed. Includes a swing open door vertical hinged on left side (wired to door ajar) w/trigger latch hose bed style top and flooring. Box to hold (2) 6" x 10' long tubes. | $1,644 |
| 3365-0476 | Ladder Storage Box. Located in the officer side hosebed. The top shall be enclosed using hosebed style top. Includes vert hinged door (wired to door ajar) w/ thumb latch(s). Box to hold (1) one 24' 2-section (1) one 14' roof (1) one 10' folding attic ladder (4) four pike poles and (2) two 6" x 10' hard suction hose above ladders. | $3,151 |

| Item No. | Description | |
|---|---|---|
| 3365-0477 | Hard suction storage box vertical over/under. Located in the driver's side hose bed. Includes a swing open door vertical hinged on right side (wired to door ajar) w/trigger latch hose bed style top and flooring. Box to hold (2) 6" x 10' long tubes (not included). | $1,644 |
| 3365-0478 | Hard suction storage box with strainer storing capacity. Located in the driver side hose bed. Includes a swing open diamond plate door vertically hinged on the right hand side (inboard) and wired to door ajar w/thumb latch(es) diamond plate top and nylatron flooring (no divider). Box to hold [#LOC] tubes with strainer. | $1,644 |
| 3365-0479 | Hardsuction Storage in hosebed for the following: (2) 6" x 10' Hoses. Includes (1) hosebed divider with squared off upper rear vertically hinged (to swing into hosebed area) door with latch (wired to door ajar indicator) and composite material overlay on hosebed flooring. Upper area open and main hosebed cover to be used to cover top area of hardsuction storage area. Storage located to officer of hosebed. | $1,150 |
| 3365-0480 | Hard suction storage in hosebed for the following: (2) 6" x 10' hard suction hoses. Includes (1) hosebed divider with squared off upper rear vertically hinged (to swing outboard hosebed area) door with latch (wired to door ajar indicator) and composite material overlay on hosebed flooring. Upper area open and main hosebed cover to be used to cover top area of storage area. Storage located to officer side of hosebed. | $1,150 |
| 3365-0481 | Zico hydraulic drop down portable tank rack. Rack located to officer of body. Rack sized to be a portable tank 169" long. The control switching to be located officer side rear compartment face with the rack being in full view of the operator during operations. | $6,107 |
| 3365-0482 | The driver side Storage Box to store (2) backboards. Each to be accessed by a vertically hinged diamond plate door with a push-button latch. Door to wired to the door ajar indicator in the cab. | $529 |
| 3365-0483 | Officer side vertical storage tunnel. For use with low hosebed. Tunnel to hold: 2-Section 24' 14' roof 10' folding attic (2) pike poles and (1) backboard. Includes vertically hinged rear smooth plate door (to accommodate graphics/striping) with push-button latch. Upper storage area to have an open top and run full length of the body. Upper area to have hosebed style flooring. | $3,174 |
| 3365-0484 | Recessed folding ladder and pike pole storage compartment located left rear of body up high. Compartment sized to store a 10' ladder with feet and (2) 12' pike poles. | $1,052 |
| 3365-0487 | A bolt on aluminum fabricated sign plate mounted to the exterior vertical surface of the hydraulic ladder lift structure. This shall provide a mounting surface for lights along with an area for graphics. Sign plate shall be painted job color to match the ladder lift. | $785 |
| 3365-0489 | Trash Hook storage compartment located driver side just below hosebed. Compartment sized to store a 10' Trash Hook with D-Handle with smooth plate vertically hinged door and D-Ring latch. | $691 |
| 3365-0492 | Storage box on officer side compartment top with 2 half length side hinged down access doors with 2 butterfly latches per door (wired to door ajar). Box to be approximately 149" long x 12" high x 12" deep without center divider. Storage is for 2.5" DJ hose with nozzle for hi-rise pack remaining extra space for tool storage. With black dri-deck flooring. | $1,400 |
| 3365-0493 | (2) 10' pike pole storage tubes. Locate inboard bottom side of ladder rack on old style adjustable track with pike pole hooks stored in the down position. | $620 |
| 3365-0495 | Storage tunnel capable of holding: (1) Husky brand steel frame 2100 gallon folding tank. Tunnel to be 35" tall by standard width and full length of the available body. Forward end of tunnel to be capped with a removable plate to seal tunnel from debris and a 10.5" wide (minimum or as applicable to tank model) U channel top and bottom centered in tunnel with Nylon pads to be supplied on the bottom. Door to be plate aluminum matching ladder tunnel with push button latch tied to door ajar. Tank storage to be Driver Side Storage Tunnel. | $1,626 |
| 3365-0498 | Storage Tunnel to be completely enclosed to prevent road grime and dust from entering into the storage tunnel. Drain holes shall be provided as applicable for water drainage. | $476 |
| 3365-0501 | Dual hard suction hose storage with stops located in the officer side upper header. Designed to hold (1) 11' and (1) 7' hoses (not included). | $1,867 |
| 3365-0502 | Four (4) pike poles and a folding ladder located under stokes basket module on floor of upper left side body compartment. | $1,160 |
| 3365-0503 | Recessed pike pole storage compartment located [#LOC]. Compartment sized to store (2) pike poles. | $468 |
| 3365-0504 | Three (3) pike poles and a folding ladder tucked behind ground ladders on the adjustable ladder tracks. | $2,741 |
| 3365-0505 | Hard Suction Storage Box. Located horizontal in the drivers side hosebed. Includes vertical hinged door (wired to door ajar) with D-Ring style latches and nylatron flooring. Box to hold two (2) 6" X 10' hard suction hose. | $1,644 |
| 3365-0506 | Hard suction storage box. Located in the officer side hose bed. Includes a swing open door vertical hinged on the right hand side (outboard) and wired to door ajar w/push-button latch(es) hose bed style top and nylatron flooring (no divider). Box to hold two (2) tubes. | $1,644 |
| 3365-0507 | Horizontal stokes basket bracket installed on driver side of hosebed cover for Washington Ferno model 71 stokes basket. Will include aluminum boot and stokes hold down fasteners. | $522 |

| Item No. | Description | |
|---|---|---|
| 3365-0508 | Ladder storage thru tank for (1) 2-section 24' extension (1) 14' roof (1) 10' attic with feet(2) 10' pike poles and (1) Combo step-extension (Duo Safety 300-A) ladder. Ladders shall be stored horizontally. Ladder storage is approximately 270 gallons. | $3,433 |
| 3365-0510 | (2) aluminum pike pole storage tubes. (2) 48" pike pole tubes to be Located just below rearward and across lower B1 compartment top and to extend into L4 and R3 compartments for dealer supplied and installed trash hooks. Dealer is to supply and install required retaining devise for hooks. | $333 |
| 3365-0512 | Hard suction storage box. Located in the driver side hose bed. Includes a swing open diamond plate door vertical hinged on the right hand side (inboard) and wired to door ajar w/push button latch(es) and nylatron flooring. Box to hold one (1) 6" X 10' tube. | $1,167 |
| 3365-0513 | Hard suction storage box. Located in the officer side hose bed. Includes a swing open diamond plate door vertical hinged on the left hand side (inboard) and wired to door ajar w/push button latch(es) and nylatron flooring. Box to hold one (1) 6" X 10' tube. | $1,167 |
| 3365-0514 | Fire extinguisher storage rack to hold (3) extinguishers in a single horz row. Each storage area to be 11" wide x 11" high x 25" deep with a trough in the bottom (same as used in E-ONE wheelwell bottle storage. Bottom and sides of the trough to include ribbed rubber inserts. Each opening to have a vertically mounted strap. Bolt to the bottom of the adjustable shelf in R1 forward end. | $688 |
| 3365-0515 | Full width horizontal storage tunnel between top of tank and below hose bed floor. Tunnel to hold: (3) 10' lengths of 6" hard suction hose side by side on the right side. Includes horizontally hinged drop down rear smooth plate door with bent D-ring latch and bolt-on SS partition protection for water tank fill tower(s). | $2,910 |
| 3365-0517 | Recessed pike pole storage compartment located on the officer side between the upper and lower compartments. Compartment sized to store (1) 6' NY Roof Hook and (1) 6' Drywall Hook. The box to be 5" deep. | $468 |
| 3365-0518 | Fire Extinguisher storage rack. Locate in R2 offset forward. To hold (4) bottles- (2) wide/(2)high. Bottles to be stored angled upward in the compartment. The bottom and sides are to include ribbed rubber inserts. Each storage slot to be 11" wide x 10" high. | $918 |
| 3365-0519 | Upper hosebed storage area above driver side compartments. Upper storage area to have an open top and run length of the available hosebed area as optioned. Includes slotted flooring for storage of 17' Little Giant Ladder with divider set 8.5" leaving 4.25" outboard for customer supplied and installed backboards. Dealer to supply stops for backboards. | $1,395 |
| 3365-0521 | Officer side ladder storage tunnel. Includes area for a vertically stored 35' 3-section' 16' roof and 10' folding ladders plus storage for two (2) standard pike poles. | $1,691 |
| 3365-0522 | Ladder storage box in driver side of hosebed. Dimensions to be 25" wide x 9" high x length of hosebed. Includes ladder stop 66" back from opening and diamond plate drop down door 8" high (1" open space between top of door and top of box) with a D-ring latch (wired to door ajar indicator) and composite material overlay on hosebed flooring. | $1,294 |
| 3365-0523 | Recessed folding ladder and pike pole storage compartment located right rear of body up high. Compartment sized to store a 10' ladder with feet (3) 10' pike poles and (1) 8' "D" handle trash hook. | $1,984 |
| 3365-0524 | Hard suction storage box. Located in the driver side hose bed. No door. Box to hold one (1) 6" X 10' tube below and a slotted smooth plate floor for hose storage above. | $823 |
| 3365-0525 | Recessed folding ladder and pike pole storage compartment located right rear of body. Compartment sized to store a 10' ladder with feet and (3) pike poles. The pike poles shall be (1) 6' (1)8' and (1) 10'. Content lables to be located on access door. | $1,280 |
| 3365-0526 | Storage box located in the officer side ladder tunnel above the attic ladder storage box. To be constructed of .125" aluminum smooth plate x 5" wide x 6" high x 82" long similar to the attic ladder box. Closed end at front. | $328 |
| 3365-0535 | Hard suction storage box. Located in the driver side hose bed. Includes a swing open smooth plate door painted job color vertical hinged on the right hand side (inboard) and wired to door ajar w/"D"-ring latch(es) hose bed style top and nylatron flooring (no divider). Box to hold [#LOC] tubes. | $1,644 |
| 3365-0536 | Hard suction storage box. Located in the officer side hose bed. Includes a swing open diamond plate door vertically hinged on the right hand side (outboard) and wired to door ajar w/"D" ring latch(es) hose bed style top and nylatron flooring (no divider). Box to hold [#LOC] tubes. | $1,644 |
| 3365-0537 | Internal aluminum frame portable tank storage with vertically hinged diamond plate door (wired to door ajar) with a D-ring latch. Access door to be located to the rear of the Driver's side of body. Included is a composite material floor overlay and a tank stop for use with a 2100 gallon aluminum frame portable storage tank. | $761 |

| Item No. | Description | |
|---|---|---|
| 3365-0538 | Ladder storage in hosebed for the following: (1) 20' 2-section extension and (1) 12' roof laddersr (1) 10' folding attic (2) standard 10' pike pole storage tubes and (2) two 4" hard suction hose with small style coupling (10' LENGTH UNLESS NOTED OTHERWISE IN RELEASED ORDER). Extension and roof ladders stored nested above other items in storage box. Includes (1) hosebed divider style side support with squared off upper rear vertically hinged (to swing into hosebed area) door with latch (wired to door ajar indicator) and composite material overlay on hosebed flooring and below ground ladders. Upper area open and main hosebed cover to be used to cover top area of ladder storage area. Storage located to officer's side of hosebed. | $1,305 |
| 3365-0539 | Hard suction storage rack. Locate on the Officer's side adjustable ladder tracks (above ladder brackets if applicable). Includes spring hold downs with scuff plates (as applicable). For use with 15' hard suction hose. | $530 |
| 3365-0543 | Hard suction storage box. Located in the driver side hose bed. Includes a swing open door vertical hinged on the right hand side (inboard) and wired to door ajar w/push-button latch(es) hose bed style top and nylatron flooring (no divider). Box to hold [#LOC] tubes. | $1,644 |
| 3365-0544 | Hosebed Storage Box. Located in the officer side hosebed. Includes drop down door (wired to door ajar) w/push-button latch(es) hosebed style top and nylatron flooring (no divider). Box to hold (1) stokes basket. Includes stop bracket approximately 88" back from opening. Stokes basket 86" long x 24" wide x 8" high. | $1,867 |
| 3365-0545 | Double hard suction hose storage tray. Locate inboard side of overhead ladder rack(s) (1) stacked above the other. Includes (2) securing straps per tray. For use with 10' hard suction hoses. | $1,711 |
| 3365-0546 | 2-Arm Ladder Rack to be painted Sikkens FLNA 4145 Black. | $3,061 |
| 3365-0547 | (2) pairs of pike pole mounting brackets. Locate inboard side of rack for use with customer/dealer supplied pike poles. Brackets to be located so they retain both a standard pike and a D-handle model. Brackets to be P.A.C. TOOLOK. | $365 |
| 3365-0548 | Backboard storage located in upper storage compartment under hose bed to the left of the supplied center divider. A vertical partition is to be located across the front of storage 84 inches deep x available height at door opening approx. 10 inches x available width of 20 inches to center divider. Space to be utilized for storage of backboards. Remaining area to the right of the center supplied divider to have a vertical partition located across the front of storage 100 inches deep and to contain a storage box for a 8' "D"-handle trash hook along with two (2) pike pole tubes for two (2) 8' pike poles with NY hooks. | $1,309 |
| 3365-0549 | One (1) pike pole and two (2) multipurpose hooks and a folding ladder tucked behind ground ladders on the adjustable ladder tracks on the officer's side outside of the hose bed. | $1,160 |
| 3365-0550 | Backboard Storage Box. Located in the officer side hose bed. Includes vertically hinged door (wired to door ajar) w/push-button latch. Box to hold (1) backboard. | $731 |
| 3365-0551 | Triple Hard Suction Storage Rack for 10' hard suction hoses. Driver upper body side. For use with custom style hose hold downs. | $808 |
| 3365-0552 | 2-Arm Ladder Rack to be painted Sikkens FLNA 9550 Dark Grey Metallic. | $3,259 |
| 3365-0553 | Hard suction hose storage tray. Locate on top of Zico drop-down ladder rack. Mount secure straps further outboard to accommodate longer hard suction hose up to 13' in length. | $853 |
| 3365-0554 | Pre-connect removable horizontal U formed divider to be mounted to adjustable aluminum angles attached to Driver side hose bed wall and first and second full length divider in hose bed. Divider(s) to be fabricated from formed .25in thick smooth plate aluminum with DA finish with drainage slots to allow for water shed. Sides of formed divider shall be formed with a bend upwards 2in. to increase rigidity of the divider for hose weight. Each formed divider to be equipped with a Pin (s) with lanyard through side mounting angles to prevent movement of divider in transit. Divider trays when emptied of stored hose shall have a hand hold relief cut in each divider formed pan for ease of removal once unloaded. Side angles shall be located on the divider (s) and side wall of hose bed as applicable to position the divider approximately 21 in. above the hose bed level. This to allow for 2 vertical stacked hose storage areas to accommodate hose lays below at bed level and additional above | $1,958 |
| 3365-0555 | Officer side vertical storage tunnel. For use with low hose bed. Tunnel to hold: 2-Section 24ft 14ft roof 10ft attic (1) back board and (4) pike poles. Includes vertical hinged rear smooth plate door matching rear body finish with push-button latch. Upper storage area to have an open top and run full length of the body. Upper area to have hose bed style flooring. | $3,273 |
| 3365-0559 | Zico pike pole mounting brackets (PR). Locate inside forward transverse area in E-MAX module forward of stokes basket storage. May limit/omit back board storage at this location. To store short 6ft poles in upper module transverse. ZICO parts PPMB-AA and PPMB-BB. These are the brackets only and will not include any tubes or pike poles. | $173 |
| 3365-0560 | Storage box located [#LOC]. Content of the storage to be vertically stacked and include a vertically hinged door w/D-Ring style latch (thumb latch if space is restricted). The box is to be the full length of the available hose bed and include stop(s) as needed for storage content. | $1,644 |
| 3365-0561 | Pike pole tubes. Provide (2) tubes to accommodate Fire Hooks Unlimited New York Hook Model RH-6 pike pole storage. Locate: Pump module upper transverse area on driver side. | $710 |

| Item No. | Description | |
|---|---|---|
| 3365-0562 | Pike pole tubes. Provide (2) tubes to accommodate Fire Hooks Unlimited New York Hook Model RH-6 pike pole storage. Locate: Pump module upper transverse area on officer side. | $710 |
| 3365-0564 | Hard Suction Storage Rack Double side by side 2.5" or 3.0" hard tubes. Drivers side in adjustable track above ladders and or other track mounted options (if applicable). Includes NFPA retaining strap(s). To hold (2) 2.5" or 3.0" x 10' long hard tubes on a side by side double tray. | $768 |
| 3365-0565 | Hard suction storage box smooth plate side wall construction painted job color. Located on the [#LOC]. Includes vertically hinged door(s) (wired to door ajar) w/D-Ring latch(s). Compartments are to extend to the back side of the L2 compartment and to be approximately the same height as L1 L2 compartments. Lower two (2) box compartments to have stops to accommodate 10' suction hose. Third compartment to have stops to accommodate 10' pike pole with D style handles. Uppermost compartment to have stops to accommodate 6' pike poles with D style handles. | $1,644 |
| 3365-0568 | The storage box located [#LOC] to have hosebed style top. | $176 |
| 3365-0571 | Ladder storage through tank for (1) 2-section 28' extension (1) 16' roof (1) 10' attic with feet and (2) pike poles. Reduces selected water tank capacity by approximately 300 gallons for pumpers and 350 gallons for tankers. | $2,917 |
| 3365-0572 | Officer side Combination tunnel upper compartment Contents: (2) 6" x 10' hard suction hoses (not included) stored vertical. Includes necessary plate work and bolt in removable floors between tubes as stored with end stops to prevent the tube from sliding forward into body during transit. Includes Nylatron or similar flooring material to ease deployment of hoses. | $1,006 |
| 3365-0573 | Recessed folding ladder and pike pole storage compartment located at rear of apparatus officer side under "T" of tank. Compartment sized to store a 10' ladder with feet and (3) pike poles positioned with tubes on center for double side headed pike poles NY style or similar. | $958 |
| 3365-0575 | Portable storage tank in hosebed for the following: 2100 gallon aluminum frame tank. Includes (2) hosebed divider with squared off upper rear vertically hinged (to swing into hosebed area) door with latch (wired to door ajar indicator) and composite material overlay on hosebed flooring. Upper area open and main hosebed cover to be used to cover top area of storage area. Storage located 5" from the officer side hosebed side. | $1,663 |
| 3365-0577 | Left hosebed horizontal tunnel. For use with low hose bed. Tunnel to hold: 24' 2-Section 14' roof ladder and 10' attic. Includes horizontal top hinged rear diamond plate door(s) with bent D-ring latch. Open storage space on left side for additional long handle tool storage. | $2,069 |
| 3365-0578 | Ladder storage thru tank for (1) 2-section (1) 14' roof (1) 10' attic with feet and (2) pike poles. Includes horizontally hinged lift up door with Bent D-Ring latch (wired to door ajar indicator). Reduces selected water tank capacity by approximately 250 gallons. | $2,996 |
| 3365-0580 | Driver side vertical storage tunnel behind reduced upper depth left side compartments. Tunnel to hold: up to (2) 10' lengths of 6" hard suction hose. Includes vertically hinged rear smooth plate door with bent D-ring latch. | $1,899 |
| 3365-0581 | Officer side vertical storage tunnel behind right side upper compartments. Tunnel to hold: up to a 24' 2-section and 14' roof up to (3) pike poles and a folding ladder. Includes a vertically hinged rear smooth plate door with bent D-ring latch and a gas tube hold-open. | $2,208 |
| 3365-0585 | Ladder storage through tank for (1) 2-section 28' extension (1) 16' roof (1) 10' attic with feet and (2) pike poles. Reduces selected water tank capacity by approximately 250 gallons for pumpers and 300 gallons for tankers or large water tank pumper applications. | $2,917 |
| 3365-0586 | Hard Suction Storage Box Drivers side. Located in the driver's side of the hose bed. Includes a vertically hinged (to swing into hosebed area) door with thumb latch (wired to door ajar indicator) and composite material overlay. Box to hold (1)one 6" x 15' long hard suction hose (outboard) and (1)one 4" x 10' long hose (inboard). The closed end of box shall be built to help deflect the main hose load inboard around the shorter hard suction hose length. The hard suction storage area to be open top style with the main hose bed cover used to cover both the hard suction box and main hose bed area. | $1,622 |
| 3365-0587 | Hard Suction Storage Box Officers side. Located in the officer's side of the hose bed. Includes a vertically hinged (to swing into hosebed area) door with thumb latch (wired to door ajar indicator) and composite material overlay. Box to hold (1)one 6" x 15' long hard suction hose (outboard) and (1)one 4" x 10' long hose (inboard). The closed end of box shall be built to help deflect the main hose load inboard around the shorter hard suction hose length. The hard suction storage area to be open top style with the main hose bed cover used to cover both the hard suction box and main hose bed area. | $1,622 |
| 3365-0588 | The storage box located [#LOC] to have a fully enclosed top. | $176 |
| 3365-0589 | Double hard suction storage rack. Two (2) racks side by side mounted to adjustable bracket. Driver side in ladder track. Includes securing strap to keep in place. Rack shall accommodate 4" hard suction hose. | $920 |

| Item No. | Description | |
|---|---|---|
| 3365-0590 | Storage box recessed into rear body officer side above side compartment ceiling for (1) 6in diameter X minimum 10ft. length of hard suction hose. (max hose length determined by available body length) Includes vertical hinged door (matching rear body) with D-ring latch (wired to door ajar indicator). Not available with rear of body plumbing discharges or other options requiring piping to route to pump in same location. | $648 |
| 3365-0591 | Storage box recessed into rear body driver side above side compartment ceiling for (1) 6in diameter X minimum 10ft. length of hard suction hose. (max hose length determined by available body length) Includes vertical hinged door (matching rear body) with D-ring latch (wired to door ajar indicator). Not available with rear of body plumbing discharges or other options requiring piping to route to pump in same location. | $648 |
| 3365-0599 | Officer side Combination tunnel upper compartment Contents: (1) 6" x 10' hard suction hose (not included) stored in upper tunnel. Includes necessary plate work and bolt in removable floor between tube and lower tunnel as stored with end stops to prevent the tube from sliding forward into body during transit. Includes Nylatron or similar flooring material to ease deployment of hose. | $574 |
| 3365-0600 | Officer side vertical storage tunnel. For use with low hose bed. Tunnel to hold: [#LOC]. Includes vertical hinged rear diamond plate door(s) with bent D-Ring latch. | $2,069 |
| 3365-0601 | Hard Suction Storage Box Horz. Located in the [#LOC] hose bed. Includes vertical hinged aluminum smooth plate DA finish door (wired to door ajar) w/D-ring style latch and nylatron flooring. Top of box to feature hose bed slat flooring to accommodate storage of additional hose above the box as applicable per hose bed available depth. Box to hold (2) 10' hard suction hoses horizontal positioned side by side. | $1,731 |
| 3365-0602 | Hard Suction Storage Rack. Driver side raised above the compartment top. Includes spring hold downs and scuff plates behind spring mounts (as applicable). Rack to include brackets on hose bed side to raise the hard tube above compartment top to clear optioned scene lights or similar equipment mounted on compartment top. | $444 |
| 3365-0603 | Storage box for (1) Fresno ladder model 14-701. Aluminum with job color painted finish located behind the ground ladders on the officer's outside of the body. Box will be open at the rear and include nylon strap(s) to secure the ladder during transit. | $1,462 |
| 3365-0604 | Storage tunnel to be completely enclosed to prevent road grime dust water or snow from entering into the storage tunnel. | $714 |
| 3365-0605 | Hosebed storage box. Includes hinged raised compartment lid with turn latches and grab handle(s) wired to door ajar indicator in cab. Includes LED light that shall illuminate when the lid is in the open position. | $935 |
| 3365-0606 | Internal ladder tunnel storage with vertically hinged smooth plate door (wired to door ajar). Access door to be located to the rear of the officer's side body. Storage tunnel capable of holding: (1) 2-Section (1) Roof (1) Attic (2) pike poles. | $2,806 |
| 3365-0607 | Hard Suction Storage Box Vert. Located in the hosebed as specified in hose load table between lays of hose. Includes vertical hinged diamond plate door (wired to door ajar) w/push-button latch and nylon flooring. Box to hold two (2) 6in x 10ft. hard suction hoses and two (2) 3in. X 10ft. hard suction hoses vertical stacked. Both sides of the storage box shall be hosebed dividers full available height and length as applicable per location. | $2,470 |
| 3365-0609 | Hard suction storage boxes welded one each side to upper body hose bed side sheets to be painted as applicable. Includes vertically hinged brushed stainless steel rear access doors and aluminum hose trays without forward travel limit stops to allow storage for longer hose. Maximum hose length is 11'-6". Requires minimum 88" high body. | $2,707 |
| 3365-0612 | The ladder storage shall be designed so that the ground ladders shall be not be nested and can be individually removed. | $497 |
| 3365-0615 | Pre-connect storage horizontal divider to be attached to hose bed side wall hinged to outboard side on each outer lay in hose bed. Divider to be fabricated from .25in thick smooth plate aluminum with drainage slots to allow for water shed w/staked stainless steel hinge to allow for loading in the lower lay when the divider is in the open position. Divider inboard of divided hose bed storage to have an angle mounted for the hinged divider to rest upon when in loaded position. This to allow for 2 vertical stacked hose storage areas to accommodate (2)double stack 2.5in. DJ lays on each side of hose bed to fit 200ft of hose in each lay upper and lower. Upper lay to be pre connected and the lower lay to be a dry lay for additional hose if need arises on scene. Main hose bed vertical dividers added separately to order. Locate one divider in the driver side first lay area and the other in the officer side last lay area of the hose bed. | $455 |
| 3365-0616 | (1) pike pole storage tube. Locate inboard side of ladder rack with pike pole hook stored in the up position or as applicable to hook. | $277 |
| 3365-0617 | Officer side vertical storage tunnel. For use with low hose bed. Tunnel to hold: [#LOC]. Includes vertically hinged rear smooth plate door(s) with D-Ring latch. | $2,069 |
| 3365-0618 | Storage box for (2) two 12' length of hard suction hose. Includes vertically hinged door with latch (wired to door ajar indicator). Locate to drivers side below "T" of tank. | $1,306 |

| Item No. | Description | |
|---|---|---|
| 3365-0619 | Four (4) pike poles and a folding ladder tucked behind ground ladders on the adjustable ladder tracks. The bottom two (2) are standard pike poles and the upper two (2) are roof hook pike poles. The rear end of the pike pols to be 2" short of the end of the body side. | $1,160 |
| 3365-0620 | Backboard Storage Box adjustable and mounted horizontally located in the hose bed. Includes horizontally hinged drop down door (wired to door ajar) w/push-button latches. Box to hold (1) backboard. The storage box opening shall be 3" high x 20" wide and a stop at 76" deep. The box to be full length of the hosebed. | $731 |
| 3365-0623 | Thru tank for (1) 5in. x 8ft. jet dump discharge hose with elbow and 2 ft. drop pipe. For use with Jet Dump and Folding drop tank. Reduces selected water tank capacity by 40 gallons. To include a storage bracket to accommodate horizontal positioning of the elbow pipe above jet dump and tank fills in B1. Bracket to be attached to compartment wall and shall be .25 in. thick and have a rounded notch in the top side for the dump pipe to rest in with a strap with nylon buckle attached to rear wall above and below pipe as stowed to secure the pipe for transit. | $2,354 |
| 3365-0626 | The [#LOC] door(s) shall have [#COL] latch(es). | $1,644 |
| 3365-0632 | The driver side of the upper rear body panel area shall have a storage area for one (1) standard backboard stored vertically. Board to be industry standard backboard size of 72" long x 17" wide x 3" high. This area shall also retain a folding 6 foot 'A' frame ladder 24" wide x 7" high. Both ladder and back boards are customer supplied. Includes a rear facing smooth aluminum vertically hinged access door with stainless steel bent D-ring latch. | $1,944 |
| 3365-0633 | Hard suction storage racks. Located in the drivers and officer's side hose outer beds. Forward section of hose to be under the upper water tank cover. Nylon buckle strap assemblies installed at the rear openings. Each to hold (1) 6" x 10' long tube. | $1,447 |
| 3365-0634 | Recessed pike pole storage compartment located right rear of body up high at hose bed level under roof top compartments. Compartment sized to store (4) 10' pike poles. Not available if reels are optioned in roof top compartments with cord or hoses deployed in compartments below. | $970 |
| 3365-0635 | Hard suction storage box horizontal side by side. Located in the driver's side hose bed. Includes drop down smooth plate door (wired to door ajar) w/bent D-ring latch hose bed style top and flooring. Box to hold (2) 6" x 10' long tubes. | $1,644 |
| 3365-0636 | Officer side vertical storage tunnel. For use with low hose bed. Tunnel to hold: [#LOC]. Includes vertical hinged rear smooth plate door(s) with stainless steel bent D-ring latch. | $2,069 |
| 3365-0637 | Two (2) multipurpose hooks and a folding ladder tucked behind ground ladders on the adjustable ladder tracks on the officer's side outside of the hose bed. | $1,160 |
| 3365-0638 | Officer side vertical storage tunnel behind reduced upper depth right side compartments. Tunnel to hold: 24' 2-section and 14' roof plus (2) pike poles and a folding ladder and STD backboard. Includes vertically hinged rear smooth plate door with bent D-ring latch. | $2,193 |
| 3365-0640 | Recessed folding ladder and pike pole storage compartment located right rear of body up high. Compartment sized to store a 10' ladder with feet and (3) up to 12' in length pike poles. | $1,386 |
| 3365-0641 | A bolt on aluminum fabricated sign plate approx 19.75" X 187 mounted to the exterior vertical surface of the hydraulic ladder rack. This shall provide a mounting surface for lights along with an area for graphics. Sign plate shall be painted job color. | $1,003 |
| 3365-0642 | Ladder tunnel. Located at frame height in B1 offset to the officer side. Ladders stored on-beam. Includes chain retention assembly. | $3,133 |
| 3365-0643 | One (1) multipurpose hook and a folding ladder above ground ladders on the adjustable ladder tracks on the officer's side outside of the hose bed. The aluminum tube for the hook will be welded to the mounting bracket in lieu of a clamp. | $925 |
| 3365-0644 | Dual hold down brackets to secure a 2-section extension and roof ladder. Includes an additional full height Unistrut channel. | $255 |
| 3365-0645 | A pair of PAC TRAC positive locking brackets for a D handle pike pole. Locate outboard side of rack | $320 |
| 3365-0647 | (4) aluminum pike pole storage tubes. (4) 48" pike pole tubes to be located just below full depth compartment ceiling of L3/B1/R2 rearward and horizontally mounted (2) each side offset from the other (2) for dealer supplied and installed trash hooks. End of each tube to be 6" in from inside door opening. Dealer is to supply and install required retaining devise for hooks. | $665 |
| 3365-0648 | Hard suction storage thru tank for (4) 6" x 10' hard suction hoses. Includes a smooth plate horizontal drop down hinged door wired to door ajar with push button latch. Reduces selected water tank capacity by approximately 250 gallons. | $2,714 |
| 3365-0649 | Storage box w/center divider for (2) two equal lengths of 6" hard suction hose(s) length of hose shall vary w/overall length of box. Each end of the box shall include a vertically hinged swing-out door with push-button latch (wired to the door ajar). The box and doors shall be smooth aluminum plate and painted job color. The storage box shall be located on driver side compartment top and be as long as the compartment top surface shall permit. | $1,116 |
| 3365-0650 | Storage box on driver side compartment top with an open top access and seatbelt style straps with the buckle end mounted to the top of box. Box will be designed per customer specific requirements. | $1,953 |

| Item No. | Description | |
|---|---|---|
| 3365-0651 | Fire extinguisher storage rack to hold (2) extinguishers in a single horz row. Each storage area to be 11" wide x 11" high x 25" deep with a trough in the bottom (same as used in E-ONE wheelwell bottle storage. Bottom and sides of the trough to include ribbed rubber inserts. Each opening to have a vertically mounted strap. Rack to be mounted to the compartment top below off set in R1 off set forward. | $459 |
| 3365-0652 | (2) D-handle pike pole storage tubes 8' on length. Locate inboard side of ladder rack with pike pole hooks stored in the up position. | $523 |
| 3365-0657 | SCBA/Fire Extinguisher storage. Locate in [#LOC]. To hold (6) bottles floor mounted. There shall be a permanent shelf located 8" off of floor. Space below shall be have 6 equally spaced openings. | $729 |
| 3365-0661 | Zico pike pole mounting brackets (PR). Locate inside transverse area in E-MAX module beneath the stokes basket storage. May limit/omit storage at this location. ZICO parts PPMB-AA and PPMB-BB. These are the brackets only and will not include any tubes or pike poles. | $173 |
| 3365-0662 | Storage for (1) 8' Dry Wall pike pole. Located in rear storage area. | $313 |
| 3365-0666 | Fire extinguisher storage rack to hold (3) extinguishers in a single horizontal row. Each storage area to be 11" wide x 11" high x 25" deep with a trough in the bottom (same as used in E-ONE wheelwell bottle storage. Bottom and sides of the trough to include ribbed rubber inserts. Each opening to have a vertically mounted strap. Loc: R1 | $688 |
| 3365-0667 | SCBA/Fire Extinguisher storage rack. Locate in [#LOC]. To hold (6) bottles- (1)wide/(6)high. Bottles to be stored angled upward in the compartment. The bottom and sides are to include ribbed rubber inserts. | $525 |
| 3365-0668 | Ladder storage thru tank for (1) 3-section 24' extension (1) 12' roof (1) 10' attic with feet and (2) pike poles. Reduces selected water tank capacity by approximately 300 gallons. | $3,177 |
| 3365-0669 | Pike pole storage box. Located in the officer side of the hose bed (full length). Includes vertically hinged door (wired to door ajar) w/push-button latch. Box to hold: (3) 10' pike poles(NY hooks). | $1,159 |
| 3365-0671 | Storage box removable bolt-in located in the [#LOC] hose bed. Includes smooth plate sanded sides and interior and (2) two diamond plate lids per box with raised water lip lids(wired to door ajar) w/D-ring latches and applicable lighting and hold open shocks. Box to feature an adjustable divider in the forward area of the box to hold 3-4 5 gallon foam buckets per box in place during transit. Remaining area rearward of foam pail storage to be open storage. | $2,855 |
| 3365-0672 | Zico LAS-XT electric drop-down ladder rack. Rack located to officer side of body. The control switching to be located on the side pump panel with the rack being in full view of the operator during operations. | $5,961 |
| 3365-0679 | Portable tank storage compartment recessed into center of water tank for (1) 2100 gallon portable tank. Forward portion to include stop for portable tank. Includes lift up smooth plate door with Bent-D ring latch located above the B1 compartment. Reduces water capacity by approximately 120 gallons. Porta-tank not included. | $3,225 |
| 3365-0683 | Hard suction storage box welded left side to upper body hose bed side sheet for dual vertically stacked 10' hose. Painted as applicable. Includes vertically hinged smooth aluminum rear access door and aluminum hose trays with forward travel limit stops. Requires minimum 93" high pumper body. | $2,219 |
| 3365-0686 | Overhead Zico storage rack door modification: The gas shock shall be mounted in such a way that it would be capable of being removed from the outside of the apparatus with the door in up or down position. | $214 |
| 3365-0688 | Storage box located [#LOC]. Content of the storage to be horizontal and include a horizontaly hinged door w/D-Ring style latch (thumb latch if space is restricted). The box is to be the full length of the available hose bed and include stop(s) as needed for storage content. | $1,644 |
| 3365-0690 | Officer side vertical storage tunnel. For use with low hose bed. Tunnel to hold: (1) 2-section 20' ladder and (2) backboards. Includes vertical hinged rear boxed out smooth plate door(s) with push-button latch. Includes upper hose bed style flooring. | $2,069 |
| 3365-0695 | A pair of PAC TRAC positive locking brackets for a D handle pike pole. Locate inboard side of rack | $320 |
| 3365-0698 | Upper hosebed storage area above driver side compartments as applicable. Upper storage area to have an open top and run length of the hosebed area. Includes hosebed style flooring. | $1,008 |
| 3365-0699 | Hard Suction Storage Rack. Driver side on top of Zico drop down rack. Includes spring hold downs and scuff plates behind spring mounts (as applicable). | $404 |
| 3365-0700 | Double Hard Suction Storage Rack for 15' hard suction hoses. Driver side compartment top. Includes spring hold downs with scuff plates (as applicable) | $1,152 |
| 3365-0701 | Hard Suction storage driver side compartment top. Includes diamond plate boot at forward compartment top for hard suction hose end . | $269 |
| 3370-0023 | Tracks for adjustable shelf and/or adjustable tray in single depth or rescue style single depth compartment. Location: [#LOC]. | $194 |
| 3370-0025 | Shelf permanent shelf. Locate in [#LOC]. | $102 |
| 3370-0026 | Adjustable shelf. For compartments that are full height/full depth or lower compartments with full depth. Location: [#LOC]. | $251 |

| Item No. | Description | |
|---|---|---|
| 3370-0027 | Tracks for adjustable shelf and/or adjustable tray in the lower area of the compartment. Location: [#LOC]. | $99 |
| 3370-0028 | Tracks for adjustable shelf and/or adjustable tray in the upper area of the compartment. Location: [#LOC]. | $54 |
| 3370-0029 | Adjustable shelf. For compartments with upper shallow depth. Location: [#LOC]. | $128 |
| 3370-0032 | Upper shelf floor overlays. Includes 1/8" smooth plate full width and length of shelf and spaced .5" off shelf floor. Locate: (2) L1 (2) L3 (2) R1 (2) R3 and (1) over top of L1 tool box. | $1,149 |
| 3370-0033 | Adjustable shelf modification for shelf to have 1" lips. Location: B1 upper shelf. | $114 |
| 3370-0034 | Shelf adj full transverse. Locate in [#LOC]. | $513 |
| 3370-0035 | Shelf adjustable 1/2 depth in transverse compartment. Locate in [#LOC]. | $409 |
| 3370-0037 | Horizontal track(s) in the upper area of the compartment. Location: [#LOC]. | $77 |
| 3370-0039 | Adjustable shelf. For upper area of compartments with multiple depths. Location: [#LOC]. | $251 |
| 3370-0040 | Adjustable shelf for single depth or rescue style single depth compartment. Location: [#LOC]. | $251 |
| 3370-0046 | Adjustable shelf. Shelf to be notched into extended side compartment area. For compartments with upper shallow depth. Location: R3 upper. | $480 |
| 3370-0048 | Adjustable shelf with 2" lips around entire shelf. For compartments that are full height/full depth or lower compartments with full depth. Location: [#LOC]. | $538 |
| 3370-0050 | Tracks for adjustable shelf and/or adjustable tray in transverse compartment. Location: B1. | $383 |
| 3370-0051 | Tracks for adjustable shelf and/or adjustable tray in 1/2 or 2/3rds depth of transverse compartment. Location: [#LOC]. | $291 |
| 3370-0052 | Adjustable shelf (J-Style) for non-transverse compartments 16" or greater in depth. Location: [#LOC]. | $251 |
| 3370-0053 | Adjustable shelf (C-Style) for non-transverse compartments up to 15.99" in depth. Location: [#LOC]. | $128 |
| 3370-0054 | Tracks for adjustable shelf and/or adjustable tray in compartments 16" or greater in depth. Location: [#LOC]. | $194 |
| 3370-0055 | Tracks for adjustable shelf in shallow compartments up to 15.99" deep. Location: [#LOC]. | $99 |
| 3370-0056 | Tracks for adjustable shelf and/or adjustable tray in compartments 16" or greater in depth. Tracks to run from floor to just below compartment offset/ceiling. Location: [#LOC]. | $194 |
| 3370-0057 | Tracks for adjustable shelf in shallow compartments up to 15.99" deep. Tracks to run from floor/compartment offset tube to just below compartment ceiling. Location: [#LOC]. | $99 |
| 3370-0063 | Tracks for electrical cord reel in the upper area of the compartment. Location: [#LOC]. | $98 |
| 3370-0064 | Adjustable shelf with 2" lips around entire shelf. Location: L3 upper shelves to foward area of compartment only. | $538 |
| 3370-0065 | Tracks for adjustable shelf and/or adjustable tray in single depth or rescue style single depth compartment. Position tracks within compartment for optimal adjustability. Track height from floor and/or ceiling may be impacted by other items located within the compartment or by general body construction. Location: [#LOC]. | $194 |
| 3370-0119 | Fixed shelf with 1" front lip. For non-transverse compartments that are 16" or greater in depth. Location: B1 mounted 9" below roll-up door drum angles to be only as large as needed. | $251 |
| 3370-0127 | Permanent shelf. Locate in R1 just above the Zico bottle racks. Front lip of shelf to be bent down. | $173 |
| 3370-0128 | Permanent shelf. Locate in B1 just above the booster reel. Front lip of shelf to be bent down. | $173 |
| 3370-0129 | Shelf 1/2 depth in transverse compartment. Rear lip to be 4" high. Locate in [#LOC]. | $442 |
| 3370-0132 | Bolt in shelf. Locate in roof top compartment driver's side just above the air bottle forward roof top compartment. | $173 |
| 3370-0133 | Tracks shall be provided for use with adjustable shelves and/or trays. The tracks shall align for use of a shallow depth adjustable shelf(s) and/or adjustable tray(s). The tracks shall be ran from floor to ceiling to allow the shallow depth adjustable shelf/tray to have full compartment height adjustability. Position tracks within compartment for optimal adjustability. The tracks as installed from floor to ceiling may be impacted by other items located within the compartment; tracks may be cut and continued again as required to provide full height adjustability. The tracks shall be vertically mounted and attached to the side and/or rear walls of the compartments. Location: [#LOC]. | $194 |
| 3370-0134 | Permanent shelf to have 1" lips. Location: [#LOC]. | $114 |
| 3370-0138 | Permanent shelf. Locate in L1 just above the CAFS foam system components. Front lip of shelf to be bent down. | $173 |
| 3370-0140 | The R2 Compartment shall include Unistrut. (1) Piece each side centered and (4) on back wall evenly spaced. | $355 |
| 3370-0142 | Permanent shelf for Hurst power unit. Locate on forward bulkhead high as possible [#LOC]. | $695 |
| 3370-0144 | Permanent shelf bolt in suspended from ceiling and forward in compartment. Locate in [#LOC]. | $306 |
| 3370-0145 | Adjustable shelf modification for shelf to have 1" lips. Location: B1 lower shelf. | $114 |
| 3370-0146 | The interior shall include adjustable track extrusion horizontally on interior side walls from the front wall of the body to the forward walls of the L2/R2 compartments. Locate (1) at 24" above the floor and the (1) at 42" above the floor. | $355 |
| 3370-0148 | TBD. | $251 |

| Item No. | Description | |
|---|---|---|
| 3370-0149 | Adjustable shelf. For non-transverse compartments that are 16" or greater in depth. The shelf shall have a minimum 2" front rear and side lips. Location: [#LOC]. | $276 |
| 3370-0152 | Fixed shelf with 1/2" front lip. For non-transverse compartments that are 16" or greater in depth. Location: L1 mounted 10" above floor full width of compartment. | $251 |
| 3370-0154 | Adjustable shelf with 2" lips around entire shelf. For compartments that are shallow up to 15.99" depth. Location: [#LOC]. | $237 |
| 3370-0157 | Adjustable "C" style shelf. For non-transverse compartments that are 16" or greater in depth. Location: [#LOC]. | $251 |
| 3370-0158 | Tracks on rear wall of compartment for equipment mounting. Three (3) aluminum adjustable shelf tracks shall be vertical mounted on the rear wall of the L2 compartment over rear wheel. Tracks shall be located forward and rearward offset from compartment walls 4 inches in the compartment and one centered in the compartment. Tracks shall be for mounting customer equipement and shall not have any shelves included. | $161 |
| 3370-0161 | Stainless steel adjustable shelf. For non-transverse compartments that are 16" or greater in depth. Location: [#LOC]. | $300 |
| 3370-0162 | Stainless steel adjustable shelf. For non-transverse compartments that are up to 15.99" deep. Location: [#LOC]. | $154 |
| 3370-0163 | Fixed shelf [#LOC] compartment. Locate just above compartment optioned reel toolbox storage box or similar floor mounted option. | $178 |
| 3370-0167 | Mount two (2) pieces of shelf track horizontal from front to back on the back wall for attaching SCBA air bottle brackts to. Use old style adjustable track part # 273490. Locate [#LOC]. | $227 |
| 3370-0168 | Smooth plate boxed aluminum fixed shelf shall be provided for booster reel mounted high in the B1 compartment. To include cross structure extrusions thru compartment side to side under reel. | $383 |
| 3370-0171 | Compartment R2 to have an "L" shaped shelf bolted to the ceiling and front wall to support the (8) air bottle storage. | $324 |
| 3370-0172 | Adjustable shelf (J-Style) for non-transverse compartments 16 in. or greater in depth. Shelf to be partial depth and extend from back wall 18in. or as applicable per compartment depth options. Design to offset attach to standard location adjustable tracks and relief notch as needed to adjust at breaker box or similar compartment mounted options.. Location: [#LOC]. | $251 |
| 3370-0175 | Fixed corner shelves with 1" front and side lip. For non-transverse compartments that are 16" or greater in depth. Location: L3 mounted (1) each side for (1) gal fuel cans. | $278 |
| 3370-0177 | Fixed hanging shelf without front lip. For non-transverse compartments that are 16" or greater in depth. 30" wide x 5" high x 24" deep. Includes nylon buckle strap assembly vertically across the center of the opening. Location: R3 mounted rearward at the ceiling of the full depth compartment area. | $251 |
| 3370-0178 | Permanent shelf. Locate in L3 approximately 1/2 depth of compartment even with bottom of lower 3x3 extrusion at turntable access panel on back wall. | $91 |
| 3370-0179 | All adjustable and fixed shelves to be extended outboard towards door opening and inboard towards back wall as far as possible. Note outboard corners may require notching for compartment track lighting (if applicable). | $394 |
| 3370-0181 | Fixed shelf with 1" front lip. For non-transverse compartments that are 16" or greater in depth. Location: L2 mounted above air bag module full width of compartment. | $251 |
| 3370-0182 | Permanent shelf bolt in and full transverse mounted located above the upper transverse Speedlay assembly as low as the speedlay plumbing and tray will allow. | $306 |
| 3370-0185 | Permanent shelf. Locate in L3. Front lip of shelf to be bent down. | $173 |
| 3370-0187 | Permanent shelf. Locate in R1. Locate the shelf to bottom of the rear suction cover box.. | $102 |
| 3370-0188 | All shelves adjustable and permanent to have 4" lips IPOS. | $411 |
| 3370-0189 | Adjustable shelf with inverted for mounting of adjustable trays due to the gear box cover for the ladder rack. For compartments that are full height/full depth or lower compartments with full depth. Location: L1. | $251 |
| 3370-0190 | Permanent shelf. Locate in Battery compartment. Height to be approximately 2" above chassis batteries. | $102 |
| 3370-0191 | Adjustable shelf (C-Style) tilted at 45 degrees (inboard edge tilted up) for mounting miscellaneous tools. Includes fixed mounted peg toolboard attached to shelf for tools to mount too. Toolboard to be spaced off shelf a half inch. Location: [#LOC]. | $447 |
| 3370-0192 | Permanent shelf bolt in and full transverse mounted located in L1/R1 just above breaker box. | $306 |
| 3370-0193 | Adjustable shelf (C-Style) for non-transverse compartments up to 15.99" in depth. Shelf to be half the width of the compartment. Location: [#LOC]. | $128 |
| 3370-0196 | Adjustable shelf for non-transverse compartment. Location: [#LOC]. | $251 |
| 3370-0198 | Permanent shelf. Locate in [#LOC]. | $102 |
| 3370-0199 | Vertically mounted tracks for adjustable shelves and/or trays for non-transverse compartment [#LOC]. | $194 |
| 3370-0202 | Adjustable shelf for non-transverse compartment. The shelf shall have inverted lips. Location: [#LOC]. | $251 |

| Item No. | Description | |
|---|---|---|
| 3370-0206 | Permanent mounted shelf for non-transverse compartment. The shelf shall have inverted lips. Location: [#LOC]. | $251 |
| 3370-0214 | Tracks for adjustable shelf in shallow compartments up to 15.99" deep. Location: [#LOC]. | $194 |
| 3370-0215 | Adjustable shelf (C-Style) for non-transverse compartments up to 15.99" in depth. For shelf tracks mounted on front and rear side compartment walls. Location: [#LOC]. | $255 |
| 3380-0014 | Roll-out generator tray. Includes tray interlock. Locate [#LOC]. | $812 |
| 3380-0015 | Fixed back wall mounted toolboard. Toolboard to be spaced off wall a half inch. Location(s): [#LOC]. | $226 |
| 3380-0017 | Floor mounted slide master roll-out/tilt down tray. Single depth. Mount on [#LOC] floor. | $1,143 |
| 3380-0018 | Adjustable roll-out toolboard. Includes upper and lower adjustable track with 250 lbs. slides and gas shock actuated. Toolboard sized to compartment height and depth as applicable. Location(s): [#LOC]. | $840 |
| 3380-0019 | Running board suction tray. Includes removable slats in bottom of tray. Location(s): [#LOC] | $535 |
| 3380-0021 | Hard suction hose storage tray. Locate on inboard side of overhead ladder rack. Includes (2) securing straps. | $427 |
| 3380-0022 | Floor mounted roll-out tray. Includes 500lbs. tray capacity. Location: [#LOC]. | $890 |
| 3380-0023 | Adjustable mounted roll-out/tilt-down tray. Location(s): [#LOC]. For use in single depth or rescue style compartments. | $1,445 |
| 3380-0024 | Adjustable mounted roll-out tray. Includes 250 lbs tray capacity. Location(s): [#LOC] | $980 |
| 3380-0025 | Adjustable mounted roll-out tray. Includes 500 lbs tray capacity. Location(s): [#LOC] | $1,190 |
| 3380-0027 | Floor mounted SlideMaster with tray. Model SM3-SP. Single depth. Mount on [#LOC] floor. | $916 |
| 3380-0028 | Adjustable mounted Slide Master with tray. Model SM3-SP. Single depth. Location(s): [#LOC] | $1,213 |
| 3380-0029 | Floor mounted Bi-Directional Slide Master with tray. Model SM2-D-SP. Mounted on [#LOC]. | $1,577 |
| 3380-0030 | Adjustable mounted bi-directional Slide Master with tray. Model SM2-D-SP. Mounted in transverse area of [#LOC]. | $1,874 |
| 3380-0033 | Hard suction hose storage tray. Locate on top of Zico drop-down ladder rack. | $853 |
| 3380-0036 | Fixed wall mounted peg tool board. Tool board to be spaced off wall a half inch. Location(s): [#LOC]. | $271 |
| 3380-0038 | Floor mounted roll-out tray with Jonathan Slides. Includes 400lbs. tray capacity. Mount on [#LOC] floor. | $1,556 |
| 3380-0039 | Adjustable mounted roll-out tray with Jonathan Slides. Includes 400 lbs tray capacity. Location(s): [#LOC] | $1,855 |
| 3380-0040 | Vertical hinged swing-out tool board. Location: [#LOC]. Hinge along forward compartment wall and position centered between door and back wall. Includes butterfly latch to secure in the closed position that is accessible from the ground. | $1,578 |
| 3380-0041 | PAC TRAC panels vertical stacked with tool mounting grooves orientated horizontal on back wall of compartment. Locate: [#LOC]. | $815 |
| 3380-0043 | Toolbox with slide out trays L1 offset forward. To include (4) individual trays mounted on slides. Reference photos and drawings in engineering file. Each tray to lock in and lock out. Include a 3/16" permanent shelf located directly above top of toolbox. Includes cover plate between tool box and forward compartment wall. | $2,890 |
| 3380-0044 | Toolbox with slide out trays L3 offset forward (forward of partion). To include (7) individual trays mounted on slides. Reference photos and drawings in engineering file. Each tray to lock in and lock out. Include a 3/16" permanent shelf located directly above top of toolbox. Includes cover plate between tool box and forward compartment wall. | $4,799 |
| 3380-0045 | Floor mounted Slide Master with tray. Model SM3-SP. 1/2 depth transverse or full depth on non transverse. Mount on [#LOC] floor. | $1,193 |
| 3380-0046 | Adjustable mounted Slide Master with tray. Model SM3-SP. 1/2 depth in transverse compartments or full depth in upper B1. Mounted in transverse area or extended area of [#LOC]. | $1,513 |
| 3380-0047 | Floor mounted Slide Master with tray. Model SM3-SP. 2/3rds deep. Mount on [#LOC] floor. | $1,337 |
| 3380-0049 | Running board suction tray (floating style). Includes tapered 3" front corner and removable slats in bottom of tray. Location(s): [#LOC]. | $694 |
| 3380-0050 | Floor mounted double stacked tray with 500# slides in B1. | $1,101 |
| 3380-0051 | PAC TRAC panels on permanent shelf/floor of compartment. Locate: [#LOC]. | $275 |
| 3380-0055 | Floor mounted roll-out/tilt down tray with aluminum frame. Mount on [#LOC] floor. | $1,114 |
| 3380-0056 | Adjustable mounted roll-out/tilt down tray with aluminum frame. Location(s): [#LOC]. For use in single depth or rescue style compartments. | $1,410 |
| 3380-0059 | Running board suction tray. Outboard (front) wall of tray and rubrail hinged at the bottom with quick release latches for drop down door. Includes tapered 3" front corner and removable slats in bottom of tray. Location(s): [#LOC] | $864 |
| 3380-0060 | Adjustable tool board with 500 lbs slides. Includes upper and lower adjustable track and gas shock actuated. Tool board sized to compartment height and depth as applicable. Location(s): [#LOC]. | $1,155 |
| 3380-0061 | Compartment underbody. Includes drop down front door with D-ring latches. Locate [#LOC]. | $1,561 |

| Item No. | Description | |
|---|---|---|
| 3380-0062 | Adjustable peg tool board. Includes upper and lower adjustable track and gas shock actuated. Tool board sized to compartment height and depth as applicable. Location(s): [#LOC]. | $1,009 |
| 3380-0063 | Ready Respond Storage cabinet. Includes (5) drawers with gray fronts. No side trim required. Locate floor mounted in [#LOC]. | $4,134 |
| 3380-0064 | Floor mounted roll-out tray. Includes 250lbs. tray capacity. Mount on B1 floor. Front and rear lips of tray to be 9.5". | $1,906 |
| 3380-0065 | Vertical hinged swing-out toolboard. Location: [#LOC]. Hinge along forward compartment wall and position centered between door and back wall. Includes D-Ring latch to secure in the closed position that is accessable from the ground. | $1,578 |
| 3380-0067 | Poly box(s) to be located [#LOC]. Box(s) depth (front to rear) to be sized for placement on floor/shelf or tray as applicable to compartment options. Box sized [#COL] | $335 |
| 3380-0068 | Floor mounted equally sized roll-out trays (PR). Includes 250lbs. tray capacity. Mount on [#LOC] floor. | $1,360 |
| 3380-0071 | Tool board on dual direction 1000 lb. SlideMaster. Includes lock-in/lock-out. Tool board sized to compartment height and depth as applicable. Location(s): [#LOC]. | $2,261 |
| 3380-0072 | Running board suction tray. Includes removable slats in bottom of tray. Tray to be as long as possible. Location(s): [#LOC]. | $1,068 |
| 3380-0073 | Slidemaster frame powder coated silver. Location(s): [#LOC] | $123 |
| 3380-0074 | Tool board HD adjustable. Includes upper and lower adjustable track and is gas shock actuated return style re-enforcing bends on vertical front and rear edges of tool board upper and lower adjustable track and gas shock actuated. Tool board sized to compartment height and depth as applicable. Location(s): [#LOC] | $898 |
| 3380-0075 | Running board suction tray (floating style). Includes tapered 3" front corner and removable slats in bottom of tray. Tray to be as long as possible. Location(s): [#LOC]. | $1,041 |
| 3380-0076 | Tray floor mounted roll-out with gas spring. 500 lbs. capacity. Location: [#LOC]. | $683 |
| 3380-0077 | Tray adjustable roll-out with 500 lbs. capacity and a gas shock. Location(s): [#LOC]. | $980 |
| 3380-0078 | Compartment underbody with slide-out tray. Includes drop-down front door with push-button latch(es). [#LOC]. | $1,932 |
| 3380-0079 | Adjustable heavy duty tool board with 500 lbs. capacity. Includes return style reinforcing bends on vertical front and rear edges of tool board upper and lower adjustable track and gas shock actuated. Tool board sized to compartment height and depth as applicable. Location(s): [#LOC]. | $898 |
| 3380-0080 | Adjustable heavy duty tool pegboard with 500 lbs. capacity. Includes return style reinforcing bends on vertical front and rear edges of tool board upper and lower adjustable track and gas shock actuated. Tool board sized to compartment height and depth as applicable. Location(s): [#LOC]. | $1,067 |
| 3380-0081 | Roll-out generator tray. Includes tray interlock. Locate [#LOC]. | $812 |
| 3380-0082 | Slidemaster frame powder coated black (EA). Location: [#LOC]. | $123 |
| 3380-0084 | Poly toolboards to be half inch thick. Toolboards to be spaced off wall a half inch. Location(s): L2 back wall and B1 upper side and back walls. | $858 |
| 3380-0085 | Slide Master Tray in transverse. A slide master tray to be mounted in the transverse module. Tray to extended 70% either side. Top tray to hold four (4) removable speedlay trays (lower tray on slide master to have higher lips on sides and lower on sides for easier removal of trays). Each tray to have the following capacity: (1) 200' of 1.75" (1) 200' of 1.75" (1) 200' of 2.5" and last tray to hold 100' of 1.75" 100' of 1.75" and 100' of 2.5". | $3,263 |
| 3380-0087 | Adjustable toolboard with 500 lb. slides for use with deep compartments. Includes upper and lower adjustable track with lock in/lock out latch. Toolboard sized to compartment height and depth as applicable. Location(s): [#LOC]. | $1,155 |
| 3380-0089 | Poly tray liners. Locate in the B1 floor mount B1 adjustable mounted and R3 floor mounted trays. Liner to have hand holes. | $522 |
| 3380-0090 | Aluminum tool box(es) to be 8" wide x 10" high x 25" deep. Location: L1 compartment floor. | $216 |
| 3380-0091 | Floor mounted preconnect roll-out tray. Includes 500lbs. tray capacity with (3) 5" tall sides and rear (front to be 2" with area for hand-hold cut-out on each end). To hold up to 150' of 1.75" DJ and placed on top of black dri-deck. Tray to have rotary latching IPO shock(s). Location : [#LOC]. | $1,005 |
| 3380-0093 | Floor mounted roll-out/tilt down tray. Mount on [#LOC] floor. For use on half transverse trays. | $1,143 |
| 3380-0094 | Floor mounted roll-out/tilt down tray. Mount on [#LOC] floor. For use on two thirds transverse trays or in the B1above the frame rails. | $1,143 |
| 3380-0095 | Adjustable mounted roll-out/tilt down tray. Location(s): [#LOC]. For use on 1/2 depth transverse trays or upper deep B1 compartment. | $1,445 |
| 3380-0096 | Adjustable mounted roll-out/tilt down tray. Location(s): [#LOC]. For use on 2/3 deep transverse trays or B1above the frame rails. | $1,445 |
| 3380-0097 | Adjustable partition in running board suction tray. Partition to be adjustable from front to back and use old style adjustable track. | $227 |
| 3380-0098 | Floor mounted Slide Master with tray. Model SMEX w/ 120% extension. 1/2 depth transverse or full depth on non transverse. Mount on [#LOC] floor. | $1,686 |

| Item No. | Description | |
|---|---|---|
| 3380-0099 | Vertical hinged swing-out toolboard. Location: [#LOC]. Hinge along rearward compartment wall and position centered between door and back wall. Includes D-Ring latch to secure in the closed position that is accessable from the ground and a positive hold open device in the open position. | $1,578 |
| 3380-0103 | Running board suction tray (floating style). Includes tapered 3" front corner and Turtle Tile brand [#COL] floor matting in bottom of tray. Location(s): [#LOC] | $694 |
| 3380-0125 | Running board suction tray. Outboard (front) wall of tray and rubrail hinged at the bottom with quick release latches for drop down door. Includes removable slats in bottom of tray. Location(s): [#LOC] | $864 |
| 3380-0129 | Left side running board SS hose tray with Duradek flooring. | $554 |
| 3380-0130 | Right side running board SS hose tray with Duradek flooring. | $554 |
| 3380-0133 | On Scene Solutions floor mounted roll-out/tilt down tray mount on [#LOC] floor. This tray shall not exceed 30" in depth. | $1,551 |
| 3380-0134 | On Scene Solutions adjustable mounted roll-out/tilt down tray mount in the [#LOC] compartment. This tray shall not exceed 30" in depth. | $1,842 |
| 3380-0140 | Generator roll-out tray. Includes tray interlock. For use with Harrison compartment mounted generator. Locate in compartment [#LOC]. | $550 |
| 3380-0142 | PAC TRAC panels vertical stacked on compartment walls with tool mounting grooves orientated horizontal (includes installation on vertical hinged compt door if applicable). Locate: [#LOC]. | $2,631 |
| 3380-0143 | Compartment underbody with slide-out tray. Includes front door with D-ring latch(es). Door will be attached to the tray. Locate [#LOC]. | $2,229 |
| 3380-0146 | Vertical hinged swing-out toolboard. Location: [#LOC]. Hinge along rearward compartment wall and position centered between door and back wall. Includes latch to secure in the closed position that is accessible from the ground. | $1,578 |
| 3380-0147 | Poly toolboards to be half inch thick. Toolboards to be spaced off wall a half inch. Location(s): B1 side and back walls. Includes cut-out for compartment light(s). Toolboards to be approx (2) 30" high x 24" wide and (1) 30" high x 43" wide. | $940 |
| 3380-0148 | Poly toolboards to be half inch thick. Toolboards to be spaced off wall a half inch. Location(s): L1 back wall notch around generator gauge panel. Toolboard to be approx 37" high x 32" wide. | $315 |
| 3380-0149 | Respond Ready toolbox located in the L1 compartment. Toolbox includes (4) drawers with 500 lb. lock-out slides and (4) dividers per drawer. Drawer heights to be (1) 3" (1) 4" (1) 8" and (1) 10" drawer. Includes standard top shelf gray powder coated front panels and galvanized components. Dimensions of overall toolbox 26" W x 27.5" H x 22.7" D. | $3,007 |
| 3380-0150 | Fixed back wall mounted toolboard with swirled finish. Toolboard to be spaced off wall a half inch. Location(s): [#LOC]. | $371 |
| 3380-0152 | Vertical hinged swing-out toolboard adjustable in and out. Location: L2. Hinge along rearward compartment wall and position centered between door and back wall. Includes latch to secure in the closed position that is accessible from the ground. | $1,578 |
| 3380-0155 | Running board suction tray. Includes Turtle Tile brand black floor matting in bottom of tray. Location(s): [#LOC]. | $535 |
| 3380-0158 | Floor mounted roll-out tray. Includes OnScene Solutions slide 81900 series. 500 lbs. tray capacity. Location: [#LOC]. | $2,013 |
| 3380-0159 | Adjustable tool board with 500 lbs slides. Includes upper and lower adjustable track .75" x .75" aluminum angle welded to front edge and gas shock actuated. Tool board sized to compartment height and depth as applicable. Location(s): [#LOC]. | $898 |
| 3380-0162 | Vertical hinged swing-out pegboard toolboard. Location: [#LOC]. Hinge along rearward compartment wall and position centered front to rear. Includes latch to secure in the closed position and gas shock to secure in the open position that is accessible from the ground. | $1,711 |
| 3380-0167 | Vertical hinged heavy duty swing-out toolboard. Location: [#LOC]. Hinge along forward compartment wall and position centered between door and back wall. Includes D-Ring latch to secure in the closed position that is accessible from the ground. Hinge made from 1/2" stainless steel rod and stainless steel plate with flanged bearing top and bottom. | $1,657 |
| 3380-0168 | Floor mounted roll-out tray with 500 lbs. capacity. Locate in R1 offset forward. Tray to be half the width of compartment. | $683 |
| 3380-0169 | Adjustable roll-out tray with 500 lbs. capacity. Tray to have 6" lips. Location(s): [#LOC]. | $1,262 |
| 3380-0173 | Vertical hinged heavy duty swing-out pegboard toolboard. Location: [#LOC]. Hinge along forward compartment wall and position centered between door and back wall. Includes D-Ring latch to secure in the closed position that is accessable from the ground. Hinge made from 1/2" stainless steel rod and stainless steel plate with flanged bearing top and bottom. | $1,752 |
| 3380-0175 | Floating style left side running board SS hose tray with Duradek flooring. | $662 |
| 3380-0176 | Floating style right side running board SS hose tray with Duradek flooring. | $662 |
| 3380-0177 | Prepare upper back walls of compartment L3 and L4 with studs for dealer to provide plywood (or whatever material) toolboard panels. Studs are to be threaded stainless steel. | $300 |

| Item No. | Description | |
|---|---|---|
| 3380-0178 | Vertical hinged swing-out toolboard. Location: R1 full height. Hinge along rearward compartment wall and position 5" in from door pan. Includes dual single point D-Ring latches to secure in the closed position that is accessible from the ground. | $1,578 |
| 3380-0179 | Vertical hinged heavy duty swing-out aluminum tool board(s) shall be provided for compartment(s) [#LOC]. The tool board shall be constructed of 1/4" (.25") smooth aluminum plate peg board style and be sized in height and length as applicable. The tool board shall be position centered between door and back wall and hinged along rearward wall mounted. The hinge shall be made from 1/2" stainless steel rod and stainless steel plate with flanged bearing top and bottom that will permit the board to swing out of the compartment for easier access to tools and/or equipment. The tool board shall latch to a 3" x 3" extrusion with a Tri-Mark latch to secure the toolboard in the closed position. | $2,139 |
| 3380-0180 | (2) Hand hold slotted cut-outs shall be provided on rollout tray's front wall (one each side) for easier roll-out/roll-in. Rubber trim shall line the hand cut outs. Approximate size of cut-out to be 1-1/2" x 5". Locate on each tray in [#LOC]. | $40 |
| 3380-0181 | Vertical hinged swing-out toolboard. Located in [#LOC] 12" from door. Hinge along rearward compartment wall and position centered between door and back wall. Includes D-Ring latch to secure in the closed position that is accessable from the ground and a positive hold open device in the open position. | $1,578 |
| 3380-0182 | Floor mounted slidemaster roll-out tray to hold (3) SCBA donning stations. Donning stations will be Zico spring clip brackets. Location [#LOC]. | $1,802 |
| 3380-0187 | Dual toolboards vertical hinged heavy duty swing-out toolboards. Location: [#LOC]. The inboard toolboard shall be hinged along rearward compartment wall and positioned 8" off inboard/back wall of the compartment. The outboard toolboard shall be hinged along forward compartment wall and positioned 8" outboard of other (inboard) tool board. Includes (1) D-Ring latch per toolboard to secure in the closed position that is accessible from the ground. Hinge made from 1/2" stainless steel rod and stainless steel plate with flanged bearing top and bottom. | $3,641 |
| 3380-0189 | Running board suction tray with a diamond plate door hinged on the inboard side with quick release flush latch(s) and a lanyard type holding device. Includes removable slats in bottom of tray. Location(s): [#LOC]. | $1,134 |
| 3380-0190 | Vertical hinged swing-out tool board. Location: [#LOC]. Hinge along forward compartment wall and position halfway in from door opening. Includes single point D-ring latch to secure in the closed position that is accessible from the ground. | $1,578 |
| 3380-0191 | Vertical hinged heavy duty swing-out toolboard. Location: [#LOC]. Hinge along rearward compartment wall and position centered between door and back wall. Includes D-Ring latch to secure in the closed position that is accessible from the ground. Hinge made from 1/2" stainless steel rod and stainless steel plate with flanged bearing top and bottom. | $1,657 |
| 3380-0193 | Poly toolboards to be half inch thick. Toolboards to be spaced off interior/backwall a half inch. Location(s):[#LOC]. | $858 |
| 3380-0194 | PAC TRAC panels vertical stacked with tool mounting grooves orientated horizontal on each side of Swing-out Toolboard. Locate:[#LOC]. | $1,629 |
| 3380-0195 | Poly boxes (4) to be located [#LOC]. Box depth (front to rear) to be sized for placement on floor/shelf or tray as applicable to compartment options. All (4) boxes shall be 10" in height and equal width to fill the placement area designated. | $1,334 |
| 3380-0196 | Vertical hinged heavy duty swing-out pegboard toolboard. Location: [#LOC]. Hinge along rearward compartment wall and includes D-Ring latch to secure in the closed position that is accessible from the ground. Hinge made from 1/2" stainless steel rod and stainless steel plate with flanged bearing top and bottom. | $1,736 |
| 3380-0197 | Floor mounted roll-out/tilt down tray with aluminum frame. Mount on [#LOC] floor. Tray(s) to have 2" high sides all around IPO standard. | $1,114 |
| 3380-0198 | Adjustable mounted roll-out/tilt down tray with aluminum frame. Location(s): [#LOC]. Tray(s) to have 2" high sides all around IPO standard. For use in single depth or rescue style compartments. | $1,410 |
| 3380-0199 | Floor mounted bi-directional Slide Master with tray. Model SM2-D-SP. Includes fixed toolboard centered in tray lengthwise extending up as high as possible. Toolboard to be fabricated from 1.5" square aluminum tubing for frame and centered inside of frame shall be .250" smooth plate with bracing on each end for rigidity when tools are mounted. Tray/toolboard mounted on L1/R1 transverse floor. | $2,442 |
| 3380-0200 | Running board suction tray (floating style). Includes tapered 3" front corner and removable slats in bottom of tray. Location(s): [#LOC]. Trays to be smooth plate painted black durabak. | $879 |
| 3380-0201 | PAC TRAC panels vertical stacked with tool mounting grooves orientated horizontal on each side of swing-out tool board. Locate: [#LOC]. | $1,629 |
| 3380-0203 | Adjustable peg tool board. Includes upper and lower adjustable track and gas shock actuated. Tool board sized to compartment height and depth as applicable. Location(s): [#LOC]. | $974 |
| 3380-0204 | Floor mounted Slide Master with tray. Model SM3-LP (low profile). Single depth. Mount on [#LOC] floor. | $977 |

| Item No. | Description | |
|---|---|---|
| 3380-0206 | Adjustable peg tool board. Includes upper and lower adjustable track with lock in/lock out latch. Slides for use with deep compartments. Toolboard sized to compartment height and depth as applicable. Location(s): [#LOC]. | $1,228 |
| 3380-0208 | Floor mounted rollout tray/toolboard with gas spring and 500 lbs. capacity. The vertical toolboard will be mounted on adjustable mount(s) on the floor of the roll out tray. Includes return style reinforcing bends on vertical front and rear edges of tool board. Tool board sized to compartment height and depth as applicable. Location: [#LOC]. | $1,355 |
| 3380-0209 | Vertical hinged swing-out tool board. Location: L1 Hinge along rearward compartment wall and position halfway in from door opening. Includes single point D-ring latch to secure in the closed position that is accessible from the ground. | $1,109 |
| 3380-0211 | Officer side running board suction tray shall have 1/2" drain holes IPOS. | $28 |
| 3380-0212 | Floor mounted rollout tray/toolboard with gas spring and 500 lbs. capacity. The vertical peg board tool board will be mounted on adjustable mount(s) on the floor of the roll out tray. Includes return style reinforcing bends on vertical front and rear edges of tool board. Tool board sized to compartment height and depth as applicable. Location: [#LOC]. | $1,460 |
| 3380-0220 | Floor mounted roll-out/tilt down and adjustable mounted roll-out/tilt down trays with aluminum frame. Trays to have 2" high sides all around IPO standard. Mount in [#LOC] compartment. | $2,523 |
| 3380-0222 | Floor mounted roll-out inverted tray with 500 lbs. capacity. Location: [#LOC]. | $683 |
| 3380-0223 | Tool board HD adjustable. Includes return style re-enforcing bends on vertical front and rear edges of tool board upper and lower adjustable track 250LB slides and manual lock in/out latches at top. Tool board sized to compartment height and depth as applicable. Location(s): L3 | $818 |
| 3380-0224 | Floor mounted roll-out tray with gas spring. 500 lbs. capacity. Tray shall be made of 1/4" smooth aluminum. Location: [#LOC]. | $904 |
| 3380-0225 | Floor mounted Slide Master with tray. Model SMEX w/ 120% extension. 2/3rds deep. Includes fixed toolboard centered in tray lengthwise extending up as high as possible. Toolboard to be fabricated from 1.5" square aluminum tubing for frame and centered inside of frame shall be .250" smooth plate with bracing on each end for rigidity when tools are mounted. Tray/toolboard mounted on [#LOC] floor. | $2,442 |
| 3380-0226 | Poly toolboards to be half inch thick. Toolboards to be spaced off wall a half inch. Location(s): B1 side and back walls. Includes cut-out for compartment light(s). Toolboards to be approx (2) 30" high x 24" wide and (1) 30" high x 36" wide. | $940 |
| 3380-0228 | Vertical hinged swing-out Pegboard tool board. Location: L2. Hinge along rearward compartment wall and position halfway in from door opening. Includes single point D-ring latch to secure in the closed position that is accessible from the ground. | $1,710 |
| 3380-0229 | Adjustable toolboard partition. With unistrut track mounted to inside of rollout tray on floor for toolboard to adjust side to side. Toolboard to be fabricated from 1.5" square aluminum tubing for frame and centered inside of frame shall be .250" smooth plate with bracing on each end for rigidity when tools are mounted. Locate in [#LOC] floor mounted roll-out tray. | $530 |
| 3380-0230 | Compartment underbody. Includes drop down front door with push-button latches. Locate: Span below R1 and R2. | $1,461 |
| 3380-0233 | Adjustable roll-out tray with 500 lbs. capacity. Tray to have raised forward lip with hole(s) to accommodate mounting of captive rollers for optioned reels in compartment. Tray at full extension shall position rollers outward to provide additional protection from hoses chafing or damaging painted surfaces: [#LOC]. | $1,332 |
| 3380-0236 | Vertical hinged heavy duty swing-out toolboard with storage trough(s). Location: [#LOC]. Hinge along forward compartment wall and position centered between door and back wall. Includes D-Ring latch to secure in the closed position that is accessible from the ground. The Toolboard shall include a 5" x 5" Trough enclosed on each end and running full length along the botom edge of the board both inside and outside (for as long as available space allows when fully opened) used for small containers storage. Hinge made from 1/2" stainless steel rod and stainless steel plate with flanged bearing top and bottom. | $1,811 |
| 3380-0237 | Compartment underbody 30" wide. Includes drop down front door with push-button latches. The storage compartment shall hold approximately 50` of 3" DJ hose. Locate [#LOC}. | $1,256 |
| 3380-0238 | Pac Trac Vertical hinged swing-out toolboard PM-1000 adjustable in and out. Location: [#LOC]. Hinge along forward compartment wall. Includes latch to secure in the closed position that is accessible from the ground. | $1,630 |
| 3380-0239 | Adjustable roll-out tray with 500 lbs. capacity and a gas shock. PAC tool panel mounted on floor of tray. Location(s): L1 | $1,311 |
| 3380-0240 | Floor mounted stainless steel roll-out tray. Includes OnScene Solutions slide 81900 series. 500 lbs. tray capacity. Location: [#LOC]. | $2,041 |
| 3380-0243 | Adjustable roll-out tray. Includes 500lbs. tray capacity. Location: L3 compartment. The tray to be maximum of 20" deep x standard compartment width size. Use 20" long slides due to the enhanced extended compartmentation. | $980 |

| Item No. | Description | |
|---|---|---|
| 3380-0246 | Running board suction tray. Includes removable slats in bottom of tray. Tray inside dimensions to be 35" long from front to back x 10" from rub rail inward to pump panel x 9.5" total depth inside. Tray shall be equipped with a removable slat which will reduce the listed depth dimension. The outboard edge of the tray shall have no folded lip and shall bolt through rub rail to allow for max width. Location(s): [#LOC] | $584 |
| 3380-0247 | Floor mounted roll-out tray 48" wide sized for portable pump. Includes 500lbs tray capacity. Location: R1 offset forward. | $890 |
| 3380-0248 | Vertical hinged swing-out tool board adjustable in and out. Location: [#LOC]. Hinge along forward compartment wall. Includes single point D-ring latch to secure in the closed position that is accessible from the ground. | $1,631 |
| 3380-0249 | Compartment underbody. Includes drop down front door with push-button latches. To hold approximately 25' of 5" LDH hose in each underbody compartment. Locate below L1/R1. | $1,256 |
| 3380-0250 | Floor mounted Slide Master with tray. Notched. Model SM3-SP. 2/3rds deep. Notch rear forward corner to accommodate vertical exhaust to maximize utility. Finish to be sanded aluminum unless otherwise specified. Locate: L1 extended floor. | $1,518 |
| 3380-0251 | Left side running board SS hose tray with Duradek flooring. Well to store 50' of 4" hose. | $554 |
| 3380-0252 | Right side running board SS hose tray with Duradek flooring. Well to store 50' of 4" hose. | $554 |
| 3380-0253 | Adjustable aluminum peg toolboard with SlideMaster SM3-MP 600 lb. slides for use with deep compartments. Includes upper and lower adjustable track with lock in/lock out latch. Toolboard sized to compartment height and depth as applicable. Location(s): R1 | $1,311 |
| 3380-0254 | Floating style right side running board SS hose tray with Duradek flooring. Well to be 34"L x 9"W x 11"D and offset rearward. | $684 |
| 3380-0255 | Floating style left side running board SS hose tray with Duradek flooring. Well to be 34"L x 9"W x 11"D and offset rearward. | $684 |
| 3380-0256 | Compartment with provision for 2 SCBA Bottle storage. Includes drop-down door with D-ring latch. Compartment to be located [#LOC]. | $643 |
| 3380-0261 | Roll-out generator tray. Includes tray interlock. Locate R3. 23 x 18 x 3 spaced from forward wall 8 inches. | $812 |
| 3380-0262 | Vertical hinged heavy duty swing-out toolboard. Location: L2. Hinge along forward compartment wall and position so that face of toolboard will be 6" into compartment from back of closed door. Includes D-Ring latch to secure in the closed position that is accessible from the ground. Hinge made from 1/2 | $1,657 |
| 3380-0264 | PAC TRAC panels vertical stacked with tool mounting grooves orientated horizontal on forward and rearward side walls of compartment L2. | $548 |
| 3380-0265 | Tray floor mounted roll-out with gas spring. 500 lbs. capacity. The front and rear lips shall be 1.5" high. Location: [#LOC]. | $683 |
| 3380-0266 | Vertical hinged swing-out Pegboard tool board. Location: R2. Hinge along forward compartment wall and position halfway in from door opening. Includes single point D-ring latch to secure in the closed position that is accessible from the ground. | $1,710 |
| 3380-0267 | Compartment underbody 66" wide with slide-out tray. Includes front door with D-ring latch(es). Door will be attached to the tray. Locate centerd below L1/L2. | $2,229 |
| 3380-0268 | Tray / toolboard combination floor mounted roll-out with gas spring. 500 lbs. capacity. The tray portion to be rearward. L1 rearward of CAFS unit. | $1,548 |
| 3380-0273 | Fixed back wall mounted toolboard. Toolboard to be spaced off wall a half inch. Location(s): L1 lower on forward rearward and back walls. Note toolboard fixed to back wall will be removable due to jack access. | $226 |
| 3380-0274 | Vertical hinged heavy duty swing-out toolboard. Location: [#LOC]. Hinge along forward compartment wall and position centered between door and back wall. Includes D-Ring latch to secure in the closed position that is accessible from the ground and a ball type nylon catch with a ball socket rod to hold device in the open position. Hinge made from 1/2" stainless steel rod and stainless steel plate with flanged bearing top and bottom. | $1,694 |
| 3380-0275 | Vertical hinged heavy duty swing-out toolboard. Location: [#LOC]. Hinge along forward compartment wall and position 8 in. in from door opening between door and back wall. Includes D-Ring latch to secure in the closed position that is accessible from the ground and a ball type nylon catch with a ball socket rod to hold device in the open position. Hinge made from 1/2" stainless steel rod and stainless steel plate with flanged bearing top and bottom. | $1,694 |
| 3380-0277 | Running board suction tray extra capacity drivers side. Includes removable slats in bottom of tray. Tray to be as long as possible and 5" deeper than standard tray depth for extra hose capacity. Location shall be on drivers side pump panel running board. (Note): ground clearance below tray will be reduced to approximately 9" over level ground. | $1,265 |
| 3380-0278 | Running board suction tray. Includes removable slats in bottom of tray. Tray to be as long and as deep as possible to hold 50' of 5.00" LDH hose with Storz couplings. Location(s): officer side runningboard. | $765 |
| 3380-0279 | Floor mounted SlideMaster tray with aluminum frame. Model M3. Single depth. Mount on [#LOC] floor. | $1,216 |

| Item No. | Description | |
|---|---|---|
| 3380-0281 | Stainless steel underbody compartment with 500 lb. capacity Jonathan brand ball bearing slide drawer on the driver's and officer's side of the body forward of the rear wheels. The door face shall be constructed of brushed stainless steel and a locking bent D-ring style dead bolt latching mechanism shall be installed. Interior tray height to be 6" high while the width and depth shall fit the available area. | $5,658 |
| 3380-0282 | All floor mounted and adjustable tray(s) to have 4" high sides all around IPO standard. | $411 |
| 3380-0286 | Divider / Tool Board. Weld a heavy duty gusseted vertical divider as tall as height allows and centered inside tray. Material to be 1/4 inch thick aluminum and full depth of tray. Locate: [#LOC]. | $677 |
| 3380-0288 | Adjustable mounted Slide Master with tray. Model SM3-SP. 30 inch depth. Tray shall be 30 inches deep front to rear. Locate: B1 upper area over frame rail and as close to compartment back wall as possible. Tray when at 100% extension shall partially extend outside of compartment approx 8 inches. | $1,513 |
| 3380-0289 | Fixed back wall mounted peg toolboard. Toolboard to be spaced off wall an inch. Location(s): [#LOC]. | $271 |
| 3380-0292 | Tray floor mounted roll-out with gas spring. 500 lbs. capacity. For use with half transverse tray. Tray travel will be limited to 26 inches of extension. Location: [#LOC]. | $683 |
| 3380-0293 | Floor mounted bi-directional Slide Master with tray. Aluminum Model M2D. Mounted on [#LOC]. | $1,884 |
| 3380-0294 | Crosby Style compartment underbody with slide-out tray. Includes front door with D-ring latch(es). Door will be attached to the tray. Locate [#LOC]. | $2,229 |
| 3380-0296 | Tray floor mounted roll-out with mechanical rotary latch system. 500 lbs. capacity. Location: [#LOC]. | $683 |
| 3380-0302 | Adjustable heavy duty tool board with 500 lb capacity. Includes return style reinforcing bends on vertical front and rear edges of tool board upper and lower adjustable track and gas shock actuated. Tool board sized to compartment height and depth as applicable. Upper end to be notched around compartment offset to provide maximum height. Relocate upper slide as applicable for maximum extension of toolboard. Location(s): [#LOC]. | $962 |
| 3380-0304 | Tray floor mounted roll-out with gas spring. 500 lbs. capacity. Location: L1 Tray to include a center vertical mounted peg board divider to extend 26in. above the top of the tray lip into open area above in compartment. Peg board will be centered in tray and positioned to utilize peg board storage on the forward and rearward sides of the board as mounted. Peg board to be utilized for fitting and tool storage. | $880 |
| 3380-0306 | Fixed wall mounted peg toolboard. Toolboard to be spaced off wall a half inch on forward rearward and back wall from floor to ceiling (as practical). Location(s): [#LOC]. | $1,080 |
| 3380-0307 | SlideMaster generator roll-out tray with interlock. Model SM3-SP. Single depth. Mount on [#LOC] floor. | $1,065 |
| 3380-0308 | Tray divider vertical divider minimum 16" tall x tray depth x 1/4 inch thick alum pegboard. The divider will be adjustable as located within the tray in L2. | $451 |
| 3380-0309 | Floating style right side running board SS hose tray with Duradek flooring. Well to be 46"L x 8.5"W x 11"D to retain (2) 50' doughnut rolls of 4" LDH hose. | $684 |
| 3380-0312 | Fixed wall mounted peg toolboard. Toolboard to be spaced off wall a half inch on forward rearward and back wall from floor to ceiling as practical. Location(s): [#LOC]. | $810 |
| 3380-0314 | Vertical hinged heavy duty swing-out toolboard. Location: R2. Hinge along forward compartment wall and position centered between door and back wall. Includes Tri-Mark latch to secure in the closed position that is accessible from the ground. Hinge made from 1/2" stainless steel rod and stainless steel plate with flanged bearing top and bottom. | $1,738 |
| 3380-0315 | Floating style right side running board SS hose tray with Duradek flooring. Well to be 50"L x 8.5"W x 8"D and includes (2) divided areas offset rearward for 2.5 gal water can extinguisher storage. | $757 |
| 3380-0316 | Vertical hinged severe duty swing-out tool board. Location:[#LOC] Hinge along rearward compartment wall and position centered between door and back wall. Includes positive lock to secure in both closed and open position that is accessible from the ground. Heavy duty pivots for 400lb weight capacity on tool board. Tool board is to be Peg board style with 1in. on center pattern for the peg board holes. | $3,815 |
| 3380-0317 | Tray adjustable roll-out with 500 lbs. capacity and a gas shock. There shall be 3" clearance between the back of the tray and all mounting hardware to the back wall of compartment. Location(s): L3. | $980 |
| 3380-0318 | Floor mounted Slide Master with flat plate. Model SM3-MP (Mid profile) with 300 Lb capacity. For use with deep compartments. Located upper pump module compartment. | $1,189 |
| 3380-0320 | PAC TRAC panels vertical stacked with tool mounting grooves orientated horizontal on each side of (1) roll-out tool board. Tool board not included & requires a tool board selection. Locate in compt [#LOC]. | $1,629 |
| 3380-0322 | Floor mounted roll-out tray. Includes 500lbs. tray capacity. No lip on tray. Location: L3. | $890 |
| 3380-0326 | Fixed back wall mounted plywood (Grade A Birch) tool boards. Includes (3) coats of varnish. Toolboards to be spaced off wall a half inch. Location: (1) L3 upper (1) R1 upper (1) R2 & (1) R3 upper. | $1,119 |

| Item No. | Description | |
|---|---|---|
| 3380-0327 | Adjustable mounted Hansen roll-out/tilt-down tray. Location(s): R2. For use in single depth or rescue style compartments. | $1,445 |
| 3380-0328 | Adjustable heavy duty two sided peg board roll-out aluminum tool board with hidden gas shock . Includes return style re-enforcing bends on vertical front and rear edges of tool board with boxed in design upper and lower adjustable track and gas shock actuated. Tool board sized to compartment height and depth as applicable. Location(s): [#LOC] | $1,067 |
| 3380-0329 | Adjustable heavy duty two sided tool board with 500 lbs. capacity. Includes return style reinforcing bends on vertical front and rear edges of tool board and boxed in design upper and lower adjustable track and gas shock actuated. Tool board sized to compartment height and depth as applicable. Location(s): [#LOC]. | $898 |
| 3380-0330 | Fixed back wall mounted plywood (Grade A Birch) toolboard. Includes (3) coats of varnish. Toolboard to be spaced off wall a half inch. Location: (1) L2 | $488 |
| 3380-0331 | Floor mounted Slide Master with tray. Model SM3-SP. 1/2 depth transverse or full depth on non transverse. Tray side walls to be 6 inches tall. Design includes (4) four 2 inch diameter holes equally spaced each side wall of tray for hold down strap attachment. Mount on [#LOC] floor. | $1,433 |
| 3380-0333 | Running board suction tray (floating style). Includes tapered 3" front corner and removable slats in bottom of tray. Tray to be as long as possible. Also tray to be wider than standard to accommodate three lays of 1.75" DJ hose. Requires 2" wider running board. Location(s): [#LOC]. | $952 |
| 3380-0334 | Vertical hinged heavy duty swing-out toolboard. Location: [#LOC]. Hinge along forward compartment wall and position close at door opening just inside envelope to clear door. Customer to utilize the back wall of the compartment and the back wall of the swing out tool board only. Includes D-Ring latch to secure in the closed position that is accessible from the ground. Hinge made from 1/2in. stainless steel rod and stainless steel plate with flanged bearing top and bottom. | $1,657 |
| 3380-0335 | PAC TRAC panels vertical stacked with tool mounting grooves orientated horizontal on back side of Swing-out Tool board. Locate:[#LOC]. | $814 |
| 3380-0336 | Vertical hinged swing-out peg tool board as large as practical for size of compartment. Location: R4. Hinge along rearward compartment wall. Adjustable depth with upper and lower stainless Unistrut channels. Includes single point D-ring latch to secure in the closed position that is accessible from the ground. | $2,286 |
| 3380-0337 | Tool Board PAC brand double sideded adjustable slide out tool board on slide p/n VSO-24. Locate (1) in compt. [#LOC]. | $1,805 |
| 3380-0338 | Adjustable mounted Hansen roll-out/tilt-down tray. Location(s): R1. For use in single depth or rescue style compartments. | $1,445 |
| 3380-0339 | Running board suction tray with extra capacity (see drawing for details). Includes removable slats in bottom of tray. Location(s): [#LOC] | $641 |
| 3380-0340 | PAC TRAC panels vertical stacked with tool mounting grooves orientated horizontal on rearward wall of compartment. Locate: [#LOC]. | $815 |
| 3380-0345 | Running board suction tray. Includes removable slats in bottom of tray. Tray to be as long as possible. Also tray to be wider than standard to accommodate three lays of 1.75" DJ hose. Requires 2" wider running board. Location(s): [#LOC]. | $1,221 |
| 3380-0347 | Vertical hinged swing-out tool board adjustable in and out. Location: [#LOC]. Hinge along rearward compartment wall. Includes single point D-ring latch to secure in the closed position that is accessible from the ground. | $1,631 |
| 3380-0348 | Vertical hinged heavy duty swing-out toolboard. Location: L2. Hinge along forward compartment wall and position 14" off back wall. Includes D-Ring latch to secure in the closed position that is accessible from the ground. Hinge made from 1/2" stainless steel rod and stainless steel plate with flanged bearing top and bottom. | $1,657 |
| 3380-0350 | PAC TRAC panels vertical stacked with tool mounting grooves orientated horizontal on forward rearward and back walls of compartment L5 upper and lower. | $1,000 |
| 3380-0358 | PAC TRAC panels vertical stacked with tool mounting grooves orientated horizontal on forward and rearward side walls of compartment R2. | $548 |
| 3380-0359 | PAC TRAC panels vertical stacked with tool mounting grooves orientated horizontal on forward and rearward side walls of compartment L1. | $548 |
| 3380-0360 | Tray modification to the slide-out tray in R3 compartment. The side of tray that is at R3 opening to hinge down and lock with a pin on each end in the upright position. | $204 |
| 3380-0361 | Adjustable heavy duty tool pegboard with 500 lbs. capacity. Includes return style reinforcing bends on vertical front and rear edges of tool board upper and lower adjustable track and gas shock actuated. Tool board sized to compartment height and depth as applicable. Upper end to be notched around compartment offset to provide maximum height. Relocate upper slide as applicable for maximum extension of toolboard. Location(s): [#LOC]. | $1,131 |
| 3380-0362 | Adjustable mounted Hansen roll-out/tilt-down tray. Location(s): [#LOC] For use in single depth or rescue style compartments. | $1,445 |
| 3380-0363 | Left side running board SS hose tray with Duradek flooring. Well to store minimum 25' of 5" hose. | $554 |
| 3380-0364 | Adjustable roll-out tray with 500 lbs. capacity. Tray to have 4" lips. Location(s): [#LOC]. | $1,262 |

| Item No. | Description | |
|---|---|---|
| 3380-0366 | Vertical hinged swing-out Pegboard tool board adjustable in and out. Location: R3. Hinge along rearward compartment wall. Includes single point D-ring latch to secure in the closed position that is accessible from the ground. | $1,710 |
| 3380-0377 | Adjustable heavy duty two sided tool board rated at 500 lbs. capacity with dual side pockets. Includes return style reinforcing bends on vertical front and rear edges of tool board and boxed in design upper and lower adjustable track and gas shock actuated. Shall be equipped with (2) pockets (1) one mounted to bottom on forward facing surface approx. 10" x 10" by as long as tool board will allow and (1) one mounted to bottom rearward facing surface approx. 5" x 10" by as long as tool board will allow. Tool board sized to compartment height and depth as applicable. Location: L5 compartment. | $1,279 |
| 3380-0379 | Floor mounted Bi-Directional Slide Master with tray. Model SM2-D-SP. Mounted inside cab medical cabinet. The tray shall be made as wide as possible. Options like rear wall cab heaters etc will reduce the width of the tray. | $1,884 |
| 3380-0380 | Vertical hinged swing-out toolboard adjustable in and out. Location: L2. Hinge along forward compartment wall. Includes latch to secure in the closed position that is accessible from the ground. Hinge made from 1/2" stainless steel rod and stainless steel plate with flanged bearing top and bottom. | $1,578 |
| 3380-0381 | Tool board(s) to have a hand hold cutout on each outboard edge. | $259 |
| 3380-0383 | Tray floor mounted roll-out with gas spring and "Hansen" slides. 500 lbs. capacity. Location: [#LOC]. | $1,103 |
| 3380-0384 | Tray with 6" sides floor mounted roll-out with gas spring and "Hansen" slides. 500 lbs. capacity. Location: [#LOC]. | $1,218 |
| 3380-0385 | Adjustable mounted roll-out tray with gas spring and "Hansen" slides. 500 lbs tray capacity. Location(s): [#LOC] | $1,611 |
| 3380-0386 | Pac Trac Dual Vertical hinged swing-out toolboards PM-1000 adjustable in and out. Location: [#LOC]. Hinge (1) forward and (1) rearward compartment walls. Includes latch to secure in the closed position that is accessible from the ground. | $3,260 |
| **PUMP AND PLUMBING** | | $0 |
| 4000-0036 | Stainless Steel Victaulic couplings for all discharge and intake plumbing. | $4,230 |
| 4005-0007 | Hale Centrifugal Booster PTO Pump - 2 Stage | $17,069 |
| 4005-0013 | Hale QFLO 750-1250 GPM pump single stage. | $23,739 |
| 4005-0014 | Hale QMID 1250 GPM single stage Pump | $31,994 |
| 4005-0015 | Hale QMAX 1000-1250 GPM single stage Pump | $28,551 |
| 4005-0016 | Hale QMAX 1000-2250 GPM single stage pump. | $28,551 |
| 4005-0017 | Hale QTWO 1000-1250 GPM two stage Pump | $36,062 |
| 4005-0018 | Hale QTWO 1500-2000 GPM two stage pump. | $37,025 |
| 4005-0019 | Waterous CS 750-1250 single stage pump. | $24,924 |
| 4005-0020 | Waterous CM 750-1250 two stage Pump | $28,626 |
| 4005-0021 | Waterous CSU 1500-2250 GPM single stage pump. | $28,271 |
| 4005-0022 | Waterous CMU 1500-2250 GPM two stage pump. | $42,907 |
| 4005-0023 | Waterous S100 2000 GPM Pump for RLP | $38,292 |
| 4005-0024 | Hale RSD (1500 GPM) single stage RGA gear box driven pump. For use with rear mount pump body. | $30,649 |
| 4005-0036 | Extended Hale Pump 1 Year Warranty in addition to the standard 2 year warranty. | $745 |
| 4005-0037 | Extended Hale Pump 2 Year Warranty in addition to the standard 2 year warranty. | $1,431 |
| 4005-0038 | Extended Hale Pump 3 Year Warranty in addition to the standard 2 year warranty. | $2,118 |
| 4005-0039 | Extended Waterous Pump 3 Year Warranty in addition to the standard 2 year warranty. | $1,800 |
| 4005-0040 | Pump Portable 500 GPM Hale w/4" Tank-to-pump. Location [#LOC] | $22,865 |
| 4005-0041 | Test pump with 6" steamers and switch to 4.5" steamers afters test. | $180 |
| 4005-0044 | Rating 3000 GPM Industrial | $2,801 |
| 4005-0052 | Hale QMAX 1500-2250 GPM single stage pump with K Gear Box | $29,653 |
| 4005-0057 | Hale DSD Pump 750/1500 GPM single stage | $32,260 |
| 4005-0060 | Hale HPX300 BD26 Hale Portable Pump mounted in pan. W/Remote controls in Cab. Hook up to Chassis Fuel System. | $20,842 |
| 4005-0061 | Hale AP 500 MGA T-Case Driven single stage Pump. | $21,658 |
| 4005-0062 | Waterous S100D (1500 GPM) single stage pump. For use with rear mount pump body. | $40,003 |
| 4005-0063 | Hale QFLO Plus 750-1250 GPM Pump single stage | $43,910 |
| 4005-0081 | Hale RSD single stage PTO driven pump. For use with rear mount pump body and mid-ship engine applications. | $21,279 |
| 4005-0085 | Hale QMAX-21L 1750 pump. Tradition. | $25,408 |
| 4005-0086 | Hale RSD/RGA single stage pump. For use with rear mount pump body. | $30,681 |
| 4005-0087 | Waterous S100D/TC20 single stage pump. For use with rear mount pump body. | $29,241 |
| 4005-0098 | Waterous Pump TPP-5 Extended Warranty. | $1,800 |
| 4005-0099 | Hale Pump Pro-Tech Extended 3 Year Warranty in addition to the standard 2 year warranty. | $2,036 |
| 4005-0100 | Hale AP50 PTO driven pump. Includes driver side 5" intake with cap (shipped loose). Capacity of 500GPM/1892LPM | $13,244 |

| Item No. | Description | |
|---|---|---|
| 4005-0101 | | $17,776 |
| | Hale MBP PTO driven pump. Includes driver side 6" intake with cap (shipped loose). Capacity of 750GPM/2839LPM. | |
| 4005-0102 | | $17,776 |
| | Hale MBP PTO driven pump. Includes driver side 6" intake with cap (shipped loose). Capacity of 1000GPM/3785LPM. | |
| 4005-0122 | Waterous CSU 1500-2250 GPM single stage Pump. Shall include the Endurance CSC20 Waterous C20 transmission. | $39,568 |
| 4005-0131 | E-ONE 1250-1500 GPM pump single stage. | $36,168 |
| 4005-0132 | Hale AP 500 RGA T-Case Driven single stage Pump. | $21,658 |
| 4005-0138 | Hale QMAX 1000-2250 GPM single stage pump. | $37,355 |
| 4005-0143 | Hale DSD Pump 750/1500 GPM single stage | $23,265 |
| 4005-0147 | E-ONE 1250-1500GPM PTO pump single stage. | $36,173 |
| 4005-0150 | Hale MG Pump 500/1000 GPM single stage | $22,493 |
| 4005-0152 | Hale MG Pump 500/1000 GPM single stage | $19,032 |
| 4005-0154 | Hale QMAX-XS 1250-2250 GPM single stage pump. | $29,540 |
| 4005-0155 | Hale RME/RGA 3000gpm Pump for Rear Mount with (3) 6" Inlets. | $40,516 |
| 4005-0169 | Hale QMAX-XS R 1250-2250 GPM single stage pump. (R GEAR BOX) | $30,181 |
| 4005-0171 | Waterous CXVK 750-1250 single stage PTO Pump. | $24,825 |
| 4005-0172 | Waterous CS 750-1250 single stage pump. (With gear box to front IPOS) | $28,457 |
| 4005-0180 | E-ONE 1250-1500 GPM pump single stage for use with Hush chassis. | $35,293 |
| 4005-0182 | Waterous CXVK 1250 GPM single stage pump with 150CFM CAFS | $66,602 |
| 4005-0184 | Waterous CXS-C20C 1250-1500 GPM single stage pump for eMax configurations. | $37,451 |
| 4005-0185 | Hale CBP 250 GPM PTO pump. | $10,508 |
| 4005-0187 | Hale APMG50 Pump 500GPM single stage. | $16,539 |
| 4005-0190 | Darley 1.5 AGH single stage hydraulically driven centrifugal pump. | $12,412 |
| 4005-0195 | Hale QFLO 750-1250 GPM pump single stage. Requires primer option. | $20,722 |
| 4005-0196 | Hale QMAX 1000-2250 GPM single stage pump. Requires primer option. | $25,534 |
| 4005-0197 | Hale QTWO 1500-2000 GPM two stage pump. Requires primer option. | $34,008 |
| 4005-0200 | Waterous CS 750-1250 single stage pump. Requires primer option. | $21,857 |
| 4005-0201 | Waterous CSU 1500-2250 GPM single stage pump. Requires primer option. | $25,205 |
| 4005-0202 | Waterous CMU 1500-2250 GPM two stage pump. Requires primer option. | $39,841 |
| 4005-0204 | E-ONE 1250-1500 GPM pump single stage. Requires primer option. | $33,252 |
| 4005-0205 | E-ONE 1250-1500GPM PTO pump single stage. Requires primer option. | $33,257 |
| 4005-0206 | E-ONE 1250-1500 GPM pump single stage for use with HS chassis. Requires primer option. | $32,378 |
| 4005-0208 | Hale AP50 PTO driven pump. Includes driver side 5" intake with cap (shipped loose). Capacity of 500GPM/1892LPM. Requires primer option. | $11,040 |
| 4005-0209 | Hale MBP PTO driven pump. Includes driver side 6" intake with cap (shipped loose). Capacity of 750GPM/2839LPM. Requires primer option. | $15,572 |
| 4005-0210 | Hale MBP PTO driven pump. Includes driver side 6" intake with cap (shipped loose). Capacity of 1000GPM/3785LPM. Requires primer option. | $15,572 |
| 4005-0211 | Hale RSD/RGA single stage pump. For use with rear mount pump body. Requires primer option. | $27,663 |
| 4005-0212 | | $26,174 |
| | Waterous S100D/TC20 single stage pump. For use with rear mount pump body. Requires primer option. | |
| 4005-0215 | Waterous CXS-C20C 1250-1500 GPM single stage pump for eMAX configurations. Requires primer option. | $34,384 |
| 4010-0159 | Fill tower locations. The water and foam fill towers shall be relocated so they are centered left to right about the apparatus after the tanks have been loaded. | $301 |
| 4010-0174 | 530 Gallon "T" Water Tank. UPF Poly III color fill towers. Note: Any foam cell(s) will reduce the overall water capacity. | $5,804 |
| 4010-0175 | 530 Gallon "R" Water Tank UPF Poly III color fill towers. Note: Any foam cell(s) will reduce the overall water capacity. | $5,313 |
| 4010-0176 | 780 Gallon "T" Water Tank. UPF Poly III color fill towers. Note: Any foam cell(s) and/or storage options through the tank will reduce the overall water capacity. | $6,425 |
| 4010-0177 | 780 Gallon "R" Water Tank. UPF Poly III color fill towers. Note: Any foam cell(s) and/or storage options through the tank will reduce the overall water capacity. | $6,348 |
| 4010-0178 | 1030 Gallon "T" Water Tank. UPF Poly III color fill towers. Note: Any foam cell(s) and/or storage options through the tank will reduce the overall water capacity. | $8,000 |
| 4010-0179 | 1030 Gallon "R" Water Tank. UPF Poly III color fill towers. Note: Any foam cell(s) and/or storage options through the tank will reduce the overall water capacity. | $7,728 |
| 4010-0180 | 1280 Gallon "T" Water Tank. UPF Poly III color fill towers. Note: Any foam cell(s) and/or storage options through the tank will reduce the overall water capacity. | $10,225 |
| 4010-0181 | 1280 Gallon "R" Water Tank. UPF Poly III color fill towers. Note: Any foam cell(s) and/or storage options through the tank will reduce the overall water capacity. | $9,611 |
| 4010-0182 | 1530 Gallon "T" Water Tank. UPF Poly III color fill towers. Note: Any foam cell(s) and/or storage options through the tank will reduce the overall water capacity. | $12,281 |

| Item No. | Description | |
|---|---|---|
| 4010-0183 | 530 Gallon "L" shaped Water Tank. UPF Poly III color fill towers. Includes lowered rear section for lower hose bed height. Note: Any foam cell(s) optioned will reduce the overall water capacity. | $8,558 |
| 4010-0184 | 780 Gallon "L" shape Water Tank. UPF Poly III color fill towers. Includes lowered rear section for lower hose bed height. Note: Any foam cell(s) optioned will reduce the overall water capacity. | $9,181 |
| 4010-0185 | 1030 Gallon "L" shape Water Tank. Includes lowered rear section for lower hose bed height. Note: Any foam cell(s) optioned will reduce the overall water capacity. UPF Poly III color fill towers. | $11,359 |
| 4010-0189 | 1530 Gallon "T" Water Tank. UPF Poly III color fill towers - tanker version. Note: Any foam cell(s) and/or storage options thru the tank will reduce the overall water capacity. | $10,917 |
| 4010-0190 | 1830 Gallon "T" Water Tank. UPF Poly III color fill towers. Note: Any foam cell(s) and/or storage options thru the tank will reduce the overall water capacity. | $12,979 |
| 4010-0191 | 2030 Gallon "T" Water Tank. UPF Poly III color fill towers. Note: Any foam cell(s) and/or storage options thru the tank will reduce the overall water capacity. | $14,354 |
| 4010-0192 | 2030 Gallon Tandem "T" Water Tank. UPF Poly III color fill towers. Note: Any foam cell(s) and/or storage options thru the tank will reduce the overall water capacity. | $15,728 |
| 4010-0193 | 2530 Gallon Tandem "T" Water Tank. UPF Poly III color fill towers. Note: Any foam cell(s) and/or storage options thru the tank will reduce the overall water capacity. | $19,600 |
| 4010-0194 | 3030 Gallon Tandem "T" Water Tank. UPF Poly III color fill towers. Note: Any foam cell(s) and/or storage options thru the tank will reduce the overall water capacity. | $23,473 |
| 4010-0211 | 2900 Gallon Tandem "T" Water Tank. UPF Poly III color fill towers. Note: Any foam cell(s) and/or storage options thru the tank will reduce the overall water capacity. Tank capacity is 2900 US gallons / 2414 Imperial gallons / 10977 Liters. | $22,467 |
| 4010-0212 | 780 Gallon "R" Water Tank for 4x4 chassis. UPF Poly III with color fill towers. Note: Any foam cell(s) and/or storage options thru the tank will reduce the overall water capacity. Tank capacity is 780 US gallon / 649 Imperial gallons / 2952 Liters. Includes modifications for 4x4 and plumbing applications as required. | $7,934 |
| 4010-0213 | 530 Gallon "L" shaped Water Tank UPF Poly III color fill towers. Includes lowered rear section for lower hose bed height. Note: Any foam cell(s) optioned will reduce the overall water capacity. Tank capacity is 530 US gallon / 441 Imperial gallons / 2006 Liters. | $8,558 |
| 4010-0214 | 1030 Gallon "T" Water Tank. UPF Poly III color fill towers. Note: Any foam cell(s) and/or storage options through the tank will reduce the overall water capacity. Tank capacity is 1030 US gallons / 857 Imperial gallons / 3898 Liters. Includes modifications for 4x4 and plumbing applications as required. | $9,999 |
| 4010-0217 | 550 Gallon "R" Water Tank UPF Poly III color fill towers. Note: Any foam cell(s) will reduce the overall water capacity. | $5,684 |
| 4010-0222 | 730 Gallon "R" Water Tank. UPF Poly III color fill towers. Note: Any foam cell(s) and/or storage options thru the tank will reduce the overall water capacity. Tank capacity is 730 US gallon / 608 Imperial gallons / 2766 Liters. | $6,115 |
| 4010-0225 | 1060 Gallon "R" Water Tank. UPF Poly III color fill towers. Note: Any foam cell(s) and/or storage options through the tank will reduce the overall water capacity. | $7,954 |
| 4010-0226 | 1030 Gallon Combo "T" Water Tank. 280 gallons water UPF Poly III blue color fill tower / 750 foam class B UPF Poly III yellow fill tower . Water tank capacity is 280 US gallons / 233 Imperial gallons / 1060 Liters. Foam tank capacity is 750 US gallons / 624 Imperial gallons / 2839 Liters. | $12,126 |
| 4010-0231 | 500 Gallon "R" Water Tank UPF Poly III color fill towers. Note: Any foam cell(s) will reduce the overall water capacity. | $5,313 |
| 4010-0232 | 830 Gallon" L" shape Water Tank. Includes lowered rear section for lower hosebed height. Note: Any foam cell(s) optioned will reduce the overall water capacity. Tank capacity is 830 US gallons / 691 Imperial gallons / 3141 Liters. Upper section recessed area for ladders/pikepoles driver side and tubes on officer side for (2) hard suction. | $11,136 |
| 4010-0233 | 3530 Gallon Tandem "T" Water Tank. UPF Poly III color fill towers. Note: Any foam cell(s) and/or storage options thru the tank will reduce the overall water capacity. | $26,161 |
| 4010-0237 | 590 Gallon "R" Water Tank. UPF Poly III color fill towers. Note: Any foam cell(s) and/or storage options through the tank will reduce the overall water capacity. | $5,338 |
| 4010-0238 | 880 Gallon "L" shape Water Tank. UPF Poly III color fill towers. Includes lowered rear section for lower hose bed height. Note: Any foam cell(s) optioned will reduce the overall water capacity. | $9,181 |
| 4010-0246 | Fill tower locations. Water fill tower to be located driver side of hosebed the Foam "A" centered and Foam "B" fill tower to be located to officer side of hosebed. | $301 |
| 4010-0247 | 720 Gallon "T" Water Tank. UPF Poly III color fill towers. Note: Any foam cell(s) and/or storage options through the tank will reduce the overall water capacity. | $5,744 |
| 4010-0248 | 560 Gallon "T" Water Tank. UPF Poly III color fill towers. Note: Any foam cell(s) and/or storage options through the tank will reduce the overall water capacity. | $4,872 |
| 4010-0249 | 720 Gallon "T" Water Tank. UPF Poly III color fill towers. Note: Any foam cell(s) and/or storage options through the tank will reduce the overall water capacity. Includes modifications for 4x4 and plumbing applications as required. | $5,744 |
| 4010-0250 | 1040 Gallon "R" Water Tank. UPF Poly III color fill towers. Note: Any foam cell(s) and/or storage options through the tank will reduce the overall water capacity. | $7,761 |

| Item No. | Description | |
|---|---|---|
| 4010-0252 | 800 Gallon "L" shape Water Tank. UPF Poly III color fill towers. Includes lowered rear section for lower hose bed height. Note: Any foam cell(s) optioned will reduce the overall water capacity. | $8,951 |
| 4010-0255 | 1250 Gallon "T" Water Tank. UPF Poly III color fill towers. Note: Any foam cell(s) and/or storage options through the tank will reduce the overall water capacity. | $10,225 |
| 4010-0257 | 780 Gallon "T" Water Tank (no "T" section to officer side of tank). UPF Poly III color fill towers. Note: Any foam cell(s) and/or storage options thru the tank will reduce the overall water capacity. Tank capacity is 780 US gallons / 649 Imperial gallons / 2952 Liters. | $6,978 |
| 4010-0258 | Fill tower locations. The water and foam fill towers shall be relocated so they are centered left to right about the apparatus after the tank has been loaded. Fill towers are to be no more than 4" above top of body sides. | $301 |
| 4010-0259 | 950 Gallon "T" Water Tank. Includes lowered upper "T" for lower hosebed height and a large Officer's side ladder compartment tank notch upper/fwd area. | $11,676 |
| 4010-0260 | Fill tower locations. The water and foam fill towers shall be re-located in the center of the hose bed pan. | $301 |
| 4010-0261 | 750 Gallon "T" Water Tank. UPF Poly III color fill towers. Note: Any foam cell(s) will reduce the overall water capacity. | $6,084 |
| 4010-0262 | 1030 Gallon half "T" Water Tank (no "T" section to officer side of tank). UPF Poly III color fill towers. Note: Any foam cell(s) and/or storage options through the tank will reduce the overall water capacity. | $8,649 |
| 4010-0266 | 1250 Gallon "R" Water Tank. UPF Poly III color fill towers. Note: Any foam cell(s) and/or storage options through the tank will reduce the overall water capacity. | $9,611 |
| 4010-0267 | 750 Gallon "R" Water Tank. UPF Poly III color fill towers. Note: Any foam cell(s) and/or storage options through the tank will reduce the overall water capacity. | $6,348 |
| 4010-0271 | 530 Gallon half "T" Water Tank (no "T" section to drivers side of tank). UPF Poly III color fill towers. Note: Any foam cell(s) and/or storage options through the tank will reduce the overall water capacity. | $5,804 |
| 4010-0274 | 1750 Gallon "T" Water Tank. UPF Poly III color fill towers. Note: total available tank capcity to be 1750 U.S. Gallons (Water or water/foam should foams cells be added). | $14,354 |
| 4010-0276 | 750 Gallon "R" Water Tank. UPF Poly III color fill towers. Note: Any foam cell(s) and/or storage options through the tank will reduce the overall water capacity. | $6,348 |
| 4010-0278 | Water tank overflow pipe upgrade to 6" ILO of standard. Requires a 14" x 14" fill tower. | $273 |
| 4010-0280 | 560 Gallon "L" shaped Water Tank. UPF Poly III color fill towers. Includes lowered rear section for lower hose bed height. Note: Any foam cell(s) optioned will reduce the overall water capacity. | $9,042 |
| 4010-0283 | 630 Gallon "R" Water Tank. UPF Poly III color fill towers. Note: Any foam cell(s) will reduce the overall water capacity. | $6,299 |
| 4010-0284 | 970 Gallon "L" shape Water Tank. Includes lowered rear section for lower hose bed height. Note: Any foam cell(s) optioned will reduce the overall water capacity. UPF Poly III color fill towers. Tank capacity is 970 US gallon / 807 Imperial gallons / 3671 Liters. | $11,359 |
| 4010-0287 | Fill tower locations. Water fill tower to be located officer side of hosebed Foam "B" fill tower to be inboard of the Class "A" and Foam "A" fill tower to be located to driver side of hosebed. | $301 |
| 4010-0288 | 600 Gallon "L" shape Water Tank. UPF Poly III color fill towers. Includes lowered rear section for lower hose bed height. Note: Any foam cell(s) optioned will reduce the overall water capacity. | $8,558 |
| 4010-0290 | 1850 Gallon "T" Water Tank. UPF Poly III color fill towers. Note: Any foam cell(s) and/or storage options thru the tank will reduce the overall water capacity.Tank capacity is 1850 US gallons / 1540 Imperial gallons / 7003 Liters. | $12,979 |
| 4010-0292 | All Exterior Poly Tank (Wet) Wall to be of 1" thick material including top sides and floor. Internal baffel and plate work will be at tank manufacturers discresion. Total tank capacity to be maintained. | $501 |
| 4010-0294 | 750 Gallon "L" shape Water Tank. UPF Poly III color fill towers. Includes lowered rear section for lower hosebed height. Note: Any foam cell(s) optioned will reduce the overall water capacity. | $9,181 |
| 4010-0296 | 530 Gallon "T" Water Tank (no "T" section to officer side of tank). UPF Poly III color fill towers. Note: Any foam cell(s) will reduce the overall water capacity. | $6,356 |
| 4010-0298 | 1530 Gallon "R" Water Tank. UPF Poly III color fill towers. Note: Any foam cell(s) and/or storage options through the tank will reduce the overall water capacity. Tank capacity is 1530 US gallon / 1273 Imperial gallons. | $11,488 |
| 4010-0299 | 600 Gallon "T" Water Tank (no "T" section to officer side of tank). UPF Poly III color fill towers. Note: Any foam cell(s) and/or storage options thru the tank will reduce the overall water capacity. Tank capacity is 600 US gallons / 499 Imperial gallons / 2271 Liters. | $7,123 |
| 4010-0301 | 500 Gallon "L" shaped Water Tank. UPF Poly III color fill towers. Includes lowered rear section for lower hose bed height. Note: Any foam cell(s) optioned will reduce the overall water capacity. | $8,839 |
| 4010-0303 | 530 Gallon "T" Water Tank (no "T" section to driver side of tank). UPF Poly III color fill towers. Note: Any foam cell(s) will reduce the overall water capacity. | $6,356 |
| 4010-0305 | Fill tower locations. Water and Foam "A" fill towers to be located driver side of hosebed and Foam "B" fill tower to be located center of the hosebed. | $301 |

| Item No. | Description | |
|---|---|---|
| 4010-0306 | 810 Gallon "L" shape Water Tank. UPF Poly III color fill towers. Includes lowered rear section for lower hose bed height. Note: Any foam cell(s) optioned will reduce the overall water capacity. | $9,535 |
| 4010-0307 | 780 Gallon 1/2 "T" Water Tank (no "T" section to driver's side of tank). UPF Poly III color fill towers. Note: Any foam cell(s) and/or storage options thru the tank will reduce the overall water capacity. Tank capacity is 780 US gallons / 649 Imperial gallons / 2952 Liters. | $6,978 |
| 4010-0308 | 1930 Gallon "T" Water Tank. UPF Poly III color fill towers. Note: Any foam cell(s) and/or storage options thru the tank will reduce the overall water capacity. | $13,667 |
| 4010-0309 | 950 Gallon "T" Water Tank. UPF Poly III color fill towers. Note: Any foam cell(s) and/or storage options through the tank will reduce the overall water capacity. | $8,325 |
| 4010-0310 | 3500 Gallon Tandem "T" Water Tank. UPF Poly III color fill towers. Note: Any foam cell(s) and/or storage options thru the tank will reduce the overall water capacity. | $26,161 |
| 4010-0315 | 1200 Gallon "R" Water Tank. UPF Poly III color fill towers. Note: Any foam cell(s) and/or storage options through the tank will reduce the overall water capacity. | $9,611 |
| 4010-0321 | 1230 Gallon "R" Water Tank. UPF Poly III color fill towers. Note: Any foam cell(s) and/or storage options through the tank will reduce the overall water capacity. | $9,611 |
| 4010-0322 | 590 Gallon "L" shaped Water Tank. UPF Poly III color fill towers. Includes lowered rear section for lower hose bed height. Note: Any foam cell(s) optioned will reduce the overall water capacity. | $9,134 |
| 4010-0325 | 1230 Gallon "R" Water Tank. UPF Poly III color fill towers. Note: Any foam cell(s) and/or storage options through the tank will reduce the overall water capacity. | $9,611 |
| 4015-0002 | Mechanical speed counter for Hale pumps. | $324 |
| 4015-0007 | Pump cooler 1/4" valve with 3/8" tubing. | $171 |
| 4015-0008 | Zinc anodes for Hale pump (PR) (1) discharge side and (1) intake side. | $327 |
| 4015-0012 | Pump shift override side panel mounted. | $754 |
| 4015-0013 | Fire Research ThrottleXcel engine throttle. Includes engine gauges. | $1,610 |
| 4015-0014 | Thermal Relief Valve - Hale TRV120. | $842 |
| 4015-0015 | Valve relief system Hale TPM. | $3,765 |
| 4015-0016 | Thermal relief valve Hale TRVL-120. | $1,525 |
| 4015-0018 | Valve Inlet MIV-E - Hale. Location: [#LOC]. | $3,485 |
| 4015-0019 | Valve inlet MIV-M Hale. Location: [#LOC]. | $2,989 |
| 4015-0020 | Valve Monarch Manual - Waterous. Location: [#LOC]. | $5,116 |
| 4015-0021 | Valve Monarch Air Actuated - Waterous. Location: [#LOC] | $5,550 |
| 4015-0022 | Mechanical pump seal - Hale. | $770 |
| 4015-0026 | Electronic speed counter for Waterous pumps. | $321 |
| 4015-0027 | Pump Shift Override Under L1 Compartment. | $754 |
| 4015-0029 | Hale pressure relief valve. | $1,321 |
| 4015-0030 | Waterous pressure relief valve. | $1,476 |
| 4015-0031 | Valve Relief System - Dual TPM Required for pump rating 2250 GPM and above. | $4,455 |
| 4015-0033 | Hale 2-Stage Power Operated Transfer Valve. | $1,748 |
| 4015-0035 | Waterous 2-Stage electronic transfer valve. | $1,476 |
| 4015-0036 | 6" Additional Intake for 2250 GPM Pump. | $2,016 |
| 4015-0037 | Engine throttle vernier. | $368 |
| 4015-0039 | Pump seal mechanical for Waterous pump. | $725 |
| 4015-0041 | Valve Monarch Electric - Waterous. Location: [#LOC]. | $5,680 |
| 4015-0042 | Waterous Overheat Protection Manager. | $1,086 |
| 4015-0043 | Anodes for Hale CAFSPRO Pump (Pair) (1) Discharge side and (2) Intake Side. | $492 |
| 4015-0044 | Anodes for Waterous pump - (Pair) (1) discharge side and (1) intake side. | $397 |
| 4015-0045 | Throttle Selection Switch on Pump Operator's Panel for Back-Up of Relief and Throttle System. | $558 |
| 4015-0046 | Hale pump shift override. | $1,201 |
| 4015-0047 | Additional Hale Primer Valve. Located: [#LOC]. | $617 |
| 4015-0048 | Pump Shift Override - driver's side under running board forward of running board tray if applicable. | $754 |
| 4015-0049 | Extend Fire Pump Grease Zerks to Operator's Panel | $434 |
| 4015-0050 | Relocate Primer to the Outside of the Frame Rail on Driver's Side | $96 |
| 4015-0051 | Two 4.5" Steamers for Hale Qflo Pump | $769 |
| 4015-0054 | Additional Waterous Primer. Located: [#LOC]. | $1,383 |
| 4015-0056 | Air operated master pump drain (upgrade). | $225 |
| 4015-0057 | Special controls and regulator requirements for Seattle. Install RV-1 (Pressure Regulating Valve) going to pump shift to allow a max of 60 PSI on pump. | $420 |
| 4015-0058 | Engine shut-down switch on pump panel. Includes coverered access. | $342 |
| 4015-0062 | Primer indicator light shall be provided on the pump operator's panel color to be red. | $118 |
| 4015-0063 | TPM Relief Valve outlet to be extended to the side of truck under runningboard or compartment. | $291 |
| 4015-0064 | Hale Auto Fill/Thief Inlet 2.5" Tank Fill "AutoFill" Automatic Tank Fill Valve Location: [#LOC]. | $4,437 |
| 4015-0065 | Schedule 40 stainless steel piping. | $1,227 |
| 4015-0066 | Trident Pump Primer W/3 Barrel Push Button Control. (In addition to standard.) | $1,097 |
| 4015-0068 | 6" intake valve Akron electric with relief. Location: [#LOC]. | $3,700 |

| Item No. | Description | |
|---|---|---|
| 4015-0069 | MIV's Pressure Relief and Atmospheric Relief (intake relief) to be plumbed to top of heat pan. | $157 |
| 4015-0070 | WATEROUS OIL PRIMER | $74 |
| 4015-0071 | Valve Relief Thermal - Hale TRVL-120 W/Audible Alarm | $1,539 |
| 4015-0074 | Manual remote operated master pump drain. The master drain control shall be clearly marked and placed in accessible location on driver side pump panel. | $329 |
| 4015-0075 | Pump Seal Mechanical - Hale. For use with Tradition Hale pumps. | $2,388 |
| 4015-0080 | 6" Cap Vented "IPOS" | $18 |
| 4015-0081 | Hale Semi-Automatic Priming push-button control. | $514 |
| 4015-0082 | Electric Over Air Actuation Pump Cooler Valve | $446 |
| 4015-0083 | Electric Over Air Actuation Engine Cooler Valve | $287 |
| 4015-0084 | Pump Air Blow Out with 1/4" Snubber Valve. | $256 |
| 4015-0085 | Auto Tank to Pump Operation. When Switched to Automatic Mode The Tank Valve will Close When Suction Pressure Reaches 15 PSI & Opens When Suction PressureI Drops Below 15 PSI. | $1,885 |
| 4015-0086 | Pump Cooler 1/4 Turn 3/8" Valve | $269 |
| 4015-0087 | Engine Cooler 1/4 Turn 3/8" Valve | $269 |
| 4015-0088 | Portable/Qmax Pump Shall be with Manifold and check valves for Front Bumper Turret and Ground Sweep. To be use dearing Pump&Roll operation. | $921 |
| 4015-0089 | Extend exhaust pipe from dunnage pan mounted portable pump in line with main exhaust system using stainless steel flexible pipe. | $122 |
| 4015-0090 | Akron Test Port for Master Gauges | $98 |
| 4015-0091 | Pump cooler with .75" 1/4 turn valve. | $304 |
| 4015-0092 | Hale Fill Thieft Steamers to be Flush + 2 Location [#LOC] | $1,629 |
| 4015-0109 | Galvanized Victaulic Coupling. All Victaulic couplings shall galvanized. | $223 |
| 4015-0111 | Ferrell Compression Fittings for all Plastic Tubing in the Pump module plumbing. | $682 |
| 4015-0125 | Red Switch Cover on Master Drain Switch. | $14 |
| 4015-0126 | Hale PTO/MIDSHIP 250GPM to 1000gpm Pump Pressure Relief Valve | $2,334 |
| 4015-0127 | Fire Research Infinity vernier type engine throttle. | $706 |
| 4015-0129 | Waterous Overheat Protection Manager with audible alarm. | $1,020 |
| 4015-0130 | Additional Trident Primer Valve Located: [#LOC]. Requires aux air tank if connected to front or rear intake. | $371 |
| 4015-0131 | Hale Anode Pro Kit (3) Anodes with Flange. One on each suction tube and one anode on the discharge located as close to the center of the pump as possible. | $1,151 |
| 4015-0133 | Anode for Darley pump - (1) intake side. | $428 |
| 4015-0134 | Class 1 Engine Twister throttle vernier | $892 |
| 4015-0135 | Mechanical speed counter for pumps. | $395 |
| 4015-0138 | 6" Inlet Valve Manual Gear Operated with Relief. Location: [#LOC]. | $3,016 |
| 4015-0139 | Darley Pump Overheat Thermal relief valve shall be provided with a light located on pump operator's panel. | $767 |
| 4015-0144 | Manual remote operated master pump drain. The master drain control shall be clearly marked and placed in accessible location rearward below running board on driver side or L1 compartment. | $329 |
| 4015-0150 | Darley pump shift override. | $754 |
| 4015-0152 | Hale pump shift override. Pump shift to be recess behind pump operator pump panel with door. | $1,460 |
| 4015-0157 | Waterous 2-Stage Electric Transfer Valve Manual Override locate drive side pump panel. | $277 |
| 4015-0159 | Valve Inlet MIV-E - Hale. Location: [#LOC]. | $3,485 |
| 4015-0160 | Pump Shift Override Under R1 Compartment | $754 |
| 4015-0163 | Customer supply existing midship pump shall be reused on new chassis. | $6,679 |
| 4015-0164 | Factory Pump Test. | $479 |
| 4015-0166 | Pump cooler automatic with 3/8" tubing. Include a check valve that is install between the pump discharge and tank that will automatically close when drafting. | $147 |
| 4015-0172 | Primer indicator light shall be provided on the pump operator's panel color to be red. The indicator light shall be upgraded to a LED indicator light IPOS. | $179 |
| 4015-0175 | Additional control and air bleeder for the MIV-E to provide controls at: [#LOC]. | $562 |
| 4015-0177 | Additional Anode for Darley pump. Location: Discharge side of pump. | $428 |
| 4015-0178 | Anodes for Waterous pump - (Three) (1) discharge side (1) intake side and (1) inside of tank. | $599 |
| 4015-0179 | Waterous Monarch Electric valve manual override control located on pump panel same side as Waterous intake valve is. | $397 |
| 4015-0180 | 6" Intake Akron Electric Valve and 9323 Controller with relief. Location: [#LOC]. | $3,700 |
| 4015-0181 | Pump cooler with .75" 1/4 lift lever turn valve. | $304 |
| 4015-0182 | Engine cooler with .75" 1/4 lift lever turn valve. | $304 |
| 4015-0183 | Test Port 1/4" Drain Valve. | $82 |
| 4015-0186 | Trident Pump Primer W/3 Barrel Push Button Control. (In place of standard primer.) Requires a 15.6 CFM or larger air compressor. | $212 |
| 4015-0187 | Anodes Pro System for Hale pump (QTY3) (1) discharge side and (2) intake side with one on each side of intake. | $637 |

| Item No. | Description | |
|---|---|---|
| 4015-0188 | Red Switch Cover on rear dump valve switches. | $14 |
| 4015-0190 | Remove pump from donor chassis and rebuild Hale QFlow 1250. | $10,391 |
| 4015-0191 | Valve Monarch Electric - Waterous. Location:Front Intake with Elkhart Relief valve. | $4,974 |
| 4015-0192 | Intake adapter 6" FNST x 6" MNST for pump intake. | $320 |
| 4015-0193 | Hale 3" Auto Fill w/Thief Inlet. Locate: [#LOC]. | $6,463 |
| 4015-0194 | Discharge manifold to be Class1 IPOS. For Dumfries Triangle VFD Only. | $2,639 |
| 4015-0197 | Pump cooler with .50" 1/4 turn valve. Include a .50" check valve to prevent back flow of water into the pump if the valve is left open. | $304 |
| 4015-0198 | Front Mounted Pump Gear Box IPOS | $686 |
| 4015-0204 | Trident Manually operated master pump drain. The master drain shall be clearly marked and placed in accessible location on pump panel. | $166 |
| 4015-0209 | Hale Fluid Primer IPOS. | $141 |
| 4015-0210 | Pump cooler with Innovative Control 1/4 turn valve with "T" handle and label. | $164 |
| 4015-0211 | Anodes for Waterous pump - (2) at intake side. | $397 |
| 4015-0212 | Trident Automatic Pump Primer.(In place of standard primer.) | $887 |
| 4015-0214 | Additional Darley Primer Valve. Located: [#LOC]. | $1,003 |
| 4015-0215 | 5" Intake Akron Hand Wheel Valve with relief. Location: drive side pump panel | $4,261 |
| 4015-0221 | Additional 9323 electric controller for 6" intake electric valve. Location officer side pump panel. Include 1/4" air bleeder. | $1,339 |
| 4015-0222 | Waterous "H Manifold" shall be located on the left and right side pump. | $1,868 |
| 4015-0224 | Hale Pump Shift Override - driver's side under runningboard forward of runningboard tray. Pump shift to be flush with runingboard when is in gear. | $1,201 |
| 4015-0225 | Zinc anodes for Hale pump (3) (2) discharge side and (1) intake side. | $273 |
| 4015-0231 | Qmax Pump gear box to be "R" IPOS. | $836 |
| 4015-0233 | Throttle Selection Switch on Pump Operator's Panel to be recess with cover. | $573 |
| 4015-0234 | Control for engine cooler. Includes Innovative Controls 1/4 turn valve with "T" handle and label. Requires engine cooler option. | $360 |
| 4015-0235 | Pump Shift Override - driver's side under running board rearward of running board tray if applicable. (Rod linkage in place of cable.) | $1,201 |
| 4015-0237 | Trident Automatic Pump Primer w/gauge. IPOS | $1,104 |
| 4015-0238 | Hale electric primer (oil-less). | $2,204 |
| 4015-0239 | Waterous electric primer (oil-less). | $2,253 |
| 4015-0240 | Darley electric primer (oil-less). | $2,101 |
| 4015-0241 | Trident primer W/2 barrel push button control. For use with up to 1000 GPM pumps. | $1,550 |
| 4015-0242 | Trident primer W/3 barrel push button control. For use with 1250 GPM and larger pumps. Requires 15.6 CFM or large engine air compressor. | $1,851 |
| 4015-0248 | Pump Air Blow Out with Innovative Controls 1/4" valve w/1/4 turn handle. | $256 |
| 4015-0249 | Pump cooler Innovative Controls 3/4" include lift lever with ergonomic grip. | $304 |
| 4015-0251 | Zinc anodes for Hale pump (3) (1) discharge side and (2) in intake manifold side. | $273 |
| 4015-0252 | Hale Anode Pro Kit (3) Anodes with Flange. One on each suction tube and one anode on the discharge located as close to the center of the pump as possible. Display monitor location: Pump panel. | $1,151 |
| 4015-0253 | Hale Anode Pro Kit (3) Anodes with Flange. One on each suction tube and one anode on the discharge located as close to the center of the pump as possible. Display monitor location: Pump panel. | $1,151 |
| 4015-0254 | Flame Plated Impeller Hubs Waterous pump. | $718 |
| 4015-0255 | Pump 6" inlet both side shall be recess to allow room for a Akron 7983 piston valve to fit and not extend out pass the running boards. | $1,200 |
| 4015-0256 | Trident Automatic Pump Primer w/gauge. For use with 1250 GPM and larger pumps. Requires 15.6 CFM or large engine air compressor. | $2,388 |
| 4015-0257 | Waterous 6" Jamesbury Electric Inlet Valve. Location: [#LOC] | $5,369 |
| 4020-0001 | Additional tank sump. | $324 |
| 4020-0002 | Dump Valve Mounting Plate | $598 |
| 4020-0004 | Newton dump mounting plate. | $569 |
| 4020-0005 | Fill Tower(s) to extend 6" above body. | $392 |
| 4020-0006 | Direct 1.0" Water Tank Fill with Akron Valve Terminate with .75 Hose Bib. Location: driver side pump panel | $816 |
| 4020-0007 | 1.5" Tank Drain Akron Manual Valve with pull cable control at left pump panel. Valve shall be located at the tank sump and extend plumbing below frame rail. | $858 |
| 4020-0008 | Water Overflow Pipe to be cut down an additional 3". | $156 |
| 4020-0009 | Water fill tower to have a butterfly latch. | $188 |
| 4020-0012 | Vision Mark tags for water and foam fill towers ipos tags. | $78 |
| 4020-0013 | Sight Level Water Gauge form into front of water tank as a part of the tank. | $206 |
| 4020-0015 | Rear tank dump. Includes painted steel assembly with manually actuated valve on driver side of dump assembly. Includes integral manual extension chute. | $2,315 |

| Item No. | Description | |
|---|---|---|
| 4020-0016 | Rear tank dump. Includes stainless steel assembly with manual actuated valve on driver side of dump assembly. Includes integral manual extension chute. | $2,814 |
| 4020-0017 | Rear tank dump. Includes stainless steel assembly with electical actuated valve and integral manual extension chute. | $3,635 |
| 4020-0018 | Rear tank dump. Includes painted steel assembly with manual actuated valve on top of dump assembly. For use with slip on extension and chute. | $1,394 |
| 4020-0019 | Rear tank dump. Includes stainless steel assembly with manually actuated valve on top of dump assembly. For use with slip on extension and chute. | $1,679 |
| 4020-0020 | Rear tank dump. Includes stainless steel assembly with electrically actuated valve. For use with slip on extension and chute. | $2,494 |
| 4020-0021 | Rear tank dump. Includes painted steel assembly with manually actuated valve on top of dump assembly. Includes integral swivel chute with manual telscopic extension. | $3,458 |
| 4020-0022 | Rear tank dump. Includes stainless steel assembly with manually actuated valve on top of dump assembly. Includes integral swivel chute with manual extension. | $5,004 |
| 4020-0023 | Rear tank dump. Includes mild finish steel assembly with manually actuated valve on driver side of dump assembly. Includes integral electric extension chute. | $3,536 |
| 4020-0024 | Rear tank dump. Includes stainless finish steel assembly with electrcially actuated valve. Includes integral manual extension chute. | $3,895 |
| 4020-0025 | Rear tank dump. Includes stainless steel assembly with electric actuated valve and integral electrical extension chute. | $5,007 |
| 4020-0027 | Slip-on stainless steel dump extension and chute. Includes beavertail mounted removable support arm bracket and tailboard mounted storage tray (directly below dump) with retaining straps. | $1,736 |
| 4020-0028 | Slip-on mild finish dump extension and chute. Includes (1) beavertail mounted removable support arm bracket and tailboard mounted storage tray (directly below dump) with retaining straps. | $1,340 |
| 4020-0029 | Driver and officer side tank dumps. Includes stainless steel assembly with electrically actuated valve and integral electrical extension chute. | $8,629 |
| 4020-0030 | Driver and officer side tank dumps. Includes painted steel assembly with electically actuated valve and integral electrical extension chute. | $6,320 |
| 4020-0031 | Fill Tower(s) to be 24" tall due to the ROM hosebed cover and to be located 27" off front of the tank due to drum of ROM hosebed cover. | $301 |
| 4020-0032 | Dealer supplied dump extension chute and items for storage in or on the body. To be provided by E-ONE will be (1) support arm bracket and (2) mount points on trailing end of beavertails (support arm bracket to be shipped loose). | $252 |
| 4020-0038 | Rear tank dump. Includes mild finish steel assembly with manually actuated valve on top of dump assembly. Includes integral manual extension chute. | $2,315 |
| 4020-0039 | Rear tank dump. Includes painted steel assembly with electric actuated valve and integral electric extension chute. | $3,687 |
| 4020-0041 | Additional Dump valve/extension switching location in Cab accessible to driver. | $392 |
| 4020-0045 | Notch officer side water tank (overall tank capacity will be reduced for application). Notch to allow for a 2.5" hosebed discharge to be routed into the hosebed on officer side. | $422 |
| 4020-0046 | Notch driver/officer side water tank (overall tank capacity will be reduced for application). Notch to allow for hosebed discharge(s) to be routed into the hosebed. | $422 |
| 4020-0054 | Rear tank dump. Includes painted steel assembly with electric actuated valve on top of dump assembly. Includes integral swivel chute with manual extension. | $5,046 |
| 4020-0056 | Tank sleeve for rear or hosebed (low hosebed applications) discharge. | $277 |
| 4020-0059 | Rear tank dump. Includes painted steel assembly with electrically actuated valve. For use with slip on extension and chute. | $1,960 |
| 4020-0062 | Water tank fill tower to be approximately 8" tall IPOS. | $180 |
| 4020-0065 | Notch driver side water tank (overall tank capacity will be reduced for application). Notch to allow for a 2.5" hosebed discharge to be routed into the hosebed on driver side. | $422 |
| 4020-0066 | Notch driver side water tank (overall tank capacity will be reduced for application). Notch to allow a booster reel to be mounted in hosebed storage pan. | $422 |
| 4020-0067 | Water Tank Notch for ladder storage above tank for (1) stokes basket. | $590 |
| 4020-0068 | The Newton mounting plate shall be fitted with a stainless steel plate to cap the tank until the dealer supplied dump has been installed. | $277 |
| 4020-0069 | Notch driver side water tank (overall tank capacity will be reduced for application). Notch to allow for (2) 1.5" hosebed discharges to be routed into the hosebed on driver side. | $422 |
| 4020-0070 | Vertical "A" style sleeve thru tank for 50' boom support. | $699 |
| 4020-0072 | Water Tank Notch for HOT SHOT hosebed storage pan. | $224 |
| 4020-0073 | Water tank floor to be 1" thick material ipos 1/2" thick material. | $474 |
| 4020-0074 | Water tank notched at forward top face. Notch along forward top face of tank for cylinders of the electric hosebed cover clearance. | $378 |
| 4020-0075 | 6" overflow pipe IPO 4" over flow pipe. | $584 |
| 4020-0076 | Jet Dump 2" IPO 1.5". | $630 |

| Item No. | Description | |
|---|---|---|
| 4020-0082 | Rear tank dump. Includes stainless steel assembly with manually actuated valve on driver side of dump assembly. For use with slip on extension and chute. | $1,986 |
| 4020-0084 | 4" Water Tank Overflow piping to be extended below chassis frame rails and piped so as not to discharge over rear springs axle or fuel tank. | $378 |
| 4020-0091 | Water tank notched at top driver side (overall tank capacity will be reduced). Notch along driver side top of tank for 2.5" rear discharge clearance. | $590 |
| 4020-0099 | Tank sleeve for rear discharge(s). | $277 |
| 4030-0041 | Turret bumper Akron Fire Fox ARFF. | $11,275 |
| 4030-0046 | TFT Tornado RC Bumper Turret with Joystick. [#LOC]. | $11,995 |
| 4030-0051 | TFT Tornado RC Bumper Turret with Panel Control. [#LOC]. | $11,995 |
| 4030-0073 | Front bumper turret Akron Forestry 3462 with a 3293 low flow adjustable nozzle. Include 6035 Joystick 2" electric valve and quick disconnect. [#LOC]. | $10,516 |
| 4030-0078 | Akron Fire Fox roof turret 3463 with Joystick control. | $11,275 |
| 4100-0033 | 30 gallon integral foam tank for [#LOC]. UPF Poly III [#COL] fill tower. Foam tank capacity will reduce the water tank capacity. | $1,144 |
| 4100-0034 | 10 gallon integral foam tank for [#LOC]. UPF Poly III [#COL] fill tower. Foam tank capacity will reduce the water tank capacity. | $982 |
| 4100-0035 | 20 gallon integral foam tank for [#LOC]. UPF Poly III [#COL] fill tower. Foam tank capacity will reduce the water tank capacity. | $1,057 |
| 4100-0036 | 40 gallon integral foam tank for [#LOC]. UPF Poly III [#COL] fill tower. Foam tank capacity will reduce the water tank capacity. | $1,247 |
| 4100-0037 | 50 gallon integral foam tank for [#LOC]. UPF Poly III [#COL] fill tower. Foam tank capacity will reduce the water tank capacity. | $1,337 |
| 4100-0038 | 100 gallon integral foam tank for [#LOC]. UPF Poly III [#COL] fill tower. Foam tank capacity will reduce the water tank capacity. | $2,484 |
| 4100-0052 | 500 Gallon integral foam tank for [#LOC]. UPF Poly III [#COL] fill tower. The fill tower shall include a an expansion dome. Foam tank capacity will reduce the water tank capacity. Tank capacity is 500 US gallons / 416 Imperial gallons / 1892 Liters. | $7,686 |
| 4100-0053 | 30 Gallon external foam tank for [#LOC]. UPF Poly III [#COL]. Locate in storage pan. | $3,418 |
| 4100-0055 | 250 Gallon integral foam tank for [#LOC]. UPF Poly III [#COL] fill tower. The fill tower shall include an expansion dome. Foam tank capacity will reduce the water tank capacity. Tank capacity is 250 US gallons / 208 Imperial gallons / 946 Liters. | $3,900 |
| 4100-0056 | 180 Gallon integral foam tank for [#LOC]. UPF Poly III [#COL] fill tower. The fill tower shall include an expansion dome. Foam tank capacity will reduce the water tank capacity. Tank capacity is 180 US gallons / 149 Imperial gallons / 681 Liters | $4,027 |
| 4100-0058 | 25 gallon integral foam tank for [#LOC]. UPF Poly III [#COL] fill tower. Foam tank capacity will reduce the water tank capacity. | $1,136 |
| 4100-0059 | 230 Gallon integral foam tank for [#LOC]. UPF Poly III [#COL] fill tower. The fill tower shall include an expansion dome. Foam tank capacity will reduce the water tank capacity. Tank capacity is 230 US gallons / 191 Imperial gallons / 870 Liters. | $4,304 |
| 4100-0062 | Label on Foam Tank to read "Class A Foam" or "Class B Foam" as necessary. | $30 |
| 4100-0064 | 30 Gallon external foam tank for [#LOC]. UPF Poly III [#COL] tower to be accessible from driver side. Includes bolt-on .187" diamond plate cover with end panel (if applicable) and cutout in top panel for fill tower. Locate in storage pan over pump offset to driver side. | $1,714 |
| 4100-0069 | 265 gallon integral foam tank for [#LOC]. UPF Poly III [#COL] fill tower. Foam tank capacity will reduce the water tank capacity. 265 US gal/220 Imperial gal/1003 liters | $4,304 |
| 4100-0070 | 200 gallon integral foam tank for [#LOC]. UPF Poly III [#COL] fill tower. Foam tank capacity will reduce the water tank capacity. | $3,075 |
| 4100-0072 | 150 gallon integral foam tank for class A foam. UPF Poly III Green fill tower. Foam tank capacity will reduce the water tank capacity. | $3,348 |
| 4110-0002 | Foam tank (B) outlet. Includes 1" male adapter and connector (ship loose). Outlet location: [#LOC]. | $972 |
| 4110-0003 | Stainless steel foam can piercer for bottom of foam fill tower. Requires foam fill to be 16" X 16" wide. | $953 |
| 4110-0004 | Foam tank shutoff. 1/4 turn shut off on each connection to the foam tank - foam discharge refill and sending unit. The Valves shall be located at the tank. | $760 |
| 4110-0005 | Direct 1.5" Foam Tank Fill with Akron 1.5" Valve. A 1.5" FNST tank fill connection with rocker lug plug and a replaceable .25" mesh strainer on the left pump panel. | $767 |
| 4110-0006 | Foam tank outlet. Includes 1" male adaptor and connector (ship loose). Outlet location: [#LOC] | $971 |
| 4110-0011 | 1.5" Foam tank drain Akron manual valve. | $710 |
| 4110-0013 | Foam tank outlet. Includes 1.5" MNST with cap. A 1.5" FNST fitting shall be included in the loose equipment . Outlet location: [#LOC]. | $1,065 |
| 4110-0014 | Foam tank (B) outlet. Includes 2" male adapter. Outlet location: [#LOC]. | $1,405 |
| 4110-0015 | Foam tank outlet. Includes 1" Female adaptor and connector (ship loose). Outlet location: [#LOC]. | $971 |

| Item No. | Description | |
|---|---|---|
| 4110-0017 | Direct 1.5" Foam Tank Fill with Akron 1.5" Valve. A 1.5" FNST tank fill connection with rocker lug plug with a replaceable strainer on left side pump panel. | $767 |
| 4110-0018 | Foam tank (B) outlet. Includes 1" male camlock adaptor and connector (ship loose). Outlet location: driver side pump panel. | $971 |
| 4110-0019 | All foam service valves to be stainless steel IPOS. No PVC valves to be used. | $492 |
| 4110-0020 | Foam tank outlet. Includes 1" male camlock adaptor and connector (ship loose). Outlet location: (1)driver and (1) officer side pump panel. | $971 |
| 4405-0017 | Booster Reel. Reel to have capacity of 200' of 1" (not included). Includes (reel side) stirrup style rewind switch. Locate [#LOC]. | $2,759 |
| 4405-0020 | Booster Reel. Reel to have capacity of 200' of 1" (not included). Includes stirrup style rewind switch. Locate rear body compartment. | $2,970 |
| 4405-0021 | Booster reel - front bumper. Center between frame rails. Will hold 100' of 1'' or 150' of 3/4'' booster hose. | $6,396 |
| 4405-0026 | Booster Reel Aluminum shall hold 100' of 1" or 150' of .75" Hose Reel installed in [#LOC]. A rewind switch shall be provided at the reel. | $2,742 |
| 4405-0036 | Booster Reel. Reel to have capacity of 200' of 1" (not included). Includes rewind switch on wall adjacent to reel. Locate rear upper body compartment. | $2,970 |
| 4405-0041 | Booster Reel. Reel to have capacity of 200' of 1.5" (not included). Locate [#LOC]. | $2,943 |
| 4405-0042 | Booster Reel. Reel to have capacity of 200' of 1.5" (not included). Includes stirrup style rewind switch. Locate rear body compartment. | $3,155 |
| 4405-0044 | Booster Reel. Reel to have capacity of 200' of 1" (not included). Includes rewind switch on officer side wall adjacent to reel. Locate rear body compartment. | $2,970 |
| 4405-0045 | Booster Reel. Reel to have capacity of 200' of 1" (not included). Locate [#LOC]. | $2,759 |
| 4405-0046 | Booster Reel. Reel to have capacity of 100' of 1" (not included). Includes rewind switch located on bottom of adjustable shelf on far right side corner. Locate rear body compartment offset to officer side as far as possible. | $2,742 |
| 4405-0047 | Drop down booster reel mounted roller assembly. For use with rear compartment mounted booster reel. | $369 |
| 4405-0048 | Booster Reel. Reel to have capacity of 200' of 1" (not included). Locate rear body compartment. Includes rewind switch on driver side wall adjacent to reel. | $2,970 |
| 4405-0049 | Booster Reel. Reel to have capacity of 200' of 1 hose with 1/2hp motor. | $3,055 |
| 4405-0051 | Booster reel to hold up to 300' of 1" hose (not included) locate on officer side of dunnage storage pan. | $3,385 |
| 4405-0052 | Hose Reel Dry 300'X1.75 Hose. Locate in storage pan. | $2,478 |
| 4405-0054 | Hose Reel Dry for 250' X 1.75 Collapsible Hose | $1,862 |
| 4405-0055 | Booster Reel. Reel to have capacity of 150' of 1" (not included). Locate [#LOC]. Includes body/beavertail mounted rewind switch located to outboard side of reel location. | $2,759 |
| 4405-0058 | Booster Reel. Reel to have capacity of 150' of 1" (not included). Locate rear body compartment. | $2,759 |
| 4405-0060 | Booster reel Akron Elect valve with a 9315 controller to read pressure only- Behind Front of Cab. Center between frame rails. To hold 100' of 1'' | $6,616 |
| 4405-0061 | Akron Booster reel - front bumper. Center between frame rails. Will hold 150' of 1'' or 250' of 3/4'' booster hose. | $6,838 |
| 4405-0064 | Booster Reel Akron Model ERWB-16=28. Includes stirrup style rewind switch. Locate rear body compartment. "Hose Not Included" Capacity; up to 150' of .75" or 100' of 1" redline. | $2,970 |
| 4405-0065 | Booster Reel. Reel to have capacity of 200' of 1" with Electric Valve Control (hose not included). Locate rear body compartment. | $3,518 |
| 4405-0077 | Booster Hose Reel 12 Volt. Shall hold 200' of .75" Booster Hose (Hose not included) Includes stirrup style rewind switch below body. Reel Location: [#LOC] | $2,760 |
| 4405-0078 | Booster Reel with 1.5" Air Actuated Valve control at operator panel. Reel to have capacity of 200' of 1" (not included). Locate rear body compartment. | $2,970 |
| 4405-0081 | Booster Reel. Reel to have capacity of 150' of 1" (not included). Locate officer side of pan. | $2,759 |
| 4405-0083 | Booster Reel Akron. Reel to have the capacity of 250' of 3/4 of redline. Includes rewind switch locate next to reel. Locate rear body compartment. "Hose Not Included". | $2,706 |
| 4405-0085 | Booster Reel Riser for rollers. Locate (1) left and (1) right side on hose reel pan. | $180 |
| 4405-0090 | Booster Reel with air actuated control at pump operator panel. Shall hold 200' of 1" Booster Hose (Hose not included) installed in [#LOC] | $2,638 |
| 4405-0093 | Booster Reel. Reel to have capacity of 200' of 1" (not included). Includes rewind switch mounted on the exterior of compartment (rear body) on the officer's side. Locate reel in the rear body compartment. | $2,970 |
| 4405-0095 | Booster Hose Reel 12 Volt located on the floor of B1. Shall hold 200' of .75" Booster Hose (Hose not included). Includes rewind switch officers side of B1 wall close to opening for easy accessability. | $2,760 |
| 4405-0096 | The booster reel manual crank shall have the crank handle extended an additional 12" beyond standard length. | $99 |

| Item No. | Description | |
|---|---|---|
| 4405-0097 | Booster Reel Aluminum shall hold 200' of 1" flat lay Hose. installed in [#LOC]. A rewind switch shall be provided at the reel. | $2,742 |
| 4405-0098 | Booster Reel 100' X 1" or 150' x 0.75" hose (Hose not included) model EF4026-19-20-8. Located: [#LOC]. | $2,755 |
| 4405-0100 | Booster reel rewind switch. Switch located [#LOC]. | $120 |
| 4405-0101 | Hannay EPFF20-30-31 booster reel. Reel to have capacity of 150' of 1" (not included). Locate pump dunnage offset to officer side. Includes body/beavertail mounted rewind switch located to outboard side of reel location. | $2,759 |
| 4405-0104 | Booster Reel. Reel to have capacity of 100' of 1" (not included). Includes rewind switch installed in [#LOC] for Dry Chemical. | $2,742 |
| 4405-0106 | Air actuated 1.5" valve and with pump panel mounted controller. For use with dealer installed booster reel and roller assembly in B1. Includes air blow-out. | $1,303 |
| 4405-0107 | Booster Reel. Reel to have capacity of 200' of 1" (not included). Includes rewind switch on wall adjacent to reel. Locate rear body compartment. | $2,970 |
| 4405-0109 | Booster Reel. Reel to have capacity of 300' of .75" (not included). Locate [#LOC]. | $2,759 |
| 4405-0110 | Booster Reel air actuated 1.5" valve with plumbing to terminate in B1 and control at pump operator panel. For use with dealer installed booster reel and roller assembly in B1. | $1,513 |
| 4405-0112 | Booster Reel. Reel to have capacity of 200' of 1" (not included). Includes rewind switch mounted on the reel. Locate rear body compartment. | $2,970 |
| 4405-0113 | Booster Hose Reel 12 Volt located dunnage pan offset to officer side. Shall hold 200' of .75" Booster Hose (Hose not included). Includes rewind switch officers side pump panel. | $2,760 |
| 4405-0114 | Booster Reel air actuated valve. Reel to have capacity of 200' of .75" (not included). Includes rewind switch on officer side wall adjacent to reel. Locate rear body compartment. | $2,970 |
| 4405-0115 | Booster Reel. Reel to have capacity of 150' of 3/4" or 100' of 1" booster hose. Hose is sold seperately. Location: [#LOC]. | $2,760 |
| 4405-0117 | Booster Reel. Reel to have capacity of 100' of 1" (not included). Reel installed in dunnage pan offset to driver side. | $2,742 |
| 4405-0118 | Hose Reel Dry for 500'' X 1" Forestry Collapsible Hose (REEL MODEL SBEPC28-23-24). | $3,056 |
| 4405-0119 | Hose Reel 1.5" manual valve with pump panel mounted controller. For use with dealer installed booster reel in dunnage pan officer side area. Connection hose to have extra length so dealer can locate reel on officer side of dunnage pan. (dealer to make final connections to switches). | $1,106 |
| 4405-0121 | Akron Booster reel - front bumper. Center between frame rails. Will hold 150' of 1'' or 250' of 3/4'' booster hose. Include painted black Durabak cover and skid plate | $6,838 |
| 4405-0123 | Booster Reel EF26-23-24-12. Reel to have capacity of 150' of 1" Niedner or Reeltex (hose not included). Locate driver side of pan. | $2,862 |
| 4405-0126 | Hose Reel Dry for 500'' X 1" Forestry Collapsible Hose (REEL MODEL SBEPC28-23-24). Located: [#LOC]. | $3,056 |
| 4405-0130 | Booster Reel 100' X 1" or 150' x 0.75" hose (Hose not included) blow out valve included model EF4126-19-20-8. Located: [#LOC]. | $2,755 |
| 4405-0134 | Hose Reel Dry 300'X 2.0" Hose. (hose not included). Locate [#LOC]. | $2,311 |
| 4405-0135 | Booster Reel w/2" Elkhart Electric Unibody Valve with UICS-2 CAFS Controller. Reel to have capacity of 200' of 1" (not included). Locate driver side of pan. | $5,711 |
| 4405-0136 | Drop down booster reel mounted roller assembly. For use with rear compartment mounted booster reel. To extend outward when deployed to route and guide hose past rescue style ladder mounted to rear of body. | $416 |
| 4405-0139 | Booster reel with 200' of 1" red hose. Locate reel in driver side pan. Reel to be painted job color white. | $3,380 |
| 4405-0141 | Booster reel to have the following bearings added to each side of the reel in place of the standard bearing. 1" S.A. Bronze bearing complete E-COATED W/304 SST HOUSING Bearing. Include extending grease zerk fitting to rear panel adjacent to roller assembly. | $413 |
| 4405-0142 | Booster Reel with manual hand wheel control Akron valve. Reel to have capacity of 200' of 1" (not included). Locate [#LOC]. | $3,911 |
| 4405-0143 | Rollerless slide out booster reel roller assembly. To extend outward when deployed to route and guide hose past body mounted options like access ladder etc. | $646 |
| 4410-0065 | Foam tank outlet. Includes 1" MNST adaptor with cap. Outlet location: [#LOC]. | $971 |
| 4415-0008 | 1.5" front bumper discharge Akron manual valve. | $1,598 |
| 4415-0009 | 1.5" Front Bumper Discharge Hale Manual Valve | $1,705 |
| 4415-0010 | 1.5" Front Bumper Discharge Akron Electric Valve | $3,298 |
| 4415-0011 | 2.5" Front Bumper Discharge Akron Electric Valve | $3,458 |
| 4415-0012 | 1.5" Crosslay with Akron manual valve. Location: [#LOC]. | $996 |
| 4415-0014 | 2.5" Left Pump Panel Discharge Akron Manual Valve. Location: [#LOC]. | $1,037 |
| 4415-0015 | 2.5" Left Panel Discharge Hale Manual Valve. Location: [#LOC] | $1,348 |
| 4415-0016 | 2.5" Right Pump Panel Discharge Akron Manual Valve. Location: [#LOC]. | $1,151 |
| 4415-0017 | 2.5" Right Pump Panel Discharge Hale Manual Valve. Location: [#LOC] | $1,462 |
| 4415-0018 | 2.5" left front hose bed discharge Akron manual valve. | $1,499 |

| Item No. | Description | |
|---|---|---|
| 4415-0019 | 2.5" Left Front Hosebed Discharge Hale Manual Valve | $1,751 |
| 4415-0020 | 2.5" right front hose bed discharge Akron manual valve. | $1,499 |
| 4415-0021 | 2.5" Right Front Hosebed Discharge Hale Manual Valve | $1,751 |
| 4415-0022 | 2.5" Left Rear Discharge Akron Manual Valve. Location: [#LOC]. | $1,212 |
| 4415-0023 | 2.5" Left Rear Discharge Hale Manual Valve Location: [#LOC] | $1,462 |
| 4415-0025 | 2.5" Left Rear Discharge Akron Electric Valve | $1,561 |
| 4415-0028 | 2.5" Right Rear Discharge Akron Manual Valve. Location: [#LOC]. | $1,212 |
| 4415-0029 | 2.5" Right Rear Discharge Hale Manual Valve Location: [#LOC] | $1,462 |
| 4415-0030 | 2.5" Right Rear Rearmount Discharge Akron Manual Valve | $1,561 |
| 4415-0033 | 3" Left Pump Panel Top mount Discharge Akron Manual Valve (Waterous pumps noted location to be forward lower port). Location: [#LOC]. | $1,773 |
| 4415-0034 | 3" Right Pump Panel Discharge Akron Manual Valve (Waterous pumps noted location to be forward lower port). Location: [#LOC]. | $1,665 |
| 4415-0035 | 3" Right Pump Panel Discharge Hale Manual Valve Location: [#LOC] | $2,041 |
| 4415-0036 | 3" Left Front Hose Bed Discharge Akron Manual Valve. | $2,174 |
| 4415-0037 | 3" Right Front Hose Bed Discharge Akron Manual Valve. | $2,174 |
| 4415-0038 | 3" Left Rear Discharge Akron Manual Valve. Location: [#LOC]. | $1,871 |
| 4415-0039 | 3" Right Rear Discharge Akron Manual Valve. Location: [#LOC]. | $1,871 |
| 4415-0041 | 3" Deck Gun Discharge Akron manual valve. | $1,699 |
| 4415-0049 | 4" Pump Panel Discharge Hale Electric Valve Location: [#LOC] | $5,868 |
| 4415-0050 | 4" Pump Panel Discharge Akron Electric Valve (Waterous pumps noted location to be forward lower port). [#LOC] | $4,755 |
| 4415-0051 | 4" Waterway Discharge with 3" Akron Manual Valve. | $2,307 |
| 4415-0052 | 4" Waterway Discharge with 4" Akron Electric Valve | $4,756 |
| 4415-0053 | 4" Waterway Discharge with 3" Akron Electric Valve | $3,976 |
| 4415-0054 | 4" Right Pump Panel Discharge with 3" Akron Manual Valve (Waterous pumps noted location to be forward lower port). Location: [#LOC]. | $1,958 |
| 4415-0055 | 4" Left Rear Discharge Akron Electric Valve | $5,038 |
| 4415-0056 | 4" Rear Discharge with Akron Electric Valve. Rear Mount application. Locate to [#LOC] of rear steamer. | $4,755 |
| 4415-0057 | 5" Right Pump Panel Discharge with 3" Akron Manual Valve. Location: [#LOC]. | $2,715 |
| 4415-0058 | 2.5" Crosslay Akron Manual Valve. Location: [#LOC]. | $1,200 |
| 4415-0065 | 1.5" Double Speedlay with Akron Manual Valves. | $1,950 |
| 4415-0066 | 1.5" Triple Speedlay with Akron manual valve. | $3,060 |
| 4415-0067 | 1.5" left front hose bed preconnect Akron manual valve. | $1,037 |
| 4415-0068 | 1.5" right front hose bed preconnect Akron manual valve. | $1,037 |
| 4415-0071 | 1.5" Left Rear Discharge Akron Manual Valve. Location: [#LOC]. | $1,093 |
| 4415-0072 | 1.5" Right Rear Discharge Akron Manual Valve. Location: [#LOC]. | $1,093 |
| 4415-0073 | Triple Speedlay (2) 1.5" and (1) 2.5" with Akron Manual Valve. | $4,366 |
| 4415-0075 | 2.5" Rear Driver's Side Preconnect Akron Manual Valve for Rear Mount | $2,145 |
| 4415-0077 | Discharge Package (3) 2.5" with Akron Manual Valves and (1) 3" with Akron Manual Valve. For use with rear mounted pump. | $7,189 |
| 4415-0078 | 3" Deck Gun Discharge Akron Electricl Valve Body Front for Rear Mount | $7,747 |
| 4415-0079 | 3" Deck Gun Discharge Akron Manual Valve Body Rear for Rear Mount | $4,237 |
| 4415-0085 | 1.5" Crosslay w/2" Akron Electric Valve Location: [#LOC] | $2,899 |
| 4415-0086 | 2.5" Crosslay w/Akron Electric Valve. To be located rearward of 1.5" crosslay(s) if applicable. Location: [#LOC]. | $3,333 |
| 4415-0088 | 1.5" Crosslay w/2" Akron Electric Valve & Navigator 9305 Location: [#LOC] | $5,425 |
| 4415-0089 | 2.5" Crosslay w/Akron Electric Valve & Navigator 9305. To be located rearward of 1.5" crosslay(s) if applicable. Location: [#LOC] | $6,303 |
| 4415-0093 | Double 1.5" Speedlay w/2" Akron Electric Valves | $5,811 |
| 4415-0094 | Triple 1.5" Speedlay w/2" Akron Electric Valves | $8,847 |
| 4415-0095 | Triple (2) 1.5" & (1) 2.5" Speedlay w/(2) 2" & (1) 2.5" Akron Electric Valves | $10,662 |
| 4415-0096 | Double 1.5" Speedlay w/2" Akron Electric Valves & Navigator 9305 | $10,771 |
| 4415-0097 | Triple 1.5" Speedlay w/2" Akron Electric Valves & Navigator 9305 | $16,313 |
| 4415-0098 | Triple (2) 1.5" & (1) 2.5" Speedlays w/(2) 2" & (1) 2.5" Akron Electric Valves & Navigator 9305 | $18,514 |
| 4415-0099 | 3" Deck Gun Discharge Akron Electric Valve | $3,907 |
| 4415-0100 | 3" Deck Gun Discharge Akron Electric Valve & Navigator 9305 | $6,956 |
| 4415-0102 | 1.5" Front Bumper Discharge Akron Electric Valve & Navigator 9305 | $6,054 |
| 4415-0104 | 2.5" Front Bumper Discharge Akron Electric Valve & Navigator 9315 | $7,028 |
| 4415-0106 | 1.5" Left Front Hosebed w/2" Akron Electric Valve | $2,965 |
| 4415-0107 | 2.5" Left Front Hosebed Akron Electric Valve | $3,636 |
| 4415-0108 | 3" Left Front Hosebed Akron Electric Valve | $4,387 |
| 4415-0109 | 1.5" Left Front Hosebed w/2" Akron Electric Valve & Navigator 9305 | $5,491 |
| 4415-0110 | 2.5" Left Front Hosebed Akron Electric Valve & Navigator 9305 | $6,687 |
| 4415-0111 | 3" Left Front Hosebed Akron Electric Valve & Navigator 9305 | $7,433 |

| Item No. | Description | |
|---|---|---|
| 4415-0115 | 1.5" Right Front Hosebed w/2" Akron Electric Valve | $2,965 |
| 4415-0116 | 2.5" Right Front Hosebed Akron Electric Valve | $3,636 |
| 4415-0117 | 3" Right Front Hosebed Akron Electric Valve | $4,387 |
| 4415-0118 | 1.5" Right Front Hosebed w/2" Akron Electric Valve & Navigator 9305 | $5,491 |
| 4415-0119 | 2.5" Right Front Hosebed Akron Electric Valve & Navigator 9305 | $6,687 |
| 4415-0120 | 3" Right Front Hosebed Akron Electric Valve & Navigator 9305 | $7,433 |
| 4415-0124 | 2.5" Left Pump Panel Discharge Akron Electric Valve. Location: [#LOC] | $3,175 |
| 4415-0125 | 2.5" Left Pump Panel Discharge Akron Electric Valve & Navigator 9305. Location: [#LOC] | $6,227 |
| 4415-0127 | 2.5" Right Pump Panel Discharge Akron Electric Valve Location: [#LOC] | $3,175 |
| 4415-0128 | 3" Right Pump Panel Discharge Akron Electric Valve (Waterous pumps noted location to be forward lower port) Location: [#LOC] | $3,878 |
| 4415-0129 | 4" Right Pump Panel Discharge w/3" Akron Electric Valve (Waterous pumps noted location to be forward lower port) Location: [#LOC] | $4,171 |
| 4415-0130 | 5" Right Pump Panel Discharge w/3" Akron Electric Valve Location: [#LOC] | $4,926 |
| 4415-0131 | 2.5" Right Pump Panel Discharge Akron Electric Valve & Navigator 9305 Location: [#LOC] | $6,227 |
| 4415-0132 | 3" Right Pump Panel Discharge Akron Electric Valve & Navigator 9305 (Waterous pumps noted location to be forward lower port) Location: [#LOC] | $6,920 |
| 4415-0133 | 4" Pump Panel Discharge Akron Electric Valve & Navigator 9305 Location: [#LOC] | $8,396 |
| 4415-0134 | 4" Right Pump Panel Discharge w/3" Akron Electric Valve & Navigator 9305 Location: [#LOC] | $7,213 |
| 4415-0135 | 5" Right Pump Panel Discharge w/3" Akron Electric Valve & Navigator 9305 Location: [#LOC] | $7,970 |
| 4415-0140 | 1.5" Left Rear Discharge Akron Electric Valve Location: [#LOC] | $3,023 |
| 4415-0141 | 2.5" Left Rear Discharge Akron Electric Valve Location: [#LOC] | $3,350 |
| 4415-0142 | 3" Left Rear Discharge Akron Electric Valve Location: [#LOC] | $4,083 |
| 4415-0143 | 1.5" Left Rear Discharge Akron Electric Valve & Navigator 9305 Location: [#LOC] | $5,550 |
| 4415-0144 | 2.5" Left Rear Discharge Akron Electric Valve & Navigator 9305 Location: [#LOC] | $6,400 |
| 4415-0145 | 3" Left Rear Discharge Akron Electric Valve & Navigator 9305 Location: [#LOC] | $7,128 |
| 4415-0149 | 1.5" Right Rear Discharge Akron Electric Valve Location: [#LOC] | $3,023 |
| 4415-0150 | 2.5" Right Rear Discharge Akron Electric Valve Location: [#LOC] | $3,350 |
| 4415-0151 | 3" Right Rear Dicharge Akron Electric Valve Location: [#LOC] | $4,083 |
| 4415-0152 | 1.5" Right Rear Discharge Akron Electric Valve & Navigator 9305 Location: [#LOC] | $5,550 |
| 4415-0153 | 2.5" Right Rear Discharge Akron Electric Valve & Navigator 9305 Location: [#LOC] | $6,400 |
| 4415-0154 | 3" Right Rear Discharge Akron Electric Valve & Navigator 9305 Location: [#LOC] | $7,128 |
| 4415-0158 | 3" Left Panel Discharge Top Mount Akron Manual Valve w/30 Degree Droop. (Waterous pumps noted location to be forward lower port.) Location: [#LOC]. | $2,097 |
| 4415-0159 | 3" Left Panel Discharge Top Mount Akron Electric Valve (Waterous pumps noted location to be forward lower port) Location: [#LOC] | $3,985 |
| 4415-0160 | 3" Left Panel Discharge Top Mount Akron Electric Valve w/30 Degree Chrome Droop (Waterous pumps noted location to be forward lower port) Location: [#LOC] | $4,310 |
| 4415-0161 | 2.5" Left Panel Discharge Akron Manual Valve w/30 Degree Chrome Droop. Location: [#LOC]. | $1,302 |
| 4415-0162 | 2.5" Left Panel Discharge Akron Electric Valve w/30 Degree Chrome Droop. Location: [#LOC]. | $3,442 |
| 4415-0163 | 2.5" Left Panel Dishcarge Akron Electric Valve & Navigator 9305 w/30 Degree Droop Location: [#LOC] | $6,492 |
| 4415-0164 | 2.5" Right Panel Discharge Akron Manual Valve w/30 Degree Chrome Droop. Location: [#LOC]. | $1,302 |
| 4415-0165 | 3" Right Panel Discharge Akron Manual Valve w/30 Degree Chrome Droop. (Waterous pumps noted if location is forward of steamer use lower discharge port.) Location: [#LOC]. | $1,989 |
| 4415-0166 | 2.5" Right Panel Discharge Akron Electric Valve w/30 Degree Chrome Droop Location: [#LOC] | $3,442 |
| 4415-0167 | 3" Right Panel Discharge Akron Electric Valve w/30 Degree Chrome Droop (Waterous pumps noted location to be forward lower port) Location: [#LOC] | $4,201 |
| 4415-0168 | 2.5" Right Panel Discharge Akron Electric Valve & Navigator 9305 w/30 Degree Droop Location: [#LOC] | $6,492 |
| 4415-0169 | 3" Right Panel Discharge Akron Electric Valve & Navigator 9305 w/30 Degree Droop (Waterous pumps noted location to be forward lower port) Location: [#LOC] | $7,245 |
| 4415-0172 | 2.5" Auxillary Waterway Discharge Akron Manual Valve. Plumbed from foam manifold and "Y" into w/way pipe downstream from main w/way discharge valve. | $1,166 |
| 4415-0179 | 2.5" Auxiliary Deck Gun Discharge Akron Valve for use with CAFS System.Plumbed from foam manifold and "Y" into Deck Gun pipe downstream from main Deck Gun discharge valve. | $2,017 |
| 4415-0184 | 3" Deck Gun Discharge Hale Manual Valve | $1,907 |
| 4415-0185 | 3" Left Panel Discharge w/Akron Electric Valve & 9305 Navigator for Top Mount Module (Waterous pumps noted location to be forward lower port) Location: [#LOC] | $7,031 |
| 4415-0186 | 3" Left Panel Discharge w/Akron Electric Valve & 9305 Navigator for Top Mount Module (Waterous pumps noted location to be forward lower port) Location: [#LOC] | $7,356 |
| 4415-0187 | 1.5" Crosslay with Hale Manual Valve Location: [#LOC] | $1,916 |
| 4415-0189 | 2.5" Crosslay with Hale Manual Valve Location: [#LOC] | $2,583 |
| 4415-0190 | Double 1.5" Speedlay with Hale Manual Valve | $2,401 |
| 4415-0191 | Triple 1.5" Speedlay with Hale Manual Valve | $3,735 |

| Item No. | Description | |
|---|---|---|
| 4415-0193 | Triple Speedlay (2) 1.5" and (1) 2.5" with Hale Manual Valves | $5,341 |
| 4415-0194 | 2.5" Front bumper discharge Akron manual valve. | $1,836 |
| 4415-0195 | 4" Right Pump Panel Discharge with 3" Hale Manual Valve Location: [#LOC] | $2,337 |
| 4415-0196 | 5" Right Pump Panel Discharge with 3" Hale Manual Valve Location: [#LOC] | $3,096 |
| 4415-0197 | 2.5" Left Panel Discharge Hale Manual Valve with Droop. Location: [#LOC] | $1,613 |
| 4415-0198 | 2.5" Right Pump Panel Discharge Hale Manual Valve with droop. Location: [#LOC] | $1,725 |
| 4415-0199 | 3" Right Pump Panel Discharge Hale Manual Valve with Droop Location: [#LOC] | $2,359 |
| 4415-0200 | 1.5" Left Panel Discharge Akron Valve | $1,037 |
| 4415-0201 | 1.5" Right Panel Discharge Akron Valve. | $1,037 |
| 4415-0204 | 1.5" Crosslay with Hale Electric Valve Location: [#LOC] | $3,453 |
| 4415-0205 | 2.5" Crosslay with Hale Electric Valve Location: [#LOC] | $4,259 |
| 4415-0206 | Double 1.5" Speedlay with Hale Electric Valve | $5,476 |
| 4415-0207 | Triple 1.5" Speedlay with Hale Electric Valve | $8,346 |
| 4415-0208 | Triple Speedlay (2) 1.5" and (1) 2.5" with Hale Electric Valves | $10,090 |
| 4415-0209 | 3" Deck Gun Discharge Hale Electric Valve | $4,207 |
| 4415-0210 | 2.5" Auxiliary Deck Gun Discharge Hale Valve for use with CAFS System | $4,316 |
| 4415-0211 | 2.5" Front Bumper Discharge Hale Manual Valve | $1,892 |
| 4415-0212 | 1.5" Front Bumper Discharge Hale Electric Valve | $3,243 |
| 4415-0213 | 2.5" Front Bumper Discharge Hale Electric Valve | $3,567 |
| 4415-0214 | 1.5" Left Front Hosebed Discharge Hale Manual Valve | $1,185 |
| 4415-0215 | 3" Left Front Hosebed Discharge Hale Manual Valve | $2,384 |
| 4415-0216 | 1.5" Left Front Hosebed Discharge Hale Electric Valve | $2,722 |
| 4415-0217 | 2.5" Left Front Hosebed Discharge Hale Electric Valve | $3,425 |
| 4415-0218 | 3" Left Front Hosebed Discharge Hale Electricl Valve | $4,683 |
| 4415-0219 | 1.5" Right Front Hosebed Discharge Hale Manual Valve | $1,185 |
| 4415-0220 | 3" Right Front Hosebed Discharge Hale Manual Valve | $2,384 |
| 4415-0221 | 1.5" Right Front Hosebed Discharge Hale Electric Valve | $2,722 |
| 4415-0222 | 2.5" Right Front Hosebed Discharge Hale Electric Valve | $3,425 |
| 4415-0223 | 3" Right Front Hosebed Discharge Hale Electric Valve | $4,683 |
| 4415-0224 | 1.5" Left Panel Discharge Hale Valve | $1,142 |
| 4415-0225 | 3" Left Pump Panel Top mount Discharge Hale Manual Valve Location: [#LOC] | $1,982 |
| 4415-0226 | 3" Left Pump Panel Top mount Discharge with 30 deg Droop Hale Manual Valve Location: [#LOC] | $2,298 |
| 4415-0227 | 2.5" Left Panel Discharge Hale Electric Valve. Location: [#LOC] | $3,022 |
| 4415-0228 | 2.5" Left Panel Discharge Hale Electric Valve with Droop. Location: [#LOC] | $3,285 |
| 4415-0229 | 3" Left Pump Panel Top mount Discharge Hale Electric Valve Location: [#LOC] | $4,282 |
| 4415-0230 | 3" Left Pump Panel Top mount Discharge with 30 deg Droop Hale Electric Valve Location: [#LOC] | $4,598 |
| 4415-0231 | 1.5" Right Panel Discharge Hale Valve | $1,142 |
| 4415-0232 | 2.5" Right Pump Panel Discharge Hale Electric Valve. Location: [#LOC] | $3,137 |
| 4415-0233 | 2.5" Right Pump Panel Discharge Hale Electric Valve with droop. Location: [#LOC] | $3,400 |
| 4415-0234 | 3" Right Pump Panel Discharge Hale Electric Valve Location: [#LOC] | $4,342 |
| 4415-0235 | 3" Right Pump Panel Discharge Hale Electric Valve with Droop Location: [#LOC] | $4,660 |
| 4415-0236 | 4" Right Pump Panel Discharge with 3" Hale Electric Valve Location: [#LOC] | $4,636 |
| 4415-0237 | 5" Right Pump Panel Discharge with 3" Hale Electric Valve Location: [#LOC] | $5,394 |
| 4415-0238 | 1.5" Left Rear Discharge Hale Manual Valve Location: [#LOC] | $1,202 |
| 4415-0239 | 3" Left Rear Discharge Hale Manual Valve Location: [#LOC] | $2,079 |
| 4415-0240 | 1.5" Left Rear Discharge Hale Electric Valve Location: [#LOC] | $2,740 |
| 4415-0241 | 2.5" Left Rear Discharge Hale Electric Valve Location: [#LOC] | $3,137 |
| 4415-0242 | 3" Left Rear Discharge Hale Electric Valve Location: [#LOC] | $4,380 |
| 4415-0243 | 1.5" Right Rear Discharge Hale Manual Valve Location: [#LOC] | $1,202 |
| 4415-0244 | 3" Right Rear Discharge Hale Manual Valve Location: [#LOC] | $2,079 |
| 4415-0245 | 1.5" Right Rear Discharge Hale Electric Valve Location: [#LOC] | $2,740 |
| 4415-0246 | 2.5" Right Rear Discharge Hale Electric Valve Location: [#LOC] | $3,137 |
| 4415-0247 | 3" Right Rear Discharge Hale Electric Valve Location: [#LOC] | $4,380 |
| 4415-0248 | 1.5" Crosslay Elkhart Manual Valve Location: [#LOC]. | $1,051 |
| 4415-0249 | 2.5" Crosslay Elkhart Manual Valve. To be located rearward of 1.5" crosslay(s) if applicable. Location: [#LOC] | $1,351 |
| 4415-0250 | 1.5" Crosslay w/2" Elkhart Electric Valve Location: [#LOC] | $2,325 |
| 4415-0251 | 2.5" Crosslay w/Elkhart Electric Valve. To be located rearward of 1.5" crosslay(s) if applicable. Location: [#LOC] | $2,839 |
| 4415-0252 | 1.5" Double Speedlay with Elkhart Manual Valves | $2,112 |
| 4415-0253 | SPDLY TRPL 1.5" ELKHART VLV | $3,302 |
| 4415-0254 | Triple Speedlay (2) 1.5" and (1) 2.5" with Elkhart Manual Valves | $4,980 |
| 4415-0255 | Double 1.5" Speedlay w/2" Elkhart Electric Valves | $4,654 |
| 4415-0256 | Triple 1.5" Speedlay w/2" Elkhart Electric Valves | $7,115 |
| 4415-0257 | Triple (2) 1.5" & (1) 2.5" Speedlay w/(2) 2" & (1) 2.5" Elkhart Electric Valves | $9,009 |
| 4415-0265 | 3" Deck Gun Discharge Elkhart Manual Valve w/RC-10 Controller. | $1,922 |

| Item No. | Description | |
|---|---|---|
| 4415-0266 | 3" Deck Gun Discharge Elkhart Electric Valve | $3,383 |
| 4415-0267 | 2.5" Auxiliary Deck Gun Discharge Elkhart Valve for use with CAFS System | $2,171 |
| 4415-0268 | 1.5" Front Bumper Discharge Elkhart Manual Valve | $1,680 |
| 4415-0269 | 2.5" Front Bumper Discharge Elkhart Manual Valve | $1,991 |
| 4415-0270 | 1.5" Front Bumper Discharge Elkhart Electric Valve | $2,951 |
| 4415-0272 | 1.5" Left Front Hosebed Preconnect Elkhart Manual Valve | $1,117 |
| 4415-0273 | 2.5" Left Front Hosebed Discharge Elkhart Manual Valve | $1,651 |
| 4415-0274 | 3" Left Front Hosebed Discharge Elkhart Manual Valve | $2,400 |
| 4415-0275 | 1.5" Left Front Hosebed w/2" Elkhart Electric Valve | $2,389 |
| 4415-0276 | 2.5" Left Front Hosebed Elkhart Electric Valve | $3,137 |
| 4415-0277 | 3" Left Front Hosebed Elkhart Electric Valve | $3,860 |
| 4415-0278 | 1.5" Right Front Hosebed Preconnect Elkhart Manual Valve | $1,117 |
| 4415-0279 | 2.5" Right Front Hosebed Discharge Elkhart Manual Valve | $1,651 |
| 4415-0280 | 3" Right Front Hosebed Discharge Elkhart Manual Valve | $2,400 |
| 4415-0281 | 1.5" Right Front Hosebed w/2" Elkhart Electric Valve | $2,389 |
| 4415-0282 | 2.5" Right Front Hosebed Elkhart Electric Valve | $3,137 |
| 4415-0283 | 3" Right Front Hosebed Elkhart Electric Valve | $3,860 |
| 4415-0284 | 1.5" Left Panel Discharge Elkhart Valve | $1,117 |
| 4415-0285 | 4" Pump Panel Discharge Elkhart Electric Valve (Waterous pumps noted location to be forward lower port) Location: [#LOC]. | $4,960 |
| 4415-0286 | 5" Pump Panel Discharge with 4" Akron Electric Valve Location: [#LOC] | $5,420 |
| 4415-0287 | 5" Pump Panel Discharge with 4" Hale Electric Valve Location: [#LOC] | $6,492 |
| 4415-0288 | 5" Pump Panel Discharge with 4" Elkhart Electric Valve Location: [#LOC] | $5,626 |
| 4415-0289 | 2.5" Left Pump Panel Discharge Elkhart Manual Valve. Location: [#LOC] | $1,190 |
| 4415-0290 | 2.5" Left Panel Discharge Elkhart Manual Valve w/45 Degree Droop. Location: [#LOC]. | $1,456 |
| 4415-0291 | 3" Left Pump Panel Top mount Discharge Elkhart Manual Valve Location: [#LOC] | $1,998 |
| 4415-0292 | 2.5" Left Pump Panel Discharge Elkhart Electric Valve. Location: [#LOC] | $2,678 |
| 4415-0293 | 2.5" Left Panel Discharge Elkhart Electric Valve w/45 Degree Droop Location: [#LOC] | $2,943 |
| 4415-0294 | 3" Left Panel Discharge Top Mount Elkhart Electric Valve Location: [#LOC] | $3,459 |
| 4415-0295 | 4" Left Pump Panel Discharge with 3" Akron Manual Valve Top Mount Controlled. (Waterous pumps noted location to be forward lower port.) Location: [#LOC]. | $1,958 |
| 4415-0296 | 4" Left Pump Panel Discharge with 3" Hale Manual Valve Top Mount Controlled Location: [#LOC] | $2,336 |
| 4415-0297 | 4" Left Pump Panel Discharge with 3" Elkhart Manual Valve Top Mount Controlled (Waterous pumps noted location to be forward lower port) Location: [#LOC] | $2,181 |
| 4415-0298 | 1.5" Right Panel Discharge Elkhart Valve | $1,117 |
| 4415-0299 | 2.5" Right Pump Panel Discharge Elkhart Manual Valve. Location: [#LOC]. | $1,302 |
| 4415-0300 | 2.5" Right Panel Discharge Elkhart Manual Valve w/45 Degree Droop. Location: [#LOC]. | $1,456 |
| 4415-0301 | 3" Right Pump Panel Discharge Elkhart Manual Valve Location: [#LOC] | $1,889 |
| 4415-0302 | 4" Right Pump Panel Discharge with 3" Elkhart Manual Valve w/RC-10 Control w/lights. Location: [#LOC]. | $2,181 |
| 4415-0303 | 5" Right Pump Panel Discharge with 3" Elkhart Unibody Manual Valve Location: [#LOC] | $2,939 |
| 4415-0304 | 2.5" Right Pump Panel Discharge Elkhart Electric Valve Location: [#LOC] | $2,791 |
| 4415-0305 | 2.5" Right Panel Discharge Elkhart Electric Valve w/45 Degree Droop Location: [#LOC] | $2,943 |
| 4415-0306 | 3" Right Pump Panel Discharge Elkhart Electric Valve Location: [#LOC] | $3,351 |
| 4415-0307 | 4" Right Pump Panel Discharge w/3" Elkhart Electric Valve (Waterous pumps noted location to be forward lower port) Location: [#LOC] | $3,645 |
| 4415-0308 | 5" Right Pump Panel Discharge w/3" Elkhart Electric Valve Location: [#LOC] | $4,400 |
| 4415-0309 | 1.5" Left Rear Discharge Elkhart Manual Valve Location: [#LOC] | $1,174 |
| 4415-0310 | 2.5" Left Rear Discharge Elkhart Manual Valve. Location: [#LOC]. | $1,365 |
| 4415-0311 | 3" Left Rear Discharge Elkhart Manual Valve Location: [#LOC] | $2,095 |
| 4415-0312 | 1.5" Left Rear Discharge Elkhart Electric Valve Location: [#LOC] | $2,447 |
| 4415-0313 | 2.5" Left Rear Discharge Elkhart Electric Valve Location: [#LOC] | $2,850 |
| 4415-0314 | 3" Left Rear Discharge Elkhart Electric Valve Location: [#LOC] | $3,557 |
| 4415-0315 | 1.5" Right Rear Discharge Elkhart Manual Valve Location: [#LOC] | $1,174 |
| 4415-0316 | 2.5" Right Rear Discharge Elkhart Manual Valve. Location: [#LOC]. | $1,365 |
| 4415-0317 | 3" Right Rear Discharge Elkhart Manual Valve Location: [#LOC] | $2,095 |
| 4415-0318 | 1.5" Right Rear Discharge Elkhart Electric Valve Location: [#LOC] | $2,447 |
| 4415-0319 | 2.5" Right Rear Discharge Elkhart Electric Valve Location: [#LOC] | $2,850 |
| 4415-0320 | 3" Right Rear Dicharge Elkhart Electric Valve Location: [#LOC] | $3,557 |
| 4415-0322 | Second Left Front Hosebed Discharge 1.5" w/2" Akron Manual Valve | $1,037 |
| 4415-0323 | Second left front hose bed discharge 2.5" Akron manual valve. | $1,499 |
| 4415-0324 | Second Left Front Hosebed Discharge 2.5" Hale Manual Valve | $1,751 |
| 4415-0325 | Second Left Front Hose Bed Discharge 3" Akron Manual Valve. | $2,174 |
| 4415-0326 | Second Left Front Hosebed 1.5" w/2" Akron Electric Valve | $2,965 |
| 4415-0327 | Second Left Front Hosebed 2.5" Akron Electric Valve | $3,636 |
| 4415-0328 | Second Left Front Hosebed 3" Akron Electric Valve | $4,387 |

| Item No. | Description | |
|---|---|---|
| 4415-0329 | Second Left Front Hosebed 1.5" w/2" Akron Electric Valve & Navigator 9305 | $5,491 |
| 4415-0330 | Second Left Front Hosebed 2.5" Akron Electric Valve & Navigator 9305 | $6,687 |
| 4415-0331 | Second Left Front Hosebed 3" Akron Electric Valve & Navigator 9305 | $7,433 |
| 4415-0335 | Second Left Front Hosebed Discharge 1.5" Hale Manual Valve | $1,185 |
| 4415-0336 | Second Left Front Hosebed Discharge 3" Hale Manual Valve | $2,384 |
| 4415-0337 | Second Left Front Hosebed Discharge 1.5" Hale Electric Valve | $2,722 |
| 4415-0338 | Second Left Front Hosebed Discharge 2.5" Hale Electric Valve | $3,425 |
| 4415-0339 | Second Left Front Hosebed Discharge 3" Hale Electricl Valve | $4,683 |
| 4415-0340 | Second Left Front Hosebed Preconnect 1.5" Elkhart Manual Valve | $1,117 |
| 4415-0341 | Second Left Front Hosebed Discharge 2.5" Elkhart Manual Valve | $1,651 |
| 4415-0342 | Second Left Front Hosebed Discharge 3" Elkhart Manual Valve | $2,400 |
| 4415-0343 | Second Left Front Hosebed 1.5" w/2" Elkhart Electric Valve | $2,389 |
| 4415-0344 | Second Left Front Hosebed 2.5" Elkhart Electric Valve | $3,137 |
| 4415-0345 | Second Left Front Hosebed 3" Elkhart Electric Valve | $3,860 |
| 4415-0346 | Second Right Front Hose Bed Preconnect 1.5" With 2" Akron Manual Valve. | $1,037 |
| 4415-0347 | Second Right Front Hose Bed Discharge 2.5" Akron Manual Valve. | $1,499 |
| 4415-0348 | Second Right Front Hosebed Discharge 2.5" Hale Manual Valve | $1,751 |
| 4415-0349 | Second Right Front Hosebed Discharge 3" Akron Manual Valve | $2,174 |
| 4415-0350 | Second Right Front Hosebed 1.5" w/2" Akron Electric Valve | $2,965 |
| 4415-0351 | Second Right Front Hosebed 2.5" Akron Electric Valve | $3,636 |
| 4415-0352 | Second Right Front Hosebed 3" Akron Electric Valve | $4,387 |
| 4415-0353 | Second Right Front Hosebed 1.5" w/2" Akron Electric Valve & Navigator 9305 | $5,491 |
| 4415-0354 | Second Right Front Hosebed 2.5" Akron Electric Valve & Navigator 9305 | $6,687 |
| 4415-0355 | Second Right Front Hosebed 3" Akron Electric Valve & Navigator 9305 | $7,433 |
| 4415-0359 | Second Right Front Hosebed 1.5" Discharge Hale Manual Valve | $1,185 |
| 4415-0360 | Second Right Front Hosebed Discharge 3" Hale Manual Valve | $2,384 |
| 4415-0361 | Second Right Front Hosebed Discharge 1.5" w/2" Hale Electric Valve | $2,722 |
| 4415-0362 | Second Right Front Hosebed Discharge 2.5" Hale Electric Valve | $3,425 |
| 4415-0363 | Second Right Front Hosebed Discharge 3" Hale Electric Valve | $4,683 |
| 4415-0364 | Second Right Front Hosebed Preconnect 1.5" Elkhart Manual Valve | $1,117 |
| 4415-0365 | Second Right Front Hosebed Discharge 2.5" Elkhart Manual Valve | $1,651 |
| 4415-0366 | Second Right Front Hosebed Discharge 3" Elkhart Unibody Manual Valve and shall terminate with a 3"FNPT X 2.5"MNST adapter. | $2,400 |
| 4415-0367 | Second Right Front Hosebed 1.5" w/2" Elkhart Electric Valve | $2,389 |
| 4415-0368 | Second Right Front Hosebed 2.5" Elkhart Electric Valve | $3,137 |
| 4415-0369 | Second Right Front Hosebed 3" Elkhart Electric Valve | $3,860 |
| 4415-0370 | Second 1.5" Front Bumper Discharge Akron Manual Valve. | $1,598 |
| 4415-0371 | Second 1.5" Front Bumper Discharge Hale Manual Valve | $1,705 |
| 4415-0372 | Second 1.5" Front Bumper Discharge Akron Electric Valve | $3,298 |
| 4415-0373 | Second 2.5" Front Bumper Discharge Akron Electric Valve | $3,458 |
| 4415-0374 | Second 1.5" Front Bumper Discharge Akron Electric Valve & Navigator 9305 | $6,054 |
| 4415-0376 | Second 2.5" Front Bumper Discharge Akron Electric Valve & Navigator 9305 | $7,028 |
| 4415-0378 | Second 2.5" Front Bumper Discharge Akron Manual Valve | $1,836 |
| 4415-0379 | Second 2.5" Front Bumper Discharge Hale Manual Valve | $1,892 |
| 4415-0380 | Second 1.5" Front Bumper Discharge Hale Electric Valve | $3,243 |
| 4415-0381 | Second 2.5" Front Bumper Discharge Hale Electric Valve | $3,567 |
| 4415-0382 | Second 1.5" Front Bumper Discharge Elkhart Manual Valve | $1,680 |
| 4415-0383 | Second 2.5" Front Bumper Discharge Elkhart Manual Valve | $1,991 |
| 4415-0384 | Second 1.5" Front Bumper Discharge Elkhart Electric Valve | $2,951 |
| 4415-0385 | Second 2.5" Front Bumper Discharge Elkhart Electric Valve | $3,478 |
| 4415-0386 | 4" Right Rear Discharge 4" Akron Electric Valve. | $5,289 |
| 4415-0387 | 4" Left Rear Discharge Hale Electric Valve | $6,082 |
| 4415-0388 | 4" Left Rear Discharge Elkhart Electric Valve | $5,240 |
| 4415-0389 | 4" Right Rear Discharge Hale Electric Valve | $6,328 |
| 4415-0390 | 4" Right Rear Discharge Elkhart Electric Valve | $5,490 |
| 4415-0391 | 4" Deck Gun Discharge Akron Electric Valve. | $5,644 |
| 4415-0392 | 4" Deck Gun Discharge Hale Electric Valve | $6,684 |
| 4415-0397 | 4" Officer side discharge. Foward of steamer and includes 30 degree droop 4" Akron full flow valve with 4" driver side hand wheel control. | $3,912 |
| 4415-0399 | 1.5" Crosslay w/2" Akron Valve Handwheel Control Location: [#LOC] | $2,052 |
| 4415-0400 | 1.5" Crosslay w/2" Elkhart Valve Handwheel Control Location: [#LOC] | $2,103 |
| 4415-0401 | 2.5" Crosslay w/Akron Valve Handwheel Control. To be located rearward of 1.5" crosslay(s) if applicable. Location: [#LOC] | $2,254 |
| 4415-0402 | 2.5" Crosslay w/Elkhart Unibody Valve Handwheel Control. To be located rearward of 1.5" crosslay(s) if applicable. Location: [#LOC] | $2,304 |
| 4415-0403 | 3" Deck Gun Discharge Akron Valve Handwheel Control. | $2,753 |

| Item No. | Description | |
|---|---|---|
| 4415-0404 | 3" Deck Gun Discharge Elkhart Valve Handwheel Control | $2,806 |
| 4415-0405 | 1.5" Front Bumper Discharge Akron Valve Handwheel Control | $2,655 |
| 4415-0406 | 1.5" Front Bumper Discharge Elkhart Unibody Valve Handwheel Control | $2,706 |
| 4415-0407 | 2.5" Front Bumper Discharge Akron Valve Handwheel Control | $2,892 |
| 4415-0408 | 2.5" Front Bumper Discharge Elkhart Valve Handwheel Control | $2,944 |
| 4415-0409 | 1.5" Left Front Hosebed Preconnect AkronValve Handwheel Control | $2,092 |
| 4415-0410 | 1.5" Left Front Hosebed Preconnect Elkhart Valve Handwheel Control | $2,145 |
| 4415-0411 | 2.5" Left Front Hosebed Discharge Akron Valve Handwheel Control | $2,554 |
| 4415-0412 | 2.5" Left Front Hosebed Discharge Elkhart Valve Handwheel Control | $2,604 |
| 4415-0413 | 3" Left Front Hosebed Discharge Akron Valve Handwheel Control | $3,231 |
| 4415-0414 | 3" Left Front Hosebed Discharge Elkhart Valve Handwheel Control | $3,281 |
| 4415-0415 | 1.5" Right Front Hosebed Preconnect Akron Valve Handwheel Control | $2,092 |
| 4415-0416 | 1.5" Right Front Hosebed Preconnect Elkhart Valve Handwheel Control | $2,145 |
| 4415-0417 | 2.5" Right Front Hosebed Discharge Akron Valve Handwheel Control | $2,554 |
| 4415-0418 | 2.5" Right Front Hosebed Discharge Elkhart Valve Handwheel Control | $2,604 |
| 4415-0419 | 3" Right Front Hosebed Discharge Akron Valve Handwheel Control | $3,231 |
| 4415-0420 | 3" Right Front Hosebed Discharge Elkhart Valve Handwheel Control | $3,281 |
| 4415-0421 | 4" Pump Panel Discharge Akron Valve Handwheel Control. (Waterous pumps noted location to be forward lower port.) Location: [#LOC]. | $3,977 |
| 4415-0422 | 4" Pump Panel Discharge Akron Valve Handwheel Control. (Waterous pumps noted location to be forward lower port.) Location: [#LOC]. | $3,977 |
| 4415-0423 | 5" Right Pump Panel Discharge with 4" Akron Valve Handwheel Control | $4,644 |
| 4415-0424 | 5" Right Pump Panel Discharge with 4" Elkhart Valve Handwheel Control | $4,721 |
| 4415-0425 | 2.5" Right Pump Panel Discharge Akron Valve Handwheel Control. Location: [#LOC] | $2,207 |
| 4415-0426 | 2.5" Right Pump Panel Discharge Elkhart Valve Handwheel Control. Location: [#LOC] | $2,257 |
| 4415-0427 | 2.5" Right Panel Discharge Akron Valve Handwheel Control w/30 Degree Droop Location: [#LOC] | $2,358 |
| 4415-0428 | 2.5" Right Panel Discharge Elkhart Valve Handwheel Control w/30 Degree Droop Location: [#LOC] | $2,411 |
| 4415-0429 | 3" Right Pump Panel Discharge Akron Valve Handwheel Control (Waterous pumps noted location to be forward lower port). Location: [#LOC]. | $2,721 |
| 4415-0430 | 3" Right Pump Panel Discharge Elkhart Unibody Valve Handwheel Control Location: [#LOC] | $2,772 |
| 4415-0431 | 3" Right Panel Discharge Akron Valve Handwheel Control w/Droop. Location:(Waterous pumps noted location to be forward lower port) [#LOC]. | $3,045 |
| 4415-0432 | 4" Right Panel Discharge w/3" Akron Valve Handwheel Control. Location: [#LOC]. | $3,014 |
| 4415-0433 | 4" Right Panel Dischargew/3" Elkhart Unibody Valve Handwheel Control Location: [#LOC] | $3,065 |
| 4415-0434 | 5" Right Pump Panel Discharge with 3" Akron Valve Handwheel Control Location: [#LOC] | $3,770 |
| 4415-0435 | 5" Right Pump Panel Discharge with 3" Elkhart Valve Handwheel Control Location: [#LOC] | $3,821 |
| 4415-0436 | 1.5" Left Rear Discharge Akron Valve Handwheel Control Location: [#LOC] | $2,149 |
| 4415-0437 | 1.5" Left Rear Discharge Elkhart Valve Handwheel Control Location: [#LOC] | $2,199 |
| 4415-0438 | 2.5" Left Rear Discharge Akron Valve Handwheel Control Location: [#LOC] | $2,268 |
| 4415-0440 | 3" Left Rear Discharge Akron Valve Handwheel Control Location: [#LOC] | $2,928 |
| 4415-0441 | 3" Left Rear Discharge Elkhart Unibody Valve Handwheel Control Location: [#LOC] | $2,978 |
| 4415-0442 | 4" Left Rear Discharge Akron Valve Handwheel Control | $4,262 |
| 4415-0443 | 1.5" Right Rear Discharge Akron Valve Handwheel Control Location: [#LOC] | $2,149 |
| 4415-0444 | 1.5" Right Rear Discharge Elkhart Valve Handwheel Control Location: [#LOC] | $2,199 |
| 4415-0445 | 2.5" Right Rear Discharge Akron Valve Handwheel Control Location: [#LOC] | $2,268 |
| 4415-0446 | 2.5" Right Rear Discharge Elkhart Unibody Valve Handwheel Control Location: [#LOC] | $2,317 |
| 4415-0447 | 3" Right Rear Discharge Akron Valve Handwheel Control Location: [#LOC] | $2,928 |
| 4415-0448 | 3" Right Rear Discharge Elkhart Valve Handwheel Control Location: [#LOC] | $2,978 |
| 4415-0449 | 4" Right Rear Discharge Akron Valve Handwheel Control | $4,511 |
| 4415-0455 | Second 1.5" Front Bumper Discharge Akron Valve Handwheel Control | $2,655 |
| 4415-0456 | Second 1.5" Front Bumper Discharge Elkhart Valve Handwheel Control | $2,706 |
| 4415-0457 | Second 2.5" Front Bumper Discharge Akron Valve Handwheel Control | $2,892 |
| 4415-0459 | Second Left Front Hosebed Discharge 1.5" w/2" Akron Valve Handwheel Control | $2,092 |
| 4415-0460 | Second Left Front Hosebed Discharge 1.5" w/2" Elkhart Valve Handwheel Control | $2,145 |
| 4415-0461 | Second Left Front Hosebed Discharge 2.5" Akron Valve Handwheel Control | $2,554 |
| 4415-0462 | Left Front Hosebed Discharge 2.5" Elkhart Unibody Valve Handwheel Control | $2,604 |
| 4415-0463 | Second Left Front Hosebed Discharge 3" Akron Valve Handwheel Control | $3,231 |
| 4415-0464 | Second Left Front Hosebed Discharge 3" Elkhart Valve Handwheel Control | $3,281 |
| 4415-0465 | Second Right Front Hosebed Preconnect 1.5" Akron Valve Handwheel Control | $2,092 |
| 4415-0466 | Second Right Front Hosebed Preconnect 1.5" Elkhart Valve Handwheel Control | $2,145 |
| 4415-0467 | Second Right Front Hosebed Discharge 2.5" Akron Valve Handwheel Control | $2,554 |
| 4415-0468 | Second Right Front Hosebed Discharge 2.5" Elkhart Valve Handwheel Control | $2,604 |
| 4415-0469 | Second Right Front Hosebed Discharge 3" Akron Valve Handwheel Control | $3,231 |
| 4415-0470 | Second Right Front Hosebed Discharge 3" Elkhart Valve Handwheel Control | $3,281 |
| 4415-0471 | 1.5" Left Discharge Akron Valve in Running Board Hose Tray [#LOC]. | $1,037 |
| 4415-0472 | 1.5" Left Discharge Hale Valve in Runningboard Hose Tray [#LOC]. | $1,142 |

| Item No. | Description | |
|---|---|---|
| 4415-0473 | 1.5" Left Discharge Elkhart Valve in Runningboard Hose Tray [#LOC]. | $1,117 |
| 4415-0474 | 1.5" Right Discharge Akron Valve in Runningboard Hose Tray [#LOC]. | $1,037 |
| 4415-0475 | 1.5" Right Discharge Hale Valve in Runningboard Hose Tray [#LOC]. | $1,142 |
| 4415-0476 | 1.5" Right Discharge Elkhart Valve in Runningboard Hose Tray [#LOC]. | $1,117 |
| 4415-0477 | 4" Left Rear Discharge Elkhart Valve Handwheel Control | $4,340 |
| 4415-0478 | 4" Right Rear Discharge Elkhart Valve Handwheel Control | $4,591 |
| 4415-0484 | 2.5" Quad Speedlay with Akron Manual Valves. | $4,785 |
| 4415-0486 | Third Left Front Hosebed Discharge 2.5" Akron Manual Valve. | $1,499 |
| 4415-0487 | 2.5" Discharge Package Montreal. Includes (8) discharges- (4) each side with droop. | $14,363 |
| 4415-0488 | 4" officer rear discharge with 3" valve. Includes 4" FNPT x 4" MNST chrome adaptor with cap (ship loose). | $3,254 |
| 4415-0491 | 2.5" Left Panel Discharge Elkhart Manual UnibodyValve w/30 Degree Chrome Droop. Location: [#LOC]. | $1,425 |
| 4415-0492 | 2.5" Right Panel Discharge Elkhart Manual UnibodyValve w/30 Degree Chrome Droop. Location: [#LOC]. | $1,452 |
| 4415-0493 | 1.5" Crosslay w/2" Elkhart Unibody Manual Valve. Location: [#LOC]. | $1,051 |
| 4415-0494 | 1.5" Crosslay w/2" Elkhart Unibody Electric Valve UBEC3 to read flow and pressure. Location: [#LOC] | $5,106 |
| 4415-0495 | 2.5" Right Panel Discharge Elkhart Hand Wheel Control UnibodyValve w/30 Degree Chrome Droop Location: [#LOC] | $2,334 |
| 4415-0496 | 3" Deck Gun Discharge Elkhart Unibody Valve Handwheel Control | $2,708 |
| 4415-0497 | 4" Pump Discharge Elkhart Electric UBEC3 Valve to read flow and pressure. Location: [#LOC] | $6,663 |
| 4415-0498 | 1.5" Right Rear Discharge Elkhart Electric UBEC3 Valve to read flow and pressure. Location: [#LOC] | $4,954 |
| 4415-0499 | 2.5" Right Rear Discharge Elkhart Electric UBEC3 Valve to read flow and pressure. Location: [#LOC] | $5,755 |
| 4415-0500 | 1.5" Front Bumper Crosslay Elkhart Electric UBEC3 Valve to read flow and pressure. | $5,252 |
| 4415-0502 | 1.5" Front Bumper Discharge Akron Manual Valve without Blowout | $1,598 |
| 4415-0504 | 2.5" Right Panel Discharge Elkhart Manual UnibodyValve Location: [#LOC] | $1,330 |
| 4415-0505 | 2.5" Left Panel Discharge Elkhart Manual UnibodyValve Location: [#LOC] | $1,301 |
| 4415-0506 | 2.5" Right Panel Discharge Elkhart Hand Wheel Control UnibodyValve Location: [#LOC] | $2,214 |
| 4415-0507 | 4" Officer side discharge. Foward of steamer. Includes 30 degree droop. Hand Wheel Control on operator panel. | $4,669 |
| 4415-0508 | 1.5" preconnect discharge with Akron Electric Valve. For use on rear mounted pumps only. Locate [#LOC]. | $3,298 |
| 4415-0510 | 1.5"/2.5" Double Speedlay with Akron Manual Valves (1) 1.5" speedlay and (1) 2.5 speedlay. | $2,379 |
| 4415-0511 | 1.5" Right Panel Discharge Akron Valve Hand Wheel Control | $2,302 |
| 4415-0512 | 2.5" preconnect discharge with Akron Electric Valve. For use on rear mounted pumps only. Locate [#LOC]. | $4,399 |
| 4415-0514 | 4" Officer side discharge. Foward of steamer and includes 30 degree droop 4" Elkhart Elect Control full flow valve. | $5,138 |
| 4415-0515 | Front jumpline swivel to be recess so WYE valve will clear rise lid and tray. | $170 |
| 4415-0516 | 4" Right Panel Discharge w/ 3" Akron Valve Handwheel Control w/Droop Location: [#LOC] | $3,347 |
| 4415-0517 | 4" Right Pump Panel Discharge with 3" Akron Manual Valve w/Droop. Location: [#LOC]. | $2,283 |
| 4415-0518 | 4" Right Panel Discharge w/ 3" Akron Valve Electric w/Droop (Waterous pumps noted location to be forward lower port) Location: [#LOC] | $4,496 |
| 4415-0519 | 4" Right Pump Panel Discharge w/3" Akron Electric Valve & Navigator 9305 with 30 Degree Droop Location: [#LOC] | $7,539 |
| 4415-0520 | 4" Right Pump Panel Discharge with 3" Hale Manual Valve with 30 Degree Droop Location: [#LOC] | $2,661 |
| 4415-0523 | 5" Right Panel Discharge w/4" Elkhart Electric UBEC3 Valve to read flow and pressure. Location: [#LOC] | $6,957 |
| 4415-0524 | 3" Deck Gun Discharge Elkhart Unibody Manual Valve. | $1,915 |
| 4415-0525 | 1.5" Front Bumper Discharge Elkhart Unibody Manual Valve. | $1,680 |
| 4415-0526 | Triple Speedlay (2) 1.5" and (1) 2.5" with Elkhart Unibody Manual Valves | $4,980 |
| 4415-0527 | 1.5" Crosslay w/2" Elkhart Electric Unibody UBEC1 Valve Location: [#LOC] | $2,899 |
| 4415-0528 | 2.5" Left Pump Panel Discharge Elkhart Unibody Electric Valve. Location: [#LOC] | $3,175 |
| 4415-0529 | 3" Right Pump Panel Discharge Elkhart Unibody Electric Valve Location: [#LOC] | $3,878 |
| 4415-0530 | 4" Pump Panel Discharge Elkhart UBEC1 Electric Valve (Waterous pumps noted location to be forward lower port). Location: [#LOC]. | $4,755 |
| 4415-0531 | 4" Pump Panel Discharge Akron Electric Valve with 30 Degree Droop (Waterous pumps noted location to be forward lower port) Location: [#LOC] | $5,063 |
| 4415-0536 | 5" Right Pump Panel Discharge with 4" Akron Valve Handwheel Control. Location: [#LOC]. | $3,996 |
| 4415-0537 | 2.5" Crosslay Elkhart Unibody Manual Valve. To be located rearward of 1.5" crosslay(s) if applicable. Location: [#LOC] | $1,411 |
| 4415-0538 | 1.5" Double Speedlay with Elkhart Unibody Manual Valves | $2,001 |
| 4415-0540 | Triple Speedlay (2) 1.5" and (1) 2.5" with Elkhart Unibody Manual Valves | $4,472 |
| 4415-0541 | 3" Deck Gun Discharge Elkhart Unibody Manual Valve. | $1,806 |

| Item No. | Description | |
|---|---|---|
| 4415-0544 | 3" Left Pump Panel Discharge Akron Manual Valve (Waterous pumps noted location to be forward lower port) Location: [#LOC] | $1,738 |
| 4415-0545 | 5" Pump Panel Discharge with 4" Elkhart UBEC1 Electric Valve Location: [#LOC] | $5,626 |
| 4415-0547 | 2.5" Front Bumper Discharge Elkhart Unibody Manual Valve | $1,991 |
| 4415-0549 | 1.5" Front Bumper Discharge Elkhart Electric UBEC1 Valve | $3,393 |
| 4415-0550 | 2.5" Double Speedlay with Akron Manual Valves | $2,394 |
| 4415-0551 | 2.5" Right Front Hosebed Discharge Akron Manual Valve. Locate offset 11.5" from officer side hosebed side. | $1,499 |
| 4415-0552 | 1.5" Front Bumper Crosslay Discharge Akron Manual Valve. | $2,244 |
| 4415-0553 | 2.5" Left Front Hosebed Discharge Akron Manual Valve located outlet shall be located 13.625" from inside hosebed wall. | $1,499 |
| 4415-0554 | 1.5" Triple Speedlay with Akron Valve Hand Wheel Control. | $6,727 |
| 4415-0555 | 3" Deck Gun Discharge Akron Manual Valve with no Plumbing from the valve to deck gun channel Dealer to install Extend-A-Gun and Plumbing from the valve to the channel.. | $1,577 |
| 4415-0557 | 2.5" Left Rear Discharge Elkhart Unibody Manual Valve Location: [#LOC]. | $1,365 |
| 4415-0558 | 2.5" Right Rear Discharge Elkhart Unibody Manual Valve Location: [#LOC]. | $1,365 |
| 4415-0561 | 2.5" Left Panel Discharge Akron Electric Valve w/30 Degree Droop Location: [#LOC] | $3,442 |
| 4415-0562 | 3" Right Pump Panel Discharge Akron Electric Valve w/30degree Droop (Waterous pumps noted location to be forward lower port) Location: [#LOC] | $4,056 |
| 4415-0563 | 2.5" Right Panel Discharge Akron Electric Valve w/30 Degree Droop Location: [#LOC] | $3,442 |
| 4415-0564 | 3" Right Pump Panel Discharge Elkhart Electric Valve w/30degree Droop Location: [#LOC] | $4,056 |
| 4415-0566 | 1.5" crosslay w/2" Akron electric valve. Location: [#LOC]. | $2,899 |
| 4415-0567 | 2.5" Crosslay w/Akron Electric Valve. To be located rearward of 1.5" crosslay(s) if applicable. Location: [#LOC]. | $3,333 |
| 4415-0568 | 3" deck gun discharge Akron electric valve. | $3,907 |
| 4415-0569 | 4" deck gun discharge Akron electric valve. | $5,644 |
| 4415-0570 | 1.5" Front Bumper Discharge Akron Electric Valve. | $3,298 |
| 4415-0571 | Second 1.5" Front Bumper Discharge Akron Electric Valve | $3,298 |
| 4415-0572 | 2.5" Front Bumper Discharge Akron Electric Valve | $3,458 |
| 4415-0573 | Second 2.5" Front Bumper Discharge Akron Electric Valve | $3,458 |
| 4415-0574 | 2.5" Left Pump Panel Discharge Akron Electric Valve. Location: [#LOC]. | $3,175 |
| 4415-0575 | 2.5" Left Panel Discharge Akron Electric Valve w/30 Degree Droop. Location: [#LOC]. | $3,175 |
| 4415-0576 | 4" Pump Panel Discharge Akron Electric Valve. (Waterous pumps noted location to be forward lower port.) Location: [#LOC]. | $4,755 |
| 4415-0577 | 5" Pump Panel Discharge with 4" Akron Electric Valve. Location: [#LOC]. | $5,420 |
| 4415-0578 | 1.5" Left Rear Discharge Akron Electric Valve Location: [#LOC] | $3,023 |
| 4415-0579 | 2.5" Left Rear Discharge Akron Electric Valve. Location: [#LOC]. | $3,350 |
| 4415-0580 | 3" Left Rear Discharge Akron Electric Valve. Location: [#LOC]. | $4,083 |
| 4415-0581 | 4" Left Rear Discharge Akron Electric Valve. | $5,038 |
| 4415-0582 | 1.5" Right Rear Discharge Akron Electric Valve Location: [#LOC] | $3,023 |
| 4415-0583 | 2.5" Right Rear Discharge Akron Electric Valve. Location: [#LOC]. | $3,350 |
| 4415-0584 | 3" Right Rear Dicharge Akron Electric Valve Location: [#LOC] | $4,083 |
| 4415-0585 | 4" Right Rear Discharge Akron Electric Valve. | $5,289 |
| 4415-0586 | 2.5" Right Pump Panel Discharge Akron Electric Valve. Location: [#LOC]. | $3,175 |
| 4415-0587 | 3" Right Pump Panel Discharge Akron Electric Valve. Location: [#LOC]. | $3,878 |
| 4415-0588 | 4" Right Pump Panel Discharge w/3" Akron Electric Valve (Waterous pumps noted location to be forward lower port) Location: [#LOC] | $4,171 |
| 4415-0589 | 5" Right Pump Panel Discharge w/3" Akron Electric Valve. Location: [#LOC]. | $4,926 |
| 4415-0590 | 2.5" Right Panel Discharge Akron Electric Valve w/30 Degree Droop. Location: [#LOC]. | $3,442 |
| 4415-0591 | 3" Right Panel Discharge Akron Electric Valve w/30 Degree Droop (Waterous pumps noted location to be forward lower port). Location: [#LOC]. | $4,201 |
| 4415-0592 | 4" Right Panel Discharge w/3" Akron valve electric w/droop (Waterous pumps noted location to be forward lower port). Location: [#LOC]. | $4,496 |
| 4415-0593 | 3" Right Pump Panel Discharge Akron Electric Valve w/30degree Droop (Waterous pumps noted location to be forward lower port) Location: [#LOC] | $4,056 |
| 4415-0594 | 2.5" Right Panel Discharge Akron Electric Valve w/30 Degree Droop Location: [#LOC] | $3,442 |
| 4415-0595 | 1.5" Left Front Hosebed w/2" Akron Electric Valve | $2,965 |
| 4415-0596 | 2.5" Left Front Hose Bed Akron Electric Valve. | $3,636 |
| 4415-0597 | 3" Left Front Hose Bed Akron Electric Valve. | $4,387 |
| 4415-0598 | Second Left Front Hosebed 1.5" w/2" Akron Electric Valve | $2,965 |
| 4415-0599 | Second Left Front Hosebed 2.5" Akron Electric Valve | $3,636 |
| 4415-0600 | Second Left Front Hosebed 3" Akron Electric Valve | $4,387 |
| 4415-0601 | 1.5" Crosslay w/2" Akron Electric Valve Location: [#LOC] | $2,899 |
| 4415-0602 | 1.5" Right Front Hosebed w/2" Akron Electric Valve | $2,965 |
| 4415-0603 | 2.5" Right Front Hose Bed Akron Electric Valve. | $3,636 |

| Item No. | Description | |
|---|---|---|
| 4415-0604 | 3" Right Front Hose Bed Akron Electric Valve. | $4,387 |
| 4415-0605 | Second Right Front Hosebed 1.5" w/2" Akron Electric Valve | $2,965 |
| 4415-0606 | Second Right Front Hosebed 2.5" Akron Electric Valve | $3,636 |
| 4415-0607 | Second Right Front Hosebed 3" Akron Electric Valve | $4,387 |
| 4415-0608 | Double 1.5" Speedlay w/2" Akron Electric Valves. | $5,811 |
| 4415-0609 | Triple 1.5" Speedlay w/2" Akron Electric Valves | $8,847 |
| 4415-0610 | Triple (2) 1.5" & (1) 2.5" Speedlay w/(2) 2" & (1) 2.5" Akron Electric Valves | $10,662 |
| 4415-0611 | Triple (2) 1.5" & (1) 2.5" Speedlay w/(2) 2" & (1) 2.5" Akron Electric Valves | $10,662 |
| 4415-0612 | 4" waterway discharge with 3" Akron electric valve. | $3,976 |
| 4415-0613 | 4" waterway discharge with 4" Akron electric valve. | $4,756 |
| 4415-0614 | 3" Left Panel Discharge Top Mount Akron Electric Valve Location: [#LOC] | $3,985 |
| 4415-0615 | 3" Left Panel Discharge Top Mount Akron Electric Valve w/30 Degree Droop (Waterous pumps noted location to be forward lower port) Location: [#LOC] | $4,310 |
| 4415-0616 | Third Right Front Hosebed Discharge 2.5" Akron Manual Valve. | $1,499 |
| 4415-0617 | 2.5" Left Panel Discharge Akron Manual 3" Valve w/30 Degree Droop. Location: [#LOC]. | $1,665 |
| 4415-0618 | 2.5" Auxillary Deck Gun Discharge Manual Valve. Plumbed from foam manifold and "Y" into Deck Gun pipe downstream from main Deck Gun discharge valve. | $1,166 |
| 4415-0619 | 4" Right Pump Panel Discharge with 3" Akron Manual Valve. The 4" NST threads shall be a integral part of the valve. (Waterous pumps noted location to be forward lower port.) Location: [#LOC]. | $1,958 |
| 4415-0620 | 3" Right Rear Discharge Elkhart Unibody Manual Valve Location: [#LOC] | $2,095 |
| 4415-0621 | 3" Left Front Hosebed Discharge Elkhart Unibody Manual Valve | $2,400 |
| 4415-0622 | 3" Right Front Hosebed Discharge Elkhart Unibody Manual Valve | $2,400 |
| 4415-0623 | 3" Left Rear Discharge Elkhart Unibody Manual Valve Location: [#LOC] | $2,095 |
| 4415-0624 | 4" Rear Discharge w/3" Akron Valve Handwheel Control for Rear Mount. The 4" NST Adapter shall be a integral part of the valve. | $3,576 |
| 4415-0626 | Triple Speedlay (forward to rearward or bottom to top) (2) 1.5" and (1) 2.5" with Akron Manual Valve. Speedlays are side by side and located inside transverse compartment. | $2,193 |
| 4415-0627 | 3" Deck Gun Discharge Elkhart Electric Unibody UBEC3Valve to read flow and pressure. | $5,983 |
| 4415-0629 | 2.5" Right Rear Discharge Elkhart Unibody Manual Valve Location: [#LOC] | $1,365 |
| 4415-0631 | 4" Rear Discharge w/4" Akron Valve Handwheel Control for Rear Mount. The 4" NST 30 degree Adapter shall be a integral part of the valve. | $4,203 |
| 4415-0633 | 1.5" Right Front Hosebed Preconnect Elkhart Unibody Manual Valve | $1,117 |
| 4415-0635 | Second Right Front Hosebed Discharge 2.5" Elkhart Unibody Manual Valve | $1,651 |
| 4415-0636 | 4" Right Pump Panel Discharge with 3" Elkhart Unibody Manual Valve. (Waterous pumps noted location to be forward lower port.) Location: [#LOC]. | $2,181 |
| 4415-0637 | Second Left Front Hosebed Discharge 3" w/ 3" Elkhart Unibody Manual Valve and shall terminate with a 3"FNPT X 2.5"MNST adapter. | $2,400 |
| 4415-0638 | Second Right Front Hosebed Discharge 2.5" w/3" Elkhart Unibody Manual Valve and shall terminate with a 3"FNPT X 2.5"MNST adapter. | $2,400 |
| 4415-0639 | 2.5" Left Rear Rearmount Discharge Akron Manual Valve | $1,561 |
| 4415-0642 | 2.5" rear preconnect with crosslay style swivel. For use with rear mount pump application. Includes Akron manual valve with controller located on pump operator panel. Locate: [#LOC]. | $2,087 |
| 4415-0645 | 1.5" rear preconnect with crosslay style swivel. For use with rear mount pump application. Includes Akron manual valve with controller located on pump operator panel. Locate: [#LOC]. | $1,862 |
| 4415-0646 | 1.5" speedlay preconnect with swivel. For use with rear mount pump application. Includes Akron manual valve with controller located on pump operator panel. Locate [#LOC] | $2,226 |
| 4415-0650 | Triple speedlay with (2) 1.5" in upper area and (1) 2.5" in lower storage area. All with Akron manual valves. | $3,533 |
| 4415-0659 | 2.5" Left Pump Panel Discharge Elkhart Unibody Electric Valve with Droop. Location: [#LOC] | $3,305 |
| 4415-0662 | 3" Deck Gun Discharge Elkhart Electric Unibody Valve | $3,907 |
| 4415-0665 | 1.5" Front Bumper Discharge Akron Electric Valve & Navigator 9315 | $6,054 |
| 4415-0666 | Triple (2) 1.5" & (1) 2.5" Speedlays w/(2) 2" & (1) 2.5" Akron Electric Valves & Navigator 9315 | $18,514 |
| 4415-0667 | 2.5" Left Panel Dishcarge Akron Electric Valve & Navigator 9315 w/30 Degree Droop Location: [#LOC] | $5,841 |
| 4415-0668 | 2.5" Right Panel Discharge Akron Electric Valve & Navigator 9315 w/30 Degree Droop Location: [#LOC] | $5,841 |
| 4415-0669 | 2.5" Left Rear Discharge Akron Electric Valve & Navigator 9315 Location: [#LOC] | $6,400 |
| 4415-0670 | 3" Right Panel Discharge Akron Electric Valve & Navigator 9315 w/30 Degree Droop (Waterous pumps noted location to be forward lower port) Location: [#LOC] | $6,804 |
| 4415-0671 | 1.5" double speedlays with Akron manual valves. Each outlet connection shall terminate externally (no swivels) on the side of the module just below the speedlay. | $1,950 |
| 4415-0672 | 1.5" Triple Speedlay with Akron Manual Valve. Each outlet connection shall terminate externally (no swivels) on the side of the module just below the speedlay. | $3,060 |

| Item No. | Description | |
|---|---|---|
| 4415-0673 | Triple Speedlay (2) 1.5" and (1) 2.5" with Akron Manual Valve. Each outlet connection shall terminate externally (no swivels) on the side of the module just below the speedlay. | $4,366 |
| 4415-0675 | 1.5" Triple Speedlay Elkhart Manual Valves. Each outlet connection shall terminate externally (no swivels) on the side of the module just below the speedlay. | $3,302 |
| 4415-0676 | Triple Speedlay (2) 1.5" and (1) 2.5" with Elkhart Manual Valves. Each outlet connection shall terminate externally (no swivels) on the side of the module just below the speedlay. | $4,980 |
| 4415-0677 | 1.5" Front Bumper Discharge Akron Electric Valve. For use with rear mount pump. Includes air blow-out with control on pump operator panel. | $2,515 |
| 4415-0678 | 1.5" front bumper discharge with Akron manual valve. For use with rear mount pump. Includes air blow-out with control on pump operator panel. | $1,539 |
| 4415-0679 | 1.5" front bumper discharge with Elkhart unibody manual valve. For use with rear mount pump. Includes air blow-out with control on pump operator panel. | $1,469 |
| 4415-0680 | 1.5" front bumper discharge with Elkhart unibody electric valve. For use with rear mount pump. Includes air blow-out with control on pump operator panel. | $2,515 |
| 4415-0681 | 2.5" front bumper discharge with Akron manual valve. For use with rear mount pump. Includes air blow-out with control on pump operator panel. | $1,818 |
| 4415-0682 | 2.5" front bumper discharge with Elkhart unibody manual valve. For use with rear mount pump. Includes air blow-out with control on pump operator panel. | $1,818 |
| 4415-0683 | 2.5" Front Bumper Discharge Akron Electric Valve. For use with rear mount pump. Includes air blow-out with control on pump operator panel. | $2,993 |
| 4415-0684 | 2.5" front bumper discharge with Elkhart unibody electric valve. For use with rear mount pump. | $2,993 |
| 4415-0687 | 2.5" rear panel discharge with Akron manual valve. For use with rear mount pump. Location [#LOC]. | $1,274 |
| 4415-0688 | 2.5" rear panel discharge with Elkhart unibody manual valve. For use with rear mount pump. Location [#LOC]. | $1,274 |
| 4415-0689 | 3" rear panel discharge with Akron manual valve. For use with rear mount pump. Location [#LOC]. | $1,536 |
| 4415-0690 | 3" rear panel discharge with Elkhart unibody manual valve. For use with rear mount pump. Location [#LOC]. | $1,536 |
| 4415-0691 | 3" Rear panel discharge with Elkhart unibody electric valve. For use with rear mount pump. Location [#LOC]. | $3,240 |
| 4415-0692 | 3" rear panel discharge with Akron electric valve. For use with rear mount pump. Location [#LOC]. | $3,240 |
| 4415-0694 | 4" rear panel discharge with 3" Akron manual valve. For use with rear mount pump. Location [#LOC]. | $1,556 |
| 4415-0695 | 4" rear panel discharge with 3" Elkhart unibody electric valve. For use with rear mount pump. Location [#LOC]. | $2,843 |
| 4415-0696 | 4" rear panel discharge with 3" Akron electric valve. For use with rear mount pump. Location [#LOC]. | $2,843 |
| 4415-0697 | 4" rear panel discharge with 4" Akron electric valve. For use with rear mount pump. Location [#LOC]. | $3,829 |
| 4415-0698 | 4" rear panel discharge with 4" Elkhart unibody electric valve. For use with rear mount pump. Location [#LOC]. | $3,829 |
| 4415-0699 | 5" rear panel discharge with 4" Akron electric valve. For use with rear mount pump. Location [#LOC]. | $5,420 |
| 4415-0700 | 5" rear panel discharge with 4" Elkhart unibody electric valve. For use with rear mount pump. Location [#LOC]. | $5,420 |
| 4415-0703 | 1.5" preconnect discharge with Elkhart unibody manual valve. Includes swivel style connection. Location [#LOC]. | $1,177 |
| 4415-0704 | 2.5" preconnect discharge with Elkhart unibody manual valve. Includes swivel style connection. Location [#LOC]. | $1,405 |
| 4415-0705 | 2.5" preconnect discharge with Akron electricl valve. Includes swivel style connection. Location [#LOC]. | $2,678 |
| 4415-0706 | 2.5" preconnect discharge with Elkhart unibody electricl valve. Includes swivel style connection. Location [#LOC]. | $2,678 |
| 4415-0707 | 1.5" preconnect discharge with Akron electric valve. Includes swivel style connection. Location [#LOC]. | $2,607 |
| 4415-0708 | 1.5" preconnect discharge with Elkhart unibody electric valve. Includes swivel style connection. Location [#LOC]. | $3,162 |
| 4415-0709 | 3" Deck gun discharge with Akron manual valve. For use with rear mount pump and for forward body area. Location [#LOC]. | $2,319 |
| 4415-0710 | 3" Deck gun discharge with Akron electric valve. For use with rear mount pump and for forward body area. Location [#LOC]. | $3,587 |
| 4415-0712 | 3" Deck gun discharge with Elkhart unibody electricl valve. For use with rear mount pump and for forward body area. Location [#LOC]. | $3,587 |
| 4415-0713 | 3" Deck gun discharge with Akron manual valve. For use with rear mount pump and for rearward body/pump module area. Location [#LOC]. | $1,387 |

| Item No. | Description | |
|---|---|---|
| 4415-0714 | 3" Deck gun discharge with Akron electric valve. For use with rear mount pump and for rearward body/pump module area. Location [#LOC]. | $2,959 |
| 4415-0718 | 1.5" Single Speedlay with Akron Manual Valves. | $1,057 |
| 4415-0719 | 3" Deck Gun Discharge Akron Electric Valve & Navigator 9315 | $6,956 |
| 4415-0721 | Quad Speedlay (3) 1.5" / (1) 2.5" with Akron Manual Valves. Located inside transverse compartment. | $3,246 |
| 4415-0722 | 3" Deck Gun Discharge Akron Electric Valve with a 9315 valve controller with pressure reading only. [#LOC] | $4,350 |
| 4415-0723 | 4" Discharge Akron Electric Valve & Navigator 9315 (Waterous pumps noted location to be forward lower port). Location: [#LOC]. | $8,396 |
| 4415-0724 | 4" Rear Mount Discharge w/3" Akron 9315 Electric Valve to read Flow and Pressure with 30 degree droop (Waterous pumps noted location to be forward lower port) Location: [#LOC] | $7,213 |
| 4415-0725 | 4" Rear Mount Discharge w/3" Akron 9315 Electric Valve to read Pressure (Waterous pumps noted location to be forward lower port) Location: [#LOC] | $4,116 |
| 4415-0726 | 1.5" Front Bumper Discharge Akron Electric Valve & Navigator 9315 with Pressue Reading only. | $3,693 |
| 4415-0727 | 1.5" Crosslay w/2" Akron Electric Valve & Navigator 9315 to Read Pressure only Location: [#LOC] | $3,437 |
| 4415-0728 | 2.5" Rear Mount Discharge Akron Electric Valve & Navigator 9315 to Read Pressure only. Location: [#LOC] | $3,605 |
| 4415-0731 | 2.5" Left Pump Panel Discharge UBEC3 Electric Valve with 30 degree droop to read flow and pressure. Location: [#LOC] | $5,723 |
| 4415-0732 | 2.5" Right Pump Panel Discharge UBEC3 Electric Valve with 30 degree droop to read flow and pressure. Location: [#LOC] | $5,723 |
| 4415-0733 | 4.5" Right Pump Panel Discharge with 3" Akron Manual Valve w/Droop Location: right side discharge 1 [#LOC] | $2,483 |
| 4415-0739 | 3" Right Pump Panel Discharge Elkhart Electric Valve w/30degree Droop to Terminate with 2.5" MNST w/cap Location: [#LOC] | $4,056 |
| 4415-0740 | 2.5" preconnect discharge with Akron manual valve. With swivel style connection. Location: [#LOC]. | $1,405 |
| 4415-0741 | 1.5" preconnect discharge with Akron manual valve. With swivel style connection. Location: [#LOC]. | $1,177 |
| 4415-0742 | 2.5" rear panel discharge with Akron electric valve. For use with rear mount pump. Location [#LOC]. | $3,047 |
| 4415-0743 | 2.5" rear panel discharge with Elkhart unibody electric valve. For use with rear mount pump. Location [#LOC]. | $3,047 |
| 4415-0747 | 4" Pump Panel Discharge Akron Electric Navigator 9315 Valve (Read Pressure only) Location: [#LOC] | $5,207 |
| 4415-0749 | 4" rear panel discharge with 4" Akron manual valve with handwheel. For use with rear mount pump. Location [#LOC]. | $3,257 |
| 4415-0751 | 2.5" Crosslay Elkhart UBEC3 Electric Valve to read flow and pressure.. To be located rearward of 1.5" crosslay(s) if applicable. Location: [#LOC] | $5,592 |
| 4415-0753 | Second Left Front Hosebed Preconnect 1.5" Elkhart Unibody Manual Valve | $1,117 |
| 4415-0754 | Left Front Hose Bed Discharge 2.5" Elkhart Unibody Manual Valve. | $1,651 |
| 4415-0755 | Right Front Hosebed Discharge 2.5" Elkhart Unibody Manual Valve | $1,651 |
| 4415-0756 | Second 1.5" Right Front Hosebed Preconnect Elkhart Unibody Manual Valve | $1,117 |
| 4415-0757 | 1.5" Front Bumper Discharge Elkhart Electric UBEC3 Valve to read flow and pressure. | $5,499 |
| 4415-0758 | Left Front Hosebed Discharge 2.5" Elkhart Unibody UBEC3 Valve to read flow and pressure. | $5,682 |
| 4415-0759 | Right Front Hosebed Discharge 2.5" Elkhart Unibody UBEC3 Valve to read flow and pressure. | $5,682 |
| 4415-0760 | 2.5" Front Bumper Discharge Akron Manual Valve without Blowout. | $1,836 |
| 4415-0762 | 4" Pump Panel Discharge Akron Electric Valve with 30 Degree Droop. Location: [#LOC]. | $5,063 |
| 4415-0767 | 2.5" Right Panel Discharge Akron Manual 3" Valve w/30 Degree Droop Location: [#LOC] | $1,665 |
| 4415-0769 | Double 1.5" Speedlay w/2" Akron Electric Valves & Navigator 9315 | $10,771 |
| 4415-0771 | 4" Deck Gun Discharge Akron Electric Valve & Navigator 9315 | $7,051 |
| 4415-0772 | 4" Deck Gun Discharge Elkhart Electric Unibody Valve | $5,844 |
| 4415-0773 | 2.5" Right Pump Panel Discharge w/3" Elkhart Electric Unibody Valve and 30degree Droop [#LOC] | $4,056 |
| 4415-0774 | 3" Right Front Hosebed Elkhart Electric Unibody Valve | $3,860 |
| 4415-0775 | 3" Left Front Hosebed Elkhart Electric Unibody Valve | $3,860 |
| 4415-0777 | 2.5" Left Panel Discharge 3" Akron Electric 9315 Navigator Valve w/30 Degree Droop to Read Pressure and Flow Location: [#LOC] | $5,873 |
| 4415-0778 | 2.5" Crosslay w/Akron 3" Electric Valve & Navigator 9315 include 3" plumbing. To be located rearward of 1.5" crosslay(s) if applicable. Location: [#LOC] | $6,522 |
| 4415-0779 | 2.5" Left Rear Discharge with Akron Navigator 9315 3" Electric Valve and 3" Piping Location: [#LOC] | $7,433 |
| 4415-0781 | 3" Right Pump Panel Discharge UBEC3 Electric Valve with 30 degree droop to read flow and pressure. Location: [#LOC] | $6,804 |
| 4415-0782 | 2.5" Left Front Hosebed Include Akron 3" Electric Valve & 9315 NavigatorControler w/3" Plumbing. To terminate at the left front of the hosebed. | $7,433 |

| Item No. | Description | |
|---|---|---|
| 4415-0783 | Double 2.5" Speedlay w/Akron Navigator 9315 3" Electric Valve Controller. Include 3" piping and to terminate with a 2.5" brass swivel. | $13,044 |
| 4415-0784 | 1.5" Rear Panel Discharge manual Akron Valve. Locate [#LOC] | $1,598 |
| 4415-0805 | 5" Left Pump Panel Discharge W/4" Akron Electric Navigator 9315 valve and controller. Include valve position display pressure and flow meter. [#LOC] | $8,477 |
| 4415-0806 | 5" Right Pump Panel Discharge W/4" Akron Electric Navigator 9315 valve and controller. Include valve position display pressure and flow meter. [#LOC] | $8,477 |
| 4415-0807 | Dual Ground Sweep Nozzles 50 GPM. Locate at front (1) left and (1) right sides control at operator panel. | $1,620 |
| 4415-0808 | 2.5" Left Rear Discharge w/3" Akron Manual Valve. Include 3" plumbing to terminate with 2.5" threads.Location: [#LOC] | $1,871 |
| 4415-0811 | Akron 2.5" foam system discharge with swing handle. For use with Williams Advent or Hot Shot foam systems. Locate to [#LOC]. | $1,146 |
| 4415-0812 | Elkhart Unibody 2.5" foam system discharge with swing handle. For use with Williams Advent or Hot Shot foam systems. Locate to [#LOC]. | $1,146 |
| 4415-0830 | 3" Right Pump Panel Discharge Elkhart Unibody Manual Valve. Location: [#LOC] | $1,760 |
| 4415-0831 | 3" Right Pump Panel Discharge Elkhart Electric Unibody Valve with 30 degre droop elbow. Location: [#LOC] | $3,753 |
| 4415-0834 | 4" Deck Gun Discharge Outlet with 6" Electric Elkhart Valve and plumbing. Require 4" Monitor | $6,206 |
| 4415-0835 | 4" Deck Gun Discharge Outlet with 6" Electric Akron Valve and plumbing. Requires 4" Monitor. | $6,206 |
| 4415-0842 | 5" Right Side Discharge 5" Elkhart Electric Valve. Locate: [#LOC] | $5,466 |
| 4415-0847 | Akron 635 Swivel with turning vane Located on Top of Bumper officer's side of center tray for Front Bumper Discharge | $174 |
| 4415-0849 | 5" Pump Panel Discharge 4" Akron Electric Valve & Navigator 9315 (Waterous pumps noted location to be forward lower port) Location: [#LOC] | $7,993 |
| 4415-0852 | 6" Right Side Discharge 6" Elkhart Electric Valve with Unibody controller. Locate: [#LOC] | $6,181 |
| 4415-0853 | 6" Left Side Discharge 6" Elkhart Electric Valve with Unibody controller. Locate: [#LOC] | $6,181 |
| 4415-0854 | 3" Left Rear Discharge Elkhart Electric Unibody Valve Location: [#LOC] | $3,517 |
| 4415-0855 | 3" Right Rear Discharge Elkhart Electric Unibody Valve Location: [#LOC] | $3,517 |
| 4415-0856 | 3" Right Side Discharge Elkhart Electric Unibody Valve. Location: [#LOC] | $3,517 |
| 4415-0858 | Triple speedlay with (1) 1.5" and (1) 2.5" in lower storage area and (1) 1.5" in upper storage area. All with Akron manual valves. | $3,538 |
| 4415-0859 | Triple speedlay with (1) 1.5" and (1) 2.5" in lower storage area and (1) 1.5" in upper storage area. All with Elkhart Unibody manual valves. | $3,650 |
| 4415-0874 | 1.75" Front Bumper Crosslay Discharge with 2" Akron Manual Valve. Include 2" plumbing from pump compartment to back of cab. From back of cab to crosslay swivel will be 2" plumbing. | $2,410 |
| 4415-0877 | 2.5" Crosslay Elkhart UBEC1 Electric Valve. To be located rearward of 1.5" crosslay(s) if applicable. Location: [#LOC] | $2,839 |
| 4415-0878 | 2.5" Right Panel Discharge Elkhart Unibody Electric Valve. Location: [#LOC] | $3,193 |
| 4415-0880 | 2.5" Left Panel Discharge with Elkhart Unibody Manual 3" Valve and 30 Degree Droop Location: [#LOC] | $1,665 |
| 4415-0882 | 2.5" preconnect discharge with Akron 3" manual valve and 3" plumbing reduce to a 2.5" at the swivel. For use on rear mount pump. Includes swivel style connection. Location: driver side under hosebed (outboard). | $1,957 |
| 4415-0889 | 2.5" Front Bumper Discharge Elkhart Electric UBEC3 Valve to read flow and pressure. | $5,716 |
| 4415-0892 | 3" Front Bumper Discharge Akron Manual Valve. Location; 3" front bumper discharge piped through the center of the center front bumper tray and to come out thru the front bumper. Piping to have a cover plate in tray. | $3,782 |
| 4415-0895 | Hose bib discharge 3/4" with valve. Location Officer's side pump panel. | $314 |
| 4415-0899 | 4" Waterway Discharge with 3" Elkhart Unibody Manual Valve | $2,532 |
| 4415-0903 | 1.5" Front Bumper Crosslay Discharge Akron Manual Valve | $2,351 |
| 4415-0904 | 2" front bumper discharge Elkhart Electric valve. Include Elkhart electric valve plumbing and harness from the valve to joystick control located in cab console. Discharge to terminate and capped off just below the center of the bumper for dealer supplied and installed joystick and bumper turret. | $2,463 |
| 4415-0905 | Akron 1.5" foam system discharge with swing handle. For use with Williams Advent or Hot Shot foam systems. Locate to [#LOC]. | $932 |
| 4415-0907 | 1.5" front bumper discharge plumbing from back of cab to front bumper. | $572 |
| 4415-0908 | 2.5" Rear Mount Discharge Akron Electric Valve & Navigator 9315 to Read Pressure only w/30 Degree Droop. Location: [#LOC] | $3,728 |
| 4415-0910 | 2.5" hose bed discharge Akron manual valve [#LOC]. | $1,499 |
| 4415-0911 | Double 1.5" Speedlay w/2" Akron Electric Valves & Navigator 9315 to read Pressure only. | $6,870 |
| 4415-0912 | Second Left Front Hosebed 3" Elkhart Unibody manual Valve | $2,399 |
| 4415-0915 | 6" Waterway Discharge with 6" Akron Electric Valve. | $6,188 |
| 4415-0916 | 4" Deck Gun Discharge Akron Valve Handwheel Control. | $4,669 |

| Item No. | Description | |
|---|---|---|
| 4415-0918 | 1.5" Front Bumper Crosslay Discharge Elkhart Unibody Manual Valve | $2,244 |
| 4415-0919 | Deck gun monitor 3" Gemini manual hand wheel model 34700011 and nozzle 2.5" NH Excel model 51471000. | $3,543 |
| 4415-0920 | Left Front Hosebed Discharge 2.5" Elkhart Unibody UBEC1 Valve. | $3,136 |
| 4415-0921 | Right Front Hosebed Discharge 2.5" Elkhart Unibody UBEC1 Valve. | $3,136 |
| 4415-0923 | 4" Right Pump Panel Discharge with 3" Akron Manual Valve. Include a 4"FNST swivel x 4"MNST 30 degree droop adapter and cap. Location: [#LOC]. | $2,283 |
| 4415-0924 | 2.5" Single Speedlay with Akron manual valve located at lower storage area offset to rear. | $1,339 |
| 4415-0925 | All Discharge/Intake caps and plug to be Kochek brand and Powder coated. Color; White. | $608 |
| 4415-0926 | 1.5"/2.5" Double Speedlay with Akron Manual Valves upper 1.75" speedlay and lower 2.5" speedlay. | $2,379 |
| 4415-0929 | 2.5" Right Front Hosebed Akron Electric Valve & Pro Navigator 9325 controller with pressue read out. | $4,364 |
| 4415-0930 | 2.5" Left Front Hosebed Akron Electric Valve & Pro Navigator 9325 controller with pressue read out. | $4,364 |
| 4415-0931 | 2.5" Front Bumper Discharge Akron Electric Valve & Navigator Pro Controller 9325 with pressure read out. | $4,190 |
| 4415-0932 | Double 1.5" Speedlay w/2" Akron Electric Valves & Navigator Pro 9325 with Pressure read out. | $7,305 |
| 4415-0933 | 2.5" Right Panel Discharge Akron Electric Valve & Navigator Pro 9325 controller w/30 Degree Droop to Read Pressure. Location: [#LOC] | $4,175 |
| 4415-0934 | 2.5" Left Panel Discharge Akron Electric Valve & Navigator Pro 9325 controller w/30 Degree Droop to Read Pressure. Location: [#LOC] | $3,914 |
| 4415-0935 | 4" Right Pump Panel Discharge w/3" Akron Electric Valve & Navigator Pro 9325 with Pressure read out. (Waterous pumps noted location to be forward lower port) Location: [#LOC] | $5,202 |
| 4415-0936 | 4" Pump Panel Discharge Akron Electric Valve & Navigator 9325 to read flow and pressure w/30 degree droop. (Waterous pumps noted location to be forward lower port). Location: [#LOC]. | $6,010 |
| 4415-0937 | 3" Deck Gun Discharge Akron Electric Valve & Navigator read flow and pressure with 9325 controller. | $5,360 |
| 4415-0938 | 2.5" Left Pump Panel Discharge Akron Manual Valve. The discharge shall extend out beyond the pump panel w/Chrome plated finish. Location: [#LOC]. | $1,169 |
| 4415-0939 | 2.5" Right Pump Panel Discharge Akron Manual Valve. The discharge shall extend out beyond the pump panel w/Chrome plated finish. Location: [#LOC]. | $1,169 |
| 4415-0940 | 3" Right Pump Panel Discharge Akron Manual Valve. The discharge shall extend out beyond the pump panel w/Chrome plated finish. (Waterous pumps noted location to be forward lower port). Location: [#LOC]. | $1,797 |
| 4415-0941 | 4" Right Pump Panel Storz Discharge with 3" Akron Manual Valve. Include 3" FNST X 4" Storz 30 degree elbow adapter with cap. (Waterous pumps noted location to be forward lower port). Location: [#LOC]. | $2,494 |
| 4415-0942 | Left Rear Discharge 2.5" Elkhart Unibody electric valve with UICS-2 CAFS Controller. | $4,447 |
| 4415-0943 | 3" Deck Gun Discharge Akron Electric Valve & Navigator with 9323 controller. | $3,928 |
| 4415-0944 | 3" Right Panel Discharge Akron Electric Valve & Navigator 9325 w/30 Degree Droop (Waterous pumps noted location to be forward lower port) Location: [#LOC] | $5,324 |
| 4415-0945 | 1.5" Front Bumper Discharge Elkhart Electric Valve with UICS-2 CAFS Controller. | $4,703 |
| 4415-0946 | 1.5" Crosslay w/2" Elkhart Electric Unibody Valve with UICS-2 CAFS Controller. Location: [#LOC]. | $4,210 |
| 4415-0947 | 2.5" Right Panel Discharge Elkhart Unibody Electric Valve w/Droop and include UICS-2 CAFS Controller. Location: [#LOC]. | $4,614 |
| 4415-0948 | Preconnect extension (Each). The front hosebed preconnect to be extended to the rear of the hosebed area. Includes smooth plate cover. Location: [#LOC]. | $481 |
| 4415-0952 | 4" Deck Gun Discharge Outlet with 6" Electric Akron Valve and plumbing. Require 4" Monitor. Locate right rear. | $7,261 |
| 4415-0954 | 1.5" Front Bumper Discharge Akron Electric Valve & Navigator 9325 controller to read flow and pressure.. | $5,813 |
| 4415-0955 | 3" Deck Gun Discharge Akron Electric Valve with 9325 Navigator Controller to read flow and pressure. | $5,958 |
| 4415-0956 | 4" Right Rear Discharge Akron Electric Valve with 9325 Navigator controller to read flow and pressure. [#LOC]. | $7,880 |
| 4415-0959 | 3" Deck Gun Discharge Akron Electric Valve with 9325 Navigator Controller(to read pressure only). | $4,065 |
| 4415-0963 | One (1) pre-connect 1.5" adaptation to Storz. The pre-connect extension hose shall include an adapter to Storz and the pre-connect nozzle (sold separately in loose equipment) shall be supplied with a Storz adapter. | $197 |
| 4415-0964 | Triple speedlay with (2) 1.5" in lower storage area and (1) 2.5" in upper storage area. All with Akron manual valves. | $3,538 |
| 4415-0965 | Left Front Hosebed Discharge 3" Akron Manual Valve and shall terminate with a 3"FNPT X 2.5"MNST adapter. | $2,190 |

| Item No. | Description | |
|---|---|---|
| 4415-0966 | Right Front Hosebed Discharge 3" Akron Manual Valve and shall terminate with a 3"FNPT X 2.5"MNST adapter. | $2,190 |
| 4415-0967 | 1.5" Crosslay w/2.5" Akron Manual Valve and plumbing. Include 2.5" FNST X 1.5" MNST adapter. Location: [#LOC]. | $1,213 |
| 4415-0969 | 2.5" left front hose bed discharge Akron manual valve. Locate discharge(s) approximately 26" up from hosebed floor. | $1,797 |
| 4415-0970 | 5" Right Pump Panel Discharge with 3" Akron Manual Valve w/Droop. Include a 3"FNST swivel x 5"Storz adapter and a 5"Storz x 4" Storz with cap. Location: [#LOC]. | $2,609 |
| 4415-0972 | 4" Right Pump Panel Storz Discharge with 4" Akron Electric Valve. Include 4" FNST X 4" Storz 30 degree elbow adapter with cap. (Waterous pumps noted location to be forward lower port). Location: [#LOC]. | $4,932 |
| 4415-0973 | 5" Right Pump Panel Storz Discharge with 3" Akron Manual Valve. Include 3" FNST X 5" Storz 30 degree elbow adapter with cap. (Waterous pumps noted location to be forward lower port). Location: [#LOC]. | $2,609 |
| 4415-0975 | 2.5" Front Bumper Crosslay Discharge Akron Electric Valve. | $3,458 |
| 4415-0976 | 3" Auxillary CAFS Deck Gun Discharge Electric Unibody Valve. Plumbed from foam manifold and "Y" into Deck Gun pipe downstream from main Deck Gun discharge valve. | $3,907 |
| 4415-0977 | 2.5" Front Bumper Crosslay Discharge Akron Manual Valve. | $2,567 |
| 4415-0986 | 4" Right Pump Panel Discharge w/4" Akron Electric Valve with 9323 controller. (Waterous pumps noted location to be forward lower port) Location: [#LOC] | $4,856 |
| 4415-0987 | 3" Right Front Hosebed Elkhart Electric Unibody Valve. Termnate with a 3"FNPT X 2.5" MNST. | $3,860 |
| 4415-0988 | 3" Left Front Hosebed Elkhart Electric Unibody Valve. Terminate with a 3"FNPT X 2.5" MNST. | $3,860 |
| 4415-0989 | Left Front Hosebed Discharge 3" w/ 3" Elkhart Unibody Manual Valve and shall terminate with a 3"FNPT X 2.5"MNST adapter. | $2,400 |
| 4415-0991 | 4" Pump Panel Discharge Akron Electric Valve & Navigator 9325 to read flow and pressure. (Waterous pumps noted location to be forward lower port). Location: [#LOC]. | $5,804 |
| 4415-0992 | 4" Pump Panel Discharge Akron Electric Valve & Navigator 9325 (Waterous pumps noted location to be forward lower port). Location:Left Side Discharge 1. | $8,412 |
| 4415-0993 | 3" Left Rear Discharge Akron Electric Valve with 9323 controller. Location: [#LOC]. | $4,083 |
| 4415-0994 | 4" waterway discharge with 4" Akron electric valve with 9323 controller. | $4,756 |
| 4415-0996 | 1.5" Front Bumper Discharge Akron Electric Valve with 9323 controller. | $3,298 |
| 4415-0999 | 4" Right Pump Panel Discharge w/3" Akron Electric Valve and 9323 controller. (Waterous pumps noted location to be forward lower port) Location: [#LOC] | $4,171 |
| 4415-1000 | Double 1.5" Speedlay w/2" Elkhart Electric Unibody Valve with UICS-2 CAFS Controllers. | $7,274 |
| 4415-1001 | 4" Right Panel Discharge w/30 Degree Droop. Include 4" Akron Electric Valve w/9323 Controller. (Waterous pumps noted location to be forward lower port) Location: [#LOC] | $5,071 |
| 4415-1003 | 1.5" Front Bumper Crosslay Discharge Elkhart Unibody Valve with hand wheel control. | $3,032 |
| 4415-1004 | 1.5" Double Speedlay with Elkhart Unibody Valves with hand wheel controls. | $4,463 |
| 4415-1005 | 2.5" Left Panel Discharge Elkhart Hand Wheel Control UnibodyValve w/30 Degree Droop Location: [#LOC] | $2,333 |
| 4415-1010 | 3" Right Panel Discharge Akron Electric Valve and 9323 Controller w/30 Degree Droop. (Waterous pumps noted location to be forward lower port). Location: [#LOC]. | $4,095 |
| 4415-1011 | 3" Right Pump Panel Discharge Akron Electric Valve. Location: [#LOC]. | $3,877 |
| 4415-1012 | 3" Right Front Hosebed Akron Electric Valve with 9323 controller. | $4,386 |
| 4415-1015 | 3" Right Pump Panel Discharge Akron Electric Valve with 9323 controller. Location: [#LOC]. | $3,877 |
| 4415-1016 | 4" waterway discharge with 3" Akron electric valve and 9323 controller. | $3,975 |
| 4415-1017 | 2.5" Front Bumper Discharge Akron Electric Valve with 9323 controller. | $3,458 |
| 4415-1018 | 2.5" Left Front Hose Bed Akron Electric Valve with 9323 controller. | $3,636 |
| 4415-1019 | 2.5" Right Front Hose Bed Akron Electric Valve with 9323 controller. | $3,636 |
| 4415-1020 | Double 1.5" Speedlay w/2" Akron Electric Valves with 9323 controllers. | $5,811 |
| 4415-1023 | 4" Deck Gun Discharge Outlet with 6" Electric Akron Valve and plumbing. Requires 4" Monitor. | $6,206 |
| 4415-1024 | 4" Right Pump Panel Discharge w/3" Akron Electric Valve and 9323 controller include 30 degree droop. (Waterous pumps noted location to be forward lower port) Location: [#LOC] | $4,495 |
| 4415-1025 | 5" Right Pump Panel Discharge w/3" Akron Electric Valve. Location: [#LOC]. | $4,926 |
| 4415-1026 | 5" Pump Panel Discharge with 4" Akron Electric Valve with 9323 controller. Location: [#LOC]. | $5,420 |
| 4415-1027 | 2.5" Front Bumper Discharge Akron Manual Valve and chrome adapter. Location: Through the bumper on Officer side front bumper. | $1,932 |
| 4415-1031 | 4" Deck Gun Discharge 6" Electric Akron Valve with 9323 controller and plumbing. Requires 4" Monitor. | $6,206 |
| 4415-1032 | 3" Left Panel Discharge Top Mount Akron Electric Valve with 9323 controller. Location: [#LOC] | $3,985 |
| 4415-1033 | 3" Left Panel Discharge Top Mount Akron Electric Valve w/9323 controller and 30 Degree Droop (Waterous pumps noted location to be forward lower port) Location: [#LOC] | $4,310 |
| 4415-1034 | Triple Speedlay (1) 2.5" and (2) 1.5" with Akron Manual Valve. 2.5" in top location in bed number 1. | $4,198 |
| 4415-1035 | 1.5" Rear Driver Side Preconnect Akron gear operator valve hand wheel control for Rear Mount. | $2,092 |

| Item No. | Description | |
|---|---|---|
| 4415-1036 | 2.5" Right Pump Panel Discharge Akron Manual Valve to be used with Wetside - under tank design only. Location: [#LOC]. | $2,302 |
| 4415-1038 | 2.5" Right Pump Panel Discharge Akron Electric Valve to be used on Wetside with under tank design only. Location: [#LOC]. | $4,361 |
| 4415-1039 | Double Speedlay (2) 1.5" and Crosslay (1) 2.5" with Akron Manual Valve. | $4,366 |
| 4415-1040 | 1.5" Crosslay w/2.5" Elkart Unibody Manual Valve and plumbing Location: [#LOC] | $1,213 |
| 4415-1041 | 4" Pump Panel Discharge w/3" Akron Electric Valve & Navigator 9325 to read flow and pressure. (Waterous pumps noted location to be forward lower port). Location: [#LOC]. | $5,427 |
| 4415-1042 | 2.5" Single Speedlay with Akron manual valve outlet to terminate below speedlay tray. | $1,221 |
| 4415-1043 | 3" Deck Gun Discharge Elkhart Electric Unibody valve UBEC2 to pressure. | $4,622 |
| 4415-1044 | 3" Right Pump Panel Discharge UBEC2 Electric Valve with 30 degree droop to read pressure. Location: [#LOC] | $4,529 |
| 4415-1045 | Preconnect extension (Each). The front hosebed preconnect to be extended to the rear of the hosebed area. Includes smooth plate cover. Location: second officer side hose bed preconnect is to treminate approx 10" from back edge of hosebed. | $415 |
| 4415-1048 | 3" Rear panel discharge with Akron electric valve and 9323 controller. For use with rear mount pump. Location [#LOC]. | $3,240 |
| 4415-1052 | 1.5" Preconnect Discharge Akron Electric Valve with 9325 controller with pressure reading only. Locate (1) L1 and (1) R1. | $3,708 |
| 4415-1054 | 2.5" Front Bumper Discharge Akron Manual Valve. Locate 2.5" discharge under front bumper on officer side center under officer side. | $1,836 |
| 4415-1055 | 2.5" Crosslay w/2.5" Elkhart Electric Unibody Valve with UICS-2 CAFS Controller with pressure reading. Location: [#LOC]. | $4,426 |
| 4415-1056 | 1.5" crosslay with Akron manual valve and no swivel. For use with discharges that locate below the hose beds. Location: [#LOC]. | $996 |
| 4415-1057 | 4" Left Rear Discharge 4" Elkhart Electric Unibody Valve. | $4,572 |
| 4415-1060 | 2.5" Front Bumper Discharge Elkhart Electric Valve with UICS-2 CAFS Controller with pressure reading. | $4,808 |
| 4415-1062 | 2.5" rear panel discharge with Akron manual valve with droop. For use with rear mount pump. Location rear pump panel. Location [#LOC]. | $1,472 |
| 4415-1063 | 2.5" Right Pump Panel Discharge Akron Manual Valve w/droop to be used with Wetside - under tank design only. Location: [#LOC]. | $2,583 |
| 4415-1068 | 1.5" Crosslay w/2" Akron Electric Valves with a Navigator 9325 controller. Include presure sensor for pressure read out only. Location: [#LOC]. | $3,653 |
| 4415-1072 | 4" Pump Panel Discharge Akron Electric with a Navigator 9325 controller. Include presure sensor for pressure read out only. (Waterous pumps noted location to be forward lower port). Location: [#LOC]. | $5,580 |
| 4415-1076 | 2.5" Right Pump Panel Discharge Akron Electric Valve to be used on Wetside with under tank design only. Location: [#LOC]. | $4,361 |
| 4415-1078 | 2.5" Right Pump Panel Discharge Waterous Manual Hand Wheel Valve. Locate discharge 2. | $3,349 |
| 4415-1079 | 2.5" Left Pump Panel Discharge Waterous Manual Hand Wheel Valve. Locate discharge 1 and 2. | $3,251 |
| 4415-1080 | 2.5" Left Front Hosebed Discharge Waterous Manual Hand Wheel Valve. Location: left front hosebed. | $3,501 |
| 4415-1081 | 2.5" Right Rear Discharge Waterous Manual Hand Wheel Valve. Location: right rear | $3,501 |
| 4415-1082 | 1.5" Crosslay w/2.5" Waterous Valve Handwheel Control. | $3,356 |
| 4415-1084 | 1.5" front bumper discharge Akron manual valve with chrome adapter through bumper. Location: Driver Side. | $1,697 |
| 4415-1085 | 4.5" Right Pump Panel Discharge with 3" Akron Manual Valve Location: [#LOC] | $2,291 |
| 4415-1086 | 4" Front Discharge w/4" Elect 9323 Akron Valve and Plumbed Thruogh Front Bumper. | $6,809 |
| 4415-1087 | 4" Left Pump Panel Discharge w/4" Akron Electric Valve with 9323 controller. (Waterous pumps noted location to be forward lower port) Location: [#LOC] | $4,856 |
| 4415-1089 | 2.5" Single Speedlay with Akron manual valve. | $1,339 |
| 4415-1090 | 4" Discharge with 4" Akron Electric valve. The discharge plumbing will be wye into the 5" rear intake plumbing. Where the rear intake can be utilized as a Intake or Discharge. | $4,633 |
| 4415-1091 | 2.5" Deck Gun Discharge Akron manual valve. | $1,668 |
| 4415-1093 | 2.5" Front Bumper Discharge Akron Manual Valve and chrome adapter. Location: Through the bumper inboard of frame rails. | $1,932 |
| 4415-1094 | 3" Right Rear Discharge UBEC3 Electric Valve to read flow and pressure. Location: Right rear. | $6,804 |
| 4415-1095 | Triple Speedlay (2) 1.5" and (1) 2.5" with Akron valves hand wheel control. | $7,255 |
| 4415-1096 | 2.5" Crosslay Akron Manual Valve. For use with discharges that locate below the hose beds. Location: [#LOC]. | $1,200 |
| 4415-1099 | 4" Left Pump Panel Discharge w/4" Akron Electric Valve with 9323 controller. (Waterous pumps noted location to be forward lower port). [#LOC]. | $4,856 |
| 4415-1100 | 1.5" Crosslay w/2" Akron Electric Valve with 9325 controller to Read Flow and Pressure. Location: [#LOC] | $3,803 |

| Item No. | Description | |
|---|---|---|
| 4415-1101 | 2.5" Front Bumper Discharge Akron Electric Valve with 9325 controllerto Read Flow and Pressure. | $6,068 |
| 4415-1102 | 2.5" Right Panel Discharge Akron Electric Valve & Navigator Pro 9325 controller w/30 Degree Droop to Read Flow and Pressure. Location: [#LOC] | $4,968 |
| 4415-1103 | 2.5" Left Panel Discharge Akron Electric Valve & Navigator Pro 9325 controller w/30 Degree Droop to Read Flow and Pressure. Location: [#LOC] | $4,968 |
| 4415-1104 | 3" Front Bumper Discharge Akron Manual Valve. Location; Officer side with a fix 90 degree elbow on top of bumper.. | $3,639 |
| 4415-1106 | 1.5" Double Speedlay with Akron Valves with hand wheel controls. | $4,463 |
| 4415-1107 | 3" Right Rear Discharge UBEC3 Electric Valve to read flow and pressure. To terminate 2.5" NST. Location: [#LOC]. | $6,804 |
| 4415-1108 | 2.5" Single Speedlay with Akron manual valve located at lower storage area offset to front. | $1,339 |
| 4415-1110 | 5" Right Pump Panel Discharge with 3" Akron Manual Valve. Include a 4"FNST swivel x 5" Storz 30 degree droop adapter and cap. Location: [#LOC]. | $2,476 |
| 4415-1112 | 3.5" Right Panel Discharge with 3" Akron Electric Valve with 9323 controller. Location: Right side pump panel. | $4,025 |
| 4417-0000 | Ground Sweep Nozzle | $1,525 |
| 4417-0001 | Dual Ground Sweep Nozzles 50 GPM | $1,620 |
| 4417-0019 | Fire Shop Bezel Chrome - Side Discharge/Intake | $98 |
| 4417-0020 | Deck Gun Remote TFT 18" Extend-A-Gun electric 3" plumbing. | $4,092 |
| 4417-0021 | Deck Gun Remote Ext-a-Gun 4" | $4,666 |
| 4417-0026 | Automatic drain valve. For: [#LOC]. | $83 |
| 4417-0030 | Monitor Akron 3578 Electric 2000. | $10,112 |
| 4417-0031 | Monitor Akron 3570 Manual 2000 | $3,708 |
| 4417-0032 | Monitor Scorpion wireless RF radio 2000 GPM | $11,348 |
| 4417-0034 | Deck gun TFT 18" Extend-A-Gun 3" manual operation. | $2,041 |
| 4417-0038 | Elkhart Model 8294-06 Monitor with SM-200E Nozzle. Wireless Remote control | $14,423 |
| 4417-0039 | Akron DeckMaster 3440 electric 1250 GPM monitor w/stow. | $11,781 |
| 4417-0040 | Akron 5177 Akromatic 2.5" master stream nozzle for an Akron 3440 DeckMaster monitor. | $1,799 |
| 4417-0041 | Akron 1577 SaberMaster 2.5" Nozzle for an Akron 3440 DeckMaster monitor. | $3,440 |
| 4417-0042 | An Akron tether remote control kit with a 30`cable shall be provided for an Akron monitor. Plug for the remote control to be located: [#LOC]. | $1,142 |
| 4417-0043 | Task Force Hurricane RC electric 1250 GPM monitor. | $13,263 |
| 4417-0044 | Task Force M-ERP-NJ 2.5" master stream electric nozzle for a Hurricane RC monitor. | $1,991 |
| 4417-0045 | Elkhart Stinger 8297-25 Manual 800gpm Monitor w/portable base and adapter to mount to deck gun discharge or extend-a-gun | $3,288 |
| 4417-0046 | Elkhart 8500 Vulcan RF monitor with panel mounted and hand held remote controls w/adapter to mount to deck gun discharge or extender. | $6,556 |
| 4417-0047 | Elkhart SM-1250E Select-O-Matic 2.5" electric nozzle. | $2,489 |
| 4417-0048 | Elkhart 8598 Electrically Actuated Extender. | $2,978 |
| 4417-0052 | Extend Specified Hosebed Preconnect up to top of hosebed. Top of preconnect to be below top of hosebed. Location: [#LOC] | $417 |
| 4417-0054 | Preconnect extension (Each). The front hosebed preconnect to be extended to the rear of the hosebed area. Includes smooth plate cover. Location: [#LOC] | $415 |
| 4417-0055 | Superior style cable controls for top mount. | $204 |
| 4417-0057 | Ferrell Compression Fittings for all Discharge and Intake Bleeder Lines | $630 |
| 4417-0059 | Extend Specified Hosebed Preconnect up to mid-point of hosebed. Center of preconnect to be approximately center of hosebed height. Location: [#LOC] | $314 |
| 4417-0062 | Class 1 Cable Style Controls for Top Mount Discharges and Intakes. | $136 |
| 4417-0063 | Class 1 air operated drains (upgrade) for all discharges and intakes. Includes switch on pump panel for each valve. | $128 |
| 4417-0067 | Monitor 4" TFT Monsoon Manual with TFT Master Stream 2000 gpm manual Nozzle. | $6,613 |
| 4417-0068 | TFT Tether Kit with 30' Cable for an TFT Monitor Location: [#LOC] | $795 |
| 4417-0073 | Deck Gun TFT 12" Extend-A-Gun 3". | $2,041 |
| 4417-0075 | Monitor 4" TFT Monsoon Electric with TFT Master Stream 2000 gpm electric Nozzle. Include panel mount and hand held Remote. | $14,935 |
| 4417-0079 | 9304 Akron Navitgator electric valve control. Location: All electric discharge valves IPOS. | $614 |
| 4417-0080 | All 1.5" Threads to be IPT threads | $72 |
| 4417-0081 | Vented caps and plugs for all discharges/intakes. | $598 |
| 4417-0082 | Deck Gun Remote 12" Extend-A-Gun 3" Plumbing. | $4,092 |
| 4417-0083 | Elkhart 8297F Stinger RF Monitor with Panel Mounted and Hand-Held Remote Controls w/adapter to mount to deck gun discharge or extender | $9,330 |
| 4417-0086 | Task Force Typhoon RC Electric Monitor with 1500gpm nozzle. Include Radio Remote Control | $13,980 |
| 4417-0088 | Bleeder drain valve plumbed to: [#LOC]. | $119 |
| 4417-0090 | Additional control for deck gun electric valve locate adjacent to the discharge outlet. | $1,772 |

| Item No. | Description | |
|---|---|---|
| 4417-0092 | Task Force Typhoon RC Electric Monitor without nozzle. Include Radio Remote Control (Require Nozzle) | $11,220 |
| 4417-0097 | Innovative Controls Push/Pull Valve Control Handles IPOS. | $52 |
| 4417-0099 | Akron Wireless Deck Gun Remote Monitor Controller. | $1,635 |
| 4417-0100 | Akron 3600 Wireless Remote Control. | $1,755 |
| 4417-0102 | Akron DeckMaster 3440 Electric 1250gpm Monitor w/Stow. With 30' Tether controller located in pump panel operator compartment. | $12,395 |
| 4417-0119 | Task Force Hurricane RC Electric Monitor with a Master Stream 1250 GPM nozzle. Includes wireless Radio Remote Control. | $12,415 |
| 4417-0124 | Akron 3406 Electric Riser. | $3,580 |
| 4417-0125 | Deck gun TFT 18" Extend-A-Gun 3". (MODEL XG18VL-XL) for crossfire monitor. | $2,041 |
| 4417-0127 | Chrome discharge elbow 3"FNST x 2.5"MNST 30 Deg [#LOC]. | $261 |
| 4417-0129 | Left side 2.5" pump panel discharges on Waterous pump to be side by side. For use with Side Mount Pump Module. | $830 |
| 4417-0130 | Task Force Tip Hurricane XFI-PLNJ Manual Monitor with MST-4NJ-2.5"NH Quad Stack Tips and M-R1000-NJ Automatic Nozzle. | $3,761 |
| 4417-0135 | Addition Automatic drain valve. For: front bumper discharge. Loction under front bumper at lowest point. | $83 |
| 4417-0138 | Officer side pump panel shall have polished stainless steel split escutcheon plates mounted in place for each discharge/intake. The escutcheon plates will be fastened in place to allow quick disassembly to permit the hinge to operate. | $248 |
| 4417-0140 | Crosslay 1 valve control to be electric 9313 comtroller. | $1,895 |
| 4417-0143 | Lever controls to be Innovative Controls T-handle Top Mmount Valve Controls. | $42 |
| 4417-0147 | Special piping run for 2.5" bumper discharge. Run piping thru back wall of center tray down low offset to officer side (approximately 1" clearance between pipe and officer side tray wall) run piping into tray approx halfway then 90 degrees up to top of gravel shield. | $190 |
| 4417-0149 | Akron DeckMaster 3440 electric 1250 GPM monitor w/stow package. Include 1577 SaberMaster 2.5" Nozzle and 3600 Wireless Remote Control. (DND OF CANADA) | $14,693 |
| 4417-0150 | Manual override access hole to be supplied in officer's side pump panel to access the override on the 4" discharge .Wrench required for manual override shall be located in vicinity of access panel. | $86 |
| 4417-0153 | Elkhart Cobra EXM monitor with panel mounted and hand-held remote controls w/adapter to mount to deck gun discharge or extender. Include SM-1250E nozzle and EXM stow module. | $11,415 |
| 4417-0154 | Additional electric controller for discharge electric valve locate adjacent to the outlet. Locate.[#LOC]. | $1,772 |
| 4417-0158 | Deck Gun Discharge piping shall be extended flush with top of booster reels. | $266 |
| 4417-0159 | Monitor Scorpion 8294-02 Monitor w/2000 GPM Nozzle and ST-195 stacked tips (tips shipped loose). | $9,346 |
| 4417-0160 | Thread Type: All 1.5" discharges to be NEW CHICAGO FD 1.933 x 11 1/2 threads per inch. All 2.5" inlets and intake releif valve dump pipe to be 2.99 x 7 1/2 NEW CHICAGO FD threads per inch. | $549 |
| 4417-0162 | Akron DeckMaster 3440 UII CAN electric 1250 GPM monitor w/stow. | $11,781 |
| 4417-0163 | Additional control for deck gun valve handwheel control locate adjacent to discharge outlet. Hand wheel to be extended to top of pan. | $1,472 |
| 4417-0164 | Deck Gun Discharge Piping. The deck gun discharge piping shall terminate 11" above storage pan floor with a 4 bolt flange. (NOT TO AFFECT OAH W/8297 MONITOR) | $168 |
| 4417-0165 | Elkhart 8500 Vulcan Monitor Hand Wheel Control. | $2,421 |
| 4417-0166 | Monitor 3" TFT Monsoon Electric with TFT Master Stream 1500 gpm electric Nozzle. Include panel mount and hand held Remote. | $11,704 |
| 4417-0171 | Deck Gun Pipe. The piping for the deck gun shall terminate with a 4 bolt flange. | $168 |
| 4417-0178 | Task Force Tip Hurricane Manual Monitor XFIH-D61A female NPT thread for use with Manual Extend-a-gun. | $1,607 |
| 4417-0179 | Task Force 2.5 Master Stream 1250 Series M-R1250-NJ Manual Nozzle | $1,414 |
| 4417-0180 | Task Force Tip Hurricane XFIH- Manual Monitor with MST-4NJ-2.5"NH Quad Stack Tips and M-R1250-NJ Automatic Nozzle. | $3,761 |
| 4417-0182 | TM Valve controls to be Innovative Controls T-handles with grip activitated lock. | $46 |
| 4417-0183 | Monitor Scorpion 8294-02 Monitor w/2000gpm Nozzle. | $9,135 |
| 4417-0184 | TM Valve controls to be Innovative Controls T-handles with grip activitated lock and cable actuators. | $169 |
| 4417-0185 | Innovative Controls discharge and intake bezels with integral color code and verbiage for side mount pump panel. | $497 |
| 4417-0186 | Innovative Controls discharge and intake bezels with color code and verbiage for top mount pump panel. | $320 |
| 4417-0188 | TM Valve controls to be Innovative Controls Twist-Lock handles. | $46 |
| 4417-0189 | Deck gun TFT 12" Extend-A-Gun 3". With XL connection for a TFT monitor. | $2,041 |

| Item No. | Description | |
|---|---|---|
| 4417-0192 | Innovative Controls discharge and intake bezels with integral color code and verbiage for rear mount pump panel. | $341 |
| 4417-0193 | Extend Driver Hosebed up 16" from hosebed floor. | $417 |
| 4417-0196 | Task Force Tip Hurricane XFIH-DL1A Manual Monitor with MST-4NJ-2.5"NH Quad Stack Tips and M-R1250-NJ Automatic Nozzle. | $4,070 |
| 4417-0197 | The crosslay preconnects shall be mounted vertical approximately 1" below the top of the pump module xlay when installed. Preconnect #1 will deploy off driver side and preconnect #2 will deploy off officer side. | $119 |
| 4417-0200 | Chrome discharge elbow 3"FNST x 2.5"MNST 45 Deg with cap. | $249 |
| 4417-0203 | Innovative Controls discharge and intake bezels with integral color code and verbiage for AP50 pump. | $124 |
| 4417-0204 | Trident Hand Wheel Control.(In place of standard push/pull rod.): Location [#LOC]. | $1,034 |
| 4417-0206 | Innovative Controls 3/4" Bleeder drain valve plumbed to: direct/inlet tank fill. | $119 |
| 4417-0208 | Elkhart Cobra EXM monitor with panel mounted and hand-held remote controls w/adapter to mount to deck gun discharge or extender. Include ST-194 stack tips and EXM stow module. | $9,399 |
| 4417-0209 | Monitor Akron 3480 Electric StreamMaster II with 5178 2000gpm electric nozzle. | $12,640 |
| 4417-0213 | Discharge elbow 2.5"FNST x 2.5"MNST 45 Deg to be painted job color. | $249 |
| 4417-0214 | Monitor Akron 3480 Electric StreamMaster II 2000gpm with 5178 nozzle. Include a panel mount control with stow and hand held wireless remote control. | $12,942 |
| 4417-0216 | Superior style cable controls for side mount. | $261 |
| 4417-0220 | Akron 5075 Akromatic 2.5" master stream nozzle for an Akron 3440 DeckMaster monitor. | $1,799 |
| 4417-0221 | Thread Type: All 1.5" discharges to be NYFD threads. | $326 |
| 4417-0222 | Extend-a-Gun piping shall terminate with 4 bolt flange and be position in storage pan so it don't affect OAH w/8297 MONITOR. | $168 |
| 4417-0224 | Additional control for deck gun valve push/pull control locate adjacent to discharge outlet. | $800 |
| 4417-0226 | A sensor shall be located at the monitor that signals the door ajar light in the cab to indicate that the monitor is raised. | $248 |
| 4417-0229 | The Akron electric controller to have Lexan guardr cover. (SEE PICTURE IN FILE) | $115 |
| 4417-0233 | Monitor Akron 3483 Manual with 5160 nozzle. | $6,320 |
| 4417-0235 | Akron DeckMaster 3440 UII CAN electric 1250 GPM monitor w/stow. 1577 SaberMaste 1250gpm nozzle. | $14,265 |
| 4417-0238 | Trident 6" Hand Wheel Control.(In place of standard push/pull rod.): Location [#LOC]. | $1,226 |
| 4417-0239 | Rack and Sector Actuator Control.(In place of standard.): Location right side 2.5" discharge and left front hosebed. | $266 |
| 4417-0240 | Task Force Tip Hurricane XFIE-FLNJ Manual Monitor with MST-4NJ-2.5" NH and M-R1250-NJ Automatic Nozzle. | $3,377 |
| 4417-0241 | Akron Apollo (3433) High Rise Monitor. Include lift off and direct mount only. Include Hi-Riser direct mount base. | $3,909 |
| 4420-0026 | Williams "75 Lb. Dry Chemical Skid Unit w/4500 PSI Air-pack Bottle.Locate in [#LOC]. | $6,621 |
| 4430-0008 | Advent 30 Foam System for a Single Foam Tank | $20,545 |
| 4430-0009 | Advent 60 Foam System for a Single Foam Tank | $24,423 |
| 4430-0010 | Advent 120 Foam System A and B Type | $31,325 |
| 4430-0011 | 1600 Rockwood Around The Pump Foam System | $4,314 |
| 4430-0013 | Williams 1500 Around-The-Pump foam system. | $7,321 |
| 4430-0014 | Hale 2.1A FoamLogix foam system. | $7,272 |
| 4430-0015 | Hale 3.3 FoamLogix foam system. | $15,448 |
| 4430-0016 | 5.0 Hale FoamLogix Foam System. | $17,416 |
| 4430-0017 | 400 Rockwood around the pump foam system. | $3,250 |
| 4430-0018 | 1600 Hypro/FoamPro foam system. | $8,436 |
| 4430-0019 | 2001 Hypro/FoamPro foam system. | $13,700 |
| 4430-0020 | 2002 Hypro/FoamPro foam system. | $17,462 |
| 4430-0022 | Hot Shot II 150 Foam System. | $52,646 |
| 4430-0023 | Hot Shot II 300 Foam System | $56,019 |
| 4430-0031 | Eclipse Compressed Air Foam System 1000 GPM Manifold w/2002 FoamPro. | $81,505 |
| 4430-0039 | Eclipse Compressed Air Foam System 500 GPM Manifold w/2001 FoamPro | $76,002 |
| 4430-0041 | WATP 500 A/B Foam System Include 1.5" Foam pick up. | $10,012 |
| 4430-0042 | Advent 12 Foam System for a Single Foam Tank | $20,332 |
| 4430-0043 | Advent 12 Dual Foam System for Dual Foam Tanks | $22,322 |
| 4430-0045 | 95 GPM Akron Foam Eductor. Location: [#LOC]. | $2,233 |
| 4430-0046 | 125 GPM Elkhart Foam Eductor Location: [#LOC] | $2,784 |
| 4430-0047 | 125 GPM Akron foam eductor. Location: [#LOC]. | $2,551 |
| 4430-0048 | 95 GPM Elkhart Foam Eductor Location: [#LOC] | $2,540 |
| 4430-0051 | Advent 30 Dual Foam System for Dual Foam Tanks | $25,263 |
| 4430-0052 | CAFSPRO with 3.3 Foam Logix Compressed Air Foam System with 750gpm Manifold | $61,342 |
| 4430-0053 | CAFSPRO with 5.0 Foam Logix Compressed Air Foam System with 750gpm Manifold | $62,385 |

| Item No. | Description | |
|---|---|---|
| 4430-0056 | 125 GPM Elkhart Foam Eductor w/air actuated foam valve Location: [#LOC] | $3,360 |
| 4430-0057 | 125 GPM Akron Foam Eductor w/air actuated foam valve. Location: [#LOC]. | $2,990 |
| 4430-0058 | Hot Shift Clutch - Required with CAFS system | $3,044 |
| 4430-0059 | Eclipse Compressed Air Foam System 500 GPM Manifold w/2002 FoamPro. | $79,765 |
| 4430-0060 | CAFSPRO 5.0 FoamLogix Compressed Air Foam System with 1000 GPM manifold. | $64,077 |
| 4430-0061 | FoamPro 3012 foam system hydraulics PTO driven. | $23,234 |
| 4430-0062 | Advent 120 Foam System single | $28,706 |
| 4430-0063 | FoamPro 3040D Foam System with elect/hyd drive. | $40,226 |
| 4430-0066 | Foam Tank To Pump 1" Air/Act for Dealer install foam system. | $852 |
| 4430-0070 | 125 GPM Akron Simple Apparatus Foam System | $1,622 |
| 4430-0071 | 1500V Williams A/B Around The Pump foam system. Include A/B tanks control. | $9,007 |
| 4430-0073 | 1.5 Feecon Around The Pump Foam System | $4,385 |
| 4430-0075 | 2.0 Feecon Around The Pump Foam System | $4,513 |
| 4430-0076 | Eclipse Waterous Compressed Air Foam System 1000 GPM Manifold. | $64,046 |
| 4430-0077 | Waterous Advantus 6.0 Foam System | $19,600 |
| 4430-0078 | Classic 140 Compressed Air Foam System. Shall include (5) Discharge outlets (1) 2.5" Left Hosebed Preconnect Discharge (2) 1.5" Crosslay outlets and (2) booster reels. | $42,548 |
| 4430-0079 | The foam system performance shall be tested and certified in compliance with the applicable NFPA 1901 requirements. | $294 |
| 4430-0080 | The balanced pressure foam system performance shall be tested and certified in compliance with 2009 NFPA 1901. | $585 |
| 4430-0081 | 1500 Williams Around The Pump Foam System Up Graded to 2000gpm at 3% | $2,856 |
| 4430-0087 | Advent 60 Foam System for a dual Foam Tank. | $29,784 |
| 4430-0089 | The main pump manifold to have water loop for dealer installed foam system (Class A Foam System) to noted preconnects/discharges | $756 |
| 4430-0093 | Venom 5.0 Hypro/Foam Pro Foam System. | $17,905 |
| 4430-0094 | Advent 12 Elecrict (230) Dual Foam System for Dual Foam Tanks | $25,392 |
| 4430-0107 | WATP 500 B Foam System. Includes 1.5" Foam pick-up. | $8,422 |
| 4430-0108 | FRC MFA200 Class A around the pump foam system. | $2,673 |
| 4430-0109 | Waterous Advantus 3.0 foam system. | $14,252 |
| 4430-0112 | 125 GPM Akron Foam Eductor w/manual panel mount 1/4 turn foam valves (1) for A tank and (1) for B tank. Location: [#LOC] | $3,306 |
| 4430-0113 | The foam system shall be factory tested at minimum maximum and midrange. | $294 |
| 4430-0114 | Eclipse Compressed Air Foam System 3" Manifold w/Advantus 6.0 Foam system. | $75,334 |
| 4430-0115 | 125 GPM Akron foam eductor system with air actuation for both foam eductor and foam supply valve. Location: [#LOC]. | $3,754 |
| 4430-0116 | FoamPro 3040 Foam System hyd drive. (FoamPro Low Flow 130gpm at 3%) | $39,853 |
| 4430-0117 | 1500V Williams A/B Around The Pump Foam System with Single Tank and Aux Pickup to be use for Class A or Class B foam inlet. | $9,567 |
| 4430-0118 | FoamPro AccuMax 3040 Foam System hyd drive with Multi-Piont Injection and low flow option. | $39,853 |
| 4430-0119 | FoamPro AccuMax 3040 Foam System hyd drive with Multi-Piont Injection and low flow option. | $40,249 |
| 4430-0120 | 1500V Williams Manual A/B Around The Pump foam system with pickup. Include manual A/B tanks control with manual .75 flush valve. | $9,060 |
| 4430-0122 | 1601 Hypro/FoamPro foam system. | $7,723 |
| 4430-0123 | FoamPro AccuMax 3060 Foam System hyd drive with Multi-Piont Injection Manual Override and low flow option. Includes "Auto-Start" system. | $61,656 |
| 4430-0128 | Hale SmartCAFS 5.0 FoamLogix Compressed Air Foam System with 1000 GPM manifold. | $63,582 |
| 4430-0130 | Waterous 200-P PTO Platinum Compressed Air Foam System | $28,405 |
| 4430-0131 | Waterous 140-P PTO Platinum Compressed Air Foam System | $27,701 |
| 4430-0132 | Waterous 80-P PTO Platinum Compressed Air Foam System | $21,156 |
| 4430-0133 | Darley 150 ODIN Compressed Air Foam System. | $20,632 |
| 4430-0134 | FoamPro 2002ELECT/3060HYD Foam System. FoamPro 2002 system for Class A low flow and 3060 system for high flow Class B faom. (HILLSBOROUGH COUNTY) | $50,105 |
| 4430-0135 | 125 GPM Akron Foam Eductor w/manual panel mount 1/4 turn foam valves. Include push/pull for foam eductor Location: [#LOC] | $3,101 |
| 4430-0136 | Darley 150-PTO Compressed Air Foam System | $26,227 |
| 4430-0137 | 95 GPM Akron Foam Eductor Air Actuated. Plumb to both 1.5" preconnects. | $2,953 |
| 4430-0139 | 95 GPM Akron Foam Eductor w/air actuated foam valve. Location: [#LOC]. | $2,953 |
| 4430-0140 | Williams 1500 Around-The-Pump foam system. Include air actuated aux foam inlet valve IPOS control at operator panel. | $7,568 |
| 4430-0142 | Advent 30 Foam System for a Single Foam Tank | $32,193 |
| 4430-0144 | 1.5 Feecon Around The Pump Foam System | $8,340 |
| 4430-0145 | FRC TurboFoam TFC400 foam system. Include FRC A/B Electric Selector. | $20,649 |
| 4430-0147 | Waterous One Step Compressed Air Foam System with Advantus 3.0 foam system. | $89,115 |

| Item No. | Description | |
|---|---|---|
| 4430-0148 | FoamPro Turbo Ultra High Pressure foam system with a Dual-Action spray gun. Include booster reel model E1520-17-18 with 100' of 5/8" high pressure hose. Location L1. | $8,048 |
| 4430-0149 | 125 GPM Akron foam eductor system with air actuation foam eductor. Location: [#LOC]. | $3,644 |
| 4432-0001 | Akron 5178 Electric 2000 GPM Nozzle. | $2,348 |
| 4432-0002 | Akron 5070 Manual 2000 GPM Nozzle | $1,806 |
| 4432-0003 | Elkhart SM2000 Electric Nozzle | $2,334 |
| 4432-0009 | Hot Shot Ratio Controller 2" Discharge. Plumbed to: [#LOC]. | $2,151 |
| 4432-0010 | Hot Shot Ratio Controller 2.5" Discharge. Plumbed to: [#LOC]. | $2,214 |
| 4432-0011 | Hot Shot Ratio Controller 3" Discharge. Plumbed to: [#LOC]. | $2,285 |
| 4432-0012 | Advent Ratio Controller 2" Discharge. Plumbed to: [#LOC] | $1,761 |
| 4432-0013 | Advent Ratio Controller 2.5" Discharge. Plumbed to: [#LOC] | $1,764 |
| 4432-0014 | Advent Ratio Controller 3" Discharge. Plumbed to: [#LOC] | $1,790 |
| 4432-0015 | Advent Ratio Controller 4" Discharge. Plumbed to: [#LOC] | $1,983 |
| 4432-0016 | Advent Ratio Controller 5" Discharge. Plumbed to: [#LOC] | $3,615 |
| 4432-0019 | Foam Pro Remote Start Switch | $714 |
| 4432-0020 | Eclipse 1.5"/3.0" Compressed Air Foam System Discharge Kit. Location: [#LOC]. | $23 |
| 4432-0022 | 1.5" Compressed Air Foam System Discharge Kit Location: [#LOC] | $344 |
| 4432-0023 | 2.0" Compressed Air Foam System Discharge Kit. Location: [#LOC]. | $347 |
| 4432-0024 | 2.5" Compressed Air Foam System Discharge Kit. Location: [#LOC]. | $349 |
| 4432-0025 | 3.0" Compressed Air Foam System Discharge Kit Location: [#LOC] | $391 |
| 4432-0026 | 3" Deck Gun Discharge Eclipse Compressed Air Foam System | $3,819 |
| 4432-0027 | 3" Deck Gun Compressed Air Foam System | $4,148 |
| 4432-0028 | Pump foam transfer 15 GPM 12 volt mounted in vehicle body. Activation switch operated from driver's side pump panel ARFF. | $2,108 |
| 4432-0036 | A/B Hypro/FoamPro manual foam selector. | $2,304 |
| 4432-0037 | A/B Class 1 manual foam selector. | $3,326 |
| 4432-0045 | Hot Shift Clutch | $3,134 |
| 4432-0054 | Akron Quick Disconnect Foam Pickup Tube on Driver's Side Pump Panel for Eductor. Located on: [#LOC]. | $484 |
| 4432-0055 | Elkhart Quick Disconnect Foam Pickup Tube on Driver's Side Pump Panel for Eductor Located on: [#LOC] | $687 |
| 4432-0056 | Hale EZ-Fill foam system for a single foam tank. Includes clear hose wand (shipped loose). Controller and connection port located [#LOC]. | $2,831 |
| 4432-0057 | Hale EZ-Fill foam system for dual foam tank. Includes clear hose wand (ship loose). Controller and connection port located [#LOC]. | $3,194 |
| 4432-0058 | Akron quick-disconnect foam pickup tube on officer's side pump panel for eductor. Located on: [#LOC]. | $484 |
| 4432-0059 | Elkhart Quick Disconnect Foam Pickup Tube on Officer's Side Pump Panel for Eductor Located on: [#LOC] | $687 |
| 4432-0060 | Label for ATP foam systems. | $36 |
| 4432-0061 | FoamPro foam system refill. Includes clear hose wand (ship loose). Controller and connection port located [#LOC]. | $3,200 |
| 4432-0063 | Hale FoamLogix air actuated A/B selector. | $3,764 |
| 4432-0064 | Hypro FoamPro electric actuated A/B selector. | $3,533 |
| 4432-0065 | 3" Deck Gun CAFSPRO Compressed Air Foam System. | $6,615 |
| 4432-0066 | Additional 3/4" Foam Tank Valve for 95 Eductor and Dual Foam Cells | $467 |
| 4432-0070 | Hot Shot Ratio Controller 4" Discharge. Plumbed to: [#LOC]. | $3,048 |
| 4432-0071 | Foam Pickup 2" on Driver's Side Pump Panel for 3040D Foam System with Pickup Tube.(Montreal only) | $1,120 |
| 4432-0072 | Foam Tank Fill 1.5" Air Act for a 3040D Foam System.(Montreal only) | $646 |
| 4432-0074 | .375 Foam Maniflod Drain | $136 |
| 4432-0075 | FoamPro Advanced Digital Controller "auto start". | $139 |
| 4432-0076 | Foam Pickup 2" on Officer's Side Pump Panel for 3040D Foam System with Pickup Tube.(Montreal only) | $1,120 |
| 4432-0077 | Foam Pickup 10 feet with 1.0 PVC Clear Spiraflex Hose IPOS | $244 |
| 4432-0078 | Foam tank drain plumbed to side panel with valve and 3/4" male garden hose connection. To allow filling of remote foam unit and pails from tank. | $875 |
| 4432-0079 | A/B Class 1 Manual Foam Selector | $3,326 |
| 4432-0080 | Special CAFS/FOAM Manifold for (4) preconnects Deck Gun and 3" Right Rear discharge. | $6,116 |
| 4432-0082 | Foam Pickup 2" on Side Pump Panel. With Manual valve and Pickup Tube. | $814 |
| 4432-0083 | Deck Gun Foam Tank To Pump Connection Provide a Manual 1.5" Valve Locate Next to Deck gun outlet. | $816 |
| 4432-0089 | CAFS Manual Air Valve to be .3/4" Valve in place of standard. | $141 |
| 4432-0090 | CAFS/Foam System Operation Label "Operate only (2) 1 3/4" Discharges or (1) 2 1/2" at a time" | $186 |
| 4432-0091 | Special design 5" foam/water manifold with check valves. | $3,894 |

| Item No. | Description | |
|---|---|---|
| 4432-0092 | FoamPro Remote Start/Stop in cab.MultiFlo Interface and Dual Injection control located on operator panel. | $7,189 |
| 4432-0093 | Hot Shot Ratio Controller 5". Plumbed to: [#LOC]. | $3,107 |
| 4432-0094 | Waterous Electric Actuated A/B Selector. | $3,380 |
| 4432-0097 | .75" Foam Manifold Drain with 1/4 turn valve. | $467 |
| 4432-0098 | Eclipse Waterous TC20 T-Case W/Compressed Air Foam System. For a S1OOD Waterous pump. | $53,968 |
| 4432-0099 | Foam System Plumbed to [#LOC]. | $306 |
| 4432-0100 | 2.0" Compressed Air Foam System Discharge Kit with Electric actuated 1/2" valve. Location: [#LOC]. | $380 |
| 4432-0101 | 2.5" Compressed Air Foam System Discharge Kit with Electric actuated 3/4" valve. Location: [#LOC]. | $384 |
| 4432-0104 | Hale Manual Single Foam Flush System. | $1,178 |
| 4432-0105 | A/B Foam Selector locate Driver side walk way recess in box on diamond plate panel at front of module. | $178 |
| 4432-0108 | Hot Shot Ratio Controller 5" Discharge with adjustable metering valve. Plumbed to: [#LOC] | $3,107 |
| 4432-0109 | Hot Shot Ratio Controller 3" Discharge with adjustable metering valve. Plumbed to: [#LOC] | $2,285 |
| 4432-0110 | Hot Shot Ratio Controller 2" Discharge with adjustable metering valve. Plumbed to: [#LOC] | $2,151 |
| 4432-0113 | Foam Intake Test Port Locate on the intake side of pump between the strainer and the pump bulkhead fitting is to be on operator pump panel. | $98 |
| 4432-0114 | Foam testing. The foam system shall be calibrated for 1 X 3 Thunderstrom foam AR-AFFF concentrate. The foam propotioning system shall provide .25% .5% 1% and 3% foam solutions within the allowable concentration ranges required in NFPA #1901. Each percentage shall be tested at a high and low flow and a revit shall be install at mid point.. | $2,098 |
| 4432-0115 | Foam ready manifold for a Hale FoamLogix or a FoamPro system with 3" plumbing feeding the manifold so the dealer can install the Hale or FoamPro manifold. | $889 |
| 4432-0117 | 1.5" FNST Hydro- Foam Aux Foam pickup. The 1.5" FNST foam inlet fitting shall be located on officer side pump panel with a electic over air control valve. And be control at the operator panel. | $1,412 |
| 4432-0118 | Foam Strainer Pump Panel Mount with 1" connection ports and 2.5" NST cap. (IPOS strainer for foam system.) | $1,082 |
| 4432-0119 | Foam Strainer Pump Panel Mount with 1" connection ports and 2.5" NST cap. (For Foam Refill) | $1,082 |
| 4432-0120 | Special 5" FOAM Manifold for all discharge outlets to plumb to foam. | $3,312 |
| 4432-0121 | Foam Tank Supply/Flush 1" valves will be electric control operated through the V-MUX system. The flush valve to be located as close to foam tank supply valve as possible. A manual flush drain .75" valve will be located under the officer's side running board. | $1,059 |
| 4432-0122 | A 1.50" x 10' reinforced concentrate hose and stinger shall be provided with NST threads to connect to the foam inlet as (shipped loose) for auxiliary foam operations. | $287 |
| 4432-0123 | Eclipse 1.5"/3.0" Compressed Air Foam System Discharge Kit Location: [#LOC] | $548 |
| 4432-0125 | 6" Ratio Controller for Hot Shot II System. Include metering valve. Location: [#LOC]. | $3,992 |
| 4432-0134 | Eclipse 1.5"/3.0" Compressed Air Foam System Discharge Kit. Location: [#LOC]. | $306 |
| 4432-0135 | CAFS Audible w/light Low Air Alarm shall be tied into the CAFS air system. If it drop below 90PSI the alarm aviate. | $365 |
| 4432-0137 | Hot Shot Ratio Controller 6" Discharge with adjustable metering valve. Plumbed to: [#LOC] | $4,305 |
| 4432-0138 | Hot Shot Ratio Controller 2.5" Discharge with adjustable metering valve. Plumbed to: [#LOC] | $3,097 |
| 4432-0151 | FoamPro aux foam fill kit. Include check valve level sensor placard and camlok connection. | $748 |
| 4432-0152 | 1.5" Foam Tank to pump Electric/Air Actuated. With a guard switch cover adjacent to the foam control display. | $1,040 |
| 4432-0153 | CAFS system water drain shall be extended out to pump panel. | $237 |
| 4432-0159 | CAFs system drains shall be extended to the officer's side pump panel area. | $356 |
| 4432-0160 | 3" Compressed Air Foam System Discharge Kit with Electric actuated 3/4" valve. Location: [#LOC] | $444 |
| 4432-0161 | 1.5" Compressed Air Foam System Discharge Kit with Electric actuated 1/2" valve. Location: [#LOC] | $379 |
| 4432-0162 | 6" High Flow Ratio Controller for Hot Shot II System. Includes metering valve. Location: [#LOC]. | $3,991 |
| 4432-0163 | 1.5" Foam Tank to pump Air Actuated. With a guard switch cover adjacent to the foam control display. | $1,039 |
| 4432-0164 | Waterous Electric Actuated A/B Selector. A to be plumb to the foam tank and B to be plumb to the left pump panel for an aux foam pick-up. | $3,380 |
| 4432-0165 | Special design foam/water manifold to allow dealer supplied foam system to be plumbed to crosslay 1 crosslay 2 and rear discharge so they are foam ready. | $3,894 |
| 4432-0166 | Special design 4" foam manifold with check valve to prevent foam from back flowing into the water pump. Include 4" Check valve with 4" plumbing and drain. | $1,707 |
| 4432-0167 | FoamPro 1/2" Line Controller plumbed to [#LOC]. | $7,296 |
| 4432-0168 | Auto on power-up mode which automatically come on with pump in gear. | $139 |
| 4432-0169 | Advent Ratio Controller 2" Discharge. Special Orifice size .10 .250 .500 1.0 and 3.0% Plumbed to: [#LOC] | $1,761 |

| Item No. | Description | |
|---|---|---|
| 4432-0170 | Advent Ratio Controller 2.5" Discharge. Special Orifice size .10 .250 .500 1.0 and 3.0% Plumbed to: [#LOC] | $1,764 |
| 4432-0171 | Advent Ratio Controller 3" Discharge. Special Orifice size .10 .250 .500 1.0 and 3.0% Plumbed to: [#LOC] | $1,790 |
| 4432-0172 | Advent Ratio Controller 4" Discharge. Special Orifice size .10 .250 .500 1.0 and 3.0% Plumbed to: [#LOC] | $1,983 |
| 4432-0173 | An Elkhart quick-connect foam outlet with pick-up tube assembly permits foam from on-board tank supply or to a 5 gal. pails/buckets. For portable eductor. Install one on each side pump panel. | $1,852 |
| 4432-0176 | A Elkhart quick-connect foam outlet with pick-up tube assembly permits foam from on-board tank supply or to a 5 gal. pails/buckets. For portable eductor. Location: [#LOC]. | $928 |
| 4432-0177 | FoamPro 3/4" Line Controller plumbed to [#LOC]. | $7,296 |
| 4432-0178 | Foam tank fill 1"electric line controllert for a foam system. | $875 |
| 4432-0179 | A Elkhart quick-connect foam outlet with pick-up tube assembly permits foam from on-board tank supply or to a 5 gal. pails/buckets. For portable eductor. Location: [#LOC]. | $798 |
| 4432-0180 | Foam Flush with 1/4" valve. Locate inside driver side upper pump access door rearward. | $467 |
| 4432-0182 | Extended warranty for Waterous CAFS compressor - 4 Years in addition to the standard 1 year warranty (parts only). | $2,645 |
| 4432-0183 | Hinged stainless steel switch guard cover for foam system air control switch Location on pump operator panel. | $119 |
| 4432-0185 | Foam Flush System. | $112 |
| 4432-0187 | Addition Foam Flush System. A 3/4" valve with garden hose bib connection mounted in pump compartment (1) for 2002 and (1) for 3060 system. They will be plumb to the foam supply line for flushing of the system. A check valve prevents water from entering the foam tank when the system is not being flushed. | $430 |
| 4432-0188 | Aux 2" foam system intake with swing handle. Locate to be driver side pump panel. | $1,128 |
| 4432-0189 | CAFS Compressor "Auto On". | $139 |
| 4432-0190 | .75" Foam Manifold Drain with lift lever 1/4 turn valve. | $319 |
| 4432-0191 | FoamPro off-board pickup. Includes clear hose wand (ship loose). Controller on operator panel and connection port located [#LOC]. | $3,379 |
| 4432-0193 | Foam ready Manifold for a Hale Foam Logix or a Foam Pro system- plumbed to front jumpline bottom 1.75" speedlay and officer side 2.5" discharge. W/3" plumbing. | $1,997 |
| 4432-0196 | A CAFS Compressor RPM interlock indicator light and label shall be on the pump operator panel. Indicator light will come on when engine RPM is to high to engage CAFS PTO. | $78 |
| 4432-0198 | Dual discharge port "Y" togehter plumb to 4" foam loop feeding the foam manifold to prevent friction loss and to keep pump head pressure to a minimum. | $149 |
| 4432-0207 | Hale EZ-Fill foam system for a single foam tank with dual pickup (1) left and (1) right pump panel. Includes clear hose wand (shipped loose). Controller to be located on left pump panel. | $3,263 |
| 4432-0208 | Foam tank B outlet valve shall have rubber hood latch as a secondary lock. | $192 |
| 4432-0211 | All foam service/drain valves to be brass or stainless steel IPOS. No PVC valves to be used. | $492 |
| 4432-0212 | Foam tank outlet 1.5" plumbed to pan. Include 1.5" valve manual control with cam-lock fiiting and cap located in the pan off set to officer side rearward. (Dealer supply HYDRO foam nozzle. | $1,086 |
| 4435-0001 | Class 1 Intelli-Tank water tank level gauge. On pump panel. | $498 |
| 4435-0002 | Class 1 Intelli-Tank foam tank level gauge. On pump panel. | $515 |
| 4435-0003 | Class 1 Intelli-Tank/Whelen 500 LED water tank level gauge package. Location of Whelen 500 tank level lights: [#LOC]. | $4,026 |
| 4435-0004 | Sight Tube Water Tank Level Gauge. Located driver's side front of body. | $513 |
| 4435-0005 | Innovative Controls 5 Water Tank Level Gauge | $468 |
| 4435-0006 | Innovated Contols 5 Foam Tank Level Gauge | $731 |
| 4435-0007 | Class 1 Water Bar graph style Tank Level Gauge. | $782 |
| 4435-0008 | Class 1 foam Bar graph style Tank Level Gauge. | $1,037 |
| 4435-0009 | Fire Research TankVision model WL2600 Class A foam tank level gauge. | $963 |
| 4435-0010 | Fire Research TankVision model WL2000 water tank level gauge. | $838 |
| 4435-0011 | Fire Research TankVision model WL2700 B foam tank level gauge. | $962 |
| 4435-0012 | Pump overheat indicator. | $371 |
| 4435-0013 | 4.5" Class 1 compound pressure gauge (30-0-600 PSI). | $197 |
| 4435-0014 | Dual Read 4.5" Pressure Gauge (30-0-600 psi/100-0-4000 KPA). | $295 |
| 4435-0015 | 2.5" Class 1 compound pressure gauge (30-0-600). Discharge(s): [#LOC]. | $142 |
| 4435-0016 | Dual Read 2.5" Pressure Gauge (30-0-600 psi/100-0-4000 KPA). Discharge: [#LOC]. | $200 |
| 4435-0018 | Dual Read 3.5" Pressure Gauge (30-0-600 psi/100-0-4000 KPA). Discharge: [#LOC] | $271 |
| 4435-0019 | 3.5" Class 1 compound pressure gauge (30-0-600). Discharge: [#LOC]. | $170 |
| 4435-0020 | MC Products gauge heater line controls and strips for 4 gauges. | $757 |
| 4435-0021 | Gauge heater strips additional (EA). | $145 |
| 4435-0022 | 6" NoShok pressure gauge (30-0-600). | $687 |
| 4435-0023 | 4" NoShok master pressure gauges (30-0-600). | $210 |

| Item No. | Description | |
|---|---|---|
| 4435-0024 | 6" Class 1 compound pressure gauge (30-0-600). | $677 |
| 4435-0025 | Flowminder Super System. Discharge: [#LOC]. | $2,796 |
| 4435-0026 | Flowminder System. Discharge: [#LOC]. | $1,808 |
| 4435-0027 | Flow Meter Value System. Discharge: [#LOC]. | $1,660 |
| 4435-0030 | Transmission temperature gauge. | $256 |
| 4435-0031 | Pump hourmeter on pump operator's panel. | $159 |
| 4435-0033 | Ammeter gauge on pump operator's panel. | $291 |
| 4435-0034 | Fuel level gauge on pump operator's panel. | $351 |
| 4435-0035 | Enfo III System on Pump Operator's Panel | $1,060 |
| 4435-0036 | Engine gauge package at the pump operator's panel. | $734 |
| 4435-0038 | Class 1 Engine Status Center on Pump Operator's Panel | $1,740 |
| 4435-0040 | FRC Tachplus engine monitoring display. | $1,427 |
| 4435-0047 | Class 1 Intelli-Tank water tank level gauge additional. Location: [#LOC]. | $572 |
| 4435-0049 | Class 1 tank level water LED graph gauge additional. Location: [#LOC]. | $782 |
| 4435-0050 | FRC Tank Level Water TankVision Gauge Additional. Location: [#LOC]. | $533 |
| 4435-0051 | Innovated Controls 5 Light Tank Level Water Gauge Additional Location: [#LOC] | $699 |
| 4435-0052 | Class 1 Tank Level Water Mini Gauge Additional. Location: [#LOC]. | $523 |
| 4435-0053 | FRC Tank Level Water TankVision model WLA205-A00 Mini Gauge. Location: [#LOC]. | $398 |
| 4435-0054 | Innovative Controls 5 Light Tank Level Water Mini Gauge. Location: [#LOC]. | $546 |
| 4435-0055 | Class 1 Tank Level Intelli Foam Gauge Additional. Location: [#LOC]. | $572 |
| 4435-0056 | Class 1 Tank Level Foam Mini Gauge Additional Location: [#LOC] | $523 |
| 4435-0057 | FRC Tank Level A Foam Tank Vision model WLA265-A00 Mini Gauge Additional. Location: [#LOC]. | $477 |
| 4435-0058 | FRC Tank Level B Foam Tank Vision model WLA205-A00 Mini Gauge Location: [#LOC] | $477 |
| 4435-0059 | Innovated Controls Tank Level Foam Mini Gauge Additional Location: [#LOC] | $546 |
| 4435-0063 | Duplex Master Gauge for CAFS or Industrial Foam Systems. | $529 |
| 4435-0064 | FRC Insight Ultimate model FPA400 combination pressure/flow gauge. Location: [#LOC]. | $2,107 |
| 4435-0065 | 2.5" NoShok pressure gauge (30-0-600). For: [#LOC]. | $153 |
| 4435-0066 | IC5/Whelen 500 Water Tank Level Gauge Package Location of Whelen 500 Tank Level Lights: [#LOC] | $3,997 |
| 4435-0067 | Class 1/Whelen PSTank Water Tank Level Gauge Package. Location of Whelen PSTank Strip-Lights: [#LOC]. | $1,897 |
| 4435-0068 | IC5/Whelen PSTank Water Tank Level Gauge Package Location of Whelen PSTank Strip-Lights: [#LOC] | $1,867 |
| 4435-0069 | Class 1 ENFO IV system on pump operator's panel. | $949 |
| 4435-0070 | Fire Research TankVision model WL2600 Class A and WL2700 Class B foam tank level gauges. | $1,918 |
| 4435-0071 | FRC Tank Vision model WLA205-A00 Tank Level A and B Foam Gauges Location: [#LOC] | $949 |
| 4435-0072 | Fire Research Tank Vision Water Tank Level Gauge with Automatic Tank Filling System model ATA400 Location: [#LOC] | $2,933 |
| 4435-0074 | FRC Water Tank Level Gauge with Driver for Spartan Chassis only. | $1,115 |
| 4435-0075 | Ashcroft 6" dry master intake and discharge gauges. | $588 |
| 4435-0076 | Ashcroft 3.5" dry discharge gauges. Provide for each discharge. | $1,483 |
| 4435-0081 | Audible and visual indicators on driver side pump panel. (1) audible/visual indicator for high engine temp and low oil pressure and (1) audible/visual for high trans temp. | $292 |
| 4435-0083 | Innovative Controls 10 LED SL series water tank level gauge. On pump panel. | $510 |
| 4435-0084 | Innovative Controls 10 LED series foam tank level gauge. On pump panel. | $731 |
| 4435-0085 | Innovative Controls 10 LED SL series tank level water gauge additional. Location: [#LOC]. | $699 |
| 4435-0086 | Innovative Controls 10 LED series Tank Level Water Mini Gauge. Location: [#LOC]. | $546 |
| 4435-0087 | Innovative Controls IC 10 LED SL series Tank Level Foam Mini Gauge Additional. Location: [#LOC]. | $546 |
| 4435-0088 | IC 10 LED SL series/Whelen 500 water tank level gauge package. Location of Whelen 500 tank level lights: [#LOC]. | $3,997 |
| 4435-0089 | IC 10 LED SL series/Whelen PSTank water tank level gauge package. Location of Whelen PSTank Strip Lights: [#LOC]. | $1,867 |
| 4435-0090 | Additional PSTank Level Strip-Light. Located: [#LOC]. | $455 |
| 4435-0092 | 2.5" Class 1 compound pressure gauge (30-0-400). Discharge: [#LOC]. | $142 |
| 4435-0093 | 3.5" Class 1 pressure gauge (30-0-400). Discharge: [#LOC]. | $170 |
| 4435-0094 | Class 1 4-1/2" compound pressure gauge (30-0-400 PSI). | $197 |
| 4435-0099 | Flow Meter Value System. Discharge: right side discharge 4 | $1,660 |
| 4435-0100 | Flow Meter Value System. Discharge: left side discharge 4 | $1,660 |
| 4435-0101 | 2.5" Span Pressure Gauge (30-0-600). Discharge: [#LOC]. | $135 |
| 4435-0102 | 3.5" Span Pressure Gauge (30-0-600). Discharge: [#LOC]. | $164 |
| 4435-0103 | 4.5" Span Pressure Gauge (30-0-600 PSI). | $191 |
| 4435-0104 | MC Series 2000 4 Light Water Tank Level Gauge | $659 |
| 4435-0105 | MC Series 2000 4 Light Series Foam Tank Level Gauge | $828 |
| 4435-0106 | Dual Scale 3.5" Pressure Gauge 0-400 PSI / 100-2800 KPA. Replaces Standard | $327 |
| 4435-0107 | Primer motor master disconnect cut-off switch. Locate on pump panel. | $219 |
| 4435-0108 | Digital Pressure Gauge IPO Duplex Gauge | $842 |

| Item No. | Description | |
|---|---|---|
| 4435-0109 | 2.5" Class 1 Pressure Gauge (30-0-600). IPO Duplex | $142 |
| 4435-0110 | Pump Overheat Gauge Indicator with Audible Alarm | $473 |
| 4435-0111 | MC Series 500 4 LED Series Water Tank Level Gauge | $781 |
| 4435-0112 | Class 1 Pressure 4.5" Gauge (30-0-300 PSI) | $197 |
| 4435-0113 | FRC TankVision/Whelen PSTank water tank level gauge package. Location of Whelen PSTank Strip-Lights: [#LOC]. | $2,517 |
| 4435-0114 | Digital CAFS CFM Flow Meter | $2,137 |
| 4435-0115 | 2.5" NoShok Pressure Gauge (-30-0-600 PSI/100-0-4000KPA). For: [#LOC]. | $171 |
| 4435-0116 | 4" NoShock Dual Read Pressure Gauge 30-0-600PSI/100-0-4000KPA | $222 |
| 4435-0117 | FRC Tank Level Foam Tank Vision Gauge Additional Location: [#LOC] | $605 |
| 4435-0118 | 4" NoShock Dual Read Pressure Gauge 30-0-400PSI/100-0-2800KPA | $222 |
| 4435-0119 | 2.5" NoShok Pressure Gauge (0-400 PSI/-0-2800KPA) For: [#LOC] | $171 |
| 4435-0120 | Duplex Master Gauge (0-400 PSI) for CAFS or Industrial Foam Systems. | $529 |
| 4435-0122 | Fire Research Tank Vision model WL2000 Water Tank Level Gauge w/an audible alarm low level buzzer shall be installed. The buzzer shall sound when the tank volume indicator drops to 1/4 tank. | $999 |
| 4435-0123 | FRC Insight model FPA410 Ultimate Pressure Gauge LPM/KPA Location: [#LOC] | $2,107 |
| 4435-0124 | 6" Class 1 Compound Pressure Gauge (30-0-400 PSI). | $663 |
| 4435-0125 | Class Digital Pressure Gauge Discharge: [#LOC] | $842 |
| 4435-0126 | Digital Master Pressure Gauge | $804 |
| 4435-0127 | 3.5" Span Pressure Gauge (0-400). Discharge: [#LOC] | $173 |
| 4435-0128 | Dual Read 2.5" Span Pressure Gauge (0-300 psi/0-2050KPA). Discharge: [#LOC] | $189 |
| 4435-0129 | Dual Read 6.0" Span Pressure Gauge (30-0-400 psi/100-0-2800KPA) | $386 |
| 4435-0130 | FRC Insight model FPA400 Ultimate Master Flow Gauge | $1,626 |
| 4435-0131 | 2.5" Class 1 Pressure Gauge (0-300). Discharge: [#LOC] | $150 |
| 4435-0133 | FRC/Whelen 500 Water Tank Level Gauge Package Location of Whelen 500 Tank Level Lights: [#LOC] | $3,960 |
| 4435-0134 | FRC Foam Tank Level Gauge "Class B Foam" with Driver for Spartan Chassis only. | $1,257 |
| 4435-0135 | Class 1 Intelli/Whelen PSTank Water Tank Level Gauge Package Location of Whelen PSTank Strip-Lights: [#LOC] | $2,386 |
| 4435-0139 | Span Pressure 4" Gauge (0-400 PSI) | $197 |
| 4435-0140 | Span Master Intake/Pressure 4" 50/50 Gauge (30-0-300) | $329 |
| 4435-0147 | Innovative Controls 14 LED SL series Water Tank Level Gauge | $516 |
| 4435-0151 | 4.5" Class 1 Pressure Gauge (30-0-600) Black Face w/White letters. | $210 |
| 4435-0152 | 2.5" Class 1 Pressure Gauge (30-0-600). Discharge with Black Face and White Letters: [#LOC] | $150 |
| 4435-0155 | Dual Read 4.5" Span Pressure Gauge (30-0-600 psi/100-0-4000 KPA) | $295 |
| 4435-0156 | Class 1 Intelli-40 Tank Water Tank Level Gauge with Blue LED's. | $744 |
| 4435-0157 | Class 1 Intelli-40 Tank Foam Tank Level Gauge with Red LED's. | $711 |
| 4435-0158 | 6" Span Pressure Gauge (30-0-600) | $682 |
| 4435-0159 | Dual Read 2.5" Pressure Gauge (30-0-400 psi/100-0-2800KPA). Discharge: [#LOC] | $200 |
| 4435-0160 | Transmission Temperature Gauge with light and a buzzer alarm for audible warning. | $367 |
| 4435-0161 | Dual Read 4.5" Pressure Gauge (30-0-400 psi/100-0-2800 KPA) | $295 |
| 4435-0162 | IC10/Whelen M6 LED Water Tank Level Gauge Package Location of Whelen M6 LED Tank Level Lights: [#LOC] | $4,139 |
| 4435-0174 | Sight Tube Water Tank Level Gauge. Located on driver's pump panel. | $513 |
| 4435-0175 | Duplex Master Gauge (0-600 PSI) for CAFS or Industrial Foam Systems. | $606 |
| 4435-0177 | Innovated Controls 14 LED SL series Tank Level Water Gauge Additional Location: [#LOC] | $724 |
| 4435-0178 | Engine gauge package at the pump operator's panel. | $845 |
| 4435-0179 | Deluxe engine gauge package with fuel and transmission temp built into the tach gauge display at the pump operator's panel. | $966 |
| 4435-0180 | 2.5" Pressure Gauge Dual Read (0-400 PSI/-0-2700KPA) . Discharge: [#LOC]. Color: [#COL]. | $250 |
| 4435-0181 | 4.5" Pressure Gauge (30-0-400 psi/100-0-2758 KPA). Color: [#COL]. | $316 |
| 4435-0182 | FRC Insight model FPA412 Ultimate Pressure Gauge LPM/KPA with back lighting Location: [#LOC] | $2,272 |
| 4435-0183 | Sight Tube Water Tank Level Gauge with Indicator. Located inside pump compartment on driver's side as high/low as possible. | $513 |
| 4435-0184 | 2.5" NoShok pressure gauge (0-400). For: [#LOC]. | $153 |
| 4435-0185 | 4" NoShok master pressure gauges 30-0-400PSI. | $257 |
| 4435-0186 | Class 1 Tank Level Intelli 40 Water Gauge Additional Location: [#LOC] | $820 |
| 4435-0190 | IC10 Water with (1) Whelen PSTank Water Tank Level Gauge. Location of Whelen PSTank Strip-Lights: Officer side rear of front cab door. | $1,414 |
| 4435-0191 | Dual Scale 3.5" Pressure Gauge 0-400 PSI / 100-2800KPA.. Discharge: [#LOC]. | $276 |
| 4435-0193 | 2.5" Class 1 compound pressure gauge (0-400). Discharge: [#LOC]. | $142 |
| 4435-0196 | 2.5" Waterway Pressure Gauge Dual Read (30-0-600 psi/100-0-4140 KPA). Discharge: [#LOC]. Color: [#COL]. | $201 |
| 4435-0198 | 3.5" Class 1 pressure gauge (0-400). Discharge: [#LOC]. | $173 |

| Item No. | Description | |
|---|---|---|
| 4435-0199 | Class 1 Intelli-40M Tank Water Tank Level Gauge. | $763 |
| 4435-0200 | 2.5" Class 1 pressure gauge (0-600). Discharge: [#LOC]. | $138 |
| 4435-0202 | 4.5" Class 1 Discharge pressure gauge (0-600 PSI). | $142 |
| 4435-0203 | Additional Whelen 500 Tank Level Lights. Located: officer rear. | $908 |
| 4435-0205 | 3.5" LED Class 1 compound pressure gauge (30-0-400). Discharge: [#LOC]. Color: [#COL]. | $252 |
| 4435-0206 | 4.5" LED Class 1 compound pressure gauge (30-0-400). Color: [#COL]. | $252 |
| 4435-0209 | 2.5" LED Class 1 compound pressure gauge (30-0-400). Discharge: [#LOC]. Color: [#COL]. | $248 |
| 4435-0210 | PSTank Level Strip-Light Pair Located: [#LOC] (Chassis only option require sale codes for gauge and driver) | $910 |
| 4435-0212 | Generator hourmeter on officer side rear compartment. | $159 |
| 4435-0213 | Class 1 3-1/2" compound pressure gauge (30-0-400 PSI). Master intake and discharge gauges. | $344 |
| 4435-0214 | IC10 Water with (1) Whelen PSTank Water Tank Level Gauge. Location of IC10 LED tank level gauge on operator panel. Location of Whelen PSTank Strip-Lights: Officer side rear of body facing rearward. | $1,414 |
| 4435-0215 | Class 1 4-1/2" compound pressure gauge (30-0-400 PSI). Locate Auto Fill Inlet. | $197 |
| 4435-0216 | Class 1 Intelli-Tank water tank level gauge mounted on the rear of the body. Optimize mounting position on rear body using space not allocated by other equipment unless otherwise specified. | $498 |
| 4435-0217 | Duplex 4.5" Dual Read Master Gauge (0-600 psi/0-4000KPA) for CAFS or Industrial Foam Systems. | $529 |
| 4435-0218 | 6" LED Backlit compound pressure gauge (30-0-400). Color: [#COL]. | $555 |
| 4435-0219 | Water pump digital water temperature gauge. | $362 |
| 4435-0221 | Class 1 Intelli-40M Tank Foam Tank Level Gauge with red back ground. | $763 |
| 4435-0222 | Class 1 Intelli-40M Tank Foam Tank Level Gauge with green back ground. | $763 |
| 4435-0223 | Class 1 2.5" LED Backlit compound pressure gauge (30-0-400) package. Provide for each discharge. (SPECIAL COLOR INFO IN FILE) | $2,716 |
| 4435-0224 | 3.5" Class 1 pressure gauge (0-400). w/Class 1 Logo. Discharge: [#LOC]. | $169 |
| 4435-0225 | Gauge heater strips shall extend the full length of the gauge line. (Officer side discharge gauge lines will require 2 per line) | $124 |
| 4435-0226 | DEF level gauge on pump operator's panel. | $351 |
| 4435-0228 | Innovative Controls 10 LED SL series water tank level gauge. In R2 Compartment. | $510 |
| 4435-0229 | 2.5" LED Class 1pressure gauge (0-300). Discharge: [#LOC]. Color: [#COL]. | $201 |
| 4435-0231 | Class 1 Tank Level Intelli 40M Water Gauge Additional Location: [#LOC] | $761 |
| 4435-0232 | 4.5" LED Class 1 compound pressure gauge (30-0-300). Color: [#COL]. | $324 |
| 4435-0233 | Single Read 2.5" Thuemling Pressure Gauge (0-2800KPA. Location: One (1) for each discharge outlet. | $1,391 |
| 4435-0234 | Single Read 4.5" Thuemling Pressure Gauge (100-0-4000 KPA) (1) master intake and (1) master discharge gauges. | $573 |
| 4435-0236 | Ashcroft 6" dry master intake and discharge gauges. (30-0-300) | $733 |
| 4435-0237 | Ashcroft 3.5" dry discharge gauges. Provide for each discharge. (0-300) | $1,483 |
| 4435-0240 | Innovative Controls 10 LED SL series tank level foam gauge additional. Location: [#LOC]. | $731 |
| 4435-0241 | Innovative Controls 10 LED series foam tank level gauge with a bright yellow easy to read graphics overlay. On pump panel. | $730 |
| 4435-0242 | Sight Tube Water Tank Level Gauge. Located on driver's side adjacent to pump operator panel. | $512 |
| 4435-0243 | 4" Innovative Controls Brass Case Nite-Glo Master Pressure Gauges with Bezel. Intake 30-0-400 and Discharge 0-400. | $898 |
| 4435-0244 | 2.5" Innovative Controls brass case pressure gauge (0-400) with color code bezel. | $163 |
| 4435-0246 | 2.5" Innovative Controls stainless steel case pressure gauge (0-400) with color code bezel. | $143 |
| 4435-0247 | 4" Innovative Controls stainless steel case master pressure gauges with bezel. Intake 30-0-400 and discharge 0-400. | $406 |
| 4435-0248 | 2.5" Innovative Controls stainless steel case dual read pressure gauge (0-2750KPA/0-400PSI) with color code bezel. | $143 |
| 4435-0249 | 4" Innovative Controls stainless steel case master pressure gauges with bezel. Intake 30-0-400 and discharge 0-400 dual read KPA/PSI. | $406 |
| 4435-0250 | 2.5" Innovative Controls brass case pressure gauge (0-400) with color code bezel. | $163 |
| 4435-0251 | Innovative Controls SL Plus series water tank level gauge with E-One logo at the bottom. | $602 |
| 4435-0252 | Innovative Controls SL Plus series foam tank level gauge (foam tank A). | $602 |
| 4435-0253 | Innovative Controls SL Plus series foam tank level gauge (foam tank B). | $602 |
| 4435-0254 | 4" Innovative Controls brass case master pressure gauges with bezel. Intake 30-0-400 and discharge 0-400. | $605 |
| 4435-0255 | 4" Innovative Controls brass case master pressure gauges with bezel. Intake 30-0-400 and discharge 0-400 dual read KPA/PSI. | $596 |
| 4435-0257 | Additional Innovative Controls SL Plus series tank level water gauge. Location: [#LOC]. | $617 |
| 4435-0258 | Addition 4" Innovative Controls stainless steel case master pressure gauges 0-400. Locate driver side pump panel. | $235 |
| 4435-0261 | 4" Innovative Controls stainless steel case master pressure gauges with bezel. Intake 30-0-400 and duplex discharge 0-400 for CAFS and Industrial applications. | $1,373 |

| Item No. | Description | |
|---|---|---|
| 4435-0262 | 2.5" Innovative Controls Nite-Glo brass case pressure gauge (0-400) and color code bezel with blue light gauge illumination. | $324 |
| 4435-0263 | 2.5" Innovative Controls Nite-Glo brass case pressure gauge (0-400) and color code bezel with red light gauge illumination. | $324 |
| 4435-0264 | FRC TankVision/FRC Maxvision water tank level gauge package. Location of FRC Maxvision Strip-Lights: each side of cab towards rear | $2,620 |
| 4435-0266 | 2.5" Innovative Controls Nite-Glo brass case pressure gauge (0-400) and color code bezel with white light gauge illumination. | $324 |
| 4435-0269 | 4" Innovative Controls stainless steel case pressure gauge (0-400). Location: Master discharge pressure gauge. | $223 |
| 4435-0270 | IC SL PLUS series/Whelen PSTank water tank level gauge package. Location of Whelen PSTank Strip Lights: [#LOC]. | $2,421 |
| 4435-0271 | 2.5" LED Class 1pressure gauge (0-400). Discharge gauge. Color: [#COL]. | $248 |
| 4435-0272 | 4" Innovative Controls stainless steel case master pressure gauges with bezel. Intake 30-0-400 and duplex discharge 0-400 dual read KPA/PSI. for CAFS and Industrial applications. | $1,373 |
| 4435-0274 | 2.5" Innovative Controls stainless steel case pressure gauge (0-300) with color code bezel. | $143 |
| 4435-0275 | 4" Innovative Controls stainless steel case duplex pressure gauge (0-400) with color code bezel. | $1,079 |
| 4435-0277 | Class 1 ENFO IV system on pump operator's panel. (METRIC UNITS) | $949 |
| 4435-0278 | FRC Insight Ultimate model FPA-402 combination pressure/flow gauge w/ back light. Include color code bezel. | $2,179 |
| 4435-0279 | Class 1 3.5" discharge gauges. Provide for each discharge. (0-600) | $1,699 |
| 4435-0280 | 6" Class 1 master pressure gauges. Intake 30-0-600 and discharge 0-600. | $1,354 |
| 4435-0281 | Class 1 Intelli w/driver and (1) Whelen PSTank Water Tank Level Gauge. Location of Whelen PSTank Strip-Lights: Driver side upper body forward of scene light. | $1,222 |
| 4435-0282 | IC 10 LED SL series/Whelen 400 water tank level gauge package. Location of Whelen 400 tank level lights: Each side of upper pump panel. | $3,681 |
| 4435-0283 | 2.5" LED Class 1 compound pressure gauge (30-0-400). Color Red | $248 |
| 4435-0285 | Fire Research TankVision Pro model WL300-A00 water tank level gauge. | $723 |
| 4435-0286 | Fire Research TankVision Pro model WL360-A00 Class A foam tank level gauge. | $819 |
| 4435-0287 | Fire Research TankVision Pro model WLA300-B00 water level gauge Additional. Location: [#LOC]. | $638 |
| 4435-0288 | Fire Research TankVision Pro model WLA360-A00 Class A and WLA370-B00 Class B foam tank level gauges. | $1,636 |
| 4435-0289 | Fire Research TankVision Pro model WLA 370-A00 Class B foam tank level gauge. | $819 |
| 4435-0290 | Additional Monster Water Level Light. Located: [#LOC]. | $455 |
| 4435-0291 | 4" Innovative Controls stainless steel case master pressure gauges with bezel. Intake 30-0-400 and duplex discharge 0-400 for CAFS and Industrial applications. IPOS HALE | $406 |
| 4435-0292 | FRC TankVisionWLA300-B00/Whelen PSTank water tank level gauge package. Location of Whelen PSTank Strip-Lights: [#LOC]. | $2,517 |
| 4435-0293 | Class 1 3.5" discharge gauges. Provide for each discharge. (0-300) [#LOC] | $169 |
| 4435-0294 | 6" Class 1 Compound Pressure Gauge (30-0-400 PSI). | $663 |
| 4440-0004 | 2.5" side suction top mount control handle Akron manual valve. Location: [#LOC]. | $1,497 |
| 4440-0005 | 2.5" Left Intake Akron Manual Valve. | $1,128 |
| 4440-0006 | 2.5" Right intake Akron manual valve. | $1,128 |
| 4440-0007 | 2.5" Left Rear Intake Akron Manual Valve. (With rear discharge location to be outside or below). | $1,819 |
| 4440-0008 | 2.5" Right Rear Intake Akron Manual Valve.(With rear discharge location to be outside or below). | $1,322 |
| 4440-0010 | 3" Left Intake Akron Manual Valve. | $1,850 |
| 4440-0011 | 3" Right Intake Akron Manual Valve. | $1,892 |
| 4440-0012 | 3" right rear intake Akron manual valve. (With rear discharge location to be outside or below.) | $2,171 |
| 4440-0014 | 5" front intake without valve. | $3,587 |
| 4440-0015 | 5" Front Intake w/5" Air Actuated Valve and Relief. | $5,656 |
| 4440-0016 | 5" right rear intake no valve. | $2,738 |
| 4440-0017 | 5" Right Rear Intake w/5" Air Actuated Valve and Relief. | $4,555 |
| 4440-0018 | 2.5" Intake Akron Manual Valve Rear Mount | $961 |
| 4440-0019 | 4" Rear Intake Akron Electric Valve for Rear Mount | $3,751 |
| 4440-0025 | 5" front intake with no valve plumbed through front bumper. | $4,009 |
| 4440-0026 | 5" Front Intake w/5" Air Actuated Valve and Relief Plumbed Through Front Bumper. | $6,081 |
| 4440-0027 | 2.5" Left Intake Hale Manual Valve | $1,149 |
| 4440-0028 | 2.5" Right Intake Hale Manual Valve | $1,351 |
| 4440-0029 | 3" Right Intake Hale Manual Valve | $2,393 |
| 4440-0030 | 2.5" Side Suction Top Mount Control Handle Hale Manual Valve Location: [#LOC] | $1,714 |
| 4440-0031 | 3" Left Intake Hale Manual Valve | $1,877 |
| 4440-0033 | 2.5" Left Rear Intake Hale Manual Valve. (With rear discahrge location to be outside or below). | $1,975 |
| 4440-0034 | 2.5" Right Rear Intake Hale Manual Valve | $1,476 |
| 4440-0035 | 3" Right Rear Intake Hale Manual Valve | $2,379 |
| 4440-0036 | 2.5" left intake Elkhart manual valve. | $1,282 |

| Item No. | Description | |
|---|---|---|
| 4440-0037 | 3" Left Intake Elkhart Manual Valve | $2,074 |
| 4440-0038 | 2.5" Left Rear Intake Elkhart Manual Valve. (With rear discahrge location to be outside or below). | $1,971 |
| 4440-0039 | 2.5" Side Suction Top Mount Control Handle Elkhart Manual Valve. Location: [#LOC]. | $1,645 |
| 4440-0040 | 2.5" Right Intake Elkhart Manual Valve | $1,282 |
| 4440-0041 | 3" Right Intake Elkhart Manual Valve | $2,118 |
| 4440-0042 | 2.5" Right Rear Intake Elkhart Manual Valve | $1,471 |
| 4440-0043 | 3" Right Rear Intake Elkhart Manual Valve. (With rear discahrge location to be outside or below). | $2,394 |
| 4440-0044 | 5" Left Rear Intake w/5" Air Actuated Valve and Relief. Requires air actuated tank to pump with side mount pump module configuration. | $4,950 |
| 4440-0045 | 4" Left Rear Intake Akron Electric Valve w/Intake Relief Valve. | $5,305 |
| 4440-0046 | 4" Right Rear Intake Akron Electric Valve w/Intake Relief Valve. | $5,305 |
| 4440-0047 | 4" Left Rear Intake Elkhart Electric Valve w/Intake Relief Valve | $5,710 |
| 4440-0048 | 5" Right Rear Intake Elkhart Electric Valve w/Intake Relief Valve | $6,355 |
| 4440-0049 | 3" Left Rear Intake Akron Manual Valve. (With rear discahrge location to be outside or below). | $2,532 |
| 4440-0050 | 3" Left Rear Intake Hale Manual Valve. (With rear discahrge location to be outside or below). | $2,732 |
| 4440-0051 | 3" Left Rear Intake Elkhart Manual Valve. (With rear discahrge location to be outside or below). | $2,749 |
| 4440-0053 | 4" Left Rear Intake Hale Electric Valve w/Intake Relief Valve | $6,345 |
| 4440-0054 | 4" Right Rear Intake Hale Electric Valve w/Intake Relief Valve | $6,345 |
| 4440-0055 | 3" Side Suction Top Mount Control Handle Akron Manual Valve. Location: [#LOC]. | $2,151 |
| 4440-0056 | 3" Side Suction Top Mount Control Handle Hale Manual Valve Location: [#LOC] | $2,354 |
| 4440-0057 | 3" Side Suction Top Mount Control Handle Elkhart Manual Valve Location: [#LOC] | $2,369 |
| 4440-0058 | 5" Right Rear Intake w/5" Electric Actuated Valve and Relief. | $6,355 |
| 4440-0061 | 5" front intake w/5" Akron electric actuated valve and relief. | $7,082 |
| 4440-0062 | 5" Front Intake w/5" Elkhart Electric Actuated Valve and Relief. | $7,085 |
| 4440-0063 | Intake 6" Elkhart Elk-O-Lite 9786 Piston Valve. Ship Loose. | $2,123 |
| 4440-0064 | 2.5" Left Intake w/3" Akron Manual Valve | $1,723 |
| 4440-0065 | 2.5" Left Intake w/3" Hale Manual Valve | $1,925 |
| 4440-0066 | 2.5" Left Intake w/3" Elkhart Manual Valve | $1,941 |
| 4440-0067 | 2.5" Right Intake w/3" Akron Manual Valve | $1,723 |
| 4440-0068 | 2.5" Right Intake w/3" Hale Manual Valve | $1,925 |
| 4440-0069 | 2.5" Right Intake w/3" Elkhart Manual Valve | $1,941 |
| 4440-0070 | 2.5" Side Suction Top Mount Control Handle w/3" Akron Manual Valve Location: [#LOC] | $2,091 |
| 4440-0071 | 2.5" Side Suction Top Mount Control Handle w/3" Hale Manual Valve Location: [#LOC] | $2,293 |
| 4440-0072 | 2.5" Side Suction Top Mount Control Handle w/3" Elkhart Manual Valve Location: [#LOC] | $2,307 |
| 4440-0073 | The driver and officer side aux. intakes. Includes 3" valve and 2.5" connection on panel. | $2,589 |
| 4440-0074 | 5" Front Intake without Valve Low "S" in Tray | $3,493 |
| 4440-0075 | 5" Front Intake w/5" Air Actuated Valve and Relief Low "S" in Bumper Tray. | $5,563 |
| 4440-0076 | 4" Front intake w/4" Akron electric valve and relief. | $6,315 |
| 4440-0077 | 2.5" Side Intake Operator Control Akron Elec Valve Drivers side. | $2,996 |
| 4440-0078 | 2.5" Left Intake Elkhart Unibody TM Control Manual Valve | $1,397 |
| 4440-0079 | 3" Side Suction Top Mount Control Handle Elkhart Manual Unibody Valve Location: [#LOC] | $2,157 |
| 4440-0080 | Front Intake Left and Right Pump 6" Inlet and 2.5 Left Direct Tank Fill Shall be "T" together with spring check valves and plumb into the FRC auto tank fill. | $3,458 |
| 4440-0081 | 2.5" side suction air control Akron valve Drivers side. | $1,155 |
| 4440-0082 | 2.5" Left Intake Akron Manual Valve With Integral 30 Degree Droop | $1,201 |
| 4440-0083 | 2.5" Right Intake Akron Manual Valve With Integral 30 Degree Droop | $1,201 |
| 4440-0084 | 5" Front Intake w/5" Manual Gear Actuated Valve and Relief | $6,636 |
| 4440-0086 | 2.5" Side Intake Operator Control Akron Elec Valve Officer side. | $2,996 |
| 4440-0087 | 2.5" Intake with Akron electric valve. Controller to be located at pump operator panel. Locate intake [#LOC]. | $3,011 |
| 4440-0088 | 2.5" Intake with Hale electric valve. Controller to be located at pump operator panel. Locate intake [#LOC]. | $3,011 |
| 4440-0089 | 5" Front Intake w/5" Electric Actuated Valve and Relief Low "S" in Bumper Tray | $6,990 |
| 4440-0090 | 2.5" Side Suction Air Act Akron Valve Locate Rear of Steamer. | $1,650 |
| 4440-0091 | 2.5" Side Suction Top Mount Control Handle w/3" Elkhart Unibody Manual Valve Location: [#LOC] | $2,190 |
| 4440-0092 | 3" Left Intake Elkhart Unibody Manual Valve | $1,850 |
| 4440-0093 | 3" Right Intake Elkhart Unibody Manual Valve | $1,892 |
| 4440-0094 | 2.5" Left Intake Elkhart Unibody Manual Valve w/chrom valve face. | $1,128 |
| 4440-0095 | 2.5" Right Intake Elkhart Unibody Manual Valve w/chrome valve face. | $1,128 |
| 4440-0096 | 5" Front Intake w/4" Hale Electric Actuated Valve and Relief Low "S" in Bumper Tray | $6,966 |
| 4440-0097 | 2.5" Right Intake Elkhart Unibody Manual Valve | $1,128 |
| 4440-0098 | 5" Front Intake w/5" Akron Electric Actuated Valve and Relief | $7,082 |
| 4440-0099 | 2.5" Intake with Akron electric valve. Controller to be located at pump operator panel. Locate intake [#LOC]. | $3,011 |
| 4440-0101 | 3.0" Side Intake Operator Control Akron Elec Valve Officer side. | $3,454 |
| 4440-0102 | 3" Left Rear Intake Akron Electric Valve w/Intake Relief Valve | $3,565 |

| Item No. | Description | |
|---|---|---|
| 4440-0103 | 5" Front Intake w/5" Elect. Actuated Valve and Relief Plumbed Through Front Bumper. | $7,082 |
| 4440-0104 | 3.0" Side Intake Operator Control Akron Electric Valve Driver side. | $3,454 |
| 4440-0105 | 2.5" Intake Akron Manual Valve for Rear Mount Location: [#LOC] | $1,332 |
| 4440-0106 | 2.5" Intake Akron Electric Valve for Rear Mount Location: [#LOC] | $3,219 |
| 4440-0107 | 2.5" Side Suction Top Mount Control Handle Elkhart Manual Unibody Valve Location: [#LOC] | $1,480 |
| 4440-0111 | Officer side 5" rear intake (No Valve). Intake to run under officer side of tank and then angle into B1. In B1 the intake needs to angle downward to above floor mounted reel. Support brackets will be provided as required and to engineering requirements. To include any additional primer valves as required. | $4,393 |
| 4440-0112 | 2.5" Intake with Elkhart Unibody electric valve. Controller to be located at pump operator panel. Locate intake [#LOC]. | $3,011 |
| 4440-0113 | 2.5" Intake Elkhart Unibody Manual Valve for Rear Mount Location: [#LOC] | $1,332 |
| 4440-0126 | Akron 2.5" foam system intake with swing handle. For use with Williams Advent or Hot Shot 150 foam system. Locate to [#LOC]. | $1,128 |
| 4440-0129 | Elkhart 3" foam system intake with swing handle. For use with Hot Shot 300 foam system. Locate to [#LOC]. | $1,913 |
| 4440-0130 | 2.5" Right Intake w/3" Akron Manual Valve. Location: (REAR OF STREAM) | $1,723 |
| 4440-0131 | 2.5" Right Side intake Akron manual valve. Locate valve down low and the handle to be horizontally. | $1,299 |
| 4440-0133 | 3" Intake with Akron electric valve. Controller to be located at pump operator panel. Locate intake [#LOC]. | $3,454 |
| 4440-0134 | 3" Intake with Elkhart Unibody electric valve. Controller to be located at pump operator panel. Locate intake [#LOC]. | $3,454 |
| 4440-0137 | 2.5" side suction top mount control handle Akron manual valve with chrome plated end. Location: [#LOC]. | $1,546 |
| 4440-0138 | 2.5" right intake Akron manual valve with chrome plated end. | $1,177 |
| 4440-0139 | 2.5" Intake Akron Manual Valve for Rear Mount Location: officer side rear intake with Integral 30 Degree Droop | $1,391 |
| 4440-0140 | 2.5" right intake Akron manual valve located rear of steamer IPO standard location. | $1,128 |
| 4440-0141 | 5" Front Intake w/5" Air Actuated Valve and Relief. A three position air control switch will be located adjacent to the front suction on top of gravel shield inboard of front suction swivel. | $5,656 |
| 4440-0142 | 5" Left Rear Intake w/5" Air Actuated Valve and Relief. Does not include cap. | $4,799 |
| 4440-0143 | 2.5" Intake with Akron Electric Valve & Navigator Pro 9323 Controller with 30degree droop. Controller locates on pump operator panel. Locate intake [#LOC]. | $2,935 |
| 4440-0144 | 5" Right Rear Intake w/5" Manual Hand Wheel Actuated Valve and Relief. | $6,258 |
| 4440-0146 | Aux 2.5" foam system intake with swing handle. Locate to be [#LOC]. | $1,128 |
| 4440-0147 | 2.5" Left Intake Akron Manual Valve With Integral 30 Degree Chrome Droop. | $1,394 |
| 4440-0148 | 2.5" Right Intake Akron Manual Valve With Integral 30 Degree Chrome Droop. | $1,394 |
| 4440-0149 | 2.5" Side Intake Top Mount Control Handle Akron manual valve. With Integral 30 Degree Chrome Droop. Location: [#LOC]. | $1,762 |
| 4440-0150 | 2.5" Side Intake Top Mount Contro Handlel Akron manual valve. With Integral 30 Degree Droop.. Location: [#LOC]. | $1,569 |
| 4440-0151 | 2.5" Side Suction Top Mount Control Handle Elkhart Manual Unibody Valve W/30 degree Chrome Droop. Location: [#LOC] | $1,746 |
| 4440-0152 | 2.5" Left Intake Elkhart Unibody Manual Valve w/30 degree Chrome Droop. | $1,394 |
| 4440-0153 | 2.5" Right Intake Elkhart Unibody Manual Valve w/30 degree Chrome Droop. | $1,394 |
| 4440-0155 | 2.5" Left Rear Intake Akron Manual Valve. Top Mount control. | $2,043 |
| 4440-0158 | 4" Right Rear Intake Akron Electric Valve include 9323 controller w/Intake Relief Valve. | $5,304 |
| 4440-0159 | 5" front intake w/5" Akron electric actuated valve and relief with 9323 valve controller. | $7,082 |
| 4440-0160 | 5" Front Intake w/5" Electric Akron Valve with 9323 controller and Relief Low "S" in Bumper Tray | $6,990 |
| 4440-0163 | 5" Front Intake w/5" Elect. Actuated Valve and Relief Plumbed Under Front Bumper. With 6" adapter. | $7,185 |
| 4440-0164 | 5" Front Intake w/5" Elect. Akron Valve 9323 controller and Relief Plumbed Through Front Bumper. | $7,185 |
| 4440-0165 | 4" Right Rear Intake w/4" Air Actuated Valve and Relief. | $4,352 |
| 4440-0166 | 4" Right Rear Intake w/4" Air Actuated Valve and Relief. | $4,555 |
| 4440-0167 | 5" Front intake w/5" hand wheel actuated valve and relief. | $6,489 |
| 4440-0168 | 6" Right Rear Intake w/6" Air Actuated Valve and Relief. | $5,453 |
| 4440-0169 | 2.5" Intake with 3" Akron electric valve WITH 9323 controller. Controller to be located at pump operator panel. Locate intake valve: Locate intake [#LOC]. | $3,454 |
| 4440-0170 | 4" Right rear intake no valve. | $2,738 |
| 4440-0171 | 5" Left Rear Intake w/5" Electric Valve with 9323 controller and Relief. | $6,212 |
| 4440-0172 | 5" Front Intake w/5" Jamesbury Valve Hand Wheel Actuated and Relief. "Low S" | $6,766 |
| 4445-0004 | Front intake swivel 5" polished chrome. | $2,131 |
| 4445-0005 | Front intake swivel 6" polished chrome. | $2,217 |
| 4445-0006 | Intake Adapter 5" FNPT x 4.5" MNST for Front Intake | $434 |

| Item No. | Description | |
|---|---|---|
| 4445-0007 | Intake adapter 5" FNPT x 6" MNST for front intake. | $535 |
| 4445-0008 | Intake Relief Valve - Elkhart. | $639 |
| 4445-0009 | Intake relief valve Akron. | $469 |
| 4445-0011 | Valve Relief Intake - Ross 2.5" | $1,932 |
| 4445-0013 | 2.5" Check Valve for [#LOC] intake. | $404 |
| 4445-0014 | 3" Check Valve for [#LOC] Intake | $690 |
| 4445-0015 | 6" Check Valve for [#LOC] Steamer | $673 |
| 4445-0016 | Intake relief valve Hale 2.5". | $645 |
| 4445-0018 | Intake relief valve outlet to be extended to the side of the truck under the running board. Includes tag that reads "Intake Pressure Relief Outlet - Do Not Cap". | $291 |
| 4445-0019 | Intake Adapter 5" FNST x 4.5" MNST for Front Intake | $434 |
| 4445-0020 | Intake Adapter 5" FNST x 6" MNST for Front Intake | $535 |
| 4445-0021 | Intake Adapter 5" FNPT x 4.5" MNST for Rear Intake | $434 |
| 4445-0022 | Intake adapter 5" FNPT x 6" MNST for rear intake. | $535 |
| 4445-0023 | Recessed front suction intake swivel in bumper 3" in tray. | $982 |
| 4445-0024 | Intake adapter 5" FNPT x 5" MNST for front intake. | $398 |
| 4445-0025 | Intake Adapter 5" FNPT x 5" MNST for Rear Intake. | $398 |
| 4445-0026 | Front Intake Swivel 4" Polished Chrome | $1,279 |
| 4445-0027 | Intake Adapter 4" FNPT x 4" MNST for Rear Intake. | $383 |
| 4445-0028 | Intake bleeder/drain valve to be extended to the side of the truck. | $60 |
| 4445-0030 | Intake Adapter 5" FNST x 4" MNST with LH 4" cap for Front Rear or Side Intake. | $434 |
| 4445-0032 | Front Intake Swivel 5" Painted Job Color | $120 |
| 4445-0035 | Front Intake Swivel 6" Painted Job Color | $2,217 |
| 4445-0037 | Auto Tank Fill Valve Plumbing "T" into Right MIV'S/Rear Intake with check valves. | $668 |
| 4445-0038 | Waterous Intake Pressure Relief Valve. | $1,476 |
| 4445-0039 | Intake Adapter 2-1/2"MNST X 3" FNST Swivels with plug. | $246 |
| 4445-0041 | Front/Rear Intake Drain Valves to be located inside of the heat pan. Valves to be a 3/4" bleeder valve with 1/4 turn control located under officer side running board. | $164 |
| 4445-0042 | Storz Connector 4"FNPT x 4" Storz 30Deg Elbow with Tethered Cap For rear intake. | $348 |
| 4445-0048 | Intake pressure relief valve Task Force Tips. | $452 |
| 4445-0049 | Intake relief valve outlet to be extended to the side of the truck under the front body compartment. Includes tag that reads "Intake Pressure Relief Outlet - Do Not Cap". | $291 |
| 4445-0050 | Intake adapter 5" FNPT x 6" MNST for rear intake. | $535 |
| 4445-0052 | Recessed front suction intake swivel in bumper 3" in tray using aluminum smooth plate with black Scorpion coating (IPOS diamond plate). | $1,064 |
| 4445-0054 | Intake Adapter 5" FNPT x 4" MNST for Front Rear or Side Intake with 4" Cap. | $434 |
| 4445-0055 | Intake adapter 5" FNPT x 5" MNST for front intake.The 5" front intake adapter shall be mounted so the threads approximately 2" from the bumper (Flush+2). | $398 |
| 4445-0056 | Storz Connector 5" FNPT x 4" Storz 30 Degree Elbow with Tethered Cap For Rear Intake. | $453 |
| 4445-0058 | 5" Check Valve shall be install in front intake to prevent back flow. | $1,115 |
| 4445-0059 | Manual override access door to be on officer's side pump panel to access the override on the front intake electric valve. | $86 |
| 4445-0060 | Front intake bleeder valve to be located adjacent to inlet at front bumper. | $91 |
| 4445-0062 | 2.5" Left Aux Intake shall be as located approximately 6" below main pump inlet offset to rear. | $360 |
| 4445-0063 | Storz Connector 5"FNPT x 5" Storz with Tethered Cap for front intake. | $372 |
| 4445-0067 | Manual override access hole to be supplied in rear pump panel to access the override on the 4" tank to pump .Wrench required for manual override shall be located in vicinity of rear access panel. | $86 |
| 4445-0068 | Storz Connector 5"FNPT x 5" Storz with Tethered Cap For front/rear intake. | $372 |
| 4445-0069 | Intake Adapter 5" FNPT x 4.547 PHOENIX 6 TPI with cap for Front or rear intake. | $644 |
| 4445-0070 | Waterous Intake Pressure Relief Valve controls for pump and intakes to be located behind officer side pump panel. | $99 |
| 4445-0071 | Front Intake Swivel 5" Painted Job Color | $2,130 |
| 4445-0072 | Intake adapter 5" FNPT x 6" MNST for rear intake with rocker lug cap. | $534 |
| 4445-0074 | 2.5" Aux Intake shall be as located approximately 12" awayfrom main pump inlet offset to rear. | $360 |
| 4445-0075 | Manual override knob on officer's side pump panel for front intake electric valve. | $336 |
| 4445-0079 | Intake Adapter 4" FNPT x 5" MNST with cap for Rear Intake | $434 |
| 4445-0080 | Intake pressure relief valve Trident Air Max with adjustment knob and pressure gauge. | $1,417 |
| 4450-0007 | 1" Tank Fill Akron Manual Valve | $410 |
| 4450-0008 | 1.5" tank fill Akron manual valve. | $933 |
| 4450-0009 | 1.5" Tank Fill Hale Manual Valve | $1,080 |
| 4450-0010 | 2" tank fill Akron manual valve. | $1,120 |
| 4450-0011 | 2.5" tank fill Akron manual valve. At pump panel. | $1,200 |
| 4450-0012 | 1.5" tank drain Akron manual valve. | $817 |
| 4450-0014 | Direct 2.5" water tank fill with Akron valve. Location: [#LOC]. | $1,358 |
| 4450-0020 | 2.5" rear direct tank fill. Location: [#LOC]. | $1,356 |

| Item No. | Description | |
|---|---|---|
| 4450-0021 | 3" Dual Tank to Pump Akron Manual Valves - Side Panel Controlled | $1,596 |
| 4450-0022 | 3" tank to pump Akron manual valve. | $1,180 |
| 4450-0023 | 3" Tank to Pump Akron Air Actuated Valve | $1,653 |
| 4450-0025 | 4" Tank to Pump Akron Electric Valve for Rear Mount | $4,291 |
| 4450-0026 | 5" Rear Jet Dump No Valve. Include 1-1/2" inline valve and high pressure hydraulic hose connected to the 1-1/2" internal tank piping which runs to the rear of the booster tank. | $2,268 |
| 4450-0027 | 5" Rear Jet Dump w/5" Manual Butterfly Valve. | $3,526 |
| 4450-0028 | Newton Dump with Manually Operated Valve. | $2,027 |
| 4450-0029 | Newton Dump Extension. For use with a manually operated Newton Dump. | $1,003 |
| 4450-0030 | Newton Directional Chute. Includes chute support bracket and support bolts mounted each side on trailing edge of body/beavertails. | $1,630 |
| 4450-0031 | Electric actuated dump valve includes 18" electric telescopic extension and switch. | $5,483 |
| 4450-0032 | 2" Tank Fill Akron Electric Valve | $2,760 |
| 4450-0034 | 2.5" Tank Fill "AutoFill" Automatic Tank Fill Valve. Location: [#LOC]. Requires Class 1 tank gauge. | $7,945 |
| 4450-0035 | 2.5" Direct Tank Fill Location: [#LOC] | $1,246 |
| 4450-0037 | 4" Tank To Pump Akron Air Valve for Rear Mount | $3,702 |
| 4450-0038 | Hale 4" Air Tank to Pump for CAFSPRO Foam System. | $4,467 |
| 4450-0054 | 2.5" Tank Fill Hale Manual Valve | $1,577 |
| 4450-0055 | Hale 4" Manual Tank-to-pump | $3,372 |
| 4450-0056 | 3" Air Tank to Pump for Cafspro Foam System with4" plumbing. | $2,312 |
| 4450-0057 | 3" Tank to Pump Hale Manual Valve | $1,345 |
| 4450-0058 | 2.0" Tank Fill Hale Manual Valve | $1,283 |
| 4450-0059 | 1.5" Tank Fill Elkhart Manual Valve | $1,014 |
| 4450-0060 | 2" Tank Fill Elkhart Manual Valve | $1,202 |
| 4450-0061 | 2.5" Tank Fill Elkhart Manual Valve | $1,351 |
| 4450-0062 | 3" Tank to Pump Elkhart Manual Valve | $1,406 |
| 4450-0063 | Direct 2.5" Water Tank Fill with Hale Valve. Location: [#LOC] | $1,514 |
| 4450-0064 | Direct 2.5" Water Tank Fill with Elkhart Valve. Location: [#LOC] | $1,509 |
| 4450-0065 | Direct 3" Water Tank Fill. Location: [#LOC]. | $1,591 |
| 4450-0066 | Tank-to-pump 4" Akron Air Valve. | $3,595 |
| 4450-0067 | Tank-to-pump 4" Akron electric valve. | $3,676 |
| 4450-0068 | 3" Tank to Pump w/3.5" Waterous Valve | $1,803 |
| 4450-0070 | 2.5" Tank Fill Hale Electric Valve | $2,824 |
| 4450-0071 | Tank-to-pump 4" Hale Electric Valve | $4,633 |
| 4450-0072 | 2.5" Direct Fill Line into the tank Akron electric valve. Location: [#LOC]. | $3,276 |
| 4450-0073 | 3" Tank to Pump w/3.5" Waterous Electric Valve | $3,484 |
| 4450-0074 | 2" Tank Fill Akron Valve Handwheel Control | $2,175 |
| 4450-0075 | 2" Tank Fill Elkhart Valve Handwheel | $2,228 |
| 4450-0076 | 2.5" Tank Fill Akron Valve Handwheel Control | $2,254 |
| 4450-0077 | 2.5" Tank Fill Elkhart Valve Handwheel Control | $2,304 |
| 4450-0078 | 3" Dual Tank to Pump Akron Air Valves. | $2,627 |
| 4450-0080 | 3" Tank to Pump Akron Manual Valve two (2) independent Top mount controls | $1,596 |
| 4450-0082 | 1.5" Tank Drain Hale Manual Valve | $921 |
| 4450-0083 | 1.5" Tank Drain Elkhart Manual Valve | $898 |
| 4450-0084 | Auto Tank Fill Valve Plumbing "T" into Left and Right Fill Thieft with check valves. | $1,458 |
| 4450-0085 | 3" Tank to Pump Elkhart Unibody Manual Valve | $1,496 |
| 4450-0086 | 2" Tank Fill Elkhart Unibody Manual Valve | $1,205 |
| 4450-0088 | 2" Tank Fill Elkhart Unibody Electric Valve | $2,551 |
| 4450-0090 | 1.5" Direct Tank Fill Elkhart Unibody Manual Valve Left Side Panel | $1,119 |
| 4450-0091 | 2.5" Direct Tank Fill "AutoFill" Automatic Tank Fill Valve. Location: [#LOC]. | $4,496 |
| 4450-0092 | 3" Tank to Pump Akron Valve Hand Wheel Control. | $2,435 |
| 4450-0093 | Tank-to-pump 3" Akron Electric Valve | $3,432 |
| 4450-0095 | 2" Tank Fill Hale Electric Valve | $2,760 |
| 4450-0096 | Electric 3" Akron tank to pump. Controller located on pump control panel. | $3,310 |
| 4450-0097 | Electric 3" Hale tank to pump. Controller located on pump control panel. | $3,310 |
| 4450-0098 | 2.5" Tank Fill Akron Electric Valve with 9323 controller. | $2,920 |
| 4450-0099 | 3" Tank to Pump Elkhart Unibody Air Actuated Valve | $1,664 |
| 4450-0100 | Direct Rear 2.5" Water Tank Fill [#LOC] with 2.5"Check Stainless steel Technocheck Valve. | $1,115 |
| 4450-0101 | Newton Dump with electrically actuated valve and manually actuated chute. Electric dump valve control to be located to the driver side rear within reach from the ground. | $4,961 |
| 4450-0102 | Direct 1" Water Tank Fill Plumb to the fill Tower and Terminate with .75 Female Hose Bib. Location: driver side pump panel. | $525 |
| 4450-0103 | Direct Rear 2.5" Water Tank Fill with 2.5"Check Stainless steel Technocheck Valve. Location: [#LOC] | $1,115 |
| 4450-0104 | 6" Rear Gravity Dump No Valve | $2,617 |
| 4450-0105 | 3" Tank Fill Akron Manual Valve | $1,577 |

| Item No. | Description | |
|---|---|---|
| 4450-0106 | 6" Rear Jet Dump w/6" Electric/Air Butterfly Valve with Control Switchs in Cab and Pump operator panel side Rear. | $3,747 |
| 4450-0107 | Direct 2.5" water tank fill with 3" Elkhart manual valve. Location: [#LOC]. | $1,740 |
| 4450-0108 | 2" tank fill Akron 9313 electric valve. | $2,760 |
| 4450-0110 | Tank-to-pump 4" Akron electric valve. | $3,676 |
| 4450-0111 | 4" Tank to Pump Akron Electric Valve for Rear Mount | $4,291 |
| 4450-0112 | Electric 3" Akron tank to pump. Controller located on pump control panel. Include 9323 controller. | $3,310 |
| 4450-0113 | 5" Rear Jet Dump (No valve). For use with a center slam strip rear end. | $2,047 |
| 4450-0114 | 3" Tank to Pump Electric Over Air Actuated Valve. (For Pump&Roll Operation) | $1,752 |
| 4450-0116 | 2.5" Tank Fill Elkhart Unibody Manual Valve | $1,351 |
| 4450-0117 | Tank-to-pump 4" Elkhart Unibody Electric Valve | $3,676 |
| 4450-0118 | Direct 2.5" Water Tank Fill with Elkhart Unibody Valve. Location: [#LOC] | $1,509 |
| 4450-0119 | 3" tank to pump Akron manual valve w/4" tank connection. | $1,203 |
| 4450-0120 | 2.5" Rear Tank Inlet. Includes Water Level Gauge Located in B1 Compartment | $1,454 |
| 4450-0121 | 3" Tank to pump Akron air actuated valve w/4" tank connection. | $1,653 |
| 4450-0122 | 3" Tank To Pump Akron Electric Actuated Valve w/4" Plumbing. Include 9323 controller. | $3,392 |
| 4450-0123 | Direct 3" Tank Fill Akron Electric Valve with control at pump operator panel valve Location: [#LOC] | $3,310 |
| 4450-0124 | 3" Tank To Pump Elkhart Unibody Manual Valve w/4" Plumbing. | $1,262 |
| 4450-0125 | 3" Tank To Pump Elkhart Unibody Air Actuated Valve w/4" Plumbing | $1,746 |
| 4450-0126 | Newton Dump with Manually Operated Valve. Model 1060 with 6" Extendable Handle. | $2,031 |
| 4450-0127 | 2.5" Tank Fill "AutoFill" Automatic Tank Fill Valve with IntelliTank level gauge located behind officer side pump panel. Location: [#LOC]. | $7,945 |
| 4450-0131 | 2.5" Tank Fill Elkhart Unibody Electric Valve | $3,047 |
| 4450-0132 | 3" Tank To Pump Elkhart Unibody Electric Actuated Valve w/4" Plumbing | $3,408 |
| 4450-0133 | 3" Tank To Pump Akron air actuated valve w/4" plumbing from the tank to the valve or check. | $1,653 |
| 4450-0134 | 3" Tank To Pump Akron Manual Valve w/ Trident Hand Wheel Control and 4" tank connection. | $2,964 |
| 4450-0135 | 4" tank to pump with Akron air actuated valve. For use with rear mount pump. | $2,850 |
| 4450-0136 | 4" tank to pump with Elkhart air actuated unibody valve. For use with rear mount pump. | $2,850 |
| 4450-0137 | 4" tank to pump with Akron electric valve. For use with rear mount pump. | $3,262 |
| 4450-0138 | 4" tank to pump with Elkhart unibody electric valve. For use with rear mount pump. | $3,262 |
| 4450-0139 | 2" tank fill with Akron manual valve. For use with rear mount pump. | $1,059 |
| 4450-0140 | 2" tank fill with Akron electric valve. For use with rear mount pump. | $2,548 |
| 4450-0141 | 2" tank fill with Elkhart unibody manual valve. For use with rear mount pump. | $1,059 |
| 4450-0142 | 2" tank fill with Elkhart unibody electricl valve. | $2,548 |
| 4450-0145 | Direct 2.5" Tank Fill Elkhart Unibody Electric Valve w/30 degree droop adapter with swivel/plug and control at pump operator panel. Location: driver side rear B1 compartment. | $3,276 |
| 4450-0146 | Tank-to-pump 3" Elkhart Unibody Electric Valve | $3,064 |
| 4450-0148 | 4" rear direct tank fill. Includes handwheel control swivel with droop with cap and retainer. Located to [#LOC] of the rear body. | $2,580 |
| 4450-0149 | 2.5" rear direct tank fill. Includes swing handle control swivel with droop and cap with retainer. Located to [#LOC] of the rear body. | $1,251 |
| 4450-0156 | 3.0" Tank Drain Akron Air Actuated Valve. | $1,653 |
| 4450-0158 | Rear tank dump. Includes stainless finish steel assembly with electrically actuated valve. For use with slip on extension and chute. Includes Slip-on stainless steel dump extension and chute with beavertail mounted removable support arm bracket and tailboard mounted storage tray (officer side) with retaining straps. | $5,483 |
| 4450-0160 | Bush Pack 1" Fill with 1" Cam-Lock fitting located on pump operator pump panel. Include a 3' length of 1" clear hose. | $417 |
| 4450-0161 | Direct .75" Water Tank Fill Plumbing to Terminate with .75 Female Hose Bib.Location: [#LOC] | $525 |
| 4450-0162 | Direct 2.5" water tank fill with Akron valve. Location: Driver side rear of steamer Top Mount Control. | $1,502 |
| 4450-0163 | Direct 3" water tank fill. Location: Driver side pump panel. | $1,591 |
| 4450-0164 | Direct 2.5" Tank Fill Akron Electric Valve with Dual Control (1) control at the valve and (1) at the pump operator panel. Valve location officer side rear. | $3,947 |
| 4450-0166 | Additional 3" Tank To Pump Akron Manual Valve w/4" plumbing. Shall include internal plumbing to the rear of the tank into the rear sump on officer side. | $2,172 |
| 4450-0169 | 4" rear direct tank fill. Includes handwheel control with 5" Swivel Storz elbow and cap. Located to [#LOC] off rear of body | $3,041 |
| 4450-0170 | Rear tank dump. Includes stainless finish steel assembly with electrically actuated valve. For use with slip on extension and chute. Includes beavertail mounted removable support arm bracket. Slip-on stainless steel dump extension with tailboard mounted storage tray (officer side) with retaining straps and chute mounted in B1 compartment above the dump. | $5,483 |
| 4450-0171 | 2.5" rear direct tank fill. The 2.5" direct water tank fill connection shall include an inlet strainer a 2.5" FNST chrome inlet swivel w/double male nst adapter and a chrome cap with cable. [#LOC] of the rear body. | $1,251 |

| Item No. | Description | |
|---|---|---|
| 4450-0172 | 4" Direct Tank Inlet/Outlet w/4" Elect Valve. Include 4" plumbing strainer and terminate with 4"FNST X 5" storz adapter w/cap. Location at left side pump panel. | $4,291 |
| 4450-0174 | 2.5" Direct Tank Fill Akron Electric Valve with Dual Control (1) control at the valve and (1) at the pump operator panel. Valve location officer side rear. | $4,189 |
| 4450-0175 | 4" rear direct tank fill. Includes electric dual control (1)operator panel (1) at valve with 4" Swivel Storz elbow and cap. Located to (1) left and (1) right side off the rear body | $3,897 |
| 4450-0176 | 3" Tank to Pump Electric Over Air Actuated Valve w/4" Plumbing.. Include (1) control in cab and (1) control pump operator panel). | $1,751 |
| 4450-0181 | Hose bib female direct tank inlet 3/4" with valve. Location Officer side pump panel. | $313 |
| 4450-0182 | Rear tank dump. Includes stainless finish steel assembly with air actuated valve on top of dump assembly. Includes integral swivel chute with manual extension. | $6,159 |
| 4450-0183 | 4" rear direct tank fill. Includes handwheel control with cap and retainer. Valve to be Located on rear tailboard officer side. Include stainless steel plumbing from the top of the tank to tailboard. A 2.5" Direct inlet shall be"T" into the 4" piping up high. | $4,377 |
| 4450-0184 | Hose bib female direct tank inlet 3/4" with valve. Location Driver side pump panel. | $313 |
| 4450-0185 | 3" Tank to Pump Electric Over Air Actuated Valve. (For Pump&Roll Operation) | $1,751 |
| 4450-0186 | 2.5" Tank Fill "AutoFill" Automatic Tank Fill Valve. Location: [#LOC]. | $8,148 |
| 4450-0188 | Rear tank dump. Includes painted steel assembly with manually actuated valve on top of dump assembly. Includes integral 6012 series swivel chute with manual telescopic extension and with locking system. | $3,836 |
| 4450-0190 | Rear tank dump. Includes painted steel assembly with electric actuated valve on top of dump assembly. Includes integral swivel chute with manual telescopic extension and locking system.. | $5,402 |
| 4450-0192 | Rear tank dump. Includes stainless steel assembly with electrically actuated 1070 dump valve. Includes integral swivel chute with manual extension. | $6,999 |
| 4450-0193 | Driver and officer side tank dumps. Includes stainless steel assembly with electrically actuated valve. For use with flip chute. | $4,986 |
| 4450-0195 | Rear tank dump. Includes stainless steel assembly with manually actuated valve on top of dump assembly with quick release pin to allow for folding down handle. Includes integral swivel chute with manual extension. | $5,004 |
| 4450-0196 | Slip-on stainless steel dump extension chute. | $865 |
| 4450-0197 | 6" Rear Jet Dump 36" Extension Chute w/6" Female Cam Lock. | $916 |
| 4450-0199 | Reverse push/pull handle on 3" tank to pump Akron manual valve. The "in" position will be open and the "out" position will be closed. | $57 |
| 4450-0201 | 4" Rear Direct tank fill. Includes Fireman Friend 4" valve with 5" Storz elbow adapter and cap. Located to [#LOC] of the rear body | $2,792 |
| 4450-0202 | Rear tank dumps. Includes stainless steel assembly with electrically actuated valve with flip chute. | $3,850 |
| 4450-0205 | Direct 4" Tank Fill Akron Electric Valve with Dual Control (1) control at the valve and (1) at the pump operator panel. Valve location [#LOC]. | $4,610 |
| 4450-0206 | 4" rear direct tank fill. Includes handwheel control swivel with droop with cap and retainer. Include 3/4" bleeder. Located to [#LOC] of the rear body. | $2,548 |
| 4450-0207 | 2" Tank to Pump Electric Over Air Actuated Valve. (For Pump&Roll Operation) | $1,243 |
| 4450-0208 | Rear Tank Inlet 3". Includes Water Level Gauge Located in B1 Compartment. | $1,824 |
| 4450-0210 | 2" tank fill Akron electric valve & Navigator Pro 9323 Controller. | $2,690 |
| 4450-0211 | 2.5" Direct Tank Fill "AutoFill" Automatic Tank Fill Valve. Waterous (Auto Fill) shall be "T" into both side 6" intake front and rear 5" intake with a special manifold and check valves. | $5,550 |
| 4450-0212 | Rear tank dump. Includes steel assembly with manually actuated valve on top of dump assembly. Includes integral 6012SW swivel chute with manual telescopic extension and swivel to have seven position lock system. | $3,836 |
| 4450-0213 | Newton dump switch to have a red flip up cover (or bezel). | $54 |
| 4450-0215 | 2" tank fill Akron Electric Valve & Navigator 9325 controller. Controller only no flow or pressure reading require. | $2,716 |
| 4450-0216 | Tank-to-pump 4" Akron electric valve with Navigator 9325 Controller. Controller only no flow or pressure reading require. | $3,676 |
| 4450-0217 | 2.5" Direct foam tank fill Elkhart Unibody manual valve. Plumbing to be reduced to 2" after the valve. Location: [#LOC]. | $1,351 |
| 4450-0218 | 6" Rear Gravity Dump No Valve terminate with 6" NST and cap. | $2,723 |
| 4450-0219 | Rear tank dump. Includes painted steel assembly with manually actuated valve on top of dump assembly. Includes integral 6012SW swivel chute with manual telescopic extension and swivel to have seven position lock system. | $4,413 |
| 4450-0223 | 4" Rear Direct tank fill. Includes Fireman Friend 4" valve with 4" MNST adapter and cap. Located above lowered B1 compartment in upper smooth plate bolt on panel. | $2,792 |
| 4450-0224 | 4" tank to pump with Hale Valve air actuated unibody valve. | $3,151 |
| 4450-0226 | 4" Rear Direct tank fill w/4" check valve and pipng. Inculde a 4" MNST adapter and cap. Located officer side rear. | $2,087 |

| Item No. | Description | |
|---|---|---|
| 4450-0228 | | $5,552 |
| | Rear tank dump. Includes stainless steel assembly with manually actuated valve on top of dump assembly. Includes integral 6012 swivel chute with manual telescopic extension and with locking system. | |
| 4450-0229 | 3" Tank Fill Akron Valve Handwheel Control | $2,373 |
| 4450-0230 | 3.5" Tank To Pump Akron Manual Valve w/4" Plumbing. Piping from the tank to the valve to be 4". | $1,472 |
| 4450-0236 | 2" Tank Fill Elkhart Unibody Valve Handwheel | $2,227 |
| 4450-0237 | 3" Tank To Pump Elkhart Unibody Manual Valve w/4" Plumbing. Include manual hand wheel control. | $1,862 |
| 4450-0238 | Tank-to-pump 4" Akron electric valve with Navigator 9323 Controller. | $3,676 |
| 4450-0239 | | $1,502 |
| | Direct 2.5" water tank fill with Akron valve. Location: Officer side rear of steamerl. Control at pump operator panel. | |
| 4450-0240 | 5" Rear Jet Dump w/5" Akron Manual Butterfly Valve. Include a 5" Ames female coupler connection. | $3,897 |
| 4450-0241 | 4" rear direct tank fill. Includes handwheel control with 4" Swivel Storz elbow and cap. Located to officer's side off rear of body | $3,041 |
| 4450-0242 | | $4,936 |
| | 6" Rear Gravity Dump with 6" manual hand wheel control valve to terminate with 6" MNST connection with cap.. | |
| 4450-0243 | Direct 2.5" Water Tank Fill with Firemen Friend high flow Valve. Location: B1. | $1,560 |
| 4450-0249 | 4" rear direct tank fill. Includes handwheel controll with cap. Located to [#LOC] of the rear body. | $2,548 |
| 4450-0250 | 2.5" Direct Tank Fill "Elkhart AutoFill" UBEC1AT Automatic Tank Fill Valve. Location: off driver side MIV intake valve. | $4,804 |
| 4450-0251 | 4" Tank to Pump Akron Valve Hand Wheel Control. | $4,086 |
| 4450-0254 | Direct 2.5" Tank Fill W/2.5" Electric/Air Valve. Include 2.5" swivel/plug and control at pump operator panel. Location: Rear center body above B1. | $1,373 |
| 4450-0255 | 4" Rear Direct tank fill with bleeder. Includes Fireman Friend 4" valve with 4" Storz elbow adapter and cap. Located to officer of the rear body. | $2,894 |
| 4450-0256 | 2.5" Rear Direct tank fill. Includes Fireman Friend 3" valve with 4" body to terminate with 2.5" FNST adapter 30 degree droop and plug. Location; B1 | $1,735 |
| 4450-0257 | 1.5" Tank Drain Elkart Manual Valve with pull cable control at left pump panel. Valve shall be located at the tank sump and extend plumbing below frame rail. | $858 |
| 4450-0258 | 1.5" Tank Fill/Re-circulation line Akron manual valve. | $933 |
| 4450-0259 | 1.5" Tank Fill/Re-circulation line Elkhart manual valve. | $933 |
| 4450-0261 | 2.5" Tank Fill Waterous 2.5" Valve. | $1,472 |
| 4450-0262 | Direct 2.5" Water Tank Fill with Firemen Friend high flow Valve. Location: [#LOC]. | $1,560 |
| 4450-0263 | Rear tank dump. Includes stainless steel assembly with manual actuated valve on top of dump assembly. Includes integral manual extension chute. | $2,814 |
| 4450-0264 | Second 3" tank to pump Akron manual valve w/4" tank connection. | $1,203 |
| 4450-0266 | 5" Rear Jet Dump w/5" Elect/Air Butterfly Valve. Jet manual valve control at operator pump panel. Air actuated valve control located (1) in cab and (1) at left rear of body. | $3,910 |
| 4450-0267 | 2.5" Direct Fill Line into the tank Elkhart electric valve. Location: driver side pump panel. | $3,276 |
| 4450-0268 | | $1,449 |
| | 2.5" rear direct tank fill. The 2.5" direct water tank fill connection shall include an inlet strainer a 2.5" FNST chrome inlet swivel w/double male nst adapter and a chrome cap with cable. Valve to be Located down low (1)driver and (1)officer side rear. Fill to be piped internally to the top of the water tank to reduce head pressure during filling. | |
| 4450-0269 | 3" Dual Tank to Pump Akron Manual Valves with 4" tank connection- Side Panel Controlled. | $2,625 |
| 4450-0271 | 5" Rear Jet Dump w/5" Electric/Air Butterfly Valve to terminate w/5" Ames female coupler connection with jet Control at Pump operator panel and 5" dump valve control at left side rear. | $4,831 |
| 4450-0272 | 2.5" Direct Fill Line into the tank Elkhart electric valve. Location: driver side pump panel. | $3,276 |
| 4450-0273 | Direct 2.5" Water Tank Fill with Akron manual/Firemen Friend Valve. Location: Officer side rear below ladder tunnel. Include 2.5" stainless steel pipe and/or high pressure flexible hose from the connection to the water tank. | $2,695 |
| 4450-0275 | 16" Rear tank dump. Includes stainless steel assembly with electrically actuated valve. (NO EXTENSION) | $2,494 |
| 4455-0004 | Gasket Material around all Discharges Intakes and Handle Slots on Pump Panel to hold in heat of Module Plumbing | $993 |
| 4460-0000 | Air outlet w/snubber valve. Location: [#LOC]. | $273 |
| 4460-0001 | Air blow-out for: [#LOC]. | $256 |
| 4460-0002 | Hose reel blow-out primary. | $261 |
| 4460-0004 | All tags installed on the exterior of the apparatus shall be mechanically fastened with stainless steel screws. These include but not limited to tags installed on the pump module body cab and bumper. Pump panel tags shall be mechanically fastened regardless whether the panel is enclosed behind a door. | $1,282 |
| 4460-0005 | Fire Shop Bezel Chrome - Standard 2.5" Gauge | $40 |
| 4460-0006 | Radiator Fill Valve on Pump Panel. | $301 |
| 4460-0007 | Air outlet with snubber valve and 25' hose. Location: [#LOC]. | $306 |

| Item No. | Description | |
|---|---|---|
| 4460-0008 | Air Outlet Valve to operate off of CAFS System Compressor. Location: [#LOC]. | $376 |
| 4460-0009 | Pump panel tags special color. (Must specify.) | $323 |
| 4460-0010 | Pump panel tags - Special label. (Must specify.) | $276 |
| 4460-0011 | OK To Pump Light - Pump Panel Mounted - Green .75" Light. Located near pressure governor. | $72 |
| 4460-0013 | Air Outlet Valve. Plumbed from the reservoir tank. Includes quarter turn valve. Location: [#LOC]. | $322 |
| 4460-0014 | Check Engine and Stop Engine light mounted on pump panel. Wire lights to pump module mounted alarm. | $276 |
| 4460-0017 | Class 1 Color Coded Bezel Chrome - 2.5" Gauge. | $26 |
| 4460-0018 | Class 1 color coded bezel chrome - 3.5" gauge. | $30 |
| 4460-0021 | Diagramatic Vinyl Side Mount Pump Panel Label of the discharges & preconnects specified color coding for handles and gauges. | $1,960 |
| 4460-0022 | Stainless steel plates for all discharges and intakes behind the pump panel access doors each side. Stainless steel plates to be mounted on the valve with rubber gasket to seal opening. | $1,143 |
| 4460-0023 | Span Color Coded Bezel - 2.5" Gauge | $11 |
| 4460-0024 | Span Color Coded Bezel - 3.5" Gauge | $11 |
| 4460-0025 | Cut-out on officer side pump panel with expended metal. Cut-out to be approx. 14" wide x 6" high to provide sight to cord reel in pump house. Cut-out to be located above cord reel rollers on pump panel. | $156 |
| 4460-0026 | CAFS Air Outlet Valve Recess Driver side Pump Panel with door. | $380 |
| 4460-0027 | Diagramtic vinyl rear mount pump panel labeling of discharges and/or preconnects. Includes rear panel (with hosebed deck gun) and front discharge layouts (two (2) views- No top view). | $1,960 |
| 4460-0028 | OBSOLETE - USE 4460-0004 | $423 |
| 4460-0029 | All exterior 1x3 and .1/2x1 tags shall be Vision Mark tags. | $714 |
| 4460-0031 | Attach Escutchion Plates with Thunb Latch on Officer Side. | $188 |
| 4460-0032 | Push/Pull Rod Extrusion at pump panel to be thru bolted with nuts IPOS nut cert. | $96 |
| 4460-0033 | CAFS Air outlet .75 valve with Handle and Quick Disconnect. Location: [#LOC] | $423 |
| 4460-0035 | Diagramtic Vinyl Overlay Rear Mount Pump Panel. All Foam controls and Foam Discharges Yellow Intakes Blue Water Discharges Red and Pump and Engine Gray. | $1,960 |
| 4460-0038 | Diagramtic Vinyl Overlay Pump Operator Panel. All controls and Discharges and Intakes. | $1,960 |
| 4460-0039 | Innovative Controls Color Coded Bezel Chrome - 2.5" Gauge. | $109 |
| 4460-0040 | Discharge Escutcheon Plates NFPA Color Coded to match photos in file with vinyl overlay shall be around each discharge outlet on driver and officer pump panel. | $516 |
| 4460-0042 | Diagramtic Top Mount Pump Panel Label of the discharges & preconnects specified color coding for handles and gauges.. | $4,967 |
| 4460-0043 | Pump panel tags mechanically fastened with screws. | $423 |
| 4460-0045 | Innovative Controls Tags all plumbing and body 1x3 tags shall be Innovative Controls. To include round tag for TM controls if applicable. | $728 |
| 4460-0046 | Innovative Control Noshok 4" Master Gauge Bezel. | $118 |
| 4460-0048 | Innovative Control 7.75" Dia Pump Intake Color Code Bezel Trim Ring. | $126 |
| 4460-0049 | Innovative Control 4" Dia Pump Intake/Discharge Color Code Bezel Trim Ring. | $115 |
| 4460-0050 | Innovative Controls Foam Discharge Identifing label shall be installed in recessed areas on each foam discharge gauge bezel. | $10 |
| 4460-0051 | Speaker cut out with "E-ONE" stainless steel grille. Located pump operator panel. For dealer install speaker. | $136 |
| 4460-0059 | Class 1 color coded bezel gauge trim ring - 2.5" Gauge | $38 |
| 4460-0060 | Color coded trim rings around all inlets and outlets for both driver and officer side. The side discharge outlets shall be color coded and labeled to correspond with the discharge identification tag. | $1,327 |
| 4460-0061 | Air outlet with 3/8" valve 1/4 turn and 25' hose. Location:driver side | $360 |
| 4460-0062 | Air outlet w/3/8" valve. Location: Officer side pump panel. | $300 |
| 4460-0063 | Innovative Control 5.5" Dia Pump Intake/Discharge Color Code Bezel Trim Ring. | $116 |
| 4460-0066 | Diagramtic Vinyl Pump Panel Label of the discharges & preconnects outlets. Location; On forward wall of L1 compartment adjacent to pump operator panel. Specified color coding. | $1,960 |
| 4460-0067 | Officer side pump panel shall include an access door to provide access to the cab tilt switch and manual jack as mounted. | $200 |
| 4460-0069 | Class 1 color coded bezel gauge trim ring - 3.5" gauge. | $43 |
| 4460-0070 | Fire Shop Trim Ring/Collar Chrome w/color code insert - Side Discharge/Intake | $98 |
| 4460-0073 | Pump Panel Tags 1" x 3" Addition label for each TM Control handles. | $70 |
| 4460-0074 | Air blow-out for:Frt Jumpline .75" lift lever turn valve IPOS. | $304 |
| 4460-0075 | Water/Foam Capacity label mounted adjacent to level gauges. | $57 |
| 4460-0077 | Foam tank tag colors on PPNL to match color of fill towers on unit IPO standard RED. | $26 |
| 4460-0078 | Pump panel tags special color. #1 -Red Crosslay #2 -Yellow 2" tank fill- Black 3" tank to pump- Black 2.5" Left Intake - Black 2.5 Left rear dis -Blue 3" Deck Gun - Grey 2.5 Left Dis - Pink 2.5 Right Dis- Green 4" Right Dis- Purple. | $323 |

| Item No. | Description | |
|---|---|---|
| 4460-0079 | Pump Panel Tags 1" x 3" Additional label for tank to pump control handle. The "in" position will be open and the "out" position will be closed. | $29 |
| 4460-0080 | Diagramatic Vinyl Overlay Rear Mount Pump Panel Label of the discharges & preconnects specified color coding for handles and gauges. | $1,960 |
| 4460-0081 | Stainless steel trim plates for all discharges intakes and pump inlets on hinge side pump panels. | $104 |
| 4460-0083 | Pump panel NFPA warning tags special location. | $47 |
| 4460-0085 | CAFS Air Outlet Valve Recess Driver side Pump Panel with door. | $380 |
| 4460-0086 | Air blow-out with Innovative Control 1/4" valve w/1/4 turn "T" handle and label for: [#LOC]. | $245 |
| 4460-0087 | Hose reel blow-out with Innovative Controls 1/4" valve w/1/4 turn handle. | $245 |
| 4460-0088 | Air outlet with Innovative Control 1/4" valve w/1/4 turn "T" handle and label for: [#LOC]. | $245 |
| 4460-0090 | All single tags placed directly on the pump panel to be mechanically fastened with screws. | $423 |
| 4460-0095 | Air outlet with Innovative Control 1/4" valve w/1/4 turn "T" handle w/label and 25' hose. Location: driver side | $360 |
| 4460-0096 | Speaker Grille Located on the pump operator panel. | $250 |
| 4465-0003 | FRC In-Control pressure governor. Includes engine and master pump gauges. | $5,598 |
| 4465-0005 | Class 1 Captain pressure governor. | $2,963 |
| 4465-0007 | Class1 Command Master pressure governor. Includes pump intake pressure and discharge pressure throttle relief tank level(s) water oil volt and tachometer. | $5,423 |
| 4465-0008 | FRC PumpBoss Pressure Governor. Includes engine gauges. | $2,753 |
| 4465-0009 | FRC Pro-S Pressure Governor | $2,906 |
| 4465-0010 | FRC In-Control pressure governor TGA200. Includes engine transmission and master pump gauges. | $5,659 |
| 4465-0011 | Class 1 TPG pressure governor. Includes water oil volt and tachometer. | $2,284 |
| 4465-0012 | Fire Commander II pressure governor. Includes engine gauges Pump Ditigal Master Gauges. Detroit engines only. | $5,415 |
| 4465-0013 | FRC In-Control pressure governor. Includes engine and master pump gauges.The discharge pressure display shall show pressures from 0 to 4000 kPa. The intake pressure display shall show pressures from -100 to 4000 kPa. | $5,598 |
| 4465-0015 | FRC In-Control pressure governor TGA300. Includes engine transmission and master pump gauges. | $4,122 |
| 4465-0017 | FRC PumpBoss pressure governor PBA400. Includes engine monitor gauges. | $2,753 |
| 4465-0018 | FRC InControl pressure governor TGA400. Includes engine transmission and master pump gauges. | $4,122 |
| 4465-0020 | Class 1 TPG Plus pressure governor. Includes master intake and discharge gauges water oil volt and tachometer. | $3,050 |
| 4465-0021 | FRC In-Control pressure governor TGA400-A10. Includes engine transmission and master pump gauges. | $4,122 |
| 4465-0022 | Class 1 Sun Guard Pressure governor cover. Durable steel construction in black matte finish. Flips up to read controls; lays flat when not in use. | $232 |
| 4465-0024 | The Pressure Governor as mounted on the pump panel shall include a stainless steel shield/visor to shade the display from direct sunlight (the shield/visor shall share the same painted on finish as the pump panel if applicable). | $155 |
| 4465-0028 | Class 1 Sentry pressure governor/ Twister throttle. Includes master intake and discharge gauges water oil tran volt and tachometer. | $2,930 |
| 4465-0030 | FRC PumpBoss pressure governor PBA200. Includes engine monitor gauges. | $2,373 |
| 4465-0031 | FRC Total Control pressure governor TCA100. Includes engine transmission and master pump gauges. | $3,628 |
| 4475-0000 | Pump certification 750-2250 GPM | $2,627 |
| 4475-0003 | Pump certification 750-2250 GPM. To be performed by UL (Underwriter's Laboratories). Stainless steel product only. | $2,627 |
| 4475-0004 | Pump certification 250-500 GPM | $1,884 |
| 4475-0007 | Factory pump test only not thrid party. | $1,884 |
| 4475-0008 | Pump Certification 3000 GPM. | $2,801 |
| **ELECTRICAL** | | $0 |
| 5010-0002 | Multiplex electrical system for pumper / tanker / rescue. | $3,547 |
| 5010-0003 | Multiplex modem kit. Includes cable modem and adapter harness. | $930 |
| 5010-0004 | Multiplex data logger. | $659 |
| 5010-0010 | Multiplex cab/non-multiplex body electrical system for pumper / tanker / rescue. | $3,547 |
| 5010-0013 | Vehicle data recorder - 2009 / 2016 NFPA compliant. Includes occupant detection with display. Display location: [#LOC]. | $2,612 |
| 5010-0014 | Vehicle data recorder for commercial cab - 2009 NFPA compliant. Includes occupant detection with display. Display location: [#LOC]. | $1,504 |
| 5010-0015 | Additional CrewGuard display for use with VDR. Location: [#LOC]. | $504 |
| 5010-0016 | Multiplex electrical system for rear mount pumper. | $4,288 |
| 5010-0024 | Modem for use with the E-ONE multiplex electrical system. | $649 |
| 5010-0036 | V-MUX Electrical system for pumper / tanker / rescue. | $3,547 |

| Item No. | Description | |
|---|---|---|
| 5010-0037 | Multi-color touch screen display for multiplexed based electrical system. Location: [#LOC]. | $1,921 |
| 5010-0049 | Vehicle data recorder - 2009 / 2016 NFPA compliant. Includes occupant detection shown in multiplex display. E-ONE chassis only. | $2,254 |
| 5010-0051 | HVAC Controlled through multiplex display(s). | $1,186 |
| 5010-0052 | Vista IV touch screen display for V-MUX electrical system. Location: [#LOC]. | $2,170 |
| 5010-0053 | Vehicle data recorder for commercial cab - 2009 NFPA compliant. Includes occupant detection shown in multiplex display. | $964 |
| 5010-0055 | Vista IV display for V-MUX electrical system. Location: [#LOC]. | $1,850 |
| 5010-0057 | GPS Module for V-MUX electrical system (Garmin). Includes antenna. Requires Vista display. | $1,668 |
| 5010-0059 | VFD Text display for V-MUX electrical system. Location: [#LOC]. | $806 |
| 5010-0065 | Pump and roll screen for multiplex display. Reference specification for details. | $1,546 |
| 5010-0067 | GPS Module for V-MUX electrical system (Weldon). Includes antenna. Requires Vista display with touch screen. | $1,262 |
| 5010-0069 | Es-Key Multiplex electrical system for pumper / tanker / rescue. | $3,547 |
| 5010-0074 | Special programming for multiplex color display (per hour). Requires engineering review and approval to determine feasibility and time. | $55 |
| 5010-0075 | Vista display to have a customized sticker for legend buttons (Reference info in file for new configuration). May require special programming fee. | $540 |
| 5010-0078 | Link2 Vehicle information system for V-MUX electrical system. Does not include required subscription. | $1,528 |
| 5010-0079 | Vista display translated to French. | $714 |
| 5010-0081 | Pump and roll screen for multiplex display. Reference specification for details. | $1,546 |
| 5010-0084 | Newton Dump control screen for multiplex display. | $557 |
| 5010-0086 | Weather proof Vista display for V-MUX electrical system. Location: [#LOC]. | $3,757 |
| 5050-0000 | Vanner Bravo 1800 watt inverter. For use with (2) quartz lights. Includes on/off switch in cab. Inverter to be mounted in a body compartment as close to the chassis batteries as practical (20' max cable length). | $2,889 |
| 5050-0001 | Vanner 2600 watt inverter. For use with quartz lights. Includes on/off switch in cab. Inverter to be mounted in cab below rear wall bench seat. | $4,460 |
| 5050-0002 | Vanner 2600 watt inverter. For use with (2) quartz lights. Includes on/off switch in L1 compartment next to breaker box. Inverter to be mounted in a L1 up high (20' max cable length). | $4,460 |
| 5050-0003 | Vanner 2600 watt inverter. For use with (2) quartz lights. Includes on/off switch in driver overhead console. Inverter to be mounted in L3 up high forward (20' max cable length). | $4,460 |
| 5050-0015 | Vanner 2600 watt inverter (NFPA rating at 1400 watts). Includes on/off switch in L1 compartment. Inverter to be mounted in a L1 forward wall up high (20' max cable length). | $4,460 |
| 5050-0016 | Vanner 2600 watt inverter (NFPA rating at 1400 watts). Inverter to be mounted in a L1 on permanent shelf (20' max cable length). | $4,460 |
| 5050-0017 | Body 110 volt outlets shall have a dedicated breaker within the breaker box for no more than every (2) body mounted receptacles (single outlet duplex etc. as applicable). This is to provide multiple isolated circuits as required that carry no more than (2) receptacles located throughout the body. | $534 |
| 5050-0018 | Vanner Tru-sine 1000 watt inverter. For use with (4) cab interior receptacles when generator is not running or shoreline is not connected. Includes on/off switch in cab. Inverter to be mounted in a body compartment as close to the chassis batteries as practical (20' max cable length). | $1,944 |
| 5050-0019 | Inverter prewire for dealer/customer supplied and installed 3KW inverter. Includes 12 volt wiring and A/C cabling to breaker box. Prewire to [#LOC]. | $828 |
| 5100-0000 | Foot switch to control air horns located [#LOC]. | $120 |
| 5100-0001 | Switch circuit three way. Includes (1) additional switch. An additional switch required for more than two locations. Location: [#LOC]. | $170 |
| 5100-0002 | Momentary switch with 6' pendant for cab tilt. Yellow weatherproof push button at end of coiled cord. Location of switch plug-in: [#LOC] | $378 |
| 5100-0006 | Foot switch to control Q2B located [#LOC]. | $120 |
| 5100-0007 | Foot switch to control electronic siren located [#LOC]. | $120 |
| 5100-0009 | Audible door ajar alarm wired through door ajar light. | $62 |
| 5100-0010 | Additional push button hose reel switch. Location: [#LOC]. | $188 |
| 5100-0011 | Switch 12V for 120-240V (EA). Location: [#LOC]. | $434 |
| 5100-0014 | Air horns to be interlocked through the master warning switch. | $102 |
| 5100-0015 | Back-up alarm override momentary switch located at the cab dash. The switch will allow for overriding the back-up alarm and reset after transmission is shifted again. | $60 |
| 5100-0017 | Wire rear amber through ignition switch. | $81 |
| 5100-0018 | Primary Warning switch to activate all warning lights and siren controls to be located driver's side overhead console. | $180 |
| 5100-0019 | Additional amber warning light override momentary switch located at the cab warning light switch panel. The switch will allow for overriding the rear additional amber warning lights and reset after ignition is turned off. | $325 |

| Item No. | Description | |
|---|---|---|
| 5100-0020 | Switch additional 12 volt/15 amp toggle. Location and function: Under driver side cab dash for master battery override. | $204 |
| 5100-0021 | Opticom switch wired through upper level warning switch. | $77 |
| 5100-0022 | Push-button hose reel switch. Location: [#LOC]. | $188 |
| 5100-0023 | Provide a single switch on the cab dash (within reach of the driver and officer) for locking and unlocking of all roll-up doors. The switch is to be red. Label RUD Lock. | $314 |
| 5100-0029 | Stirrup style hose reel switch. Location: [#LOC]. | $188 |
| 5100-0030 | Additional stirrup stlye hose reel switch. Location: [#LOC] | $188 |
| 5100-0036 | Additional programming instructions: [#LOC]. | $126 |
| 5100-0038 | Hose Reel rewind switch located in rubrail. | $96 |
| 5100-0039 | Foot switch(es) mounted on a 45 degree bracket. | $83 |
| 5100-0040 | Micro switch with 2.75'' lever upgrade. Location: (2) hosebed cover (1) ladder rack. | $81 |
| 5100-0042 | Ramsey control with 3' cord for cab tilt in addition to standard toggle. Red/Black weatherproof push buttons at end of cord. Location of switch plug-in: [#LOC]. | $378 |
| 5100-0044 | Rear cab heater switch. Function and location: [#LOC]. | $204 |
| 5100-0045 | Thermostatic controls for pump compt heaters. Thermostat set at freezing temp. | $256 |
| 5100-0046 | Cut-off switch for Q2B main power. Switch to be accessible from driver's seat. | $276 |
| 5100-0047 | Switch household 110V w/ weaterproof cover. Location and function: cab mounted next to air compressor for 120V air compressor | $204 |
| 5100-0048 | Magnetic door ajar switches IPO std for all body compt doors. | $735 |
| 5100-0049 | Ramsey control with 8' cord for cab tilt in addition to standard toggle. Red/Black weatherproof push buttons at end of cord. Location of switch plug-in: [#LOC]. | $378 |
| 5100-0050 | Push button test switch for tank or foam level gauge push button wired "hot" to batteries to allow checking tank level in fire station without having to power up truck electrical system. Located on operator pump panel. | $353 |
| 5100-0052 | Household toggle switch for 110V. Switch plate will be a Crouse Hinds TP7256. Switch will be wire to top plug of duplex recept on rear and be located next to recept. One switch for each top duplex. | $445 |
| 5100-0056 | Hose deployment switch in front bumper tray. Includes hinged plate on bottom of bumper tray with switch on floor and indicator light on pump panel. Requires tray without slats. Location: [#LOC]. | $598 |
| 5100-0060 | Switch for 12V quartz lights to be located on officer side overhead console IPOS. | $126 |
| 5100-0061 | Door ajar alarm override momentary switch located at the cab dash. The switch will allow for overriding the door ajar alarm and reset after transmission is shifted again. | $204 |
| 5100-0063 | Ramsey control with 10' cord for cab tilt. Red/Black weatherproof push buttons at end of cord. Location of switch plug-in: next to manual cab tilt pump | $378 |
| 5100-0064 | AM/FM radio to be connected to radio re-broadcast input of siren. Includes momentary sw on driver's sw panel that will disable connection when master power is cycled. | $325 |
| 5100-0072 | Locate Q2B brake in officer side overhead console IPO standard location of driver side overhead console. | $58 |
| 5100-0073 | Additional programming instructions: wire officer rear quartz light ajar switch through ladder rack controls. | $126 |
| 5100-0086 | Additional programming instructions: clear warning lights to remain on in bloking mode in accordance with Maryland Code Allowance. | $126 |
| 5100-0087 | Ramsey control plug-in for cab tilt in addition to standard toggle. Does not include tether controller. Location: [#LOC]. | $213 |
| 5100-0088 | Linemaster Twin 491-S foot switch to control air horns and Q2B located [#LOC]. | $385 |
| 5100-0089 | Foot switch to control electric fire bell located [#LOC]. | $120 |
| 5100-0090 | Foot switch to control Scream Eagle siren located [#LOC]. | $120 |
| 5100-0091 | Switch 12V for 110-240V (EA). Location: cab switch panel for rear body quartz light(s). | $434 |
| 5100-0094 | Ramsey control with 15' cord for cab tilt in addition to standard toggle. Red/Black weatherproof push buttons at end of cord. Location of switch plug-in: [#LOC]. | $378 |
| 5100-0095 | Switching controlled through the Multiplex display for 120-240V devices (EA). The 120-240V Multiplex switching utility shall be used for: [#LOC]. | $434 |
| 5100-0098 | Switch additional rocker lock-out safety style. Location and function: [#LOC]. | $204 |
| 5100-0099 | Momentary rocker switch for the Federal Rumbler (secondary siren) located on the driver and officer side overhead panels. The switches will allow for overriding the Federal Signal Rumbler siren and reset after ignition is turned off. | $325 |
| 5100-0100 | Switch additional (2) position shall be installed and properly labeled to enable operator to activate the OEM traffic horn or air horn. The switch shall be located: rear of body driver side approximately 65" above ground level. | $204 |
| 5100-0101 | Switch additional 12 volt/15 amp. Location and function: driver side pump panel for radio speaker as mounted on or near pump panel. | $204 |
| 5100-0102 | A cab interior audible alarm and hazard light. The light shall be blue in color and 2" diameter The alarm and hazard light shall be wired to the light tower to provide a clear indicator of when the light tower is raised or not in the bedded position. The light shall be mounted in the vicinity of the door ajar hazard light. | $151 |

| Item No. | Description | |
|---|---|---|
| 5100-0103 | Locate Q2B brake on lower dash between touch screens IPOS. | $58 |
| 5100-0104 | Air horn switch at rear body. Switch to be labeled ''Air Horn''. Location: driver side rear of body approx. eye level (if applicable). | $143 |
| 5100-0105 | Switch momentary. Head lights running lights and tail lights (on with ignition) override momentary switch located at the cab dash. The switch will allow for overriding the head lights running lights and tail lights (turning them off momentarily) after the ignition has been turned on. | $204 |
| 5100-0106 | Thermostatic control for compartment heater. Thermostat set at 60 degrees Fahrenheit to prevent freezing. Location: [#LOC]. | $131 |
| 5100-0107 | Cut-off switch for Q2B main power. Switch to be accessible from officer's seat. | $276 |
| 5100-0108 | Switch circuit three way 12V for 120-240V (EA). Includes (1) additional 12V for 120-240V switch. An additional switch required for more than two locations. Location: [#LOC]. | $434 |
| 5100-0109 | Audible alarm to sound when water level is below 1/4 tank remaining. | $289 |
| 5100-0112 | Ramsey control on officer side cab dash with 3' cord to operate Q2B and air horns. Red switch Q2B Black air horns. | $356 |
| 5100-0115 | Monarch control for cab tilt in place of standard toggle. | $415 |
| 5100-0116 | Weldon 4-button V-MUX switch module. Location [#LOC]. | $415 |
| 5100-0117 | Switch additional momentary 12 volt/15 amp. Location and function: [#LOC]. | $204 |
| 5100-0118 | Door ajar indicator switch for each SCBA air bottle storage compartment door on body wired to "Door Open" indicator inside cab. Switches as optioned are in addition to standard SCBA bottle retainer straps. | $57 |
| 5100-0119 | Rear cab heater Eaton guarded switch. Function and location: [#LOC]. | $204 |
| 5100-0120 | Switch additional guarded toggle. Location and Function: driver side rear of body for rear flood lights. | $204 |
| 5100-0125 | Door ajar indicator switches for all SCBA air bottle storage compartment doors on cab wired to "Door Open" indicator inside cab. | $57 |
| 5100-0127 | Switch panel three way. Includes (7) additional switches. An additional switch required for more than two locations. Location: L1 adjacent to breaker box for front brow lights driver 120V cab/body scene lights officer 120V cab/body scene lights driver 12V cab/body scene lights officer cab/body 12V scene lights and rear 12V scene lights. | $1,181 |
| 5100-0128 | Red flip cover for toggle switch. Location: [#LOC]. | $19 |
| 5100-0129 | Switch rear door fully open for dump valve power activation. | $369 |
| 5100-0130 | Weatherproof Eaton rocker switches on pump panel ipo toggle switches. | $233 |
| 5100-0131 | Foot switch(es) mounted on a 30 degree bracket. | $83 |
| 5100-0132 | Switch additional through multiplex display. Function: [#LOC] | $91 |
| 5100-0133 | Switch. Location and function: [#LOC]. | $204 |
| 5100-0135 | Cole Hersee lock out device for master battery switch. Model CLH24505. | $87 |
| 5100-0136 | Locate Q2B brake in officer side switch panel IPO standard location. | $58 |
| 5100-0138 | Push-button hose reel switch on 10' tether located in L1 rearward wall. | $295 |
| 5100-0139 | Foot switch Linemaster model 632S to control electric siren located [#LOC]. Includes 25 degree diamond plate bracket. | $120 |
| 5100-0140 | Ramsey control with 3' cord for cab tilt in place of standard toggle. Red/Black weatherproof push buttons at end of cord. Includes receptacle with cover. Location of receptacle: [#LOC]. | $378 |
| 5100-0141 | Ramsey control with 6' cord for cab tilt in addition to standard toggle. Red/Black weatherproof push buttons at end of cord. Location of switch plug-in: [#LOC]. | $378 |
| 5100-0142 | Switch door ajar additional. Location: front bumper raised lid. | $204 |
| 5100-0144 | Magnetic door ajar switch IPO std for [#LOC] body compt door. | $105 |
| 5100-0145 | Additional driver side overhead switches in addition to vista screen operations. See specifications. | $2,645 |
| 5100-0146 | Switch master activation for Newton Dumps with red cover located within the cab adjacing to Newton Dump control. | $170 |
| 5100-0147 | Ramsey control with 3' cord for cab tilt in addition to standard toggle. Red/Black weatherproof push buttons at end of cord hardwired adjacent to standard toggle. | $378 |
| 5100-0149 | Switch lever 120V shoreline disconnect. Location: Adjacent to shoreline receptacle. | $434 |
| 5100-0150 | Hose Reel rewind switch located in pump module rearward in rubrail. One (1) left and one (1) right side. | $188 |
| 5100-0152 | Locate Q2B brake through multiplex display(s) IPOS. | $58 |
| 5100-0153 | Locate Q2B brake on center lower dash panel IPO standard location. | $58 |
| 5100-0154 | Push-button hose reel switch on 10' tether located in R1 rearward wall. | $295 |
| 5110-0003 | High impact orange ABS plastic handheld spotlight SL-45 Location: [#LOC]. | $216 |
| 5110-0004 | Alternating flasher for headlights. | $347 |
| 5110-0005 | Pre-wire for trailer hitch. Includes stop left turn right turn marker and ground wires. Does not include connector. | $245 |
| 5110-0007 | Audible indicator in cab with rear button. The rear button will be located on the driver's side at the rear behind the hand rail (if applicable). | $354 |
| 5110-0008 | Audible indicator in cab with rear buttons. The rear buttons will be located one each side at the rear behind the hand rail (if equipped). | $391 |

| Item No. | Description | |
|---|---|---|
| 5110-0009 | Clock Digital 12/24 Waterproof mounted in cab officer's overhead dash. | $643 |
| 5110-0010 | Receptacle 12V 175A portable winch. Located at rear near trailer hitch. | $362 |
| 5110-0011 | Vehicle Information Control Center for E-One Multiplexed trucks located on Driver's Side. | $6,104 |
| 5110-0012 | Vehicle Information Control Center for E-One Multiplexed trucks located on Officer's Side. | $6,104 |
| 5110-0014 | Vehicle Information Control Center for E-One Multiplexed trucks located on Officer's Side. Display Only No computer. | $2,592 |
| 5110-0015 | Vehicle Information Control Center for E-One Multiplexed trucks located at center of engine cover mounted on swivel bracket. | $6,486 |
| 5110-0017 | Back-up alarm 97 dB. | $106 |
| 5110-0018 | 12 volt 12 gauge constant hot lead (24" long) with ground wire. Location: [#LOC]. | $83 |
| 5110-0024 | Back up alarm Grote 107 dB(A). | $271 |
| 5110-0025 | Back up horn system. Includes 12v independent horn (NAPA 730-1047) below officer's side dash 12v independent horn (NAPA 730-1047) at rear of body and Ramsey control switch with 25' tether at rear of body. | $847 |
| 5110-0026 | 12 volt 12 gauge wired through ignition lead (24" long) with ground wire. Location: [#LOC]. | $83 |
| 5110-0027 | Powered equipment rack alarm. To activate while rack is in motion. | $71 |
| 5110-0028 | Code3 model 700 flasher for alternating headlights. | $340 |
| 5110-0030 | Flasher alternating for headlights Whelen model UHF2150A. | $360 |
| 5110-0031 | 12 volt 12 gauge wired to chassis reverse (24" long) with ground wire. Location: back wall of rear bench seat riser. | $83 |
| 5110-0032 | Clock digital 12/24 waterproof mounted in [#LOC]. | $643 |
| 5110-0034 | 4 Pin trailer wiring flat connector. Includes matching plug. Requires trailer wiring pre-wire option. | $96 |
| 5110-0037 | Additional wiring instructions: [#LOC]. | $374 |
| 5110-0040 | Indicator light. Color: [#COL]. Location and function: [#LOC]. | $118 |
| 5110-0041 | 7 pin trailer wiring connector. Requires trailer wiring pre-wire option. | $128 |
| 5110-0042 | Trailer wiring and connector for 2009 NFPA 1901 Type I Type II or Type III trailer. Includes model 12-907 connector on body. Stop/turn/tail circuits shall be connected remaining wires to be coiled up for future use. Trailer end 12-906 shipped loose. | $472 |
| 5110-0043 | Back-up alarm Federal Reactor model 210350 self-adjusting. | $184 |
| 5110-0044 | ABS cover for multiplex PDMs' located in the pump module. | $97 |
| 5110-0045 | Radio interface cable-run a 7-conductor 20 gauge wiring (578865) from the pump panel microphone box to the center overehead area leave a 30" coil of wire at each end. | $571 |
| 5110-0046 | 4 Pin trailer wiring heavy duty round connector. Includes matching plug. Requires trailer wiring pre-wire option. | $107 |
| 5110-0052 | 12V power distribution module. Includes (6) battery hot and (6) switched hot circuits. 100 amps max (IATS). Location: [#LOC]. | $314 |
| 5110-0060 | 12 volt 4 gauge constant hot lead (24" long) with ground wire. Location: [#LOC]. | $247 |
| 5110-0065 | Lighted bumper guide (PR). Bores model 848211 located (1) each side of front bumper extension. | $418 |
| 5110-0066 | Switches in cab (2) for controlling (2) TNT DT 4.0 diesel engine hydraulic power units. Switches to be kill/run/start with indicator light. Run wiring into dunnage area with extra length for dealer installation. | $1,076 |
| 5110-0067 | Back up alarm Preco 97 dB(A) warble tone. | $275 |
| 5110-0068 | Handheld flashlight orange Streamlight Litebox flashlight with vehicle mount system. Location: [#LOC]. | $194 |
| 5110-0069 | Back up alarm ECCO model 410 97 dB(A) grommet mount. | $212 |
| 5110-0070 | Vehicle Information Control Center for E-One Multiplexed trucks swivel pedestal mount located at center between driver and officer. Mid engine cabs only. | $6,486 |
| 5110-0079 | Back up alarm Ecco model SA917 87-112dB. | $241 |
| 5110-0082 | Receptacle 12V 175A portable winch. There will be a total of four locate one at each of the receiver. | $1,443 |
| 5110-0083 | Receptacle 12V 175A portable winch. There will be a total of three locate one at each of the side and rear receivers. | $1,082 |
| 5110-0087 | Tekonsha model Prodigy 2 trailer brake controls wired to connector. Control located in cab accessible to driver. Requires 9-pin connector. | $900 |
| 5110-0088 | Lighted bumper guide (PR) with angled support brackets. Bores model 848211 located (1) each side of front bumper extension. | $540 |
| 5110-0089 | Back-up alarm Ecco model 575 107dB. | $178 |
| 5110-0090 | Breaker box grounding cable. 10' 2Ga cable attached to ground side of breaker box. Includes clamp on end of cable for use with aerial ground pad. | $237 |
| 5110-0094 | Wiring instructions: Dedicated ground wire for 12V distribution module located behind officer seat. | $133 |
| 5110-0109 | Indicator light Weldon 9186-2300. Color: [#COL]. Location and function: [#LOC]. | $118 |
| 5110-0110 | Receptacle 12V 175A portable winch. Located at front near receiver. | $362 |
| 5110-0112 | Back up alarm Preco model 1040. | $183 |
| 5110-0113 | Indicator light. Color: Red. Location and function: pump operator panel for foam pump on. | $118 |
| 5110-0114 | Powered equipment rack alarm; Preco 97dB(A) warble tone. To activate while rack is in motion and through park brake. | $275 |

| Item No. | Description | |
|---|---|---|
| 5110-0119 | CAT V cable run. This will include CAT V wire non-plenum. Run cable from microphone box on pump panel to center overhead in cab. | $146 |
| 5110-0120 | Receptacle 12V 175A portable winch. There will be a total of three locate one at each of the side and front receivers. | $1,082 |
| 5110-0124 | Audible indicator in cab with rear buttons. The rear buttons will be located [#LOC]. | $391 |
| 5110-0125 | Receptacle 12V 175A portable winch. There will be a total of (2) locate one (1) on each side near under body receivers. | $723 |
| 5110-0132 | Indicator light. Color: Green. Location and function: driver side overhead for jake brake "on". | $118 |
| 5110-0133 | 12 volt 10 gauge constant hot lead (24" long) with ground wire. Location: [#LOC]. | $96 |
| 5110-0135 | Additional wiring overlays to support Whelen 900 series lighting (not OEM installed). Lights shall be installed at a later date. One (1) each side of body on forward upper body corners. | $190 |
| 5110-0138 | Regen indicator light with warning tag . Whelen 500 series TIR6 amber light located in rubrail above exhaust end. Includes warning tag to read "High Exhaust Heat When Flashing". Light to be wired through indicator in cab and park brake. | $317 |
| 5110-0139 | 12 volt 14 gauge wired through ignition lead (36" long) with ground wire. Location: [#LOC]. | $98 |
| 5110-0140 | 12 volt 10 gauge wired through ignition lead terminated in a junction box with ground wire. Location: [#LOC]. | $98 |
| 5110-0143 | Handheld flashlight orange Streamlight HID Litebox flashlight with vehicle mount system. Location: [#LOC]. | $1,386 |
| 5110-0144 | Hopkins 7 pin trailer wiring connector model 48495-7 RV blade. Requires trailer wiring pre-wire option. | $132 |
| 5110-0145 | Pre-Wiring for trailer hitch should include a hot 12vdc and back-up light wire at the connector and a wire from the connector to the cab for future electric brake unit in cab. In the cab there should be a wire labeled for brake lights to connect to future electric brake unit. Connector sold separately. | $245 |
| 5110-0146 | Cole-Hersee trailer tail light converter model 48000. Trailer connector sold separately. | $321 |
| 5110-0149 | Generator power shall be supplied to the command desk area. One (1) 12/3 cable shall supply 20 amps with 10' of wire coiled at the command desk area. The wires shall be clearly marked to identify them as 110V/20A generator power. | $355 |
| 5110-0150 | Shoreline power shall be supplied to the command desk area. One (1) 12/3 cable shall supply 20 amps with 10' of wire coiled at the command desk area. The wires shall be clearly marked to identify them as 110V/20A shoreline power. | $355 |
| 5110-0153 | 12V power distribution module. Includes (6) battery hot and (6) switched hot circuits. 100 amps max (IATS). Includes circuit breakers ipo fuses. Location: [#LOC]. | $314 |
| 5110-0154 | Dow Corning 738 white electrical sealant. Apply to all exposed electrical connections. | $338 |
| 5110-0155 | Customer supplied handheld spotlight SL-45 shall be mounted in place. Location: [#LOC]. | $177 |
| 5110-0158 | 12 volt 12 gauge lead (24" long) with ground wire wired to battery saver. Location: [#LOC]. | $83 |
| 5110-0160 | Pollak 7 pin trailer wiring connector model 12-709. Requires trailer wiring pre-wire option. | $190 |
| 5110-0161 | Blue Sea 12V power distribution module model 5025 (2) and (1) 5026 wired through battery hot. Location: (1) 5025 in center cab dash (1) 5026 in forward floor of radio cabinet and (1) 5025 behind officer seat. | $1,180 |
| 5110-0162 | Wiring instructions: Dedicated ground wire for 12V distribution module located at driver and officer 3x3 post. | $133 |
| 5110-0166 | Blue Sea 12V power distribution module model 5025 (2) and (1) 5026 wired through ignition hot. Location: (1) 5025 in center cab dash (1) 5026 in forward floor of radio cabinet and (1) 5025 behind officer seat. | $1,180 |
| 5110-0169 | Aluminum smooth plate cover for foam controller shall be located on back of controller. | $206 |
| 5110-0173 | LINE-X package for miscellaneous parts mounted on the body: Includes aerial style or similar brackets used for beacon lights camera shield license plate bracket traffic advisor box (non-recessed only) fabricated shield over traffic advisor fabricated light boxes and other brackets used for mounting scene and warning lights stirrup style switch as applicable. | $258 |
| 5110-0174 | Back up alarm Hella model A1399 SA-BBS-97. | $300 |
| 5110-0179 | Durabak package for miscellaneous parts mounted on the body: Includes aerial style or similar brackets used for beacon lights camera shield license plate bracket traffic advisor box (non-recessed only) fabricated shield over traffic advisor fabricated light boxes and other brackets used for mounting scene and warning lights stirrup style switch as applicable. | $258 |
| 5110-0180 | Collision Avoidance Systems model CAS-4HW rear obstacle detection and proximity system. Includes 4 sensors at rear of vehicle and speaker in cab. | $1,908 |
| 5110-0185 | 12 volt 12 gauge constant hot lead (24" long) with ground wire and circuit breaker. Location: [#LOC]. | $137 |
| 5110-0187 | Pre-wire for customer supplied electric fire bell. Includes push button activation switch on center cab dash offset to officer side. | $344 |
| 5110-0188 | Handheld flashlight orange Streamlight Knucklehead Haz-LO LED flashlight with charger. Location: [#LOC]. | $365 |
| 5110-0191 | 12V power distribution module. Includes (12) battery hot circuits. 100 amps max (IATS). Location: [#LOC]. | $314 |

| Item No. | Description | |
|---|---|---|
| 5110-0192 | 12V power distribution module. Includes (12) switched hot circuits. 100 amps max (IATS). Location: [#LOC]. | $314 |
| 5130-0000 | Cord reel 150 feet of 12/3 black cord installed on the [#LOC] with an electric rewind. | $1,859 |
| 5130-0001 | Cord reel electric with 200' of 10/3 black cable. Locate [#LOC]. | $2,195 |
| 5130-0002 | Cord reel electric with 200' of 10/3 yellow cable. Location(s): [#LOC]. | $2,478 |
| 5130-0003 | Cord reel electric with 200' of 10/4 black cable. Location: [#LOC]. | $2,471 |
| 5130-0004 | Cord reel electric with 200' of 10/4 yellow cable. Location [#LOC]. | $3,204 |
| 5130-0006 | Rollers for cord reel mounted on reel. Locate: [#LOC]. | $358 |
| 5130-0007 | Cord connector. Daniel Woodhead 3 wire NEMA 5-15 straight blade female located on cord for reel in [#LOC]. | $84 |
| 5130-0008 | Cord connector. Daniel Woodhead 3 wire NEMA L5-15 twist lock female located on cord for reel in [#LOC] | $86 |
| 5130-0009 | Cord connector. Daniel Woodhead 3 wire NEMA L5-20 twist lock female located on cord for reel in [#LOC]. | $117 |
| 5130-0010 | Cord connector. Daniel Woodhead 4 wire NEMA L14-20 twist lock female located on cord for reel in [#LOC]. | $117 |
| 5130-0011 | Cord connector. Daniel Woodhead 3 wire NEMA L6-20 twist lock female located on cord for reel in [#LOC] | $117 |
| 5130-0012 | Junction box Circle-D with four (4) 3-wire NEMA L5-15 110 volt 15 amp twist lock receptacles. Located on cord for reel in [#LOC]. | $756 |
| 5130-0013 | Junction box Circle-D with four (4) 3-wire NEMA L5-20 110 volt 20 amp twist lock receptacles. Located on cord for reel in [#LOC]. | $756 |
| 5130-0014 | Circle D wall/floor mounting box. Mount at final or ship loose (customer preference). For use with reel located in or on [#LOC]. | $149 |
| 5130-0015 | Junction box Circle-D with two (2) 15 amp straight blade and two (2) 20 amp twist lock receptacles. Located on cord for reel in [#LOC]. | $955 |
| 5130-0016 | Junction box Circle-D with all twist lock 2-120V and 2-240V outlets. Located on cord for reel in [#LOC]. | $936 |
| 5130-0017 | Junction box Woodhead with four (4) NEMA L5-15 110 Volt 15 Amp twist lock receptacles. Located on cord for reel in [#LOC]. | $1,503 |
| 5130-0018 | Junction box Daniel Woodhead with four (4) NEMA L5-20 110 volt 20 amp twist lock receptacles. Located on cord for reel in [#LOC]. | $1,202 |
| 5130-0022 | Rollers for cord reel mounted through panel. Location(s): [#LOC]. | $358 |
| 5130-0024 | Electric cord reel rewind switch. Switch located [#LOC]. | $120 |
| 5130-0026 | Cord connector. Fire Power 3 wire 20A/110V female located on cord for reel in [#LOC]. | $606 |
| 5130-0027 | Cord connector. Duraline 4 wire 20A/220V female located on cord for reel in [#LOC]. | $159 |
| 5130-0028 | Rollers captive for cord reel mounted on reel. | $358 |
| 5130-0030 | Junction box Circle-D with one (1) straight blade and three (3) twist lock receptacles. Located on cord for reel in [#LOC]. | $955 |
| 5130-0031 | Cord reel electric/manual back-up with 200' of 10/3 black cable. Crank handle mounted next to reel. Locate [#LOC] | $2,636 |
| 5130-0032 | Cord reel electric with 150' of 10/4 yellow cable. Location [#LOC] | $3,204 |
| 5130-0033 | Junction box Circle D with four (4) 3-wire NEMA 5-15 110 volt 15 amp straight blade receptacles. Located on cord for reel in [#LOC]. | $756 |
| 5130-0034 | Cord reel Akron electric with 200' of 10/3 yellow cable. Location(s): [#LOC]. | $2,365 |
| 5130-0035 | Junction box Circle-D with (3) L5-15 and (1) L5-20 110Volt twist lock receptacles. Located on cord for reel in [#LOC]. | $756 |
| 5130-0036 | Diamond plate cord reel cover over reel. Use rollers provided with reel on cover IPO E-One supplied if applicable. Location: [#LOC] | $626 |
| 5130-0037 | Cord reel Akron electric with 200' of 10/4 yellow cable. Location(s): [#LOC] | $3,095 |
| 5130-0038 | Junction box Circle-D with (2) L5-20 twist lock and (2) 5-20 110Volt straight blade duplex receptacles. Located on cord for reel in [#LOC]. | $756 |
| 5130-0039 | Bracket for rollers. A support bracket for rollers shall be provided up high at compt opening for reel in [#LOC]. | $272 |
| 5130-0040 | Hannay PWM (Pulse Width Modulator) control for reel. Mounted next to switch for cord reel in [#LOC]. | $674 |
| 5130-0041 | Cord reel rollers bracket mounted on top of [#LOC]. | $358 |
| 5130-0042 | Junction box Circle-D with four (4) 3-wire Nema 5-20 110Volt 20 Amp duplex receptacles. Located on cord for reel in [#LOC]. | $838 |
| 5130-0044 | Junction box Akron with (2) 5-20 125v 20 Amp duplex recepts and (2) L5-20 125v 20 Amp twist lock recepts. Located on cord for reel in [#LOC]. | $596 |
| 5130-0045 | Akron model EJB-VMT-TP mounting box. Locate box for use with reel in or on [#LOC]. | $291 |
| 5130-0046 | Junction box Circle-D with one (1) 5-20 straight blade and three (3) L5-20 twist lock receptacles. Box wired as 240v with individual circuit breakers on box. Located on cord for reel in [#LOC]. | $955 |

| Item No. | Description | |
|---|---|---|
| 5130-0048 | Junction box Circle-D with (2) NEMA 5-20 120V GFCI duplex and (2) NEMA L6-20 220V twist lock receptacles. Located on cord for reel in [#LOC]. | $955 |
| 5130-0049 | Cord reel electric for 200' of 10/3 cable. Cable not included. Location(s): [#LOC] | $2,217 |
| 5130-0054 | Cord reel electric with 200' of 8/3 black cable. Locate [#LOC] | $3,759 |
| 5130-0055 | Rollers for cord reel mounted on support bracket. Location(s): [#LOC] | $358 |
| 5130-0056 | Junction box Woodhead with (3) NEMA L5-15 110 Volt 15 Amp twist lock receptacles and (1) NEMA 5-20 110 Volt 20 Amp household receptacle. Located on cord for reel in [#LOC]. | $1,503 |
| 5130-0057 | Mounting box for Woodhead junction box. Mount at final or ship loose (customer preference). For use with reel located in or on [#LOC]. | $272 |
| 5130-0058 | Junction box Akron with four (4) 3-wire NEMA L5-20 110 volt 20 amp twist lock receptacles. Located [#LOC]. | $596 |
| 5130-0059 | Junction box Circle-D with four (4) FirePower FP11 110Volt 20 Amp receptacles. Located on cord for reel in [#LOC]. | $1,233 |
| 5130-0061 | Cord reel electric with 250' of 10/3 black cable. Locate [#LOC]. | $2,589 |
| 5130-0062 | Junction box Circle-D with (2) 5-20 straight blade and (2) twist lock receptacles; (1) L5-20 and (1) L5-15. Located on cord for reel in [#LOC]. | $955 |
| 5130-0063 | Cord reel electric with 200' of 12/3 black cable. Locate [#LOC]. | $2,589 |
| 5130-0067 | Junction box Akron with (4) 5-20-GFCI 125v 20 Amp duplex recepts. Includes 12" pigtail with L14-20 connector and rubber feet. Located on cord for reel in [#LOC]. | $596 |
| 5130-0068 | Cord reel electric with 200' of 10/3 yellow cable. Location(s): [#LOC]. | $2,478 |
| 5130-0069 | Cord reel electric with 250' of 10/3 yellow cable. Locate [#LOC]. | $2,943 |
| 5130-0070 | Cord connector. Hubbell 4 wire NEMA L14-20 twist lock female located on cord for reel in [#LOC] | $117 |
| 5130-0073 | Cord reel electric low profile with 200' of 10/3 yellow cable. Location(s): [#LOC]. | $3,140 |
| 5130-0074 | Cord connector. Daniel Woodhead 3 wire NEMA 5-20 straight blade female located on cord for reel in [#LOC]. | $84 |
| 5130-0079 | Cord reel electric with 150' of 10/3 yellow cable. Location(s): [#LOC]. | $2,274 |
| 5130-0080 | Junction box Circle-D with four (4) 3-wire NEMA L5-20 110 volt 20 amp GFCI twist lock receptacles. Located on cord for reel in [#LOC]. | $955 |
| 5130-0081 | Cord reel electric model ECR 1620-17-18 with 200' of 10/4 yellow cable. Location [#LOC]. | $3,204 |
| 5130-0082 | Cord connector. Daniel Woodhead 3 wire NEMA L5-30 twist lock female located on cord for reel in [#LOC]. | $164 |
| 5130-0083 | Slideout roller assembly for reel located in [#LOC]. | $996 |
| 5130-0084 | Junction box Circle-D with one (1) 15 amp straight blade and three (3) 15 amp twist lock receptacles. Located on cord for reel in [#LOC]. | $955 |
| 5130-0087 | Cord connector. Daniel Woodhead 4 wire NEMA L14-30 twist lock female located on cord for reel in [#LOC]. | $164 |
| 5130-0088 | Junction box Woodhead with two (2) NEMA L5-20 110V 20A twist lock and two (2) NEMA 5-20 110V 20A duplex receptacles. Located on cord for reel in [#LOC]. | $1,365 |
| 5130-0090 | Junction box Akron with (4) 5-15 120v 15 Amp duplex recepts. Located on cord for reel in [#LOC]. | $596 |
| 5130-0093 | Cord reel electric. Chrome / stainless with 200' of 10/3 yellow cable. Location(s): [#LOC]. | $2,644 |
| 5130-0094 | Cord reel electric with 200' of 10/3 black cable model ELFCR1622-14-16. Locate [#LOC]. | $2,195 |
| 5130-0101 | Cord reel electric with 150' of 10/4 yellow cable. Reel to include strap (Comet) brake to provide drag pressure to reel axle. Location [#LOC] | $3,284 |
| 5130-0102 | Junction box Circle-D with four (4) 3-wire 120Volt 20 Amp Hubbel model HBL7310B twist lock receptacles. Located on cord for reel in [#LOC]. | $955 |
| 5130-0103 | Junction box Circle-D with four (4) 3-wire NEMA L5-20 110 volt 20 amp GFCI twist lock receptacles with 220V feed. Located on cord for reel in [#LOC]. | $955 |
| 5130-0104 | Cord reel electric with 150' of 10/4 black cable. Location: [#LOC]. | $2,021 |
| 5130-0105 | Cord reel electric CMW 6020 with 200' of 10/3 yellow cord. Location: [#LOC]. | $5,996 |
| 5130-0107 | Cord reel electric with 200' of 12/3 yellow cable. Locate [#LOC]. | $2,659 |
| 5130-0108 | Cord reel electric with 150' of 10/4 yellow cable. Reel has 3 conductor cover IPO 4 (for narrower reel). Location: [#LOC]. | $3,204 |
| 5130-0109 | Junction box Circle D with four (4) 3-wire 20 amp receptacles two (2) twist lock NEMA L 5-20 and two (2) straight blade NEMA 5-20 receptacles. Located on cord for reel in [#LOC]. | $815 |
| 5130-0111 | Stirrup style cord reel rewind switch. Location: [#LOC]. | $188 |
| 5130-0112 | Junction box Akron with (3) NEMA L5-20 GFCI twistlock and (1) NEMA L6-20 220V twist lock receptacle. Located on cord for reel in [#LOC]. | $698 |
| 5130-0114 | Rollers hydraulic/air reel rollers mounted through panel. Location(s): [#LOC]. | $358 |
| 5130-0115 | Junction box Akron with (2) NEMA L5-15 GFCI twistlock and (2) NEMA L14-20 120V/240V twist lock receptacle. Located on cord for reel in [#LOC]. | $698 |
| 5130-0116 | Optional Comet (friction) brake for Hannay cord reel (EA). | $75 |
| 5130-0120 | Cord reel electric painted black from manufacturer with 200' of 10/3 black cable. Locate [#LOC]. | $2,195 |
| 5130-0121 | Junction box Akron with four (4) 3-wire NEMA L5-15 110 volt 15 amp twist lock receptacles. Located [#LOC]. | $596 |

| Item No. | Description | |
|---|---|---|
| 5130-0122 | Cord connector. Hubbell 3 wire NEMA L5-15 twist lock female with yellow seal-tite cover located on cord for reel in [#LOC]. | $136 |
| 5130-0123 | Smooth plate cord reel cover with black Durabak finish over reel. Use rollers provided with reel on cover IPO E-One supplied if applicable. Location: [#LOC] | $752 |
| 5130-0124 | Junction box Circle-D with (3) L5-20 twist lock and (1) 5-20 110V straight blade duplex receptacles. Located on cord for reel in [#LOC]. | $756 |
| 5130-0125 | Cord reel Hannay electric low profile with 200' of 10/3 black cable. Locate [#LOC]. | $2,832 |
| 5130-0126 | Junction box Circle-D with (1) L5-20 twist lock and (3) 5-15 110Volt straight blade duplex receptacles. Located on cord for reel in [#LOC]. | $756 |
| 5130-0127 | Cord reel electric with 175' of 10/3 yellow cable. Location [#LOC]. | $3,204 |
| 5130-0131 | Cord reel electric Hannay model 1614-17-18 with 150' of 10/3 black cable. Location(s): [#LOC]. | $2,003 |
| 5130-0132 | Cord reel electric Hannay model 1614-17-18 with 150' of 10/3 yellow cable. Location(s): [#LOC]. | $2,085 |
| 5130-0133 | Cord reel electric Hannay model 1615-17-18 with 150' of 10/3 black cable. Location(s): [#LOC]. | $2,177 |
| 5130-0137 | Cord reel electric low profile with 200' of 10/3 black cable; Hannay model ELFCR1636-10-11-6. Locate [#LOC]. | $2,340 |
| 5130-0139 | Junction box Circle-D with two (2) 15 amp twist lock receptacles and two (2) 20 amp twist lock receptacles. Located on cord for reel in [#LOC]. | $955 |
| 5130-0140 | Cord reel electric low profile with 200' of 10/3 yellow cable; Hannay model ELFCR1636-10-11-6. Locate [#LOC]. | $2,633 |
| 5130-0141 | Junction box Circle-D with two (2) 15 amp straight blade and two (2) 15 amp twist lock receptacles. Located on cord for reel in [#LOC]. | $955 |
| 5130-0142 | Air reel rewind switch. Switch located [#LOC]. | $120 |
| 5130-0143 | Junction box Woodhead with (1) NEMA 5-15 110V GFCI duplex receptacle (2) NEMA L5-20 110V GFCI twist lock receptacles and (1) NEMA L6-20 220V twist lock receptacle. Located on cord for reel in [#LOC]. | $1,695 |
| 5130-0146 | Junction box Circle-D with two (2) 15 amp duplex receptacles and two (2) 20 amp duplex receptacles. Located on cord for reel in [#LOC]. | $955 |
| 5130-0150 | Junction box Woodhead with (2) NEMA L5-20 110 Volt 20 Amp twist lock receptacles and (2) NEMA 5-20 110 Volt 20 Amp household receptacle. Located on cord for reel in [#LOC]. | $1,503 |
| 5130-0151 | Cord reel low profile electric with 200' of 10/4 yellow cable. Location: [#LOC]. | $3,377 |
| 5150-0003 | Weldon auxiliary turn signal model 9186-8560 (PR). Location: [#LOC] | $212 |
| 5150-0007 | Whelen 600 series LED vertical mount tail lights. Includes LED stop/tail arrow turn and halogen back-up lights with vertical Cast 3 housing and weatherproof connectors. | $1,343 |
| 5150-0008 | Whelen 600 series LED vertical mount tail lights. Includes LED stop/tail arrow turn and halogen back-up lights with vertical Cast 4 housing and weatherproof connectors. | $1,643 |
| 5150-0010 | Whelen 600 series LED horizontal mount tail lights. Includes LED stop/tail turn and halogen back-up lights. Available on G067 L193 and Q100/114 only. With weatherproof connectors. | $1,476 |
| 5150-0011 | Whelen 600 series LED vertical mount tail lights. Includes LED stop tail turn and halogen back-up lights with vertical Cast 3 housing and weatherproof connectors. | $1,447 |
| 5150-0012 | Whelen 600 series LED vertical mount tail lights. Includes LED stop/tail turn and halogen back-up lights with vertical Cast 4 housing and weatherproof connectors. | $1,542 |
| 5150-0015 | Whelen 600 series vertical mount taillights. Includes incandescent stop/tail arrow turn and halogen backup lights with vertical Cast 4 housing and weatherproof connectors. | $748 |
| 5150-0017 | License plate light LED with chrome housing located at the rear of the body. | $140 |
| 5150-0018 | Marker lights additional amber LED Trucklite Model 21 (PR). Location: [#LOC] | $180 |
| 5150-0019 | Marker lights addtional red LED Trucklite Model 21 (PR). Location: [#LOC] | $180 |
| 5150-0020 | Weldon model 1010 LED / incandescent tail lights. Includes red LED stop/tail/turn and clear incandescent back-up. | $388 |
| 5150-0022 | Marker light LED body package. Commercial pumper bodies only. | $819 |
| 5150-0023 | Weldon Model 1010 LED / incandescent tail lights. Includes red LED stop/tail amber LED turn and clear incandescent back-up. | $564 |
| 5150-0025 | Marker light LED body/cab package. E-One custom cab and pumper or tanker body only. | $1,374 |
| 5150-0032 | Bracket license plate at rear of body. | $41 |
| 5150-0036 | Truck-Lite LED tail lights. Includes 4" red LED stop/tail amber LED turn and clear LED back-up. | $867 |
| 5150-0037 | Zico backing light (PR) with white pained housing model #ZQL-RV-H7614. Location: [#LOC]. | $407 |
| 5150-0039 | Marker lights Britax amber/red rubber housed mounted on the rear body corners angled down. | $305 |
| 5150-0042 | Federal Signal LED tail lights. Includes 4" diameter red LED stop/tail amber turn and LED clear back-up. | $589 |
| 5150-0050 | Zico backing lights (PR) with polished stainless steel housing model ZQL-SS-H7614. Location: [#LOC]. | $628 |
| 5150-0052 | Code 3 65STK4 vertical mount tail lights. Includes red LED stop/tail amber LED turn and white LED back-up lights. | $2,093 |
| 5150-0053 | Code 3 65PKG vertical mount tail lights. Includes red LED stop/tail amber arrow LED turn and white LED back-up lights. | $1,704 |

| Item No. | Description | |
|---|---|---|
| 5150-0056 | Whelen 600 series LED vertical mount tail lights. Includes LED stop/tail arrow turn and back-up lights with vertical Cast 3 housing and weatherproof connectors. | $2,144 |
| 5150-0057 | Whelen 600 series LED vertical mount tail lights. Includes LED stop/tail arrow turn and back-up lights with vertical Cast 4 housing and weatherproof connectors. | $2,443 |
| 5150-0058 | Federal Signal QuadraFlare LED vertical mount tail lights. Includes LED stop/tail arrow turn and back-up lights with vertical Cast 4 housing and weatherproof connectors. | $1,340 |
| 5150-0059 | Federal Signal QuadraFlare LED vertical mount tail lights. Includes LED stop/tail arrow turn and back-up lights with vertical Cast 3 housing and weatherproof connectors. | $1,170 |
| 5150-0060 | Federal Signal QuadraFlare LED vertical mount tail lights. Includes LED stop/tail turn and back-up lights with vertical Cast 3 housing and weatherproof connectors. | $1,280 |
| 5150-0063 | Double chrome trim ring for Weldon 1010 tail lights (PR). | $283 |
| 5150-0064 | Whelen PSR00XRR series LED red third brake light. Light mounted above recessed traffic advisor. | $342 |
| 5150-0066 | Marker light LED body/cab package. E-One custom cab and pumper or tanker body only. Model 10 front marker lights mounted on top of cab. | $1,620 |
| 5150-0068 | Marker lights Britax LED amber/red rubber housed mounted on the rear body corners angled down. | $417 |
| 5150-0069 | Federal Signal QuadraFlare LED vertical mount taillights. Includes LED stop/tail arrow turn and backup lights with weatherproof connectors. | $1,362 |
| 5150-0071 | Light Whelen model PSR00XRR LED (EA) red 3rd brake light. Location: [#LOC]. | $202 |
| 5150-0072 | Marker light LED body/cab package. E-One custom cab and pumper or tanker body only. Includes: Trucklite Model 10 front marker lights mounted on top of cab Trucklite rear upper body and Whelen lower cab/body marker lights. | $2,101 |
| 5150-0073 | Marker lights additional red LED Whelen Model 50R00MRR (PR). Location: [#LOC] | $259 |
| 5150-0074 | Marker lights additional amber LED Whelen Model 50A00MAR (PR). Location: [#LOC] | $259 |
| 5150-0075 | Whelen 600 series LED vertical mount taillights. Includes LED stop/tail arrow turn and backup lights with individual chrome flanges and weatherproof connectors. | $2,896 |
| 5150-0076 | Whelen 700 LED auxiliary chevron turn signal (PR) with 15 degree castings. Location: [#LOC] | $757 |
| 5150-0077 | Whelen 900 series LED tail lights. Includes LED stop/tail arrow turn and back-up lights with weatherproof connectors. | $5,223 |
| 5150-0078 | Truck-Lite model #35720 guards for front LED clearance lights on cab. | $96 |
| 5150-0079 | Spring mounted plate for rear DOT lighting. Locate centered below rear of body. | $381 |
| 5150-0080 | Weldon auxiliary turn signal model 9186-8580 LED (PR). Location: [#LOC]. | $289 |
| 5150-0081 | Light Whelen 500 model 5SR00XRR red LED 3rd brake light (ea). Location: [#LOC]. | $227 |
| 5150-0082 | Whelen 600 series LED vertical mount taillights. Includes LED stop/tail arrow turn in vertical Cast 3 housing with 900 series halogen backup lights down low and weatherproof connectors. | $1,785 |
| 5150-0091 | Whelen M6 series LED vertical mount tail lights. Includes LED stop/tail arrow turn and back-up lights with vertical 4 light housing and weatherproof connectors. | $1,700 |
| 5150-0093 | Marker light LED body/cab package. E-One custom cab and stainless steel body only. | $1,374 |
| 5150-0098 | Truck-Lite auxiliary turn signal model 60117Y LED (PR) with model 60719 stainless steel cover. Location: [#LOC]. | $276 |
| 5150-0099 | LED marker light cab and body package. E-ONE custom cab and SS body vehicles. | $1,374 |
| 5150-0101 | Whelen M9 series LED taillights. Includes LED stop/tail arrow turn and backup lights with weatherproof connectors. | $3,567 |
| 5150-0120 | Whelen 600 LED auxiliary arrow turn signal (PR) with 15 degree castings. Location: [#LOC]. | $690 |
| 5150-0121 | Trucklite model MDL60 chrome bezels for front cab corner marker/turn lights. | $57 |
| 5150-0122 | Marker lights addtional red LED Trucklite Model 15 (PR). Location: [#LOC]. | $107 |
| 5150-0123 | Marker lights addtional amber LED Trucklite Model 15 (PR). Location: [#LOC]. | $107 |
| 5150-0126 | Marker light LED cab package. E-One custom cab only. | $788 |
| 5150-0127 | Whelen M6 series LED vertical mount tail lights. Includes LED stop/tail arrow turn lights with vertical 3 light housing (PR) with M9LZC Super LED scene lights (PR) with chrome flanges and weatherproof connectors. | $2,666 |
| 5150-0130 | License plate light LED with chrome housing located at the rear of the body driver side down low. | $140 |
| 5150-0133 | License plate light LED with chrome housing located at the rear of the body below B1 entry door. | $140 |
| 5150-0134 | License plate light incandescent with chrome housing located at the rear of the body. | $140 |
| 5150-0145 | Marker light LED body/cab package. E-One custom cab and SS pumper body. | $1,374 |
| 5150-0146 | Taillights Federal Signal DOT STT/BU. Includes 4" LED red stop/tail/turn and 4" LED clear back-up lights. | $289 |
| 5150-0147 | Whelen 600 series LED vertical mount tail lights. Includes LED stop/tail arrow turn and halogen back-up lights with individual chrome flanges and weatherproof connectors. | $2,097 |
| 5150-0148 | Bracket license plate at rear of body. Fabricated from .125" smooth plate aluminum painted job color. | $50 |
| 5150-0149 | License plate light incandescent with chrome housing located at the rear of the body below tailboard/body. | $58 |
| 5150-0150 | Weldon LED vertical mount tail lights. Includes LED stop taill turn and halogen back-up lights with vertical 4 housing and weatherproof connectors. | $1,968 |

| Item No. | Description | |
|---|---|---|
| 5150-0152 | Federal Signal QuadraFlare LED vertical mount tail lights. Includes LED stop/tail arrow turn and back-up lights with individual chrome bezels and weatherproof connectors. | $1,112 |
| 5150-0154 | License plate light EON LED located at the rear of the body. | $117 |
| 5150-0155 | Whelen 600 series LED vertical mount taillights. Includes LED stop/tail arrow turn and backup lights with individual black flanges and weatherproof connectors. | $2,343 |
| 5150-0156 | Marker lights Britax model L428 LED amber/red rubber housed (PR). Location: [#LOC]. | $417 |
| 5150-0158 | Whelen M6 series LED vertical mount tail lights with clear lenses. Includes LED stop/tail arrow turn and back-up lights with vertical 4 light housing and weatherproof connectors. | $1,700 |
| 5150-0159 | License plate light EON LED located on front bumper. | $117 |
| 5150-0160 | Marker lights Britax LED amber/red rubber housed mounted on the rear body corners angled up. | $417 |
| 5150-0161 | Weldon auxiliary turn signal and marker light model 9186-8580 LED (PR). Location: [#LOC]. | $289 |
| 5150-0162 | Weldon LED vertical mount tail lights. Includes LED stop taill turn and back-up lights with vertical 4 housing and weatherproof connectors. | $2,391 |
| 5150-0166 | Light Whelen M6 red LED 3rd brake light (ea). Location: [#LOC] | $284 |
| 5150-0167 | Weldon clearance light model 9186-8580 LED (PR). Low intensity only wired as steady on with marker light circuit. Location: (1) each side in body wheel well offset forward. | $289 |
| 5150-0169 | License plate light LED with black housing located at the rear of the body. | $140 |
| 5150-0170 | Optronics 4" GloLight LED taillights. Includes red LED stop/tail amber turn and clear back-up. | $546 |
| 5200-0000 | Breaker box 8 place single phase. Includes main breaker. Note: Main breaker occupies 2 places leaving 6 available. Locate [#LOC]. | $879 |
| 5200-0001 | Breaker box 12 place single phase. Includes main breaker. Note: If gen is 6KW or less main will occupy 2 places leaving 10 available. Locate [#LOC]. | $919 |
| 5200-0002 | Breaker Box 20 Place Single Phase. Includes main breaker. Locate [#LOC]. | $936 |
| 5200-0003 | Breaker box 2 place single phase (70A 110/220V). Location [#LOC]. | $392 |
| 5200-0007 | Breaker box 30 place single phase. Includes main breaker. Maximum generator size 48 KW. Location: [#LOC]. | $1,450 |
| 5200-0008 | Breaker box 16 place single phase. Includes main breaker. Locate [#LOC]. | $923 |
| 5200-0009 | Breaker box 8 place single phase; no main breaker. For use with multiple options wired through shoreline power with 30A or larger inlet recept. Locate adjacent to main breaker box. | $685 |
| 5250-0003 | Generator Onan 6KW diesel. Requires fuel pick up option in chassis and 3rd party testing. Generator location: [#LOC]. | $15,744 |
| 5250-0004 | Generator Onan 10KW diesel. Requires fuel pick up option in chassis and 3rd party testing. Generator location: [#LOC]. | $20,100 |
| 5250-0005 | Generator Onan 6KW hydraulic. Includes generator control / PTO engage switch and a gauge panel located adjacent to breaker box. Generator location: [#LOC]. | $13,466 |
| 5250-0006 | Generator Onan 8KW hydraulic. Includes generator control/PTO engage switch and a gauge panel located adjacent to circuit breaker box. Generator location: [#LOC]. | $15,156 |
| 5250-0007 | Generator Onan 10KW hydraulic. Includes generator control / PTO engage switch and a gauge panel located adjacent to breaker box. Generator location: [#LOC]. | $15,737 |
| 5250-0008 | Generator Harrison 15KW MPC hydraulic. Includes generator control / PTO engage switch and a gauge panel located adjacent to breaker box. Generator location: [#LOC]. | $26,089 |
| 5250-0009 | Generator Harrison 20KW MPC hydraulic. Includes generator control / PTO engage switch and a gauge panel located adjacent to breaker box. Generator location: [#LOC]. | $28,187 |
| 5250-0012 | Generator Onan 15KW hydraulic. Includes generator control/PTO engage switch and a gauge panel located adjacent to circuit breaker box. Note: Generator is not compatible with an Amkus electric hyd tool power unit. Generator location: [#LOC]. | $22,729 |
| 5250-0017 | Generator Honda EM5000SXK with 4.5KW continuous output. Generator location: [#LOC]. | $6,374 |
| 5250-0026 | Generator Smart Power 10KW hydraulic model ER110. Includes generator control / PTO engage switch and a gauge panel located adjacent to breaker box. Generator location: [#LOC]. | $17,952 |
| 5250-0036 | Generator Smart Power 6KW hydraulic model HR-6 (with top mount cooler). Includes generator control / PTO engage switch and a gauge panel located adjacent to breaker box. Generator location: [#LOC]. | $14,297 |
| 5250-0037 | Generator Smart Power 8KW hydraulic model HR-8 (with top mount cooler). Includes generator control/PTO engagement switch and a gauge panel located adjacent to the circuit breaker box. Generator location: [#LOC]. | $16,338 |
| 5250-0038 | Generator Smart Power 10KW hydraulic model HR-110 (with top mount cooler). Includes generator control / PTO engage switch and a gauge panel located adjacent to breaker box. Generator location: [#LOC]. | $17,952 |
| 5250-0039 | Generator Harrison 10KW MCR hydraulic. Includes generator control / PTO engage switch and a gauge panel located adjacent to breaker box. Generator location: [#LOC]. | $16,986 |
| 5250-0040 | Generator Harrison 6KW MCR hydraulic. Includes generator control / PTO engage switch and a gauge panel located adjacent to breaker box. Generator location: [#LOC]. | $13,231 |
| 5250-0042 | Generator Westerbeke 5KW diesel (model#5.0 BCDB). Requires fuel pick up option in chassis and 3rd party testing. Generator location: [#LOC]. | $16,280 |

| Item No. | Description | |
|---|---|---|
| 5250-0043 | Dealer installed generator. Option includes space only. Dealer responsible for NFPA required 3rd party generator testing. | $311 |
| 5250-0045 | Generator Harrison 30KW MPC hydraulic. Includes generator control / PTO engage switch and a gauge panel located adjacent to breaker box. Generator location: [#LOC]. | $34,547 |
| 5250-0047 | Generator Smart Power 15KW hydraulic model HR-15 (with top mount cooler). Includes generator control / PTO engage switch and a gauge panel located adjacent to breaker box. Generator location: [#LOC]. | $23,880 |
| 5250-0050 | Generator Smart Power 20KW hydraulic model HR-20 (with top mount cooler). Includes generator control / PTO engage switch and a gauge panel located adjacent to breaker box. Generator location: [#LOC]. | $26,255 |
| 5250-0051 | Locate generator gauge panel on pump operators panel ipo next to breaker box. | $126 |
| 5250-0054 | Generator Onan 7.5KW diesel. Requires fuel pick up option in chassis and 3rd party testing. Generator location: [#LOC]. | $14,110 |
| 5250-0055 | Generator Smart Power 8KW hydraulic model ER8. Includes generator control / PTO engage switch and a gauge panel located adjacent to breaker box. Generator location: [#LOC] | $19,346 |
| 5250-0056 | PTO engage switch to be wired as follows: switch in the down position (PTO off) and switch in the up position (PTO engage). | $120 |
| 5250-0060 | Dealer installed Onan 6KW diesel generator located [#LOC]. Option includes space only. Dealer responsible for NFPA required 3rd party generator testing. | $311 |
| 5250-0061 | Dealer installed Onan 6KW hydraulic generator located [#LOC]. Option includes space only. Dealer responsible for NFPA required 3rd party generator testing. | $311 |
| 5250-0062 | Dealer installed Onan 8KW hydraulic generator located [#LOC]. Option includes space only. Dealer responsible for NFPA required 3rd party generator testing. | $311 |
| 5250-0063 | Dealer installed Onan 10KW hydraulic generator located [#LOC]. Option includes space only. Dealer responsible for NFPA required 3rd party generator testing. | $311 |
| 5250-0064 | Dealer installed Onan 15KW hydraulic generator located [#LOC]. Option includes space only. Dealer responsible for NFPA required 3rd party generator testing. | $311 |
| 5250-0065 | Dealer installed Onan 20KW hydraulic generator located [#LOC]. Option includes space only. Dealer responsible for NFPA required 3rd party generator testing. | $311 |
| 5250-0066 | Dealer installed Smart Power 10KW hydraulic model ER110 generator located [#LOC]. Option includes space only. Dealer responsible for NFPA required 3rd party generator testing. | $311 |
| 5250-0067 | Dealer installed Smart Power 10KW hydraulic model HR110 generator located [#LOC]. Option includes space only. Dealer responsible for NFPA required 3rd party generator testing. | $311 |
| 5250-0068 | Dealer installed Smart Power 6KW hydraulic model HR-6 (with top mount cooler) generator located [#LOC]. Option includes space only. Dealer responsible for NFPA required 3rd party generator testing. | $311 |
| 5250-0069 | Dealer installed Smart Power 8KW hydraulic model HR-8 (with top mount cooler) generator located [#LOC]. Option includes space only. Dealer responsible for NFPA required 3rd party generator testing. | $311 |
| 5250-0070 | Dealer installed Smart Power 15KW hydraulic model HR-15 (with top mount cooler) generator located [#LOC]. Option includes space only. Dealer responsible for NFPA required 3rd party generator testing. | $311 |
| 5250-0071 | Dealer installed Smart Power 20KW hydraulic model HR-20 (with top mount cooler) generator located [#LOC]. Option includes space only. Dealer responsible for NFPA required 3rd party generator testing. | $311 |
| 5250-0072 | Dealer installed Harrison 6KW MCR hydraulic generator located [#LOC]. Option includes space only. Dealer responsible for NFPA required 3rd party generator testing. | $311 |
| 5250-0073 | Dealer installed Harrison 10KW MCR hydraulic generator located [#LOC]. Option includes space only. Dealer responsible for NFPA required 3rd party generator testing. | $311 |
| 5250-0074 | Dealer installed Harrison 30KW MPC hydraulic generator located [#LOC]. Option includes space only. Dealer responsible for NFPA required 3rd party generator testing. | $311 |
| 5250-0075 | Guarded generator PTO engage toggle switch. Located driver side cab switch panel. For use on Typhoon X and CIIX cabs only. | $204 |
| 5250-0076 | Guarded PTO engage rocker switch. Located driver side cab switch panel. For use on Quest CIIX LTH aerial and commercial cabs. | $204 |
| 5250-0077 | Generator Harrison 8KW MCR hydraulic. Includes generator control / PTO engage switch and a gauge panel located adjacent to breaker box. Generator location: [#LOC]. | $16,801 |
| 5250-0078 | Generator Smart Power 10KW hydraulic Liberator model Li15 (with top mount cooler and XRT hyd tool pump). Includes generator control / PTO engage switch and a gauge panel located adjacent to breaker box. Generator location: [#LOC]. | $27,746 |
| 5250-0080 | Dealer installed 5KW gas generator located [#LOC]. Option includes space only. Dealer responsible for NFPA required 3rd party generator testing. | $311 |
| 5250-0082 | Dealer installed Westerbeke 10KW diesel generator located [#LOC]. Option includes space only. Dealer responsible for NFPA required 3rd party generator testing. | $311 |

| Item No. | Description | |
|---|---|---|
| 5250-0092 | Generator Honda EM5000SXK with 4.5KW continuous output. NFPA rated at 3.3KW. Generator location: [#LOC]. | $5,775 |
| 5250-0094 | Harrison gas powered 5.5KW generator. Includes alternator duct and attached fuel tank. Locate in compartment [#LOC]. | $4,382 |
| 5250-0106 | Westerbeke 10KW BTDAR diesel single phase generator and XRT Hydraulic tool system with 3 tool capability. 10500 PSI system. Includes selector valve for each reel hyd res / filter and remote cooler. Requires fuel pick up option in chassis and 3rd party testing. Locate in dunnage pan offset to officer side. Route (4) lead lines to B1 compt. | $48,237 |
| 5250-0111 | Westerbeke 10KW BTDAR diesel single phase generator and XRT Hydraulic tool system with 2 tool capability. 10500 PSI system. Includes selector valve for each reel hyd res / filter. Requires fuel pick up option in chassis and 3rd party testing. Locate in [#LOC]. Route (4) lead lines to B1 compt. | $48,237 |
| 5250-0115 | Generator Harrison 15KW MPC hydraulic w/IHT. Includes tool circuit manifold aux heat exchanger generator control / PTO engage switch and a gauge panel located adjacent to breaker box. [#LOC] | $35,016 |
| 5250-0116 | Dealer installed Powertech 8KW diesel generator located [#LOC]. Option includes space only. Dealer responsible for NFPA required 3rd party generator testing. | $311 |
| 5250-0117 | Generator Harrison 8KW MAS hydraulic. Includes generator control/PTO engage switch and a gauge panel located adjacent to breaker box. Generator location: [#LOC]. | $16,801 |
| 5250-0118 | Generator Harrison 8KW LPG hydraulic. Includes generator control switch to engage the PTO and start the generator and a gauge panel located adjacent to breaker box. Generator location: [#LOC]. | $16,487 |
| 5250-0123 | Generator Honda EM4000 with 3.5KW continuous output. NFPA rated at 3.3KW. Generator location: [#LOC]. | $5,775 |
| 5250-0124 | Generator Smart Power 6KW hydraulic model LR-6 Light Rescue Series (FORD 250 350 450 550 Chassis). Includes generator control / PTO engage switch and a gauge panel located adjacent to breaker box. Generator location:[#LOC]. | $15,126 |
| 5250-0125 | Generator Harrison 10KW LPG hydraulic. Includes generator control/PTO engage switch and a gauge panel located adjacent to breaker box. Generator location: [#LOC]. | $16,986 |
| 5250-0128 | Generator Smart Power 15KW hydraulic Liberator model Li20 (with top mount cooler and XRT hyd tool pump). Includes generator control switch and a gauge panel located adjacent to breaker box. Generator location: [#LOC]. | $32,383 |
| 5250-0129 | Generator Harrison 8KW MDS hydraulic. Includes generator control/PTO engage switch gauge panel located adjacent to breaker box and 80cc hyd pump (requires driver side port on EVS3000 trans). Generator location: [#LOC]. | $20,974 |
| 5250-0130 | Generator Harrison 6KW MDS hydraulic w/IHT for continuous accessory. Includes aux hyd system manifold integral aux heat exchanger generator control / PTO switch aux system / PTO switch (both switches accessible by driver) and a generator gauge panel located adjacent to breaker box. Generator location: [#LOC]. | $26,378 |
| 5250-0131 | Generator toggle switch (IPOS keyed switch). Located: [#LOC]. | $204 |
| 5250-0132 | Generator Harrison 8KW MDS hydraulic w/IHT for continuous accessory. Includes aux hyd system manifold integral aux heat exchanger generator control / PTO switch aux system / PTO switch (both switches accessible by driver) and a generator gauge panel located adjacent to breaker box. Generator location: [#LOC]. | $28,377 |
| 5250-0134 | Generator Harrison 6KW LPG hydraulic with remote mounted reservoir. Includes generator control / PTO engage switch and a gauge panel located adjacent to breaker box. Generator location: [#LOC]. | $17,356 |
| 5250-0135 | Generator Harrison 10KW MCR hydraulic w/IHT for continuous accessory. Includes aux hyd system manifold aux heat exchanger generator control / PTO switch aux system / PTO switch (both switches accessible by driver) and a generator gauge panel located adjacent to breaker box. Generator location: [#LOC]. | $26,686 |
| 5250-0137 | Generator Harrison 10KW LPG hydraulic with remote reservoir. Includes generator control/PTO engage switch and a gauge panel located adjacent to breaker box. Generator location: [#LOC]. | $16,986 |
| 5250-0138 | Generator Smart Power 20KW hydraulic Liberator model Li25 (with top mount cooler and XRT hyd tool pump). Includes generator control switch guarded PTO switch and a gauge panel located adjacent to breaker box. Generator location: [#LOC]. | $39,514 |
| 5250-0139 | Dealer installed Westerbeke 8W diesel generator located dunnage pan offset to officer side. Option includes space only. Dealer responsible for NFPA required 3rd party generator testing. | $311 |
| 5250-0141 | Generator Smart Power 6KW hydraulic model ER6. Includes generator control / PTO engage switch and a gauge panel located adjacent to breaker box. Generator location: [#LOC]. | $14,297 |
| 5250-0142 | Generator Harrison 6KW LPG hydraulic. Includes generator control / PTO engage switch and a gauge panel located adjacent to breaker box. Generator location: [#LOC]. | $14,234 |
| 5250-0143 | Generator Onan 8KW hydraulic 50 Hz. Includes generator control/PTO engage switch and a gauge panel located adjacent to circuit breaker box. Generator location: [#LOC]. | $15,737 |
| 5250-0144 | Generator Harrison 12KW MCR hydraulic. Includes generator control / PTO engage switch and a gauge panel located adjacent to breaker box. Generator location: [#LOC]. | $17,901 |

| Item No. | Description | |
|---|---|---|
| 5250-0145 | Generator Harrison 6KW LPG hydraulic w/IHT. Includes tool system manifold aux heat exchanger generator control / PTO switch tool sytem / PTO switch (both switches accessible by driver) and a generator gauge panel located adjacent to breaker box. Generator location: [#LOC]. | $22,969 |
| 5250-0146 | Generator PTO engage programmed through multiplex display. For use on Typhoon X and CIIX cabs only. | $204 |
| 5250-0147 | Generator Smart Power 10KW hydraulic Liberator model Li10 (with top mount cooler and compatible with an XRT pump). Includes generator control / PTO engage switch and a gauge panel located adjacent to breaker box. Generator location: [#LOC]. | $25,346 |
| 5250-0151 | Generator Harrison 6KW MAS hydraulic. Includes generator control/PTO engage switch and a gauge panel located adjacent to breaker box. Generator location: [#LOC]. | $13,231 |
| 5250-0152 | Generator Harrison 10KW MAS hydraulic. Includes generator control/PTO engage switch and a gauge panel located adjacent to breaker box. Location: [#LOC] | $16,986 |
| 5255-0001 | 3rd party generator test with pump. | $94 |
| 5260-0000 | Generator air deflector for Onan hydraulic. When generator is compartment mounted or mounted in a pan on an aerial body engineering is to specify updraft or downdraft. | $460 |
| 5260-0001 | Remote start for diesel generator. Location: [#LOC]. | $434 |
| 5260-0002 | Remote control starting kit for Honda EM3800SX EM4000 EM5000SX and EM6500SX generators. Locate [#LOC]. | $749 |
| 5260-0004 | Generator prewire for dealer supplied and installed 5 KW portable generator. Includes 12 volt wiring and cable between breaker box. Prewire to [#LOC]. | $281 |
| 5260-0006 | Compartment door(s) of compartment mounted generator to have interlock. | $211 |
| 5260-0008 | Generator prewire for dealer supplied and installed 6.5KW portable generator. Includes 12volt wiring and cable between breaker box. Prewire to [#LOC]. | $345 |
| 5260-0009 | Generator oil drain valve with tube extending below driver side pump panel. | $220 |
| 5260-0010 | Remote start switches for Honda EM3800SX portable generator. Honda remote start kit with E-ONE supplied switches on pump panel. This option may void factory generator warranty from Honda. | $1,052 |
| 5260-0011 | Extend exhaust pipe from dunnage pan mounted portable generator into pump compartment using stainless steel flexible pipe. | $99 |
| 5260-0013 | Locate generator gauge panel to the outboard side of the breaker box. | $126 |
| 5260-0014 | Oil drain valve with tube extending below officer side pump panel. | $220 |
| 5260-0015 | Generator prewire for dealer supplied and installed 2.5 KW portable generator. Includes 12volt wiring and cable between breaker box with #66W47 posi-lock Woodhead recpt. Prewire to R1 forward wall up high. | $466 |
| 5260-0016 | Extend exhaust pipe from dunnage pan mounted portable generator in line with main exhaust system using stainless steel flexible pipe. | $99 |
| 5260-0017 | Compartment door(s) of compartment mounted compressor to have interlock. | $211 |
| 5260-0019 | The exhaust of the gas generator to be routed downward and to the exit to below the unit to the officer side of the unit. | $279 |
| 5260-0020 | Compartment door(s) of compartment mounted electric dump valve to have interlock. | $211 |
| 5260-0021 | Oil drain valve with tube extending below driver side pump panel. | $220 |
| 5260-0023 | Generator platform to raise the generator up 8" in the storage pan. Generator raised due to heat from generator exhaust. | $417 |
| 5260-0024 | Locate generator gauge panel on the pump operators panel in lieu of standard location adjacent to breaker box. | $126 |
| 5260-0025 | Generator prewire for dealer supplied and installed 3.5 KW portable generator (Honda or other with equivalent dimensions). Includes 12 volt wiring and A/C cabling to breaker box. Prewire to [#LOC]. | $281 |
| 5260-0027 | Locate generator gauge panel above breaker box on a formed bracket. See photos on file with sales. | $126 |
| 5260-0032 | Bolt-on diamond plate cover on top of generator. See photos on file. | $273 |
| 5260-0033 | Diamond plate guard to protect the generator's wiring and harnesses in the dunnage pan. The guard will go full height of the dunnage pan forward to rear separating the generator and breaker box from the other side (driver's side) of the dunnage pan. | $349 |
| 5260-0034 | Vertical exhaust for Harrison MCR and MPC generators 6KW - 20KW. | $533 |
| 5260-0037 | Generated auxiliary 12V power system wired through diesel generator. System includes (3) Power Max 100A 12V converters to power VMUX electrical system. Generator not included (engine off but ignition must be in "on" posiion). Requires Engineering review for generator and 12V power requirements. | $6,669 |
| 5260-0039 | Generator prewire for dealer supplied and installed 5.5KW portable generator. Includes 12volt wiring and cable between breaker box. Prewire to dunnage pan. | $399 |
| 5260-0041 | Idle reduction system powered by a diesel generator. System includes (2) Power Max 100A 12V converters to power the vehicle electrical system. Requires diesel generator. Requires Engineering review for generator and 12V power requirements. | $4,169 |
| 5260-0042 | Compartment door(s) on officer side to be interlocked with ladder rack. | $211 |

| Item No. | Description | |
|---|---|---|
| 5260-0046 | Generator prewire for dealer supplied and installed 2KW portable generator. Includes 12 volt wiring and cable between breaker box. Prewire to [#LOC]. | $311 |
| 5260-0047 | Aesthetic shield for hydraulic generator on outboard end of dunnage pan. To be 3-sided open top and constructed from diamond plate. | $460 |
| 5260-0048 | Hinged diamond plate cover with out access hole on top of generator. Cover is to be hinged so as to tilt forward of the generator. See photos on file. | $273 |
| 5260-0050 | Wiring and hydraulic line(s) (if equipped) covers for compartment mounted generator. | $285 |
| 5260-0054 | Generator prewire for dealer supplied and installed 3KW portable generator. Includes 12 volt wiring and cable between breaker box. Prewire to [#LOC]. | $311 |
| 5300-0000 | Light bar Code 3 model XL5100 (PR) 22" Long. All red lens. Location: [#LOC] | $1,280 |
| 5300-0003 | Light bar Code 3 model 556A3 56" long with all red lenses. Location: Centered on the front cab roof | $1,761 |
| 5300-0004 | Light bar Code 3 model 718A1 (PR) 18" Long. Red Upper / Clear Lower lens. Location: [#LOC]. | $1,443 |
| 5300-0015 | Light bars Federal Signal ADX2201 LED (PR) with red lenses. Location: [#LOC]. | $3,188 |
| 5300-0017 | Light bar Federal Signal Jet Stream 48" LED with R/W/R lenses red diodes and single traffic clearing light. Location: Centered on the front cab roof | $2,615 |
| 5300-0020 | Light bar Federal Signal JetStream JLX54HH 54" LED. Red Solaris reflectors with red domes each side and (2) center clear TCL lights. Location: Centered on the front cab roof. | $2,909 |
| 5300-0021 | Light bar Federal Signal JetSolaris 60" LED. Red Solaris reflectors with clear domes. NFPA compliant. Does not require 2 addl side facing bars. Location: Centered on the front cab roof. | $2,765 |
| 5300-0023 | Light bars Federal Signal 22I (PR). Location: [#LOC]. | $1,156 |
| 5300-0024 | Light bar Federal Signal Aerodynic 25RQL-Fast 52" with red/clear lens. Location: Centered on the front cab roof. | $1,603 |
| 5300-0026 | Light bar Federal Signal Aerodynic ADL5202 52" with red/clear/red lens. Location: Centered on the front cab roof. | $1,515 |
| 5300-0028 | Light bar Federal Signal Aerodynic ADX5271 52" with 10 red Solaris LED reflectors. Location: Centered on the front cab roof | $3,071 |
| 5300-0029 | Light bar Federal Signal AeroDynic ADX7201 72" with 8 red Solaris LED reflectors. Location: Centered on the front cab roof. | $3,217 |
| 5300-0030 | Light bar Federal Signal Aerodynic AH1LC 72" with red/clear lens. Location: Centered on the front cab roof. | $1,932 |
| 5300-0031 | Light bar Federal Signal Aerodynic AH2LC 72" with red/clear lens. Location: Centered on the front cab roof | $2,009 |
| 5300-0044 | Light bar Federal Signal Vector VC6001. Location: Centered on the front cab roof | $2,268 |
| 5300-0047 | Light bar Whelen model 9M380NQ66 w/MKEZ7 mounts. Location: Centered on the front cab roof. | $2,921 |
| 5300-0048 | Light bar Whelen Centurion model C300700N 72". Location: Centered on the front cab roof | $1,785 |
| 5300-0049 | Light bar Whelen Edge model 9M380NV 66" with MKEZ7 mounts. Location: Centered on the front cab roof | $3,343 |
| 5300-0050 | Light bar Whelen Edge model 9M387NQ 72" with MKEZ7 mounts without rear facing strobes. N/A on INTL Chassis. Location: Centered on the front cab roof | $3,074 |
| 5300-0051 | Light bar Whelen model 9M387NV 72" all strobe with MKEZ7 mounts. N/A with Vista roof with front facing windows. N/A on INTL Chassis. Location: Centered on the front cab roof | $3,074 |
| 5300-0053 | Light bar Whelen Freedom model FN66QLED 66" with MKEZ7 mounts. All LED light bar without rear facing LEDs. Location: Centered on the front cab roof. | $3,959 |
| 5300-0055 | Light bar Whelen Freedom model FN72QLED 72" LED with MKEZ7 mounts and clear lenses. Location: Centered on the front cab roof. | $4,060 |
| 5300-0056 | Light bar Whelen Freedom model FN72VLED 72" LED with MKEZ7 mounts. N/A INTL Chassis or Vista roofs with front facing windows. Location: Centered on the front cab roof. | $4,060 |
| 5300-0059 | Light bar Whelen model 9MINNFPA 28 1/4" strobe with MKEZ7 mounts (PR). Location: [#LOC] | $3,113 |
| 5300-0060 | Light bar Code 3 model 574NFPA1 74" with all red lenses. Location: Centered on the front cab roof. | $2,036 |
| 5300-0065 | Light bar Federal Signal ADX2202 LED (PR) with red lenses. Located side facing only. Not NFPA compliant forward facing. Location: [#LOC]. | $1,977 |
| 5300-0070 | Light bar Federal Signal JetStream JLX5401 LED 54". Red Solaris reflectors with red domes. Location: Centered on the front cab roof | $2,367 |
| 5300-0074 | Whelen Mini-Freedom LED light bars (PR) model FNMINI 24" with red/clear lenses and low profile MK9 mounts. Location: [#LOC]. | $4,592 |
| 5300-0082 | Whelen Mini-Freedom LED side facing light bars (PR) model FT8RRRRF 24" with MKEZ7 mounts. Location: [#LOC]. Lens color: Clear. | $4,399 |
| 5300-0084 | Whelen Mini-Freedom LED light bars (PR) model FNMINI 24" with red/clear lenses and MKEZ7 mounts. Location: [#LOC]. | $4,592 |
| 5300-0086 | Light bar Code 3 MX model 758A1. Upper deck contains (4) rotators (2 ea side) with red lenses and (2) clear oscilasers. Lower deck contains (2) frt red halogen flashers outboard intersection sweeps and clear lenses. Loc: Centered on the frt cab roof. | $1,964 |
| 5300-0087 | Light bar Code 3 model XL5100 22" Long. All red lens. Location: Centered on the front cab roof. | $642 |

| Item No. | Description | |
|---|---|---|
| 5300-0088 | Light bar Whelen Freedom model FN55VLED 55" LED with MKEZ7 mounts. N/A with Vista roofs with front facing windows. Location: Centered on the front cab roof. | $3,587 |
| 5300-0089 | Light bar Code 3 MX model 769A1. Upper deck contains 9 rotators w/ red lenses. Lower deck contains intersection sweeps w/clear lenses. Location: Centered on the front cab roof. | $2,034 |
| 5300-0091 | Light bar Code 3 Excalibur model X58A. Upper deck contains (4) rotators (two ea side) with red lenses and (2) white oscilasers with clear lenses. Lower deck contains (4) takedown lights and two alley lights. Location: Centered on the front cab roof. | $2,231 |
| 5300-0092 | Light bar Whelen Freedom model FN55QLED 55" LED with takedown lights MKEZ7 mounts and clear lenses. Location: Centered on the front cab roof. | $3,886 |
| 5300-0093 | Light bar Whelen Freedom model FN72VLED 72" LED with Opticom and MKEZ7 mounts. N/A INTL Chassis or Vista roofs with front facing windows. Location: Centered on the front cab roof. | $6,795 |
| 5300-0094 | Light bar Federal Signal 22I (ADL2201Y) with 175 FPM rotators (PR). Location: [#LOC] | $1,156 |
| 5300-0095 | Light bar Code 3 MX model 769 with R/C/C/C/B lenses. Upper deck contains 9 rotators. Lower deck contains intersection sweeps w/clear lenses. Location: Centered on the front cab roof. | $2,034 |
| 5300-0096 | Light bar Code 3 Javelin LED model JX67A. Location: Centered on the front cab roof. | $6,828 |
| 5300-0099 | Light bar Federal Signal JLX21 LED (PR). Located side facing only. Location: [#LOC]. | $1,938 |
| 5300-0100 | Light bar Whelen Freedom model FN72QLED 72" LED with clear lenses and MKEZ7 mounts. Includes (8) red LED and (2) white LED. N/A INTL Chassis. Location: Centered on the front cab roof. | $4,512 |
| 5300-0101 | Light bar Federal Signal Aerodynic ADL5202 52" with blue lenses. Location: Centered on the front cab roof. | $1,515 |
| 5300-0102 | Whelen Mini-Freedom LED side facing light bars (PR) model FT8RCRCF 24" with MKEZ7 mounts. Location: [#LOC]. Lense colors: Clear. | $4,365 |
| 5300-0103 | Light bar Whelen Freedom model FN66QLED 66" LED with 795H Opticom takedown lights and MKEZ7 mounts. Location: Centered on the front cab roof. | $5,603 |
| 5300-0105 | Light bar Code 3 model 718A1 (PR) 18" Long. Red upper/clear lower lens driver side and blue upper/clear lower officer side. Location: [#LOC] | $1,248 |
| 5300-0106 | Light bar Code 3 MX model 769 with B/B/C/R/R upper lenses clear lower lenses. Upper deck contains (8) rotators; (4) each side and alley lights. Lower deck contains intersection sweeps (4) LED warning; (2) blue driver and (2) red officer. Includes pre-wire for opticom in the center of the upper deck. Location: Centered on the front cab roof. Requires 5300-0105. | $3,650 |
| 5300-0107 | Light bar Code 3 MX7400-ALRC-777 58" long. Location: Centered on the front cab roof. Includes (1) steady burn red light for California DOT. | $5,284 |
| 5300-0108 | Light bar Code 3 model MX7100-ALRC-724 (PR) 18" Long. Location: At angle behind main light bar with front corners of bars even with outside edge of main bar. | $1,282 |
| 5300-0110 | Light bar Whelen Freedom model FN72QLED 72" LED with MK8H high mounts. Includes (12) red LED and (2) white LED. N/A INTL Chassis. Location: Centered on the front cab roof. | $5,700 |
| 5300-0111 | Whelen Mini-Freedom LED side facing light bars (PR) model FT8RRRRF 24" with MK8H high mounts. Location: [#LOC]. Lens colors: Clear. | $4,604 |
| 5300-0113 | Light bar Whelen Freedom model FL2RRRRF 72" LED with MKEZ7 mounts. Includes (10) red LEDs and (4) blue LEDs. N/A INTL Chassis. Location: Centered on the front cab roof. | $5,416 |
| 5300-0117 | Light bar Code 3 model 729A (PR) 29" long. Red upper / clear lower lens. Location: [#LOC] | $3,657 |
| 5300-0118 | Light bar Code 3 MX model 769A with R/W/W/W/R upper lenses and clear lower lenses. Upper deck contains (6) rotators and 3-M Opticom. Lower deck contains intersection sweeps (6) red LED warning and (4) white LED warning. Location: Centered on the front cab roof. | $7,572 |
| 5300-0125 | Light bar Whelen Freedom model FN82QLED 82" LED with MKEZ7 mounts and clear lenses. Includes (12) red (2) white LEDs and pre-wire for Opticom. N/A commercial Chassis. Location: Centered on the front cab roof | $5,243 |
| 5300-0126 | Light bar Whelen Freedom model FN72VLED 72" LED with 795H Opticom (12) red LEDs (2) clear LEDs and MKEZ7 mounts. N/A INTL Chassis or Vista roofs with front facing windows. Location: Centered on the front cab roof. | $8,314 |
| 5300-0128 | Federal ADX7250 LED Light bar 72". Includes (12) Solaris 6-LED red reflectors (4) Solaris 9-LED red reflectors and (12) Solaris 6-LED white reflectors. Includes (2) flashers (1) for red LEDs and (1) for white LEDs. | $5,032 |
| 5300-0129 | Light bar Federal Signal ADX2205 LED (PR). Location: [#LOC] | $5,489 |
| 5300-0130 | Light bar Whelen Freedom model FN82VLED 82" LED with 3M Opticom and MKEZ7 mounts. N/A INTL Chassis or Vista roofs with front facing windows. Location: Centered on the front cab roof | $6,489 |
| 5300-0131 | Light bar Whelen model FFX2068 19" LED. Location: Centered front of cab below windshield | $1,741 |
| 5300-0137 | Light bar Whelen Freedom model FN72VLED 72" LED with Opticom and MKEZ7 mounts. Includes (10) red LED and (2) white LED. N/A INTL Chassis. Location: Centered on the front cab roof. | $7,701 |
| 5300-0138 | Light bar package Federal Signal Escape LED (5) bar package. Includes: (1) 40'' LED front bar w/ Opticom (2) diagonal 26'' LED bars and (2) 28'' side LED bars. | $12,073 |
| 5300-0140 | Light bar Whelen Freedom model FN72QLED 72" LED with MK8 high mounts and clear lenses. Includes (10) red LED and (4) white LED. N/A INTL Chassis. Location: Centered on the front cab roof. | $5,706 |

| Item No. | Description | |
|---|---|---|
| 5300-0142 | Light bar Federal Signal JetStream 60" LED. Red/White Solaris reflectors with clear domes. NFPA Compliant does not require 2 addl side facing bars. Location: Centered on the front cab roof. | $2,928 |
| 5300-0144 | Light bar Whelen Edge model 9M387NQ 72" with MKEZ7 mounts pre-wire for Opticom and without rear facing strobes. N/A on INTL Chassis. Location: Centered on the front cab roof | $3,359 |
| 5300-0145 | Federal ADX7204 LED Lightbar 72". Includes (12) Solaris 9-LED red reflectors and Opticom. Location: Centered on the front cab roof. | $6,097 |
| 5300-0148 | Light bar Whelen model 9MMEDFFD 28 1/4" strobe with MK9 mounts (PR). Lense colors to be RRCR (front to rear). Location: [#LOC] | $2,852 |
| 5300-0151 | Light bar Whelen Freedom model FN66VLED 66" with MKEZ7 mounts. All LED light bar. Location: Centered on the front cab roof | $3,959 |
| 5300-0154 | Light bar Federal Signal JetStream 60'' LED. Red Solaris reflectors and red domes with clear center and 3M 792 Opticom. NFPA Compliant does not require 2 addl side facing bars. Location: Centered on the front cab roof | $7,079 |
| 5300-0155 | Federal ADX5283 LED Lightbar 52" with clear domes. Includes (16) Solaris 6-LED red reflectors (4) Solaris 6-LED white reflectors TCL and Opticom. Includes (2) flashers (1) for red LEDs and (1) for white LEDs. | $6,553 |
| 5300-0157 | Whelen Mini-Freedom LED light bars (PR) model FNMINI 24" with clear lenses and MKEZ7 mounts. Location: [#LOC]. | $4,592 |
| 5300-0158 | Light bar Whelen Freedom model FN72QLED 72" LED with 3M Opticom clear lenses and MKEZ7 mounts. N/A INTL Chassis. Location: Centered on the front cab roof. | $6,565 |
| 5300-0159 | Light bar Federal Signal ADX7202 72" with (6) red (2) white Solaris LED reflectors and 3M Opticom. Location: Centered on the front cab roof | $5,547 |
| 5300-0160 | Light bar Federal Signal JetSolaris 60" LED. Red Solaris reflectors with center traffic clearing light. NFPA compliant does not require 2 addl side facing bars. Location: Centered on the front cab roof. | $2,849 |
| 5300-0161 | Light bar Whelen Freedom model FN72VLED 72" LED with Opticom and MKEZ7 mounts. Includes (10) red LED (2) white LED and (2) green LED. N/A INTL Chassis. Location: Centered on the front cab roof. | $8,540 |
| 5300-0162 | Whelen Mini-Freedom LED side facing light bars (PR) model FT8RARRF driver and FT8RRARF officer 24" with MKEZ7 mounts. Location: [#LOC]. Lense colors: Clear. | $4,399 |
| 5300-0163 | Light bar Whelen Freedom model FN72VLED 72" LED with offset Opticom and MKEZ7 mounts. N/A INTL Chassis or Vista roofs with front facing windows. Location: Centered on the front cab roof. | $6,795 |
| 5300-0164 | Light bar package Federal Signal Escape LED (5) bar package. Includes: (1) 40'' LED front bar (RRWRR) (2) diagonal 26'' LED bars (RWR) and (2) 28'' side LED bars (RRR). | $9,300 |
| 5300-0166 | Light bar Whelen Freedom model FN60VLED 60" LED with MKEZ7 mounts. N/A on Vista roofs with front facing windows. Location: Centered on the front cab roof | $5,096 |
| 5300-0167 | Whelen Mini-Freedom LED side facing light bars (PR) model FT8RRRRF 28.25" with MKEZ7 mounts. Location: [#LOC]. Lense colors: Clear. | $5,554 |
| 5300-0168 | Whelen Mini-Freedom LED side facing light bars (PR) model FT8RRRRF 24" with MKEZ7 mounts. Location: [#LOC]. Lens colors: Red. | $4,399 |
| 5300-0169 | Light bar Whelen Freedom model FN72QLED 72" LED with red lenses and MKEZ7 mounts. Includes (8) red LED and (2) white LED. N/A INTL Chassis. Location: Centered on the front cab roof. | $4,512 |
| 5300-0171 | Light bar Federal Signal Aerodynic ADL5202 52" with driver red and officer blue lenses. Location: Centered on the front cab roof. | $1,515 |
| 5300-0173 | Light bar Whelen Freedom model FN72VLED 72" LED with MK8 high mounts. Includes (12) red LED (2) amber LED and (4) white LED. N/A INTL Chassis or Vista roofs with front facing windows. Location: Centered on the front cab roof. | $6,582 |
| 5300-0174 | Light bar Whelen Freedom model FN82VLED 82" LED with MKEZ7 mounts and red lenses. Includes (1) driver forward facing steady burn to meet California law. N/A INTL Chassis or Vista roofs with front facing windows. Location: Centered on the front cab roof | $4,794 |
| 5300-0176 | Light bar Whelen Freedom model FN72QLED 72" LED with MK8 high mounts. N/A INTL Chassis. Location: Centered on the front cab roof. | $4,060 |
| 5300-0179 | Light bar Federal Signal JLX21 LED red/blue(PR). Locate blue forward if side facing. Location: [#LOC] | $2,505 |
| 5300-0184 | Whelen Mini-Freedom LED side facing light bars (PR) model FT8RCCRF 28.25" with R/C/C/R lenses and MKEZ7 mounts. Location: [#LOC] | $4,365 |
| 5300-0185 | Light bar Whelen Freedom model FN72QLED 72" LED with clear lenses MKEZ7 mounts and pre-wire for 3M opticom. Includes (8) red LED and (2) white LED. N/A INTL Chassis. Location: Centered on the front cab roof | $4,594 |
| 5300-0187 | Light bar Whelen Freedom model FN72QLED 72" LED with clear lenses and MKH8 high mounts. Includes (8) red LED and (2) white LED. N/A INTL Chassis. Location: Centered on the front cab roof | $4,557 |
| 5300-0188 | Light bar Whelen Freedom model FN72VLED 72" LED with Opticom and MK8 high mounts. N/A INTL Chassis or Vista roofs with front facing windows. Location: Centered on the front cab roof. | $6,842 |

| Item No. | Description | |
|---|---|---|
| 5300-0190 | Light bar Whelen Freedom model FN72QLED 72" LED with Opticom and MK8 high mounts. Includes (6) red LED (4) Blue LED and (2) white LED. N/A INTL Chassis. Location: Centered on the front cab roof. | $7,716 |
| 5300-0192 | Light bar Code 3 Model XP9588NFPA1 88" LED. All red with clear lenses. Not available on commercial cabs. Location: Centered on the front cab roof. | $5,028 |
| 5300-0193 | Code3 model XP9501NFPA1 (PR) red LED with clear domes. Location: [#LOC]. | $2,136 |
| 5300-0195 | Light bar Federal Signal JetStream 60" LED. Red driver/Blue officer Solaris reflectors. Location: Centered on the front cab roof | $2,425 |
| 5300-0197 | Light bar Whelen Freedom model FN72QLED 72" LED with GTT Opticom red lenses and MKH8 high mounts. N/A INTL Chassis. Location: Centered on the front cab roof. | $6,617 |
| 5300-0198 | Light bar Federal Signal ADX2215-SMV LED side facing (PR) with driver blue forward/red rearward and officer red forward/blue rearward facing lenses. Location: [#LOC]. | $4,499 |
| 5300-0199 | Light bar Whelen Freedom model FL2RRRR 72" LED with Opticom and MKEZ7 mounts. Includes (12) red LED. N/A INTL Chassis. Location: Centered on the front cab roof. | $7,673 |
| 5300-0202 | Light bar Weldon Aero Maxx II 59" LED. NFPA Compliant does not require 2 addl side facing bars. Location: Centered on the front cab roof | $3,151 |
| 5300-0203 | Light bar Whelen Freedom model FN72QLED 72" LED with 3M 795H Opticom (10) red LEDs (2) clear LEDs and MK8 high mounts. For use with front vista windows. Location: Centered on the front cab roof. | $7,674 |
| 5300-0204 | Federal ADX7262 LED Lightbar 72" with clear lenses. Includes (12) Solaris 6-LED red reflectors (8) Solaris 6-LED blue reflectors (4) Solaris 9-LED red reflectors and a 3M Opticom. Includes (2) flashers (1) for red LEDs and (1) for blue LEDs. | $6,132 |
| 5300-0205 | Whelen Mini-Freedom LED side facing light bars (PR) model FT8CRRCF 28.25" with CRRC lenses and MKEZ7 mounts. Location: [#LOC]. | $4,365 |
| 5300-0206 | Light bar package Whelen 4500 LED (5) bar package. Includes: (1) 40'' LED front bar w/ Opticom (2) diagonal 24'' LED bars and (2) 28'' side LED bars. | $13,608 |
| 5300-0207 | Federal ADX7250 LED Lightbar 72". Includes (12) Solaris 6-LED red reflectors (4) Solaris 9-LED red reflectors and (10) Solaris 6-LED white reflectors and Opticom. Includes (2) flashers (1) for red LEDs and (1) for white LEDs. | $7,620 |
| 5300-0209 | Federal ADX7265 LED Lightbar 72". Includes (10) Solaris 6-LED red reflectors (10) Solaris 6-LED blue reflectors (4) Solaris 9-LED red reflectors and a 3M Opticom. Includes (2) flashers (1) for red LEDs and (1) for blue LEDs. | $6,132 |
| 5300-0211 | Light bar Whelen Freedom model FN60QLED 60" LED with MKEZ7 mounts. Includes (8) red (2) white and (2) amber modules. Location: Centered on the front cab roof | $5,193 |
| 5300-0212 | Light bar Whelen Freedom model FN72VLED 72" LED with MKEZ7 mounts. Includes (10) red LED and (4) white LED. N/A INTL Chassis. Location: Centered on the front cab roof. | $5,280 |
| 5300-0213 | Light bar Code 3 MX model 769NFPA1 with Opticom. Upper deck contains 5 rotators w/ red lenses. Lower deck contains 795H Opticom and intersection sweeps w/clear lenses. Location: Centered on the front cab roof. | $3,412 |
| 5300-0214 | Light bar Whelen Freedom model FN72QLED 72" LED with GTT Opticom clear lenses and MKH8 high mounts. N/A INTL Chassis. Location: Centered on the front cab roof | $6,617 |
| 5300-0215 | Light bar Whelen Freedom model FL2RRRRF 72" LED with MK8H high mounts. Includes (10) red LEDs and (4) blue LEDs. N/A INTL Chassis. Location: Centered on the front cab roof. | $5,468 |
| 5300-0216 | Light bar Whelen Freedom 72" LED with (8) red LEDs (2) white LEDs side facing LR11 alley lights 3M Opticom clear lenses and MKEZ7 mounts. N/A INTL Chassis. Location: Centered on the front cab roof | $6,905 |
| 5300-0217 | Light bar Federal Signal AeroDynic ADX7205 72" with 12 red Solaris LED reflectors and 2 traffic clearing lts. Location: Centered on the front cab roof. | $3,718 |
| 5300-0219 | Light bar Whelen Freedom model FL2RRRR 72" LED with MKEZ7 mounts and clear lenses. Includes (12) red LEDs (2) clear LEDs and GTT Opticom. N/A INTL Chassis and vista cabs. Location: Centered on the front cab roof. | $6,756 |
| 5300-0232 | Light bar Code 3 Excalibur model X69A. Upper deck contains (8) OPX-6 red LED modules and (1) LEDX modules in the center. Lower deck contains (10) OPX-6 red LED modules with a center mounted N-3 emitter. Lens color: Clear. Location: Centered on the front cab roof. | $5,998 |
| 5300-0233 | Light bar Code 3 Excalibur 36". Upper contains (6) OPX-6 red LED modules. Lower contains (6) OPX-6 red LED modules. Lens color clear. Location: [#LOC]. | $8,212 |
| 5300-0237 | Light bar Whelen Freedom model FN66QLED 66" with 3M 9592 Opticom (switched on dash panel) and MKEZ7 mounts. All LED light bar without rear facing LEDs. Driver side red lights and officer side to be blue (standard white center) Location: Centered on the front cab roof. | $5,865 |
| 5300-0240 | Whelen Justice model JE2NFPA 56" with MKEZ7 mounts. All LED (forward facing) light bar. | $667 |
| 5300-0243 | Light bar Whelen Freedom model FN82QLED 82" LED with clear lenses Opticom and MKEZ7 mounts. Includes (7) red LED and (7) blue LED. N/A INTL Chassis. Location: Centered on the front cab roof. | $6,651 |
| 5300-0244 | Whelen Mini-Freedom LED side facing light bars (PR) model FT8RRRRF driver and FT8BBBBF officer 28.25" with MKEZ7 mounts. Location: [#LOC]. Lense colors: Clear. | $4,399 |

| Item No. | Description | |
|---|---|---|
| 5300-0246 | Whelen Mini-Freedom LED light bars (PR) model FT8RCRCF 28.25" with clear lenses and MKEZ7 mounts. Location: [#LOC]. | $4,592 |
| 5300-0250 | Light bar package Whelen 4500 red/blue LED (5) bar package. Includes: (1) 40'' LED front bar w/ Opticom (2) diagonal 24'' LED bars and (2) 28'' side LED bars. | $13,608 |
| 5300-0251 | Light bar Whelen Freedom model FN72QLED 72" LED with clear lenses Opticom and MKEZ7 mounts. Includes (7) red LED (3) blue LED and (2) white LED. N/A INTL Chassis. Location: Centered on the front cab roof. | $7,013 |
| 5300-0252 | Light bar Whelen Freedom model FN72QLED 72" LED red/blue with MKEZ7 mounts and clear lenses. N/A INTL Chassis. Location: Centered on the front cab roof | $4,060 |
| 5300-0253 | Whelen Mini-Freedom LED side facing light bars (PR) model FT8RRBBF driver and FT8BBRRF officer 28.25" with MKEZ7 mounts. Location: [#LOC]. Lense colors: Clear. | $4,399 |
| 5300-0255 | Light bar Federal Signal JLX2133-CNFPA LED (PR) with clear lenses. Location: [#LOC]. | $2,304 |
| 5300-0257 | Light bar Whelen Freedom model FN72QLED 72" LED with MKEZ7 mounts. Includes (1) driver forward facing steady burn to meet California law. N/A INTL Chassis. Location: Centered on the front cab roof. | $4,060 |
| 5300-0260 | Light bar Whelen Freedom 66" LED with 3M Opticom red lenses and MKEZ7 mounts. Includes (10) red LED and (2) LR11 dual alley lights. Location: Centered on the front cab roof. | $6,408 |
| 5300-0261 | Light bar Federal Signal Legend. (2) 24" light bars LED side facing only. Lenses color: clear. Location: [#LOC]. | $3,701 |
| 5300-0263 | Light bar Federal Signal Legend 61" LED with alley lights clear lenses and red diodes. Location: Centered on the front cab roof | $3,301 |
| 5300-0264 | Whelen Mini-Freedom LED side facing light bars (PR) model FT8RCRRF driver and FT8BCBBF officer 24" with MKEZ7 mounts. Location: each side over rear cab doors. Lense colors: Clear. | $4,365 |
| 5300-0265 | Whelen Mini-Freedom LED side facing light bars (PR) model FT8RCRRF driver and FT8BCBBF officer 24" with MKEZ7 mounts. Location: front cab corners. Lense colors: Clear. | $4,365 |
| 5300-0267 | Light bar Whelen Justice model JE2NFPA 56" LED with clear lenses and MKEZ7 mounts. N/A on Vista roofs with front facing windows. Includes (4) red corner facing LIN6 LED lights (6) forward facing CON3 Linear LED lights; (4) red (2) white. Location: Centered on the front cab roof. | $2,423 |
| 5300-0269 | Light bar Whelen Freedom model FN60VLED 60" LED with clear lenses and MKEZ7 mounts. Includes (6) red (2) white (4) blue modules and GTT Opticom. Location: Centered on the front cab roof. | $6,205 |
| 5300-0270 | Light bar Whelen model 45B38 38" LED with Opticom. Location: Centered front of cab below windshield | $2,966 |
| 5300-0271 | Light bar Whelen Freedom model FN72QLED 72" LED red/blue with MK8 high mounts. N/A INTL Chassis. Location: Centered on the front cab roof | $4,113 |
| 5300-0277 | Light bar Whelen Freedom model FN72VLED 72" LED with MK8 mounts. N/A INTL Chassis or Vista roofs with front facing windows. Location: Centered on the front cab roof. | $4,112 |
| 5300-0278 | Light bar Whelen 4500 LED red/clear (PR) side facing. Includes: (2) 28'' side LED bars. Location: [#LOC]. | $5,101 |
| 5300-0279 | Light bar Whelen 4500 LED red/clear (PR). Includes: (2) 24'' LED bars. Location: [#LOC]. | $4,873 |
| 5300-0284 | Light bar Whelen Freedom model FN82VLED 82" LED with MKEZ7 mounts and clear lenses. Includes (12) red (4) white LEDs. N/A commercial Chassis. Location: Centered on the front cab roof | $6,067 |
| 5300-0285 | Whelen Mini-Freedom LED side facing light bars (PR) model FT8RRRRF 24" with MK8H high mounts. Location: [#LOC]. Lense colors: Red. | $4,604 |
| 5300-0286 | Light bar Whelen Freedom model FN72QLED 72" LED with MK8 high mounts. Includes (14) red LED with red lenses. N/A INTL Chassis. Location: Centered on the front cab roof. | $5,706 |
| 5300-0287 | Light bar Whelen Freedom model FN82VLED 82" LED with MKEZ7 mounts and clear lenses. Includes (14) red (4) white LEDs. N/A commercial Chassis. Location: Centered on the front cab roof | $6,418 |
| 5300-0288 | Light bar Federal Signal JetStream 60" LED. Red/Blue Solaris reflectors with clear domes. NFPA Compliant does not require 2 addl side facing bars. Location: Centered on the front cab roof | $2,928 |
| 5300-0290 | Whelen Mini-Freedom LED light bars (PR) model FT8 28.25" with clear lenses and MKEZ7 mounts. Includes: (4) corner mounted red LED (2) split red/white forward facing LED flashing in X pattern and (1) end mounted red LED Location: [#LOC]. | $5,604 |
| 5300-0291 | Whelen Mini-Freedom LED light bars (PR) model FT8 28.25" with clear lenses and MK8H high mounts. Includes: (4)corner mounted red LED (2) split red/white forward facing LED flashing in X pattern and (1) end mounted red LED Location: [#LOC]. | $5,654 |
| 5300-0292 | Light bar Whelen Freedom model FN72QLED 72" LED with MK8 high mounts. Includes (8) red LED (2) split red/white flashing in X pattern and (4) white LED. N/A INTL Chassis. Location: Centered on the front cab roof. | $5,976 |
| 5300-0293 | Light bar Federal Signal Legend 61" LED with clear lenses and red diodes. Location: Centered on the front cab roof | $3,983 |
| 5300-0294 | Light bar Whelen Freedom model FN72QLED 72" LED with MK8H mounts. Centered on the front cab roof. | $4,005 |
| 5300-0295 | Light bar Whelen Freedom model FN72QLED 72" LED with 3M Opticom clear lenses and MKH8 mounts. N/A INTL Chassis. Location: Centered on the front cab roof. | $6,565 |

| Item No. | Description | |
|---|---|---|
| 5300-0297 | Light bar Whelen Freedom model FN66QLED 66" with MKEZ7 mounts. All LED light bar without rear facing LEDs. Driver side red LED officer blue LED. Location: Centered on the front cab roof. | $3,959 |
| 5300-0298 | Light bar Whelen Freedom model FN72QLED 72" LED with MKEZ7 mounts. Location: Centered on the front cab roof. | $4,060 |
| 5300-0299 | Light bar Whelen 4500 Series 20" LED (model 45B20). Location: Centered front of cab below windshield. | $1,807 |
| 5300-0300 | Light bar Whelen Freedom model FN72QLED 72" LED with 3M Opticom clear lenses and MKEZ7 mounts. N/A INTL Chassis. Location: Centered on the front cab roof. | $6,565 |
| 5300-0301 | Light bar Whelen Freedom model FN72QLED 72" LED with Opticom and MK8 high mounts. Includes (8) red LED and (4) white LED with red/clear lenses. N/A INTL Chassis. Location: Centered on the front cab roof. | $6,372 |
| 5300-0302 | Light bar Federal Signal Split Vision VSLR8-NFPA1. Two (2) 26.5" 4-pod light bars w/ (3) red and (1) multi-color pods on each bar with red/clear lenses. Location: [#LOC]. | $4,200 |
| 5300-0303 | Light bar Whelen Freedom model FN66QLED 66" with MKEZ7 mounts. Includes (10) red LED with red lenses and (2) white LED with clear lenses. Location: Centered on the front cab roof. | $4,724 |
| 5300-0304 | Light bar Whelen Freedom model FN72QLED 72" LED with MK8 high mounts. Includes (5) red LED (5) blue and (4) white LED . N/A INTL Chassis. Location: Centered on the front cab roof. | $5,706 |
| 5300-0305 | Light bar Whelen Freedom model FN55QLED 55" LED with driver red/officer blue LEDS takedown lights and MKEZ7 mounts. Location: Centered on the front cab roof. | $3,886 |
| 5300-0306 | Light bar Federal Signal JetSolaris 60" LED. Red and blue Solaris reflectors with center traffic clearing light. NFPA Compliant does not require 2 addl side facing bars. Location: Centered on the front body mounted to the roof with no upper body or mounted on a bracket in front of the body with 13" upper body. | $2,849 |
| 5300-0307 | Light bar Whelen Freedom model FN72QLED 72" LED with clear lenses Opticom and MKEZ7 mounts. Includes (10) red LED and (2) white LED. N/A INTL Chassis. Location: Centered on the front cab roof. | $7,013 |
| 5300-0310 | Light bar Whelen Freedom model FN72VLED 72" LED with Opticom and MK8H high mounts. Includes (10) red LED (2) white LED and (2) blue LED. N/A INTL Chassis. Location: Centered on the front cab roof. | $6,948 |
| 5300-0313 | Light bar Federal Signal ADX2205 LED (PR) red/clear. State of Maryland only. Location: [#LOC]. | $5,489 |
| 5300-0314 | Light bar Federal Signal Legend. (2) 24" light bars LED. Lenses color: clear. (1) Model number LGD24Z-00019 and (1) model number LGD24Z-00020. Location: [#LOC]. | $2,162 |
| 5300-0315 | Whelen Mini-Freedom LED side facing light bars (PR) model FT8BRBRF driver and FT8RBRBF officer 28.25" with MKEZ7 mounts. Location: [#LOC]. Lense colors: Clear. | $4,399 |
| 5300-0317 | Light bar Whelen Freedom model FN55QLED 55" with GTT 795H Opticom and MKEZ7 mounts. All LED light bar without rear facing LEDs. Location:[#LOC]. | $5,127 |
| 5300-0318 | Light bar risers (PR) for the light bars installed on the top of the cab to insure 360 degree visibility. The riser shall raise the as mounted light bar(s) approximately 4" to prevent interference with the brow lighting (if so equipped) and ensure 360 degree visibility is maintained. | $201 |
| 5300-0319 | Light bar Whelen Freedom model FN60VLED 60" LED with MK8H mounts. N/A on Vista roofs with front facing windows. Location: Centered on the front cab roof | $5,162 |
| 5300-0322 | Light bar made from (2) PowerArc model M90FK-RC light heads. Each light head houses (12) red LEDs (24 total) with clear lenses and a polished stainless steel flange. Includes oscillating technology. Both light heads when mounted together to make light bar are approximately 20" in length. Location: centered front of cab below windshield. | $1,729 |
| 5300-0325 | Light bar Whelen Freedom model FN72VLED 72" LED with 795H Opticom (12) red LEDs (2) clear LEDs and MK8H mounts. N/A INTL Chassis or Vista roofs with front facing windows. Location: Centered on the front cab roof. | $8,359 |
| 5300-0326 | Light bar Whelen Freedom model FN72QLED 72" LED with GTT Opticom clear lenses and MK8H mounts. Includes (3) red LED (3) blue LED and (2) white LED. N/A INTL Chassis. Location: Centered on the front cab roof. | $6,615 |
| 5300-0327 | Light bar Whelen Freedom model FN82QLED 82" LED with MKEZ7 mounts and clear lenses. Includes (12) red (2) white LEDs. N/A commercial Chassis. Location: Centered on the front cab roof | $5,017 |
| 5300-0328 | Light bar Whelen Freedom model FN72QLED 72" LED with MK8 high mounts. Includes (8) red LED (2) blue LED and (4) white LED. N/A INTL Chassis. Location: Centered on the front cab roof. | $5,706 |
| 5300-0329 | Light bar Whelen Freedom model FN55QLED 55" LED with driver red/officer blue LEDS takedown lights and MKEZ7 mounts. Location: Centered on the front cab roof. | $3,886 |
| 5300-0330 | Light bar Whelen Freedom model FN72QLED 72" LED with clear lenses and MKE7 mounts. Includes (10) red LED and (4) white LED. N/A INTL Chassis. Location: Centered on the front cab roof. | $5,706 |
| 5300-0331 | Light bar Federal Signal JetSolaris 60" LED. Clear/white Solaris reflectors with red domes. NFPA compliant. Does not require 2 addl side facing bars. Location: Centered on the front cab roof. | $2,765 |
| 5300-0333 | Whelen Mini-Freedom LED side facing light bars (PR) model FT8RBRP 24" with MKEZ7 mounts. Location: [#LOC]. Lens color: Red/Blue. | $4,399 |

| Item No. | Description | |
|---|---|---|
| 5300-0334 | Light bar Whelen Freedom model FN72QLED 72" LED GTT Opticom and clear lenses MKEZ7 mounts. Includes (8) red LED and (2) white LED. N/A INTL Chassis. Location: Centered on the front cab roof | $5,796 |
| 5300-0335 | Federal ADX7204 LED lightbar 72". Includes (12) Solaris 9-LED red reflectors with clear lenses and Opticom. Location: Centered on the front cab roof. | $6,097 |
| 5300-0336 | Federal ADX7204 LED lightbar 72". Includes (12) Solaris 9-LED red reflectors with lens arrangement of R/C/R/C/R/C/C/C/C/R/C/R/C/R and Opticom (with switch accessible to driver). Location: Centered on the front cab roof. | $6,097 |
| 5300-0337 | Light bar Whelen Freedom model FN72QLED 72" LED with MK8H high mounts. Includes (8) red LED and (6) white LED. N/A INTL Chassis. Location: Centered on the front cab roof. | $5,353 |
| 5300-0339 | Light bar Federal Signal JetSolaris 72" LED. Red and White Solaris reflectors with clear domes. NFPA compliant. Does not require 2 addl side facing bars. Location: Centered on the front cab roof. | $2,629 |
| 5300-0343 | Light bar Whelen Freedom model FN72QLED 72" LED with clear lenses MKEZ7 mounts and pre-wire for 3M opticom. Includes (3) red LED (3) blue LED and (2) white LED. N/A INTL Chassis. Location: Centered on the front cab roof | $3,879 |
| 5300-0344 | Light bar Whelen Justice model JE0NFPA 62" LED with clear lenses and MKEZ7 mounts. N/A on Vista roofs with front facing windows. Includes (4) red corner facing LIN6 LED lights (6) forward facing CON3 Linear LED lights; (4) red (2) white. Location: Centered on the front cab roof. | $2,546 |
| 5300-0345 | Light bar Federal Signal Legend 70" LED with clear lenses and red diodes. Location: Centered on the front cab roof. | $3,562 |
| 5300-0346 | Whelen Mini-Freedom LED light bars (PR) model FNMINI 24" with clear lenses and MKEZ7 mounts. Includes red/clear/blue driver and blue/clear/red officer. Location: [#LOC]. | $4,592 |
| 5300-0347 | Light bars Federal Signal One (1) center 3 pod Vision SLR model VSLR3S-NFPA1 LED light bar on 4" tall channel riser. One (1) Vision SLR model VSLR85-NFPA1 side light bars containing two (2) 4 pod LED light bars. Lenses to be R/R/W/R R/W/R R/W/R/R. Location: "V" centered on the front cab roof with the center pod mounted on 4" tall channel risers to accommodate an Opticom below (not included). | $6,232 |
| 5300-0349 | Light bar Whelen Freedom model FN72QLED 72" LED with clear lenses Opticom and MK8H high mounts. Includes (8) red LED (2) blue LED (2) white (2) LR11 takedown and 795H Opticom. N/A INTL Chassis. Location: Centered on the front cab roof. | $6,900 |
| 5300-0350 | Whelen Mini-Freedom LED side facing light bars (PR) model FT8RBRRF 28.25" with clear lenses and MK8H mounts. Location: [#LOC]. | $4,415 |
| 5300-0351 | Light bar Whelen Freedom model FN66QLED 66" LED with MK8 high mounts. Includes (13) red LED (7) blue and (2) white takedown LEDs. Location: centered on the front cab roof. | $6,939 |
| 5300-0352 | Whelen Mini-Freedom LED light bars (PR) red/blue 24" with clear lenses and MKEZ7 mounts. Location: [#LOC]. | $4,592 |
| 5300-0354 | Light bar Federal Signal Split Vision VSLR6. Two (2) 21" 3-pod light bars w/ (3) red pods on each bar with red lenses. Location: [#LOC]. | $3,552 |
| 5300-0355 | Light bar Federal Signal Split Vision VSLR6. Two (2) 21" 3-pod light bars w/ (2) red pods and (1) multi-color pod on each bar with red/clear lenses. Location: [#LOC]. | $3,552 |
| 5300-0357 | Light bar Federal Signal Vision VSLR60S-NFPA1. Includes (7) LED pods; (5) red (2) multi-color. Location: center cab roof. | $3,971 |
| 5300-0358 | Light bars Federal Signal Vision VSLR. One (1) center 21" 3 pod and two (2) side 26.5" 4 pod LED light bars. Lenses to be R/R/C/R R/C/R R/C/R/R. Location: "V" centered on the front cab roof. If equipped with front vista windows rear LED to be shut off. | $5,493 |
| 5300-0359 | Light bar Federal Signal Split Vision VSLR6. Two (2) 21" 3-pod light bars w/ (3) blue pods on each bar with blue lenses. Location: [#LOC]. | $3,552 |
| 5300-0360 | Light bar Federal Signal Split Vision VSLR6. Two (2) 21" 3-pod light bars w/ (2) red pods and (1) multi-color pod on each bar with R/C/R lenses. Pods 2 and 5 to have rear rotators programmed amber to rear white side and forward. Location: [#LOC]. | $3,886 |
| 5300-0361 | Light bar Federal Signal Split Vision VSLR6. Two (2) 21" 3-pod light bars w/ (2) blue pods and (1) multi-color pod on each bar with B/C/B lenses. Pods 2 and 5 to have rear rotators programmed amber to rear white side and forward. Location: [#LOC]. | $3,886 |
| 5300-0362 | Light bars Power Arc model VM2502GLP-1P LED (PR). Colors to be RBR RBR. Includes Golight on each bar. Location: [#LOC]. | $5,218 |
| 5300-0363 | Whelen Mini-Freedom LED side facing light bars (PR) model FT8RCCRF 28.25" with R/C/C/R lenses and MK8H mounts. Location: [#LOC]. | $4,415 |
| 5300-0365 | Light bars Federal Signal Vision VSLR. One (1) center 21" 3 pod and two (2) side 26.5" 4 pod LED light bars. Lenses to be R/C/R/R C/R/C R/R/C/R. Location: "V" centered on the front cab roof. If equipped with front vista windows rear LED to be shut off. | $5,493 |
| 5300-0366 | Light bars Federal Signal Vision VSLR. One (1) center 21" 3 pod and two (2) side 26.5" 4 pod LED light bars. Lenses to be R/R/C/R R/R/R R/C/R/R. Location: "V" centered on the front cab roof. If equipped with front vista windows rear LED to be shut off. | $5,493 |

| Item No. | Description | |
|---|---|---|
| 5300-0367 | Light bar Whelen Freedom model FN66QLED 66" with MKEZ7 mounts. (10) red and (2) white LED light bar without rear facing LEDs. Location: Centered on the front body mounted to the roof with no upper body or mounted on a bracket in front of the body with 13" upper body. | $4,802 |
| 5300-0368 | Light bar Federal Signal JetSolaris 60" LED. Red and blue Solaris reflectors reflectors with center traffic clearing light. NFPA compliant does not require 2 addl side facing bars. Location: Centered on the front cab roof. | $2,849 |
| 5300-0369 | Light bar Whelen Freedom model FN72QLED 72" LED with MK8H high mounts and red/clear lenses. Includes (12) red LED and (2) white LED. N/A INTL Chassis. Location: Centered on the front cab roof. | $5,700 |
| 5300-0370 | Light bar Federal Signal Split Vision VSLR8S-CFD2. Two (2) 26.5" 4-pod light bars w/driver side (3) red and (1) multi-color pods officer side (2) red (1) green and (1) multi-color pods with red/green/clear lenses. Location: [#LOC]. | $4,328 |
| 5300-0371 | Light bar Federal Signal Split Vision VSLR8S-CHI. Two (2) 26.5" 4-pod light bars w/driver side (3) red and (1) multi-color pods officer side (2) red (1) green and (1) multi-color pods with red and clear lenses. Location: [#LOC]. | $4,328 |
| 5300-0372 | Light bar Whelen Freedom 72" LED with 3M Opticom and MKEZ7 mounts. Includes (12) red LED and clear lenses. N/A INTL Chassis. Location: Centered on the front cab roof. | $6,648 |
| 5300-0373 | Light bar Code 3 model 2758NFPA1CC LED red with clear lenses. Location: Centered on the front cab roof. | $3,242 |
| 5300-0374 | Light bar Code 3 LED model 2722NFPA1 (PR) 22" Long. All red with clear lens. Location:[#LOC]. | $3,797 |
| 5300-0375 | Light bar Federal Signal Split Vision VSLR8-NFPA4. Two (2) 26.5" 4-pod light bars w/ (2) red and (2) multi-color pods on each bar with clear lenses. Location: [#LOC]. | $5,247 |
| 5300-0376 | Light bar Federal Signal Split Vision VSLR6-NFPA1. Two (2) 21" 3-pod light bars w/ (2) red and (1) multi-color pods on each bar with clear lenses. Location: [#LOC]. | $3,946 |
| 5300-0379 | Light bar Whelen Freedom model FN72VLED 72" LED with MKEZ7 mounts. Includes (12) red LED and (2) white LED. N/A INTL Chassis. Location: Centered on the front cab roof. | $5,280 |
| 5300-0380 | Light bar Federal Signal JetSolaris 60" LED. Blue Solaris reflectors with clear domes. NFPA compliant. Does not require 2 addl side facing bars. Location: Centered on the front cab roof. | $2,765 |
| 5300-0381 | Light bar Federal Signal ADX2205 LED with clear lenses(PR). Location: [#LOC] | $5,489 |
| 5300-0382 | Light bar Federal Signal Split Vision VSLR8S-CFD2. Two (2) 26.5" 4-pod light bars w/ (3) red with red domes and (1) multi-color pod with clear dome on driver and (2) red with red domes (1) multi-color with clear dome and (1) green with clear dome. Location: [#LOC]. | $4,595 |
| 5300-0383 | Light bar Federal Signal JetStream JLX54HH-00011 with all lenses clear 54" LED. Red Solaris reflectors each side and (2) center TCL lights. Location: Centered on the front cab roof. | $2,909 |
| 5300-0384 | Light bar Code 3 model XL5000 74" with R/R/R/B lenses. Location: Centered on the front cab roof. | $2,036 |
| 5300-0385 | Light bar Whelen Freedom model FN72QLED 72" LED with MKEZ7 mounts. Includes (8) red LED (2) white LED and (2) dual LR11 LED take down lights. N/A INTL Chassis. Location: Centered on the front vista cab roof. | $4,996 |
| 5300-0386 | Light bar Code 3 model 21TR 69". Includes: (4) corner mounted red TRS6 LED modules (2) side facing red TRS3 LED modules and (7) forward facing red LED modules R/R/W/R/W/R/R w/clear lenses. Location: Centered on the front cab roof. | $2,419 |
| 5300-0387 | Whelen Mini-Freedom LED light bars (PR) model FT8RRRRF 28.25" with MK8H high mounts. Location: [#LOC]. Lense colors: Clear. | $4,415 |
| 5300-0388 | Light bar Whelen Freedom model FN72QLED 72" LED with clear lenses and MKEZ7 mounts. Includes (8) red LED and (4) white LED. N/A INTL Chassis. Location: Centered on the front cab roof. | $4,847 |
| 5300-0389 | Light bar Whelen Freedom model FN66QLED 66" with MK8H high mounts. All LED light bar without rear facing LEDs. Location: Centered on the front cab roof. | $4,007 |
| 5300-0390 | Light bar Whelen Freedom model FN72QLED 72" LED with MK8 high mounts. Includes (8) red LED (2) blue LED and (2) white LED. N/A INTL Chassis. Location: Centered on the front cab roof. | $4,628 |
| 5300-0391 | Light bar Federal Signal Split Vision VSLR8. Two (2) 26.5" 4-pod light bars. Driver w/ (2) red and (2) multi-color pods with clear lenses; officer w/ (3) red and (1) multi-color pods with clear lenses. Location: [#LOC]. | $5,247 |
| 5300-0393 | Light bar Whelen Freedom model FN72VLED 72" LED with MKEZ7 mounts. Includes (10) red LED and (2) white LED. N/A INTL Chassis. Location: Centered on the front cab roof. | $4,708 |
| 5300-0394 | Light bar Whelen Freedom model FN88QLED 88" LED with MKEZ7 mounts and clear lenses. Includes (12) red and (4) white LEDs. N/A commercial Chassis. Location: Centered on the front cab roof | $6,253 |
| 5300-0395 | Whelen Mini-Freedom Rota-Beam LED light bars (PR) 24" with clear lenses and MKEZ7 mounts. Location: [#LOC]. | $5,956 |
| 5300-0396 | Light bar Whelen Freedom 72" LED with MK8 high mounts and clear lenses. Includes (5) red Rota-Beam LED (4) red LED and (4) white LED. N/A INTL Chassis. Location: Centered on the front cab roof. | $6,266 |
| 5300-0397 | Light bar Whelen Freedom model FN72QLED 72" LED with MKEZ7 mounts. Includes (10) red LED and (2) white LED. N/A INTL Chassis. Location: Centered on the front cab roof. | $4,905 |

| Item No. | Description | |
|---|---|---|
| 5300-0399 | Light bar Whelen Freedom model FN72QLED 72" LED with GTT Opticom clear lenses and MKEZ7 mounts. Includes (6) red LED (2) blue LED and (2) white LED. N/A INTL Chassis. Location: Centered on the front cab roof. | $6,708 |
| 5300-0400 | Light bar Whelen Freedom model FN72QLED 72" LED with GTT Opticom red lenses and MKEZ7 mounts. N/A INTL Chassis. Location: Centered on the front cab roof. | $6,565 |
| 5300-0401 | Light bar Whelen Freedom 72" LED with MKEZ7 mounts and clear lenses. Includes (6) Rota-Beam LED (4-red 2-white) (2) green LED (2) red LED (2) dual LR11 alley lights (2) LR11 take down lights and GTT 795H Opticom. N/A INTL Chassis. Location: Centered on the front cab roof. | $7,213 |
| 5300-0403 | Whelen Mini-Freedom Rota-Beam LED light bars (PR) 28.25" with R/C/R lenses (2) red and (1) white Rota-Beam LED lights and MK8H high mounts. Location: [#LOC]. | $5,732 |
| 5300-0404 | Light bar Whelen Freedom 72" LED with MK8 high mounts and red / clear lenses. Includes (6) red Rota-Beam LED (1) white Rota-Beam LED and (4) red LED. N/A INTL Chassis. Location: Centered on the front cab roof. | $5,834 |
| 5300-0405 | Whelen Mini-Freedom LED light bar package with MKEZ7 mounts. (1) model FT8RCCRF centered on front cab roof (1) FT8RRRRF each side front cab corner at 30 degree angle. Lense colors: Clear. | $5,665 |
| 5300-0406 | Light bar Whelen Freedom 72" LED with MK8H high mounts and clear lenses. Includes (6) red Rota-Beam LED (1) white Rota-Beam LED (2) red LED and (2) white LED. N/A INTL Chassis. Location: Centered on the front cab roof. | $6,080 |
| 5300-0407 | Light bar Whelen Freedom 60" LED with MK8 high mounts and clear lenses. Includes (6) red Rota-Beam LED (1) white Rota-Beam LED and (2) white LED. N/A INTL Chassis. Location: Centered on the front cab roof. | $5,584 |
| 5300-0408 | Light bar Federal Signal Legend 53" LED with clear lenses and red diodes. Location: Centered on the front cab roof | $3,205 |
| 5300-0409 | Light bar Whelen Freedom model FN55QLED 55" LED with MKEZ7 mounts. Location: Centered on the front cab roof. | $3,367 |
| 5300-0410 | Light bar Federal Signal JetSolaris 60" LED. Red Solaris reflectors with red domes. NFPA compliant. Does not require 2 addl side facing bars. Location: Centered on the front cab roof. | $2,765 |
| 5300-0411 | Light bar Whelen Freedom model FN82QLED 82" LED with clear lenses Opticom and MKEZ7 mounts. Includes (12) red LED and (2) white LED. N/A INTL Chassis. Location: Centered on the front cab roof. | $6,651 |
| 5300-0412 | Light bar Federal Signal Legend 70" LED with red/white diodes and clear lenses. Location: Centered on the front cab roof. | $4,213 |
| 5300-0413 | Light bar Federal Signal Navigator model NVG73-EONE 73" with (10) red and (2) white Quadraflare LED lights. Location: Centered on the front cab roof. | $3,426 |
| 5300-0414 | Light bar Federal Signal Legend. (2) 24" light bars LED. Lenses color: clear. (1) Model number LGD24Z-2655171 and (1) model number LGD24Z-2655292. Location: [#LOC]. | $2,162 |
| 5300-0415 | Light bar Federal Signal Navigator model NVG73-NFPA3 73" with (2) red SLR rotators (2) red / white SLR rotators and (4) red Quadraflare LED lights. Location: Centered on the front cab roof. | $3,821 |
| 5300-0416 | Whelen Mini-Freedom Rota-Beam LED light bars (PR) 24" with clear lenses and MK8H high mounts. Location: [#LOC]. | $6,012 |
| 5300-0417 | Light bar Whelen Freedom 72" LED with MKEZ7 mounts and clear lenses. Includes (5) red Rota-Beam LED and (2) white Rota-Beam LED. N/A INTL Chassis. Location: Centered on the front cab roof. | $5,037 |
| 5300-0418 | Whelen Ultra Freedom Micro Edge LED (PR) model MCFLED25 clear lens with red LEDs. Location [#LOC]. When used at front cab corners requires additional lighting to meet NFPA. | $2,020 |
| 5300-0419 | Whelen Mini-Freedom LED light bars (PR) model FNMINI 24" with clear lenses and low profile MK9 mounts. Location: [#LOC]. | $4,592 |
| 5300-0421 | Light bar Whelen Freedom 72" LED with MKEZ7 mounts and clear lenses. Includes (8) red Rota-Beam LED and GTT 795H Opticom. N/A INTL Chassis. Location: Centered on the front cab roof. | $6,796 |
| 5300-0422 | Light bar Whelen Freedom model FN72VLED 72" LED with 795H Opticom and MKEZ7 mounts. Includes (6) red LED (4) blue LED and (2) white LED. N/A INTL Chassis. Location: Centered on the front cab roof. | $7,701 |
| 5300-0423 | Light bar Whelen Freedom model FN66VLED 66" with dual LR11 alley lights dual LR11 takedown lights and MKEZ7 mounts. All LED light bar. Location: Centered on the front cab roof | $4,333 |
| 5300-0424 | Light bar Whelen Freedom 72" LED with MKEZ7 mounts and red/clear lenses. Includes (8) red Rota-Beam LED and GTT 795H Opticom. N/A INTL Chassis. Location: Centered on the front cab roof. | $6,796 |
| 5300-0427 | Light bar Whelen Freedom model FN55VLED 55" LED with PE215 emitter (4) red driver LED (4) blue officer LED and MKEZ7 mounts and clear lenses. N/A with Vista roofs with front facing windows. Location: Centered on the front cab roof. | $4,307 |
| 5300-0428 | Light bar Whelen Freedom model FN66QLED 66" with MKEZ7 mounts. Red/blue/clear LED light bar without rear facing LEDs. Location: Centered on the front cab roof. | $3,959 |
| 5300-0429 | Light bar Whelen Freedom model FN72QLED 72" LED red/blue with MKEZ7 mounts and red/clear/blue lenses. N/A INTL Chassis. Location: Centered on the front cab roof | $4,060 |
| 5300-0430 | Light bar Power Arc model LED VM6004-3P 60" long. Lenses color: R/R/R/W/R/R/R Location: center front cab roof. | $3,592 |

| Item No. | Description | |
|---|---|---|
| 5300-0431 | Light bar Federal Signal Navigator model NVG25-NFPA3 LED (PR). Includes (3) QL64 red and (2) QL73 red in each bar with clear lenses. Location: [#LOC] | $3,553 |
| 5300-0432 | Light bar Federal Signal Navigator model NVG25 (PR). Includes (3) QL64 red and (2) QL73 red in each bar with red lenses. Location: [#LOC] | $3,553 |
| 5300-0433 | Light bar Federal Signal Navigator model NVG25-0001 (PR). Includes (2) SLR rotators red/white and (1) QL64 red in each bar with clear lenses. Location: [#LOC] | $3,491 |
| 5300-0436 | Light bar Federal Signal LPX70DS-NFPA1 70" LED with red and clear lenses. Location: Centered on the front cab roof | $2,232 |
| 5300-0438 | Light bar Federal Signal Navigator model NVG73-NFPA7 73" with (12) red Quadraflare LED lights. Location: Centered on the front cab roof. | $3,958 |
| 5300-0441 | Light bar Whelen Freedom model FN88VLED 88" LED with MKEZ7 mounts and clear lenses. Includes (10) red (6) white LEDs and (2) dual LR11 alley lights. N/A commercial Chassis. Location: Centered on the front cab roof | $6,522 |
| 5300-0442 | Light bar Whelen Freedom model FN72VLED 72" LED with 795H Opticom and MKEZ7 mounts. Includes (8) red LED and (4) blue LED. N/A INTL Chassis. Location: Centered on the front cab roof. | $7,701 |
| 5300-0443 | Light bar Federal Signal Navigator model NVG25-NFPA-D & -P LED (PR). Includes (2) QL64 red (1) QL64 split red/white and (1) QL73 red in each bar with clear lenses. Location: [#LOC] | $3,553 |
| 5300-0444 | Light bar Federal Signal Navigator model NVG73-FLNDRS 73" with (2) red SLR rotators (2) red/white SLR rotators (2) red/white Quadraflare LED and (2) blue Quadraflare LED lights. Location: Centered on the front cab roof. | $4,349 |
| 5300-0445 | Federal JLX7250-NFPA LED Light bar 72". Includes (8) red 6-LED reflectors (3) white 6-LED reflectors and (6) red 3-LED reflectors. The lenses shall be clear. No rear lighting. | $4,524 |
| 5300-0447 | Light bar Federal Signal LPX 53" LED with red/clear/blue lenses red diodes outer driver clear diodes center and blue diodes outer officer. Location: Centered on the front cab roof | $1,943 |
| 5300-0448 | Light bar Whelen Freedom model FN72VLED 72" LED with MK8H high mounts. Includes (11) red LED (2) white LED and (1) green LED. N/A INTL Chassis. Location: Centered on the front cab roof. | $5,104 |
| 5300-0449 | Light bar Whelen Freedom model FN72QLED 72" LED with 3M Opticom clear lenses (4) red LEDs' (2) blue LEDs' (2) clear LEDs' and MKEZ7 mounts. N/A INTL Chassis. Location: Centered on the front cab roof. | $6,565 |
| 5300-0450 | Light bar Whelen Freedom model FN72VLED 72" LED with Opticom and MKEZ7 mounts. Includes (10) red LED (2) blue LED and (2) white LED. N/A INTL Chassis. Location: Centered on the front cab roof. | $6,948 |
| 5300-0451 | Light bar Power Arc model LED VM8504GLP-6P 85" long. Lenses color: R/R/B/R/W/W/R/B/R/R. Includes (2) Go-Lights with controls. Location: center front cab roof. | $6,599 |
| 5300-0453 | Light bar Whelen Freedom model FN72VLED 72" LED with MKEZ7 mounts and clear lenses. Includes (10) red LED (2) white LED (2) dual LR11 alley lights and (2) dual LR11 takedown lights. N/A INTL Chassis. Location: Centered on the front cab roof. | $5,316 |
| 5300-0454 | Whelen Mini-Freedom LED light bars (PR) model FNMINI 24" with red/clear lenses driver blue/clear lenses officer and MK9 low mounts. Location: [#LOC]. | $4,592 |
| 5300-0455 | Whelen Mini-Freedom Rota-Beam LED light bars (PR) 24" with clear lenses and MKEZ7 mounts. Location: [#LOC]. | $5,956 |
| 5300-0456 | Light bar Whelen Justice 56" LED with clear lenses and MKEZ7 mounts. N/A on Vista roofs with front facing windows. Includes (4) corner facing LIN6 LED lights (red driver blue officer) (6) forward facing CON3 Linear LED lights; (3) red driver and (3) blue officer. Location: Centered on the front cab roof. | $2,423 |
| 5300-0459 | Light bar Whelen Freedom model FN72VLED 72" LED with MKEZ7 mounts and PE215 emitter. Includes (8) red LED and (4) blue LED. N/A INTL Chassis. Location: Centered on the front cab roof. | $5,640 |
| 5300-0460 | Tomar Scorpion model 970L-2603-0101 LED all red with rear blank NFPA light bars (PR). Location: [#LOC]. | $3,808 |
| 5300-0461 | Light bar Whelen Freedom model FN72QLED 72" LED with MK8 high mounts and red/clear lenses. Includes (10) red LED and (4) white LED. N/A INTL Chassis. Location: Centered on the front cab roof. | $5,706 |
| 5300-0462 | Light bar Federal Signal Split Vision VSLR6S-CHI3. Two (2) 21" 3-pod light bars w/ (1) red pod (1) multi-color pod and (1) blue pod on each bar with clear lenses. Location: [#LOC]. | $3,612 |
| 5300-0463 | Wire light bars using Deutsch connectors on exterior for maintenance/replacement. | $178 |
| 5300-0464 | Whelen Mini-Freedom LED light bar model FNMINI 28.25" with Opticom MKEZ7 mounts and clear lenses. Location: center front of cab. Requires additional forward facing lightbars. | $3,228 |
| 5300-0465 | Light bar Whelen Freedom model FN55QLED 55" LED with takedown lights MKEZ7 mounts and red lenses. Location: Centered on the front cab roof. | $3,886 |
| 5300-0466 | Light bar Whelen Freedom 60" LED with MKEZ7 mounts and clear lenses. Includes (6) red Rota-Beam LED and (2) white Rota-Beam LED. Location: Centered on the front cab roof. | $5,693 |
| 5300-0467 | Whelen Mini-Freedom Rota-Beam LED light bars (PR) 28.25" with clear lenses (1) red (1) white and (1) blue Rota-Beam LED lights with MKEZ7 mounts. Location: [#LOC]. | $5,686 |
| 5300-0468 | Light bar Whelen Freedom 82" LED with MKEZ7 mounts and clear lenses. Includes (8) Rota-Beam LED (6-red 2-white) (2) red LED and GTT 795H Opticom. N/A INTL Chassis. Location: Centered on the front cab roof. | $7,836 |

| Item No. | Description | |
|---|---|---|
| 5300-0469 | Light bar Federal Signal Navigator model NVG73-NFPA6 73" with (12) red Quadraflare LED lights and clear lenses. Location: Centered on the front cab roof. | $3,958 |
| 5300-0470 | Light bar Whelen Freedom model FN55QLED 55" LED with (6) red LED (6) white LED and MKEZ7 mounts. Location: Centered on the front cab roof. | $3,977 |
| 5300-0472 | Light bar Whelen Freedom model FN88QLED 88" LED with MKEZ7 mounts and clear lenses. Includes (12) red and (4) white LEDs. N/A commercial Chassis. Includes (1) forward facing red steady burn for California DOT. Location: Centered on the front cab roof | $6,253 |
| 5300-0473 | Whelen F4 Mini-Freedom LED light bars (PR) 21.5" with MKEZ7 mounts. Red and white LEDs with clear lense. Location: [#LOC]. | $4,592 |
| 5300-0474 | Light bar Federal Signal Split Vision VSLR6. Two (2) 21" 3-pod light bars w/ (2) red pods and (1) multi-color pod on each bar with red/clear lenses. Location: [#LOC]. | $3,552 |
| 5300-0476 | Light bar Federal Signal Legend. (2) 24" light bars red LED side facing only. Lenses color: clear. Location: [#LOC]. | $2,512 |
| 5300-0477 | Light bar Federal Signal Navigatorl NVG25 LED (PR). Includes (2) QL64 red (1) QL64 white and (2) QL73 red in each bar with clear lenses. Location: [#LOC] | $3,608 |
| 5300-0478 | Light bar Federal Signal Navigator model NVG87 87" with (8) red and (6) red/white Quadraflare LED lights. Location: Centered on the front cab roof. | $4,623 |
| 5300-0479 | Light bar Whelen Justice 56" LED with clear lenses and MKEZ7 mounts. N/A on Vista roofs with front facing windows. Includes (4) corner facing red LIN6 LED lights (6) forward facing CON3 Linear LED lights; (2) red (2) clear and (2) blue. Location: Centered on the front cab roof. | $2,423 |
| 5300-0480 | Light bar Whelen Freedom model FN72VLED 72" LED with MKEZ7 mounts. Includes (10) red LED (4) blue and (2) white LED. N/A INTL Chassis. Location: Centered on the front cab roof. | $5,555 |
| 5300-0481 | Light bar Code 3 model RMX91-ALRC-100. Upper deck contains (9) R-12 LED modules left and right alley lights. Lower deck contains (2) red R-12 steady burn LED modules (4) R-12 red LED modules (4) takedown lights and 795 emitter. Location: Centered on the front cab roof. | $6,010 |
| 5300-0482 | Light bar Federal Signal Legend 70" LED with red/white/blue diodes and clear lenses. Location: Centered on the front cab roof. | $2,095 |
| 5300-0484 | Light bar Federal Signal Split Vision VSLR8S. Two (2) 26.5" 4-pod light bars w/ (2) red (1) blue and (1) multi-color pods with clear lenses. Location: [#LOC]. | $4,328 |
| 5300-0485 | Whelen Mini-Freedom LED light bars (PR) model FNMINI 24" with clear lenses (1) officer side blue LED and MKEZ7 mounts. Location: [#LOC]. | $4,592 |
| 5300-0486 | Light bar Federal Signal JetStream 60'' LED. Red Solaris reflectors and 3M 792 Opticom. Red domes each side with clear center. Location: Centered on the front cab roof | $4,850 |
| 5300-0487 | Light bar Whelen Freedom model F4X7 60" LED with clear lenses and MKEZ7 mounts. Includes (10) red LED (4) white LED and side facing TIR6 alley lights. N/A INTL Chassis. Location: Centered on the front cab roof. | $5,515 |
| 5300-0488 | Whelen Mini-Freedom Rota-Beam LED light bars (PR) 24" with Amber LED with clear lenses and MKEZ7 mounts. Location: [#LOC]. | $5,956 |
| 5300-0489 | Light bar Whelen Freedom IV Model F4N7QLED 72" LED with MKEZ7 mounts. (6) Red and (2) white LEDs with clear lense and no rear facing LEDs. Location: Centered on the front cab roof. | $4,060 |
| 5300-0490 | Light bar Whelen Freedom IV 60" LED with MKEZ7 mounts. Red and white LEDs with clear lense and no rear facing LEDs. Location: Centered on the front cab roof. | $3,959 |
| 5300-0491 | Whelen F4 Mini-Freedom LED light bars (PR) 21.5" with MKEZ7 mounts. Red and white LEDs clear lenses and red filters. Location: [#LOC]. | $4,592 |
| 5300-0492 | Whelen F4 Mini-Freedom LED side facing light bars (PR) 21.5" with MKEZ7 mounts. Red LEDs with clear lense. Location: [#LOC]. | $3,911 |
| 5300-0493 | Light bar Whelen Freedom IV Model F4N7QLED 72" LED with MKEZ7 mounts. (8) Red and (2) white LEDs with clear lense and no rear facing LEDs. Location: Centered on the front cab roof. | $4,512 |
| 5300-0494 | Light bar Whelen Freedom IV Model F4N7QLED 72" LED with MKEZ7 mounts. (6) Red w/ filters and (2) white LEDs with clear lenses and no rear facing LEDs. Location: Centered on the front cab roof. | $4,178 |
| 5300-0495 | GTT 795H Opticom centered in forward facing Whelen Freedom IV light bar. | $1,956 |
| 5300-0496 | Light bar Whelen Freedom model F4N7VLED 72" LED with MKEZ7 mounts. (6) Red and (2) white LEDs with clear lense. N/A INTL Chassis or Vista roofs with front facing windows. Location: Centered on the front cab roof. | $4,060 |
| 5300-0497 | Whelen F4 Mini-Freedom LED light bars (PR) 21.5" with MK9 mounts. Red and white LEDs clear lenses and red filters. Location: [#LOC]. | $4,592 |
| 5300-0500 | Whelen F4 Mini-Freedom LED light bars (PR) 21.5" with MKEZ7 mounts. Red and white driver LEDs; blue and white officer LEDs' with clear lenses and red/blue filters. Location: [#LOC]. | $4,592 |
| 5300-0501 | Whelen F4 Mini-Freedom LED side facing light bars (PR) 21.5" with MKEZ7 mounts. Red and blue LEDs with clear lenses. Location: [#LOC]. | $3,911 |
| 5300-0502 | Light bar Whelen Freedom IV Model F4N7QLED 72" LED with MKEZ7 mounts. (4) Red (4) Blue and (2) white LEDs with clear lenses and no rear facing LEDs. Location: Centered on the front cab roof. | $4,512 |
| 5300-0503 | Whelen MK9S short slide bolt bracket mount for front light bar (PR). | $63 |
| 5300-0504 | Whelen MKEZ7 1.5" standard mount for front light bar (PR). | $50 |
| 5300-0505 | Whelen MK8H 5" high mount for front light bar (PR). | $125 |

| Item No. | Description | |
|---|---|---|
| 5300-0507 | Light bar Whelen Freedom IV Model F4X7 72" with 14 LED modules. Location: Centered on the front cab roof. | $5,581 |
| 5300-0508 | Whelen Mini-Freedom IV side facing light bars (PR) 21.5" with 4 LED modules. Location: [#LOC]. | $3,861 |
| 5300-0509 | Light bar Whelen Freedom IV Model F4X7 72" with 12 LED modules. Location: Centered on the front cab roof. | $5,053 |
| 5300-0510 | Light bar Whelen Freedom IV Model F4X7 72" with 10 LED modules. Location: Centered on the front cab roof. | $4,462 |
| 5300-0511 | Light bar Whelen Freedom IV Model F4X7 72" with 8 LED modules. Location: Centered on the front cab roof. | $4,010 |
| 5300-0512 | Light bar layout per customer specific requirements. | $254 |
| 5300-0513 | Colored filters for Whelen Freedom IV light bar. | $79 |
| 5300-0514 | Whelen MK9S short slide bolt bracket mount for mini front light bars (2) pair. | $127 |
| 5300-0515 | Whelen MKEZ7 1.5" standard mount for mini front light bars (2) pair. | $100 |
| 5300-0517 | Whelen MK9S short slide bolt bracket mount for mini side facing light bars (2) pair. | $127 |
| 5300-0518 | Whelen MKEZ7 1.5" standard mount for mini side facing light bars (2) pair. | $100 |
| 5300-0519 | Whelen MK8H 5" high mount for mini side facing light bars (2) pair. | $250 |
| 5300-0522 | Light bar Whelen Freedom IV Model F4X0 60" with 8 LED modules. Location: Centered on the front cab roof. | $4,010 |
| 5300-0524 | Whelen F4 Mini-Freedom LED light bars (PR) 21.5" with 5 LEDs in each bar. Location: [#LOC]. | $4,492 |
| 5300-0525 | Whelen TIR6 takedown lights for Freedom IV lightbar (PR). | $512 |
| 5300-0526 | Whelen F4 Mini-Freedom LED light bars (3) 21.5" with 5 LEDs' in each outer bar 4 LED's in center bar Location: Center front of cab roof and front cab corners at 45 degree angle. | $6,422 |
| 5300-0527 | Light bar Federal Signal Navigator NVG25 LED (PR) side facing. Includes (3) QL64 red/white in each bar with clear lenses. Location: [#LOC] | $2,950 |
| 5300-0528 | Light bar Federal Signal Navigator model NVG73 73" with (10) split red/white Quadraflare LED lights and (2) red Quadraflare LED lights. Location: Centered on the front cab roof. | $4,027 |
| 5300-0529 | Light bar Whelen Freedom IV Model F4X0 55" with 8 LED modules. Location: Centered on the front cab roof. | $3,377 |
| 5300-0530 | Light bar Federal Signal Navigator NVG25 LED side facing (PR). Includes (1) QL73 red (1) QL64 red/white and (1) red LED rotator in each bar with clear lenses. Location: [#LOC]. | $2,938 |
| 5300-0531 | Light bar Federal Signal Navigator NVG25 LED (PR). Includes (2) QL64 red (2) QL64 red/white and (1) red/white LED rotator in each bar with clear lenses. Location: [#LOC]. | $3,670 |
| 5300-0533 | Light bar package Whelen 4500 LED (3) bar package. Includes: (1) 40'' LED front bar w/ Opticom and (2) diagonal 24'' LED bars. | $9,144 |
| 5300-0534 | Light bar Federal Signal Navigator model NVG87 87" with (10) red and (4) red/white Quadraflare LED lights. Center red/white LEDs' to flash in an "X" pattern. Location: Centered on the front cab roof. | $4,623 |
| 5300-0535 | Light bar Federal Signal Navigator NVG25 LED (PR). Includes (2) QL64 red (1) QL64 split red/white and (2) QL73 red in each bar with clear lenses. Location: [#LOC] | $3,608 |
| 5300-0536 | Light bar Whelen Freedom IV Model F4R7 72" with 9 Rotabeam and 4 LED modules. Location: Centered on the front cab roof. | $7,159 |
| 5300-0537 | Light bar Whelen Freedom IV Model F4X1 81" with 14 LED modules. Location: Centered on the front cab roof. | $5,590 |
| 5300-0538 | Steady burn additional red LED module forward facing in officer side of Whelen light bar to meet California DOT. | $250 |
| 5300-0539 | Steady burn additional green LED module forward facing in officer side of Whelen light bar. | $276 |
| 5300-0540 | Light bar Whelen Freedom IV Model F4X0 60" with 14 LED modules. Location: Centered on the front cab roof. | $5,590 |
| 5300-0541 | Whelen TIR6 alley lights for Freedom IV lightbar (PR). | $512 |
| 5300-0542 | Light bar Federal Signal Navigator model NVG18 LED (PR). Includes (2) QL64 split red/white and (1) QL73 red in each bar with clear lenses. Location: [#LOC] | $2,827 |
| 5300-0543 | Light bar Federal Signal Navigator model NVG25-0001 (PR). Includes (2) SLR red/white rotators and (1) red QL64 in each bar with clear lenses. Location: [#LOC] | $3,656 |
| 5300-0548 | 2" standard mount for front Federal Navigator light bar (PR). | $72 |
| 5300-0554 | Light bar Whelen Freedom IV Model F4X1 81" with 16 LED modules. Location: Centered on the front cab roof. | $6,129 |
| 5300-0555 | Light bar Whelen Mini-Freedom IV side facing model F4RB 23" with 3 Rotabeams (PR). Location: [#LOC]. | $5,899 |
| 5300-0556 | Light bar Whelen Freedom IV Model F4X7 72" with 18 LED modules. Location: Centered on the front cab roof. Requires no forward vista windows or flat roof only. | $6,495 |
| 5300-0557 | Light bar Whelen Freedom IV Model F4X1 81" with 18 LED modules. Location: Centered on the front cab roof. | $6,665 |
| 5300-0558 | GTT 795H Opticom in forward facing Federal Signal Navigator light bar. | $1,502 |
| 5300-0559 | Light bar Whelen Freedom IV Model F4 56" with 6 Rotabeam modules. Location: Centered on the front cab roof. | $4,932 |

| Item No. | Description | |
|---|---|---|
| 5300-0560 | Light bar Whelen Freedom IV Model F4R0 60" with 6 Rotabeam and 2 LED modules. Location: Centered on the front cab roof. | $5,409 |
| 5300-0561 | Light bar Whelen Freedom IV Model F4X1 92" with 16 LED modules. Location: Centered on the front cab roof. | $6,250 |
| 5300-0562 | Light bar Federal Signal JetSolaris 60" LED. Red Solaris reflectors with clear domes. Includes LED takedowns and LED alley lights. NFPA compliant. Does not require 2 addl side facing bars. Location: Centered on the front cab roof. | $2,765 |
| 5300-0563 | Light bar Whelen Mini-Freedom IV model F4RB 23" with 2 Rotabeams and 2 LED modules (PR). Location: [#LOC]. | $6,022 |
| 5300-0564 | Light bar Power Arc model LED VM8504QE15-6P 90" long. Includes (2) FRC Evolutions LED flood lights. LED color: split R/B R/B/R/W/W/R/B/R split R/B with clear lenses. Location: center front cab roof. | $8,854 |
| 5300-0565 | Light bar Whelen Freedom IV Model F4X7 72" with 16 LED modules. Location: Centered on the front cab roof. | $5,959 |
| 5300-0566 | Light bar Whelen Freedom IV Model F4R0 60" with 6 Rotabeam and 8 LED modules. Location: Centered on the front cab roof. Includes rear facing Rotabeam and LED modules. | $7,192 |
| 5300-0567 | Light bar Whelen Freedom IV Model F4R7 72" with 6 Rotabeam and 4 LED modules. Location: Centered on the front cab roof. | $5,839 |
| 5300-0568 | Light bar Code 3 LED model 21TR22 (PR) 22" Long. All red with clear lens. Location: [#LOC] | $2,194 |
| 5300-0569 | Light bar Code 3 model 21TRPL52 LED red/clear with clear lenses. Location: Centered on the front cab roof. | $1,738 |
| 5310-0000 | Light bar Federal Signal Signal Master SML6. Location:  installed at the rear of the apparatus. | $916 |
| 5310-0001 | Light bar Federal Signal Signal Master SML8. | $1,007 |
| 5310-0002 | Light bar Federal Signal Signal Master SMLED6. | $1,562 |
| 5310-0003 | Light bar Federal Signal Signal Master SMLED8. | $1,650 |
| 5310-0005 | Whelen Traffic Advisor Model TA837A - 43.25" long. | $1,140 |
| 5310-0006 | Whelen Traffic Advisor Model TA870A - 62" long. | $1,786 |
| 5310-0010 | Light bar Federal Signal Signal Master SML430 19.5" long (PR). Mounted each side rear of body. | $1,059 |
| 5310-0011 | Light bar CODE 3 model AS10S Arrowstik 47" long. Mounted center rear body. | $1,317 |
| 5310-0012 | Diamond plate shield over rear directional light. | $327 |
| 5310-0014 | Light bar CODE 3 model AS839 Arrowstik 39" long. Lenses to be amber with red on the ends. Mounted center rear body. | $1,076 |
| 5310-0015 | Light bar CODE 3 model NASL839 LEDX Narrowstik 40.5" long. Lights heads are amber with red on the ends. Mounted center rear body. | $1,917 |
| 5310-0017 | Whelen Traffic Advisor model TAL65 LED - 36" long. | $1,412 |
| 5310-0018 | Whelen Traffic Advisor Model TAM65 LED - 36" long. | $1,826 |
| 5310-0019 | Light bar Code 3 model NASL847 LED Narrowstik 47" long. Mounted on rear of body. | $1,914 |
| 5310-0021 | Light bar CODE 3 model NASL839 LEDX Narrowstik 40.5 inches long. Mounted center rear body. | $1,917 |
| 5310-0023 | Light bar CODE 3 model NASL630 LEDX Narrowstik 30.5 inches long. | $1,719 |
| 5310-0025 | Directional light circuit wiring through upper level warning. | $81 |
| 5310-0027 | Whelen Traffic Advisor Model TAM85 LED - 47" long. | $2,555 |
| 5310-0028 | Whelen Traffic Advisor Model TAM83 LED - 31" long. | $1,871 |
| 5310-0029 | Smooth plate shield painted job color over rear directional light. | $566 |
| 5310-0030 | Whelen Traffic Advisor Model TA870L LED- 62" long. | $3,662 |
| 5310-0031 | Whelen Traffic Advisor model TA-4437M LED split (2) 22.75" long.  Locate one each side on rear panel of body. | $2,139 |
| 5310-0034 | Whelen Traffic Advisor Model TA870L SPL 48" long (PR) with (6) 700 series Super LED amber modules. Location: (1) each side facing on forward compartment tops. Control located officers side of center overhead. | $5,870 |
| 5310-0035 | Whelen Traffic Advisor Model TAL85 LED - 47" long. | $1,778 |
| 5310-0042 | Whelen Traffic Advisor Model TAZ86 LED - 31" long. | $2,350 |
| 5310-0043 | Whelen Traffic Advisor Model TANF65 LED - 34" long. | $1,797 |
| 5310-0044 | Light bar Federal Signal Signal Master Viper EXT LED 42" with 8 lights. | $1,869 |
| 5310-0045 | Light bar Federal Signal Signal Master Viper EXT LED 31" with 6 lights. | $1,651 |
| 5310-0046 | Whelen Traffic Advisor Model TANF85 LED - 45" long. | $2,220 |
| 5310-0051 | Whelen Traffic Advisor Model TA870L - 72" long LED. Includes TACTLD1 controller. | $1,913 |
| 5310-0053 | Whelen Traffic Advisor model TA-4437M LED split (2) 22.75" long. Locate one each side on rear upper body extrusion above B2 and B3. | $2,139 |
| 5310-0054 | Light bar Federal Signal Signal Master Plus SMLED-PLS-6. | $1,393 |
| 5310-0055 | Light bar Federal Signal Master Viper EXT LED 31" with 6 lights with clear lenses. | $1,651 |
| 5310-0056 | Whelen Traffic Advisor model TAL65 LED - 36" long. Locate surface mounted on driver and officer side of body up high approx. centered. | $1,412 |
| 5310-0057 | Whelen traffic advisor. Includes (8) IONSV3AC amber individual lights on 12" centers and control head. Location: side facing driver and officer side of body. | $3,392 |
| 5310-0058 | Whelen Traffic Advisor Model TADP8 LED - 30" long. Includes TADCTL1 controller. | $2,231 |

| Item No. | Description | |
|---|---|---|
| 5310-0059 | Whelen Traffic Advisor Model TAD8 LED - 30" long. Includes TADCTL1 controller. | $1,888 |
| 5310-0060 | Whelen Traffic Advisor Model TAZ66 LED - 23.25" long. | $1,887 |
| 5310-0061 | Brushed stainless steel shield over rear directional light. | $377 |
| 5310-0062 | Light bar Tomar model LSTICK13W6 24.5" long with amber light heads. | $1,329 |
| 5310-0063 | Federal Signal Viper EXT Model VPX800-2 LED w/ bezel (PR). Surfaced mounted with clear lens wired through ignition. Location: above rear ladder tunnel door. | $570 |
| 5310-0064 | Whelen Traffic Advisor Model TAM63 LED - 24" long. | $1,729 |
| 5310-0065 | Light bar Tomar model LSTICK13W6 24.5" long with amber light heads. | $1,329 |
| 5310-0066 | Whelen Traffic Advisor Model TAM8348 LED - 48" long. | $2,016 |
| 5310-0068 | Whelen Traffic Advisor Model TAD8RB LED - 30" long. Includes red driver and blue officer warning with TADCTL1 controller. | $1,888 |
| 5310-0070 | Whelen Traffic Advisor model TAL65 LED with clear lenses - 36" long. | $1,412 |
| 5310-0071 | Whelen Traffic Advisor model TADF6 LED - 37" long. Warning to be R/R/R/B/B/B. | $2,650 |
| 5310-0072 | Light bar PowerArc model P14PSK LED with 5 lights. Center to be red/yellow. Red to override with application of brakes. Driver and officer upper two amber to override with individual turn signals. | $3,350 |
| 5350-0000 | Camera backup Intec with monochrome monitor. | $4,718 |
| 5350-0001 | Camera back-up Safety Vision LCD model SV-CLCD70BA-625B with audio. For use with up to 2 cameras. | $2,129 |
| 5350-0025 | Back up camera for Vehicle Information Control Center. Video displays automatically when transmission is in reverse. | $718 |
| 5350-0026 | Side facing camera mtd up high on officer side of the cab centrally located (above canopy window if applicable) interlocked with right turn signal. Displays video on vehicle information control center. | $718 |
| 5350-0027 | Side facing camera mtd up high on driver side of the cab centrally located (above canopy window if applicable) interlocked with left turn signal. Displays video on vehicle information control center. | $718 |
| 5350-0028 | Forward facing camera mounted (approximately) center of cab. | $718 |
| 5350-0048 | Setcom intercom system with (6) cab jacks and (1) pump panel jack. Custom cabs only. Headsets to be shipped loose. | $9,332 |
| 5350-0054 | Safety Vision officer's side camera. Requires Safety Vision back-up camera option. SV-620 Kit w/ SV-523. Camera to be located on officer's side mirror. | $932 |
| 5350-0060 | Diamond plate camera shield. | $219 |
| 5350-0061 | Safety Vision driver's side camera. Requires Safety Vision back-up camera option. SV-620 Kit w/ SV-523. Camera to be located on driver's side mirror. | $932 |
| 5350-0070 | Voyager back-up camera. Video displays automatically when transmission is in reverse. Camera only - does not include monitor. | $725 |
| 5350-0071 | Voyager side mtd rear facing camera positioned up high on officer side of the cab centrally located (above canopy window if applicable) interlocked with right turn signal. Camera only - does not include monitor. | $706 |
| 5350-0072 | Voyager side mtd rear facing camera positioned up high on driver side of the cab centrally located (above canopy window if applicable) interlocked with left turn signal. Camera only - does not include monitor. | $706 |
| 5350-0073 | Voyager forward facing camera mounted upper center area of cab. | $663 |
| 5350-0074 | Sigtronics US-45S intercom system with (4) cab jacks (1) pump panel jack four headsets / hooks PTT switches for driver / ppnl. Does not include radio interface cable. Custom cabs only. Headsets to be shipped loose. | $4,446 |
| 5350-0076 | David Clark model 3800 intercom system with (5) cab head sets. Headsets to be shipped loose. | $7,298 |
| 5350-0078 | Smooth plate camera shield painted job color (match the "two tone" sale code color if two tone applies). | $338 |
| 5350-0079 | Sigtronics US-45D intercom system with (3) cab jacks (1) pump panel jack three headsets / hooks PTT switches for driver/officer/ppnl. Does not include radio interface cable. Custom cabs only. Headsets to be shipped loose. | $4,197 |
| 5350-0080 | Camera back-up Safety Vision LCD model SV-CLCD70A-625B with split screen capable monitor and audio. For use with up to 4 cameras. | $2,496 |
| 5350-0081 | Backup Camera to be located in recess direction lightbar box offset to officer side. | $219 |
| 5350-0083 | See instructions on file with sales for locations of headset plug-ins. | $103 |
| 5350-0084 | David Clark model 3800 intercom system with (6) cab head sets. Headsets to be shipped loose. | $8,253 |
| 5350-0085 | Safety Vision officer's side camera SV-622RS w/ SV-512 cable. Requires Safety Vision back-up camera option. Camera to be located up high on officer side of the cab centrally located (above canopy window if applicable) interlocked with right turn signal. Camera only - does not include monitor. | $965 |
| 5350-0086 | Safety Vision driver's side camera SV-622LS w/ SV-512 cable. Requires Safety Vision back-up camera option. Camera to be located up high on driver side of the cab centrally located (above canopy window if applicable) interlocked with left turn signal. Camera only - does not include monitor. | $965 |

| Item No. | Description | |
|---|---|---|
| 5350-0110 | Camera backup Zone Defense LCD model SYS-323-1-4Q with split screen capable monitor. | $2,055 |
| 5350-0111 | Camera backup Zone Defense LCD model SYS-323-1-4 with monitor and console. | $1,384 |
| 5350-0112 | Sigtronics US-67S intercom system with (6) cab jacks six headsets / hooks PTT switches for driver / officer. Does not include radio interface cable. Custom cabs only. Headsets to be shipped loose. | $5,800 |
| 5350-0114 | Sigtronics US-67D intercom system with (6) cab jacks six headsets / hooks PTT switches for driver / officer. Does not include radio interface cable. Custom cabs only. Headsets to be shipped loose. | $5,914 |
| 5350-0116 | Federal Signal back-up/DVR camera system. Includes front view rear view camera side view cameras split screen monitor and DVR. | $4,091 |
| 5350-0118 | Camera backup Federal Signal LCD model CAMSET70-NTSC-4 with monitor. | $1,246 |
| 5350-0121 | Install supplied ICA110-05 Radio as required by Customer. Antenna installed at manufacturers discretion. Programming to be done by Customer. Wire to Master switch to toggle radio on and off with master power. | $921 |
| 5350-0123 | Sigtronics US-12S intercom system with (7) cab jacks (1) pump panel jack seven headsets / hooks PTT switches for driver / officer / ppnl. Does not include radio interface cable. Custom cabs only. Headsets to be shipped loose. | $6,654 |
| 5350-0130 | David Clark model 3800 intercom system with (6) cab head sets and (1) pump panel jack. Custom cabs only. Headsets to be shipped loose. | $10,347 |
| 5350-0132 | David Clark model 3800 intercom system with four (4) cab head sets and one (1) pump panel jack. Radio interfaced to three (3) positions driver turret operator and pump panel. Headsets to be shipped loose. | $10,716 |
| 5350-0134 | Voyager back-up camera wire through multiplex display. Video displays automatically when transmission is in reverse. | $725 |
| 5350-0136 | Sigtronics US-67D intercom system with (5) cab jacks (1) pump panel jack (1) driver rear body jack five headsets / hooks PTT switches for driver / officer / ppnl / rear body. Does not include radio interface cable. Custom cabs only. Headsets to be shipped loose. | $5,507 |
| 5350-0137 | Sigtronics US-45S intercom system with (4) cab jacks four headsets / hooks PTT switches for driver / officer. Does not include radio interface cable. Custom cabs only. Headsets to be shipped loose. | $4,328 |
| 5350-0140 | Safety Vision officer's side camera SV-622RS w/ SV-512 cable. Requires Safety Vision back-up camera option. Camera to be located on officer's side gravel shield offset to the rear. | $932 |
| 5350-0141 | Safety Vision driver's side camera SV-622LS w/ SV-512 cable. Requires Safety Vision back-up camera option. Camera to be located on driver's side gravel shield offset to the rear. | $932 |
| 5350-0142 | Safety Vision officer's side camera. Requires Safety Vision back-up camera option. SV-620 Kit w/ SV-523. Camera to be located on officer's side of cab above tank level lights. | $932 |
| 5350-0158 | Camera back-up Safety Vision LCD model SV-CLCD70B-625B with audio. Located in cab dash on bracket (see photos). | $2,129 |
| 5350-0169 | Camera back-up Safety Vision LCD model SV-CLCD-64-810 with lens shutter that opens when the unit is put in reverse. | $2,202 |
| 5350-0173 | Safety Vision driver's side camera SV-622LS w/ SV-512 cable. Requires Safety Vision back-up camera option. Camera to be located on driver's side above forward tandem of rear axle. | $932 |
| 5350-0174 | Safety Vision officer's side camera SV-622RS w/ SV-512 cable. Requires Safety Vision back-up camera option. Camera to be located on officer's side above forward tandem of rear axle. | $932 |
| 5350-0175 | David Clark model 3800 intercom system with (4) cab head sets. Headsets to be shipped loose. | $6,343 |
| 5350-0176 | David Clark model 3800 intercom system with (5) cab head sets and (1) pump panel jack. Custom cabs only. Headsets to be shipped loose. | $9,442 |
| 5350-0177 | FireCom (4) position wireless 5yr extended warranty. Includes 5-day repair time with 2-day shipping. | $1,840 |
| 5350-0180 | Safety Vision officer's side camera SV-622RS w/ SV-512 cable. Requires Safety Vision back-up camera option. Camera to be located up high on officer side of the cab centrally located (above canopy window if applicable) interlocked with left turn signal. Camera only - does not include monitor. | $965 |
| 5350-0181 | Camera back-up Safety Vision LCD model SV-CLCD70BA-620A with audio. For use with up to 2 cameras. Includes monitor for console mounting. | $2,286 |
| 5350-0182 | Safety Vision officer's side camera SV-622RS w/ SV-512 cable. Requires Safety Vision back-up camera option. Camera to be located on front cab corner (approx 31" bottom of camera to bottom of cab) interlocked with right turn signal. Camera only - does not include monitor. | $965 |
| 5350-0183 | Safety Vision driver's side camera SV-622LS w/ SV-512 cable. Requires Safety Vision back-up camera option. Camera to be located on front cab corner (approx 31" bottom of camera to bottom of cab) interlocked with left turn signal. Camera only - does not include monitor. | $965 |
| 5350-0186 | Back-up camera speaker. For use with V-MUX electrical system. Located in cab accessible to driver. | $221 |
| 5350-0188 | Federal Signal (Sony) back-up camera wire through multiplex display. Video displays automatically when transmission is in reverse. | $701 |

| Item No. | Description | |
|---|---|---|
| 5350-0189 | Zone Defense PathFindIR FLIR camera. Located centered below windshield. For use with Safety Zone Defense split screen back-up camera system only. Includes guarded switch on driver side lower dash area. | $6,401 |
| 5350-0190 | Zone Defense side camera. Requires Zone Defense back-up camera option. Camera to be located on driver's and officer's side mirror. | $492 |
| 5350-0192 | Safety Vision back-up camera wired through multiplex display. Video displays automatically when transmission is in reverse. Camera only - does not include monitor. | $932 |
| 5350-0193 | Voyager rear facing camera positioned on officer's side front cab corner (approx 31" bottom of camera to bottom of cab) interlocked with right turn signal. Camera only - does not include monitor. | $706 |
| 5350-0194 | Voyager rear facing camera positioned on driver's side front cab corner (approx 31" bottom of camera to bottom of cab) interlocked with left turn signal. Camera only - does not include monitor. | $706 |
| 5350-0196 | Sigtronics US-67D intercom system with (5) cab jacks (1) pump panel jack five headsets / hooks PTT switches for driver / officer / ppnl. Does not include radio interface cable. Custom cabs only. Headsets to be shipped loose. | $5,184 |
| 5350-0197 | Safety Vision officer's side camera SV-622RS w/ SV-512 cable. Requires Safety Vision back-up camera option. Camera to be located on front fender interlocked with right turn signal. Camera only - does not include monitor. | $965 |
| 5350-0198 | Voyager rear facing camera positioned on officer's side front fender interlocked with right turn signal. Camera only - does not include monitor. | $706 |
| 5350-0199 | FireCom intercom kit to include a digital intercom model 5100D four (4) plug in modules and headset hooks shall be installed within the cab. Headsets are not included and ordered separately (misc loose equip). | $2,729 |
| 5350-0200 | FireCom intercom kit to include a digital intercom model 5100D four (4) plug in modules and headset hooks shall be installed within the cab and one (1) exterior pump panel plug in module. Headsets are not included and ordered separately (misc loose equip). | $2,964 |
| 5350-0201 | FireCom intercom kit to include a digital intercom model 5100D six (6) plug in modules and headset hooks shall be installed within the cab. Headsets are not included and ordered separately (misc loose equip). | $3,092 |
| 5350-0202 | FireCom intercom kit to include a digital intercom model 5100D six (6) plug in modules and headset hooks shall be installed within the cab and one (1) exterior pump panel plug in module. Headsets are not included and ordered separately (misc loose equip). | $3,368 |
| 5350-0203 | FireCom intercom kit to include a digital intercom model 5100D five (5) plug in modules and headset hooks shall be installed within the cab. Headsets are not included and ordered separately (misc loose equip). | $2,931 |
| 5350-0204 | FireCom intercom kit to include a digital intercom model 5100D five (5) plug in modules and headset hooks shall be installed within the cab and one (1) exterior pump panel plug in module. Headsets are not included and ordered separately (misc loose equip). | $3,166 |
| 5350-0207 | FireCom wireless intercom kit to include a digital intercom model 5100D two (2) base transmit units with radio transmission one (1) base transmit unit for intercom only (no radios) and six (6) headset hooks shall be installed within the cab. Headsets are not included and ordered separately (misc loose equip). | $4,284 |
| 5350-0208 | FireCom intercom kit to include a dual radio digital intercom model 5200D four (4) plug in modules and headset hooks shall be installed within the cab. Headsets are not included and ordered separately (misc loose equip). | $3,201 |
| 5350-0209 | FireCom intercom kit to include a dual radio digital intercom model 5200D four (4) plug in modules and headset hooks shall be installed within the cab and one (1) exterior pump panel plug in module. Headsets are not included and ordered separately (misc loose equip). | $3,436 |
| 5350-0213 | FireCom intercom kit to include a dual radio digital intercom model 5200D five (5) plug in modules and headset hooks shall be installed within the cab and one (1) exterior pump panel plug in module. Headsets are not included and ordered separately (misc loose equip). | $3,638 |
| 5350-0219 | Safety Vision officer's side camera SV-622RS w/ SV-512 cable. Requires Safety Vision back-up camera option. Camera to be located on the officer side cab up high behind front door below the scene light interlocked with right turn signal. Camera only - does not include monitor. | $965 |
| 5350-0221 | Setcom intercom kit to include a intercom model IM-900 and four (4) plug in modules shall be installed within the cab. Headsets are not included and ordered separately (misc loose equip). | $1,333 |
| 5350-0222 | Setcom dual radio intercom kit to include a intercom model IM-900 and four (4) plug in modules shall be installed within the cab. Headsets are not included and ordered separately (misc loose equip). | $1,808 |
| 5350-0223 | Setcom intercom kit to include a intercom model IM-900 four (4) plug in modules shall be installed within the cab and (1) pump panel plug in module. Headsets are not included and ordered separately (misc loose equip). | $1,695 |

| Item No. | Description | |
|---|---|---|
| 5350-0224 | Setcom dual radio intercom kit to include a intercom model IM-900 four (4) plug in modules shall be installed within the cab and (1) pump panel plug in module. Headsets are not included and ordered separately (misc loose equip). | $2,170 |
| 5350-0225 | Setcom intercom kit to include a intercom model IM-900 and five (5) plug in modules shall be installed within the cab. Headsets are not included and ordered separately (misc loose equip). | $1,651 |
| 5350-0226 | Setcom dual radio intercom kit to include a intercom model IM-900 and five (5) plug in modules shall be installed within the cab. Headsets are not included and ordered separately (misc loose equip). | $2,124 |
| 5350-0227 | Setcom intercom kit to include a intercom model IM-900 five (5) plug in modules shall be installed within the cab and (1) pump panel plug in module. Headsets are not included and ordered separately (misc loose equip). | $2,013 |
| 5350-0228 | Setcom dual radio intercom kit to include a intercom model IM-900 five (5) plug in modules shall be installed within the cab and (1) pump panel plug in module. Headsets are not included and ordered separately (misc loose equip). | $2,485 |
| 5350-0229 | Setcom intercom kit to include a intercom model IM-900 and six (6) plug in modules shall be installed within the cab. Headsets are not included and ordered separately (misc loose equip). | $1,651 |
| 5350-0230 | Setcom dual radio intercom kit to include a intercom model IM-900 and six (6) plug in modules shall be installed within the cab. Headsets are not included and ordered separately (misc loose equip). | $2,124 |
| 5350-0231 | Setcom intercom kit to include a intercom model IM-900 six (6) plug in modules shall be installed within the cab and (1) pump panel plug in module. Headsets are not included and ordered separately (misc loose equip). | $2,013 |
| 5350-0232 | Setcom dual radio intercom kit to include a intercom model IM-900 six (6) plug in modules shall be installed within the cab and (1) pump panel plug in module. Headsets are not included and ordered separately (misc loose equip). | $2,485 |
| 5350-0233 | Setcom wireless intercom kit to include a intercom model IM-900 and four (4) wireless adapters shall be installed within the cab. Headsets are not included and ordered separately (misc loose equip). | $1,937 |
| 5350-0234 | Setcom wireless dual radio intercom kit to include a intercom model IM-900 and four (4) wireless adapters shall be installed within the cab. Headsets are not included and ordered separately (misc loose equip). | $2,411 |
| 5350-0235 | Setcom wireless intercom kit to include a intercom model IM-900 and five (5) wireless adapters shall be installed within the cab. Headsets are not included and ordered separately (misc loose equip). | $2,380 |
| 5350-0236 | Setcom wireless dual radio intercom kit to include a intercom model IM-900 and five (5) wireless adapters shall be installed within the cab. Headsets are not included and ordered separately (misc loose equip). | $2,854 |
| 5350-0237 | Setcom wireless intercom kit to include a intercom model IM-900 and six (6) wireless adapters shall be installed within the cab. Headsets are not included and ordered separately (misc loose equip). | $2,508 |
| 5350-0238 | Setcom wireless dual radio intercom kit to include a intercom model IM-900 and six (6) wireless adapters shall be installed within the cab. Headsets are not included and ordered separately (misc loose equip). | $2,983 |
| 5350-0239 | David Clark model 3800 intercom system with (4) cab head sets and (1) pump panel jack. Custom cabs only. Headsets to be shipped loose. | $8,534 |
| 5350-0241 | Zone Defense side camera. Requires Zone Defense back-up camera option. Camera to be located on officer's side mirror. | $265 |
| 5350-0243 | FireCom intercom kit to include a digital intercom model 5100D eight (8) plug in modules and headset hooks shall be installed within the cab. Headsets are not included and ordered separately (misc loose equip). | $3,536 |
| 5350-0246 | Voyager rear facing camera positioned on officer's side front cab mirror (approx 31" bottom of camera to bottom of cab) interlocked with right turn signal. Camera only - does not include monitor. | $706 |
| 5350-0247 | Remote 5100D head for Firecom intercom. Location: [#LOC]. | $606 |
| 5350-0248 | Remote 5200D head for Firecom intercom. Location: [#LOC]. | $686 |
| 5350-0249 | Sigtronics US-45S Ultrasound Intercom System with (4) cab jacks (4) headsets (2) SE-8RPTT headsets dual speaker flex boom mic with radio push to talk switch (2) SE-8 headsets dual speaker flex boom mic. Includes HLN6961 radio interface cable. Custom cabs only. Headsets to be shipped loose. | $5,522 |
| 5350-0251 | Camera system Brigade 360. Includes 4 cameras located front rear left and right. Requires seperate multiplex color display as the monitor. Note: cameras must be located as high as possible with side cameras centrally located. (Requires approval for stainless steel prodcut.) | $7,485 |
| 5350-0252 | Brigade Digital Video Recorder model MDR-304 for use with Brigade camera system. | $2,295 |
| 5350-0253 | Voyager officer camera positioned on the officer's side of the speedlay module up high near the E-ONE Logo looking downward. Camera only - does not include monitor | $706 |

| Item No. | Description | |
|---|---|---|
| 5350-0254 | Zone Defense back-up camera wired through multiplex display. Video displays automatically when transmission is in reverse. Camera only - does not include monitor. | $492 |
| 5350-0255 | Foot switch driver side Setcom. Trico foot switch to key the microphone includes 16' cable. | $364 |
| 5350-0256 | Install customer supplied communication system. Antenna installed at manufacturers discretion. Programming to be done by customer. Wire to master switch to toggle radio on and off with master power. | $1,481 |
| 5350-0257 | Federal Signal (Sony) driver's side camera. Camera to be located up high on driver side of the cab centrally located (above canopy window if applicable) interlocked with left turn signal. Camera only - does not include monitor. | $701 |
| 5350-0258 | Federal Signal (Sony) officer's side camera. Camera to be located up high on officer side of the cab centrally located (above canopy window if applicable) interlocked with left turn signal. Camera only - does not include monitor. | $701 |
| 5350-0261 | David Clark model 3800 intercom system with (8) head sets and (1) pump panel jack. Custom cabs only. Headsets to be shipped loose. | $12,122 |
| 5350-0262 | David Clark model 3800 intercom system with (8) cab head sets. Headsets to be shipped loose. | $10,165 |
| 5350-0263 | Sigtronics US-12S intercom system with (8) cab jacks (1) pump panel jack eight headsets / hooks PTT switches for driver / officer / ppnl. Does not include radio interface cable. Custom cabs only. Headsets to be shipped loose. | $7,389 |
| 5350-0264 | Safety Vision camera. Requires Safety Vision back-up camera option or multiplex display. SV-625B Kit. Camera to be located driver side compartment top above dump chute officer side below diamond plate mounting box for scene light above dump chute. | $1,862 |
| 5350-0265 | FireCom intercom kit to include a digital intercom model 5100D six (6) plug in modules and headset hooks shall be installed within the cab and one (1) exterior plug in module in L1 adjacent to breaker box (if equipped). Headsets are not included and ordered separately (misc loose equip). | $3,368 |
| 5350-0268 | Install customer supplied new FireCom 5100D (4) cab (1) pump panel intercom system. | $718 |
| 5350-0269 | Camera system Voyager model AOM713WP 7" waterproof monitor with VCMS10B camera located on officer side pump module up high. Monitor located on pump operator panel. | $1,274 |
| 5350-0270 | Federal Signal (Sony) driver's side camera. Camera to be located on front cab corner (approx 31" bottom of camera to bottom of cab) interlocked with left turn signal. Camera only - does not include monitor. | $701 |
| 5350-0271 | Federal Signal (Sony) officer's side camera. Camera to be located on front cab corner (approx 31" bottom of camera to bottom of cab) interlocked with right turn signal. Camera only - does not include monitor. | $701 |
| 5350-0275 | Zone Defense PathFindIR FLIR camera. Located centered below windshield. No monitor included; camera only. Video wired through multiplex display in cab. | $6,401 |
| 5350-0276 | Back-up camera speaker. For use with V-MUX electrical system. Located on driver side overhead console. | $221 |
| 5350-0277 | FireCom (5) position (1) which is wireless. Intercom kit to include a digital intercom model 5100D one (1) base transmit unit with radio transmission (for wireless) (4) plug in modules and (5) headset hooks shall be installed within the cab. Headsets are not included and ordered separately (misc loose equip). | $3,270 |
| 5350-0278 | FireCom wireless intercom kit to include a digital intercom model 5100D two (2) base transmit units with radio transmission and two (2) headset hooks shall be installed within the cab. Headsets are not included and ordered separately (misc loose equip). | $3,122 |
| 5350-0279 | FireCom intercom kit to include a digital intercom model 5100D six (6) plug in modules and headset hooks shall be installed within the cab and one (1) exterior plug in module at the driver side rear of body. Headsets are not included and ordered separately (misc loose equip). | $3,368 |
| 5350-0283 | Zone Defense side camera. Requires Zone Defense back-up camera option. Camera to be located on officer's side of cab ahead of cab door driprail approx. 31" above bottom of cab. | $492 |
| 5350-0284 | Zone Defense side camera. Requires Zone Defense back-up camera option. Camera to be located on driver's side of cab ahead of cab door driprail approx. 31" above bottom of cab. | $492 |
| 5350-0285 | FireCom (6) position (2) which are wireless. Intercom kit to include a digital intercom model 5100D two (2) base transmit unit with radio transmission (for wireless) (4) plug in modules and (6) headset hooks shall be installed within the cab. Headsets are not included and ordered separately (misc loose equip). | $3,893 |
| 5350-0286 | FireCom (6) position (2) which are wireless. Intercom kit to include a digital intercom model 5200D two (2) base transmit unit with radio transmission (for wireless) (4) plug in modules and (6) headset hooks shall be installed within the cab. Headsets are not included and ordered separately (misc loose equip). | $4,669 |
| 5350-0287 | Brushed stainless steel camera shield. | $252 |
| 5350-0289 | FireCom (5) position (2) which are wireless. Intercom kit to include a digital intercom model 5100D two (2) base transmit unit with radio transmission (for wireless) (3) plug in modules and (5) headset hooks shall be installed within the cab. Headsets are not included and ordered separately (misc loose equip). | $3,878 |

| Item No. | Description | |
|---|---|---|
| 5350-0290 | Federal Signal back-up camera flush mounted and wired through multiplex display. Video displays automatically when transmission is in reverse. | $701 |
| 5350-0291 | Sigtronics US-67S intercom system with (6) cab jacks (1) pump panel jack six headsets / hooks PTT switches for driver / officer / ppnl. Does not include radio interface cable. Custom cabs only. Headsets to be shipped loose. | $5,920 |
| 5350-0292 | Sigtronics US-45D intercom system with (3) cab jacks (1) pump panel jack (1) turntable jack three headsets / hooks PTT switches for driver/officer/ppnl/turntable. Does not include radio interface cable. Custom cabs only. Headsets to be shipped loose. | $4,367 |
| 5350-0293 | FireCom intercom kit to include a digital intercom model 5100D five (5) plug in modules and headset hooks shall be installed within the cab and one (1) exterior plug in module at the driver side rear of body. Headsets are not included and ordered separately (misc loose equip). | $3,166 |
| 5350-0295 | Remote 5400D head for Firecom intercom. Location: [#LOC]. | $858 |
| 5350-0299 | Safety Vision CF DVR with SV-620A camera on front of cab above grille. No monitor. Camera to record when truck is in operation both drriving and sitting idle. | $2,851 |
| 5350-0300 | David Clark model 3800 dual radio intercom system with (6) cab head sets. Headsets to be shipped loose. | $8,397 |
| 5350-0303 | FireCom intercom kit to include a digital intercom model 5100D one (1) plug in module and headset hook shall be installed within the cab and one (1) exterior pump panel plug in module. Headset is not included and ordered separately (misc loose equip). | $2,336 |
| 5350-0306 | David Clark model 3800 wireless intercom system with (4) cab head sets. Headsets and battery packs to be shipped loose. | $11,619 |
| 5350-0308 | Safety Vision forward camera. Requires Safety Vision back-up camera option. SV-620 Kit w/ SV-523. Camera to be located on front of cab centered below windshield. | $932 |
| 5350-0311 | Rosco dual vision camera system model DV231. Interior mounted at the front windshield. | $1,759 |
| 5350-0312 | Setcom aerial advantage antenna kit for wireless headsets (EA). Location(s) to be determined by available space on cab roof. | $282 |
| 5350-0317 | Sigtronics US-67D intercom system with (5) cab jacks five headsets / hooks PTT switches for driver / officer. Does not include radio interface cable. Custom cabs only. Headsets to be shipped loose. | $5,081 |
| 5350-0318 | David Clark model 3800 dual intercom system with (6) cab head sets and (1) pump panel jack. Custom cabs only. Headsets to be shipped loose. | $10,347 |
| 5350-0319 | FireCom wireless intercom kit to include a digital intercom model 5100D one (1) base transmit unit with up to (5) radio/intercom only transmission and up to (5) headset hooks shall be installed within the cab. Headsets are not included and ordered separately (misc loose equip). | $3,785 |
| 5350-0320 | FireCom wireless intercom kit to include a digital dual intercom model 5200D one (1) base transmit unit with up to (5) radio/intercom only transmission and up to (5) headset hooks shall be installed within the cab. Headsets are not included and ordered separately (misc loose equip). | $4,236 |
| 5350-0321 | FireCom wireless intercom kit to include a digital intercom model 5100D one (1) base transmit unit with up to (10) radio/intercom only transmission and up to (10) headset hooks shall be installed within the cab. Headsets are not included and ordered separately (misc loose equip). | $5,637 |
| 5350-0322 | FireCom wireless intercom kit to include a digital dual intercom model 5200D one (1) base transmit unit with up to (10) radio/intercom only transmission and up to (10) headset hooks shall be installed within the cab. Headsets are not included and ordered separately (misc loose equip). | $6,086 |
| 5350-0323 | Camera system Voyager model AOM713WP 7" waterproof monitor with VCMS10B camera located on officer side body above R1. Monitor located on pump operator panel. | $1,274 |
| 5350-0324 | Safety Vision officer's side camera SV-622RS w/ SV-512 cable. Requires Safety Vision back-up camera option. Camera to be located on the officer side cab above fenderette interlocked with right turn signal. Camera only - does not include monitor. | $965 |
| 5350-0326 | David Clark model 3800 intercom system with (4) cab head sets. Driver and officer will be wireless; all others are wired. Headsets to be shipped loose. | $8,050 |
| 5380-0004 | Compartment light incandescent additional (EA). Locate opposite of standard (if applicable) in compartment [#LOC] | $78 |
| 5380-0005 | Compartment light Truck-Lite LED additional (EA). Locate opposite of standard in compartment [#LOC]. | $202 |
| 5380-0006 | Compartment light incandescent additional (EA). Door(s) mounted. Compartment [#LOC]. | $121 |
| 5380-0007 | Compartment light Truck-Lite LED additional (EA). Door(s) mounted. Compartment [#LOC]. | $276 |
| 5380-0008 | Compartment light package incandescent for small bodies. | $519 |
| 5380-0009 | Compartment light package incandescent for medium bodies. | $775 |
| 5380-0011 | Compartment light package LED for small bodies. | $1,848 |
| 5380-0012 | Compartment light package Truck-Lite LED for medium bodies. | $3,090 |
| 5380-0027 | Ground light package for cab and body - small. | $482 |
| 5380-0029 | Ground light package for cab and body - large. | $723 |

| Item No. | Description | |
|---|---|---|
| 5380-0030 | Ground light package LED - small. | $1,573 |
| 5380-0032 | Ground light package LED - large. | $2,355 |
| 5380-0033 | Step light package body - small. | $450 |
| 5380-0035 | Step light package body - large. | $674 |
| 5380-0036 | Step light package body LED - small. | $1,540 |
| 5380-0038 | Step light package body LED - large. | $2,307 |
| 5380-0042 | Light recessed step Truck-Lite incandescent (additional). Locate [#LOC]. | $124 |
| 5380-0045 | Light recessed step Truck-Lite LED (additional). Locate [#LOC]. | $189 |
| 5380-0053 | Lights under rear intermediate step LED (2). 4" grommet mounted lights. Lights operated with switch on rear of body. Locate switch below driver side intermediate step. | $559 |
| 5380-0055 | Cab and body ground lights to be wired through chassis reverse. | $81 |
| 5380-0056 | Compartment lights to be wired to automatically activate when park brake is set (IPO cab mtd compartment light switch). | $81 |
| 5380-0059 | Additional incandescent ground lights. Locate below L1/R1 and L3/R3. | $543 |
| 5380-0060 | Additional LED ground light (EA). Location: Below [#LOC]. | $213 |
| 5380-0061 | LED hosebed walkway light package. Includes lighting located to the outboard side of the walkway and (1) at the rear of the walkway facing forward. Lights to be switched with work light switch in cab. | $727 |
| 5380-0062 | Compartment light Federal Signal LED additional (EA). Locate opposite of standard in compartment [#LOC]. | $142 |
| 5380-0064 | Compartment light package Federal Signal LED for small bodies. | $1,477 |
| 5380-0065 | Compartment light package Federal Signal LED for medium bodies. | $2,512 |
| 5380-0067 | Ground light package Federal Signal LED - small. | $1,573 |
| 5380-0068 | Ground light package Federal Signal LED - large. | $2,356 |
| 5380-0069 | Step light package body Federal Signal LED - small. | $1,182 |
| 5380-0070 | Step light package body Federal Signal LED - large. | $1,776 |
| 5380-0071 | Light Federal Signal recessed step LED (additional). Locate [#LOC]. | $152 |
| 5380-0072 | Additional Federal Signal LED ground light (EA). Location: Below [#LOC] | $200 |
| 5380-0075 | Compartment light incandescent additional (EA). Locate on ceiling of [#LOC]. | $78 |
| 5380-0076 | Compartment light deluxe package Whelen PSC0CDCR LED for medium bodies. Light to be stacked vertically on both sides of compartment. | $8,076 |
| 5380-0077 | Compartment light package Amdor Luma-Bar LED for medium bodies. Includes one light per compartment (two if transverse). | $2,534 |
| 5380-0078 | Compartment light Amdor Luma-Bar LED 26-42" long additional (EA). Locate [#LOC]. | $246 |
| 5380-0079 | Compartment light Amdor Luma-Bar LED 48-74" long additional (EA). Locate [#LOC]. | $374 |
| 5380-0081 | Compartment light package Whelen LED for medium bodies. | $4,810 |
| 5380-0082 | Ground light package Whelen LED - large. | $3,183 |
| 5380-0083 | Step light package Whelen LED - large. | $3,183 |
| 5380-0087 | Compartment light package Weldon LED for medium bodies. | $2,066 |
| 5380-0088 | Ground light package Weldon LED - small. | $1,419 |
| 5380-0089 | Step light package body Weldon LED - small. | $1,033 |
| 5380-0090 | Compartment light LED (EA). Location: [#LOC]. | $202 |
| 5380-0098 | Compartment light package Whelen PSC0CDCR LED for medium bodies. Light to be stacked vertically on one side of compartment. | $4,040 |
| 5380-0111 | Compartment light Amdor LED for medical cabinet (EA). | $246 |
| 5380-0116 | Ground light package Amdor Luma-Bar H2O LED - large. | $1,825 |
| 5380-0121 | (2) Incandescent 4" round lights for use with preconnect module. Locate (1) each side on front compartment face down low. | $173 |
| 5380-0122 | (2) Weldon LED 4" round lights for use with preconnect module. Locate (1) each side on front compartment face down low. | $252 |
| 5380-0127 | LED body compartment light package for body and preconnect module. Lights locate (1) each preconnect tool compartment (2) each for L1/R1 (1) each for L2/R2 and (2) each for L3/R3 (pump operator compartment to have the lights in the lower area only) | $1,103 |
| 5380-0128 | LED body compartment light package for body and transverse module. Lights locate (4) transverse module- (2) each on forward wall of each opening (2) each for L1/R1 (1) each for L2/R2 and (2) each for L3/R3 (pump operator compartment to have the lights in the lower area only) | $1,217 |
| 5380-0133 | Light recessed step Weldon LED (additional). Locate [#LOC] | $128 |
| 5380-0138 | Compartment light ROM V3 LED 24-36" long additional (EA). Locate [#LOC]. | $273 |
| 5380-0140 | Compartment light ROM V3 LED for medical cabinet (EA). | $335 |
| 5380-0141 | Compartment light package ROM V3 LED for medium bodies. Includes one light per compartment (two if transverse). | $3,027 |
| 5380-0142 | Compartment light package ROM V3 LED for medium bodies. Includes two lights per compartment (four if transverse). | $6,054 |
| 5380-0144 | Compartment light package Amdor Luma-Bar LED for medium bodies. Includes two lights per compartment (four if transverse). | $5,068 |

| Item No. | Description | |
|---|---|---|
| 5380-0146 | Compartment light Amdor LED additional (EA) ceiling mounted as close to door opening as practical. Location: [#LOC]. | $246 |
| 5380-0161 | Light recessed step Truck-Lite incandescent. Locate one each side of top mount walkway. | $247 |
| 5380-0162 | Light recessed step Truck-Lite LED. Locate one each side of top mount walkway. | $375 |
| 5380-0163 | Light recessed step Federal Signal LED. Locate one each side of top mount walkway. | $303 |
| 5380-0166 | Compartment light Trucklite LED additional (EA). Locate in [#LOC]. | $202 |
| 5380-0182 | Ground light package EON LED - large. | $1,321 |
| 5380-0183 | TM Walkway lighting TecNiq EON LED. Includes (3) lights with S/S housings low on front of module to illuminate top mount walkway. | $242 |
| 5380-0189 | Compartment light package Amdor Luma-Bar LED for small bodies. Includes one light per compartment (two if transverse). | $1,581 |
| 5380-0190 | Compartment light package Amdor Luma-Bar LED for small bodies. Includes two lights per compartment (four if transverse). | $3,159 |
| 5380-0202 | Step light package body EON LED - large. | $1,122 |
| 5380-0203 | Step light package body EON LED - small. | $761 |
| 5380-0205 | Cab step lighting package. Includes (2) EON LED lights per side. | $246 |
| 5380-0206 | Cab step lighting package. Includes (4) EON LED lights per side. | $488 |
| 5380-0207 | Intermediate pump panel step lights (PR). EON LED lights. | $124 |
| 5380-0209 | Compartment light Amdor LED for medical cabinet (PR). | $491 |
| 5380-0212 | Lights (PR) Tecniq EON LED lights 1 each side (driver and officer side) of the speedlay storage compartment. | $245 |
| 5380-0214 | Compartment light Truck-Lite LED additional (EA). Locate on ceiling of [#LOC]. | $202 |
| 5380-0216 | Ground light package LED for chassis. Includes (6) Trucklite LED lts. | $1,354 |
| 5380-0217 | Compartment light Whelen Fluorent Plus for medical cabinet (PR). | $692 |
| 5380-0218 | Step light package Whelen LED - small. | $1,762 |
| 5380-0220 | Compartment light package Whelen Fluorent Plus for medium bodies. Includes two lights per compartment (four if transverse). | $7,522 |
| 5380-0223 | Amdor LED strip lights for NFPA hose bed lighting. The lights to be mounted inside hose bed cover thru cover plate on outer skin. Light will illuminate the hose bed area thru slots in the inner skin. | $2,405 |
| 5380-0226 | Compartment light Amdor white lumbar. Location: [#LOC]. | $218 |
| 5380-0228 | Stainless steel bolt on light guard to protect hose bed lightring fixture(s) from damage. | $117 |
| 5380-0235 | Ground light package Amdor Luma Bar H2O LED - small. | $968 |
| 5380-0236 | Additional LumaBar H2O LED ground light (EA). Location: Below [#LOC]. | $168 |
| 5380-0238 | Compartment light package Amdor Luma-Bar Red LED for small bodies. Includes one light per compartment (two if transverse). | $1,581 |
| 5380-0239 | Whelen PELCC ground light package LED - large. | $2,851 |
| 5380-0240 | Compartment light package Amdor Luma-Bar Red LED for medium bodies. Includes one light per compartment (two if transverse). | $2,534 |
| 5380-0241 | Ground light package TecNiq LED - small. | $492 |
| 5380-0242 | Ground light package TecNiq LED - large. | $738 |
| 5380-0243 | Compartment light package TecNiq LED for medium bodies. | $849 |
| 5380-0244 | Compartment light package TecNiq LED for small bodies. | $510 |
| 5380-0245 | Compartment light ROM V4 LED 24-36" long additional (EA). Locate [#LOC]. | $273 |
| 5380-0246 | Compartment light ROM V4 LED 42-72" long additional (EA). Locate [#LOC]. | $456 |
| 5380-0247 | Compartment light ROM V4 LED for medical cabinet (EA). | $335 |
| 5380-0248 | Compartment light ROM V4 LED for medical cabinet (PR). | $668 |
| 5380-0249 | Compartment light package ROM V4 LED for small bodies. Includes one light per compartment (two if transverse). | $1,863 |
| 5380-0250 | Compartment light package ROM V4 LED for small bodies. Includes two lights per compartment (four if transverse). | $3,723 |
| 5380-0251 | Compartment light package ROM V4 LED for medium bodies. Includes one light per compartment (two if transverse). | $3,027 |
| 5380-0252 | Compartment light package ROM V4 LED for medium bodies. Includes two lights per compartment (four if transverse). | $6,054 |
| 5380-0258 | Light recessed step TecNiq LED. Locate one each side of top mount walkway. | $116 |
| 5380-0259 | Compartment light ROM V4 LED additional (EA) ceiling mounted as close to door opening as practical. Location: [#LOC]. | $335 |
| 5380-0261 | Dunnage pan lights EON (PR). Evenly spaced on front wall of dunnage pan wired through pump panel lights. | $124 |
| 5380-0263 | Raised bumper lid lights EON (PR). Evenly spaced under extra capacity lid wired through door ajar switch. | $227 |
| 5380-0266 | Whelen PELCC lights LED (PR). Wired through work light switch. Location: [#LOC]. | $626 |
| 5380-0267 | Compartment light package ROM V4 LED for Water Master. Includes two lights per compartment. | $1,335 |
| 5380-0276 | Compartment light package TecNiq T440 4" LED for small bodies. | $607 |
| 5380-0277 | Compartment light package TecNiq T440 4" LED for medium bodies. | $910 |

| Item No. | Description | |
|---|---|---|
| 5380-0279 | Ground light package TecNiq T440 4" LED - small. | $558 |
| 5380-0280 | Ground light package TecNiq T440 4" LED - large. | $838 |
| 5380-0281 | Light recessed step TecNiq T440 4" LED. Locate one each side of top mount walkway. | $132 |
| 5380-0282 | Compartment light TecNiq T440 4" LED additional (EA). Locate opposite of standard in compartment [#LOC]. " If transverse locate on opposite wall centered between the standard locations 15 inches from compartment edge." | $104 |
| 5380-0283 | Raised bumper lid light EON (EA). Locate under extra capacity lid wired through work light switch. | $113 |
| 5380-0284 | EON step light located (2) each side under horizontal hosebed extrusion to illuminate compartment tops. | $468 |
| 5380-0285 | Step light package body TecNiq T440 4" LED - small. | $526 |
| 5380-0286 | Step light package body TecNiq T440 4" LED - large. | $791 |
| 5380-0287 | Dunnage area lights EON (PR). Evenly spaced on front wall of dunnage area wired through work lights. | $124 |
| 5380-0288 | Compartment light package Amdor Luma-Bar red LED for medium bodies. Includes two lights per compartment (four if transverse). | $5,068 |
| 5380-0289 | Compartment light Amdor red LED for medical cabinet (PR). | $491 |
| 5380-0290 | Compartment light Amdor Luma-Bar red LED 48-74" long additional (EA). Locate [#LOC]. | $374 |
| 5380-0292 | Ground light package Whelen 3" LED - large. | $1,900 |
| 5380-0293 | Step light package Whelen 3" LED - large. | $1,414 |
| 5380-0296 | Compartment light package Amdor Luma-Bar blue LED for small bodies. Includes two lights per compartment (four if transverse). | $3,159 |
| 5380-0297 | Compartment light Amdor LED blue for medical cabinet (EA). | $246 |
| 5380-0298 | Compartment light package Hansen 10mm LED for medium bodies. Includes two lights per compartment (four if transverse). | $2,626 |
| 5380-0299 | Ground light package red Amdor Luma-Bar H2O LED - large. | $1,825 |
| 5380-0300 | Compartment light package Amdor Luma-Bar red LED for small bodies. Includes two lights per compartment (four if transverse). | $3,159 |
| 5380-0302 | Additional TecNiq T440 4" LED ground light (EA). Location: Below [#LOC]. | $132 |
| 5380-0303 | Compartment light Hansen 10mm LED for medical cabinet (PR). | $368 |
| 5380-0304 | Compartment light Amdor red/white LED for medical cabinet (EA). | $313 |
| 5380-0305 | Compartment light package Amdor Luma-Bar red/white LED for medium bodies. Includes two lights per compartment (four if transverse) and switch accessible to driver for red or white activation. | $6,954 |
| 5380-0306 | One (1) TecNiq Dragon LED light shall be provided in [#LOC]. | $128 |
| 5380-0307 | Compartment light package Hansen LED for small bodies. Includes one light per compartment (two if transverse). | $883 |
| 5380-0308 | Compartment light package Hansen LED for medium bodies. Includes one light per compartment (two if transverse). | $1,250 |
| 5380-0310 | Compartment light package Hansen LED for small bodies. Includes two lights per compartment (four if transverse). | $1,766 |
| 5380-0311 | Compartment light package Hansen LED for medium bodies. Includes two lights per compartment (four if transverse). | $2,501 |
| 5380-0313 | Compartment light Hansen 18-37" long additional (EA). Locate [#LOC]. | $181 |
| 5380-0314 | Compartment light Hansen LED 49-65" long additional (EA). Locate [#LOC]. | $191 |
| 5380-0315 | Compartment light Hansen LED for medical cabinet (EA). | $182 |
| 5380-0316 | Compartment light Hansen LED for medical cabinet (PR). | $365 |
| 5380-0317 | Step light additional. Amdor 20" Luma Bar H2O LED. Location: [#LOC]. | $214 |
| 5380-0318 | Whelen model 3SC0CDCR with chrome flange door pan mounted on outboard corners. Location: L2 | $359 |
| 5380-0319 | Light Amdor H2O LED 40" long additional (EA). Locate [#LOC]. | $446 |
| 5390-0000 | Deck light - Unity 12 volt (PR). Location: [#LOC]. | $381 |
| 5390-0001 | Hose bed light Unity. Locate at front area of hose bed. Switched with work light switch in cab. | $185 |
| 5390-0002 | Hose bed light Federal Signal GH Scene. Locate at the front area of hose bed. Switched with work light switch in cab. | $240 |
| 5390-0003 | Hose bed light Truck-Lite. Locate at the front area of the hose bed. Switched with work light switch in cab. | $111 |
| 5390-0004 | Crosslay lights Weldon. Locate on each side at rear of crosslay (SM) or forward of crosslay (TM) approx. 16" from side of body. | $340 |
| 5390-0005 | Crosslay light deck Unity. Locate to rear of crosslay (SM) or forward of crosslay (TM). | $180 |
| 5390-0006 | Deck lights Collins FX-12R (PR). Location: [#LOC]. | $1,085 |
| 5390-0007 | Deck/scene light circuit wiring through chassis reverse. Requires rear deck or scene light. | $81 |
| 5390-0008 | Federal Signal GH scene lights (PR). Switch in cab (driver and officer side facing lights switched separately). Locate [#LOC]. | $448 |
| 5390-0018 | Whelen 600 series 26 degree scenelights (PR) with weatherproof connectors. Switch in cab (driver and officer side facing lights switched separately). Locate [#LOC]. | $354 |
| 5390-0019 | Whelen 700 series 8-32 degree scenelights (PR) with weatherproof connectors. Switch in cab (driver and officer side facing lights switched separately). Locate [#LOC]. | $348 |

| Item No. | Description | |
|---|---|---|
| 5390-0020 | Whelen 900 series Gradient Opti-Scenelight (PR) with weatherproof connectors. Switched in cab (driver and officer side facing lights switched separately). Locate [#LOC]. | $354 |
| 5390-0022 | Crosslay light Truck-Lite. Locate to rear of crosslay (SM) and forward of crosslay (TM as applicable). Switched with work light switch in cab. | $111 |
| 5390-0023 | Tomar 46H13-C 13 degree scene lights (PR) with weatherproof connectors. Switch in cab (driver and officer side lights switched separately). Locate [#LOC]. | $394 |
| 5390-0024 | Deck Light - Truck-Lite (PR). Location: [#LOC]. | $329 |
| 5390-0025 | Cab scene lights are to be switched with cab doors in addition to standard. | $81 |
| 5390-0026 | Federal Signal GH Scene cornering lights (PR) wired to turn signals reverse and work lights. Location: [#LOC] | $858 |
| 5390-0027 | Hosebed light Whelen 600 series 26 degree scene light with Cast Products LH46501 housing. Locate at the front area of hosebed. Switched with worklight switch in cab. | $221 |
| 5390-0029 | Crosslay light Whelen 600 series 26 degree scene light with Cast Products LH46501 housing. Locate to rear of crosslay (SM) and forward of crosslay (TM as applicable). Switched with worklight switch in cab. | $221 |
| 5390-0030 | Deck Lts-Collins FX-6 (PR) Location: [#LOC] | $1,085 |
| 5390-0031 | Crosslay light Federal GH Scene light with Cast Products LH90603 housings (PR). Locate on back of cab 1" below roof between vista windows. | $641 |
| 5390-0034 | Whelen 600 series 26 degree scene lights (PR) with weatherproof connectors. To be used as cornering lights wired to turn signals and four way flashers. Interlock through park brake. Location: [#LOC]. | $354 |
| 5390-0035 | Federal Signal GH Scene Light (PR). Locate (1) at the front area of hosebed and (1) rearward of the crosslays. Switched with worklight switch in cab. Includes diamond plate mounting box. | $813 |
| 5390-0036 | Hose bed light circuit wiring through chassis reverse. Requires hose bed light. | $81 |
| 5390-0038 | 4" LED light (black groument) with diamond plate box mount (PR). Locate (1) at front of hosebed and (1) at the crosslay area. Switch with work light switch. | $737 |
| 5390-0039 | Federal Signal GH Scene lights (PR). Switch in cab (driver and officer side facing lights switched together). Locate [#LOC] | $448 |
| 5390-0040 | Weldon 4 x 6 HID scene lights (PR) with weatherproof connectors. Switch in cab (driver and officer side lights switched separately). Locate [#LOC]. | $1,259 |
| 5390-0041 | Whelen 900 series Gradient Opti-Scene lights (PR) with diamond plate mounting box. Switch in cab (driver and officer side facing lights switched separately). Locate [#LOC]. | $534 |
| 5390-0043 | Crosslay light Trucklite. Locate forward of crosslay. Switched with work light switch in cab. | $111 |
| 5390-0044 | 4" LED light (black groument) with diamond plate box mount at front of hosebed. Switch with work light switch. | $358 |
| 5390-0046 | Federal Signal GH Scene Light (PR). Locate (1) forward facing for preconnect storage lighting and (1) rearward facing for hosebed storage lighting. Both lights mounted in (1) formed box mounted off forward area of body. Box may shift side to side for best lighting application. both lights switched with worklight switch. | $813 |
| 5390-0047 | Federal Signal GH scene Light. Locate rearward facing for hose bed storage lighting. Mounted in (1) formed box mounted off forward area of body. Box may shift side to side for best lighting application. Light switched with worklight switch. | $408 |
| 5390-0048 | Whelen 600 series gradient Super LED scene lights (PR) with weatherproof connectors. Switch in cab (driver and officer side lights switched separately). Locate [#LOC]. | $1,037 |
| 5390-0049 | Whelen 600 series 26 degree scene lights (PR) with LH46001 castings. Switch in cab (side facing lights switched separately). Locate [#LOC]. | $453 |
| 5390-0050 | Whelen 500 series LED scene lights (PR) with weatherproof connectors. To be used as cornering lights wired to turn signals and four way flashers. Interlocked with park brake. Location: [#LOC] | $870 |
| 5390-0051 | Whelen 600 series gradient Super LED scene lights (PR) with weatherproof connectors. To be used as cornering lights wired to turn signals and four way flashers. Location: [#LOC]. | $1,037 |
| 5390-0052 | Federal Signal GH Scene lights (PR) with diamond plate mounting box. Switch in cab (driver and officer side facing lights switched separately). Locate [#LOC]. | $813 |
| 5390-0054 | Hosebed light Trucklite. Locate (1) each side front of hosebed. Switched with work light switch in cab. | $221 |
| 5390-0055 | Light Federal Signal GH Scene. Locate at the front area of hosebed. Switched with worklight switch in cab. Includes diamond plate mounting box. | $408 |
| 5390-0056 | Crosslay light Weldon. Locate to rear of crosslay (SM) or forward of crosslay (TM). Switched with work light switch in cab. | $173 |
| 5390-0057 | Hosebed light Weldon. Locate at front area of hosebed. Switched with work light switch in cab. | $173 |
| 5390-0058 | Deck Lights - Truck-Lite LED model 81380 (PR). Location: [#LOC]. | $417 |
| 5390-0059 | Whelen 600 series 26 degree scene lights (PR) with diamond plate mounting box. Switch in cab (side facing lights switched separately). Locate [#LOC]. | $564 |
| 5390-0066 | Whelen 600 series gradient Super LED scene lights (PR) with weatherproof connectors and diamond plate mounting boxes. Switch in cab (driver and officer side lights switched separately). Locate [#LOC]. | $1,136 |

| Item No. | Description | |
|---|---|---|
| 5390-0068 | Havis Shield 12V HID scene lights model KR-4035X-D (PR). Location(s): [#LOC]. Includes switch in cab for side facing lights. | $1,641 |
| 5390-0069 | Whelen M9 Linear Super LED scene lights (PR). Switched in cab (lights mtd on the sides of apparatus to be switched separately). Locate [#LOC]. | $1,692 |
| 5390-0070 | Crosslay light Collins FX-12. Locate to rear of crosslay (SM) and forward of crosslay (TM as applicable). | $545 |
| 5390-0071 | Hosebed light Collins FX-12. Located center front of hosebed. Switched with work light switch in cab | $545 |
| 5390-0072 | Speedlay Light Federal Signal GH Scene. Locate on front of upper pump module facing downward to illuminate speedlays. Switched with worklight switch in cab. | $240 |
| 5390-0073 | Deck Light - Whelen LED model PFBP12C (PR). Location: [#LOC]. | $1,098 |
| 5390-0075 | Speedlay light Trucklite. Locate forward area of pump module. Switched with work light switch in cab. | $111 |
| 5390-0076 | Hose bed light Truck-Lite LED model 81380. Locate at front of hose bed. Switched with work light switch in cab. | $210 |
| 5390-0077 | Deck Lt-Collins FX-12R (EA) model KR-SB-312 with lift/push up pole. Due to body mount location a position indicator will not be required. Location(s): [#LOC]. | $915 |
| 5390-0081 | Deck Light - Grote LED model 63581 (PR) Location: [#LOC]. | $1,727 |
| 5390-0082 | Whelen 600 series 26 degree scene 24VDC lights (PR) with weatherproof connectors. Switch in cab (driver and officer side facing lights switched separately). Locate [#LOC]. | $381 |
| 5390-0083 | Federal Signal GH Scene light (EA). Switched with work light switch in cab. Locate up high driver rear of body. | $226 |
| 5390-0087 | Whelen M6 Linear Super LED scene lights (PR). Switched in cab (lights mtd on the sides of apparatus to be switched separately). Locate [#LOC]. | $1,215 |
| 5390-0088 | Crosslay light Whelen PFBP12C LED. Locate to rear of crosslay (SM) and forward of crosslay (TM as applicable). Switched with work light switch in cab. | $550 |
| 5390-0089 | Hose bed light Whelen PFBP12C LED. Locate center front of hose bed. Switched with work light switch in cab. | $550 |
| 5390-0090 | Hosebed light Whelen 600 series Super LED scene light with diamond plate box. Locate at the front area of hosebed. Switched with worklight switch in cab. | $570 |
| 5390-0091 | Crosslay light Whelen 600 series 26 degree Super LED scene light with diamond plate box. Locate to rear of crosslay (SM) and forward of crosslay (TM as applicable). Switched with worklight switch in cab. | $570 |
| 5390-0094 | Federal Signal GH Scene light (EA). Switched with work light switch in cab. Locate up high center rear of body. | $226 |
| 5390-0096 | Hosebed light Trucklite LED. Locate (1) in each outer hosebed upper front wall (if equipped) and (2) upper front wall of center hosebed . Switched with work light switch in cab. | $893 |
| 5390-0102 | Crosslay light Truck-Lite LED model 81380. Locate to rear of crosslay (SM) and forward of crosslay (TM as applicable). Switched with work light switch in cab. | $210 |
| 5390-0103 | Whelen 700 series gradient Super LED scene lights (PR) with weatherproof connectors. Switch in cab (driver and officer side lights switched separately). Locate [#LOC]. | $1,006 |
| 5390-0104 | Light Whelen Pioneer Plus model PFP1 with recess mount. Wired through work light switch in cab. Location(s): [#LOC]. | $1,393 |
| 5390-0110 | Hosebed light Grote LED model 63581. Locate center front of hosebed. Switched with work light switch in cab. | $865 |
| 5390-0111 | Crosslay light Grote LED model 63581. Locate to rear of crosslay (SM) and forward of crosslay (TM as applicable). Switched with work light switch in cab. | $865 |
| 5390-0114 | Whelen M6 Linear Super LED hosebed lights (PR) with weatherproof connectors and diamond plate mounting boxes. Locate equally spaced each side at the front area of hosebed. Switched with worklight switch in cab. | $1,397 |
| 5390-0117 | Whelen 700 series gradient Super LED scene lights (PR). To be used as cornering lights wired to turn signals reverse and work lights. Location: [#LOC]. | $1,037 |
| 5390-0118 | Grote 63581 LED scene lights (6). Switch in cab (driver and officer side lights switched separately). Lights located (2) each side of body up high (offset forward and rearward) and (2) at rear of body up high. Wetside only. | $4,148 |
| 5390-0119 | Light Whelen Pioneer Plus model PFP1 with ROM KR-SB-600-W4 pedestal side mount. Switched with work light switch in cab. Location(s): [#LOC]. | $2,784 |
| 5390-0122 | Whelen 900 series model 90C0ENZR Super LED Opti-Scene light (PR) with cast products mounting box. Switch in cab (driver and officer side lights switched separately). Locate [#LOC]. | $1,890 |
| 5390-0123 | Federal Signal model QL97LEDSCENE LED scene light (PR) with weatherproof connectors. Includes switch accessible to driver (driver and officer side lights switched separately). Locate [#LOC]. | $1,013 |
| 5390-0124 | Whelen 600 series gradient Super LED scene lights (3) with weatherproof connectors. Wire through work light switch in cab. Locate back of cab evenly spaced up high. | $1,553 |
| 5390-0126 | Whelen M6 Linear Super LED hosebed light with weatherproof connector and diamond plate mounting box. Locate at the front area of hosebed. Switched with work light switch in cab. | $700 |

| Item No. | Description | |
|---|---|---|
| 5390-0127 | Light Whelen 600 series 26 degree Super LED scene light. Locate to rear of body driver side centered vertically between tail light and upper rear warning. Switched with work-light switch in cab. | $570 |
| 5390-0129 | Hose bed light FRC LED900 with diamond plate mounting box. Locate [#LOC]. Switched with worklight switch in cab. | $942 |
| 5390-0130 | Deck light Whelen PAR-36 model PFBP12C LED (PR). Switched with work light switch in cab. Location: [#LOC]. | $1,098 |
| 5390-0131 | Crosslay light deck Unity. Locate light on the drivers side rearward of the crosslay door mounted on the Hot Shot II pan cover lid. | $180 |
| 5390-0132 | Warning light Federal Signal QL64-BACKUP (PR) white with clear lens. Surface mounted with bezel. Location: [#LOC] | $632 |
| 5390-0133 | Deck lights - Unity 12 volt LED spot (PR). Location: [#LOC]. | $1,040 |
| 5390-0136 | Whelen M9LZC Linear Super LED scene lights (PR) includes flange. Switched in cab (lights mounted on the sides of apparatus to be switched separately). Locate [#LOC]. | $1,568 |
| 5390-0137 | Whelen M9 Linear Super LED scene lights (PR) with weatherproof connectors and diamond plate mounting boxes. Switch in cab (driver and officer side lights switched separately). Locate [#LOC]. | $1,870 |
| 5390-0139 | Crosslay light Whelen PFBP12C LED (PR). Locate on each side at rear of crosslay (SM) or forward of crosslay (TM). Location: [#LOC]. Switched with work light switch in cab. | $1,098 |
| 5390-0140 | Whelen 700 series gradient Super LED scene light (EA) with weatherproof connector(s). Switch in cab (driver and officer side lights if applicable switched separately). Locate [#LOC]. | $493 |
| 5390-0141 | Hosebed light Trucklite LED. Locate (1) in driver outer hosebed upper front wall and (2) upper front wall of center hosebed . Switched with work light switch in cab. | $669 |
| 5390-0143 | Crosslay light deck Unity. Locate to driver side rear of crosslay. | $180 |
| 5390-0144 | Unity deck light with model TP-1-I internal pull-up pole. Includes switch on lighthead and driver side overhead console. Location: [#LOC]. | $611 |
| 5390-0145 | EA (1) Collins FX-12 w/Internal Pole. Locate (1) Drivers side in deck gun channel. Light to serve as hosebed/crosslay lighting when applicable. | $945 |
| 5390-0146 | Whelen M6 series gradient Super LED scene lights (PR) with weatherproof connectors. To be used as cornering lights wired to turn signals and four way flashers. Location: (1) each side offset rearward of rear most axle. | $1,513 |
| 5390-0149 | Whelen 900 series model 90C0ENZR Super LED Opti-Scene light (EA) with diamond plate mounting box. Switch in cab (driver and officer side lights switched separately). Locate [#LOC]. | $946 |
| 5390-0150 | Whelen 900 series model 90C0ENZR Super LED Opti-Scene light (EA) with cast products mounting box. Switch in cab (driver and officer side light(s) switched separately). Locate [#LOC]. | $946 |
| 5390-0151 | Whelen M6 Linear Super LED scene lights (PR) with weatherproof connectors and diamond plate mounting boxes. Location: [#LOC]. Switched with worklight switch in cab. | $1,397 |
| 5390-0152 | Whelen 600 series gradient Super LED surface mounted scene lights (PR) with weatherproof connectors. Switch in cab (driver and officer side lights switched separately). Locate [#LOC]. | $1,037 |
| 5390-0154 | Weldon model 3010-2600-30 scene lights (PR) with diamond plate mounting box. Switch in cab (driver and officer side facing lights switched separately). Locate [#LOC]. | $770 |
| 5390-0155 | Hose bed light Amdor H2O. Locate at the front area of hose bed. SideStacker only. Switched with work light switch in cab. | $354 |
| 5390-0156 | Federal Signal model QL97LEDSCENE LED scene light (EA) with weatherproof connectors. Includes switch accessible to driver (driver and officer side lights switched separately). Locate [#LOC]. | $508 |
| 5390-0157 | Amdor Lumabar strip light on each side of the hosebed side upper extrusions. Switched with work light switch in cab. | $1,206 |
| 5390-0159 | Whelen M6 Linear Super LED crosslay light with weatherproof connector and diamond plate mounting box. Locate to rear of crosslay (SM) and forward of crosslay (TM as applicable). Switched with work light switch in cab. | $700 |
| 5390-0160 | Whelen M6 series gradient Super LED scene lights (PR) with weatherproof connectors. To be used as cornering lights wired to turn signals and four way flashers. Location: (1) each side front bumper gravelshield offset rearward. | $1,513 |
| 5390-0161 | Whelen M9 Linear Super LED scene lights (PR) with weatherproof connectors and smooth plate mounting boxes painted job (2-tone if applicable) color. Switch in cab (driver and officer side lights switched separately). Locate [#LOC]. | $1,926 |
| 5390-0162 | Hose bed lights (2) Federal Signal GH Scene. Locate in the upper front wall of the hose bed. One (1) each side equally spaced from the outside of the hose bed. Switched with the work light switch in cab. | $478 |
| 5390-0163 | ROM V4 LED strip lights for NFPA hose bed lighting. The lights to be mounted inside hose bed cover thru cover plate on outer skin. Light will illuminate the hose bed area thru slots in the inner skin. | $1,711 |
| 5390-0164 | Whelen 900 series model 9SC0ENZR Super LED Opti-Scene light (PR) with weatherproof connectors. Switch in cab (driver and officer side lights switched separately). Locate [#LOC]. | $1,710 |
| 5390-0165 | Whelen 900 series model 9SC0ENZR Super LED Opti-Scene light (PR) with diamond plate mounting box. Switch in cab (driver and officer side lights switched separately). Locate [#LOC]. | $1,890 |
| 5390-0166 | FRC LED900 Scene light (EA). Switch in cab (driver and officer side lights switched separately). Locate [#LOC]. | $852 |

| Item No. | Description | |
|---|---|---|
| 5390-0168 | Hosebed light Trucklite model 44 LED (5). Locate equally spaced on upper front wall of hosebed . Switched with work light switch in cab. | $1,116 |
| 5390-0169 | Deck light FireTech model FT-WL3500-60 LED (PR). Switched with work light switch in cab. Location: [#LOC]. | $788 |
| 5390-0170 | Whelen M6 Linear Super LED scene light (EA). Switched in cab (lights mtd on the sides of apparatus to be switched separately). Locate [#LOC]. | $609 |
| 5390-0171 | Whelen M6 Linear Super LED hosebed lights (PR) with weatherproof connectors and smooth plate mounting boxes painted Durabak black. Locate equally spaced each side at the front area of hosebed. Switched with worklight switch in cab. | $1,439 |
| 5390-0172 | Amdor Lumbar H2O LED strip lights for NFPA hose bed lighting. The lights to be mounted inside hose bed cover thru cover plate on outer skin. Light will illuminate the hose bed area thru slots in the inner skin. | $1,711 |
| 5390-0173 | Federal Signal model 64LEDSCENE LED scene light (PR) with weatherproof connectors. Includes switch accessible to driver (driver and officer side lights switched separately). Locate [#LOC]. | $1,059 |
| 5390-0175 | Light Whelen Pioneer Plus model PFP1 with pedestal side mount. Switched with work light switch in cab. Location(s): [#LOC]. | $3,110 |
| 5390-0176 | Hose bed light ROM V4 LED 42-72" long. Locate forward area of hose bed up high. Switched with work light switch in cab. | $456 |
| 5390-0177 | Crosslay light ROM V4 LED 42-72" long. Locate in module at cross lays. Switched with work light switch in cab. | $456 |
| 5390-0178 | Light Whelen PFBP6C LED. Locate above L2 on compartment top. Switched through ignition. | $500 |
| 5390-0179 | Crosslay lights EON (4). Locate evenly spaced up high on back of cab to illuminate crosslays. | $482 |
| 5390-0180 | Crosslay light Truck-Lite LED model 81380. Locate on the forward upper surface of the pump module over the speedlay module to light from above during hose loading operations. Switched with work light switch in cab. | $210 |
| 5390-0181 | Whelen M6 series gradient Super LED scene lights (PR) with weatherproof connectors. To be used as cornering lights wired to turn signals and four way flashers. Location: [#LOC]. | $1,513 |
| 5390-0182 | Crosslay light Amdor H2O. Locate at the front body above crosslay. Switched with work light switch in cab. | $493 |
| 5390-0183 | Crosslay light Truck-Lite LED model 81380. Locate on front of body up high. Switched with work light switch in cab. | $210 |
| 5390-0184 | FireTech 8" 12V double stack mini brow light (PR). Includes switch in cab (driver and officer side facing lights switched separately). Location: [#LOC]. | $2,062 |
| 5390-0185 | Hose bed light Federal Signal 64LEDSCENE. Locate at the front area of hose bed. Switched with work light switch in cab. Includes diamond plate mounting box. | $631 |
| 5390-0186 | FRC SPA900-Q70 Scene light (PR). Switch in cab (driver and officer side lights switched separately). Locate [#LOC]. | $1,701 |
| 5390-0187 | Whelen 900 series model 9SC0ENZR Super LED Opti-Scene light (1 EA) with weatherproof connector. Switch in cab (driver and officer side lights switched separately). Locate [#LOC]. | $855 |
| 5390-0188 | Diamond plate mounting boxes (4). For use with scene lights and/or warning lights. Locate on driver and officer side forward and rearward compartment tops outboard; boxes to be full depth of compartment top. | $894 |
| 5390-0191 | Whelen M9 Linear Super LED scene lights (EA). Switched in cab (lights mtd on the sides of apparatus to be switched separately). Locate [#LOC]. | $846 |
| 5390-0193 | FRC SPA900-Q70 Scene light (PR) with diamond plate mounting box. Switch in cab (driver and officer side lights switched separately). Locate [#LOC]. | $1,882 |
| 5390-0194 | Whelen PELCC crosslay lights LED (PR). Wired through work light switch. Location: (1) each side up high back of cab. | $626 |
| 5390-0196 | FireTech 8" 12V double stack mini brow light (PR) powder coated black. Includes switch in cab (driver and officer side facing lights switched separately). Location: [#LOC]. | $2,062 |
| 5390-0197 | Deck light FireTech model FT-WL3500-60-C driver FT-WL3500-60 officer LED (PR). Driver includes rear camera; requires Vista display. Switched with work light switch in cab. Location: [#LOC]. | $1,515 |
| 5390-0198 | Hose bed light FRC LED model SPA900-Q70. Locate at front of hose bed. Switched with work light switch in cab. | $851 |
| 5390-0199 | Whelen 700 series gradient Super LED scene lights (PR) with LH37101 castings and weatherproof connectors. Switch in cab (driver and officer side lights switched separately). Locate [#LOC]. | $1,095 |
| 5390-0200 | Federal Signal Commander model COM7K-900 scene light (PR). Switch in cab (driver and officer side lights switched separately). Locate [#LOC]. | $1,701 |
| 5390-0201 | Hosebed light Whelen model 3SC3CDCR 3" LED. Locate even spaced on upper front wall center hosebed. Switched with work light switch in cab. | $524 |
| 5390-0202 | Code3 model 79SC LED scene light (PR) with chrome bezel (as applicable) and weatherproof connectors. Switch in cab (driver and officer side facing lights switched separately). Locate [#LOC]. | $1,187 |
| 5390-0203 | Hosebed light Trucklite LED. Locate even spaced on front wall of hosebed. Switched with work light switch in cab. | $669 |

| Item No. | Description | |
|---|---|---|
| 5390-0204 | Whelen M7 Linear Super LED scene lights (PR). Switched in cab (lights mtd on the sides of apparatus to be switched separately). Locate [#LOC]. | $698 |
| 5390-0205 | Code3 model 79SCBZ LED scene light (PR) with weatherproof connectors. Switch in cab (driver and officer side facing lights switched separately). Locate [#LOC]. | $1,187 |
| 5390-0207 | FRC SPA900-Q70 Scene light (EA). Switch in cab (driver and officer side lights switched separately). Locate [#LOC]. | $851 |
| 5390-0208 | Whelen M6 Linear Super LED scene light in a diamond plate box (EA). Switched in cab (lights mtd on the sides of apparatus to be switched separately). Locate [#LOC]. | $609 |
| 5390-0211 | Hosebed light Whelen M6 Linear Super LED scene light with diamond plate box. Locate at the front area of hosebed. Switched with worklight switch in cab. | $660 |
| 5390-0214 | Federal Signal model 64LEDSCENE LED scene light (PR) with diamond plate mounting box and weatherproof connectors. Includes switch accessible to driver (driver and officer side lights switched separately). Location: [#LOC]. | $1,221 |
| 5390-0215 | Deck Lights - Optronics Model TLL44 (PR). Location: [#LOC]. | $367 |
| 5390-0216 | Hose bed light Optronics LED model TLL44 Locate at front of hose bed. Switched with work light switch in cab. | $210 |
| 5390-0217 | Crosslay light Optronics LED model TLL44. Locate to rear of crosslay (SM) and forward of crosslay (TM as applicable). Switched with work light switch in cab. | $210 |
| 5390-0218 | Hose bed light EON (4) with rubrail extrusion. Locate at front area of hose bed. Switched with work light switch in cab. | $610 |
| 5390-0219 | Hosebed light FireTech model FT-MB-9-TR powder coated black with trunnion mount. Switched with work light switch in cab. | $717 |
| 5390-0220 | Whelen 700 series gradient Super LED scene lights (PR) with weatherproof connectors and diamond plate mounting box. Switch in cab (driver and officer side lights switched separately). Locate [#LOC]. | $1,164 |
| 5390-0221 | Whelen M6 Linear Super LED scene lights (PR) with black bezels. Switched in cab (lights mtd on the sides of apparatus to be switched separately). Locate [#LOC]. | $1,215 |
| 5390-0222 | Deck light FireTech model FT-WL3500-60-W LED (PR). Switched with work light switch in cab. Location: [#LOC]. | $788 |
| 5390-0223 | Hose bed light LED Rigid-Dually D2 model 50151with defussed lens. Locate at front of hose bed. Switched with work light switch in cab. | $638 |
| 5390-0224 | Crosslay light LED Rigid-Dually D2 model 50151with defussed lens. Locate to rear of crosslay (SM) and forward of crosslay (TM as applicable). Switched with work light switch in cab. | $638 |
| 5390-0227 | Crosslay light LED TecNiq model P06-WBFP-1. Locate to rear of crosslay (SM) and forward of crosslay (TM as applicable). Switched with work light switch in cab. | $183 |
| 5400-0003 | Engine compartment light (EA). | $131 |
| 5400-0004 | Incandescent pump panel light - additional (EA). Location: [#LOC]. | $98 |
| 5400-0005 | Pump panel LED light package with (2) Whelen strip lights per side pump panel. Not available on panels over 45" wide. Side mount only. | $819 |
| 5400-0006 | Pump panel LED light package with (3) lights per side pump panel. Pump panels over 45" may require additional lights. Side mount only. | $1,176 |
| 5400-0007 | LED pump panel light - additional (EA). Location: [#LOC]. | $202 |
| 5400-0008 | (1) pump panel light over the pump control area to be wired to come on when pump shift is placed in pump. (Side mount forward light noted Top Mount is center light.) | $42 |
| 5400-0009 | Pump panel LED light package - top mount. Includes (2) lights per side pump panel and (3) lights for top mount panel. Side pump panels over 45" wide may require additional lights. Top mount only. | $1,376 |
| 5400-0010 | Incandescent pump compartment light (EA). | $141 |
| 5400-0011 | LED pump compartment light (EA). | $378 |
| 5400-0020 | Federal NightFighter light with internal pole. Locate [#LOC]. Switched on light head. | $1,310 |
| 5400-0021 | Federal NightFighter Light with External Pole. Locate [#LOC]. Switched on light head. | $2,268 |
| 5400-0030 | Fog Lights Quartz Halogen (PR) [#COL] and located [#LOC]. | $286 |
| 5400-0031 | Pair of Cab Dome Large Lights mounted driver and officer side front. N/A on E-One Chassis. Required on Comm Chassis. | $78 |
| 5400-0032 | Pair of Cab Dome Large Lights mounted driver and officer side Rear. N/A on E-One Chassis or two door commercial chassis. Required on Comm Chassis. | $78 |
| 5400-0033 | Cab Dome Lts Red/White 4" incandescent. White light wired through door and light assembly mounted rocker switch. Red light through light assembly mounted rocker switch. | $588 |
| 5400-0035 | Dome Lts White 4" incandescent. Includes assembly mounted rocker switch. Requires one for each cab door. | $159 |
| 5400-0037 | Dome Lts Red/White Incandescent. Package includes two lights mounted in the front and two mounted in the rear of the cab. White light wire through door and light assembly mounted switch. Red light through light assembly mounted switch. | $564 |
| 5400-0038 | Spotlights 6" Unity (PR) cab post mount. | $463 |
| 5400-0039 | Spotlight Specialty 2150 hand held located on officer's side of cab dash - hardwired. | $396 |

| Item No. | Description | |
|---|---|---|
| 5400-0041 | Spotlight Federal Visibeam II Remote. If one is selected it will be located centered on cab roof mounted on a bracket. If two are selected they will be located one each side of cab roof to rear of light bar. | $698 |
| 5400-0042 | Map light Sunnex [#LOC]. | $339 |
| 5400-0043 | Maplight-Little Lt 18" Flex [#LOC]. Includes on/off switch. | $228 |
| 5400-0047 | Pump panel light package with (3) lights per side pump panel. Pump panels over 45" may require additional lights. Side mount only. | $661 |
| 5400-0048 | Pump panel light package - top mount. Includes (2) lights per side pump panel and (3) lights for top mount panel. Top mount only. | $768 |
| 5400-0054 | Spotlight Specialty 2150 hand held located on officer's side of cab dash w/12V receptacle. | $396 |
| 5400-0057 | Dome lts red/white 4" LED (4). Lights to be located two front and two rear. White light wired through door and light assembly mounted rocker switch. Red light through light assembly mounted rocker switch. | $1,523 |
| 5400-0060 | Spotlight Specialty 2150 hand held located on driver's side 3 x 3 post - hardwired. | $396 |
| 5400-0061 | Golight model 2049 remote control spotlight with black housing. If one is selected it will be located centered on cab roof on a pedestal to rear of light bar. If two are selected they will be located one each side of cab roof to rear of light bar. | $872 |
| 5400-0062 | Code 3 model GLB3200 remote control spotlight with black housing. If one is selected it will be located centered on cab roof on a pedistal to rear of lightbar. If two are selected they will be located one each side of cab roof to rear of lightbar. | $1,245 |
| 5400-0064 | Dome Lts Red/White 4" LED (5). Lights to be located two front and three rear. White light wired through door and light assembly mounted rocker switch. Red light through light assembly mounted rocker switch. | $1,900 |
| 5400-0065 | Map light Littlite 18" flexible LED. Location: [#LOC]. | $262 |
| 5400-0068 | Pump panel LED light package with (3) Whelen 500 lights per side pump panel. Center light on each side to be wired through pump engage. Side mount only. | $1,274 |
| 5400-0069 | Map light Sunnex HS 761-00 with frosted lens. Location: Officer overhead console inboard of AC vent. | $296 |
| 5400-0070 | Whelen 700 Series cornering lights (PR) located on ends of bumper gravel shield ahead of warning lights. Lights to have 8-32 degree internal optics and chrome flange. Includes cornering light relay circuits. | $756 |
| 5400-0071 | Spotlight Collins CL-12-M hand held located on officer's side of cab dash hardwired. Includes Handlelok 1004 bracket. | $477 |
| 5400-0074 | Pump panel LED light package. Includes (2) Whln LED strip lights driver side above upper panel (2) Whln LED strip lights officer side mid-way up on upper hinged panel (2) 4" grommet mount lights on driver side front compt face (1) in line with side discharges and (1) at upper pump panel split and (1) 4" grommet mount light on officer side front compt face down low. | $2,068 |
| 5400-0075 | Dome Lts Red/White LED/Incandescent. Package includes two red/white incandescent lts mtd in the frt of the cab and two 4'' red/white LED lts mtd in the rear of the cab. White lt wired through door and lt assy mounted switch. Red lt wired through lt assy mounted switch. | $1,044 |
| 5400-0076 | Golight model 2020 permanent spotlight. Location: Centered top of lightbar. | $690 |
| 5400-0080 | FRC Night Master light with external push-up pole. Locate [#LOC]. Switched on light head. | $1,255 |
| 5400-0081 | Golight model 2067 remote control spot light with white housing. If one is selected it will be located centered on cab roof on a pedestal to rear of light bar. If two are selected they will be located one each side of cab roof to rear of light bar. | $872 |
| 5400-0082 | Maplight-Little Lt 18" Flex [#LOC]. Includes dimmer switch. | $228 |
| 5400-0083 | Map light Sunnex HS 761-20 with red lens and dimmer switch. Location: Officer overhead console inboard of AC vent. | $296 |
| 5400-0084 | SpotLt-Fed VisibeamII Remote. If one is select it will be located center on forward vista roof. If two are selected they will be located one each side front corners of vista cab roof. | $698 |
| 5400-0085 | Enclose pump panel LED light package with (3) lights per side pump panel. Side mount only. | $1,568 |
| 5400-0086 | Spotlight Specialty 2150 hand held located on font of map box - hardwired. | $396 |
| 5400-0087 | Map light Sunnex model HS741-27 with red lens. Location: [#LOC]. | $316 |
| 5400-0089 | Federal Signal Ultrastar Green LED w/ clear lens. Locate on L1 on compt top. Includes switch on pump panel labeled "Hydrant". | $690 |
| 5400-0090 | Spotlight Specialty 2150 hand held located on officer's side 3 x 3 post - hardwired. | $396 |
| 5400-0091 | Zico cornering light (PR) with polished stainless steel housing model #ZQL-SS-H7614 wired through turn signals. Includes cornering light relay. Lights to be directed downward. Location: (1) each side of gravel shield (forward). | $1,037 |
| 5400-0092 | Weldon pump panel LED light package with (3) lights per side pump panel. Pump panels over 45" may require additional lights. Side mount only. | $959 |
| 5400-0097 | Maplight-Havis Shield 12" Flex LED. Location: [#LOC]. | $254 |
| 5400-0098 | Pump panel LED light package with (3) Whelen 4"round lights per side pump panel. Pump panels over 45" may require additional lights. Side mount only. | $1,176 |

| Item No. | Description | |
|---|---|---|
| 5400-0104 | Spotlight Specialty 2150 hand held located on officer's side side facing engine cover offset forward below cab dash - hardwired. | $396 |
| 5400-0105 | Weldon pump panel LED lighting package with (3) lights for pump operator panel (with shield) and (3) lights for rear pump panel. Rear Mount only. | $474 |
| 5400-0106 | Pump panel incandescent lighting package with (3) lights for pump operator panel (with shield) and (3) lights for rear pump panel. Rear Mount only. | $661 |
| 5400-0107 | Weldon pump panel LED light package - top mount. Includes (2) lights per side pump panel and (3) lights for top mount panel. Side pump panels over 45" wide may require additional lights. Top mount only. | $1,082 |
| 5400-0109 | Weldon LED pump panel light - additional (EA). Location: [#LOC]. | $150 |
| 5400-0111 | Whelen 600 series Super LED blue. Locate driver side rear compartment face below upper level warning. Includes switch on pump panel labeled "HYDRANT". | $524 |
| 5400-0112 | Backing light (PR) Innovative LIghting with polished housing model #580-0200-1 light bulb is a halogen MR16. Location: [#LOC]. | $371 |
| 5400-0125 | SpotLt-Fed VisibeamII Remote. Officer side of cab roof to rear of lightbar mounted on a bracket. | $698 |
| 5400-0126 | Side mount pump module LED lighting. Includes (3) pump panel lights - (2) driver side and (1) officer side. | $381 |
| 5400-0127 | Top mount pump module LED lighting. Includes (3) lights located along the upper top mount control panel (2) side pump panel lights - (1) driver side and (1) officer side and (2) top mount walkway lights. | $873 |
| 5400-0129 | Spotlight Collins CL-12-M hand held located on officer's side of cab dash - hardwired. Includes Handlelok 1004 bracket shipped loose. | $477 |
| 5400-0130 | Spotlight Optronics Blue Eye model KB4003 hand held located on officer's side of cab dash - hardwired. | $237 |
| 5400-0131 | Pump panel LED light package Amdor Luma Bar H2O. Includes (1) light per side pump panel (2 driver if split panel). Side mount only. | $960 |
| 5400-0132 | Incandescent pump panel and runningboard lighting package. Includes (3) lights shield mounted on the driver side and (1) 4" recessed light mounted on the officer side compartment face. | $661 |
| 5400-0133 | Golight model 2067 remote control spotlight with white housing. Locate (1) each side cab corner outboard of forward facing lightbar without pedestal. Requires additional side facing warning lights to meet NFPA. | $872 |
| 5400-0137 | Pump panel LED light package for side mount eMAX. Includes (6) TecNiq EON lights with S/S housings located (3) each side above lower side intake/discharge panels. Includes S/S light shields. SM eMAX only. | $392 |
| 5400-0139 | Pump panel LED light package for top mount. Includes (12) TecNiq EON lights with S/S housings (6) for TM panel and (3) each side for lower side intake / discharge panels. Includes S/S light shields for side panels. | $699 |
| 5400-0145 | Pair of Cab Dome Large Lights mounted driver (clear) and officer (red) side front. N/A on E-One Chassis. Required on Comm Chassis. | $78 |
| 5400-0148 | Maplight-Little Lt 12" Flex LED. Location: [#LOC]. | $262 |
| 5400-0149 | Pump panel Amdor H2O LED light package with (3) lights per side pump panel. Pump panels over 45" may require additional lights. Side mount only. | $968 |
| 5400-0151 | Pump compartment light EON LED. Wired to work light. | $226 |
| 5400-0154 | Spotlight Specialty 2150 hand held located on center of cab dash with plug-in connector. | $396 |
| 5400-0155 | Cab Dome Large Light (PR). (1) mounted centered centered in the front and rear headliners. N/A on E-0ne Chassis. Required on Comm Chassis. | $78 |
| 5400-0156 | Spotlight Collins CL-12-M handheld. Light to be hardwired and bracket (Handlelok 1004) to be mounted to the rear of the center console. | $477 |
| 5400-0157 | Spotlight Whelen PAR46 Super LED hand held located on officer's side of cab dash - hardwired. Mounted to not obstruct driver view of passenger corner mounted mirror (if equipped). | $649 |
| 5400-0158 | Spotlights 6" Unity LED (EA) cab post mount. Location: Officer side cab A post. | $540 |
| 5400-0159 | Optronics model QH-100 handheld 12v spotlight. To be hardwired on officer's side of cab dash. | $154 |
| 5400-0164 | Spotlights 6" Unity LED (PR) cab post mount. | $1,077 |
| 5400-0165 | Pump compartment light EON LED. Light shall be switched from the cab dash with the work light switch. | $226 |
| 5400-0166 | Fog lights (PR) Perlux 500 series model 05001-5 clear fog Light located [#LOC]. | $620 |
| 5400-0167 | (1) pump panel light over the pump control area to be wired to come on when pump shift is placed in pump. (Rearward light.) | $42 |
| 5400-0168 | Whelen LED pump compartment light (EA). | $287 |
| 5400-0171 | Compartment light EON LED IPOS. Location of light(s): [#LOC]. | $148 |
| 5400-0172 | Pump panel LED light package for rear mount. Includes (3) Tecniq EON lights with S/S housings. Includes S/S light shield. Rear mount only. | $313 |
| 5400-0173 | Spotlight Whelen PAR46 Super LED hand held located on officer's side of cab dash with plug-in connector. | $649 |

| Item No. | Description | |
|---|---|---|
| 5400-0174 | Pump panel light package with (3) On Scene Solutions lights per side pump panel. Pump panels over 45" may require additional lights. Side mount only. | $1,116 |
| 5400-0180 | Spotlight Collins CL-12-M hand held located on officer's side of cab dash hardwired. Includes Handlelok 1004 bracket which shall be mounted at time of final inspection. | $477 |
| 5400-0181 | Pump panel LED light package for side mount. Includes (6) Tecniq EON lights with S/S housings located (3) ea side. The center light shall be green as wired to activate when pump shift is placed in pump. Includes S/S light shields. Requires separate pump panel light wiring instruction. | $392 |
| 5400-0182 | (1) pump panel light (center light) over the pump control area to be wired to come on when pump shift is placed in pump. | $42 |
| 5400-0183 | Side mount pump module LED lighting. Includes (3) pump panel lights - (2) driver side and (1) officer side. | $464 |
| 5400-0184 | Top mount pump module LED lighting. Includes (3) lights located along the upper top mount control panel (2) side pump panel lights - (1) driver side and (1) officer side and (2) top mount walkway lights. | $657 |
| 5400-0185 | LED pump compartment light (EA). | $70 |
| 5400-0186 | Interior rescue module dome light Red/White LED (PKG). Package includes (4) TecNiq model E06-WS0R-1 red/white LED lights evenly spaced on ceiling. Includes (1) switch for red and (1) for white lights on interior wall. | $831 |
| 5400-0187 | Map light Sunnex HS 761-00 with frosted lens. Location: Driver and officer overhead console inboard. | $296 |
| 5400-0188 | Golight model 30201 remote control HID spot light with white housing. If one is selected it will be located centered on cab roof on a pedestal to rear of light bar. If two are selected they will be located one each side of cab roof to rear of light bar. | $948 |
| 5400-0189 | Golight model 2020 permanent spotlight with white housing. Centered on forward cab roof. | $872 |
| 5400-0190 | Weldon/EON pump panel LED light package with (1) Weldon (2) EON driver pump panel and (3) Weldon officer pump panel. Pump panels over 45" may require additional lights. Side mount only. | $959 |
| 5400-0191 | Class 1 provided / E-ONE installed pump panel and ground lights for pump module. Includes (1) 18" LED strip light (2) 24" LED strip light and (2) ground lights. | $851 |
| 5400-0192 | Amdor H2O pump panel LED light package - top mount. Includes (2) lights per side pump panel and (3) lights for top mount panel. Side pump panels over 45" wide may require additional lights. Top mount only. | $1,120 |
| 5400-0194 | (1) pump panel light (center light) over each side mount pump control area to be wired to come on when pump shift is placed in pump. | $84 |
| 5400-0196 | TecNiq LED backing lights (PR) model E960. Location: [#LOC]. | $449 |
| 5400-0198 | Map light Sunnex LED model SL9-220. Location: [#LOC]. | $730 |
| 5400-0199 | Pump panel light additional EON LED. Locate (2) driver side up high and (2) officer side up high. | $121 |
| 5400-0200 | Spotlights 6" Unity LED (PR) cab post mount. Includes black housings. | $1,077 |
| 5400-0202 | Spotlight Whelen PAR46 Super LED hand held located on officer's side of cab dash - hardwired. Ship bracket loose. | $649 |
| 5400-0204 | Map light Sunnex HS 761-00 with frosted lens. Location: officer overhead console inboard. | $296 |
| 5400-0205 | Pump panel light additional EON LED. Locate driver side pump panel above additional switches wired through park brake. | $121 |
| 5400-0206 | Golight model 2067 remote control spotlight with white housing. Locate driver side cab roof ahead of vista. Locate controller center of dash offset to driver. | $872 |
| 5400-0207 | Weldon pump panel LED light package with (3) lights on officer side pump panel. Pump panels over 45" may require additional lights. Side mount only. For use with driver enclosed pump panel only. | $480 |
| 5400-0208 | Pump panel Amdor H2O LED light package with (2) lights per side pump panel. Side mount only. | $645 |
| 5400-0209 | Pump panel Amdor H2O LED red light package with (3) lights per side pump panel. Pump panels over 45" may require additional lights. Side mount only. | $968 |
| 5400-0210 | Fog Lights FireTech FT-WL3500-60 (PR). Location: [#LOC]. | $1,014 |
| 5400-0211 | Whelen 600 series Super LED green. Locate driver side rear of body below upper level warning. Includes switch on pump panel labeled "HYDRANT". | $618 |
| 5400-0212 | Pump compartment light EON LED. Requires seperate switching. | $226 |
| 5400-0213 | Map light Sunnex SL9-200B10L. Location: officer overhead console inboard. | $457 |
| 5400-0214 | Walkway lighting in place of standard. Nine(9) equally spaced Whelen 0S Series Super-LED white illumination lights shall be provided with a 45 degree bezel. | $238 |
| 5400-0216 | Golight model 20214 remote control LED spot light with black housing. Officer side rear of light bar. | $1,315 |
| 5400-0218 | Golight model 20214 remote control LED spot light with black housing. If one is selected it will be located centered on cab roof on a pedestal to rear of lightbar. If two are selected they will be located one each side of cab roof to rear of lightbar. | $1,315 |
| 5400-0219 | EON LED pump panel light - additional (EA). Location: [#LOC]. | $71 |
| 5400-0223 | LED pump panel light - additional amber (EA). Location/function: center above pump operator panel wired through pump shift only. | $150 |
| 5450-0003 | Quartz light KwikRaze 500W/110V model KR-905-I with internal telepole. Location(s): [#LOC] | $706 |

| Item No. | Description | |
|---|---|---|
| 5450-0004 | Quartz light KwikRaze 500W/110V model KR-SB-505-W/2-I with external telepole. Location(s): [#LOC] | $1,108 |
| 5450-0005 | Quartz light Kwik Raze 500W/110V portable. Location(s): [#LOC]. | $449 |
| 5450-0006 | Quartz light KwikRaze 500W/110V model KR-SB-805-TM-I with external mount tripod telepole. Requires 110V receptacle. Location(s): [#LOC] | $1,644 |
| 5450-0007 | Quartz light Kwik Raze 500W/110V with recess mount. Location(s): [#LOC]. | $1,023 |
| 5450-0008 | Quartz light Fire Research Focus 750W/110V model FCA510E-S75-SW with internal pull-up pole. Location(s): [#LOC]. | $1,562 |
| 5450-0009 | Quartz light Fire Research Focus 750W/110V model FCA530-S75-SR-SW with side mount push-up pole. Location(s): [#LOC]. | $1,651 |
| 5450-0010 | Quartz light Fire Research Focus 1000W/240V model FCA200-M12 with recess mount. Location(s): [#LOC]. | $877 |
| 5450-0011 | Quartz light Fire Research Optimum 900W/240V model OPA200-R90 with recess mount. Location(s): [#LOC]. | $1,147 |
| 5450-0012 | Quartz light Fire Research Focus 750W/110V model FCA570-S75 without pole. Location(s): [#LOC]. | $1,218 |
| 5450-0015 | Quartz light Fire Research Focus 750W/120V model FCA600-S75-ON-FC603 with 40" telescopic tripod pole. Location(s): [#LOC]. | $1,670 |
| 5450-0016 | Quartz light Fire Research Focus 750W/110V model FCA540-S75-SW with side mount pull up pole. Location(s): [#LOC]. | $1,622 |
| 5450-0019 | Quartz light Fire Research Focus 750W/110V model FCA802-S75-01 with brow mount (EA). Location(s): [#LOC]. | $945 |
| 5450-0020 | Quartz light Fire Research Focus 1500W/240V model FCA600-M15-ON-FC603 with telescopic tripod pole. Location(s): [#LOC]. | $1,761 |
| 5450-0021 | Quartz light Fire Research Optimum 750W/110V model OPA570-S75 without pole. Location(s): [#LOC]. | $1,291 |
| 5450-0022 | Quartz light Fire Research Optimum 150W/12V model OPA802-HD15-01 with brow mount (EA). Includes switch accessible to driver. Location(s): [#LOC]. | $1,593 |
| 5450-0023 | Quartz light Fire Research Optimum 150W/12V model OPA510E-HD15-SW with internal pole. Includes switch accessible to driver. Location(s): [#LOC]. | $1,907 |
| 5450-0024 | Quartz light Fire Research Optimum 750W/110V model OPA510E-S75-SW with internal pull up pole. Location(s): [#LOC]. | $1,610 |
| 5450-0028 | Quartz light Fire Research Optimum 750W/110V model OPA530-S75-SR-SW with side mount external pole. Location(s): [#LOC]. | $1,697 |
| 5450-0030 | Quartz light Fire Research Optimum 750W/110V model OPA600-S75-ON-OP603 with 40" telescopic tripod pole. Location(s): [#LOC]. | $1,688 |
| 5450-0031 | Quartz light Fire Research Optimum 750W/110V model OPA802-S75-01 with brow mount (EA). Location(s): [#LOC]. | $1,010 |
| 5450-0032 | Quartz light Fire Research Optimum 900W/240V model OPA600-R90-ON-OP603 with telescopic tripod pole. Location(s): [#LOC] | $1,794 |
| 5450-0033 | Quartz light Fire Research Optimum 150W/12V model OPA530-HD15-SR-SW with side mount external pole. Includes switch accessible to driver. Location(s): [#LOC]. | $2,128 |
| 5450-0034 | Quartz light MagnaFire 900W/240V model KR-739-HD with portable base. Requires 220V receptacle. Location(s): [#LOC] | $659 |
| 5450-0035 | Quartz light MagnaFire 900W/240V model KR-1939 with recess mount. Location(s): [#LOC]. | $909 |
| 5450-0036 | Quartz light MagnaFire 900W/240V model KR-SB-639 without pole. Location(s): [#LOC]. | $1,054 |
| 5450-0037 | Quartz light MagnaFire 900W/240V model KR-939-I with internal pole. Location(s): [#LOC]. | $1,002 |
| 5450-0038 | Quartz light MagnaFire 900W/240V model KR-SB-539-W/2-I with external pole. Location(s): [#LOC]. | $1,311 |
| 5450-0039 | Quartz light MagnaFire 900W/240V model KR-SB-839-TM-I with external mount tripod telepole. Requires 220 volt receptacle. Location(s): [#LOC]. | $1,427 |
| 5450-0040 | Quartz light MagnaFire 900W/240V model KR-1339 with low profile mount. Location(s): [#LOC] | $1,042 |
| 5450-0041 | Quartz light MagnaFire 900W/240V model KR-1539 with cab brow mount (EA). Not available in front center due to DOT lights. Location(s): [#LOC]. | $924 |
| 5450-0045 | Quartz light MagnaFire 750W/120V model KR-736-HD with portable base. Requires 110V receptacle. Location(s): [#LOC] | $608 |
| 5450-0046 | Quartz light MagnaFire 750W/120V model KR-1936 with recess mount. Location(s): [#LOC]. | $944 |
| 5450-0047 | Quartz light MagnaFire 750W/120V model KR-SB-636 without pole. Location(s): [#LOC]. | $1,092 |
| 5450-0048 | Quartz light MagnaFire 750W/120V model KR-936-I with internal pole. Location(s): [#LOC]. | $1,082 |
| 5450-0049 | Quartz light MagnaFire 750W/120V model KR-SB-536-W/2-I with external pole. Location(s): [#LOC]. | $1,375 |
| 5450-0050 | Quartz light MagnaFire 750W/120V model KR-SB-836-TM-I with external mount tripod telepole. Requires 110V receptacle. Location(s): [#LOC]. | $1,584 |
| 5450-0051 | Quartz light MagnaFire 750W/120V model KR-1336 with low profile mount. Location(s): [#LOC] | $972 |
| 5450-0052 | Quartz light MagnaFire 750W/120V model KR-1536 with cab brow mount (EA). Location(s): [#LOC]. | $858 |
| 5450-0056 | Quartz light KwikRaze 1500W/220V model KR-SB-815-TM-I with external mount tripod telepole. Requires 220V receptacle. Location(s): [#LOC] | $1,703 |

| Item No. | Description | |
|---|---|---|
| 5450-0058 | Quartz light Fire Research Optimum 1500W/240V model OPA510E-M15-SW with internal pull-up pole. Location(s): [#LOC]. | $1,719 |
| 5450-0059 | Quartz light Fire Research Optimum 750W/110V portable model OPA700-S75-OP703. Location(s): [#LOC]. | $860 |
| 5450-0060 | Quartz light Fire Research Focus 750W/120V model FCA300U-S75 with brow mount. Location: Center of cab brow. | $945 |
| 5450-0063 | Quartz light Fire Research Optimum 900W/240V model OPA530-R90-SR-SW with bottom raise pole. Location(s): [#LOC]. | $1,697 |
| 5450-0064 | Quartz light Fire Research Focus 500W/120V model FCA200-S50 with recess mount. Location(s): [#LOC]. | $962 |
| 5450-0065 | Quartz light Fire Research Optimum 1000W/240V model OPA656-M12-ON-OP603 with telescopic tripod pole. Location(s): [#LOC] | $1,794 |
| 5450-0066 | Quartz light Fire Research Optimum 1500W/240V model OPA512-M15-SW with internal thru roof push up pole. Location(s): [#LOC] | $1,792 |
| 5450-0067 | Quartz light Fire Research Focus 500W/110V model FCA802-S50-01 with brow mount (EA). Light head and mount to be powder coated black. Location(s): [#LOC] | $920 |
| 5450-0068 | Quartz light MagnaFire 750W/120V model KR-SB-436-I-XL with through ceiling push up pole (PR). Outer pole to be 12" inner pole to be 48". Both lights to be on one breaker. Includes support tubes on interior of cab and switch each side on rear cab wall to control lights. Location: One each side rear corner of cab roof. | $3,244 |
| 5450-0069 | Quartz light MagnaFire 5000 500W/120V model KR-2555 with cab brow mount (EA). Location(s): [#LOC]. Not available in front center due to DOT lights. | $759 |
| 5450-0070 | Quartz light MagnaFire 5000 500W/120V model KR-SB-555-W/2-I with external pole. Location(s): [#LOC]. | $1,191 |
| 5450-0071 | Quartz light Fire Research Optimum 750W/110V model OPA200-S75 with recess mount. Location(s): [#LOC]. | $1,027 |
| 5450-0073 | Quartz light Fire Research Focus 750W/120V model FCA300U-S75 with brow mount. Light head and mount to be powder coated black. Location: Center of cab brow. | $994 |
| 5450-0074 | Quartz light timer (ea). | $144 |
| 5450-0075 | Quartz light Fire Research Optimum 900W/240V model OPA510E-R90-SW with top raise pole. Location(s): [#LOC]. | $1,697 |
| 5450-0076 | Quartz light MagnaFire 5000 750W/120V model KR-3556 with front cab brow mount (EA). Quest cabs only. Location(s): [#LOC]. | $858 |
| 5450-0078 | Quartz light Fire Research Focus 750W/110V model FCA802-S75-01 with brow mount (EA). Light head and mount to be powder coated black. Location(s): [#LOC] | $994 |
| 5450-0079 | Quartz light MagnaFire 750W/120V model KR-1536 with cab brow mount (EA). Light head and mount to be powder coated black. Location(s): [#LOC]. | $908 |
| 5450-0081 | Quartz light Fire Research Optimum 750W/110V model OPA656-S75-ON-OP603 with 28" telescopic tripod pole. Location(s): [#LOC] | $1,688 |
| 5450-0083 | Quartz light Fire Research Focus 1500W/240V model FCA530-M15-SR-SW with side mount push up pole. Location(s): [#LOC]. | $1,657 |
| 5450-0084 | Quartz light Fire Research Focus 150W/12V model FCA510E-D15-SW with internal pole. Includes switch accessible to driver. Location(s): [#LOC]. | $1,187 |
| 5450-0089 | Quartz light MagnaFire 900W/240V model KR-SB-539-W/2-I with external pole. Light head to be powder coated black. Location(s): [#LOC]. | $1,360 |
| 5450-0091 | Quartz light Fire Research Optimum 900W/240V model OPA200-R90 with recess mount. Location(s): [#LOC]. Includes plate stand-off box to allow lights to recess without intruding into hosebed area. | $1,265 |
| 5450-0092 | Quartz light Fire Research Focus 750W/110V model FCA530-S75-SR-SW with side mount push-up pole. Light head and mounts to be powder coated black. Location(s): [#LOC]. | $1,700 |
| 5450-0094 | Quartz light Extenda-Lite 750W/110V model E-4750-EX-TL-UI-EX. Location(s): [#LOC]. | $899 |
| 5450-0095 | Quartz light Fire Research Focus 150W/12V model FCA300U-D15 with brow mount. Includes switch accessible to driver. Location: center of cab brow. | $1,090 |
| 5450-0096 | Quartz light Fire Research Optimum 1000W/110V portable model OPA700-M10-OP703. Location(s): [#LOC]. | $981 |
| 5450-0098 | Quartz light Fire Research Optimum 1500W/240V model OPA600-M15-ON-OP603 with telescopic tripod pole. Location(s): [#LOC] | $1,865 |
| 5450-0099 | Quartz light Fire Research Optimum 1500W/240V model OPA200-M15 with recess mount. Location(s):[#LOC]. | $1,047 |
| 5450-0102 | Quartz light Fire Research Focus 1000W/120V model FCA530-M10-SR-SW-ON with external push up pole. Location(s): [#LOC]. | $1,761 |
| 5450-0114 | Quartz light Fire Research Focus 1000W/120V model FCA200-M10 with recess mount. Location(s): [#LOC]. | $877 |
| 5450-0115 | Light Whelen 12 volt Pioneer Plus model PFP1 with brow mount (EA). Includes switch in cab (driver and officer side facing lights switched separately). Location(s): [#LOC]. | $1,624 |

| Item No. | Description | |
|---|---|---|
| 5450-0116 | Quartz light Fire Research Focus 500W/110V model FCA600-S50-ON-FC603 with 40" telescopic tripod pole. Location(s): [#LOC]. | $1,670 |
| 5450-0117 | Light Whelen Pioneer Plus model PFP2 12V with brow mount and PFLASH (EA). Includes switch in cab (driver and officer side facing lights switched separately). Location(s): [#LOC]. | $2,482 |
| 5450-0118 | Quartz light Fire Research Focus 1000W/240V model FCA802-M12-01 with brow mount (EA). Location(s): [#LOC]. | $1,002 |
| 5450-0121 | Quartz light Fire Research Focus 1500W/240V model FCA530-M15-SR-SW-ON with external push up pole. Location(s): [#LOC]. | $1,673 |
| 5450-0122 | Light Whelen Pioneer Plus model PFP2 12V with brow mount (EA). Includes switch in cab accessible to driver (driver and officer side facing lights switched separately). Location(s): [#LOC]. | $2,359 |
| 5450-0123 | Light Whelen Pioneer Plus LED model PFP2 12V with PBAPEDD pedestal mount. Includes switch in cab (side facing lights switched separately). Location(s): [#LOC]. | $2,334 |
| 5450-0124 | Light Whelen Pioneer model PFA2 with brow mount (EA). Includes switch in cab (driver and officer side facing lights switched separately). Location(s): [#LOC]. | $1,896 |
| 5450-0125 | Quartz light MagnaFire 5000 750W/120V model KR-2556 with cab brow mount (EA). Location(s): [#LOC]. | $858 |
| 5450-0126 | Quartz light Fire Research Focus 750W/110V model FCA642-S75-ON-FC6F3 with 16.625" telescopic tripod pole. Location(s): [#LOC]. | $1,670 |
| 5450-0127 | Quartz light Fire Research Focus 150W/12V model FCA802-H15-01 with brow mount (EA). Includes switch accessible to driver. Location(s): [#LOC] | $1,541 |
| 5450-0128 | FRC quartz light head and bracket to be powdered coated job color (EA). Requires paint spray out sent to FRC for color matching. | $192 |
| 5450-0130 | Quartz light MagnaFire 750W/120V model KR-2556 with cab brow mount (EA). Location(s): [#LOC]. Not available in front center due to DOT lights. | $858 |
| 5450-0134 | Light Whelen Pioneer Plus model PFP2 12V with brow mount powder coated black (EA). Includes switch in cab (driver and officer side facing lights switched separately). Location(s): [#LOC]. | $2,359 |
| 5450-0135 | Quartz light Fire Research Focus 150W/12V model FCA802-H15-01 with brow mount (EA). Light head and mount to be powder coated black. Includes switch accessible to driver. Location(s): [#LOC]. | $1,586 |
| 5450-0136 | Light Whelen Pioneer Plus model PCP2 flood/spot with brow mount (EA). Includes switch in cab (driver and officer side facing lights switched separately). Location(s): [#LOC]. | $2,379 |
| 5450-0138 | Light Whelen Pioneer Plus model PFP2AC with Quest brow mount (EA). Location(s): [#LOC]. | $2,310 |
| 5450-0139 | Light Whelen Pioneer Plus model PFP1AC 120V with recess mount. Location(s): [#LOC]. | $1,443 |
| 5450-0140 | Light Whelen Pioneer model PFA1 with pedistal mount. Includes switch in cab (driver and officer side facing lights switched separately). Location(s): [#LOC]. | $1,556 |
| 5450-0141 | Quartz light Fire Research Optimum 150W/12V model OPA230-H15 with recess mount. Includes switch in cab console. Location(s): [#LOC]. | $1,624 |
| 5450-0143 | Light Whelen 12V Pioneer model PFP2 with PBA203 recess mount. Includes switch accessible to driver (side facing lights switched separately). Location: [#LOC]. | $2,244 |
| 5450-0144 | Fire Research FRC Evolution 12V LED scene light model FCA530-V15-SW-H with external push-up pole. Includes switch in cab accessible to driver. Location: [#LOC]. | $2,391 |
| 5450-0145 | Light Whelen Pioneer Plus model PFP1 12V with recess mount. Includes switch accessible to driver (side facing lights switched separately). Location(s): [#LOC]. | $1,393 |
| 5450-0153 | Light Whelen Pioneer Plus model PFP1 with bail mount. Includes switch in cab accessible to driver (side facing lights switched seperately). Location(s): [#LOC]. | $1,393 |
| 5450-0154 | Fire Research Evolution 12V LED scene light model FCA510E-V15-SW with internal pull-up pole. Includes switch accessible to driver. Location: [#LOC]. | $2,391 |
| 5450-0155 | Fire Research Evolution 12V LED scene light model FCA802-V15 with brow mount (EA). Includes switch accessible to driver (driver and officer side facing lights switched separately). Location: [#LOC]. | $2,057 |
| 5450-0156 | Quartz light Fire Research Evolution 12V LED model FCA300U-V15 with brow mount. Includes switch accessible to driver. Location: center of cab brow. | $1,985 |
| 5450-0158 | Light Whelen Pioneer model PFP2AC 120V with external bottom raise pole mount (ROM model KR-SB-5PFP2AC-W/2-I). Location(s): driver and officer side back of cab. | $2,422 |
| 5450-0161 | Light Whelen 12V Pioneer model PCP2 with internal push-up pole mount (Havis KR-SB-4PCP2-S-I). Includes switch on light head. Location(s): [#LOC]. | $2,415 |
| 5450-0162 | Light Whelen Pioneer Plus model PFP2AC 120V with brow mount (EA). Location(s): [#LOC]. | $2,310 |
| 5450-0166 | Light Whelen Pioneer Plus model PFP2AC 120V with recess mount. Location(s): [#LOC]. | $2,678 |
| 5450-0167 | Light Whelen Pioneer Plus model PFP2 12V with Quest brow mount (EA). Includes switch in cab accessible to driver (driver and officer side facing lights switched separately). Location(s): [#LOC]. | $2,359 |
| 5450-0169 | Quartz light MagnaFire 750W/120V model KR-SB-836-TM-SL-I with external mount tripod telepole. Requires 110V receptacle. Location(s): [#LOC]. | $1,584 |
| 5450-0170 | Fire Research Evolution 12V LED model FCA210-V12 with recess mount. Includes switch in cab accessible to driver. Location(s): [#LOC]. | $1,897 |
| 5450-0171 | Light Whelen Pioneer model PFA1 with PBA103 recess mount. Includes switch accessible to driver. Location: [#LOC]. | $1,393 |

| Item No. | Description | |
|---|---|---|
| 5450-0172 | Light Whelen Pioneer Plus model PFP1 12V with vertical bail mount. Includes switch in cab accessible to driver (side facing lights switched seperately). Location(s): [#LOC]. | $1,393 |
| 5450-0174 | Light Whelen Pioneer Plus model PFP1AC 120V with recess mount. Location(s): [#LOC]. | $1,443 |
| 5450-0175 | Light Whelen Pioneer Plus model PFP2AC 120V with brow mount powder coated black (EA). Location(s): [#LOC]. | $2,310 |
| 5450-0176 | Light Whelen Pioneer Plus LED model PFP2 12V with pedestal mount powder coated black. Includes switch in cab (side facing lights switched separately). Location(s): [#LOC]. | $2,334 |
| 5450-0179 | Light Whelen Pioneer model PFA2 with brow mount powder coated FLNA3225E-1 (EA). Includes switch in cab (driver and officer side facing lights switched separately). Location(s): [#LOC]. | $1,959 |
| 5450-0181 | Light Fire Research Spectra 12V LED model SPA510E-Q20-SW with internal pull-up pole. Includes switch accessible to driver. Location(s): [#LOC]. | $2,861 |
| 5450-0183 | Fire Research Spectra 12V LED scene light model SPA530E-Q20-SW-H with external push-up pole. Includes switch in cab accessible to driver. Location: [#LOC]. | $2,859 |
| 5450-0184 | Light Whelen Pioneer model PFP2AC 120V powder coated FLNA3225E-1 with external bottom raise pole mount painted FLNA3225E-1 (ROM model KR-SB-5PFP2AC-W/2-I). Location(s): [#LOC]. | $2,527 |
| 5450-0185 | Light Whelen Pioneer model PFA1 with brow mount (EA). Includes switch in cab (driver and officer side facing lights switched separately). Location(s): [#LOC]. | $1,233 |
| 5450-0186 | Light Whelen Pioneer model PFA1 with vertical bail mount. Includes switch in cab (driver and officer side facing lights switched separately). Location(s): [#LOC]. | $1,147 |
| 5450-0188 | Quartz light MagnaFire 5000 500W/120V model KR-SB-555-W/2-I-SL with (special length) external pole. Location(s): [#LOC]. | $1,191 |
| 5450-0189 | Light Whelen Pioneer Plus model PFP1AC 120V with brow mount (EA). Location(s): [#LOC]. | $1,644 |
| 5450-0190 | Fire Research Spectra 12V LED model SPA260-Q15 with surface mount. Includes switch accessible to driver. Location: [#LOC]. | $1,926 |
| 5450-0191 | Light Fire Research Spectra 120V LED model SPA600-K20-ON-SPA603 with 40" telescopic tripod pole. Location(s): :[#LOC]. | $3,299 |
| 5450-0192 | Light Fire Research Spectra 120V LED model SPA830-K20 with universal brow mount (EA). Location: [#LOC]. | $2,498 |
| 5450-0193 | Light Fire Research Spectra LED 110V model SPA510-K20 with internal pull-up pole. Location(s): [#LOC]. | $2,554 |
| 5450-0194 | Light Whelen Pioneer model PCP2 with PBA203 recess mount. Includes switch in cab accessible to driver (driver and officer side facing lights switched separately). Location: [#LOC]. | $2,288 |
| 5450-0195 | Whelen Micro Pioneer Series Super LED Work/Scene Light Model MPR15W with 15 degree recess mount (EA). Includes switch accessible to driver (side facing lights switched seperately). Location: [#LOC]. | $756 |
| 5450-0196 | Brow light brackets (not housing) shall be painted FLNA 10219. This shall include forward rear and side facing if so equipped. | $180 |
| 5450-0197 | Light Whelen Pioneer model PFP2 12V powder coated FLNA3225E-1 red with internal top raise pole mount (ROM model KR-9PFP2-S). Includes switch on light head. Location: [#LOC]. | $2,203 |
| 5450-0198 | Light Whelen Pioneer Plus model PFP2 12V with brow mount powder coated FLNA3225E-1 red (EA). Includes switch in cab accessible to driver (driver and officer side facing lights switched separately). Location(s): [#LOC]. | $2,460 |
| 5450-0199 | Light Whelen Pioneer Plus model PFP1 12V with vertical bail mount powder coated FLNA3225E-1 red. Includes switch in cab accessible to driver (side facing lights switched seperately). Location(s): [#LOC]. | $1,495 |
| 5450-0200 | Fire Research Spectra 120V LED scene light model SPA530-K20-SW-H with external push-up pole. Location: [#LOC]. | $2,859 |
| 5450-0201 | Light Fire Research Spectra LED 12V model SPA570-Q20 without pole. Includes switch accessible to driver (driver and officer side facing lights switched seperately). Location(s): [#LOC]. | $2,644 |
| 5450-0202 | Fire Research Spectra 120V LED model SPA260-K15 with surface mount. Location: [#LOC]. | $2,328 |
| 5450-0204 | Light Whelen Micro Pioneer Plus model MPBW with bail mount. Includes switch in cab accessible to driver (side facing lights switched separately). Location: [#LOC]. | $761 |
| 5450-0207 | Light Whelen Pioneer Plus LED model PFP2 120V with pedestal mount powder coated black. Location(s): [#LOC]. | $2,509 |
| 5450-0208 | Fire Research Spectra 12V LED model SPA802-Q20-02 with brow mount (EA). Includes switch accessible to driver. Location: [#LOC]. | $2,498 |
| 5450-0209 | Fire Research Spectra 12V LED model SPA802-Q20-02 with brow mount powder coated black (EA). Includes switch accessible to driver. Location: [#LOC]. | $2,550 |
| 5450-0210 | Light Fire Research Spectra LED 240V model SPA570-J20 without pole. Location(s): [#LOC]. | $2,644 |
| 5450-0211 | Light Fire Research Spectra 240V LED model SPA512-J20-SW with internal thru roof push up pole. Includes switch accessible to driver. Location(s): [#LOC]. | $3,044 |
| 5450-0212 | Quartz light Fire Research Focus 1500W/240V model FCA570-M15 without pole. Location(s): [#LOC]. | $1,330 |

| Item No. | Description | |
|---|---|---|
| 5450-0214 | Light Whelen Pioneer Plus model PFP1 12V powder coated black with vertical bail mount. Includes switch in cab accessible to driver (side facing lights switched seperately). Location(s): driver and officer side rear of body up high. | $1,393 |
| 5450-0215 | Light Whelen 12V Pioneer model PFP2 powder coated black with PBA203 recess mount. Includes switch accessible to driver (side facing lights switched separately). Location: driver and officer side centrally located in center area recessed into roof top compartment raise. | $2,244 |
| 5450-0216 | Quartz light Fire Research Spectra 120V LED model SPA802-K20-02 with brow mount (EA). Location: [#LOC]. | $2,498 |
| 5450-0218 | Fire Research Evolution 12V LED model FCA210-V12 with recess mount powder coated black. Includes switch in cab accessible to driver. Location(s):[#LOC]. | $1,941 |
| 5450-0220 | Quartz light MagnaFire 750W/120V model KR-1936 with recess mount in diamond plate mounting box. Location(s): [#LOC]. | $1,119 |
| 5450-0221 | Quartz light MagnaFire 5000 750W/120V model KR-2556 with cab brow mount (EA). Light head to be powder coated black. Location(s): [#LOC]. | $939 |
| 5450-0222 | Quartz light MagnaFire 750W/120V model KR-1336 with low profile mount. Light head to be powder coated black. Location(s): [#LOC] | $1,063 |
| 5450-0223 | Quartz light MagnaFire 750W/120V model KR-SB-536-W/2-I with external pole. Light head to be powder coated black. Location(s): [#LOC]. | $1,428 |
| 5450-0224 | Quartz light Fire Research Focus 1000W/120V model FCA600-M10-ON-6F3 with telescopic tripod pole. Location(s): [#LOC]. | $1,807 |
| 5450-0226 | Light Whelen Pioneer Plus model PFP1AC 120V with vertical bail mount. Location(s): [#LOC]. | $1,582 |
| 5450-0227 | Light Whelen Pioneer Plus LED model PFP1 12V with PBAPEDD pedestal mount. Includes switch in cab (side facing lights switched separately). Location(s): [#LOC]. | $1,663 |
| 5450-0230 | Floodlight Whelen/ROM model KR-SB-8PFP2AC-I-TM with external mount tripod telepole. Pole length required shall be determined upon mounted location. Requires 110V receptacle. Location(s): [#LOC]. | $2,904 |
| 5450-0231 | Light Whelen Pioneer Plus LED model PFP2 12V with PBAPEDD pedestal mount powder coated black housing mounting brackets applicable shall also be black. Includes switch in cab (side facing lights switched separately). Location(s): [#LOC]. | $2,382 |
| 5450-0232 | Light Whelen Pioneer Plus model PCP2AFSB 120VAC flood/spot with brow mount powder coated black (EA). Location(s): [#LOC]. | $2,379 |
| 5450-0233 | Light Whelen Pioneer Plus model PCP2ASFB 120VAC spot/flood with brow mount powder coated black (EA). Location(s): [#LOC]. | $2,379 |
| 5450-0234 | Light Whelen Pioneer Plus model PCP2AFSB 120VAC flood/spot with pedestal mount powder coated black. Location(s): [#LOC]. | $2,375 |
| 5450-0235 | Light Whelen Pioneer Plus model PCP2ASFB 120VAC spot/flood with pedestal mount powder coated black. Location(s): [#LOC]. | $2,375 |
| 5450-0237 | Light Whelen Pioneer Plus 12V model PCP2 flood/spot with pedestal mount. Includes switch in cab (driver and officer side facing lights switched separately). Location(s): [#LOC]. | $2,375 |
| 5450-0239 | Light Whelen Pioneer Plus model PCP2 flood/spot with pedestal mount (EA). Includes switch in cab (driver and officer side facing lights switched separately). Location(s): [#LOC]. | $2,375 |
| 5450-0240 | Light Whelen Pioneer Plus model PFP2 12V with Quest brow mount (EA) powder coated black. Includes switch in cab accessible to driver (driver and officer side facing lights switched separately). Location(s): [#LOC]. | $2,359 |
| 5450-0242 | Fire Research Spectra 12V LED model SPA260-Q15 powder coated black with surface mount. Includes switch accessible to driver. Location: [#LOC]. | $1,980 |
| 5450-0243 | Quartz light Fire Research Spectra 120V LED model SPA260-K15 powder coated black with surface mount. Location: [#LOC]. | $2,381 |
| 5450-0244 | Light Whelen Pioneer Plus LED model PCP3 12V combination flood and 8 degree spotlight with pedestal mount adapter. Includes switch in cab (side facing lights switched separately). Location(s): [#LOC]. | $2,657 |
| 5450-0245 | Light Whelen Pioneer Plus model PFP2AC 120V with brow mount (EA). Location(s): [#LOC]. | $2,310 |
| 5450-0246 | Light Whelen Micro Pioneer Plus model MPBB with bail mount powder coated black. Includes switch in cab accessible to driver (side facing lights switched separately). Location: [#LOC]. | $761 |
| 5450-0247 | Quartz light MagnaFire 750W/120V model KR-1936 with recess mount powder coated black. Location(s): [#LOC]. | $986 |
| 5450-0248 | Quartz light Fire Research Optimum 1000W/240V model OPA510E-M12-SW with internal pull up pole. Location(s): [#LOC]. | $1,719 |
| 5450-0252 | Light Whelen Pioneer model PFA2 with PBA203 recess mount. Includes switch in cab (driver and officer side facing lights switched separately). Location: [#LOC]. | $2,020 |
| 5450-0255 | Light Fire Research Evolution LED 12V model FCA580-V15 side fixed mount. Includes switch accessible to driver. Location(s): [#LOC]. | $1,948 |
| 5450-0256 | Floodlight Whelen PFP1AC 120v with external mount tripod telepole. Requires 110V receptacle. Location(s): [#LOC]. | $2,643 |
| 5450-0257 | Light Whelen Pioneer model PFP2 12V with external bottom raise pole mount. Includes switch accessible to driver. Location(s): [#LOC]. | $2,602 |

| Item No. | Description | |
|---|---|---|
| 5450-0258 | Light Whelen Pioneer Plus model PFP2 12V with internal top raise pole mount. Includes switch accessible to driver. Location: [#LOC]. | $2,353 |
| 5450-0259 | Floodlight Whelen PFP2AC 110V with external mount 50" tripod telepole. Requires 110V receptacle. Location(s): [#LOC]. | $3,273 |
| 5450-0260 | Light Whelen Pioneer model PCP2AP 120V with external bottom raise pole mount. Location(s): [#LOC]. | $2,945 |
| 5450-0261 | Light Whelen Pioneer model PFP2AC 120V with external bottom raise pole mount. Location(s): [#LOC]. | $2,708 |
| 5450-0262 | Light Whelen Pioneer model PFP2 12V with external bottom raise pole mount. Includes switch accessible to driver. Location(s): [#LOC]. | $2,617 |
| 5450-0263 | Light Whelen Pioneer Plus model PCP2 12V flood/spot with brow mount powder coated black. Includes switch in cab (driver and officer side facing lights switched separately). Location(s): [#LOC]. | $2,379 |
| 5450-0264 | Light Whelen Pioneer Plus LED model PFP2 120V with pedestal mount. Location(s): [#LOC]. | $2,509 |
| 5450-0265 | Light Whelen Pioneer model PFP2AC 120V with internal top raise pole mount. Location: [#LOC]. | $2,645 |
| 5450-0266 | Light Whelen Pioneer Plus model PFP2 12V with recess mount. Includes switch accessible to driver (driver and officer switched seperately) and diamond plate mounting boxes for recess mount. Location: [#LOC]. | $2,528 |
| 5450-0267 | Light Whelen 150W/120V with portable base. Requires 110V receptacle. Location(s): [#LOC]. | $2,442 |
| 5450-0268 | Light Fire Research Spectra LED 120V model SPA570-K20 without pole powder coated black. Location(s): [#LOC]. | $2,696 |
| 5450-0269 | Light Fire Research Spectra LED 110V model SPA510-K20 with internal pull-up pole powder coated black. Location(s): [#LOC]. | $2,606 |
| 5450-0270 | Fire Research Evolution 12V LED scene light model FCA510E-V15-SW with internal pull-up pole powder coated black. Includes switch accessible to driver. Location: [#LOC]. | $2,445 |
| 5450-0271 | Akron SceneStar 120V LED model ELSS-XLAC-SM2-PS-UI-TL. Location: [#LOC]. | $2,334 |
| 5450-0272 | Light Whelen Pioneer model PFP2AC 120V powder coated black with internal bottom raise pole mount. Location: [#LOC]. | $2,645 |
| 5450-0273 | Quartz light Fire Research Optimum 1500W/240V model OPA642-M15-ON-603 with 16.625" telescopic tripod pole. Location(s): [#LOC]. | $1,754 |
| 5450-0274 | Fire Research Spectra 12V LED scene light model SPA530E-Q20-SW-H with external push-up pole powder coated black. Includes switch in cab accessible to driver. Location: [#LOC]. | $2,912 |
| 5450-0276 | Akron SceneStar 12V LED model ELSS-XLDC-PU-UI-TL. Location:[#LOC]. | $2,037 |
| 5450-0277 | Light Whelen Pioneer model PFP2 12V powder coated black with external bottom raise pole mount. Includes switch accessible to driver. Location(s) [#LOC]. | $2,602 |
| 5450-0278 | Light Whelen Pioneer Plus model PFP2 12V with recess mount. Location(s): [#LOC]. | $2,678 |
| 5450-0279 | Floodlight Whelen PFP2AC 110V powder coated black with external mount 40" tripod telepole. Requires 110V receptacle. Location(s): [#LOC]. | $3,273 |
| 5450-0280 | Light Whelen Pioneer model PFP1AC 120V with internal top raise pole mount. Location: [#LOC]. | $1,889 |
| 5450-0281 | Quartz light Fire Research Focus 1000W/240V model FCA300U-M12 with roof mount. Location(s): [#LOC]. | $1,002 |
| 5450-0282 | Light Whelen Pioneer model PCP2 12V powder coated black with external bottom raise pole mount. Includes switch accessible to driver. Location(s) [#LOC]. | $2,602 |
| 5450-0283 | Light Whelen Pioneer Plus model PFP2 12V powder coated black with internal top raise pole mount. Includes switch accessible to driver. Location: [#LOC]. | $2,353 |
| 5450-0284 | Light Whelen 150W/120V with portable base powder coated black. Requires 110V receptacle. Location(s): [#LOC]. | $2,442 |
| 5450-0285 | Floodlight Whelen PFP2AC 110V with external mount custom length tripod telepole. Requires 110V receptacle. Location(s): [#LOC]. | $3,273 |
| 5450-0286 | Light Whelen Pioneer model PCP2 12V with external bottom raise pole mount. Includes switch accessible to driver. Location(s) [#LOC]. | $2,602 |
| 5450-0287 | Light Whelen 12 volt Pioneer Plus model PFP1 with brow mount (EA) powder coated black. Includes switch in cab (driver and officer side facing lights switched separately). Location(s): [#LOC]. | $1,624 |
| 5450-0288 | Light Whelen Pioneer Plus model PFP1 powder coated black with bail mount. Includes switch in cab accessible to driver (side facing lights switched seperately). Location(s): [#LOC]. | $1,393 |
| 5450-0289 | Light Whelen Pioneer model PFP1 12V with external bottom raise custom length pole. Includes switch accessible to driver. Location(s): [#LOC]. | $1,810 |
| 5450-0290 | Light Whelen Pioneer model PFP1 12V with internal top raise pole mount. Includes switch accessible to driver. Location: [#LOC]. | $1,746 |
| 5450-0292 | Light FireTech model FT-SL-15-110-W 120V with internal top raise pole mount (ROM model KR-900-I) pre-assembled from vendor. Location: [#LOC]. | $2,537 |
| 5450-0293 | FireTech 72" 12V brow light with integrated marker lights. Includes switch accessible to driver. Replaces front brow marker lights. Requires special bracket 5450-0340 on aerials with waterway trough. Not available on aerials with deep trough. | $3,984 |
| 5450-0294 | Light Whelen Pioneer Max model PCP3 12V with Whelen external bottom raise pole mount. Includes switch accessible to driver. Location(s): [#LOC]. | $2,966 |

| Item No. | Description | |
|---|---|---|
| 5450-0295 | LED scene light ExtendaLite 220W/12V model ELSS-XLDC-PS-SM2-UI-SW with telescopic external push-up pole. Includes switch accessible to driver in cab. Location(s): [#LOC]. | $2,294 |
| 5450-0296 | Fire Research Evolution 12V LED scene light model FCA570-V15 without pole. Includes switch in cab accessible to driver. Location: [#LOC]. | $2,025 |
| 5450-0297 | Light Fire Research Spectra LED 110V model SPA700-K20 with portable mount. Requires 110V receptacle. Location(s): [#LOC]. | $2,417 |
| 5450-0298 | Light Whelen Pioneer Plus model PFP1 12V with recess mount with painted stainless steel box. Includes switch accessible to driver (side facing lights switched separately). Location(s): [#LOC]. | $1,603 |
| 5450-0299 | Light Whelen Pioneer Plus model PFP1AC 120V with brow mount (EA) powder coated black. Location(s): [#LOC]. | $1,644 |
| 5450-0300 | Light Whelen Pioneer Plus model PFP2AC 120V with recess mount. Locate [#LOC]. Includes diamond plate mounting box for recess mount. | $2,850 |
| 5450-0301 | Light Fire Research Spectra 120V LED model SPA656-K20-ON-SPA603 with 28" telescopic tripod pole. Location(s): [#LOC]. | $3,299 |
| 5450-0302 | Light Fire Research Spectra 120V LED model SPA642-K20-ON-SPA603 with 16" telescopic tripod pole. Location(s): [#LOC]. | $3,299 |
| 5450-0304 | Light Whelen Pioneer Plus model PFP2 12V with bail mount. Includes switch in cab accessible to driver (side facing lights switched seperately). Location(s): [#LOC]. | $2,082 |
| 5450-0305 | Akron SceneStar 12V LED model ELSS-SLDC-PU-UI-TL. Location: [#LOC]. | $1,963 |
| 5450-0306 | Light Whelen Pioneer Plus model PCP2AFSP 120VAC flood/spot with pedestal mount. Location(s): [#LOC]. | $2,633 |
| 5450-0307 | Light Whelen Pioneer Plus 12V model PCP2 flood/spot with pedestal mount powder coated black. Includes switch in cab (driver and officer side facing lights switched separately). Location(s): [#LOC]. | $2,375 |
| 5450-0308 | Light Whelen Slimline Pioneer Plus model PSL2 12V with Freightliner center brow mount. Includes switch in cab accessible to driver. | $1,532 |
| 5450-0309 | Light Whelen Pioneer Plus 12V model PFP2 flood with pedestal mount. Includes switch in cab (driver and officer side facing lights switched separately). Location(s): [#LOC]. | $2,314 |
| 5450-0310 | Fire Research Spectra 120V LED model SPA260-K15 with surface mount and diamond plate mounting box. Location: [#LOC]. | $2,496 |
| 5450-0311 | Light Whelen Pioneer Plus model PCP2 flood/spot with Quest brow mount (EA). Includes switch in cab (driver and officer side facing lights switched separately). Location(s): [#LOC]. | $2,379 |
| 5450-0312 | Quartz light Fire Research Optimum 1000W/240V model OPA530-M12-SR-SW-ON with external push up pole. Location(s): [#LOC]. | $1,559 |
| 5450-0313 | FireTech 11" 12V double stack brow light powder coated white. Includes switch in cab (driver and officer side facing lights switched separately). Location: [#LOC] | $1,332 |
| 5450-0314 | FireTech 11" 12V double stack bracket mounted light. Includes switch in cab (driver and officer side facing lights switched separately). Location: [#LOC] | $1,332 |
| 5450-0315 | Quartz light Fire Research Optimum 750W/110V model OPA642-S75-ON-603 with 16.625" telescopic tripod pole. Location(s): [#LOC]. | $1,688 |
| 5450-0316 | Light Whelen Pioneer model PFP1 12V with PBA103 recess mount in painted smooth plate boxes. Includes switch accessible to driver (driver and officer side facing lights switched separately). Location: [#LOC]. | $1,620 |
| 5450-0317 | Quartz light Fire Research Focus 1000W/120V model FCA530-M10-CL50-SR-SW-ON with external push up pole. Location(s): [#LOC]. | $1,761 |
| 5450-0318 | Fire Research Spectra Max 12V LED model SPA260-Q20 with surface mount. Includes switch accessible to driver. Location: [#LOC]. | $2,140 |
| 5450-0319 | Akron SceneStar 12V LED model ELSS-XLDC-SM2-PS-UI-TL. Includes switch accessible to driver. Location: [#LOC]. | $2,334 |
| 5450-0320 | Light Whelen Pioneer Plus model PFP1 12V powder coated black with recess mount. Includes switch accessible to driver (side facing lights switched separately). Location(s): [#LOC]. | $1,393 |
| 5450-0321 | FireTech 72" 12V brow light with integrated marker lights and black housing. Includes switch accessible to driver. Replaces front brow marker lights. Requires special bracket 5450-0340 on aerials with waterway trough. Not available on aerials with deep trough. | $3,984 |
| 5450-0322 | Light Fire Research Spectra Max 120V LED model SPA642-K28-ON-SPA603 with 16" telescopic tripod pole. Location(s): [#LOC]. | $3,299 |
| 5450-0323 | Light Whelen Pioneer Plus model PFP2AC 120V powder coated black with recess mount. Location(s): [#LOC]. | $2,678 |
| 5450-0324 | Light Whelen Pioneer model PCP2 powder coated black with PBA203 recess mount in fabricated diamond plate boxes. Includes switch in cab (driver and officer side facing lights switched separately). Location: [#LOC]. | $2,467 |
| 5450-0325 | Light Whelen Pioneer model PCP2 with chrome surface mount. Includes switch in cab accessible to driver (driver and officer side facing lights switched separately). Location: [#LOC]. | $2,028 |
| 5450-0326 | Fire Research Spectra 12V LED model SPA260-Q15 with surface mount and diamond plate mounting box. Location: [#LOC]. | $2,105 |

| Item No. | Description | |
|---|---|---|
| 5450-0327 | Light Whelen Pioneer model PFP2AC 120V with internal bottom raise pole mount. Location: [#LOC]. | $2,645 |
| 5450-0328 | Federal Signal Commander 12V LED scene light model COMLC15K-510E-SW with internal pull-up pole. Includes switch accessible to driver. Location: [#LOC]. | $2,391 |
| 5450-0329 | Fire Research Spectra 120V LED model SPA260-K15 with surface mount and smooth plate painted mounting box. Location: [#LOC]. | $2,604 |
| 5450-0330 | Diamond plate mounting boxes (4). For use with scene lights and warning lights. Locate on driver side forward and rearward compartment tops outboard; boxes to be full depth of compartment top. Officer side forward and rearward upper body corners. | $894 |
| 5450-0331 | Quartz light Fire Research Focus 500W/110V model FCA802-S50-01 with brow mount (EA). Location(s): [#LOC]. | $920 |
| 5450-0332 | Light Whelen Pioneer model PFP2AC 120V powder coated black with external bottom raise pole mount. Location(s): [#LOC]. | $2,708 |
| 5450-0333 | Quartz light KwikRaze 1500W/220V model KR-93D-I-NCW with internal telepole. Location(s): [#LOC]. | $960 |
| 5450-0334 | Akron SceneStar 120V LED model ELSS-XLAC-RM recess mount. Location: [#LOC]. | $1,962 |
| 5450-0335 | LED light Akron SceneStar 220W/12V model ELSS-XLDC-BL. Includeds switch accessible to driver. Location(s): [#LOC]. | $2,140 |
| 5450-0336 | Quartz light Fire Research Focus 500W/120V model FCA300U-S50 with brow mount. Location: Center of cab brow. | $945 |
| 5450-0337 | FireTech 35" 12V mini brow light with white housing. Includes switch in cab (driver and officer side facing lights switched separately). Location: [#LOC] | $1,983 |
| 5450-0338 | FireTech 21" recessed mini brow light. Includes 115v to 24v power supply (mounted seperately from light). Location: [#LOC] | $2,350 |
| 5450-0339 | FireTech 46" 12V brow light with black housing. Includes switch accessible to driver (driver and officer side facing lights switched separately). Location: [#LOC] | $2,337 |
| 5450-0340 | Extended brow light brackets for use with FireTech front brow light with standard cab trough. | $257 |
| 5450-0341 | FireTech 72" 12V scene light with black housing. Includes switch accessible to driver. Side facing lights switched seperately. Location: [#LOC]. | $3,800 |
| 5450-0342 | Light shield for FireTech 72" scene light (EA). Smooth aluminum painted Durabak black. Location: [#LOC]. | $335 |
| 5450-0343 | Light Whelen 12V Pioneer model PFP2 powder coated black with PBA203 recess mount. Includes switch accessible to driver (side facing lights switched separately). Location: [#LOC]. | $2,244 |
| 5450-0344 | Light Whelen Slimline Pioneer Plus model PSL2 12V with recess mount. Includes switch in cab accessible to driver (side facing lights switched seperately). Location: [#LOC]. | $1,315 |
| 5450-0345 | Quartz light Fire Research Optimum 750W/110V model OPA200-S75 with recess mount with diamond plate box. Location(s): [#LOC]. | $1,195 |
| 5450-0346 | FireTech 72" 12V brow lights with integrated marker lights for Quest. Includes (3) 24" brow lights with switch accessible to driver. Replaces front brow marker lights. Not available on aerials with deep trough. | $3,984 |
| 5450-0347 | Quartz light Fire Research Optimum 750W/110V portable model OPA700-S75-OP703 powder coated black. Location(s): [#LOC]. | $935 |
| 5450-0348 | Light Whelen Slimline Pioneer Plus model PSL2 12V with pedestal mount. Includes switch in cab accessible to driver (side facing lights switched seperately). Location: [#LOC]. | $1,379 |
| 5450-0349 | Floodlight Whelen PFP2AC 110V powder coated black with external mount 50" tripod telepole. Requires 110V receptacle. Location(s): [#LOC]. | $3,273 |
| 5450-0350 | Light Whelen Pioneer model PFP1AC 120V with external bottom raise pole mount. Location(s): [#LOC]. | $2,257 |
| 5450-0351 | Light Whelen Pioneer model PCP2 with PBA203 recess mount in smooth plate mounting boxes painted job (2-tone if applicable) color. Includes switch in cab (driver and officer side facing lights switched separately). Location: [#LOC]. | $2,508 |
| 5450-0353 | Light Fire Research Spectra 12V LED model SPA850-Q20 with flat mount. Location: [#LOC]. | $2,436 |
| 5450-0354 | Fire Research Spectra 120V LED model SPA260-K20 with surface mount. Location: [#LOC]. | $2,524 |
| 5450-0355 | Fire Research Spectra 120V LED scene light model SPA540-K20-CL-SW-H powder coated black with external pull-up pole. Location: [#LOC]. | $2,906 |
| 5450-0356 | Quartz light Fire Research Evolution 12V LED model FCA300U-V15 with brow mount powder coated black. Includes switch accessible to driver. Location: center of cab brow. | $2,028 |
| 5450-0357 | Light FireTech model FT-SL-15-W 12V with internal top raise pole mount (ROM model KR-900-I) pre-assembled from vendor. Includes switch in cab accessible to driver (side facing lights switched seperately). Location: [#LOC]. | $2,410 |
| 5450-0359 | Federal Signal Commander 12V LED scene light model COMM15K-530-SW-H with external push-up pole. Includes switch in cab accessible to driver. Location: [#LOC]. | $2,391 |
| 5450-0360 | Federal Signal Commander 12V LED scene light model COM15K-802 with brow mount (EA). Includes switch accessible to driver (driver and officer side facing lights switched separately). Location: [#LOC]. | $2,057 |

| Item No. | Description | |
|---|---|---|
| 5450-0361 | FireTech 11" 12V double stack brow light powder coated black. Includes switch in cab (driver and officer side facing lights switched separately). Location: [#LOC] | $1,332 |
| 5450-0362 | FireTech 21" 12V recessed mini brow light model FT-MB-2.18-W. Location: [#LOC]. | $1,980 |
| 5450-0363 | Light Whelen Pioneer model PCP1SM1C with chrome surface mount. Includes switch in cab accessible to driver (driver and officer side facing lights switched separately). Location: [#LOC]. | $1,197 |
| 5450-0364 | Light Whelen Pioneer Plus model PFP2 12V with recess mount. Includes switch accessible to driver (driver and officer switched seperately) and aluminum smooth plate painted job color mounting boxes for recess mount. Location: [#LOC]. | $2,732 |
| 5450-0365 | FireTech 42" 12V mini brow light. Includes switch in cab (driver and officer side facing lights switched separately). Location: [#LOC]. | $2,163 |
| 5450-0366 | Fire Research Spectra Max 12V LED model SPA802-Q28-02 with brow mount (EA). Includes switch accessible to driver. Location: [#LOC]. | $2,724 |
| 5450-0367 | FireTech 35" 12V mini brow light with black housing. Includes switch in cab (driver and officer side facing lights switched separately). Location [#LOC]. | $1,983 |
| 5450-0368 | No exposed wire connection for FireTech 72" 12V brow light with integrated marker lights. Locate: Front of cab roof. | $248 |
| 5450-0369 | No exposed wire connection for FireTech 12V mini brow light. Locate: Roll up door header B1. | $248 |
| 5450-0370 | Light Whelen Pioneer Plus model PFP2 12V with vertical bail mount. Includes switch in cab accessible to driver (side facing lights switched seperately). Location(s): [#LOC]. | $1,983 |
| 5450-0371 | Light Fire Research Spectra MS 12V LED model SPA510E-R14-SW with internal pull-up pole. Includes switch accessible to driver. Location(s): [#LOC]. | $1,960 |
| 5450-0372 | Fire Research Mini-Spectra 12V LED scene light model SPA530-R14-CL-SW-H with external push-up pole. Location: [#LOC]. | $2,166 |
| 5450-0373 | FireTech 46" 12V brow light with white housing. Includes switch accessible to driver (driver and officer side facing lights switched separately). Location: [#LOC]. | $2,337 |
| 5450-0374 | FireTech 42" 12V mini brow light with black housing. Includes switch in cab (driver and officer side facing lights switched separately). Location: [#LOC]. | $2,163 |
| 5450-0375 | Light Fire Research Spectra Max LED 12V model SPA570-Q28 without pole. Includes switch accessible to driver (driver and officer side facing lights switched seperately). Location(s): [#LOC]. | $2,752 |
| 5450-0376 | Light Fire Research Spectra MS 120V LED model SPA600-T14-ON-SPA603 with 40" telescopic tripod pole. Location(s): [#LOC]. | $2,278 |
| 5450-0377 | Light Whelen Slimline Pioneer Plus model PSL2 12V with Freightliner driver/officer brow mounts (PR). Includes switch in cab accessible to driver. | $2,747 |
| 5450-0378 | Light Whelen Pioneer model PCP2SM2C with smooth plate mounting box painted job color (two-tone job color if applicable). Includes switch in cab accessible to driver (driver and officer side facing lights switched separately). Location: [#LOC]. | $2,216 |
| 5450-0379 | Light Whelen Pioneer model PCP2SM2C with diamond plate mounting box. Includes switch in cab accessible to driver (driver and officer side facing lights switched separately). Location: [#LOC]. | $2,111 |
| 5450-0380 | Light Whelen Pioneer model PCPSM1B with black surface mount. Includes switch in cab accessible to driver (driver and officer side facing lights switched separately). Location: [#LOC]. | $1,197 |
| 5450-0381 | FireTech 15" 12V mini double stacked trunnion mount light. Includes switch in cab (driver and officer side facing lights switched separately). Location:[#LOC]. | $1,347 |
| 5450-0382 | FireTech 72" 12V brow light powder coated job color (two-tone color if applicable) with integrated marker lights. Includes switch accessible to driver. Replaces front brow marker lights. Not available on aerials with deep trough. | $4,485 |
| 5450-0383 | Light Whelen Pioneer model PFP2AC 120V powder coated black with external bottom raise pole mount. Location(s): [#LOC]. | $2,708 |
| 5450-0384 | Light Whelen Pioneer Plus model PFP2AC 120V powder coated FLNA3225E-1 red with brow mount (EA). Location(s): [#LOC]. | $2,384 |
| 5450-0385 | Light Whelen Pioneer model PCP2 powder coated black with PBA203 recess mount. Includes switch in cab accessible to driver (driver and officer side facing lights switched separately). Location: [#LOC]. | $2,288 |
| 5450-0386 | Quartz light Fire Research Focus 1000W/240V model FCA510E-M12-SW with internal pull up pole. Location(s): [#LOC]. | $1,619 |
| 5450-0387 | FireTech 21" 12V double stack brow light powder coated black with combo spot/flood optics. Includes switch in cab (driver and officer side facing lights switched separately). Location: [#LOC] | $1,936 |
| 5450-0388 | Fire Research Mini-Spectra 120V LED scene light model SPA530-T14-SW-H with external push-up pole. Location: [#LOC]. | $2,065 |
| 5450-0389 | FireTech 31" 12V mini brow light with black housing. Includes switch in cab (driver and officer side facing lights switched separately). Location [#LOC]. | $1,848 |
| 5450-0390 | FireTech 20" 12V mini brow light. Includes switch in cab (driver and officer side facing lights switched separately). Location: [#LOC] | $1,164 |
| 5450-0391 | Light Whelen Pioneer model PCP2SM2B with black surface mount. Includes switch in cab accessible to driver (driver and officer side facing lights switched separately). Location: [#LOC]. | $2,028 |

| Item No. | Description | |
|---|---|---|
| 5450-0392 | Light Whelen Pioneer model PCP2SM2B with black housing and diamond plate mounting box. Includes switch in cab accessible to driver (driver and officer side facing lights switched separately). Location: [#LOC]. | $2,111 |
| 5450-0393 | Light Whelen Pioneer model PCP2SM2B with black housing and painted smooth plate mounting box. Includes switch in cab accessible to driver (driver and officer side facing lights switched separately). Location: [#LOC]. | $2,164 |
| 5450-0394 | Fire Research Spectra Max 12V LED model SPA802-Q28-02 with brow mount (EA) powder coated black. Includes switch accessible to driver. Location: [#LOC]. | $2,775 |
| 5450-0395 | FireTech 35" 12V mini brow light with black housing. Includes switch in cab (driver and officer side facing lights switched separately). Location: [#LOC] | $1,983 |
| 5450-0397 | Light Whelen Pioneer Plus model PFP2 12V with recess mount. Includes switch accessible to driver (driver and officer switched separately) with aluminum smooth plate mounting boxes painted job color for recess mount. Location: [#LOC]. | $2,732 |
| 5450-0398 | Light Whelen Pioneer Plus LED model PFP1 120V with pedestal mount. Location(s): [#LOC]. | $1,958 |
| 5450-0399 | Light Whelen Pioneer Plus 12V model PFP1 flood with side mount pedestal bracket. Includes switch in cab (driver and officer side facing lights switched separately). Location(s): Rearward upper body panel officer side (inboard of warning lights if equipped) | $1,754 |
| 5450-0400 | Light Whelen Pioneer Plus 12V model PFP1 flood with side mount pedestal bracket powder coated black. Includes switch in cab (driver and officer side facing lights switched separately). Location(s): [#LOC]. | $1,754 |
| 5450-0401 | Light Whelen Pioneer Plus model PFP2 12V with internal bottom raise pole mount. Includes switch accessible to driver. Location: [#LOC]. | $2,616 |
| 5450-0402 | Light Whelen PCP3AP1 225W/120V with portable base. Requires 110V receptacle. Location(s): [#LOC]. | $2,731 |
| 5450-0403 | Light Whelen Pioneer Max model PCP3 120V with Whelen external bottom raise pole mount. Location(s): [#LOC]. | $2,966 |
| 5450-0404 | Light Fire Research Spectra Max LED 120V model SPA570-K28 without pole. Location(s): [#LOC]. | $2,752 |
| 5450-0405 | Fire Research Mini Spectra 12V LED model SPA802-R14-02 with brow mount (EA). Includes switch accessible to driver. Location: [#LOC].. | $1,681 |
| 5450-0406 | Fire Research FRC Evolution 12V LED scene light model FCA530-V15-SW-H with external push-up pole powder coated black. Includes switch in cab accessible to driver. Location: [#LOC]. | $2,431 |
| 5450-0407 | Quartz light Fire Research Spectra 120V LED model SPA802-K20-02 with brow mount (EA) powder coated black. Location: [#LOC]. | $2,546 |
| 5450-0408 | Light Whelen Pioneer Plus 12V model PFS2 flood/spot with pedestal mount powder coated FLNA3225E-1 red. Includes switch in cab (driver and officer side facing lights switched separately). Location(s): [#LOC]. | $2,464 |
| 5450-0409 | Light Whelen Pioneer Plus model PFS2 flood/spot with brow mount powder coated FLNA3225E-1 red (EA). Includes switch in cab (driver and officer side facing lights switched separately). Location(s): [#LOC]. | $2,468 |
| 5450-0410 | Light Whelen 12 volt Pioneer Plus model PFS1 flood/spot with brow mount powder coated FLNA3225E-1 red (EA). Includes switch in cab (driver and officer side facing lights switched separately). Location(s): [#LOC]. | $1,714 |
| 5450-0411 | Light shield for FireTech 72" scene light (EA). Smooth aluminum painted black. Location: [#LOC]. | $335 |
| 5450-0412 | Light Whelen Pioneer model PFP1 12V powder coated black with PBA103 recess mount in painted smooth plate boxes. Includes switch accessible to driver (driver and officer side facing lights switched separately). Location: [#LOC]. | $1,620 |
| 5450-0414 | Light FireTech model FT-SL-30-B 12V with internal top raise pole mount (ROM model KR-900-I) pre-assembled from vendor powder coated black. Includes switch in cab accessible to driver (side facing lights switched seperately). Location: [#LOC]. | $2,964 |
| 5450-0415 | FireTech 65" 12V brow light with black housing. Includes switch accessible to driver (driver and officer side facing lights switched separately). Location: [#LOC]. | $3,372 |
| 5450-0416 | Light Whelen 12V Pioneer Plus model PFS2 flood/spot with brow mount (EA). Includes switch in cab (driver and officer side facing lights switched separately). Location(s): [#LOC]. | $2,379 |
| 5450-0418 | Light Whelen 12V Pioneer model PFS2 with external bottom raise pole mount. Includes switch accessible to driver. Location(s) [#LOC]. | $2,602 |
| 5450-0419 | Light Whelen 12V Pioneer Plus model PFS2 flood/spot with pedestal mount. Includes switch in cab (driver and officer side facing lights switched separately). Location(s): [#LOC]. | $2,375 |
| 5450-0421 | Light Whelen 12 volt Pioneer Plus model PTP1 spot light with brow mount (EA) powder coated black. Includes switch in cab (driver and officer side facing lights switched separately). Location(s): [#LOC]. | $1,624 |
| 5450-0422 | Light Whelen Pioneer Plus model PFP1 12V with vertical bail mount powder coated black. Includes switch in cab accessible to driver (side facing lights switched seperately). Location(s): [#LOC]. | $1,393 |

| Item No. | Description | |
|---|---|---|
| 5450-0423 | Light Whelen Pioneer model PFS2 powder coated black with PBA203 recess mount in smooth plate mounting boxes painted job (2-tone if applicable) color. Includes switch in cab (driver and officer side facing lights switched separately). Location: [#LOC]. | $2,508 |
| 5450-0424 | Light Whelen 12V Pioneer model PFS2 powder coated black with PBA203 recess mount. Includes switch in cab accessible to driver (driver and officer side facing lights switched separately). Location: [#LOC]. | $2,288 |
| 5450-0426 | Light Whelen Pioneer Plus model PCP2 120V with bail mount. Location(s): [#LOC]. | $2,082 |
| 5450-0427 | Light Whelen Pioneer Plus model PFP2AC 120V with bail mount powder coated black. Location(s): [#LOC]. | $2,343 |
| 5450-0428 | Light Whelen 12V Pioneer Plus model PFS2 flood/spot with brow mount powder coated black (EA). Includes switch in cab (driver and officer side facing lights switched separately). Location(s): [#LOC]. | $2,379 |
| 5450-0429 | Light Whelen 12V Pioneer Plus model PFS2 flood/spot with pedestal mount powder coated black. Includes switch in cab (driver and officer side facing lights switched separately). Location(s): [#LOC]. | $2,375 |
| 5450-0430 | FireTech 35" 12V mini brow light with white housing. Includes switch in cab (driver and officer side facing lights switched separately). Location: [#LOC]. | $1,983 |
| 5450-0431 | Recess mounting for FireTech scene light. Location: [#LOC]. | $415 |
| 5450-0432 | Light Whelen Pioneer Plus model PFP1 12V w/bail mount platform mounted. Includes hardwired switch on platform console. Location(s): [#LOC]. | $1,435 |
| 5450-0435 | Light Whelen Pioneer Plus model PCP2AFSB 120VAC flood/spot with brow mount (EA). Location(s): [#LOC]. | $2,465 |
| 5450-0436 | FireTech 15" 12V mini double stacked trunnion mount light powder coated black. Includes switch in cab (driver and officer side facing lights switched separately). Location: [#LOC]. | $1,347 |
| 5460-0000 | Light tower Night Scan Powerlite NS3.0-3000M with four 750 watt 115 volt MagnaFire quartz light heads. Requires air brakes or air system and auxiliary air tank. Tower to be located [#LOC]. | $22,833 |
| 5460-0001 | Night Scan Powerlite NS3.0-4500M light tower with six 750 watt 115 volt MagnaFire quartz light heads. Control to be located next to the breaker box. Requires air brakes or air system and auxiliary air tank. Tower to be located [#LOC]. | $24,881 |
| 5460-0002 | Night Scan Powerlite NS4.5-3000M light tower with four 750 watt 115 volt MagnaFire quartz light heads. Control to be located next to the breaker box. Requires air brakes or air system and auxiliary air tank. Tower to be located [#LOC]. | $23,471 |
| 5460-0003 | Night Scan Powerlite NS4.5-4500M light tower with six 750 watt 115 volt MagnaFire quartz light heads. Control to be located next to the breaker box. Requires air brakes or air system and auxiliary air tank. Tower to be located [#LOC]. | $25,282 |
| 5460-0004 | Night Scan Powerlite NS4.5-6000A light tower with four 1500 watt 220 volt quartz light heads. Control to be located next to the breaker box. Requires air brakes or air system and auxiliary air tank. Tower to be located [#LOC]. | $22,138 |
| 5460-0005 | Night Scan Powerlite NS4.5-6000OPT light tower with four 1500 watt 230 volt Optimum quartz light heads. Control to be located next to the breaker box. Requires air brakes or air system and auxiliary air tank. Tower to be located [#LOC]. | $21,839 |
| 5460-0006 | Night Scan Powerlite NS4.5-9000OPT light tower with six 1500 watt 230 volt Optimum quartz light heads. Control to be located next to the breaker box. Requires air brakes or air system and auxiliary air tank. Tower to be located [#LOC]. | $27,336 |
| 5460-0010 | Will-Burt Night Scan extension harness. Required when tower is installed on custom cab roof or more than 20' from controller location. | $1,125 |
| 5460-0011 | Night Scan Chief NS1.8-3000A light tower with two 1500 watt 230 volt quartz light heads. Control to be located next to the breaker box. Tower to be located [#LOC]. | $13,460 |
| 5460-0013 | Command Light light tower model CL 605. Includes (6) 500 watt quartz halogen lights and a green strobe. Location: [#LOC]. | $21,368 |
| 5460-0014 | Command Light light tower model CL 610. Includes (6) 650 watt quartz halogen lights and a green strobe. Location: [#LOC]. | $19,142 |
| 5460-0016 | (LIghts obsolete from vendor)Night Scan Chief NS1.8-140DC light tower with two 70 watt 12 volt I.R. light heads. Control to be located next to the breaker box. Tower to be located [#LOC]. | $11,386 |
| 5460-0019 | Command Light light tower model CL 611. Includes (6) 1000 watt quartz halogen lights and a green strobe. Location: [#LOC]. | $20,631 |
| 5460-0020 | Night Scan Powerlite NS3.0-4500 Profiler light tower with three (3) 1500 watt 230 volt Optimum Fire Research quartz light heads. Control to be located next to the breaker box. Requires air brakes or air system and an auxiliary air tank. Location: [#LOC]. | $21,255 |
| 5460-0021 | Command Light light tower model CL 615. Includes (6) 1500 watt quartz halogen lights and a green strobe. Location: [#LOC]. | $20,631 |
| 5460-0022 | Command Light Knight tower model KL450. Includes (6) 500 watt quartz halogen lights and a green strobe. Location: [#LOC]. | $14,073 |
| 5460-0024 | Command Light light tower model SL429-RT. Includes (2) 1500 watt quartz halogen lights. Control to be located next to the breaker box. Location: [#LOC]. | $9,076 |

| Item No. | Description | |
|---|---|---|
| 5460-0025 | Night Scan Powerlite NS4.5-5400M light tower with six 900 watt 230 volt MagnaFire quartz light heads. Control to be located next to the breaker box. Requires air brakes or air system and auxiliary air tank. Tower to be located [#LOC]. | $23,736 |
| 5460-0026 | Night Scan Chief NS1.8-3000A light tower with two 1500 watt 230 volt quartz light heads. Control to be located next to the breaker box. Tower to be located [#LOC]. | $13,460 |
| 5460-0027 | Command Light tower option back lighting. | $2,111 |
| 5460-0030 | Command Light light tower model KL475HS. Includes (6) 750 watt Magnafire quartz halogen lights and a green strobe. Location: [#LOC]. | $17,371 |
| 5460-0031 | Night Scan Chief NS1.8-3000M light tower with four 750 watt 115 volt MagnaFire quartz light heads. Control to be located next to the breaker box. Tower to be located [#LOC]. | $14,792 |
| 5460-0032 | Command Light light tower model KL475HS. Includes (6) 750 watt Magnafire quartz halogen lights and a red strobe. Location: [#LOC]. | $17,371 |
| 5460-0033 | Night Scan Powerlite NS4.5-3600M light tower with four 900 watt 230 volt MagnaFire quartz light heads. Control to be located next to the breaker box. Requires air brakes or air system and auxiliary air tank. Tower to be located [#LOC]. | $20,962 |
| 5460-0034 | Command Light light tower model CL 615. Includes (4) 1500 watt quartz halogen lights (2) 1000 watt Metal Halide light heads and a green strobe. Locate [#LOC]. | $21,821 |
| 5460-0036 | Night Scan Chief NS2.3-3000M light tower with four 750 watt 115 volt MagnaFire quartz light heads. Control to be located next to the breaker box. Tower to be located [#LOC]. | $13,907 |
| 5460-0038 | Command Light light tower model CL 615. Includes (6) 1000 watt quartz halogen lights and a green strobe. Location: [#LOC]. | $20,631 |
| 5460-0039 | Will-Burt 5.4-17IWM Vertical Light Mast. Includes (4) 1500W Optimum light heads. Locate ceneterd (as applicable) in the forward dunnage pan area over LT/RT. Mast will run into transverse area. Controller to be in L3 forward area for use by the pump operator. | $22,172 |
| 5460-0040 | Night Scan Powerlite NS4.5-6000OPT light tower with four 1500 watt 230 volt Optimum quartz light heads. Light heads and base covers painted job color. Control to be located next to the breaker box. Requires air brakes or air system and auxiliary air tank. Tower to be located [#LOC]. | $25,081 |
| 5460-0042 | Will-Burt 5.4-17 Vertical Light Mast. Includes (6) 1500W Optimum light heads. Locate ceneterd (as applicable) in the forward dunnage pan area over [#LOC]. Mast will run into transverse area. Controls will be located next to breaker box. | $22,172 |
| 5460-0043 | Night Scan Powerlite NS3.0-6000OPT light tower with four 1500 watt 230 volt Optimum quartz light heads. Control to be located next to the breaker box. Requires air brakes or air system and auxiliary air tank. Tower to be located [#LOC]. | $24,881 |
| 5460-0045 | Night Scan Powerlite NS4.5-3000M light tower with four 750 watt 115 volt MagnaFire quartz light heads. Control to be located next to the breaker box. Requires air brakes or air system and auxiliary air tank. Tower to be located [#LOC]. | $23,072 |
| 5460-0046 | Command Light light tower model KL450. Includes black powder coat finish with (6) 500 watt quartz halogen lights and a green strobe. Location: [#LOC]. | $15,389 |
| 5460-0047 | Night Scan Chief NS2.3-6000OPT light tower with four 1500 watt 230 volt FRC Optimum quartz light heads. Control to be located next to the breaker box. Tower to be located [#LOC]. | $13,918 |
| 5460-0048 | Command Light light tower model CL 615 with FRC Optimum lightheads. Includes (6) 1500 watt quartz halogen lights and an amber strobe. Location: [#LOC]. | $25,668 |
| 5460-0050 | Night Scan Powerlite NS 3.0-3600M light tower with four 900 watt 230 volt MagnaFire quartz light heads. Control to be located next to the breaker box. Requires air brakes or air system and auxiliary air tank. Tower to be located [#LOC]. | $20,437 |
| 5460-0053 | Command Light light tower model CL602A with Whelen PFP2AC lightheads. Includes (6) 150 watt LED lights and an amber strobe. Location: [#LOC]. | $33,996 |
| 5460-0059 | Command Light Knight tower model KL465. Includes (6) 650 watt quartz halogen lights. Location: [#LOC]. | $14,073 |
| 5460-0060 | Night Scan Powerlite NS3.0-4000OPT light tower with four 1000 watt 230 volt Optimum quartz light heads and D-TECH II safety system. Control to be located next to the breaker box. Requires air brakes or air system and auxiliary air tank. Tower to be located [#LOC]. | $29,297 |
| 5460-0062 | Light tower disconnect. Provided junction box for 110V wiring and weather proof connector for control wires. | $374 |
| 5460-0064 | Night Scan Chief NS1.8-6000OPT light tower with four 1500 watt 230 volt FRC Optimum quartz light heads. Control to be located next to the breaker box. Requires air brakes or air system and auxiliary air tank. Tower to be located [#LOC]. | $14,460 |
| 5460-0065 | Night Scan Chief 1.8-3600M light tower with four 900 watt 230 volt quartz light heads. Control to be located next to the breaker box. Tower to be located [#LOC]. | $16,190 |
| 5460-0066 | Command Light light tower model CL602D with Whelen PFP2 12V lightheads. Includes (4) 150 watt LED lights and a amber strobe. Location: [#LOC]. | $28,188 |
| 5460-0067 | Night Scan Chief NS2.3-600LED Whelen light tower with (4) 150 watt 12V Whelen Pioneer PFP2 LED light heads. Control to be located next to the breaker box if equipped or the forward wall of L1 if unit has no breaker box. Tower to be located [#LOC]. | $17,784 |

| Item No. | Description | |
|---|---|---|
| 5460-0069 | Command Light Knight tower model KL450. Includes (6) 500 watt quartz halogen lights and a amber strobe. Location: [#LOC]. | $14,073 |
| 5460-0070 | Night Scan Chief NS1.8-3000-4-MGN-110v light tower with four 750 watt 115 volt MagnaFire quartz light heads. Control to be located next to the breaker box. Tower to be located [#LOC]. | $11,461 |
| 5460-0071 | Night Scan Powerlite NS3.0-600WHL light tower with (4) 150 watt 120 volt Whelen Pioneer PFP2AC LED light heads. Control to be located next to the breaker box. Requires air brakes or air system and auxiliary air tank. Ahead of vista location requires riser. Tower to be located [#LOC]. | $31,255 |
| 5460-0072 | Night Scan Powerlite NS3.0-900WHL light tower with (6) 150 watt 120 volt Whelen Pioneer PFP2AC LED light heads. Control to be located next to the breaker box. Requires air brakes or air system and auxiliary air tank. Ahead of vista location requires riser. Tower to be located [#LOC]. | $36,970 |
| 5460-0073 | Night Scan Chief NS1.8-600WHL 120V Whelen light tower with (4) 150 watt 120 volt Whelen Pioneer PFP2AC LED light heads. Control to be located next to the breaker box. Tower to be located [#LOC]. | $26,218 |
| 5460-0074 | Night Scan Chief NS1.8-600 Whelen light tower with (4) 150 watt 12V Whelen Pioneer PFP2 LED light heads. Control to be located next to the breaker box (L1 forward wall w/o breaker box). Tower to be located [#LOC]. | $17,934 |
| 5460-0075 | Night Scan Powerlite NS4.5-900WHL light tower with (6) 150 watt 120 volt Whelen Pioneer PFP2AC LED light heads. Control to be located next to the breaker box. Requires air brakes or air system and auxiliary air tank. Tower to be located [#LOC]. | $37,835 |
| 5460-0076 | Will-Burt Night Scan Powerlite NS4.5-600WHL light tower with (4) 150 watt 120 volt Whelen Pioneer PFP2AC LED light heads. Control to be located next to the breaker box. Requires air brakes or air system and auxiliary air tank. Tower to be located [#LOC]. | $32,030 |
| 5460-0077 | Night Scan Chief NS2.3-600LED Whelen light tower with (4) 150 watt 110V Whelen Pioneer PFP2AC LED light heads. Control to be located next to the breaker box. Tower to be located [#LOC]. | $26,478 |
| 5460-0080 | Night Scan Chief NS2.3-920SPA 12V FRC light tower with (4) 230 watt 12 volt FRC Spectra LED light heads. Control to be located next to the breaker box. Tower to be located [#LOC]. | $23,861 |
| 5460-0081 | Night Scan Chief NS2.3-920SPA 120V FRC light tower with (4) 230 watt 120 volt FRC Spectra LED light heads. Control to be located next to the breaker box. Tower to be located [#LOC]. | $23,861 |
| 5460-0082 | Night Scan Powerlite NS3.0-920SPA light tower with (4) 230 watt 120 volt FRC Spectra LED light heads. Control to be located next to the breaker box. Requires air brakes or air system and auxiliary air tank. Ahead of vista location requires riser. Tower to be located [#LOC]. | $37,115 |
| 5460-0083 | Night Scan Powerlite NS3.0-1380SPA light tower with (6) 230 watt 120 volt FRC Spectra LED light heads. Control to be located next to the breaker box. Requires air brakes or air system and auxiliary air tank. Ahead of vista location requires riser. Tower to be located [#LOC]. | $42,638 |
| 5460-0085 | Night Scan Powerlite NS4.5-1380SPA light tower with (6) 230 watt 120 volt FRC Spectra LED light heads. Control to be located next to the breaker box. Requires air brakes or air system and auxiliary air tank. Tower to be located [#LOC]. | $42,927 |
| 5460-0086 | Command Light light tower model CL 607. Includes (6) 750 watt ROM Magnafire quartz halogen lights and a green strobe. Location: [#LOC]. | $25,831 |
| 5460-0087 | Command Light light tower model CL 607. Includes (6) 750 watt FRC Optimum quartz halogen lights and a green strobe. Location: [#LOC]. | $25,831 |
| 5460-0089 | Command Light light tower model CL602A with FRC 120V Spectra lightheads. Includes (4) 220 watt LED lights. Location: [#LOC]. | $32,825 |
| 5460-0090 | Command Light light tower model CL602A with FRC 120V Spectra lightheads. Includes (6) 220 watt LED lights. Location: [#LOC]. | $33,996 |
| 5460-0091 | Command Light light tower model CL602D with FRC Spectra 12V lightheads. Includes (4) 220 watt LED lights. Location: [#LOC]. | $28,188 |
| 5460-0092 | Command Light light tower model KL475OPT. Includes (6) 750 watt FRC Optimum quartz halogen lights. Location: [#LOC]. | $17,036 |
| 5460-0093 | Command Light light tower model KL415A. Includes (6) 220 watt 120V FRC Spectra LED lights. Control to be located adjacent to breaker box. Location: [#LOC]. | $31,600 |
| 5460-0094 | Command Light light tower model KL415A. Includes (6) 150 watt 120V Whelen Pioneer PFP2 LED lights. Control to be located adjacent to breaker box. Location: [#LOC]. | $31,600 |
| 5460-0095 | Command Light light tower model KL415A. Includes (4) 220 watt 120V FRC Spectra LED lights. Control to be located adjacent to breaker box. Location: [#LOC]. | $25,832 |
| 5460-0096 | Command Light light tower model KL415A. Includes (4) 150 watt 120V Whelen Pioneer PFP2 LED lights. Control to be located adjacent to breaker box. Location: [#LOC]. | $25,832 |
| 5460-0097 | Command Light light tower model KL415D. Includes (4) 220 watt 12V FRC Spectra LED lights. Control to be located adjacent to breaker box. Location: [#LOC]. | $24,390 |
| 5460-0098 | Command Light light tower model KL415D. Includes (4) 150 watt 12V Whelen Pioneer PFP2 LED lights. Control to be located adjacent to breaker box if equipped or L1 forward wall in available space if not otherwise specified. Location: [#LOC]. | $24,390 |
| 5460-0100 | Command Light light tower model SL422D. Includes (2) 150 watt Whelen 12V Pioneer lights. Control to be located next to the breaker box. Location: [#LOC]. | $12,564 |

| Item No. | Description | |
|---|---|---|
| 5460-0101 | Command Light light tower model CL602A-2MH. Includes (4) 110V 220 watt FRC Spectra LED lights and (2) 230V 1000W metal halide lights. Location: [#LOC]. | $35,710 |
| 5460-0102 | Night Scan Chief NS1.8-3000OPT light tower with four 750 watt FRC Optimum quartz light heads. Control to be located next to the breaker box. Tower to be located on [#LOC]. | $14,223 |
| 5460-0103 | Night Scan Powerlite NS3.0-900WHL light tower with (6) 150 watt 120 volt Whelen Pioneer PFP2AC LED light heads. Control to be located next to the breaker box. Requires air brakes or air system and auxiliary air tank. Tower to be located rearward on flat roof (non vista) and mounted side to side and hinged to driver. Placement to allow 45 degree shield to be placed in normal vista rise locations to allow cab to appear to have vista roof. | $36,970 |
| 5460-0106 | Strobe light for Command Light tower. Color: [#COL]. | $364 |
| 5460-0107 | Night Scan Powerlite NS2.3-225WHL Profiler light tower with three (3) 75 watt 12 volt Whelen Pioneer PFP1 light heads. Control to be located next to the breaker box (if equipped). Location: [#LOC]. | $21,500 |
| 5460-0110 | Night Scan Powerlite NS3.0-5400M light tower with six 900 watt 230 volt MagnaFire quartz light heads. Control to be located next to the breaker box. Requires air brakes or air system and auxiliary air tank. [#LOC]. | $23,259 |
| 5460-0111 | Command Light light tower model CL 609. Includes (6) 900 watt ROM Magnafire quartz halogen lights and a green strobe. Location: [#LOC]. | $26,083 |
| 5460-0112 | Night Scan NS3.0-2250M Profiler light tower with three (3) 750 watt 115 volt MagnaFire quartz light heads. Control to be located next to the breaker box. Requires air brakes or air system and an auxiliary air tank. Location: [#LOC]. | $21,255 |
| 5460-0113 | Command Light light tower model KL475. Includes (6) 750 watt Magnafire quartz halogen lights. Location: [#LOC]. | $17,036 |
| 5460-0114 | Night Scan Chief NS1.8-300LED Whelen light tower with (2) 150 watt 12 volt Whelen Pioneer PFP2 LED light heads. Control to be located adjacent to breaker box. Tower to be located [#LOC]. | $14,174 |
| 5460-0116 | Night Scan Powerlite NS4.5-2100SPA light tower with (6) 350 watt 120 volt FRC Spectra LED light heads. Control to be located next to the breaker box. Requires air brakes or air system and auxiliary air tank. Tower to be located [#LOC]. | $44,105 |
| 5460-0118 | Command Light light tower model SL447-FO. Includes (4) 750 watt 120V FRC Optimum quartz halogen lights. Control to be located next to the breaker box. Location: [#LOC]. | $10,787 |
| 5460-0120 | Command Light light tower model CL602D with FRC Spectra 12V lightheads. Includes (4) 220 watt LED lights. Tower and lightheads powder coated black. Location: [#LOC]. | $30,878 |
| 5460-0121 | Night Scan Chief NS2.3-500-4 LED light tower with (4) 125 watt 12V Will-burt XL 160 LED light heads. Control to be located next to the breaker box if equipped or the forward wall of L1 if unit has no breaker box. Tower to be located [#LOC]. | $17,368 |
| 5460-0122 | Command Light light tower model CL615-4HM. Includes (2) 1500 watt quartz halogen lights and (4) 1000 watt Metal Halide light heads. Locate [#LOC]. | $27,732 |
| 5460-0123 | Night Scan Chief NS2.3-460SPC light tower with (2) 230 watt 120 volt FRC Spectra LED light heads and a Sidewider standard defenition analog camera system. Tower control to be located next to the breaker box. Camera system controls located on interior desk area. Tower to be located [#LOC]. | $31,960 |
| 5460-0124 | Command Light light tower model SL442D-FS. Includes (4) 230 watt FRC 12V Spectra lights. Control to be located next to the breaker box or L1 if not equipped. Location: [#LOC]. | $19,219 |
| 5460-0125 | Command Light tower powder coat color in place of standard. Color: [#COL]. | $1,329 |
| 5460-0126 | Command Light light tower model KL415A-FX. Includes (6) 335 watt 120V FRC Spectra Max LED lights. Control to be located adjacent to breaker box. Location: [#LOC]. | $32,869 |
| 5460-0127 | Will-Burt 5.4-17 Vertical Light Mast. Includes (6) 750W Magnafire light heads. Locate centered in hosebed pan offset forward. Controls will be located next to breaker box. | $21,478 |
| 5460-0128 | Will-Burt light tower black in place of standard. Includes covers mast and lights. | $1,958 |
| 5460-0129 | Command Light light tower model KL415D-HF. Includes (4) FireTech LED lights. Control to be located adjacent to breaker box or L1 forward wall if not equipped with breaker box. Location: [#LOC]. | $24,986 |
| 5460-0130 | Command Light light tower model SL442A-FS. Includes (4) 230 watt FRC 120V Spectra lights. Control to be located next to the breaker box. Location: [#LOC]. | $19,219 |
| 5470-0000 | Receptacle twist lock 15A/110V 3 wire NEMA L5-15 with cover plate. Location: [#LOC]. | $319 |
| 5470-0001 | Receptacle twist lock 20A/110V 3 wire NEMA L5-20 with cover plate. Location: [#LOC]. | $333 |
| 5470-0002 | Receptacle twist lock 30A/110V 3 wire NEMA L5-30 with cover plate. Location: [#LOC]. | $358 |
| 5470-0004 | Receptacle household 20A/110V duplex 3-prong NEMA 5-20 with cover plate interior mounted wired to inlet receptacle. Location: [#LOC]. | $314 |
| 5470-0005 | Receptacle household 15A/110V Daniel Woodhead duplex 3 wire NEMA 5-15 w/Daniel Woodhead cover plate. Location: [#LOC] | $579 |
| 5470-0006 | Receptacle twist lock 15A/110V Daniel Woodhead 3 wire NEMA L5-15 w/Daniel Woodhead cover plate. Location: [#LOC] | $520 |
| 5470-0007 | Receptacle twist lock 15A/220V Daniel Woodhead 3 wire NEMA L6-15 w/Daniel Woodhead cover plate. Location: [#LOC] | $657 |

| Item No. | Description | |
|---|---|---|
| 5470-0008 | Receptacle twist lock 20A/110V Daniel Woodhead 3 wire NEMA L5-20 w/Daniel Woodhead cover plate. Location: [#LOC]. | $536 |
| 5470-0009 | Receptacle twist lock 20A/220V Daniel Woodhead 3 wire NEMA L6-20 w/Daniel Woodhead cover plate. Location: [#LOC] | $708 |
| 5470-0010 | Receptacle twist lock 20A 110V/220V Daniel Woodhead 4 wire NEMA L14-20 w/Daniel Woodhead cover plate. Location: [#LOC] | $734 |
| 5470-0011 | Receptacle twist lock 15A/220V 3 wire NEMA L6-15 with cover plate. Location: [#LOC] | $464 |
| 5470-0012 | Receptacle twist lock 20A/220V 3 wire NEMA L6-20 with cover plate. Location: [#LOC]. | $464 |
| 5470-0013 | Receptacle twist lock 20A 110V/220V 4 wire NEMA L14-20 with cover plate. Location: [#LOC]. | $631 |
| 5470-0014 | Receptacle twist lock 30A/220V 3 wire NEMA L6-30 with cover plate. Location: [#LOC]. | $631 |
| 5470-0015 | Receptacle twist lock 30A 110V/220V 4 wire NEMA L14-30 with cover plate. Location: [#LOC] | $625 |
| 5470-0016 | Receptacle shoreline 30A/110V with auto transfer switch. The receptacle shall be located [#LOC]. | $1,068 |
| 5470-0017 | Receptacle household 20A/110V duplex 3-prong NEMA 5-20 with cover plate. Location: [#LOC]. | $303 |
| 5470-0018 | Receptacle shoreline 50A/220V with auto transfer switch. The receptacle shall be located [#LOC]. | $1,077 |
| 5470-0019 | Receptacle FirePower 20A/110V model FP-11 with cover plate. Location: [#LOC]. | $368 |
| 5470-0020 | Receptacle 12V military with A pin Positive B pin Negative C pin Blank. Location: [#LOC] | $252 |
| 5470-0021 | 12 volt power point wired battery hot. Location [#LOC] | $61 |
| 5470-0023 | Fuse 15A in B1 compt for 12V power point receptacle. | $96 |
| 5470-0024 | Receptacle 15A/110V duplex with (1) 3-prong NEMA 5-15 and (1) twist lock NEMA L5-15 with cover plate. Location: [#LOC]. | $340 |
| 5470-0025 | Receptacle household 30A/110V 3-prong NEMA 5-30 with cover plate. Location: [#LOC] | $347 |
| 5470-0026 | Receptacle household 15A/110V duplex 3-prong NEMA 5-15 with cover plate interior mounted wired to inlet receptacle. Location: [#LOC]. | $291 |
| 5470-0027 | Household switch with weaterproof cover located near receptacle at [#LOC]. Switch to operate single leg of this duplex receptacle. | $523 |
| 5470-0028 | Receptacle household 20A/110V Daniel Woodhead duplex 3 wire NEMA 5-20 w/Daniel Woodhead cover plate. Location: [#LOC]. | $595 |
| 5470-0029 | Receptacle Hubbell twist lock 20A 110V/250V 3 wire NON-NEMA with cover plate. Location: [#LOC]. | $396 |
| 5470-0030 | Receptacle twist lock 15A/110V 3 wire NEMA L5-15 with yellow Daniel Woodhead cover plate. Location: [#LOC]. | $389 |
| 5470-0031 | Receptacle twist lock 15A/110V duplex 3 wire NEMA L5-15 with yellow Daniel Woodhead cover plate. Location: [#LOC]. Top duplex will be hooked to toogle switch next to it. | $657 |
| 5470-0032 | Receptacle 12V Marinco model 2018BR with model 2018MB cover wired battery hot. Includes model 2018BP male connector. Location: [#LOC]. | $440 |
| 5470-0034 | Receptacle shoreline 50A/220V. The receptacle shall be located [#LOC]. No additional breaker box is included in this code. | $289 |
| 5470-0036 | 9 outlet Stanley model 31610 household 15A/110V power strip wired to inlet receptacle. Location: [#LOC]. | $189 |
| 5470-0039 | Receptacle NON-NEMA locking 20A 120V/250V Daniel Woodhead model 67W08 w/Daniel Woodhead cover plate. Location: [#LOC]. | $734 |
| 5470-0040 | Receptacle twist lock 50A/220V 3 wire NEMA L6-50 with cover plate. Location: [#LOC]. | $767 |
| 5470-0041 | Receptacle household 15A/110V duplex 3-prong NEMA 5-15 with cover plate interior mounted wired to inlet receptacle. Location: R1 forward wall 24" up. | $291 |
| 5470-0042 | Auto-Eject receptacle inlet 30 amp 120 volt with auto transfer switch. The receptacle shall be located [#LOC] and with a [#COL] cover. | $1,552 |
| 5470-0047 | 6 outlet household 15A/110V power strip wired to inlet receptacle. Location: [#LOC]. | $218 |
| 5470-0048 | Service 30A/220V 4 wire with junction box. Location: [#LOC]. | $488 |
| 5470-0051 | 6 outlet household 20A/110V power strip wired to inlet receptacle. Location: [#LOC]. | $218 |
| 5470-0053 | Receptacle inlet 110 VAC L5-30 Amp twist lock with a [#COL] cover. Location: [#LOC]. | $292 |
| 5470-0054 | Receptacle household 15A/110V duplex 3-prong NEMA 5-15 with cover plate interior mounted wired to generator (not wired to inlet/shoreline). Location: [#LOC]. | $291 |
| 5470-0055 | Receptacle household 15A/110V duplex 3-prong NEMA 5-15 with cover plate. This receptacle shall be GFCI protected and have a push button reset on the receptacle. Location: [#LOC]. | $316 |
| 5470-0057 | Receptacle household 20A/110V duplex 3-prong NEMA 5-20 with cover plate interior mounted wired to generator (not wired to inlet/shoreline). Location: [#LOC]. | $303 |
| 5470-0060 | Receptacles household 15A/110V duplex 3-prong NEMA 5-15 and 20A/110V twist lock receptacle NEMA L5-20 with cover plates. The receptacles shall be GFCI protected. The 5-15 receptacle shall have a push button reset on the receptacle the L5-20 shall be GFCI protected at the breaker. Location: (1) set of (2) 5-15 and (1) L5-20 GFCI receptacles each side in cab wheel well area. | $812 |
| 5470-0061 | Grainger model 2MV42; 6 outlet household 15A/110V power strip wired to inlet receptacle. Location: [#LOC]. | $342 |
| 5470-0066 | 12 volt power point wired battery hot. Location: in rear walkin body on forward wall above desk driver side. | $61 |
| 5470-0067 | 12 volt power point wired battery hot. Location: Inside walkin body compartment DS2 low on back wall as far forward as posable. REF customer drawing | $61 |

| Item No. | Description | |
|---|---|---|
| 5470-0068 | 12 volt power point wired battery hot. Location: Inside walkin body compartment OS2 low on back wall as far forward as posable. REF customer drawing | $61 |
| 5470-0071 | Receptacle household 15A/110V duplex 3-prong NEMA 5-15 with cover plate interior mounted wired to inlet receptacle and shall include as part of the receptacle 15 amp over current protection. This receptacle shall be GFCI protected and have a push button reset on the receptacle. Location: [#LOC]. | $344 |
| 5470-0072 | Each receptacle shall be labeled to identify the power source (Shoreline Generator). | $126 |
| 5470-0075 | Receptacle household 30A/220V 3 wire NEMA 6-30 with cover plate. Location: [#LOC]. | $631 |
| 5470-0076 | Receptacle Hubbell twist lock 15A/110V 3 wire NEMA L5-15 with cover plate. Location: [#LOC]. | $396 |
| 5470-0077 | Receptacle Hubbell twist lock 20A/250V 4 wire NEMA L15-20 with cover plate. Location: [#LOC]. | $396 |
| 5470-0080 | Receptacle; Schuko 250V model 70310 with weatherproof cap. Location: [#LOC]. | $464 |
| 5470-0081 | Receptacle household 20A/110V duplex 3-prong NEMA 5-20 with cover plate exterior mounted wired to inlet receptacle. Location: [#LOC]. | $314 |
| 5470-0082 | Receptacle 20A/220V 3 wire NEMA 6-20 with cover plate wired to inlet receptacle. Location: [#LOC]. | $464 |
| 5470-0084 | Receptacle household 20A/110V double gang (four outlets) 3-prong NEMA 5-20 with cover plate interior mounted wired to inlet receptacle. Location: [#LOC]. | $612 |
| 5500-0004 | Code3 V-Con #3692 siren recessed mounted. | $769 |
| 5500-0005 | Federal Signal electronic EQ2B-EF siren. Includes 200 watt speaker with square "E-ONE" grille. Speaker location: [#LOC]. | $3,872 |
| 5500-0006 | Federal electronic e-Q2B siren. Includes "Q" grille. Speaker location: [#LOC]. | $4,389 |
| 5500-0007 | Federal MS4000 siren recessed mounted. | $874 |
| 5500-0009 | Federal PA300 electronic siren recessed mounted. | $722 |
| 5500-0010 | Federal Q2B siren - flush mounted in bumper. Location: [#LOC]. | $3,084 |
| 5500-0011 | Federal Q2B siren - Pedestal mounted on bumper. Location: [#LOC]. | $2,779 |
| 5500-0012 | Prewire for Federal Q2B mechanincal siren. Driver side front bumper. | $288 |
| 5500-0015 | Whelen model 295SLSA1 siren with microphone (replaced 295HFSA1). | $958 |
| 5500-0016 | Code 3 V-Con #3672 siren recessed mounted. | $769 |
| 5500-0017 | Whelen model 295HFSM1 siren with mechanical siren tone and microphone. N/A in California. | $1,052 |
| 5500-0019 | Code 3 #3997 siren. Requires (1) 200 watt or (2) 100 watt speakers. | $1,766 |
| 5500-0020 | Federal PA4000 siren recessed mounted. Includes horn ring select switch (Tap II / DOT / electronic air horn sound) on face of siren. Note: Switch will be non-functional when E-ONE installed horn ring select switch is supplied. | $771 |
| 5500-0022 | Federal PA300 siren mounted on electrical access panel between the driver and officer front seats. | $722 |
| 5500-0023 | Unitrol model UTM1 siren with option to disable Hi/Low feature (UOP09). Route radio re-broadcast cable to officer side overhead for OCFA radio installation. | $770 |
| 5500-0026 | (MS100 speakers Obsolete from Vendor)Federal electronic Q2B-EF siren. Includes two MS100 speakers with square "EF" grills. Speaker location: [#LOC]. | $4,006 |
| 5500-0027 | Signal Vehicle Products model SS741MG siren recessed mounted. | $608 |
| 5500-0030 | Code 3 #3997R siren. Requires (1) 200 watt or (2) 100 watt speakers. | $1,766 |
| 5500-0031 | Whelen model 295HFSA7 siren with microphone. | $1,498 |
| 5500-0032 | Federal / Unitrol #U480K-4 siren. | $1,587 |
| 5500-0034 | Federal Rumbler secondary siren. Includes amp timer and two speakers mounted under vehicle. Requires control switch. | $1,263 |
| 5500-0036 | Whelen model 295HFSC9 siren with microphone. N/A in California. | $1,203 |
| 5500-0037 | Federal PA300 siren recessed mounted. Microphone to be removed and a plug is to be installed in the wiring hole. | $722 |
| 5500-0038 | Federal / Unitrol #UTM4 siren. | $1,604 |
| 5500-0040 | Powercall DX5200 siren control. For use with (1) 200 watt speaker or up to (2) 100W speakers. | $963 |
| 5500-0041 | Federal electronic Q2B-EF siren. Includes two (2) ES100 speakers with square "E-ONE" grilles. Speaker location: [#LOC]. | $4,006 |
| 5500-0044 | Whelen model 295HFSA7 siren with microphone. Microphone to be removed (shipped loose) and a plug is to be installed in the wiring hole. | $1,498 |
| 5500-0045 | Whelen model 295SLSC1 siren with plug-in microphone. N/A in California. | $958 |
| 5500-0048 | Federal PA300 100W siren recessed mounted. | $677 |
| 5500-0049 | Whelen Howler secondary siren. Includes amp timer and two speakers mounted under vehicle. | $1,278 |
| 5500-0050 | Integrated Siren System with dual control heads. No microphone or volume control. | $883 |
| 5500-0051 | Federal PA300R siren with single control. PA control and volume switch located on electrical access panel. | $868 |
| 5500-0052 | Federal PA640 electronic siren recessed mounted. | $722 |
| 5500-0054 | Federal / Unitrol #UTM1 siren. | $1,160 |
| 5500-0059 | Whelen model 295SL100 siren with microphone (replaced 295HF100). | $904 |
| 5500-0060 | Whelen Howler secondary siren. Includes amp timer and two speakers mounted under gravelshield. | $1,278 |

| Item No. | Description | |
|---|---|---|
| 5500-0062 | Screaming Eagle flange mount siren in bumper. Location: [#LOC]. | $3,106 |
| 5500-0063 | Federal electronic Q2B-EF siren. Includes two ES100 speakers. Speaker location: [#LOC]. | $4,006 |
| 5500-0066 | Whelen model 295SLSA1 siren without microphone. | $958 |
| 5500-0067 | Whelen model 295SLSC1 siren without microphone. N/A in California. | $958 |
| 5500-0068 | Pre-wire for Tomar Emitter. Coil 4' of wire in driver's overhead panel. | $288 |
| 5500-0069 | Prewire for Federal Q2B mechanincal siren. Officer side front bumper. | $288 |
| 5500-0070 | Federal Signal electronic EQ2B-EF siren. Includes 200 watt speaker with "EF" grille. Speaker location: [#LOC]. | $3,872 |
| 5500-0072 | Powercall X71 siren control. For use with (1) 100W speaker. Locate switch on officer side switch panel. | $610 |
| 5500-0074 | Whelen model 295HFS2 siren with flush mount siren head remote amplifier and microphone. N/A in California. | $1,102 |
| 5500-0075 | Carson SA-400M siren recessed mounted. | $1,188 |
| 5500-0076 | Federal Q2B siren - flush mounted in bumper. Incudes diamond plate housing for siren to space outward to clear in bumper options. Location: center front bumper. | $3,274 |
| 5500-0080 | Federal Q2B siren - Recess mounted in bumper. Front of grille behind circular bumper cut-out. Requires 12" heavy duty bumper. Location: [#LOC]. | $3,640 |
| 5500-0081 | Powercall 6 Adam siren. For use with (1) 200 watt speaker or (2) 100W speakers. | $940 |
| 5500-0083 | Carson SA-441M remote siren. | $1,448 |
| 5500-0084 | Whelen Alpha12S siren located [#LOC] with a Federal Signal ES100 speaker located on the driver side rear of body. | $1,324 |
| 5500-0085 | Screaming Eagle nesting eagle mount siren in bumper. Location: [#LOC]. | $3,512 |
| 5500-0088 | Q2B Siren Focuser chrome plated housing to direct sound forward. | $706 |
| 5510-0002 | Speaker Federal BP200 mounted through bumper. Location: [#LOC]. | $1,208 |
| 5510-0003 | Speaker Federal CP100S pedestal mounted. Location: [#LOC]. | $789 |
| 5510-0006 | Speaker Federal ES100-MSBMT. Location: [#LOC]. | $469 |
| 5510-0007 | Speaker Cast Products SA2401 100W thru bumper. Location: [#LOC]. | $527 |
| 5510-0008 | Speaker Cast Products SA3501 100W through bumper. Location: [#LOC]. | $584 |
| 5510-0009 | Federal TS100-N speaker mounted on pump panel. | $477 |
| 5510-0012 | Speaker Federal TS100 through bumper with E-ONE grille. Location: [#LOC]. | $560 |
| 5510-0013 | Speaker Federal Dynamax MS100-EF thru bumper. Location: [#LOC]. | $560 |
| 5510-0016 | Code 3 PB100C electronic siren speaker recessed in front bumper. Location: [#LOC]. | $549 |
| 5510-0017 | Speaker Cast Products SA2403 100W thru bumper. Location: [#LOC]. | $527 |
| 5510-0019 | University Sound speaker model MIS8C with seperate on / off switch. Locate on driver side upper module area with wire terminating in the center overhead console. | $353 |
| 5510-0021 | Speaker Federal TS100-N mounted on driver side front compartment face. | $477 |
| 5510-0023 | Speaker Atkinson Dynamics (Federal) mounted on pump panel. | $642 |
| 5510-0026 | Code 3 FM100C electronic siren speaker recessed in front bumper. Location: [#LOC]. | $633 |
| 5510-0027 | Speaker volume control on pump panel for pump panel mtd speaker. Locate next to speaker. Includes 16-18 gauge audio cable run from volume control to center overhead area leave a 30" coil of wire. | $455 |
| 5510-0028 | Speaker Federal Dynamax ES100. Located officer's side behind tow hook. Navistar 4400 chassis only. | $560 |
| 5510-0029 | Speaker Federal Signal Dynamax ES100 with "E-ONE" grille through bumper. Location: [#LOC]. | $560 |
| 5510-0031 | Whelen SA314P electronic siren speaker recessed in front bumper with polished trim ring. Location: [#LOC]. | $780 |
| 5510-0034 | Whelen SA315P electronic siren speaker mounted behind front bumper cut-out. Location: [#LOC]. | $517 |
| 5510-0038 | Speaker Federal Dynamax ES100 with "E-ONE" grille. Located Driver side recess behind pump panel. | $609 |
| 5510-0041 | Speaker Federal Signal Dynamax ES100. Location: [#LOC]. | $560 |
| 5510-0042 | Speaker Atkinson Dynamics (Federal) model AD-SF-25 flush mounted with volume controls. Location: [#LOC]. | $709 |
| 5510-0044 | Whelen SA315P electronic siren speaker located behind front bumper. Location: [#LOC]. | $517 |
| 5510-0045 | Speaker Federal Signal Dynamax ES100 with "E-ONE" grille. Location: [#LOC]. | $560 |
| 5510-0046 | Speaker Federal BP100 mounted through bumper. Location: [#LOC]. | $767 |
| 5510-0047 | Speakers (Pair) Federal Signal Dynamax ES100 through bumper with smooth plate grille painted same color as the heavy duty bumper and sufficient surface area for lettering. Locate both speakers next to each other center of the bumper with one common grill covering them. | $1,326 |
| 5510-0049 | Whelen SP123BMC electronic siren speaker recessed in front bumper. Location: [#LOC]. | $580 |
| 5510-0050 | Speaker PowerCall Feniex with "E-ONE" grille through bumper. Location: [#LOC]. | $396 |
| 5550-0006 | Whelen LED 6/2/2 lower level warning light package. Includes (6) 600 series (2) 400 series and (2) 500 series light heads w/weatherproof connectors. Locate side facing lights: [#LOC]. | $3,320 |
| 5550-0007 | Whelen LED 8/2 lower level warning light package. Includes (8) 600 series and (2) 500 series light heads w/weatherproof connectors. Locate side facing lights: [#LOC]. | $3,576 |

| Item No. | Description | |
|---|---|---|
| 5550-0008 | Whelen strobe/LED 6/2/2 lower level warning light package. Includes (6) 600 series strobes (2) 400 series strobes and (2) 500 series LED light heads w/weatherproof connectors and required power supplies. Locate side facing lights: [#LOC]. | $3,204 |
| 5550-0010 | Whelen 600 series LED lower level warning light package. Includes (10) LED light heads w/weatherproof connectors. Locate side facing lights: [#LOC]. | $3,933 |
| 5550-0012 | Whelen 600 series strobe lower level warning light package. Includes (10) strobe lights w/weatherproof connectors and required power supplies. Locate side facing lights: [#LOC]. | $3,701 |
| 5550-0013 | Federal Signal strobe/halogen lower level warning light package. Includes (8) strobe (2) GH1F halogen lts and required power supplies. Locate side facing lights: [#LOC]. | $3,123 |
| 5550-0014 | Federal Signal GS5 strobe lower level warning light package. Includes (10) Lights and required power supplies. Locate side facing lights: [#LOC]. | $3,564 |
| 5550-0021 | Federal Signal GL5 LED lower level warning light package. Includes Ten (10) GL5-R lights. Locate side facing lights: [#LOC]. | $2,852 |
| 5550-0028 | Code3 strobe/halogen 6/4 lower level warning light package. Includes (6) 40 series strobe lights and (4) OL135 halogen lights and required power supplies. Locate side facing lights: [#LOC]. | $4,824 |
| 5550-0029 | Code3 halogen 4/6 lower level warning light package. Includes Includes (6) 41 series and (4) OL135 halogen lights. Locate side facing lights: [#LOC]. | $2,424 |
| 5550-0030 | Code3 model 65 red LED lower level warning light package. Includes (10) LED lights. Locate side facing lights: [#LOC]. | $4,156 |
| 5550-0049 | Code3 LED 6/2/2 lower level warning light package. Includes (8) model 65 red LED and (2) LXEX1F-R LED lights. Includes chrome bezels where applicable. Locate side facing lights: [#LOC]. | $3,288 |
| 5550-0052 | Flash rate for Federal LED lower level warning lights to be set at pattern 2 (102 TFPM). | $93 |
| 5550-0053 | Flash rate for Federal LED lower level warning lights to be set at pattern 8 (150 FPM). | $93 |
| 5550-0054 | Whelen 600 series Super LED lower level warning light package. Includes (10) red LED light heads w/chrome flanges. Locate side facing lights: [#LOC]. | $3,122 |
| 5550-0055 | Federal Signal QuadraFlare LED lower level warning light package. Includes (10) QL64XF-R LED light heads with bezels. Locate side facing lights: [#LOC]. | $2,611 |
| 5550-0059 | Whelen Super LED lower level warning light package. Includes (8) red 600 LED light heads and (2) red 500 LED light heads w/chrome flanges. Locate side facing lights: [#LOC]. | $2,950 |
| 5550-0060 | Code3 LED 6/2/2 lower level warning light package. Includes (4) 65BZR (2) 65FR (2) 85BZR low on rear and (2) LXEX1F-R. Locate side facing lights: [#LOC] | $3,641 |
| 5550-0066 | Tomar lower level warning light package. Includes RECT-46 LED in front quad bezels (to alternate flash drv side blue ofc side red) RECT-79SS on ends of bumper gravel shield (clear frt red rear) in angled forward bezel RECT-37SS on side of cab down low just ahead of rear cab doors and in rear ww offset forward (red frt/ blue rear) RECT-25 LED (red) in rubrail side facing at rear of body RECT-46 LED (drv side blue / ofc side red) rear facing down low three 780-1228-WP power supplies 930DM-LED-LB flasher for frt lts and chrome flanges on applicable lts. | $7,788 |
| 5550-0067 | Flash rate for Federal QuadraFlare LED lower level warning lights to be set at pattern 4 (75 QFPM). | $93 |
| 5550-0069 | Flash rate for Federal QuadraFlare LED lower level warning lights to be set at pattern 5 (150 DFPM). | $93 |
| 5550-0070 | Whelen LED lower level NFPA warning light package (includes upper rear compartment face mounted lights that are wired into lower level switching). Includes (14) lights (8/6). | $5,156 |
| 5550-0072 | Whelen 600 series Super LED lower level warning light package. Includes (8) red/amber and (2) red LED light heads w/chrome flanges. Locate side facing lights: [#LOC]. | $3,519 |
| 5550-0073 | Whelen Super LED lower level warning light package. Includes (8) 600 Super LED light heads and (2) 900 Super LED light heads w/chrome flanges where applicable. Locate side facing lights: [#LOC]. | $3,436 |
| 5550-0074 | Whelen Super LED 4/2/2/2 lower level warning light package. Includes (4) 600 (2) 900 split (2)700 split and (2) 500 LED light heads w/weatherproof connectors. Locate side facing lights: at forward most position (900) centered in rear wheelwell (700) and in rubrail (500) side facing at rear of body. | $4,542 |
| 5550-0077 | Federal Signal QuadraFlare LED upper level side warning light package. Includes (4) QL64XF red LED light heads with bezels. Located 2 side facing on Driver and Officer side upper rear corners. | $1,259 |
| 5550-0083 | Federal Signal QuadraFlare LED upper level rear warning light package. Includes (2) QL64XF red LED light heads with bezels. Located (1) driver and (1) officer upper rear corners. | $632 |
| 5550-0086 | Whelen 900 series Super LED upper level side warning light package. Includes (2) red Whelen 900 Super LED model 90RR5FRR lights. Includes weatherproof connectors. Located (1) on the driver and (1) on the officer side upper rear side corners. | $1,151 |
| 5550-0088 | Whelen 900 series Super LED upper level rear panel warning light package. Includes (2) red Whelen 900 Super LEDs lights model 90RR5FRR. Includes weatherproof connectors. Located (1) driver and (1) officer upper rear corners. | $1,151 |
| 5550-0091 | Whelen strobe/LED 6/2/2 lower level warning light package. Includes (6) 600 series strobes (2) 700 series strobes and (2) 500 series LED light heads w/weatherproof connectors and required power supplies. Locate side facing lights: [#LOC]. | $3,275 |

| Item No. | Description | |
|---|---|---|
| 5550-0092 | Whelen strobe/LED 6/2/2 lower level warning light package. Includes (6) 600 series super LED (2) 700 series split lens strobes and (2) 500 series super LED light heads w/weatherproof connectors and required power supplies. Locate side facing lights: [#LOC] | $3,734 |
| 5550-0093 | Whelen Super LED lower level warning light package. Includes (6) 600 LED red light heads (2) 400 LED red light heads and (2) 500 red LED light heads w/chrome flanges. Locate side facing lights: [#LOC] | $2,815 |
| 5550-0094 | Federal Signal strobe lower level warning light package. Includes (8) GS5 strobes and (2) GS2 strobes lts. All lenses to be blue except mid-body which are red. Locate side facing lights: [#LOC] | $3,564 |
| 5550-0095 | Whelen Super LED lower level warning light package. Includes (7) 600 red LED light heads and (3) 600 blue LED light head w/chrome flanges. Locate side facing lights: [#LOC] | $3,122 |
| 5550-0096 | Weldon Diamondback V46 LED lower level warning light package. Includes (10) red LED light heads w/chrome flanges. Locate side facing lights: [#LOC]. | $3,171 |
| 5550-0097 | Whelen 400 series linear Super LED lower level warning light package. Includes (10) red LED light heads w/chrome flanges. Locate side facing lights: [#LOC]. | $4,774 |
| 5550-0099 | Whelen Super LED lower level warning light package. Includes (4) red 600 LED light heads (4) red/clear 600 split LED light heads and (2) red 500 LED light heads w/chrome flanges. Locate side facing lights: [#LOC]. | $3,921 |
| 5550-0101 | Whelen Super LED lower level warning light package. Includes (6) 600 red LED light heads (2) 900 red LED light heads and (2) 500 red LED light heads w/chrome flanges. Locate side facing lights: [#LOC]. | $3,101 |
| 5550-0102 | Whelen Super LED lower level warning light package. Includes (6) 600 LED light heads (2) 900 LED light heads and (2) 500 LED light heads w/chrome flanges. Locate side facing lights: [#LOC]. | $3,101 |
| 5550-0103 | Whelen Super LED lower level warning light package. Includes (8) 600 Super LED light heads and (4) 500 Super LED light heads w/chrome flanges where applicable. Locate side facing lights: [#LOC]. | $4,068 |
| 5550-0104 | Whelen 600 series Super LED lower level warning light package. Includes (8) red and (2) red/white LED light heads w/chrome flanges. Locate side facing lights: [#LOC]. | $3,642 |
| 5550-0106 | Whelen Super LED lower level warning light package. Includes (6) 600 red LED light heads (2) 400 amber LED light heads and (2) 500 red LED light heads w/chrome flanges. Locate side facing lights: [#LOC]. | $2,815 |
| 5550-0109 | Federal Signal QuadraFlare LED lower level warning light package. Includes (5) QL64XF-R LED light heads with bezels and (5) QL64XF-B LED light heads with bezels. Lights to alternate red/blue around unit; see specificaton. Locate side facing lights: [#LOC]. | $2,611 |
| 5550-0110 | Whelen Super LED lower level warning light package. Includes (4) red 600 LED light heads (4) blue 600 LED light heads (1) red 500 LED light head and (1) blue 500 LED light head. LIghts to alternate red/blue around unit; see specification. Locate side facing lights: [#LOC]. | $2,950 |
| 5550-0112 | Federal Signal QuadraFlare LED upper level side warning light package. Includes (2) QL97XF red LED light heads with bezels. Located (1) side facing on Driver and Officer side upper rear corners. | $909 |
| 5550-0113 | Federal Signal QuadraFlare LED upper level rear warning light package. Includes (2) QL97XF red LED light heads with bezels. Located (1) Driver and (1) Officer upper rear corners. | $909 |
| 5550-0114 | Weldon Diamondback V46 LED lower level warning light package. Includes (10) red LED light heads w/clear lenses and chrome flanges. Locate side facing lights: [#LOC]. | $3,171 |
| 5550-0117 | Whelen Super LED lower level warning light package. Includes (6) 600 Super LED light heads (2 red forward/2 red rearward/2 amber rearward) and (6) side facing 500 Super LED red light heads w/chrome flanges where applicable. Requires additional side facing lights midship to meet blocking mode. Locate side facing lights: [#LOC]. | $4,024 |
| 5550-0123 | Whelen M6 Super LED lower level warning light package. Includes (8) red M6R LED light heads and (2) red 500 Super LED light heads w/chrome flanges. Locate side facing lights: [#LOC]. | $3,286 |
| 5550-0125 | Whelen M6RC Super LED lower level warning light package. Includes (8) red M6RC LED light heads and (2) red 500 Super LED light heads w/chrome flanges and clear lenses. Locate side facing lights: [#LOC]. | $3,286 |
| 5550-0127 | Federal Signal QuadraFlare LED lower level warning light package. Includes (10) QL64XFC-R LED light heads with clear lenses and bezels. Locate side facing lights: [#LOC]. | $2,611 |
| 5550-0128 | Whelen Super LED lower level warning light package. Includes (6) red 600 LED light heads (2) red LIN3 lights and (2) red 500 LED light heads w/chrome flanges. Locate side facing lights: [#LOC]. | $2,950 |
| 5550-0129 | Whelen 600 series Super LED lower level warning light package. Includes (5) red LED light heads w/chrome flanges and (5) blue LED light heads w/chrome flanges. LIghts to alternate red/blue around unit; see specification. Locate side facing lights: [#LOC]. | $3,122 |
| 5550-0130 | Weldon Diamondback V46W-C/V26W-C LED lower level warning light package. Includes (8) red V46 LED light heads w/clear lenses and (2) red V26 LED light heads w/clear lenses. Locate side facing lights: [#LOC]. | $3,062 |
| 5550-0131 | Whelen Super LED lower level warning light package. Includes (8) 600 LED light heads (7 red1 blue rear facing officer side) and (2) red 500 LED light heads w/chrome flanges. Locate side facing lights: [#LOC]. | $2,950 |
| 5550-0132 | Whelen Super LED lower level warning light package. Includes (8) red 600 LED light heads and (2) red TIR3 LED light heads grommet mounted. Locate side facing lights: [#LOC]. | $2,810 |

| Item No. | Description | |
|---|---|---|
| 5550-0135 | Whelen Super LED lower level warning light package with clear lenses. Includes (6) red 600 LED light heads (2) red/clear 600 split LED light heads (side facing forward position) and (2) red 500 LED light heads w/chrome flanges. Locate side facing lights: [#LOC]. | $3,624 |
| 5550-0148 | Whelen M6 Super LED lower level warning light package. Includes (6) red M6RC LED light heads with clear lenses and chrome flanges (4) split red/clear M6D light heads with clear lenses and chrome flanges. See specifications for locations of split lights. Locate side facing lights: [#LOC]. | $3,753 |
| 5550-0149 | Whelen M6 Super LED lower level warning light package. Includes (10) red M6R LED light heads w/chrome flanges. Locate side facing lights: [#LOC]. | $3,702 |
| 5550-0152 | Federal Signal QuadraFlare LED lower level warning light package. Includes (8) QL64XF-R red LED light heads with bezels and (2) forward facing QL64SFC-RC split red/clear LED light heads with bezels. Locate side facing lights: [#LOC]. | $2,709 |
| 5550-0154 | Whelen M6 Super LED lower level warning light package. Includes (1) red M6RC LED light head with clear lens and chrome flange (1) blue M6BC with clear lens and chrome flange and (8) split red/clear M6D light heads with clear lenses and chrome flanges. Locate side facing lights: [#LOC]. | $4,018 |
| 5550-0155 | Whelen Super LED lower level warning light package with clear lenses. Includes (8) 600 LED light heads (6 red2 blue; (1) forward and (1) rearward facing officer side) and (2) red 500 LED light heads w/chrome flanges. Locate side facing lights: [#LOC]. | $2,950 |
| 5550-0159 | Whelen M6 Super LED lower level warning light package. Includes (6) M6RC red LED light heads with clear lenses (2) M9RC red LED light heads with clear lenses and (2) red 500 Super LED light heads w/chrome flanges and clear lenses. Locate side facing lights: [#LOC]. | $4,223 |
| 5550-0163 | Whelen M6 Super LED lower level warning light package. Includes (8) red/blue M6J LED light heads and (2) red/blue 500 Super LED light heads w/chrome flanges and clear lenses. Locate side facing lights: at forward most position in rear wheelwell offset to front and side facing at rear of body in rubrail if equipped. | $3,655 |
| 5550-0164 | Whelen 600 series Super LED lower level warning light package. Includes (10) red LED light heads w/clear lenses and chrome flanges. Locate side facing lights: [#LOC]. | $3,122 |
| 5550-0169 | Federal Signal QuadraFlare LED lower level warning light package. Includes (10) QL64XF-B blue LED light heads with bezels. Locate side facing lights: [#LOC]. | $2,611 |
| 5550-0170 | Whelen Super LED lower level warning light package. Includes (8) 600 Series (4) red & (4) blue (2) 400 Series (1) red & (1) blue and chrome flanges alternating in colors. Locate side facing lights: at forward most position in rear wheelwell offset to front and on tailboard mounted light box above rear tailboard. Lights will alternate color from light to light. All lights will have clear lenses with colored LEDs. | $3,122 |
| 5550-0171 | Whelen Super LED lower level warning light package. Includes (4) red 600 LED light heads (4) blue 600 LED light heads (1) red 500 LED light head and (1) blue 500 LED light head. Lights to be driver side red officer side blue; see specification. Locate side facing lights: [#LOC]. | $2,950 |
| 5550-0173 | Whelen M6 Super LED lower level warning light package. Includes (8) red M6R LED light heads and (2) red M2R LED light heads. Locate side facing lights: [#LOC]. | $3,286 |
| 5550-0178 | Whelen Super LED lower level warning light package with clear lens. Includes (8) red 600 LED light heads and (2) red 500 LED light heads w/chrome flanges. Locate side facing lights: [#LOC]. | $2,950 |
| 5550-0180 | Whelen M6 Super LED lower level warning light package. Includes (10) red M6 LED light heads w/clear lenses and chrome flanges. Locate side facing lights: [#LOC]. | $3,702 |
| 5550-0181 | Whelen Super LED lower level warning light package with clear lenses. Includes (8) red/clear M6 split LED light heads and (2) split red/clear M2 LED light heads w/chrome flanges. State of Maryland only. Locate side facing lights: [#LOC]. | $4,053 |
| 5550-0183 | Whelen M6 Super LED lower level warning light package. Includes (8) red M6R LED light heads and (2) red TIR3 LED light heads. Locate side facing lights: [#LOC]. | $3,286 |
| 5550-0188 | Whelen M6 Super LED lower level warning light package. Includes (6) red M6R and (4) blue M6B LED light heads w/chrome flanges. See specifications for color locations. Locate side facing lights: [#LOC]. | $3,702 |
| 5550-0189 | Whelen Super LED lower level warning light package. Includes (7) red 600 LED light heads (1) blue 600 LED light heads and (2) red 500 LED light heads. Locate side facing lights: [#LOC]. | $2,950 |
| 5550-0190 | Federal Signal QuadraFlare LED lower level warning light package. Includes (5) QL64XF-R LED light heads with bezels and (5) QL64XF-B LED light heads with bezels. Lights to alternate red/blue around unit; see specificaton. Locate side facing lights: [#LOC]. | $2,611 |
| 5550-0191 | Weldon Diamondback V46/V79 LED lower level warning light package. Includes (8) red V46 LED light heads w/clear lenses and (2) red V79 LED light heads w/clear lenses. Locate side facing lights: [#LOC]. | $3,721 |
| 5550-0192 | Federal Signal QuadraFlare LED lower level warning light package. Includes (8) QL64XF-R LED light heads with bezels and (2) IMPAXX LED model IPX302-4 light heads. Locate side facing lights: [#LOC]. | $2,340 |
| 5550-0193 | Federal Signal QuadraFlare LED lower level warning light package. Includes (6) QL64XF-R LED light heads with bezels and (4) IMPAXX LED model IPX302-4 light heads. Locate side facing lights: [#LOC]. | $2,172 |

| Item No. | Description | |
|---|---|---|
| 5550-0194 | Federal Signal QuadraFlare LED lower level warning light package. Includes (4) QL64XF-R LED light heads (4) QL64XF-B LED light heads (1) IMPAXX LED model IPX302-3 light head and (1) IMPAXX LED model IPX302-4 light head. Lights to alternate red/blue around unit; see specification. Locate side facing lights: [#LOC]. | $2,383 |
| 5550-0197 | Weldon Diamondback LED lower level warning light package. Includes (4) red V46 LED light heads w/clear lenses (4) red V79 LED light heads w/clear lenses and (2) red V26 LED light heads w/clear lenses. Locate side facing lights: [#LOC]. | $4,165 |
| 5550-0208 | Federal Signal QuadraFlare LED lower level warning light package. Includes (4) QL64XF-R LED light heads with bezels (chrome) and (8) IMPAXX LED model IPX302-4 light heads with bezels (chrome). Locate side facing lights: [#LOC]. | $2,541 |
| 5550-0210 | Federal Signal QuadraFlare LED lower level warning light package. Includes (8) Quadraflare light heads (7) QL64XF-R (red) LED lights and (1) QL64XF-B (blue) LED light with bezels and (2) IMPAXX LED model IPX302-4 light heads. Locate side facing lights: [#LOC]. | $2,340 |
| 5550-0211 | Whelen Super LED lower level warning light package with clear lenses. Includes (8) 600 LED light heads (4 red driver's side 4 blue officer's side) and (2) 500 LED light heads (1 red driver's side 1 blue officer's side)w/chrome flanges. Locate side facing lights: [#LOC]. | $2,950 |
| 5550-0212 | Whelen 900 series Super LED upper level rear panel warning light package. Includes (2) Whelen 900 Super LED lights with clear lens. (1) red model 90RRF5CR driver's side and (1) blue model 90BBF5CR officer's side. Includes weatherproof connectors. Located upper rear corners. | $1,151 |
| 5550-0213 | Whelen Super LED lower level warning light package. Includes (6) red 600 LED light heads (2) red LIN3 lights and (2) red 500 LED light heads w/chrome flanges and clear lenses. Locate side facing lights: [#LOC]. | $2,950 |
| 5550-0214 | Whelen Super LED lower level warning light package with clear lens. Includes (7) red 600 LED light heads (1) blue 600 LED light heads and (2) red 500 LED light heads. Locate side facing lights: [#LOC]. | $2,950 |
| 5550-0215 | Whelen 900 series Super LED upper level side warning light package with clear lens. Includes (2) red Whelen 900 Super LED lights. Includes weatherproof connectors. Located (1) on the driver and (1) on the officer side upper rear body panels. | $1,151 |
| 5550-0216 | Whelen 900 series Super LED upper level rear panel warning light package with clear lens. Includes (1) red (1) blue Whelen 900 Super LEDs lights. Includes weatherproof connectors. Located (1) red on driver and (1) blue on officer upper rear corners. | $1,151 |
| 5550-0220 | Federal Signal QuadraFlare LED lower level warning light package. Includes (6) QL64XF-R LED light heads with bezels and (4) IMPAXX LED model IPX602-R light heads. Locate side facing lights: [#LOC]. | $2,610 |
| 5550-0223 | Whelen 900 series Super LED upper level side warning light package. Includes (2) red Whelen 900 Super LED model 90RRF5RR lights. Includes weatherproof connectors. Located (1) on the driver and (1) on the officer side upper forward side corners. | $1,151 |
| 5550-0225 | Whelen M6 Super LED lower level warning light package. Includes (8) red M6RC LED light heads with clear lens and (2) red M2RC LED light heads with clear lens. Locate side facing lights: [#LOC]. | $3,286 |
| 5550-0227 | Whelen M6/M7/600/IONWR Super LED lower level warning light package. Includes (2) red M6R LED light heads (4) split red/clear M7D light heads (2) 600 Series Super LED light heads Red with clear lenses and (2) red IONWR LED light heads. See specification for location of split lights. Locate side facing lights: [#LOC]. | $3,875 |
| 5550-0229 | Federal Signal QuadraFlare LED lower level warning light package. Includes (4) QL64XF-R LED light heads with bezels and (6) IMPAXX LED model IPX302-4 light heads. Locate side facing lights: [#LOC]. | $2,172 |
| 5550-0233 | Whelen Super LED lower level warning light package. Includes (6) red 600 LED light heads (2) red LIN3 lights and (2) red 500 LED light heads w/chrome flanges. Locate side facing lights: [#LOC]. | $2,950 |
| 5550-0234 | Whelen M6RC Super LED lower level warning light package. Includes (8) red M6RC LED light heads and (2) red 500 Super LED light heads w/chrome flanges and clear lenses. Locate side facing lights: [#LOC]. | $3,286 |
| 5550-0236 | Whelen M6 Super LED lower level warning light package. Includes (6) red M6R LED light heads (2) blue M6B LED light heads (1 officer front and 1 officer rear facing) and (2) red M2R LED light heads. Locate side facing lights: [#LOC]. | $3,286 |
| 5550-0238 | Federal Signal QuadraFlare LED lower level warning light package. Includes (3) QL64XF-R LED light heads (3) QL64XF-B LED light heads (2) IMPAXX LED model IPX302-3 light head and (2) IMPAXX LED model IPX302-4 light head. Lights to alternate red/blue around unit; see specification. Locate side facing lights: [#LOC]. | $2,383 |
| 5550-0240 | Whelen Super LED lower level warning light package. Includes (8) red 600 LED light heads and (2) red 500 LED light heads w/chrome flanges. Locate side facing lights: [#LOC]. | $2,950 |
| 5550-0241 | Whelen M6 Super LED lower level warning light package. Includes (6) M6R red LED light heads (2) M9R red LED light heads and (2) red M2R red Super LED light heads. Locate side facing lights: [#LOC]. | $4,223 |

| Item No. | Description | |
|---|---|---|
| 5550-0242 | Whelen Super LED lower level warning light package. Includes (8) 600 LED light heads (6) Red/Blue (2) Red /White with clear lenses and (2) red 500 LED light heads with clear lenses and chrome flanges. Locate side facing lights: [#LOC]. | $3,335 |
| 5550-0244 | (Do not use. Will not meet NFPA requirements)Whelen M6 Super LED lower level warning light package. Includes (8) split red/clear M6D LED light heads and (2) red TIR3 LED light heads. Locate side facing lights: [#LOC]. | $3,479 |
| 5550-0245 | Whelen Super LED lower level warning light package. Includes (4) red 600 LED light heads (4) blue 600 LED light heads (1) red 500 LED light head and (1) blue 500 LED light head all with clear lenses. Lights to be driver side blue officer side red; see specification. Locate side facing lights: [#LOC]. | $2,950 |
| 5550-0248 | Federal Signal QuadraFlare LED lower level warning light package with clear lenses. Includes (8) QL64XFC-R LED light heads with bezels and (2) IMPAXX LED model IPX300-4 light heads. Locate side facing lights: [#LOC]. | $2,340 |
| 5550-0249 | Whelen M6 Super LED lower level warning light package. Includes (5) red M6R LED light heads (2) M6J split red/blue LED light heads (1) blue M6B LED light head (officer front) and (2) red M2R LED light heads. Locate side facing lights: [#LOC]. | $3,722 |
| 5550-0250 | Whelen Super LED lower level warning light package. Includes (4) red 600 LED light heads (4) red LIN3 lights and (2) red 500 LED light heads w/chrome flanges. Locate side facing lights: [#LOC]. | $2,541 |
| 5550-0251 | Whelen 600 series Super LED lower level warning light package. Includes (10) LED light heads w/chrome flanges. (5) Red (5) blue alternating. Locate side facing lights: [#LOC]. | $3,122 |
| 5550-0252 | Whelen 600 series Super LED lower level warning light package. Includes (8) red LED light heads with clear lenses and (2) split red/blue LED light heads with clear lenses. Locate side facing lights: [#LOC]. | $3,177 |
| 5550-0254 | Whelen M6 Super LED lower level warning light package. Includes (4) red M6RC LED light heads with clear lenses and chrome flanges (4) split red/clear M6D light heads with clear lenses and chrome flanges and (2) red M2RC LED light heads. See specifications for locations of split lights. Locate side facing lights: [#LOC]. | $3,726 |
| 5550-0255 | Whelen 900 series Super LED upper level rear panel warning light package with clear lens. Includes (2) red Whelen 900 Super LEDs lights model 90RR5FCR. Includes weatherproof connectors. Located Rear of body (1) driver and (1) officer upper rear corners. | $1,151 |
| 5550-0256 | Federal Signal QuadraFlare LED upper level rear warning light package. Includes (2) QL97XF (1) blue and (1) red LED light heads with bezels. Located (1) blue on the driver and (1) red on the officer side of upper rear corners. | $909 |
| 5550-0257 | Whelen M6 Super LED lower level warning light package. Includes (10) red/blue M6J LED light heads w/chrome flanges and clear lenses. Locate side facing lights: [#LOC]. | $3,655 |
| 5550-0258 | Whelen M6 Super LED lower level warning light package. Includes (4) red M6R LED light heads (4) blue M6B LED light heads (1) red M2R LED light head and (1) blue M2B LED light head. Driver side red officer side blue. Locate side facing lights: [#LOC]. | $3,286 |
| 5550-0260 | Federal Signal QuadraFlare LED lower level warning light package. Includes (4) QL64XF-R LED light heads (4) QL64XF-B LED light heads (1) IMPAXX LED model IPX302-3 light head and (1) IMPAXX LED model IPX302-4 light head. Lights to alternate red/blue around unit; see specification. Locate side facing lights: [#LOC]. | $2,383 |
| 5550-0261 | Whelen M6 Super LED lower level warning light package. Includes (10) M6RC red LED with clear lens light heads w/chrome flanges. Locate side facing lights: [#LOC]. | $3,702 |
| 5550-0262 | Whelen M6 Super LED lower level warning light package. Includes (10) blue M6B LED light heads w/chrome flanges. Locate side facing lights: [#LOC]. | $3,702 |
| 5550-0264 | Power Arc LED 4/2/2/2 red/white/blue/yellow lower level warning light package. Includes (4) P14SM (2) M90DHL (1-WR 1-BW) (2)M90FK and (2) LED210. See specifications for exact locations and colors. Locate side facing lights: [#LOC]. | $5,912 |
| 5550-0265 | Whelen M6 Super LED lower level warning light package. Includes (4) red M6R LED light heads (4) blue M6B LED light heads (1) red M2R LED light head and (1) blue M2B LED light head. Alternate red/blue around unit. Locate side facing lights: [#LOC]. | $3,286 |
| 5550-0266 | Federal Signal QuadraFlare LED lower level warning light package. Includes (6) QL64XF-R LED light heads with bezels (2) QL64SFC-WR and (2) IMPAXX LED model IPX302-4 light heads. Locate side facing lights: [#LOC]. | $2,992 |
| 5550-0267 | Whelen Super LED lower level warning light package. Includes (8) red 600 LED light heads and (2) red 500 LED light heads w/chrome flanges. Locate side facing lights: [#LOC]. | $2,950 |
| 5550-0269 | Federal Signal QuadraFlare LED lower level warning light package. Includes (5) QL64XF-R LED light heads with bezels (3) QL64XF-B LED light heads with bezels and (2) QL64XF-A LED light heads with bezels. Lights to located as per specificaton. Locate side facing lights: [#LOC]. | $2,611 |
| 5550-0270 | Federal Signal Impaxx LED lower level body warning light package. Includes (6) Impaxx LED light heads with bezels located (1) each side below the forward body compartment (offset forward) (1) each side below the rearward body compartments (offset rearward) and (1) each side on rear of body down low below the taillights (offset outboard). | $657 |

| Item No. | Description | |
|---|---|---|
| 5550-0271 | Whelen Super LED lower level body warning light package. Includes (6) LIN3 light heads located (1) each side below the forward body compartment (offset forward) (1) each side below the rearward body compartments (offset rearward) and (1) each side on rear of body down low below the taillights (offset outboard). | $574 |
| 5550-0274 | Federal Signal QuadraFlare LED lower level warning light package. Includes (7) QL64XF-R LED light heads (1) QL64XF-G light head and (2) IMPAXX LED model IPX302-4 light heads. Locate side facing lights: [#LOC]. | $2,617 |
| 5550-0275 | Whelen M6 Super LED lower level warning light package. Includes (6) red M6R LED light heads and (4) red M2R LED light heads. Locate side facing lights: [#LOC]. | $3,130 |
| 5550-0276 | Code3 LED 6/2/2 lower level warning light package. Includes (8) model 65 red LED and (2) LXEX1F red LED lights all with clear lenses. Includes chrome bezels where applicable. Locate side facing lights: [#LOC]. | $3,288 |
| 5550-0277 | Federal Signal QuadraFlare LED lower level warning light package with clear lenses. Includes (8) QL64XFC-R red LED light heads with bezels and (2) IMPAXX LED model IPX600-B blue light heads. Locate side facing lights: [#LOC]. | $2,404 |
| 5550-0278 | Federal Signal QuadraFlare LED lower level warning light package. Includes (7) QL64XF-R LED (1) QL64XF-B LED light head with bezel (driver rear facing) and (2) IMPAXX LED model IPX302-4 light heads. Locate side facing lights: at forward most position centered in rear wheel well and side facing at rear of body in rubrail if equipped. | $2,340 |
| 5550-0279 | Federal Signal QuadraFlare LED lower level warning light package. Includes (6) QL64XF-R LED light heads with bezels and (4) IMPAXX LED model IPX302-4 light heads. Locate side facing lights: [#LOC]. | $2,172 |
| 5550-0280 | Federal Signal QuadraFlare LED lower level warning light package. Includes (8) QL64XF-B LED light heads with bezels and (2) IMPAXX LED model IPX302-3 light heads. Locate side facing lights: [#LOC]. | $2,340 |
| 5550-0281 | Whelen M6 Super LED lower level warning light package. Includes (6) red M6R LED light heads (2) red 600 LED light heads and (2) red TIR3 LED light heads. Locate side facing lights: [#LOC]. | $3,139 |
| 5550-0282 | Whelen M6 Super LED lower level warning light package. Includes (8) red M6R and (2) blue M6B LED light heads w/chrome flanges. See specifications for color locations. Locate side facing lights: [#LOC]. | $3,702 |
| 5550-0283 | Code3 LED 8/2 red/blue lower level warning light package. Includes (8) model 65 LED and (2) LXEX1F LED lights. See specification for exact locations. Includes chrome bezels where applicable. Locate side facing lights: [#LOC]. | $3,288 |
| 5550-0285 | Whelen M6 Super LED lower level warning light package. Includes (7) red M6R LED light heads (1) green M6G and (2) red M2R LED light heads. Locate side facing lights: [#LOC]. | $3,338 |
| 5550-0286 | Federal Signal QuadraFlare LED lower level warning light package with clear lenses. Includes (6) QL64SFC-RR LED light heads with bezels (2) QL64SFC-WR and (2) IMPAXX LED model IPX300-4 light heads. See specification for exact locations. Locate side facing lights: [#LOC]. | $3,103 |
| 5550-0287 | Whelen Super LED lower level warning light package. Includes (6) red M6R LED light heads (2) red 600 LED light heads and (2) red M2R LED light heads. Locate side facing lights: [#LOC]. | $3,286 |
| 5550-0288 | Whelen Super LED lower level warning light package. Includes (6) 600 LED light heads; (3) red/(3) blue (2) 900 LED light heads; (1) red/(1) blue and (2) 500 LED light heads; (1) red/(1) blue w/chrome flanges. See specifications for exact locations of lights. Locate side facing lights: [#LOC]. | $3,101 |
| 5550-0289 | Whelen M6/M7/M2/M9 Super LED lower level warning light package with clear lenses. Includes (2) red M6RC LED light heads (4) red M7RC light heads (2) red M2RC LED light heads and (2) red M9RC LED light heads. See specification for exact locations lights. Locate side facing lights: [#LOC]. | $3,842 |
| 5550-0290 | Whelen M6 Super LED lower level warning light package. Includes (6) red M6RC LED light heads (2) split red/amber M6K light heads and (2) red M2RC LED light heads. Locate side facing lights: [#LOC]. | $3,629 |
| 5550-0291 | Whelen Super LED lower level warning light package. Includes (6) red M6RC LED light heads with clear lenses (2) red 600 LED light heads with clear lenses and (2) red M2RC LED light heads with clear lenses. Locate side facing lights: [#LOC]. | $3,286 |
| 5550-0292 | Whelen M6 Super LED lower level warning light package. Includes (8) red M6RC LED light heads with clear lens and (2) red TIR3 LED light heads. Locate side facing lights: [#LOC]. | $3,204 |
| 5550-0293 | Whelen Super LED lower level warning light package with clear lenses. Includes (8) red 600 LED light heads and (2) red TIR3 LED light heads grommet mounted. Locate side facing lights: [#LOC]. | $2,810 |
| 5550-0295 | Whelen M6 Super LED lower level warning light package. Includes (6) red M6RC LED light heads (2) red 6RBRC Rota-Beam LED and (2) red M2RC LED light heads with clear lenses. Locate side facing lights: [#LOC]. | $3,885 |
| 5550-0297 | Whelen M series Super LED lower level warning light package. Includes (4) M6R red LED light heads (4) M9 (2 red 2 amber) LED light heads and (2) red M2R red Super LED light heads. Locate side facing lights: [#LOC]. | $4,185 |

| Item No. | Description | |
|---|---|---|
| 5550-0298 | Whelen M6 Super LED lower level warning light package. Includes (6) M6RC red LED light heads (2) M9 (1 red 1 blue) LED light heads w/clear lenses and (2) red M2RC red Super LED light heads. Locate side facing lights: [#LOC]. | $4,223 |
| 5550-0299 | Whelen M6 Super LED lower level warning light package. Includes (7) red M6R and (3) blue M6B LED light heads w/chrome flanges. See specifications for color locations. Locate side facing lights: [#LOC]. | $3,702 |
| 5550-0300 | Federal Signal QuadraFlare LED lower level warning light package. Includes (4) QL64XF-R LED light heads with bezels and (6) IMPAXX LED model IPX302-4 light heads with bezels. Locate side facing lights: [#LOC]. | $2,172 |
| 5550-0301 | Whelen LED lower level warning light package with clear lenses. Includes (4) 600 Super LED red light heads with bezels and (6) LIN3 LED red light heads with bezels. Locate side facing lights: [#LOC]. | $2,420 |
| 5550-0302 | Federal Signal QuadraFlare LED lower level cab warning light package. Includes (4) QL64XF-R LED light heads with bezels. | $1,117 |
| 5550-0303 | Whelen LED lower level cab warning light package with clear lenses. Includes (4) 600 Super LED red light heads with bezels. | $1,315 |
| 5550-0304 | Whelen M6 Super LED lower level warning light package. Includes (8) red M6R LED light heads and (2) red PSR00FRR Super LED light heads w/chrome flanges. Locate side facing lights: [#LOC]. | $3,286 |
| 5550-0305 | Federal Signal QuadraFlare LED lower level warning light package. Includes (6) QL64XF-R LED light heads with bezels (2) QL64SFC-WR and (2) IMPAXX LED model IPX302-4 light heads. Locate side facing lights: [#LOC]. | $2,992 |
| 5550-0306 | Whelen Super LED lower level warning light package. Includes (8) red 600 LED light heads and (2) red 500 LED light heads w/black flanges. Locate side facing lights: [#LOC]. | $2,950 |
| 5550-0307 | Whelen M6 Super LED lower level warning light package. Includes (8) red M6RC LED light heads with clear lens and (and (2) red TIR3 LED light heads grommet mounted with clear lenses. Locate side facing lights: [#LOC]. | $3,286 |
| 5550-0310 | Whelen M6 Super LED lower level warning light package. Includes (6) M6RC red LED light heads (2) M9RC red LED light heads (rear facing) and (2) red M2RC red Super LED light heads. Locate side facing lights: [#LOC]. | $4,223 |
| 5550-0311 | Whelen M6 Super LED lower level warning light package with clear lenses. Includes (7) red M6RC LED light heads (1) blue M6BC light head and (2) blue M2BC LED light heads. Locate side facing lights: [#LOC]. | $3,286 |
| 5550-0312 | Whelen M6 Super LED lower level warning light package. Includes (4) M6RC red LED light heads (2) M9RC red LED light heads and (4) red M2RC red Super LED light heads. Locate side facing lights: [#LOC]. | $4,160 |
| 5550-0313 | Whelen Super LED lower level warning light package with clear lenses. Includes (8) 600 LED light heads (1 red 7 blue) and (2) blue 500 LED light heads w/chrome flanges. Locate side facing lights: [#LOC]. | $2,950 |
| 5550-0314 | Whelen Super LED lower level warning light package with clear lens. Includes (5) red 600 LED light heads (3) blue 600 LED light heads and (2) red 500 LED light heads. Locate side facing lights: [#LOC]. | $2,950 |
| 5550-0315 | Power Arc LED 4/4/2 lower level warning light package. Includes 210LED-1B frt dr side 210LED-2R frt off side 210LED-2R rr dr side 210LED-1B rr off side and (4) P14SM; (2) red (2) blue. Locate side facing lights: [#LOC]. | $4,412 |
| 5550-0316 | Whelen M6 Super LED lower level warning light package. Includes (8) red M6RC LED light heads with clear lens and (2) red PSR00FRR LED light heads. Locate side facing lights: [#LOC]. | $3,286 |
| 5550-0317 | Whelen M6 Super LED lower level warning light package with clear lenses. Includes (4) M6V2 (2 red 2 blue) LED light heads (4) M6 (2 red 2 blue) LED light heads and (2) TIR3 (1 red 1 blue) LED light heads. See specifications for exact locations. Locate side facing lights: [#LOC]. | $4,913 |
| 5550-0318 | Whelen Super LED lower level warning light package. Includes (6) red 600 LED light heads (2) red M6V2R LED light heads and (2) red 500 LED light heads w/chrome flanges. Locate side facing lights: [#LOC]. | $3,899 |
| 5550-0319 | Whelen Super LED lower level warning light package with clear lenses. Includes (4) 600 LED light heads (2-red 2-blue) (4) 600 split LED light heads (2-red/clear 2-red/blue) and (2) 500 split red/blue TIR6 LED light heads w/chrome flanges. Locate side facing lights: [#LOC]. | $3,963 |
| 5550-0321 | Federal Signal QuadraFlare LED lower level warning light package. Includes (2) QL64XF-R red LED light heads (4) QL64SFC-RC split red/clear LED light heads (2) QL64XF-B LED (rear facing) light heads and (2) IMPAXX LED model IPX302-4 light heads. Locate side facing lights: [#LOC]. | $2,705 |
| 5550-0322 | Power Arc LED 4/2/2/2 red/white/blue/yellow lower level warning light package. Includes (2)P14SM (2)M90DHL(1-WR 1-BW) (2)M90FK (2)LED210 and (2)PP2-R. See specifications for exact locations and colors. Locate side facing lights: [#LOC]. | $5,912 |
| 5550-0324 | Whelen 600 series Super LED lower level warning light package. Includes (5) driver red LED light heads w/chrome flanges and (5) officer blue LED light heads w/chrome flanges. Locate side facing lights: [#LOC]. | $3,122 |

| Item No. | Description | |
|---|---|---|
| 5550-0325 | Whelen M6 Super LED lower level warning light package. Includes (4) red M6R LED light heads (4) red 6RBR Rota-Beam LED and (2) red 5V1R LED light heads. Locate side facing lights: [#LOC]. | $4,492 |
| 5550-0326 | Whelen M6 Super LED lower level warning light package. Includes (6) red M6R LED light heads (2) split red/clear M6D LED light heads and (2) red TIR3 LED light heads. Locate side facing lights: [#LOC]. | $3,186 |
| 5550-0328 | Whelen M6 Super LED lower level warning light package with clear lenses. Includes (6) red M6RC LED light heads (2) blue M6BC LED light heads (1 officer front and 1 officer rear facing) and (2) red TIR3 LED light heads. Locate side facing lights: [#LOC]. | $3,286 |
| 5550-0329 | Whelen Super LED lower level warning light package. Includes (6) red M6R LED light heads (2) blue M6B LED light heads and (2) red TIR6 series Super LED light heads w/chrome flanges. Locate side facing lights: [#LOC]. | $3,702 |
| 5550-0331 | Whelen Super LED lower level warning light package with clear lenses. Includes (8) red 600 LED light heads and (2) WIOND split red/clear LED light heads grommet mounted. Locate side facing lights: [#LOC]. | $2,912 |
| 5550-0332 | Federal Signal QuadraFlare LED lower level warning light package. Includes (7) QL64XF-R (red) LED lights and (1) QL64XF-B (blue) LED light with bezels and (2) IMPAXX LED model IPX302-4 light heads. Locate side facing lights: [#LOC]. | $2,340 |
| 5550-0334 | Whelen Super LED 4/2/2/2 lower level warning light package with clear lenses. Includes (4) M6RC red (2) M9D split red/clear (2) M7RC red and (2) M2RC red LED light heads w/weatherproof connectors. See specification for exact light locations. Locate side facing lights: [#LOC]. | $3,711 |
| 5550-0335 | Whelen M6 Super LED lower level warning light package. Includes (4) red M6RC LED light heads (2) split red/clear M6D light heads (2) red 6RBRC Rota-Beam LED and (2) red M2RC LED light heads with clear lenses. Locate side facing lights: [#LOC]. | $3,932 |
| 5550-0336 | Whelen M6 Super LED lower level warning light package with clear lenses. Includes (7) red M6RC LED light heads (1) green M6GC and (2) red M2R CLED light heads. Locate side facing lights: [#LOC]. | $3,338 |
| 5550-0337 | Federal Signal QuadraFlare LED lower level warning light package with clear lenses. Includes (7) QL64SFC-RR LED light heads with bezels (1) QL64SFC-GR and (2) Viper EXT LED model VPX800-4 light heads. See specification for exact locations. Locate side facing lights: [#LOC]. | $3,103 |
| 5550-0339 | Whelen M6 Super LED lower level warning light package. Includes (6) M6RC red LED light heads (2) M9RC red LED light heads (side facing) and (2) red M2RC red Super LED light heads. Locate side facing lights: [#LOC]. | $4,223 |
| 5550-0340 | Whelen Super LED lower level warning light package with clear lenses. Includes (4) red 600 LED light heads (4) blue 600 LED light heads (1) red 500 LED light head and (1) blue 500 LED light head. LIghts to alternate red/blue around unit; see specification. Locate side facing lights: [#LOC]. | $2,950 |
| 5550-0341 | Whelen M6 Super LED lower level warning light package with clear lenses. Includes (4) red M6V2RC LED light heads (4) red M6RC LED light heads and (2) red M2RC LED light heads. Locate side facing lights: [#LOC]. | $5,100 |
| 5550-0342 | Federal Signal QuadraFlare LED lower level warning light package. Includes (4) QL64XF-R LED light heads (4) QL64XF-B LED light heads (1) IMPAXX LED model IPX302-3 light head and (1) IMPAXX LED model IPX302-4 light head. Driver red officer blue. Locate side facing lights: [#LOC]. | $2,383 |
| 5550-0343 | Federal Signal QuadraFlare LED lower level warning light package with clear lenses. Includes (8) QL64XFC-R LED light heads with bezels and (2) IMPAXX LED model IPX300-4 light heads. Locate side facing lights: [#LOC]. | $2,340 |
| 5550-0344 | Whelen M6 Super LED lower level warning light package. Includes (6) red M6R LED light heads and (4) red 6RBR Rota-Beam LED light heads. Locate side facing lights: [#LOC]. | $4,251 |
| 5550-0345 | Federal Signal QuadraFlare LED lower level warning light package. Includes (6) QL64XF-R LED light heads with bezels and (4) IMPAXX LED model IPX602-R light heads. Locate side facing lights: [#LOC]. | $2,610 |
| 5550-0346 | Whelen 600 Super LED lower level warning light package. Includes (6) red 600 LED light heads (2) red 6RBR Rota-Beam LED and (2) red 500 LED light heads. Locate side facing lights: [#LOC]. | $3,589 |
| 5550-0348 | Federal Signal QuadraFlare LED lower level warning light package. Includes (4) QL64XFC-R LED light heads with bezels (2) QL64SFC-RC LED light heads with bezels and (4) IMPAXX LED model IPX300-4 light heads. See specification for detail of lighting locations. Locate side facing lights: [#LOC]. | $2,525 |
| 5550-0349 | Whelen M6 Super LED lower level warning light package with clear lenses. Includes (2) red M6V2RC LED light heads (4) red M6RC LED light heads (2) split red/clear M6D LED light heads and (2) red M2RC LED light heads. Locate side facing lights: [#LOC]. | $4,332 |
| 5550-0350 | Whelen M6 Super LED lower level warning light package. Includes (4) red M6RC LED light heads with clear lenses and chrome flanges (2) split red/clear M6D light heads with clear lenses (2) split red/clear M7D light heads with clear lense and chrome flanges and (2) red M2RC LED light heads. See specifications for locations of split lights. Locate side facing lights: [#LOC]. | $3,726 |

| Item No. | Description | |
|---|---|---|
| 5550-0351 | Whelen M6 Super LED lower level warning light package with clear lenses. Includes (2) red M6V2RC LED light heads (4) red M6RC LED light heads (2) split red/clear M6D LED light heads and (2) red M2RC LED light heads. Locate side facing lights: [#LOC]. | $4,332 |
| 5550-0352 | Whelen Super LED lower level warning light package with clear lenses. Includes (8) 600 LED light heads (6 red2 blue; (1) forward and (1) rearward facing driver side) and (2) blue 500 LED light heads w/chrome flanges. Locate side facing lights: [#LOC]. | $2,950 |
| 5550-0353 | Whelen M6 Super LED lower level warning light package. Includes (6) M6RC LED light heads (2) M6V2RC LED light heads and (2) TIR3 LED light heads w/chrome flanges. Locate side facing lights: [#LOC]. | $4,116 |
| 5550-0354 | Whelen M Series Super LED lower level warning light package. Includes (8) red M6RC LED light heads and (2) red M2RC LED light heads with clear lenses. Locate side facing lights: [#LOC]. | $3,286 |
| 5550-0355 | Federal Signal Impaxx LED lower level warning light package. Includes (10) Impaxx LED light heads with bezels located (1) each side of hood area (1) each side forward facing mounted in grill area (1) each side below the forward body compartment (offset rearward) (1) each side below the rearward body compartments (offset rearward) and (1) each side on rear of body down low below the taillights (offset outboard). | $1,925 |
| 5550-0357 | Code3 Prizm II model 468R red LED lower level warning light package with chrome bezels (as applicable). Includes (10) LED lights. Locate side facing lights: [#LOC]. | $3,029 |
| 5550-0358 | Code3 Prizm II model 468CR red LED lower level warning light package with chrome bezels (as applicable) and clear lenses. Includes (10) LED lights. Locate side facing lights: [#LOC]. | $3,029 |
| 5550-0359 | Code3 Prizm II 8/2 red LED lower level warning light package. Includes (8) model 468R red LED and (2) model LXEX1F-R red LED. Locate side facing lights: [#LOC]. | $2,970 |
| 5550-0360 | Code3 Prizm II 8/2 red LED lower level warning light package with clear lenses. Includes (8) model 468CR red LED and (2) model LXEX1F-R red LED. Locate side facing lights: [#LOC]. | $2,970 |
| 5550-0363 | Whelen Super LED lower level warning light package with clear lenses. Includes (4) red 600 LED light heads (4) blue 600 LED light heads (1) red 500 LED light head and (1) blue 500 LED light head. LIghts to alternate red/blue around unit; see specification. Locate side facing lights: [#LOC]. | $2,950 |
| 5550-0364 | Whelen 600 series Super LED lower level warning light package with clear lenses. Includes (5) red LED light heads w/chrome flanges and (5) blue LED light heads w/chrome flanges. LIghts to alternate red/blue around unit; see specification. Locate side facing lights: [#LOC]. | $3,122 |
| 5550-0365 | Federal Signal QuadraFlare LED lower level warning light package with clear lenses. Includes (6) QL64XFC-R LED light heads with bezels and (4) IMPAXX LED model IPX300-4 light heads. Locate side facing lights: [#LOC]. | $2,172 |
| 5550-0366 | Federal Signal QuadraFlare LED lower level warning light package with clear lenses. Includes (4) QL64XFC-R LED light heads (4) QL64XFC-B LED light heads (1) IMPAXX LED model IPX300-3 light head and (1) IMPAXX LED model IPX300-4 light head. Lights to alternate red/blue around unit; see specification. Locate side facing lights: [#LOC]. | $2,383 |
| 5550-0369 | Whelen Super LED lower level warning light package. Includes (8) 600 LED light heads (6 red2 blue rear facing) and (2) red 500 LED light heads w/chrome flanges. Locate side facing lights: [#LOC]. | $2,950 |
| 5550-0370 | Whelen M6 Super LED lower level warning light package. Includes (6) red M6RC LED light heads with clear lenses and chrome flanges (2) split red/clear M6D light heads with clear lenses and chrome flanges and (2) M2RC red light heads with clear lenses. See specifications for location of split lights. Locate side facing lights: [#LOC]. | $3,600 |
| 5550-0371 | Whelen M6 Super LED lower level warning light package. Includes (6) red M6RC LED light heads with clear lenses and chrome flanges (2) split red/clear M6D light heads with clear lenses and chrome flanges and (2) WIONR red light heads with clear lenses. See specifications for location of split lights. Locate side facing lights: [#LOC]. | $3,600 |
| 5550-0372 | Whelen Super LED lower level warning light package. Includes (8) 600 LED light heads (7 red1 blue rear facing driver side) and (2) red 500 LED light heads w/chrome flanges. Locate side facing lights: [#LOC]. | $2,950 |
| 5550-0373 | Federal Signal QuadraFlare LED lower level warning light package with clear lenses. Includes (8) QL64XFC-R LED light heads with bezels and (2) IMPAXX LED model IPX300-4 light heads. Locate side facing lights: [#LOC]. | $2,340 |
| 5550-0375 | Whelen M6 Super LED lower level warning light package. Includes (8) red M6RC LED light heads with clear lens and (2) red WIONR LED light heads. Locate side facing lights: [#LOC]. | $3,468 |
| 5550-0377 | Whelen 600 series Super LED lower level warning light package with clear lenses. Includes (9) red LED light heads w/chrome flanges and (1) blue LED light head w/chrome flange. Locate side facing lights: [#LOC]l. | $3,122 |
| 5550-0378 | Whelen M6 Super LED lower level warning light package with clear lenses. Includes (6) red M6RC LED light heads (2) split red/clear M6D LED light heads and (2) red TIR3 LED light heads. Locate side facing lights: [#LOC]. | $3,186 |
| 5550-0379 | Whelen Super LED lower level warning light package with clear lenses. Includes (6) red/clear M6 split LED light heads (2) red M6 LED light heads and (2) split red/clear Micron LED light heads w/chrome flanges. Locate side facing lights: [#LOC]. | $4,053 |

| Item No. | Description | |
|---|---|---|
| 5550-0380 | Whelen M series Super LED lower level warning light package. Includes (4) red 600 Super LED light heads (4) red M6V2R LED light heads and (2) red M2R LED light heads. Locate side facing lights: [#LOC]. | $4,795 |
| 5550-0381 | Whelen M6 Super LED lower level warning light package. Includes (4) red M6V2R LED light heads (4) red M6R LED light heads and (2) red M2R LED light heads. Locate side facing lights: [#LOC]. | $5,100 |
| 5550-0382 | Whelen M6 Super LED lower level warning light package. Includes (6) red M6RC LED light heads with clear lenses (2) red 600 LED light heads with clear lenses and (2) WIOND split red/clear light heads with clear lenses grommet mounted. Locate side facing lights: [#LOC]. | $3,600 |
| 5550-0383 | Whelen M6 Super LED lower level warning light package. Includes (4) red M6V2R LED light heads (4) red M6R LED light heads and (2) red M2R LED light heads. Locate side facing lights: [#LOC]. | $5,100 |
| 5550-0384 | Whelen M6 Super LED lower level warning light package. Includes (4) red M6V2R LED light heads (4) red M6R LED light heads and (2) red 5V1R LED light heads. Locate side facing lights: [#LOC]. | $5,377 |
| 5550-0385 | Federal Signal QuadraFlare LED lower level warning light package. Includes (6) QL64XF-R LED light heads with bezels (2) QL97XF-R and (2) IMPAXX LED model IPX302-4 light heads. Locate side facing lights: [#LOC]. | $2,992 |
| 5550-0386 | Whelen M6 Super LED lower level warning light package. Includes (2) red M6V2R LED light heads (4) split red/clear M6D LED light heads with clear lenses (2) red M6R LED light heads and (2) red M2R LED light heads. See specifications for exact locations. Locate side facing lights: [#LOC]. | $4,391 |
| 5550-0387 | Whelen Super LED lower level warning light package. Includes (4) red 600 LED light heads (4) red 6RBR Rota-Beam LED and (2) red TIR6 LED light heads. Locate side facing lights: [#LOC]. | $4,046 |
| 5550-0388 | Whelen M6 Super LED lower level warning light package. Includes (6) red M6V2R LED light heads and (4) red M6R LED light heads. Locate side facing lights: [#LOC]. | $6,113 |
| 5550-0389 | Whelen M6 Super LED lower level warning light package. Includes (2) red M6V2R LED light heads (6) red M6R LED light heads and (2) red M2R LED light heads. Locate side facing lights: [#LOC]. | $4,116 |
| 5550-0390 | Federal Signal QuadraFlare LED lower level warning light package. Includes (8) QL64XF-R LED light heads with bezels and (2) Micro Pulse model MPS1200U-RR LED light heads. Locate side facing lights: [#LOC]. | $2,430 |
| 5550-0391 | Whelen M6 Super LED lower level warning light package. Includes (5) red M6R LED light heads (3) blue M6B light heads and (2) red M2R LED light heads. See specifications for exact locations. Locate side facing lights: [#LOC]. | $3,286 |
| 5550-0394 | Whelen M6 Super LED lower level warning light package. Includes (8) red M6RC LED light heads and (2) red 6RBRC Rota-Beam LED with clear lenses. Locate side facing lights: [#LOC]. | $3,933 |
| 5550-0395 | Whelen M6 Super LED lower level warning light package. Includes (4) split red/blue M6J LED light heads (2) red M6RC LED light heads (2) blue M6BC LED light head and (2) red M2RC LED light heads with clear lenses. See specifications for exact locations of lighting. Locate side facing lights: [#LOC]. | $3,784 |
| 5550-0396 | Whelen M6 Super LED lower level warning light package. Includes (7) red M6R LED light heads (1) blue M6B light head and (2) blue M2B LED light heads. Locate side facing lights: [#LOC]. | $3,286 |
| 5550-0397 | Power Arc LED 4/2/2 red/white/blue lower level warning light package with clear lenses. Includes (2) MP13-BW (2) M90DHL (1-WR 1-BW) and (4) M90 (3 red 1 blue). See specifications for exact locations and colors. Locate side facing lights: at forward most position and centered in rear wheel well. | $5,008 |
| 5550-0398 | Federal Signal QuadraFlare LED lower level warning light package. Includes (8) QL64XF-R LED light heads (1) QL64XF-B LED light head and (1) QL64XF-A LED light head with bezels. Locate side facing lights: [#LOC]. | $2,611 |
| 5550-0399 | Whelen M6 Super LED lower level warning light package with clear lenses. Includes (6) red M6V2RC LED light heads (2) red M6RC LED light heads and (2) red M2RC LED light heads. Locate side facing lights: [#LOC]. | $5,587 |
| 5550-0400 | Whelen Super LED lower level warning light package with clear lenses. Includes (8) red/blue 600 split LED light heads and (2) red/blue 500 split LED light heads w/chrome flanges. Locate side facing lights: [#LOC]. | $3,709 |
| 5600-0002 | Warning light Whelen 600 series strobe (PR) [#COL]. Requires power pack or option with spare power pack outlets. Includes weatherproof connectors. Requires engineering approval for NFPA applications. Location(s): [#LOC] | $466 |
| 5600-0005 | Warning light Whelen 700 series strobe (PR) [#COL]. Requires power pack or option with spare power pack outlets. Includes weatherproof connectors. Requires engineering approval for NFPA applications. Location(s): [#LOC] | $460 |
| 5600-0008 | Warning light Whelen 900 series strobe (PR) [#COL]. Requires power pack or option with spare power pack outlets. Includes weatherproof connectors. Requires engineering approval for NFPA applications. Location(s): [#LOC] | $466 |
| 5600-0011 | Whelen power supply model UPS64LX 4Place 75Watt strobe. | $600 |
| 5600-0012 | Whelen power supply model ISP148 eight (8) place 140watt strobe. | $1,405 |
| 5600-0013 | Whelen power supply model ISP188 eight (8) place 180watt strobe. | $1,503 |
| 5600-0016 | Warning light Whelen 500 series LED (PR) amber. Location: [#LOC] Surface mounted with weatherproof connector. Requires engineering approval for NFPA applications. | $456 |

| Item No. | Description | |
|---|---|---|
| 5600-0017 | Warning light Whelen 500 series LED (PR) red. Surface mounted with weatherproof connector. Location: [#LOC] | $456 |
| 5600-0018 | Warning light Whelen 500 series LED (PR) blue. Location: [#LOC] Surface mounted with weatherproof connector. Requires engineering approval for NFPA applications. | $784 |
| 5600-0020 | Warning light Whelen 600 series LED (PR) amber. Location: [#LOC] Surface mounted with weatherproof connector. Requires engineering approval for NFPA applications. | $812 |
| 5600-0021 | Warning light Whelen 600 series LED (PR) red. Surface mounted with weatherproof connector. Location: [#LOC] | $812 |
| 5600-0022 | Warning light Whelen 700 series LED (PR) red. Surface mounted with weatherproof connector. Location: [#LOC] | $710 |
| 5600-0023 | Warning light Whelen 900 series LED (PR) amber. Location: [#LOC] Surface mounted with weatherproof connector. Requires engineering approval for NFPA applications. | $1,469 |
| 5600-0024 | Warning light Whelen 900 series LED (PR) red. Surface mounted with weatherproof connector. Location: [#LOC] | $1,469 |
| 5600-0025 | Warning light Whelen 600 series halogen (PR) [#COL]. Includes weatherproof connectors. Requires engineering approval for NFPA applications. Location(s): [#LOC] | $376 |
| 5600-0029 | Code3 Model 550 rotating (PR) with [#COL] domes. Location: [#LOC]. | $402 |
| 5600-0030 | Code3 Model #550/#41. Includes (2) #550's with red domes and (2) #41 lights with [#COL] lenses. Total four (4) lights at rear upper. Location of Model 550 lights: [#LOC]. | $1,035 |
| 5600-0031 | Code 3 / PSE Oscilaser warning light (PR). Lights are to be located on front of cab in the inboard position of the quad bezel. | $624 |
| 5600-0033 | Whelen beacon with halogen rotator and 700 series strobe (PR) Model B6R with red domes and [#COL] strobes. Location [#LOC]. Requires power pack. | $889 |
| 5600-0034 | Federal model SY12FS Sentry (PR) with [#COL] domes. Location: [#LOC]. | $403 |
| 5600-0036 | Federal model IVP100 Vector pod (PR) with [#COL] domes. Location: [#LOC]. | $480 |
| 5600-0038 | Federal Model IVP200F Vector pod warning light (PR) with [#COL] filters. Location: [#LOC]. | $522 |
| 5600-0041 | Warning light Federal Signal GS2 strobe (PR) [#COL]. Requires power pack or option w/spare power pack outlets. Requires engineering approval for NFPA applications. Location(s): [#LOC]. | $448 |
| 5600-0046 | Warning light Federal Signal GH1F halogen (PR) [#COL]. Location(s): [#LOC] | $337 |
| 5600-0048 | Warning light Federal Signal GL5 LED (PR) red. Location: [#LOC] | $664 |
| 5600-0049 | Warning light Federal Signal GS5 strobe (PR) [#COL]. Requires power pack or option w/spare power pack outlets. Requires engineering approval for NFPA applications. Location(s): [#LOC] | $410 |
| 5600-0051 | Warning light Federal Signal GL5 LED (PR) amber. Location: [#LOC]. | $685 |
| 5600-0052 | Federal Signal SPS4-NFPA (4) place 90 watt strobe power supply. Required when using Federal Signal strobes. | $595 |
| 5600-0053 | Federal Signal SPS8-NFPA (8) place 192 watt strobe power supply. Required when using Federal Signal strobes. | $1,059 |
| 5600-0061 | Mars 888 pedestal mounted traffic clearing light on front of cab centered below windshield. Lens color: clear. | $984 |
| 5600-0062 | Warning light Roto Ray 200 with red lenses. N/A on commercial chassis. Locate on front of cab centered below windshield. | $1,699 |
| 5600-0063 | Warning light Roto Ray 200 with (2) red and (1) clear lenses. N/A on commercial chassis. Locate on front of cab centered below windshield. | $1,699 |
| 5600-0067 | Federal Signal Model #100 beacon (PR) with [#COL] domes. Location: [#LOC]. | $514 |
| 5600-0074 | Opticom Emitter 3M #792H. Emitter and control only. Wire through parking brake. Location: [#LOC]. | $3,144 |
| 5600-0075 | Opticom Emitter 3M #592 Chrome. Emitter and dash control only. Wire through parking brake. Location: [#LOC]. | $3,735 |
| 5600-0078 | Whelen Super LED beacon (PR) model L31H with [#COL] domes. Location [#LOC]. | $1,942 |
| 5600-0079 | Whelen beacon with halogen rotator and 700 series LED (PR) Model B6TM with red domes and [#COL] LEDs. Location [#LOC]. | $1,471 |
| 5600-0080 | Whelen beacon with LED upper beacon and 700 series Super LED (PR) model B6LED with red domes and [#COL] LEDs. Location: [#LOC]. | $2,975 |
| 5600-0081 | Code 3 / PSE Oscilaser warning light clear (PR). Lights are to be located on front of cab above quad bezels. | $654 |
| 5600-0083 | Warning light Code3 LXEX1F-R LED (PR). Surfaced mounted with clear lens. Location: [#LOC] | $740 |
| 5600-0085 | Tomar strobe preemption emitter with chrome housing. Includes pedestal mount and switch accessible to driver. Wire through parking brake. Location: [#LOC]. | $1,535 |
| 5600-0086 | Whelen beacon model RB6T (PR) with [#COL] domes. Location: [#LOC]. | $418 |
| 5600-0087 | Warning light Code 3 65BZA LED (PR) amber. Surface mounted with bezel. Location: [#LOC] | $598 |
| 5600-0088 | Warning light Code 3 65BZR LED (PR) Red. Surface mounted with bezel. Location: [#LOC] | $598 |
| 5600-0089 | Warning Light Code3 model #65BZRW split red/clear LED with chrome bezel (PR). Location: [#LOC]. | $784 |
| 5600-0090 | Warning light Federal Signal QuadraFlare QL64XF LED (PR) red. Surface mounted with bezel. Location: [#LOC]. | $632 |
| 5600-0092 | Opticom Emitter 3M #792HF. Emitter with filter and control only. Wire through parking brake. Location: [#LOC]. | $3,144 |

| Item No. | Description | |
|---|---|---|
| 5600-0093 | Whelen beacon with halogen rotator and 700 series scene (PR) Model B6TH*Z1P. Dome color: [#COL]. Location [#LOC]. | $1,240 |
| 5600-0094 | Warning light Federal Signal QL64XF LED (PR) amber. Surface mounted with bezel. Location: [#LOC]. | $632 |
| 5600-0098 | Warning light Whelen 600 series Super LED (PR) amber. Location: [#LOC]. | $629 |
| 5600-0099 | Warning light Whelen 600 series Super LED (PR) red. Location: [#LOC]. | $629 |
| 5600-0100 | Warning light Whelen 600 series Super LED (PR) blue with clear lens. Location: [#LOC]. | $629 |
| 5600-0101 | Whelen beacon with halogen rotator and 700 series LED (PR) Model B6TM with amber dome on driver side red dome officer side and [#COL] LEDs. Location [#LOC]. | $1,471 |
| 5600-0105 | Hazard (door ajar) light 2" LED. Location: [#LOC]. | $37 |
| 5600-0106 | Warning light Roto Ray LED with (2) red and (1) clear lights. Locate on front of cab centered below windshield. | $2,886 |
| 5600-0108 | Light Code 3 model 2118-NFPA-2 (PR). Located one each side on rear upper of body. | $1,900 |
| 5600-0109 | Warning light Whelen 500 series LED (4) red. Surface mounted with weatherproof connector. Flashing lights wired through door ajar. Location: One on each of the interior cab doors (outboard position). | $908 |
| 5600-0111 | Warning light Whelen 600 series Super LED (PR) white with clear lens. Location: [#LOC]. | $711 |
| 5600-0112 | Warning light Whelen 600 series LED (PR) blue. Surface mounted. Location: [#LOC] | $933 |
| 5600-0113 | Code 3 Optix 3 LED lights. Locate (1) each side at rear mounted to upper rear warning light brackets. Lights to be amber and switched with the upper rear warning lights. | $659 |
| 5600-0114 | Tomar RECT-79S (4) two red two blue and one 780-1228-WP power supply. Includes RECT-79-SMFP chrome bezels. Lights to be located one each side at rear above tail lights (drv side blue ofc side red) and one each side at rear up high (drv side red ofc side blue). Lights to flash in an "X" pattern. | $2,227 |
| 5600-0115 | Tomar RECT-46 LED (PR) one red one blue. Includes Tomar 930DM-LED-LB flasher and RECT-46LBZ chrome bezels. Locate up high on rear of body just below compartment top (drv side red ofc side blue). Lights to flash in an "X" pattern with the lower level warning lights. | $1,035 |
| 5600-0117 | Whelen Ultra Freedom Micro Edge LED (PR) model MCFLED25 clear lens with red LEDs. Location [#LOC]. | $2,020 |
| 5600-0118 | Warning light Whelen 500 series TIR6 Super LED (PR) red. Surface mounted 5TSMAC bezel with weatherproof connector. Location: [#LOC]. | $531 |
| 5600-0122 | Light Code 3 model 2122NFPA1 (PR) 22.5" long. Red LED with clear lens. Location: one each side on rear body compartment top. | $4,020 |
| 5600-0123 | Warning light Code 3 LXEX2F-AA LED (PR) amber. Surface mounted with bezel. Location: (1) each side rear compartment face up high | $805 |
| 5600-0124 | Warning light Code 3 LXEX1F-R LED (PR) red. Surface mounted with bezel. Location: [#LOC] | $732 |
| 5600-0125 | Code3 model 780 LED flasher. Flasher will control lower level warning lights ipo multiplexing | $1,711 |
| 5600-0126 | Body Whelen strobe power supply located in R1 on rear wall just below offset. | $126 |
| 5600-0128 | Warning light Whelen 600 series split Super LED (PR) red/amber. Location: [#LOC] | $814 |
| 5600-0129 | Warning light Whelen 600 series split Super LED (PR) red/clear. Location: [#LOC]. | $876 |
| 5600-0130 | Whelen model UFM8 LED flasher (PR). Flashers will control lower level warning lights ipo internal flashers. Locate (1) in cab and (1) in body. | $1,158 |
| 5600-0131 | Light Whelen model PSR00FRR LED (PR) red. Location: [#LOC]. | $400 |
| 5600-0132 | Warning light Federal Signal QL64XF LED (PR). (1) red and (1) green. Location: Red driver and green officer in front quad inboard of NFPA warning light | $842 |
| 5600-0133 | Warning light Whelen 900 series Super LED model 90RR5FRR (PR) red. Location: [#LOC]. | $1,235 |
| 5600-0134 | Warning light Whelen 600 series LED red/clear. Surface mounted with weatherproof connector(PR). Location: [#LOC] | $816 |
| 5600-0136 | Federal MicroEscape LED beacon (PR) with [#COL] lenses. Location: [#LOC]. Requires additional upper level warning or Signal Master. | $2,108 |
| 5600-0137 | Warning light Whelen 700 series Super LED (PR) red/clear. Surface mounted with weatherproof connector. Location: [#LOC] | $827 |
| 5600-0138 | Warning light Whelen LIN3 series Super LED (PR) red with clear lens. Surface mounted RFLANGCD bezel with weatherproof connector. Location: [#LOC] | $396 |
| 5600-0139 | Whelen beacon with LED upper beacon and 700 series Super LED (PR) model B6LED with red LEDs/clear domes and [#COL] LEDs/clear lenses. Location: [#LOC]. | $2,975 |
| 5600-0140 | Warning light circuit wiring through chassis reverse. All warning lights. | $81 |
| 5600-0142 | Warning light Whelen 900 series Super LED model 90RA5FCR (PR) split red (bottom) / amber (top) with clear lenses. Location: [#LOC] | $1,235 |
| 5600-0143 | Warning lights Whelen 600 series Super LED (PR) red w/clear lens. Location: [#LOC]. | $629 |
| 5600-0144 | Warning light Whelen 500 series TIR6 Super LED (PR) blue. Surface mounted 5TSMAC bezel with weatherproof connector. Location: [#LOC] | $531 |
| 5600-0147 | Warning light Whelen 600 series LED (PR). Red driver blue officer surface mounted with weatherproof connector. Location: [#LOC] | $873 |

| Item No. | Description | |
|---|---|---|
| 5600-0151 | Whelen Ultra Freedom Micro Edge LED (PR) (1) driver Model MCFLED25 clear lense with red LEDs and (1) officer MCFLED22 clear lense with blue LEDs. Requires addtional upper level warning lights to meet NFPA. Location: [#LOC]. | $2,164 |
| 5600-0152 | Warning light Whelen 500 series LED (PR) green. Includes switch on pump panel labeled "Ready for Water" Location: (1) centered between grille and windshield on slope (1) driver side (inside of beavertail if so equipped) up high below hosebed opposite officer discharge. | $810 |
| 5600-0153 | Warning light Whelen 600 series split Super LED (PR) red/blue driver red/amber officer. Location: [#LOC]. | $814 |
| 5600-0154 | Warning light Whelen 600 series Super LED (PR). Red driver blue officer surface mounted with weatherproof connector. Location: [#LOC]. | $629 |
| 5600-0156 | Warning light Federal Signal QL64XF LED (PR) green. Surface mounted with bezel. Location: [#LOC]. | $695 |
| 5600-0157 | Federal Model SY12FS Sentry with green dome. Includes switch on driver overhead. Location: pole mounted center rear cab roof. | $408 |
| 5600-0160 | Warning light Federal Signal QL97XF LED (PR) red. Surface mounted with bezel (if applicable). Location: [#LOC]. | $909 |
| 5600-0161 | Warning light Federal Signal QL97XF LED (PR) amber. Surface mounted with bezel (if applicable). Location: [#LOC] | $909 |
| 5600-0162 | Warning light Federal Signal QL64XF LED (PR) blue. Surface mounted with bezel. Location: [#LOC]. | $632 |
| 5600-0164 | Warning light Federal Signal QL64XF LED (PR) white. Surface mounted with bezel. Location: [#LOC]. | $731 |
| 5600-0165 | Warning light Whelen 500 series Super Linear LED (PR) green. Location: [#LOC]. | $560 |
| 5600-0166 | Warning light Whelen 600 series Super LED (PR) green. Location: [#LOC]. | $828 |
| 5600-0168 | Fed QuadraFlare QL97SC-RA Red/Amber split color LED lights located on rear of body up high. Red on top on left side and bottom on right side to simulate "X" pattern. Includes external flasher. | $1,136 |
| 5600-0169 | Warning light Whelen 900 series Super LED driver side amber / officer side red model 90AA5FAR / 90RR5FRR. Location: [#LOC]. | $1,235 |
| 5600-0172 | Warning light Whelen 900 series Super LED model 90AA5FAR (PR) amber. Location: [#LOC]. | $1,235 |
| 5600-0173 | Federal MicroEscape NFPA compliant LED beacons (PR) clear lenses with [#COL] LED reflectors. Location: [#LOC]. | $1,574 |
| 5600-0174 | Warning light Whelen 900 series Super LED model 90RR5FRR (2) (PR) red. Location: (1) each side rear compartment face up high and (1) each side mounted to the side body towards rear. All wired as part of upper rear warning lights. | $2,539 |
| 5600-0176 | Mars 888 pedestal mounted traffic clearing lights with clear lenses located one each side of cab above outer quad bezel. | $1,965 |
| 5600-0177 | Whelen model UFM8 LED flasher (3). Flashers will control warning lights ipo internal flashers. Locate (1) in cab and (2) in body. | $1,736 |
| 5600-0181 | Warning light Federal Signal Model 360501 LED w/ bezel (PR). Surfaced mounted with blue driver and red officer lenses. Location: [#LOC]. | $584 |
| 5600-0182 | Whelen beacon with LED upper beacon and 700 series Super LED (PR) Model B6LED with amber domes and [#COL] LEDs. Location [#LOC] | $2,975 |
| 5600-0183 | Warning light Whelen 600 series Super LED (PR). blue driver green officer surface mounted with weatherproof connector. Location: [#LOC]. | $730 |
| 5600-0184 | Warning light Federal Signal QL64XF LED (PR). (1) red driver (1) blue officer. Surface mounted with bezel. Location: [#LOC] | $632 |
| 5600-0185 | Federal Model IVP100 Vector pod (PR) located at the rear cab corners. Driver side to be amber with switch on driver's switch panel and automatically turn off when warning lts are on. Officer side to be blue with switch on driver's switch panel. | $803 |
| 5600-0187 | Warning light Federal Signal QL97XF LED (PR). (1) red driver (1) blue officer. Surface mounted with bezel (if applicable). Location: [#LOC]. | $909 |
| 5600-0189 | Federal Intelli model 650205 LED flasher (PR). Flashers will control lower level warning lights ipo internal flashers. Locate (1) in cab and (1) in body. | $918 |
| 5600-0190 | Warning light Whelen 600 series Super LED (PR). Blue driver amber officer surface mounted with weatherproof connector. Location: [#LOC]. | $629 |
| 5600-0191 | Whelen beacon with LED upper beacon and 700 series Super LED (PR) Model B6LED with amber driver and red officer domes and [#COL] LEDs. Location [#LOC]. | $2,975 |
| 5600-0193 | Warning light Weldon Diamondback V46W-C00R LED (PR) red w/ clear lenses. Location: [#LOC]. | $596 |
| 5600-0194 | Whelen Super LED beacon Model L11H with amber dome. Includes switch in cab accessible to the driver. Location: center of rear cab roof. | $860 |
| 5600-0195 | Code3 model XP9501NFPA1 (PR) red LED with clear domes. Location: [#LOC]. | $2,136 |
| 5600-0196 | Fed QuadraFlare QL64SC-RC Red/White split color LED lights in ptd smooth plt alum box above the grille. Red on top on left side and bottom on right side to simulate "X" pattern. Wired to lower zone lighting and switched off with parking brake. Includes ext flasher. | $1,679 |
| 5600-0197 | Warning light Whelen 600 series Super LED (PR). red driver green officer surface mounted with weatherproof connector. Location: [#LOC]. | $730 |

| Item No. | Description | |
|---|---|---|
| 5600-0198 | Whelen PE215 emitter. Emitter and control only. Wire through parking brake. Location: [#LOC]. | $904 |
| 5600-0199 | Whelen beacon with LED upper beacon and 700 series Super LED (PR) Model B6LED with red driver and blue officer domes and [#COL] LEDs. Location [#LOC]. | $2,975 |
| 5600-0200 | Whelen beacon with LED upper beacon and 700 series Super LED (PR) Model B6LED with red driver and amber officer domes and [#COL] LEDs. Location [#LOC]. | $2,975 |
| 5600-0201 | Warning light Whelen 900 series Super LED model 90RB5FCR (PR) split red / blue with clear lense. Location: [#LOC]. | $1,235 |
| 5600-0202 | Warning light Weldon Diamondback V46W-C00R LED (PR) red w/ clear lenses. Includes diamond plate mounting box. Location: [#LOC]. | $961 |
| 5600-0205 | Warning light Federal Signal GL1F-B LED (PR) blue. Location: [#LOC]. | $598 |
| 5600-0206 | Whelen Micro 400 Super LED (PR) model MC40ED3. Driver side red with red lenses officer side red side facing with red lenses side and forward; amber rear facing with amber lens. Location [#LOC]. | $2,582 |
| 5600-0213 | Whelen beacon with halogen rotator and 700 series LED (PR) Model B6TM with red dome on driver side amber dome officer side and [#COL] LEDs. Location [#LOC]. | $1,471 |
| 5600-0215 | Power Arc (PR) Model LED210 yellow with clear lenses. Location: [#LOC]. | $1,303 |
| 5600-0216 | Warning light Whelen M9 series Super LED (PR) red. Location: [#LOC]. | $1,423 |
| 5600-0217 | Power Arc (PR) Model LED210 red with clear lenses. Location: [#LOC]. | $1,303 |
| 5600-0222 | Whelen Super LED beacon Model L31H pole mounted with green dome. Includes switch in officer overhead labeled "Command". Location: center of cab roof to rear of lightbar. | $967 |
| 5600-0223 | Warning light Code 3 378ABZ LED (PR) amber. Surface mounted with bezel. Location: [#LOC]. | $711 |
| 5600-0226 | Warning light Federal Signal Model 360501-04 LED w/ bezel (PR). Surfaced mounted with red lens. Location: [#LOC]. | $418 |
| 5600-0227 | Warning light Whelen 600 series Super LED (PR). Red driver blue officer surface mounted with clear lenses and weatherproof connector. Location: [#LOC]. | $629 |
| 5600-0228 | Warning light Whelen 900 series Super LED (PR) with clear lenses. (1) model 90RR5FCR red driver and (1) model 90BB5FCR blue officer. Each light shall have a clear lense w/ colored LEDs. Location: [#LOC]. | $1,235 |
| 5600-0230 | Warning light Whelen 600 series Super LED (PR) blue with blue lens. Location: [#LOC]. | $629 |
| 5600-0231 | Warning light Whelen 600 series Super LED (EA) red. Location: below scene light on driver rear compt face. | $316 |
| 5600-0234 | Warning light Whelen Dominator series LED model D844000 red driver/blue officer with clear lenses. Location: [#LOC]. Wire through lower level warning. | $946 |
| 5600-0236 | Whelen beacon with LED upper beacon and 700 series Super LED (PR) model B6LED with blue driver and red officer domes and [#COL] LEDs. Location: [#LOC]. | $2,975 |
| 5600-0238 | Warning light Whelen 600 series Super LED (PR). (1) red steady burn front driver side below windshield and (1) flashing amber driver side above tail lights to meet California DOT requirements. | $629 |
| 5600-0240 | Warning light Whelen M4R LED (4) red. Surface mounted with weatherproof connector. Flashing lights wired through door ajar. Location: One on each of the interior cab doors (outboard position). | $1,244 |
| 5600-0241 | Warning light Whelen M6R series Linear Super LED (PR) red. Location: [#LOC]. | $718 |
| 5600-0242 | Warning light Whelen M6 series Linear Super LED (PR) split red/amber with clear lens. Location: [#LOC]. | $787 |
| 5600-0243 | Warning light Whelen 500 series split TIR6 Super LED (PR) red/amber. Surface mounted 5TSMAC bezel with weatherproof connector. Location: [#LOC]. | $608 |
| 5600-0244 | Whelen Micro 400 Super LED (PR) model MC40ED3. Driver side red with clear lenses officer side red side facing with clear lenses side and forward; amber rear facing with clear lens. Location [#LOC]. | $2,582 |
| 5600-0245 | Warning light Federal Signal QL64XF LED (PR) red with clear lens. Surface mounted with bezel. Location: [#LOC] | $632 |
| 5600-0248 | Warning light Whelen M9 series Super LED (PR) red driver blue officer with clear lenses. Location: [#LOC]. | $1,423 |
| 5600-0249 | Warning light Whelen M6 series Linear Super LED (PR) red driver blue officer with clear lenses. Location: [#LOC]. | $718 |
| 5600-0250 | Whelen beacon with LED upper beacon and 700 series Super LED (PR) Model B6LED with red LED/clear dome driver and blue LED/clear dome officer and [#COL] LEDs/clear lenses. Location: [#LOC]. | $2,975 |
| 5600-0251 | 3m Opticom GPS vehicle system kit. Includes antenna radio and control unit. Wired through park brake. | $8,655 |
| 5600-0252 | Hazard (door ajar) light Federal Signal Fire Bolt strobe. Location: [#LOC]. | $252 |
| 5600-0253 | Warning light Federal Signal QL97XF LED (PR). (1) red driver (1) amber officer. Surface mounted with bezel (if applicable). Location: [#LOC] | $909 |
| 5600-0254 | Warning light Federal Signal QL97XF LED (PR). (1) amber driver (1) red officer. Surface mounted with bezel (if applicable). Location: [#LOC] | $909 |

| Item No. | Description | |
|---|---|---|
| 5600-0255 | Warning light Whelen 900 series Super LED driver side red model (90RR5FRR) / officer side amber (90AA5FAR). Location: [#LOC] | $1,235 |
| 5600-0256 | Warning light Whelen M-Series Super LED model M9J (PR) red/blue. Surface mounted with weatherproof connector. Location: [#LOC]. | $1,423 |
| 5600-0257 | Warning light Whelen M6 series Linear Super LED (PR) split red/blue with clear lens. Location: [#LOC]. | $787 |
| 5600-0258 | Warning light Whelen M9RC series Super LED (PR) red with clear lens. Location: [#LOC]. | $1,207 |
| 5600-0259 | Warning light Whelen M6BC series Linear Super LED (PR) blue with clear lens. Location: [#LOC]. | $718 |
| 5600-0260 | Warning light Weldon Diamondback V46W-C00A LED (PR) amber w/ clear lenses. Location: [#LOC]. | $596 |
| 5600-0263 | Whelen Super LED beacon Model L31H with green dome. Includes switch on pump operator panel labeled "Command". Location: centered rear cab roof. | $967 |
| 5600-0264 | Whelen beacon with LED upper beacon and 700 series Super LED (PR) Model B6LED with blue LED/clear dome driver and red LED/clear dome officer and 700 series [#COL] LEDs/clear lenses. Location: [#LOC]. | $2,975 |
| 5600-0265 | Hazard light 2.5" incandescent additional amber. Location and function: center overhead for light tower. Wired through audible alarm if equipped. | $37 |
| 5600-0266 | Whelen Super LED beacon (PR) model L31H with red driver blue officer LED and clear domes. Location rear upper body on aerial style brackets. | $1,942 |
| 5600-0267 | Warning light Whelen Dominator series LED with red driver/blue officer with clear lenses. Location: [#LOC]. Wire through lower level warning. | $962 |
| 5600-0268 | Mars 888 pedestal mounted traffic clearing light located one each side of cab outboard above the outer quad bezel on contoured pedestal bracket. Lens color(s): driver red officer clear. | $2,343 |
| 5600-0269 | Whelen Super LED beacon (PR) model L31H with red driver amber officer LED and clear domes. Location [#LOC]. | $1,942 |
| 5600-0272 | Hazard (door ajar) light Federal Signal 2.5" LED model 607120-04. Location: [#LOC]. | $61 |
| 5600-0273 | Warning light Whelen 900 series Super LED (PR). (1) model 90RR5FCR red driver and (1) model 90BB5FCR blue officer. Each light shall have a clear lense w/ colored LEDs. Location: side facing (1) each side upper front body panels and side facing (1) each side upper rear body panels. | $1,235 |
| 5600-0274 | Warning light Whelen 900 series Super LED (PR). (1) model 90RR5FCR red driver and (1) model 90BB5FCR blue officer. Each light shall have a clear lense w/ colored LEDs. Location: Rear facing up high on the rear one above each other. | $1,235 |
| 5600-0275 | Warning light Whelen M6AC series Linear Super LED (PR) amber with clear lens. Location: [#LOC]. | $718 |
| 5600-0276 | Whelen Ultra Freedom Micro Edge LED (PR) model MCFLED clear lens with amber driver / red officer LEDs. Location [#LOC]. | $2,020 |
| 5600-0277 | Warning light Whelen M6C series Linear Super LED (PR) white. Location: [#LOC]. | $718 |
| 5600-0284 | Whelen Super LED beacon (PR) model L31H with blue driver red officer LED and clear domes. Location [#LOC]. | $1,942 |
| 5600-0285 | Warning light Roto-Ray LED with (1) red (1) blue and (1) clear lenses. Locate on front of cab centered below windshield. | $2,886 |
| 5600-0286 | Warning light Whelen M6RC series Super LED (PR) red with clear lens. Location: [#LOC]. | $686 |
| 5600-0287 | Warning light Whelen Dominator Plus model DP880000 with (8) red LINZ6 LEDs. Location: [#LOC]. Wire through lower level warning. | $1,580 |
| 5600-0288 | Whelen red TIR3 LED light heads (2). Locate in rubrails below compartments L1 and R1. | $300 |
| 5600-0289 | Warning light Whelen 900 series Super LED model 90BB5FBR (PR) blue. Location: [#LOC]. | $1,235 |
| 5600-0290 | Warning light Whelen 600 series Super LED (PR) red with diamond plate mounting boxes. Location: [#LOC]. | $808 |
| 5600-0291 | Warning light Roto Ray LED with (1) red (1) green and (1) white lights. Locate on front of cab centered below windshield. | $2,886 |
| 5600-0292 | Warning light Whelen 900 series Super LED model 90RR5FRC (PR) red w/ clear lens. Location: [#LOC]. | $1,235 |
| 5600-0293 | Light Whelen model PSC00FCR LED (PR) white. Lights are wired to reverse and respective turn signal. Location: (1) each side below L1/R1 just ahead of rear wheels in rubrail (if equipped). | $919 |
| 5600-0294 | Warning light Federal Signal IMPAXX model IPX600-R red LED w/ bezel (PR). Surfaced mounted with clear lens. Location: [#LOC]. | $486 |
| 5600-0295 | Warning lights Weldon Diamondback V79W-C10A LED amber w/ clear lenses (PR). Location: [#LOC]. | $845 |
| 5600-0296 | Warning light Weldon Diamondback V46W-C LED (PR) red driver amber officer w/ clear lenses. Location: [#LOC]. | $596 |
| 5600-0297 | Warning light Whelen Dominator series LED model D860020 red/white. Includes R/W/R/R/R/R/W/R LEDs with clear lenses. Location: [#LOC]. Wire through lower level warning. | $949 |
| 5600-0298 | Warning light Power Arc model M90FK-W LED (PR). Color: White. Location: [#LOC]. | $1,040 |
| 5600-0299 | Warning light Federal Signal IMPAXX LED model IPX302-4 w/ bezel (PR). Surfaced mounted with red lens. Location: [#LOC]. | $334 |
| 5600-0300 | Warning lights Weldon Diamondback V79W-C00R LED red w/ clear lenses (PR). Location: [#LOC]. | $845 |

| Item No. | Description | |
|---|---|---|
| 5600-0301 | Warning light Whelen M2 Super LED warning lights. Includes (2) red M2R LED light heads w/chrome flanges (if applicable). Location: [#LOC]. | $572 |
| 5600-0302 | Warning light Whelen M2 Super LED warning lights. Includes (2) red M2RC LED light heads with clear lenses and chrome flanges (if applicable). Location: [#LOC]. | $572 |
| 5600-0305 | Warning light Whelen M6 series Linear Super LED (PR) amber driver red officer with clear lenses. Location: [#LOC]. | $718 |
| 5600-0306 | Opticom Emitter 3M 794H. LED emitter and control only. Location and activation: [#LOC]. | $2,420 |
| 5600-0307 | Warning light Whelen 600 series LED (PR) with clear lens. Red driver blue officer surface mounted with weatherproof connector. Location: [#LOC] | $873 |
| 5600-0309 | Warning light Whelen Vertex Super LED warning lights. Includes (2) red model VTX609R LED light heads with clear lens w/chrome flanges model VTXFC. Location: [#LOC]. | $536 |
| 5600-0310 | Warning light Whelen M6 series Linear Super LED (PR) split red/clear with clear lens. Location: [#LOC]. | $787 |
| 5600-0311 | Warning light Whelen 900 series Super LED model 90AA5FCR (PR) amber with clear lenses. Location: [#LOC]. | $1,235 |
| 5600-0312 | Light Whelen model PSA00FAR LED (PR) amber. Location: [#LOC]. | $400 |
| 5600-0313 | Warning light Whelen 900 series Super LED with clear lens model 90BB5FCR (PR) blue. Location: [#LOC]. | $1,235 |
| 5600-0314 | Federal Signal Vision LED rotating beacons model VSLR-IPX-R1R21 with rear facing IPX6 red LED warning light (Requires additional rear facing warning lights for NFPA compliance). Location: [#LOC]. | $2,430 |
| 5600-0315 | Whelen Micro Liberty LED (PR) (1) driver Model MCSLED2R clear lense with red LEDs and (1) officer MCSLED2B clear lense with blue LEDs. Location: [#LOC]. | $1,701 |
| 5600-0316 | Warning light Whelen M4AC Super-LED lights (PR) amber with clear lenses. Location: [#LOC]. | $921 |
| 5600-0317 | Whelen Super LED beacon (PR) model L31H with red driver blue officer LED and clear domes. Location: [#LOC]. | $1,942 |
| 5600-0318 | Whelen Ultra Freedom Micro Edge LED (PR) (1) officer Model MCFLED25 clear lense with red LEDs and (1) driver MCFLED22 clear lense with blue LEDs. Requires addtional upper level warning lights to meet NFPA. Location: [#LOC]. | $2,164 |
| 5600-0320 | Warning light Whelen ION series Super LED (2) red and (1) white with clear lens. Location: [#LOC]. | $951 |
| 5600-0321 | Mars 888 pedestal mounted traffic clearing light located one each side of cab outboard above the outer quad bezel on contoured pedestal brkt. Lens color: clear. | $2,343 |
| 5600-0322 | Warning light Whelen M7D series Linear Super LED (PR) split red/clear with clear lens. Location: [#LOC]. | $797 |
| 5600-0327 | Warning light Whelen Dominator series LED model D880000 red with clear lenses. Location: [#LOC]. Wire through lower level warning. | $946 |
| 5600-0328 | Warning light Whelen M7 series Linear Super LED (PR) white light with clear lens. Location: [#LOC]. | $698 |
| 5600-0330 | Warning light Federal Signal IMPAXX model IPX602-R red LED w/ bezel (PR). Surfaced mounted with red lens. Location: [#LOC]. | $486 |
| 5600-0331 | Federal Signal Vision LED rotating beacons model VSLR-R with red LED warning light(s) and red lenses (Requires additional rear facing warning lights for NFPA compliance). Location: [#LOC]. | $1,816 |
| 5600-0332 | Mars 888 pedestal mounted traffic clearing light located (1) each side of cab outboard above the outer quad bezel on contoured pedestal bracket. Driver side red officer side clear. | $2,343 |
| 5600-0333 | Warning light Whelen M9 series Super LED (PR) red driver amber officer. Location: [#LOC]. | $1,423 |
| 5600-0334 | Warning light Whelen IONWR series Super LED red in color. Location: [#LOC]. | $654 |
| 5600-0336 | Warning light Roto Ray LED with (1) red (1) amber and (1) clear lights. Locate on front of cab centered below windshield. | $2,886 |
| 5600-0338 | Warning light Whelen M9 series Super LED (PR) red officer amber driver. Location: [#LOC]. | $1,423 |
| 5600-0339 | Warning light Whelen 600 series Super LED (PR). Red officer blue driver surface mounted with weatherproof connector. Location: [#LOC]. | $629 |
| 5600-0340 | Warning light Whelen M6 series Linear Super LED (PR) red driver blue officer. Location: [#LOC]. | $718 |
| 5600-0341 | Warning light Whelen 600 series split Super LED (PR) red/blue with clear lens. Location: [#LOC]. | $814 |
| 5600-0342 | Whelen beacon with LED upper beacon and 700 series Super LED (PR) Model B6LED with blue driver and amber officer domes and [#COL] LEDs. Location [#LOC]. | $2,975 |
| 5600-0343 | Whelen red TIR3 LED light heads (2). Locate in rubrail below pump module offset forward. | $300 |
| 5600-0345 | Warning light Federal Signal IMPAXX LED model IPX300-4 w/ bezel (PR). Surfaced mounted red LEDs with clear lens. Location: [#LOC]. | $334 |
| 5600-0347 | Warning light Whelen 900 series Super LED blue driver amber officer. Location: [#LOC]. | $1,235 |
| 5600-0350 | Hazard (door ajar) light Whelen Vertex red LED model VTX609R w/chrome bezel. Location: [#LOC]. | $270 |
| 5600-0352 | Warning light Whelen M6G series Linear Super LED (PR) green. Location: [#LOC]. | $922 |
| 5600-0354 | Warning lights Whelen LINZ6 LEDs (PR) red in color with chrome bezels if applicable. Location: [#LOC]. | $479 |
| 5600-0355 | Whelen beacon with LED upper beacon and 700 series Super LED (PR) Model B6LED with blue domes and [#COL] LEDs. Location: [#LOC]. | $2,975 |

| Item No. | Description | |
|---|---|---|
| 5600-0356 | Federal Signal Pulsator LED beacon pole mounted with green dome. Mounted on a ROM external push/pull KR-SB-500-W4-I series pole with a flat surface to accommodate beacon mounting. Includes switch in officer overhead labeled "Command". Location: driver side rear of cab. | $1,492 |
| 5600-0357 | Warning light Whelen M6 series Linear Super LED (PR) red driver green officer. Location: [#LOC]. | $718 |
| 5600-0358 | Warning light Federal Signal Viper EXT Model VPX802-4 LED w/ bezel rear upper level package. Includes (9) surfaced mounted with red lens; (5) up high rear of body and (2) side facing on each side of body up high and rearward (as applicable). | $2,560 |
| 5600-0359 | Warning light Federal Signal IMPAXX LED model IPX302 w/ bezel (PR) (driver blue officer red). Surfaced mounted with colored lens. Location: [#LOC]. | $334 |
| 5600-0360 | Warning light Federal Signal QuadraFlare QL64XF LED (EA) red. Light to be steady burn to meet California DOT requirements. Surface mounted with bezel. Location: [#LOC]. | $282 |
| 5600-0362 | Power Arc beacon (PR) Model LEDB210 with [#COL] domes. Location: [#LOC]. | $1,280 |
| 5600-0364 | Warning light Roto Ray LED with (2) green and (1) clear lights. Locate on front of cab centered below windshield. | $2,886 |
| 5600-0366 | Warning light Whelen 500 series TIR6 Super LED (2) blue and (3) amber. Surface mounted 5TSMAC bezel with weatherproof connector. Lights to activate when park brake is set in blocking mode. Location: [#LOC]. | $1,326 |
| 5600-0367 | Warning light Whelen 600 series Super LED (PR) amber with clear lens. Location: [#LOC]. | $629 |
| 5600-0368 | Warning light Whelen M6A series Linear Super LED (PR) amber. Location: [#LOC]. | $718 |
| 5600-0369 | Whelen Ultra Freedom Micro Edge LED (PR) model MCFLED2 clear lens with red driver / amber officer LEDs. Location: [#LOC]. | $2,020 |
| 5600-0370 | Warning light Whelen M-Series Super LED model M9AC (PR) amber with clear lens. Surface mounted with weatherproof connector. Location: [#LOC]. | $1,207 |
| 5600-0371 | Whelen Ultra Freedom Micro Edge LED (PR) model MCFLED2RB clear lens with (1) red/(1) blue LEDs. Location: [#LOC]. | $2,020 |
| 5600-0372 | Light Code 3 model DB2-2PZNFPA2 (PR) with clear lenses. Located: [#LOC]. | $2,027 |
| 5600-0373 | Warning Light Code3 model #65BZCB blue LED with clear lens and chrome bezel (PR). Location: [#LOC]. | $1,129 |
| 5600-0374 | Warning light Federal Signal QL64XFC LED (PR) blue with clear lenses. Surface mounted with bezel. Location: [#LOC]. | $632 |
| 5600-0375 | Warning light Federal Signal IMPAXX model IPX600-B blue LED w/ bezel (PR). Surfaced mounted with clear lens. Location: [#LOC]. | $486 |
| 5600-0377 | Federal Signal Vision LED rotating beacons model VSLR-R2A02 with rear facing IPX6 amber LED warning light. Location: [#LOC]. | $2,430 |
| 5600-0378 | Warning light Code 3 65BZCR LED (PR) Red with clear lens. Surface mounted with bezel. Location: [#LOC] | $598 |
| 5600-0379 | Warning light Federal Signal QL97XFC-R LED (PR) red with clear lenses. Surface mounted with bezel (if applicable). Location: [#LOC]. | $909 |
| 5600-0380 | Warning light Federal Signal QL64SFC split LED (PR) driver red/clear officer red/green. Surface mounted with bezel. Location: [#LOC]. | $795 |
| 5600-0381 | Hazard (seat belt warning) blue light 2" LED. Location: Adjacent to door ajar light. | $37 |
| 5600-0383 | Warning light Whelen 900 series Super LED (PR). (1) model 90RR5FRR red driver and (1) model 90BB5FBR blue officer. Location: [#LOC]. | $1,235 |
| 5600-0384 | Tomar model RECT-79-TSMF bezel (PR) for Whelen 900 series lights. Lights to be angled forward. Location: driver and officer gravel shield mounted lights. | $189 |
| 5600-0385 | Whelen Super LED ROTA-BEAM beacon (PR) model R316 Series [#COL] domes. Location [#LOC]. | $2,115 |
| 5600-0386 | Warning light Whelen M2 Super LED warning lights. Includes (2) amber M2A LED light heads w/chrome flanges (if applicable). Location: [#LOC]. | $572 |
| 5600-0387 | Whelen amber TIR3 LED light heads (2). Locate [#LOC]. | $300 |
| 5600-0388 | Hazard (light tower ajar) amber light 2" LED. Location: [#LOC]. | $37 |
| 5600-0389 | Warning light Whelen M4RC Super-LED lights (PR) red with clear lenses. Location: [#LOC]. | $550 |
| 5600-0390 | Mars 888 LED pedestal mounted traffic clearing light located one each side of cab outboard above the outer quad bezel on contoured pedestal brkt. Lens color: clear. | $3,716 |
| 5600-0391 | Warning light Whelen M4R Super-LED lights (PR) red. Location: [#LOC]. | $550 |
| 5600-0392 | Whelen Ultra Freedom Micro Edge LED (PR) model MCFLED2 clear lens with blue driver / red officer LEDs. Location (1) each side of body on rearward compartment top. | $1,968 |
| 5600-0393 | Warning light Whelen M6GC series Linear Super LED (PR) green with clear lenses. Location: [#LOC]. | $733 |
| 5600-0395 | Warning light Whelen M-Series Super LED model M9K (PR) red/amber. Surface mounted with weatherproof connector. Location: (1) on each side up high rear of body. | $1,423 |
| 5600-0396 | Warning light Whelen Dominator series LED model D66000 red with clear lenses. Location: [#LOC]. Wire through lower level warning. | $839 |
| 5600-0397 | Warning light Whelen WIONA series Super LED amber in color (ea). Locate rear of body below directional lightbar wired through reverse. | $327 |

| Item No. | Description | |
|---|---|---|
| 5600-0398 | Warning light Whelen 500 series TIR6 Super LED (PR)1-red driver 1-green officer. Surface mounted 5TSMAC bezel with weatherproof connector. Location: [#LOC]. | $531 |
| 5600-0399 | Warning light Whelen M9 series Super LED (PR) red with diamond plate mounting boxes. Location: [#LOC]. | $1,523 |
| 5600-0400 | Warning light Whelen IONWA series Super LED amber in color. Location: [#LOC]. | $654 |
| 5600-0401 | Warning light Whelen M6B series Linear Super LED (PR) blue. Location: [#LOC]. | $718 |
| 5600-0402 | Warning light Whelen M9 series Super LED (PR) blue driver red officer with clear lenses. Location: [#LOC]. | $1,423 |
| 5600-0404 | Whelen beacon with LED upper beacon and 700 series Super LED (PR) Model B6LED with amber LED/clear dome driver and red LED/clear dome officer and [#COL] LEDs/clear lenses. Location: [#LOC]. | $2,975 |
| 5600-0405 | Warning light Whelen M9 series Super LED (PR) red with (1) officer side diamond plate mounting box. Location: driver side facing uppper body corner officer rear compartment top outboard. | $1,476 |
| 5600-0406 | Warning light Whelen 500 series TIR6 Super LED (2) blue and (3) red. Surface mounted 5TSMAC bezel with weatherproof connector. Lights to activate when park brake is set in blocking mode. Location: [#LOC]. | $1,326 |
| 5600-0407 | Whelen Ultra Freedom Micro Edge LED (PR) model MCFLED red lens with red LEDs. Location [#LOC]. | $2,020 |
| 5600-0408 | Warning light Federal Signal QL97XF LED (PR) red with diamond plate mounting box. Surface mounted with bezel (if applicable). Location: [#LOC]. | $1,088 |
| 5600-0409 | Whelen beacon with LED upper beacon and 700 series Super LED (PR) model B6LED with red domes and 700 series Super LED scene lights rear facing. Location: [#LOC]. | $3,139 |
| 5600-0410 | Warning light Whelen 600 series Super LED (PR) red with black flange. Location: [#LOC]. | $629 |
| 5600-0412 | Warning light Federal Signal QL64XF LED (EA) white. Surface mounted with bezel. Location: [#LOC]. | $367 |
| 5600-0414 | Warning light Whelen 900 series Super LED (PR). (1) model 90RR5FRR red officer and (1) model 90BB5FBR blue driver. Location: [#LOC]. | $1,235 |
| 5600-0415 | Warning/Scene light Whelen M9V2R Super LED (PR) red. Location: [#LOC]. | $2,072 |
| 5600-0417 | Enclose bottom of aerial style bracket for no exposed wiring. | $97 |
| 5600-0418 | Warning light Whelen 500 series TIR6 Super LED red. Surface mounted 5TSMAC bezel with weatherproof connector. Light to be steady burn while the parking brake is disengaged. Location: Centered in front cab grill | $309 |
| 5600-0419 | Mars 888 LED pedestal mounted traffic clearing light located one each side of cab outboard above the outer quad bezel on contoured pedestal brkt. Lens color: Red. | $3,716 |
| 5600-0420 | Power Arc (PR) Model LED210 driver blue officer red. Location: [#LOC]. | $1,303 |
| 5600-0421 | Whelen beacon with Rota-Beam LED upper beacon and M7 series Super LED (PR) model B63M7 with red domes and [#COL] LEDs. Location: [#LOC]. | $3,226 |
| 5600-0422 | Warning light Whelen WIONR series Super LED red in color (PR). Locate [#LOC]. | $584 |
| 5600-0423 | Warning light Whelen Rota-Beam series model 6RBRC Super LED (PR) red with clear lenses. Location: [#LOC]. | $1,003 |
| 5600-0424 | Warning light Whelen M6 series Linear Super LED (PR) blue driver red officer with clear lenses. Location: [#LOC]. | $718 |
| 5600-0425 | Code 3 / PSE Oscilaser warning light red (PR). Lights are to be located on front of cab above quad bezels. | $654 |
| 5600-0426 | Warning/Scene light Whelen M9V2 Super LED (PR) red driver blue officer with clear lenses. Location: [#LOC]. | $2,072 |
| 5600-0427 | Warning light Whelen M9 series Super LED (PR) blue driver red officer. Location: [#LOC]. | $1,423 |
| 5600-0428 | Warning light Whelen 500 series split TIR6 Super LED (PR) red/blue. Surface mounted 5TSMAC bezel with weatherproof connector. Location: [#LOC]. | $608 |
| 5600-0429 | Warning/Scene light Whelen M9V2 Super LED (PR) red driver blue officer. Location: [#LOC]. | $2,072 |
| 5600-0430 | Whelen Rota-Beam LED lights (3) red/blue/red with clear lenses and smooth plate mounting box painted upper 2-tone job color. Location: centered below windshield. | $1,917 |
| 5600-0431 | Warning light Whelen 600 series Super LED (PR). Amber driver blue officer surface mounted with weatherproof connector and clear lenses. Location: [#LOC]. | $629 |
| 5600-0432 | Warning light Whelen 600 series Super LED (PR). Red officer blue driver surface mounted with clear lenses and weatherproof connector. Location: [#LOC]. | $629 |
| 5600-0433 | Power Arc (PR) Model LED180 blue. Location: [#LOC]. | $1,303 |
| 5600-0435 | Light Whelen PS strip LED (PR) red driver blue officer with clear lenses. Location: [#LOC]. | $559 |
| 5600-0436 | Federal Signal Sentry branch guard (PR). | $163 |
| 5600-0437 | Hazard (door ajar) light Whelen M2WR red LED w/black bezel. Location: [#LOC]. | $286 |
| 5600-0438 | Warning light Whelen 5V1R Super LED (PR) red with chrome flange (as applicable). Surface mounted with weatherproof connector. Location: [#LOC]. | $864 |
| 5600-0439 | Warning light Whelen Rota-Beam series model 6RBB Super LED (PR) blue. Location: [#LOC]. | $1,003 |
| 5600-0440 | Warning light Whelen Rota-Beam series model 6RBR Super LED (PR) red. Location: [#LOC]. | $1,003 |

| Item No. | Description | |
|---|---|---|
| 5600-0441 | Warning light Whelen 500 series TIR6 Super LED (PR) amber. Surface mounted 5TSMAC bezel with weatherproof connector. Location: [#LOC]. | $531 |
| 5600-0442 | Warning light Whelen M9RC series Super LED (PR) red with clear lens and black housing. Location: [#LOC]. | $1,207 |
| 5600-0443 | Warning/Scene light Whelen M9V2 Super LED (PR) red driver blue officer. Includes black bezels. Location: [#LOC]. | $2,072 |
| 5600-0444 | Door mounted warning light Truck-Lite amber LED (PR). Compartment L5/R5 upper and lower outboard (to alternate flash). Wired through door ajar circuit. | $244 |
| 5600-0445 | Warning light Roto Ray LED with (1) red (1) amber and (1) green lights. Locate on front of cab centered below windshield. | $2,886 |
| 5600-0446 | Warning light Whelen M2 Super LED warning lights. Includes (2) blue M2BC LED light heads (blue LEDs clear lens) w/chrome flanges (if applicable). Location: [#LOC]. | $572 |
| 5600-0447 | Whelen beacon with Rota-Beam LED upper beacon and M7 series Super LED (PR) model B63M7 with red domes/clear lenses and [#COL] LEDs. Location: [#LOC]. | $3,226 |
| 5600-0448 | Warning light Whelen Rota-Beam series model 6RB Super LED (PR) driver blue officer red. Location: [#LOC]. | $1,003 |
| 5600-0449 | Warning light Whelen WIONK series Super LED split red/amber in color (PR). Locate [#LOC]. | $584 |
| 5600-0450 | Warning light Whelen WIOND series Super LED split red/clear in color (PR). Locate [#LOC]. | $584 |
| 5600-0451 | Warning light Whelen 600 series Super LED. Four (4) red LEDs with smooth plate mounting boxes painted job color (boxes are as required dependent upon location). All four (4) lights shall be activated from a single dash mounted rocker switch. Location: One (1) pair mounted on the cab brow. One (1) pair mounted on or near the corner of the front bumper one (1) each side. | $1,764 |
| 5600-0452 | Warning light Federal Signal QL97XF LED (PR). (1) blue driver (1) red officer. Surface mounted with bezel (if applicable). Location: [#LOC]. | $909 |
| 5600-0453 | Fed QuadraFlare QL97SF-RB Red/Blue split color LED lights. Surface mounted with bezel (if applicable). Location: [#LOC]. | $1,136 |
| 5600-0454 | Warning light Whelen 900 series Super LED driver side red model (90RR5FCR) / officer side amber (90AA5FCR) with clear lenses. Location: [#LOC] | $1,235 |
| 5600-0455 | Warning light Whelen 900 series Super LED driver side amber model (90AA5FCR) / officer side red (90RR5FCR). Location: [#LOC] | $1,235 |
| 5600-0456 | Tomar Scorpion LED beacon (PR) model BCN-CR1 with clear domes. Location: [#LOC]. | $1,882 |
| 5600-0457 | Mars 888 LED pedestal mounted traffic clearing light on front of cab centered below windshield. Lens color: clear. | $1,670 |
| 5600-0458 | Warning light Whelen Vertex Super LED warning lights. Includes (2) split red/clear model VTX609D LED light heads with clear lenses and chrome flanges. Location: [#LOC]. | $536 |
| 5600-0459 | Warning light Whelen M-Series Super LED model M9K (PR) red/amber. Surface mounted with weatherproof connector. Location: [#LOC]. | $1,423 |
| 5600-0460 | Mars 888 pedestal mounted traffic clearing light located one each side of cab outboard of the outer quad bezel on contoured pedestal bracket. Lens color(s): driver red officer clear. | $2,343 |
| 5600-0461 | Warning light Whelen WIONSM series Super LED driver split red/green officer split red/amber in color (PR). Locate (1) each side rear facing centered between DOT lights and corner in rubrail if equipped. | $586 |
| 5600-0462 | Warning light Whelen M6 series Linear Super LED (PR) red driver green officer with clear lenses. Location: [#LOC]. | $718 |
| 5600-0463 | Warning light Federal Signal Viper EXT model VPX800-4 red LED w/ bezel (PR). Surfaced mounted with clear lens. Location: [#LOC]. | $570 |
| 5600-0464 | Warning light Power Arc model M90 LED (PR). Color: Red. Location: [#LOC]. | $1,040 |
| 5600-0465 | Warning light Whelen M9BC series Super LED (PR) blue with clear lens. Location: [#LOC]. | $1,207 |
| 5600-0467 | Whelen beacon with LED upper beacon and M7 series Super LED (PR) model B6LED with driver amber officer red domes and [#COL] LEDs. Location: [#LOC]. | $3,042 |
| 5600-0468 | Warning/ground light Whelen M6V2RC series Linear Super LED (PR) red with clear lenses. Location: [#LOC]. | $1,494 |
| 5600-0469 | Warning light Roto Ray LED with (2) red w/ clear lenses and (1) clear lights. Locate on front of cab centered below windshield. | $2,886 |
| 5600-0470 | Whelen beacon with Rota-Beam LED upper beacon and 700 series Super LED (PR) model B6370 with red domes and [#COL] LEDs. Location: [#LOC]. | $3,157 |
| 5600-0471 | Diamond plate shield above officer side rear beacon. | $229 |
| 5600-0472 | Federal Signal Vision LED rotating beacons model VSLR with driver red LED warning light and officer amber LED warning light. (Requires additional rear facing warning lights for NFPA compliance). Location: [#LOC]. | $1,816 |
| 5600-0473 | Warning light Whelen WIONL series Super LED split red/green in color (PR). Locate [#LOC]. | $666 |
| 5600-0475 | Warning light Whelen WIONSMCR series Super LED red. Location: [#LOC]. | $584 |
| 5600-0477 | Light Whelen model PSB00FBR LED (PR) blue. Location: [#LOC]. | $663 |
| 5600-0478 | Warning light Whelen M4D Super-LED lights (PR) red-clear split lenses. Location: [#LOC]. | $709 |

| Item No. | Description | |
|---|---|---|
| 5600-0479 | Smooth plate mounting box painted job color for use with M9 fixtures. Location(s): driver and/or officer side rear and side facing upper level warning light. | $370 |
| 5600-0480 | Warning light Whelen Dominator series LED model D63030 red/white with clear lenses. Location: [#LOC]. Wire through lower level warning. | $839 |
| 5600-0481 | Code3 Arch model A36 [#COL] LED beacon (PR). Location: [#LOC]. | $2,375 |
| 5600-0482 | Warning light Whelen WIONSMCD Super LED (3) split red/clear. Location: [#LOC]. | $951 |
| 5600-0483 | Code3 Arch model A36 [#COL] LED beacon (PR). Location: [#LOC]. | $2,375 |
| 5600-0484 | Warning light Power Arc model M90SM LED (PR). Color: [#COL] . Location: [#LOC]. | $1,136 |
| 5600-0485 | Warning light Federal Signal QL64SFC split LED (PR) red/blue. Surface mounted with bezel. Location: [#LOC]. | $629 |
| 5600-0486 | Warning light Whelen 500 series TIR6 Super LED (2) amber and (3) red. Surface mounted 5TSMAC bezel with weatherproof connector. Lights to activate when park brake is set in blocking mode. Location: rear of body below hosebed. | $1,326 |
| 5600-0487 | Warning light bezel (PR). Fabricated bezel on radius cab corner painted job color. | $405 |
| 5600-0488 | Warning/Scene light Whelen M9V2RC Super LED (PR) red with clear lenses. Location: [#LOC]. | $2,072 |
| 5600-0490 | Warning light Whelen M9RC series Super LED (PR) red with clear lenses and diamond plate mounting boxes. Location: [#LOC]. | $1,523 |
| 5600-0491 | Warning light Whelen Micron Super LED (PR) split red/clear. Surface mounted chrome bezel with weatherproof connector. Location: [#LOC]. | $564 |
| 5600-0492 | Warning light Whelen Micron Super LED (PR) split red/amber. Surface mounted chrome bezel with weatherproof connector. Location: [#LOC]. | $564 |
| 5600-0493 | Mars 888 LED pedestal mounted traffic clearing light located one each side of cab outboard above the outer quad bezel on contoured pedestal brkt. Lens color: driver red officer clear. | $3,716 |
| 5600-0494 | Whelen red TIR3 LED light heads (2). Grommet mount in running board below pump module offset forward. | $300 |
| 5600-0495 | Warning light Whelen 600 series Super LED (PR). Red driver amber officer surface mounted with weatherproof connector. Location: [#LOC]. | $629 |
| 5600-0496 | Warning light Whelen M9 series Super LED (PR) red driver blue officer. Location: [#LOC]. | $1,423 |
| 5600-0497 | Diamond plate warning/scene light mounting box full compartment top depth (PR). Location: [#LOC]. | $425 |
| 5600-0498 | Painted smooth plate warning/scene light mounting box (two-tone if equipped). Location: [#LOC]. | $425 |
| 5600-0499 | Warning/ground and/or scene light Whelen M6V2R series Linear Super LED (PR) red. Location: [#LOC]. | $1,494 |
| 5600-0500 | Warning light Whelen M6 series Super LED (PR) red/amber driver red/blue officer. Surface mounted with weatherproof connector. Location: [#LOC]. | $787 |
| 5600-0501 | Federal 10" Navigator LED beacons (PR) clear lenses with (2) red (1) red/amber LED reflectors. Location: [#LOC]. | $2,028 |
| 5600-0502 | Warning light Federal Signal Micro Pulse model MPS1200U-RR red LED w/ bezel (PR). Location: [#LOC]. | $473 |
| 5600-0503 | Light Whelen PS strip LED (PR) blue driver red officer with clear lenses. Location: [#LOC]. | $559 |
| 5600-0504 | Warning/ground light Whelen M6V2 series Linear Super LED (4); (2) red (2) amber alternating. Wired through lower level warning scene lights wired through park brake and reverse. Location: center rear of body above B1. | $2,987 |
| 5600-0505 | Hazard (park brake set) light 2" amber LED. Location: [#LOC]. | $37 |
| 5600-0506 | Warning light Whelen M9 series Super LED (PR) red officer amber driver with clear lenses. Location: [#LOC]. | $1,423 |
| 5600-0507 | Light Whelen model PSB00FCR LED (PR) blue with clear lens. Location: [#LOC]. | $663 |
| 5600-0509 | Warning light Whelen M2 Super LED warning lights. Includes (2) blue M2B LED light heads w/chrome flanges (if applicable). Location: [#LOC]. | $572 |
| 5600-0510 | Warning light Whelen Rota-Beam series model 6RB Super LED (PR) with clear lenses; driver blue officer red. Location: [#LOC]. | $1,003 |
| 5600-0511 | Federal Signal Vision LED rotating beacons model VSLR with driver red dome/rear facing IPX6 and officer amber dome/ rear facing IPX6 LED warning lights. Location: [#LOC]. | $2,430 |
| 5600-0512 | Warning light Whelen M6 series Linear Super LED (PR) red driver amber officer. Location: [#LOC]. | $718 |
| 5600-0513 | Warning light Whelen TIR6/LIN3 rear upper level package. Includes (4) red rear facing up high TIR6 with clear lenses and (1) red LIN3 with clear lenses each side side facing up high and rearward (as applicable) of body. Requires supplimental side facing lights for NFPA compliancy. | $1,331 |
| 5600-0514 | Warning light Whelen M-Series Super LED model M9M (PR) blue/amber with clear lenses. Surface mounted with weatherproof connector. Location: [#LOC]. | $1,423 |
| 5600-0516 | Federal NVG10 Navigator LED warning light (PR) with [#COL] lenses. Location: [#LOC]. | $1,608 |
| 5600-0517 | Federal NVG10 Navigator LED warning light (PR) with clear lenses and [#COL] LED reflectors. Location: [#LOC]. | $1,608 |
| 5600-0518 | Power Arc (PR) Model LED210 blue with clear lenses. Location: [#LOC]. | $1,303 |
| 5600-0519 | Power Arc (PR) Model LED210 driver red officer blue with clear lenses. Location: [#LOC]. | $1,303 |
| 5600-0520 | Power Arc (PR) Model LED180 red with clear lenses. Location: [#LOC]. | $1,303 |

| Item No. | Description | |
|---|---|---|
| 5600-0521 | Warning light Power Arc model M90FK-RC LED (PR). Color: Red with clear lens. Location: [#LOC]. | $1,040 |
| 5600-0522 | Warning light Whelen Rota-Beam series model 6RB Super LED (PR) driver red officer blue. Location: [#LOC]. | $1,003 |
| 5600-0524 | Power Arc warning light LED (PR) Model P14SM. Color: Red with clear lenses. Location: [#LOC]. | $964 |
| 5600-0525 | Power Arc warning light LED (PR) Model P14SM. Color: Blue with clear lenses. Location: [#LOC]. | $964 |
| 5600-0526 | Warning light Federal Signal QL64XF LED (PR) red with diamond plate mounting boxes. Location: [#LOC]. | $811 |
| 5600-0527 | Warning light Whelen M6 series Linear Super LED (PR) blue driver red officer. Location: [#LOC]. | $718 |
| 5600-0528 | Power Arc warning light LED (PR) Model P14SM with diamond plate box. Color: (1) red (1) blue with clear lenses. Location: red officer side upper forward body corner blue officer side upper rearward body corner. | $1,121 |
| 5600-0529 | Power Arc warning light LED (PR) Model P6NT. Color: Red driver blue officer with clear lenses. Location: [#LOC]. | $695 |
| 5600-0530 | Power Arc warning light LED (PR) Model P6NT-BC. Color: Blue with clear lenses. Location:[#LOC]. | $695 |
| 5600-0531 | Power Arc warning light LED (PR) Model MP13SM. Color: white/blue driver white/red officer with clear lenses. Location: (1) each side front bumper inboard of frame rails. | $1,166 |
| 5600-0532 | Warning light Whelen M6RC series Super LED (PR) red with clear lens and diamond plate mounting box. Location: [#LOC]. | $843 |
| 5600-0533 | Warning light Whelen Rota-Beam series model 6RBRC Super LED (PR) red with clear lenses and diamond plate mounting boxes. Location: [#LOC]. | $1,161 |
| 5600-0534 | Warning light Whelen 500 series split TIR6 Super LED (PR) blue/amber driver red/amber officer. Surface mounted 5TSMAC bezel with weatherproof connector. Location: [#LOC]. | $608 |
| 5600-0535 | Warning light Whelen 900 series split Super LED (PR) driver red/amber oifficer blue/amber with clear lenses. Location: [#LOC] | $1,235 |
| **50' AERIAL BOOM** | | $0 |
| 6100-0015 | Aerial boom 50' Mid-Mount. Includes monitor rescue ladder split steps at tip and jack leg flood lights. | $147,379 |
| 6100-0046 | Raise aerial 50' mid-mount boom pedistal and boom support 5". For use with 85" high body. | $2,208 |
| 6100-0049 | Aerial boom 50' Mid-Mount. Includes rescue ladder split steps at tip and jack leg flood lights. Requires monitor option. | $136,527 |
| 6100-0077 | Extensions for aerial and aerial jack grease fittings. Extensions to be routed to three groups (left torque box right torque box and aerial). | $1,137 |
| 6150-0001 | Aerial hydraulic filter isolation kit. | $388 |
| 6150-0003 | Gauge aerial hydraulic oil level. Electronic display to be located [#LOC]. | $596 |
| 6300-0065 | Monitor TFT Typhoon RC electric w/extended range 1000GPM for 50' boom. Includes tip and base controls. Monitor has a powder coated silver finish. | $10,855 |
| 6300-0094 | Monitor Akron 3483 Manual with 5160 nozzle. | $6,320 |
| 6350-0003 | Waterway drain for RLP/HDT/Snozzle. | $515 |
| 6350-0005 | Rear 4" NST waterway inlet for rear mounted aerials. Includes chrome cap. | $1,042 |
| 6350-0006 | 2.5" Waterway Class 1 pressure gauge 30-0-600. Locate next to waterway inlet. | $202 |
| 6350-0007 | 3.5" Waterway Class 1 pressure gauge. Locate next to waterway inlet. | $228 |
| 6350-0009 | Right side 4" NST waterway inlet for Mid-Mount Boom or Platform. Includes chrome cap. | $1,518 |
| 6350-0010 | Flowminder with single readout and totalizer for the aerial waterway to be located at the aerial control station. | $2,536 |
| 6350-0022 | Relief valve Akron model 59 for Snozzle waterway. | $669 |
| 6350-0050 | 2.5" Pressure Gauge Dual Read (30-0-600 psi/100-0-4140 KPA). Locate next to waterway inlet Color: [#COL]. | $201 |
| 6350-0057 | Rear 5" NST waterway inlet for rear mounted high flow aerials. Piping to run on top of torque box and "Y" into waterway pipe below swivel. Includes chrome cap. | $1,595 |
| 6350-0058 | Rear 5" NST waterway inlet for rear mounted aerials. Includes chrome cap. Requires TB with 5" wway pipe. | $1,595 |
| 6350-0060 | 3.5" Waterway Class 1 pressure gauge. Locate next to waterway inlet. Color: [#COL]. | $246 |
| 6350-0061 | 3.5" Waterway compound pressure gauge (30-0-400). Color: [#COL]. | $356 |
| 6350-0075 | Rear 4" NST waterway inlet for rear mounted aerials to be flush. Includes chrome cap. | $1,042 |
| 6350-0079 | Waterway drain for RLP/HDT/Snozzle. The waterway drain valve to be located on the waterway piping and to be controlled by a cable IPOS. Locate control at rear body adjacent to waterway inlet. | $663 |
| 6500-0019 | Axe bracket mounted on aerial. For use with a 6 lb. axe only. Location: [#LOC]. | $449 |
| 6500-0035 | Piercing nozzle for Snozzle - Snozzle supplied. | $9,947 |
| 6500-0045 | Handrails 50' boom - folding. Lowers travel height approx 7.5". Includes switch and wiring to hazard light in cab. | $6,709 |
| 6500-0074 | Axe bracket mounted on aerial. For use with a 8 lb axe only. Location: [#LOC]. | $584 |
| 6550-0004 | Whelen strobe lights at ladder tip (PR) with [#COL] lenses. Switched with aerial master. | $1,079 |
| 6550-0020 | Whelen 500 Series TIR6 Super-LED lights at ladder tip (PR) with red lenses. Switched with aerial master. | $847 |

| Item No. | Description | |
|---|---|---|
| 6550-0021 | Outrigger warning lights (PR) Trucklite model 21 LED in rubrail. | $160 |
| 6550-0024 | Outrigger warning lights (PR) Trucklite model 21 LED in rubrail. | $160 |
| 6550-0030 | Whelen M6J Super LED red/blue warning lights (4) with clear lenses. Located down low across front of platform wired to upper level lights. | $1,644 |
| 6550-0031 | Whelen M6J Super LED split red/blue warning lights on platform (PR) with clear lenses. The lights shall be switched with aerial master and located one each on platform. | $787 |
| 6550-0042 | Warning light Whelen Dominator Plus model DP4ARAR with (4) LINZ6 LEDs Amber Red Amber Red. Location: [#LOC]. The light shall be switched with emergency lighting. | $1,189 |
| 6550-0050 | Whelen 500 Series TIR6 Super-LED lights at ladder tip (PR) red with clear lenses. Switched with aerial master. | $847 |
| 6550-0053 | Whelen M6K Super LED split red/amber warning lights with clear lenses on platform (PR). The lights shall be switched with aerial master and located [#LOC]. | $797 |
| 6550-0063 | Whelen VTX609R Vertex Super-LED lights at ladder tip (PR). Red with clear lenses and chrome bezels. Switched with aerial master. | $603 |
| 6560-0002 | Spot light 12V located [#LOC]. | $446 |
| 6560-0003 | Flood light 12V located [#LOC]. | $446 |
| 6560-0004 | Collins light FX-12 located [#LOC]. | $576 |
| 6560-0005 | Flood lights Unity at base (PR). | $522 |
| 6560-0006 | Collins light FX-12 at base (PR). | $1,260 |
| 6560-0012 | Quartz light 750W Magnafire model KR636-S. Requires 110-volt receptacle at tip option. The light shall be located [#LOC]. | $1,137 |
| 6560-0018 | Quartz light Fire Research Focus 750W/110V model FCA570-S75-ON without pole. The light shall be located [#LOC]. | $1,249 |
| 6560-0019 | Quartz light Fire Research Optimum 750W/110V model OPA570-S75-ON without pole. The light shall be located [#LOC]. | $1,323 |
| 6560-0062 | Fire Research Evolution 12V LED model FCA570-V15-ON without pole. The light shall be located [#LOC]. | $2,139 |
| 6560-0092 | Wire guard for FRC Evolution light(s) on aerial. Location: [#LOC]. | $154 |
| 6560-0093 | Light Whelen Pioneer Plus model PFP2AC powder coated black with permanent mount (ROM model KR-SB-6PFP2AC) powder coated black. Requires 110-volt receptacle at tip option. Location(s): [#LOC]. | $2,159 |
| 6560-0102 | Light Whelen Pioneer Plus model PFP2AC with permanent mount. Requires 110V receptacle at tip option. Location(s): [#LOC]. | $2,159 |
| 6560-0105 | Light Whelen Pioneer Plus 120V model PFP1AP1 with PBAPEDA pedestal mount. Requires 110 volt twist lock receptacle at tip option. Location(s): [#LOC]. | $1,711 |
| 6560-0106 | Quartz light Fire Research Spectra 12V LED model SPA260-Q15 with surface mount and on/off sw on platform console. The light shall be located [#LOC]. | $1,980 |
| 6560-0109 | Quartz light Fire Research Spectra 12V LED model SPA260-Q15 with surface mount powder coated black and on/off sw on platform console. The light shall be located [#LOC]. | $2,033 |
| 6560-0113 | Light Whelen Pioneer Plus 120V model PFP1AP1 with PBAPEDA pedestal mount located at tip of base section (PR). Requires 110 volt twist lock receptacle at tip option. | $3,528 |
| 6560-0116 | Light Whelen Pioneer Plus 120V model PSP1AP1 with PBAPEDA pedestal mount. Requires 110 volt twist lock receptacle at tip option. Location(s): [#LOC]. | $1,936 |
| 6560-0133 | Light Whelen Pioneer Plus 120V model PFP1AP1 with PBAPEDA pedestal mount powder coated black. Requires 110 volt twist lock receptacle at tip option. Location(s): [#LOC]. | $1,711 |
| 6560-0135 | Rigid Industries model 24421 LED spot light. Includes hardwired switch on turntable console. Location: left and right side of base section. | $1,943 |
| 6560-0136 | Light Rigid Industries model 24411 LED flood light w/bail mount platform mounted. Includes hardwired switch on platform console. Location(s): [#LOC]. | $972 |
| 6560-0145 | Quartz light Fire Research Spectra 12V LED model SPA260-Q20 with surface mount and on/off sw on platform console. The light shall be located [#LOC]. | $2,195 |
| 6560-0153 | Light Rigid Industries model 50131 LED Dually D2 spotlight w/bail mount. Location(s): [#LOC]. | $552 |
| 6560-0156 | Light Whelen Pioneer Plus model PFP2AC with permanent mount powder coated black. Requires 110V receptacle at tip option. Location(s): [#LOC]. | $2,159 |
| 6560-0159 | Quartz light Fire Research Spectra LED 110V model SPA260-K15 with surface mount. Requires 110-volt twist lock receptacle at tip option. The light shall be located [#LOC]. | $2,328 |
| 6560-0162 | Light Whelen Pioneer Plus model PFP2 12V with permanent mount powder coated black. Requires engineering approval. Location(s): [#LOC]. | $2,495 |
| 6570-0003 | 110V/15A twist lock receptacle at tip. | $2,875 |
| 6570-0008 | Intercom aerial 2-way. Atkinson Dynamics (Federal). Speaker to be located to rear of platform on Bronto units. | $1,607 |
| 6570-0015 | 110V/20A twist lock receptacle at tip. | $2,875 |
| | | $0 |
| 6570-0040 | 110V/30A twist lock receptacle at tip. | $2,986 |
| 6570-0042 | 120V/250V 20A Daniel Woodhead Non-NEMA model 67W08 receptacle at tip. | $3,276 |

| Item No. | Description | |
|---|---|---|
| 6570-0047 | (2) 110v circuits to tip. (1) with a 20A twist lock recept in platform and (1) to supply power to quartz lights. Both to include 15A breakers. Aramco Bronto only. | $2,875 |
| 6570-0048 | (2) 110v circuits to tip. (1) with a 20A household recept in platform and (1) to supply power to quartz lights. Both to include 15A breakers. Aramco Bronto only. | $2,875 |
| 6570-0051 | 110V/15A Hubble twist lock receptacle at tip. Includes grey weatherproof cover. | $2,875 |
| 6570-0064 | 110V/15A Daniel Woodhead twist lock receptacle at tip. | $3,075 |
| 6750-0000 | Aerial sign plates 10 x 144 (PR). Available on Booms HP75 and HP100 only. Does not include lettering. Color: [#COL]. | $1,562 |
| 6750-0005 | Aerial sign plate 9 x 266 - Snozzle supplied. Right side of booms only. Does not include lettering. Color: [#COL] | $987 |
| 6750-0022 | Aerial sign plates 10 x 144 (PR) with beveled edges. Available on Booms HP75 and HP100 only. Does not include lettering. Color: Job Color. | $1,718 |
| 6850-0002 | Pump panel control station. HP75 / HP78 and 50' rear mount boom. | $3,690 |
| 6850-0030 | Aerial control station at top of body (Add'l). 50' Mid-Mount boom. | $3,369 |
| 6900-0000 | Aerial flow test - 3rd party. | $466 |
| 6900-0005 | Aerial flow test - 3rd party. | $466 |
| 6900-0006 | Aerial flow test - 3rd party. | $466 |
| 6900-0007 | Aerial 2016 NFPA Certification. | $3,732 |
| **MISC EQUIPMENT** | | $0 |
| 7000-0003 | Akron Brass stacked tips w/stream shaper. Stream Shaper 3485 & Stacked Tips style 3499. | $633 |
| 7200-0000 | Adapter Chrome 3"MNST x 2.5"FNST with Plug | $212 |
| 7200-0001 | Adapter Chrome 3"FNST x 2.5"MNST with Cap. | $244 |
| 7200-0005 | Chrome Swivel Connector 6"FNST x 4.5"FNST Long Handle | $463 |
| 7200-0006 | Discharge Adapter 2.5"FNST x 2.5"MNST Spec with Cap - Special adapter with specified thread. | $150 |
| 7200-0007 | Adapter 2.5"MNST x 2.5"FNST Spec with Plug - Special adapter with specified thread. | $186 |
| 7200-0008 | Adapter Wye 2.5"FNST x 1.5"MNST. | $585 |
| 7200-0009 | Adapter Wye 4"FNST x (2) 2.5" FNST | $749 |
| 7200-0010 | Adapter 2.5" FNST x 2.5" F British Instantaneous. | $212 |
| 7200-0011 | Adapter 2.5" MSNT x 2.5" M British Instantaneous. | $159 |
| 7200-0013 | Adapter Collector 6"FNST x (3) 2.5"M British Instantaneous | $951 |
| 7200-0014 | Adapter 2.5"FNST x 4" Storz | $358 |
| 7200-0015 | Adapter 3"FNST x 4" Storz with cap. | $376 |
| 7200-0016 | Adapter 3"FNST x 5" Storz and insert cap. | $461 |
| 7200-0017 | Swivel connector 5"FNST x 4" Storz with tethered Cap. | $441 |
| 7200-0018 | Swivel Connector 4" FNST x 4" Storz with Tethered Cap. | $333 |
| 7200-0019 | Swivel connector 4"FNST x 5" Storz with tethered cap. | $419 |
| 7200-0020 | Swivel connector 5"FNST x 5" Storz with tethered cap. | $506 |
| 7200-0021 | Swivel Connector 6" FNST x 4" Storz with Tethered Cap. | $483 |
| 7200-0022 | Swivel Connector 6" FNST x 5" Storz with Tethered Cap. | $522 |
| 7200-0023 | Swivel Connector 3" FNST x 4" Storz 30 Degree Elbow with Tethered Cap. | $511 |
| 7200-0024 | Swivel Connector 3"FNST x 5" Storz 30 Deg Elbow with Tethered Cap. | $636 |
| 7200-0025 | Swivel Connector 4"FNST x 4" Storz 30 Deg Elbow with Tethered Cap. | $348 |
| 7200-0026 | Swivel Connector 4" FNST x 5" Storz 30 Deg Elbow with Tethered Cap. | $428 |
| 7200-0027 | Adapter 2.5"MNST x 2.5" Storz with 30 degree droop and insert cap. | $162 |
| 7200-0028 | Adapter 5" FNST x 5" Storz 30 degree with tethered cap. | $283 |
| 7200-0030 | Adapter 5" FNPT X 6" MNST Chrome. | $259 |
| 7200-0031 | 1.5" Chrome Cap w/Chain. | $19 |
| 7200-0032 | Adapter 2.5"FNST x 2.5" Storz. Includes cap and connector. | $160 |
| 7200-0035 | Adaptor 30 degree for rear 2.5" discharge. To be 2.5" FNST x 2.5" MNST. Ship loose. | $204 |
| 7200-0036 | Intake 6" Elkhart Elk-O-Lite 9786 Piston Valve. Ship Loose. | $2,123 |
| 7200-0040 | Chrome adapter for 2.5" discharge. Includes 2.5" FNST x 1.5" IPT thread with cap. | $72 |
| 7200-0043 | Intake 6" Northline FSGR Piston Valve with intake Relief. ship loose | $1,234 |
| 7200-0044 | Adapter.75 FGHT (garden hose) x 1.5" Storz | $91 |
| 7200-0045 | Intake gated relief valve. 6"FNST x 6"MNST. | $1,074 |
| 7200-0046 | Swivel Pyrolite connector 2.5"FNST x 2.5" FNST locker lug. | $104 |
| 7200-0047 | Adapter Pyrolite 2.5"MNST x 2.5"MNST. | $58 |
| 7200-0054 | Adapter wye suction 6"FNST x (3) 2.5" FNST | $1,832 |
| 7200-0058 | Adapter 2.5FNST x 2.5M (3.232x5Tip) with Cap | $197 |
| 7200-0059 | Adapter 2.5MNST x 2.5F Swivel (3.232x5Tip) with Plug | $204 |
| 7200-0062 | Adapter 4.5" FNST x 5" Storz. | $244 |
| 7200-0063 | Chrome adaptor for 2.5" discharge. Includes 2.5" FCSA x 1.5" NPSH threads with caps. | $108 |
| 7200-0071 | Adapter 1.5" FNST X 1.0" MNST w/Cap. | $90 |
| 7200-0074 | Swivel Connector 6"FNST x 5" Storz with 30 degree elbow and Tethered Cap | $525 |
| 7200-0076 | A 5" FNST x 4" Storz adapter with a 30 degree droop shall be shipped loose. | $187 |
| 7200-0086 | Adapter Chrome 3"FNST x 2.5"MNST | $234 |
| 7200-0090 | Adapter 2.5" female NST x 2.5" male British Instantaneous with cap | $117 |

| Item No. | Description | |
|---|---|---|
| 7200-0095 | Akron 7980 Piston Intake Valve with 5" Storz outlet with cap. | $2,334 |
| 7200-0098 | A 2.5" MNST x 5" FNST with 5" Plug Adapter. | $529 |
| 7200-0100 | Intake 6" Elkhart Elk-O-Lite 9786 Piston Valve. Ship Loose. The valve shall have an 6" female NST inlet and 5" swivel with a locking Stoz inlet | $2,123 |
| 7200-0101 | Adapter 2.5FNST x 2.5M British Columbia Threads (BCT 3.00x8Tip) with Cap. | $190 |
| 7200-0102 | Adapter 2.5MNST x 2.5F Swivel British Columbia Threads (BCT 3.00x8TPI) with Plug | $377 |
| 7200-0103 | Inlet valve gated w/relief and elbow. 4"FNST x 4" STORZ and cap. (Kocheck Model 40K40204) | $2,413 |
| 7200-0105 | Elkhart 18" Pipe Extender 8298EXw/8298. | $553 |
| 7200-0107 | Adapter aluminum 3"FNST x 2.5"MNST with Cap. | $244 |
| 7200-0108 | Adapter 4" FNST x 5" Storz. | $244 |
| 7200-0109 | Adapter 4.5" FNST X 4.5" MNST Chrome. | $356 |
| 7200-0111 | Adapter 2.5" female NST x 2.5" male Cleveland 3.078 x 8TPI with cap. | $192 |
| 7200-0112 | Adapter 2.5MNST x 2.5F Swivel (Cleveland 3.078 x 8TPI) with Plug | $394 |
| 7200-0115 | Swivel Connector 6"FNST x 4" Storz with 30 degree elbow and Tethered Cap | $525 |
| 7200-0116 | Adapter 2.5FNST x 2.5M Alberta Mutual Aid Threads (AMA 2.99x8Tip) | $116 |
| 7200-0117 | Swivel Connector 4"FNST x 6" MNST with 30 degree elbow and Cap. (Task Force Tip AH5NP) | $678 |
| 7200-0119 | Adapter Gated Wye with 2.5"FNST x (2) 1.5"MNPSH. | $1,190 |
| 7200-0120 | Adapter 4" FNST X 3.5" MNST Chrome with cap. | $356 |
| 7300-0000 | Reducer Chrome 2.5"FNST x 1.5"MNST. | $75 |
| 7400-0000 | Chrome Intake elbow 2.5" MNST 45Deg | $197 |
| 7400-0001 | Chrome discharge elbow 3"FNST x 2.5"MNST 45 Deg | $261 |
| 7400-0002 | Chrome suction elbow 3"MNST x 2.5"FNST 45Deg | $261 |
| 7400-0003 | Chrome discharge elbow 3" 30 Degree. | $245 |
| 7400-0004 | Elbow 30 degree chrome swivel w/2.5"FNST x 2.5"MNST. | $75 |
| 7400-0005 | Chrome discharge elbow 2.5" 45 degree. | $197 |
| 7400-0008 | Chrome discharge elbow 3.0" FNST X 2.5" MCSA 30Deg chrome. | $268 |
| 7400-0010 | Chrome discharge elbow 4" 30 Degree. | $472 |
| 7400-0011 | Chrome Intake elbow 2.5" MNST x 2.5" Female 3.187 x 6 thread per inch with a 2.5" Male 3.187 x 6 thread per inch chrome plug with chain 45 Degree | $252 |
| 7400-0012 | Chrome discharge elbow 2.5" FNST x 2.5" Male 3.187 x 6 thread per inch with a 2.5" Female 3.187 x 6 thread per inch chrome rocker lug cap with chain 45 Degree. | $241 |
| 7400-0013 | Chrome discharge elbow 2.5" FNST x 2.5" Male 2.968 x 8 thread per inch with a 2.5" Female 2.968 x 8 thread per inch chrome rocker lug cap with chain 45 Degree. | $241 |
| 7400-0014 | Chrome discharge elbow 2.5" FNST x 2.5" Male 2.99 x 8 thread per inch with a 2.5" Female 2.99 x 8 thread per inch chrome rocker lug cap with chain 30 Degree. | $241 |
| 7500-0000 | Ziamatic Air Pack Bracket (2PHS) Model #UN-6-30-2PHS. Shipped loose. | $321 |
| 7500-0001 | Ziamatic Air Pack Bracket (FPHS) Model #UN-6-30-3-FPHS. Shipped loose. | $325 |
| 7500-0002 | Universal air pack bottle bracket (EA). Shipped loose. | $156 |
| 7500-0004 | Bracket SCBA Lifeguard SmartDock Gen2 restraint system. Ship Loose. | $506 |
| 7550-0000 | ABC Extinguisher 10# w/Bracket. | $171 |
| 7550-0001 | ABC Extinguisher 12# w/Bracket | $269 |
| 7550-0002 | Extinguisher 15# CO2 w/bracket. | $453 |
| 7550-0003 | Extinguisher ABC 20# dry chemical w/bracket. Amerex model A411 | $251 |
| 7550-0004 | Extinguisher 2.5 Gallon Water Pressure w/Bracket. Amerex model A240 | $200 |
| 7550-0006 | ABC Extinguisher 20# ABC w/Bracket. Mount bracket to floor just inside the interior on the officer's side rear of 30# extinguisher. | $177 |
| 7600-0000 | Axe bracket - shipped loose. | $101 |
| 7600-0001 | Flat Head Axe 6 lb. | $64 |
| 7600-0002 | Pick Head Axe 6#. | $81 |
| 7600-0003 | Flat Head Axe 6# with Fiberglass Handle. | $138 |
| 7600-0004 | Pick Head Axe 6# with Fiberglass Handle. | $142 |
| 7600-0005 | Pike Pole Fiberglass 6'. | $144 |
| 7600-0006 | Pike Pole Fiberglass 8'. | $95 |
| 7600-0007 | Pike Pole Fiberglass 10'. | $182 |
| 7600-0008 | Pike Pole Fiberglass 12'. | $192 |
| 7600-0009 | Pike Pole Mounting Tube Style (Each) | $228 |
| 7600-0013 | Hooligan Tool 36". | $287 |
| 7600-0014 | Hooligan Tool Bracket (Each). | $168 |
| 7600-0015 | Wheel Chocks 32" NFPA Compliant - Pair of Zico AC-32. Up to 32" diameter Tires. Includes mounting bracket. | $480 |
| 7600-0016 | Wheel chocks 44" NFPA compliant pair (PR) of Zico SAC-44. Up to 44" diameter tires. Includes mounting brackets. | $540 |
| 7600-0017 | Collins CL-12-M hand held spotlight (shipped loose) | $477 |
| 7600-0018 | Adjustable combination hydrant spanner wrench. | $86 |
| 7600-0019 | Spanner Wrench (2) #10 with Holder. | $180 |
| 7600-0024 | Crow Bar 36". | $19 |

| Item No. | Description | |
|---|---|---|
| 7600-0025 | Crow Bar 50". | $133 |
| 7600-0026 | Crow Bar 60". | $55 |
| 7600-0027 | Bracket for Crow Bar (Each) | $247 |
| 7600-0029 | Bolt Cutter 24". | $78 |
| 7600-0030 | Bolt Cutter 36". | $540 |
| 7600-0031 | Bracket for Cutter (Each) | $72 |
| 7600-0035 | Jack Hydraulic 5 Ton | $89 |
| 7600-0037 | Wheel Chocks Aluminum Zico AC-32 with mounting brackets. | $294 |
| 7600-0038 | Salvage Cover 12' x 18'. | $337 |
| 7600-0043 | First Aid Kit 24 Unit | $145 |
| 7600-0044 | First Aid Kit 36 Unit. | $282 |
| 7600-0053 | Wheel Chocks Alum HGS Heavy Includes Brackets. | $301 |
| 7600-0054 | Heavy Duty Tire Inflator with Gauge. Registers from 10 to 120 psi. | $157 |
| 7600-0057 | Wrench lug 2pc - lug wrench in two (2) pieces. Lug ends are 1.5" and 1.312" (BRT19951) with handle (BRT17899). | $119 |
| 7600-0058 | Wrench Hydrant w/2 Spanner Wrench Combination Set with Bracket. Meets FAA 10C Requirements for ARFF/Fire Trucks. | $136 |
| 7600-0060 | Saw Partner K12FD w/aluminum case. Meets FAA 10C requirements for ARFF/Fire trucks. Partner Model K12FD9514MK fire deptartment rescue saw 14". | $2,687 |
| 7600-0080 | Sledge Hammer 8# with Fiberglass Handle | $58 |
| 7600-0081 | Hammer 4# w/fiberglass handle. | $38 |
| 7600-0084 | 12" Hacksaw with 12 Spare Blades. | $93 |
| 7600-0087 | Pike Pole Fiberglass 8 Ft w/ D-Handle. | $95 |
| 7600-0088 | Pike Pole 8 Ft. Firehooks Unlimited APH-8 pole. | $137 |
| 7600-0089 | Pike Pole 6 Ft. Firehooks Unlimited New York hook RH-6 pole. | $146 |
| 7600-0092 | Rubber mallet with fiberglass handle. | $48 |
| 7600-0093 | Wrench Storz adjustable with holder. | $106 |
| 7600-0094 | Craftsman Tool Set 283 piece set with Allen Key set and 4 Drawer Tool Box. | $810 |
| 7600-0095 | Pike Pole 6 Ft. Firehooks Unlimited APS-6 pole. | $164 |
| 7600-0099 | Pike Pole 8 Ft. Firehooks Unlimited APH-8 pole with D-Handle. | $157 |
| 7600-0100 | Pike Pole 10 Ft. Firehooks Unlimited APH-10 pole. | $200 |
| 7600-0101 | Pike Pole 12 Ft. Firehooks Unlimited APH-12 pole. | $220 |
| 7600-0102 | Pike Pole 6 Ft. Firehooks Unlimited APH-6 pole. | $124 |
| 7600-0103 | Pike Pole 6 Ft. Firehooks Unlimited fiberglass MPH-6 pole. Includes gas shut-off end. | $127 |
| 7600-0104 | Pike Pole 8 Ft. Firehooks Unlimited fiberglass MPH-8 pole. Includes gas shut-off end. | $149 |
| 7600-0105 | Pike Pole 12 Ft. Firehooks Unlimited fiberglass MPH-12 pole. Includes gas shut-off end. | $227 |
| 7600-0108 | Pike Pole 6 Ft. Akron UT-6-DWH with drywall hook. | $138 |
| 7600-0109 | Pike Pole 10 Ft. Akron UT-10-DWH with drywall hook. | $151 |
| 7600-0110 | Pike Pole 4 Ft. Akron UT-4-D-DWH with drywall hook and D-handle. | $138 |
| 7600-0111 | Pike Pole 12 Ft. Akron PP-12 with USA standard hook. | $179 |
| 7600-0112 | Pike Pole 8 Ft. Akron PP-8 with USA standard hook. | $150 |
| 7600-0113 | Pike Pole 6 Ft. Akron PP-6 with USA standard hook. | $137 |
| 7600-0114 | Tire inflator large bore heavy duty includes gauge. Registers from 10 to 160 psi in 2 psi increments. | $108 |
| 7600-0115 | Pike Pole 8 Ft. Firehooks Unlimited New York hook RH-8 pole. | $153 |
| 7600-0116 | Pike Pole Fiberglass 6 Ft w/ D-Handle. | $111 |
| 7600-0117 | Pike Pole Fiberglass 12 Ft w/ D-Handle. | $137 |
| 7600-0118 | Pike Pole Fiberglass 4 Ft w/ D-Handle. | $106 |
| 7600-0120 | Pike Pole 8 Ft. Firehooks Unlimited New York hook RH-8 pole with steel shaft and pry end. | $153 |
| 7600-0121 | Axe Paratech Topcut. | $146 |
| 7600-0122 | Spanner Wrench Akron SS-MP bracket with (4) Super Spanner wrenches. | $180 |
| 7600-0123 | 10 Ft. Firehooks Unlimited New York Roof Hook (RH-10) with Fiberglass pole and chisel end. | $211 |
| 7600-0124 | 8 Ft. Firehooks Unlimited New York Roof Hook (RH-8) with Fiberglass pole and chisel end. | $176 |
| 7600-0125 | 6 Ft. Firehooks Unlimited New York Roof Hook (RH-6) with Fiberglass pole and chisel end. | $158 |
| 7700-0004 | Hard suction hose 6" X 10' with Pyrolite couplings. | $1,087 |
| 7700-0006 | Booster hose 100' long 1" 800 PSI. | $681 |
| 7700-0007 | Akron 1" 60gpm Pistol Grip Assault Nozzle | $735 |
| 7700-0010 | Hard Suction Hose 3" X 10' with Pyrolite Couplings. | $288 |
| 7700-0011 | Hard Suction Hose 4.5" X 10' with Pyrolite Couplings. | $662 |
| 7700-0012 | Hard suction hose 5" X 10' with Pyrolite couplings. | $797 |
| 7700-0013 | Hard Suction Hose 5" X 10' with Chrome Couplings | $938 |
| 7700-0015 | Hard Suction Hose 6" X 10' with Chrome Couplings. | $1,306 |
| 7700-0017 | Soft Suction Hose 6" x 4.5" with Long Handle Chrome Couplings. | $1,620 |
| 7700-0018 | Soft Suction Hose 6" X 15' with Long Handle Chrome Couplings. | $1,393 |
| 7700-0019 | Booster Hose 50' Length 75" 800PSI | $412 |
| 7700-0020 | Booster hose 100' length of 3/4" 800 PSI. | $595 |
| 7700-0021 | Booster Hose 50' Length 1" 800 PSI. | $461 |

| Item No. | Description | |
|---|---|---|
| 7700-0022 | Booster Hose 50' x 1" Reeltex (Each) Niedner Reeltex fabric booster hose with couplings. | $461 |
| 7700-0023 | Booster Hose 100' x 1" Reeltex (Each) Niedner Reeltex fabric booster hose with couplings. | $708 |
| 7700-0025 | Hose double jacket 50' length 1.5" 600 PSI. | $217 |
| 7700-0026 | Double Jacket Hose 50' Length 2.5" 600PSI | $337 |
| 7700-0027 | Double Jacket Hose 50' Length 3" 600PSI | $423 |
| 7700-0028 | Elkhart 1" Pistol Grip Nozzle | $816 |
| 7700-0029 | Akron 1" Pistol Grip Assault Nozzle | $698 |
| 7700-0030 | Akron 1.5" Assault Nozzle | $755 |
| 7700-0031 | Nozzle Akron 1.5" pistol grip - 95 gpm. | $818 |
| 7700-0050 | Elkhart 282A Elk-O-Lite Stream Shaper | $192 |
| 7700-0051 | Elkhart ST-194 Elk-O-Lite Stacked Tips. | $494 |
| 7700-0052 | Elkhart SM-1250 Select-O-Matic Master Stream Nozzle | $1,174 |
| 7700-0053 | PVC suction hose 6" X 10' with Pyrolite couplings. | $1,274 |
| 7700-0058 | Akron Apollo (3433) High Rise Monitor. Include a dual inlet ground base lift off and direct mount base. | $3,708 |
| 7700-0060 | Akron Quad Stacked Deluge Tips (2499). For use with Akron monitors. Ship Loose. | $477 |
| 7700-0061 | Akron Turbomaster Nozzle (1755). Ship Loose. | $1,433 |
| 7700-0064 | Booster Hose 100' x 1.5" Reeltex (Each) Niedner Reeltex fabric booster hose with couplings. | $727 |
| 7700-0065 | Nozzle Akron 5160 Manual Akromatic | $1,059 |
| 7700-0066 | Nozzle 1.5  20-95gpm TFT NH Threads Pistol Grip | $335 |
| 7700-0073 | Akron Monitor Apollo 3423 portable. | $3,788 |
| 7700-0074 | Nozzle 1.5" Turbojet high pressure | $417 |
| 7700-0076 | Booster Hose 1 inch x 200 feet with 800 psi working pressure | $751 |
| 7700-0079 | TFT 3.5" Stacked Deluge Tips YST-4NN. For use with TFT Monitors. Ship Loose. | $769 |
| 7700-0084 | Hard Suction Hose Rack 6" Hose (Each). | $388 |
| 7700-0097 | Soft Suction Hose 20ft 5" with 4.5" long handle female coupler on one end and a 4.5" long handle male coupler on the other end. | $1,620 |
| 7700-0098 | Hard Suction Hose 6" x 6' with Pyrolite Couplings | $884 |
| 7700-0103 | Nozzle Elkhart SM-3FG Pistol Grip 1" hose reel. | $717 |
| 7700-0104 | Booster Hose 100' x 1" Niedner Hotstop fabric booster hose with couplings. | $641 |
| 7700-0106 | Kochek PVC Hard Suction Hose 6" x 8' with Pyrolite Couplings. | $835 |
| 7700-0107 | Kochek PVC Hard Suction Hose 4" x 10' with Storz Pyrolite Couplings. | $551 |
| 7700-0108 | Hose booster rubber 1" X100' Red in color with couplings Darley part number AC696. | $662 |
| 7700-0114 | Hard suction hose 6" x 8' with Pyrolite couplings. | $881 |
| 7700-0115 | Kochek PVC Hard Suction Hose 6" x 10' with Pyrolite Couplings. | $906 |
| 7700-0116 | 3" Double Jacket Hose with 2.5" couplings 50' Length 600PSI | $423 |
| 7700-0117 | Hose single jacket 50' length 1.5 | $216 |
| 7700-0118 | Akron Brass stacked tips w/stream shaper. Base style 3485 & Stacked Tips style 2499. | $632 |
| 7700-0119 | Soft Suction Hose 20ft 5" with 6" long handle female swivel coupler on one end and a 4.5" long handle female swivel coupler on the other end. | $1,619 |
| 7700-0122 | TFT 1" Ultimatic Pistol Grip Nozzle 1. Flow range 10-125gpm. | $925 |
| 7700-0126 | Hose PVC Suction Hose 6" x 12' with Action Pyrolite Couplings. | $1,190 |
| 7800-0000 | Alco-Lite 8' Folding Ladder without shoes. | $318 |
| 7800-0002 | Alco-Lite FL-10 10' folding ladder without shoes. | $266 |
| 7800-0003 | 10' folding Duo-Safety 585-A ladder. | $415 |
| 7800-0004 | Aluminum Cast Bracket for Duo Safety Folding Ladder - For 8' or 10' | $441 |
| 7800-0006 | Alco-Lite PRL-12 roof ladder. | $423 |
| 7800-0007 | Alco-Lite PRL-14' roof ladder. | $451 |
| 7800-0008 | 14' roof ladder Duo-Safety 775-A. | $624 |
| 7800-0009 | Duo-Safety 16' 875-A roof ladder. | $482 |
| 7800-0010 | Alco-Lite PRL-16' roof ladder. | $542 |
| 7800-0013 | Alco-Lite AEL-12 Attic Extension Ladder | $563 |
| 7800-0014 | Alco-Lite PEL-16 Extension Ladder | $732 |
| 7800-0016 | Alco-Lite PEL-24' 2-section extension ladder. | $922 |
| 7800-0017 | Alco-Lite PEL3-24 extension ladder. | $1,329 |
| 7800-0018 | Extension ladder Duo-Safety 900-A 24' 2-section. | $991 |
| 7800-0019 | Vertical Ladder Bracket | $469 |
| 7800-0020 | Adjustable Track for Ladder Bracket | $247 |
| 7800-0021 | Alco-Lite PEL-28' extension ladder. | $1,197 |
| 7800-0022 | Alco-Lite PEL-30 Extension Ladder | $1,288 |
| 7800-0023 | Alco-Lite PEL3-35' 3-section extension ladder. | $1,628 |
| 7800-0024 | Alco-Lite PEL-35' extension ladder. | $1,486 |
| 7800-0025 | Duo-Safety 1225-A 35' 3-section extension ladder. | $1,650 |
| 7800-0027 | Little Giant model 17 ladder. | $756 |
| 7800-0028 | Alco-Lite PEL-14 14' 2-Section Extension Ladder. | $708 |
| 7800-0031 | Little Giant Model 22 ladder. | $716 |

| Item No. | Description | |
|---|---|---|
| 7800-0032 | Alco-Lite FL-10 10' folding ladder w/safety shoes. | $266 |
| 7800-0033 | Duo-Safety 20' 2-section extension ladder 900-A. | $1,007 |
| 7800-0037 | Ladder Extension Duo-Safety 3-Section 35 Foot Model 1225-A with a Wellington Puritan #G5732S0600K02 Halyard. | $1,591 |
| 7800-0039 | Duo-Safety 1225-A 30' 3 Section Extension Ladder | $1,513 |
| 7800-0040 | Alco-Lite PEL3-28 Extension Ladder | $1,404 |
| 7800-0041 | Duo-Safety 1200-A 28' 2-section extension ladder. | $1,215 |
| 7800-0043 | Duo-Safety 12' 775-A roof ladder. | $416 |
| 7800-0044 | Alco-Lite PEL-12 Extension Ladder | $621 |
| 7800-0045 | Duo-Safety 1200-A 35' 2 Section Extension Ladder | $1,527 |
| 7800-0047 | Duo-Safety 925-A 26' 3-section extension ladder. | $1,100 |
| 7800-0053 | Alco-Lite AEL-14 Attic Extension Ladder. | $634 |
| 7800-0062 | Alco-Lite PRL-10 Roof Ladder. | $394 |
| 7800-0069 | Alco-Lite PEL3-35P Extension Ladder w/Stay Poles. | $1,721 |
| 7800-0076 | Duo-Safety 1200-A 35' 2 Section Extension Ladder. Special custom length ladder 1" shorter than standard in closed position. | $1,527 |
| 7800-0077 | Duo-Safety 925-A 22' 3 Section Extension Ladder | $1,078 |
| 7800-0078 | Alco-Lite FL-10 10' folding ladder without shoes and handles. | $266 |
| 7800-0080 | Aluminum Cast Bracket for Alcolite Folding Ladder - For 8' or 10' | $441 |
| 7800-0082 | Alco-Lite FRL-14' roof ladder. | $549 |
| 7800-0083 | Alco-Lite FEL-24' 2-section extension ladder. | $1,200 |
| 7800-0085 | 14' roof ladder Duo-Safety 775-DR. Includes folding steel roof hooks on both ends with prong feet. | $659 |
| 7800-0087 | Alco-Lite FEL3-35 3-section fiberglass extension ladder. | $1,776 |
| 7800-0088 | 10' roof ladder Duo-Safety 775-DR. Includes folding steel roof hooks on both ends with prong feet. | $581 |
| 7800-0089 | Duo-Safety 16' roof ladder 875-DR. Includes folding steel roof hooks on both ends with prong feet. | $752 |
| 7800-0090 | Little Giant model 13 ladder. Classic style | $617 |
| 7800-0091 | 8' folding Duo-Safety 585-A ladder. | $313 |
| 7800-0092 | Duo-Safety 1225-A 28' 3-Section Extension Ladder | $1,215 |
| 7800-0095 | Duo-Safety 20' roof ladder 875-DR. Includes folding steel roof hooks on both ends with prong feet. | $870 |
| 7900-0007 | Chrome Barrel Strainer 2.5" | $283 |
| 7900-0010 | Chrome Barrel Strainer 6" NST. | $354 |
| 7900-0011 | Strainer Bracket 6". | $110 |
| 7900-0012 | Galvanized Strainer Basket 6" | $403 |
| 7900-0013 | Ramsey Portable Winch 5k | $1,087 |
| 7900-0014 | DOT Required Drive Away Kit - Kit includes three (3) triangular warning reflectors with carrying case. This kit is for the end user and is to remain with the truck. | $31 |
| 7900-0016 | Ferno Washington Model 71Stokes | $1,116 |
| 7900-0031 | Handheld flashlight orange Streamlight Litebox flashlight with vehicle mount system. | $170 |
| 7900-0033 | Medical Kit w/BLS | $374 |
| 7900-0041 | Ramsey QM9000 9000 lb. portable winch. | $1,700 |
| 7900-0043 | Firecom UH-40 headset. | $456 |
| 7900-0045 | Poly Box 6" high x 8" wide x 22" deep. | $192 |
| 7900-0046 | Goodyear front spare tire assembly with aluminum wheel to match front tire / wheel specification. | $2,094 |
| 7900-0047 | Goodyear rear spare tire assembly with aluminum wheel to match rear tire / wheel specification. | $1,811 |
| 7900-0048 | Michelin front spare tire assembly with aluminum wheel to match front tire / wheel specification. | $1,899 |
| 7900-0049 | Michelin rear spare tire assembly with aluminum wheel to match rear tire / wheel specification. | $1,697 |
| 7900-0051 | Goodyear rear spare tire assembly with steel wheel to match rear tire specification. | $1,225 |
| 7900-0052 | Michelin front spare tire assembly with steel wheel to match front tire specification. | $1,432 |
| 7900-0053 | Michelin rear spare tire assembly with steel wheel to match rear tire specification. | $1,097 |
| 7900-0054 | Handheld Flashlight Orange Streamlight Survivor LED flashlight with holder and AC/DC charger. Ship loose. | $175 |
| 7900-0056 | Akron discharge pipe (3488). Ship loose. | $427 |
| 7900-0057 | Intercom System Setcom Orange County Reference Quote in Truck File All Components are to be Shipped Loose for Customer Installation. | $6,316 |
| 7900-0058 | Diagnostic Software Kit for S-60 Engine Allison Transmission and ABS | $7,699 |
| 7900-0060 | Monitor Akron #3426 | $1,361 |
| 7900-0061 | Firecom UH-10 headset. | $456 |
| 7900-0063 | Firecom UH-20 headset. | $456 |
| 7900-0100 | A 9000 lb Warn multi-mount (portable) electric reversible winch with 125' of 5/16'' galvanized aircraft type cable and a replaceable clevis hook shall be installed and shall be controlled with a 12' remote control switch. | $1,857 |

| Item No. | Description | |
|---|---|---|
| 7900-0101 | Medical glove box. Shipped loose. Includes slotted top for dispensing gloves without opening hinged lid. Box to be same color as interior of cab. Secure lid in closed position with small butterfly latch. | $262 |
| 7900-0102 | Manual cord reel for 200' of 10/3 wire and a 20amp twist lock connection. | $737 |
| 7900-0103 | 50 foot extension cord with Battery charger recept on one end. | $170 |
| 7900-0104 | Ramsey QM8000 8000 lb portable winch | $1,618 |
| 7900-0106 | Fold down computer tray. | $684 |
| 7900-0107 | Ship spare tire(s) via common carrier to customer location. | $156 |
| 7900-0108 | Quartz light MagnaFire 750W/120V model KR-SB-836-TM-I with external mount tripod telepole. Shipped loose. | $1,279 |
| 7900-0120 | HeartStart OnSite Automated External Defibrillator. Unmounted. | $2,134 |
| 7900-0128 | Flashlight with LED bulb mounted charger. | $137 |
| 7900-0133 | Wabco diagnostic software - provided at delivery. | $119 |
| 7900-0135 | Vest traffic safety orange nylon mesh. | $15 |
| 7900-0143 | Monitor Akron 3416 Apollo Single Inlet Portable and Deck Monitor 4" Storz Ground Base and Truck mounting flange only. | $3,794 |
| 7900-0144 | TFT XFC 52 Package Crossfire Monitor SAFE-TAK Storage Bracket MasterStream Quad Stack Tips Stream Straightener. | $4,789 |
| 7900-0147 | Map pockets 14 gauge stainless steel (PR). Includes vinyl trim around top of opening and nylon strap with snap to retain contents. Ship loose | $383 |
| 7900-0150 | One (1) 24' two section fiberglass extension ladder shall be supplied. | $998 |
| 7900-0154 | Map Box Rectangular Short. | $507 |
| 7900-0155 | Junkin model JSA-300PCW stokes basket. Ship loose. | $798 |
| 7900-0156 | Multiplex adapter kit. Includes 6' harness with 9 pin plug/Deutsch ends and a USB to CAN interface module. | $307 |
| 7900-0157 | Junction box Circle-D with four (4) 3-wire NEMA L5-20 110 volt 20 amp twist lock receptacles. Includes 3' pig tail with 20A TL connector. | $756 |
| 7900-0158 | Junction box Circle-D with (2) 15 amp straight blade and (2) 20 amp twist lock receptacles. Includes 3' pig tail with 20 amp twist lock connector. | $955 |
| 7900-0159 | Junction box Circle-D with (2) 15 amp straight blade and (2) 20 amp twist lock receptacles. Includes 20 amp twist lock inlet connector. | $955 |
| 7900-0166 | Computer Panasonic Toughbook 30. | $5,138 |
| 7900-0167 | Junction box Circle-D with (1) 20 amp straight blade and (3) 20 amp twist lock receptacles. Includes 3' pig tail with 20 amp twist lock connector. | $955 |
| 7900-0170 | Zico helmet holder model UHH-1 (EA). Ship loose. | $63 |
| 7900-0171 | Cummins Quick Check 5200 Kit. Ship loose. | $1,873 |
| 7900-0172 | 28" orange traffic cone with (2) reflective stripes. | $58 |
| 7900-0173 | Junction box Woodhead with four (4) NEMA L5-15 110 Volt 15 Amp twist lock receptacles. Includes 12" pig tail with 20A TL connector. | $1,503 |
| 7900-0174 | Map Box with Angle Storage. Finish to match cab interior. Ship loose. | $507 |
| 7900-0175 | Map box suspended with officer's map storage without mounting angles. Finish to match cab interior. Ship loose. | $709 |
| 7900-0178 | Generator Honda 2KW model EU2000iA with 1.6KW continuous output. Shipped loose. | $1,612 |
| 7900-0179 | Akron Apollo (3416) Ground Mount and truck mounting flange Pyrolite stream shaperand stacked tips base to have single 4" FNST inlet. | $3,853 |
| 7900-0180 | Cascade model CT-PSS1 one piece tapered stainless steel Pro Series stokes basket. Ship loose. | $1,296 |
| 7900-0181 | Removable Aluminum Speedlay Tray with slotted floor to prevent the accumulation of water and allow for ventilation of wet hose. This is an additional tray to be shipped loose with the truck. | $612 |
| 7900-0182 | Removable Poly Speedlay Tray(s). The floor of the tray(s) to be slotted to prevent the accumulation of water and allow for ventilation of wet hose. This is in addition to the standard speedlay trays and are to be shipped loose. | $560 |
| 7900-0183 | Sign plate smooth 30"x30" shipped loose. Color: Job Color | $244 |
| 7900-0193 | Junction box Circle-D 3-wire 110V with (2) 20 amp straight blade and (2) 30 amp twist lock receptacles. Includes 12" pig tail with 30 amp twist lock connector. | $955 |
| 7900-0194 | Tags - Innovative Controls. (7) tags labeled as follows: (5) SCBA Cylinder (1) O2 Cylinder and (1) 5lb Dry Chem. | $103 |
| 7900-0197 | Map box suspended with drop-down doors. 34"W x 9.50"H x 12"D. Shipped loose. Map box to be Zolatone gray. | $588 |
| 7900-0203 | Junction box Circle-D with (3) NEMA 5-20 120V GFCI duplex and (1) NEMA L6-20 220V twist lock receptacle. Includes 3' pig tail with L14-30P TL connector. Shipped loose. | $955 |
| 7900-0206 | Junction box Akron with (4) 5-15 120v 15 Amp duplex recepts. Includes 12" pigtail with Hubbel L5-20 connector. Ship loose. | $698 |
| 7900-0207 | FireCom wireless headset. One (1) model UHW-51 (intercom ordered separately). | $815 |
| 7900-0208 | FireCom wireless headset. One (1) model UHW-54 (intercom ordered separately). | $815 |
| 7900-0209 | FireCom slotted dome headset. One (1) model UH-51S (intercom ordered separately). | $519 |

| Item No. | Description | |
|---|---|---|
| 7900-0210 | FireCom headset. One (1) model UH-51 (intercom ordered separately). | $519 |
| 7900-0211 | FireCom headset. One (1) model UH-52 (intercom ordered separately). | $519 |
| 7900-0212 | FireCom wireless headset. One (1) model UHW-52 (intercom ordered separately). | $815 |
| 7900-0214 | FireCom slotted dome headset for wireless intercom. One (1) model UH-51S and one (1) model BP5-10 plug in belt pack to provide wireless headset functionality (intercom ordered separately). | $1,067 |
| 7900-0215 | FireCom headset. One (1) model UH-54 (intercom ordered separately). | $519 |
| 7900-0216 | Nederman exhaust transmitter. Shipped loose | $915 |
| 7900-0217 | Wheel Chocks 32" NFPA Compliant - Pair of Zico AC-32. Up to 32" diameter tires. | $294 |
| 7900-0218 | Wheel chocks 44" NFPA complaint pair (PR) of Zico SAC-44. Up to 44" diameter tires. | $621 |
| 7900-0222 | Diagnostic software for Allison transmission. | $1,169 |
| 7900-0223 | Front and rear wheel trim kit (ship loose). Includes Real Wheels stainless steel "Cover-Up" covers with E-ONE logo for front IFS and rear tandem axle. | $1,158 |
| 7900-0224 | Light Fire Research Spectra LED 110V portable model SPA700-K20-703-ON. Location(s): shipped loose. | $2,549 |
| 7900-0225 | Bostrom SecureAll mechanical air pack bottle bracket (EA) (included in loose equipment). | $525 |
| 7900-0226 | Junction box Akron with four (4) 3-wire Nema L5-20 110Volt 20 Amp twist lock receptacles. Includes 12" pigtail with L5-20 connector. Ship loose. | $698 |
| 7900-0228 | V-MUX Electrical system diagnostic kit. | $885 |
| 7900-0229 | Zinc Plated Strainer Basket 6" | $254 |
| 7900-0231 | Additional set of pump panel tags. | $195 |
| 7900-0232 | Hosebed divider(s) short. To run above enhanced extended body to the rear of hose bed approximately 17" long x 22.25" high. Divider(s) to be shipped as loose equipment. | $81 |
| 7900-0233 | Setcom headset. One (1) model CSB-900 radio transmit capable (intercom system ordered separately). | $515 |
| 7900-0234 | Setcom headset. One (1) model CSB-901 intercom only (intercom system ordered separately). | $515 |
| 7900-0235 | Setcom wireless headset with base. One (1) model CSB-900W3 radio transmit capable (intercom system ordered separately). | $1,111 |
| 7900-0236 | Setcom wireless headset with base. One (1) model CSB-901W3 intercom only (intercom system ordered separately). | $1,111 |
| 7900-0237 | Junction box with 2' pigtail. Daniel Woodhead with two (2) NEMA L5-20 110V 20A twist lock and two (2) NEMA 5-20 110V 20A duplex receptacles. Includes 2' pigtail wired direct with a male L5-20 plug. Shipped loose. | $1,416 |
| 7900-0240 | Junction box Akron with two (2) 5-20 120v 20 Amp straight blade duplex receptacles and two (2) L5-20 120v 20 Amp twist lock receptacles. Each receptacle shall be equipped with individual 20A breakers a spring-loaded snap cover and marked in white lettering with that receptacles voltage and ampere rating. All electrical receptacles plugs and snap type weatherproof covers shall be UL Listed components. 12" Pigtail that includes wire mesh cord grip with a L14-20 connector. Ship loose. | $698 |
| 7900-0242 | Junction box Circle-D with four (4) 3-wire Nema 5-20 110Volt 20 Amp duplex household receptacles. Includes 3' pig tail with 20A TL connector. | $756 |
| 7900-0243 | Exhaust end chrome plated. Due to high heat from current emission exhaust systems dis-coloring of exhaust end may occur after prolonged use. Ship Loose. | $267 |
| 7900-0244 | Removable Poly Speedlay Tray(s). The floor of the tray(s) to be slotted to prevent the accumulation of water and allow for ventilation of wet hose. Ship loose. | $560 |
| 7900-0245 | Junction box Circle-D with three (3) L5-20 120v 20 Amp twist lock receptacles and one (1) 5-20 120v 20 Amp straight blade duplex receptacle. A Circle-D model PF51G four outlet electrical junction box shall be provided and shall have an integral pilot light to indicate electrical current. Each receptacle shall be equipped with individual 20A breakers. 12" Pigtail with a L14-20 4 wire connector. Ship loose. | $955 |
| 7900-0246 | Removable aluminum speedlay tray(s)for 1.75" DJ hose. The floor of the tray(s) to be slotted to prevent the accumulation of water and allow for ventilation of wet hose. This is in addition to the standard speedlay trays and are to be shipped loose. | $612 |
| 7900-0247 | Speedlay tray loose equipment - removable. Tray includes a 1.25" extruded alum handle low on each end of tray and slots down each side to facilitate lifting. The floor of the tray shall have poly slides and be slotted to prevent the accumulation of water and allow for ventilation of wet hose. | $611 |
| 7900-0248 | Pro-Link hand held diagnostic kit. Cummins engine. | $4,881 |
| 7900-0250 | TFT XFC 52 Package Crossfire Monitor SAFE-TAK Storage Bracket MasterStream Quad Stack Tips Stream Straightener | $4,789 |
| 7900-0253 | Junction box Circle-D with (2) 3-wire NEMA L5-20 110V 20A twist lock receptacles and (2) 3-wire NEMA 5-20 110V 20A household receptacles. Includes 3' pig tail with 20A TL connector. | $756 |
| 7900-0255 | Floodlight Whelen PFP2AC 110V powder coated black with external mount 50" tripod telepole. Requires 110V receptacle shipped loose. | $3,273 |
| 7900-0257 | Soft Suction Hose 15ft 6" with 6" long handle female swivel coupler on one end and a 4.5" long handle female swivel coupler on the other end. | $1,307 |
| 7900-0258 | Spotlight Optronics Blue Eye model KB4003 hand held. Ship loose. | $237 |

| Item No. | Description | |
|---|---|---|
| 7900-0259 | Removable aluminum speedlay tray(s)for 1.75" DJ hose. Tray includes a 1.25" extruded alum handle low on each end of tray and slots down each side to facilitate lifting. The floor of the tray shall have poly slides and be slotted to prevent the accumulation of water and allow for ventilation of wet hose. This is in addition to the standard speedlay trays and are to be shipped loose. | $611 |
| 7900-0260 | Junction box Circle-D with (2) 15 amp straight blade and (2) 15 amp twist lock receptacles. Includes 3' pig tail with 20 amp twist lock connector. | $955 |
| 7900-0262 | Additional set of cargo net covers for rear facing medical cabinet opening(s). | $211 |
| 7900-0263 | Storz 4" mount bracket to be located and mounted at final inspection. | $125 |
| 7900-0265 | 2100 Gallon Aluminum frame portable folding tank. FDTA 2100 H2 alum w/22 oz. sides and 32 oz. Ship with unit stored in storage tank rack. Color to be yellow. | $1,765 |
| 7900-0266 | Cup holder / tray for engine cover painted to match cab interior. Approx 14" wide x 10" long with tapered front corners and cup holders at each rear corner. For use in Typhoon and CII with severe duty engine cover. Ship loose. | $417 |
| 7900-0273 | Junction box Circle-D with four (4) 3-wire NEMA L5-15 110 volt 15 amp twist lock receptacles. Includes 12" pig tail with 15A TL connector. | $756 |
| 7900-0274 | Junction box Circle-D with (2) 20 amp straight blade and (2) 20 amp twist lock receptacles. Includes 12" pig tail with 20 amp Daniel Woodhead twist lock connector. | $955 |
| 7900-0275 | TFT AB3ST-NX Intake Valve 6"NST x 5" Storz With Cap | $2,083 |
| 7900-0277 | Wheel chocks 44" NFPA compliant pair (PR) of Zico AC-44. Up to 44" diameter tires. | $540 |
| 7900-0283 | David Clark battery pack (4). | $326 |
| 7900-0285 | Junkin model JSA-200 stokes basket. Ship loose. | $974 |
| 7900-0288 | Junction box Circle-D with (4) 3-wire NEMA 5-15 110V 15A household receptacles. Includes 3' pig tail with 20A straight blade connector. | $756 |
| 7900-0290 | Removable Aluminum Speedlay Tray with slotted floor to prevent the accumulation of water and allow for ventilation of wet hose. Includes vertical slotted hand hold cutouts on each end in place of extruded grab handle and no lip on either end to facilitate easy removal of hose. This tray is in addition to the standard and shall be shipped loose with the truck. | $611 |
| 7900-0291 | FireCom model UHW505 under helmet wireless radio transmit headset. | $1,100 |
| 7900-0292 | Floor mounted Slide Master with tray. Model SMEX w/ 120% extension. 1/2 depth transverse or full depth on non transverse. Design for mounting in compartment L4 to be shipped loose with truck. | $1,686 |
| 7900-0293 | Sight Level Tube for Water Tank Level. | $65 |
| 7900-0294 | Removable Aluminum Speedlay Tray(s) with slotted floor to prevent the accumulation of water and allow for ventilation of wet hose. Includes vertical slotted hand hold cutouts on each end to facilitate easy removal of the hose tray. This is in addition to the standard speedlay trays and are to be shipped loose. | $611 |
| 7900-0295 | FireCom model UHW503 under helmet wireless intercom only headset. | $1,072 |
| 7900-0298 | Junction box Akron with (2) 5-20 125v 20 Amp duplex recepts and (2) L5-20 125v 20 Amp twist lock recepts. Includes 12" pigtail with Daniel Woodhead L5-20 connector and rubber feet. Shipped loose. | $596 |
| 7900-0299 | TFT Crossfire model XFT-NJ monitor with master stream 1250 nozzle. Include truck mount adapter. | $4,688 |
| 7950-0022 | Front axle wheel trim kit. Includes stainless steel lug nut covers (chrome plated plastic if applicable) and center cap with E-ONE logo. Note: Center cap will have an inspection port IPO a logo if equipped with Stemco oil seals. | $253 |
| 7950-0023 | Rear axle (single) wheel trim kit. Includes stainless steel lug nut covers (chrome plated plastic if applicable) and center cap with E-ONE logo. E-ONE custom chassis w/steel wheels will have chrome plated plastic lug covers. | $312 |
| **PAINT, STRIPING, LETTERING** | | $0 |
| 8100-0065 | Paint chassis frame rails springs cross-members fire pump drivelines fuel and air tanks axles front bumper extensions with brackets and front suction piping (if applicable) shall be painted: [#COL]. | $1,941 |
| 8100-0070 | Paint valve ends job color. | $494 |
| 8100-0071 | Undercoating E-ONE. | $303 |
| 8100-0072 | Touch up paint (1) pint. Dupont paint job color. | $96 |
| 8100-0084 | All applicable pump/pre-connect application modules are to have a job color finish. Includes upper and lower pump modules crosswalk module and/or speedlay/pre-connect module (as applicable). Rear mounted body/pump module to be painted job color. | $632 |
| 8100-0088 | Painted trim stripe on chassis wheels (per axle). Color to be: [#COL]. | $184 |
| 8100-0092 | Paint entire rear of body job color. Stainless steel bodies only. | $2,261 |
| 8100-0096 | Paint rear tow eye assemblies job color IPO black. | $287 |
| 8100-0097 | Paint the pump job color. | $604 |
| 8100-0100 | Special paint break. See sketch / drawing / photo in sales file. | $200 |
| 8100-0102 | Chassis axle ends to be painted job color. | $317 |
| 8100-0108 | Front wheels to be painted on the inboard side (same color as outboard side). | $325 |

| Item No. | Description | |
|---|---|---|
| 8100-0109 | Rear wheels (4) to be painted on the inboard side (same color as outboard side). Includes outboard side of the inboard wheels. | $649 |
| 8100-0115 | Paint valve ends 767681EG Black. | $494 |
| 8100-0117 | Paint cab/body with approved metallic paint color. | $2,854 |
| 8100-0168 | All rearward facing access door(s) and pump//bleeder panel(s) to be painted job color. | $965 |
| 8100-0170 | Painted Stripe - 6" wide with "Z". Stripe straight on front sides and rear of cab and body. "Z" location to be specified by customer. Color: [#COL]. Location: [#LOC]. | $4,646 |
| 8100-0172 | Paint body two tone color. Paint break will be just above door drip rail. DuPont paint. Color: [#COL]. | $2,003 |
| 8100-0173 | Paint mid-mount boom body module job color. | $992 |
| 8100-0176 | Paint E-ONE chassis cab - Sikkens paint. Color: [#COL]. | $5,778 |
| 8100-0177 | Paint cab Sikkens two-tone. Upper area of cab to be painted [#COL]. | $1,302 |
| 8100-0181 | Paint body two-tone color - Sikkens paint: Color: [#COL]. | $2,003 |
| 8100-0182 | Paint Body - Small - For Pumpers Rear Mounts S/A Tankers/Wetsides and Rescues. Sikkens paint. Color: [#COL]. | $1,779 |
| 8100-0183 | Paint Body - Large - For Aerials T/A Tankers/Wetsides Rear Mounts and Rescues. Sikkens paint. Color: [#COL]. | $4,404 |
| 8100-0184 | Paint body stainless steel -Small. Sikkens paint. Color: [#COL]. | $5,410 |
| 8100-0188 | Durabak coating for all cab and body handrails. | $1,479 |
| 8100-0222 | Paint all roll up door header plate(s) job color. | $817 |
| 8100-0223 | The pump/ladder/hardsuction access door and recessed box for directional lightbar to be painted job color. | $320 |
| 8100-0225 | Paint the pump. Color: [#COL]. | $604 |
| 8100-0226 | Medical cabinet exterior roll-up door two-tone paint adjustment (EA). Includes dis-assembly/re-assembly of existing two-tone roll-up door to match cab paint break. | $481 |
| 8100-0227 | Standard paint process for the exterior of stainless steel bodies. Sikkens paint. Color: [#COL]. | $1,779 |
| 8100-0228 | FRP painted exterior panels IPO standard paint process for stainless steel bodies. Available only on stainless steel pumper bodies that have roll-up doors. Provides a credit versus the standard painting process. Sikkens paint. Color: [#COL]. | -$3,828 |
| 8100-0231 | Undercoating E-One chassis only. | $226 |
| 8100-0233 | FRP painted exterior panels IPO standard paint process for stainless steel bodies. Available only on stainless steel rescue pumper bodies that have roll-up doors. Provides a credit versus the standard painting process. Sikkens paint. Color: [#COL]. | -$3,828 |
| 8100-0361 | Rear body surface to have a painted job color finish. Includes hinged doors that do not have discrete sales codes and removable panels. | $899 |
| 8100-0362 | Paint body two tone color. Paint break will be just above the body compartment top. Sikkens paint. Color: [#COL]. | $2,003 |
| 8100-0372 | Paint cab two-tone with approved metallic flake paint color. | $714 |
| 8100-0373 | Front cab grille mesh painted FLNA4001 white with [#COL] painted letters. Sales to provide detail of letters to provide. | $623 |
| 8100-0375 | LizardSkin under cab insulation. Includes all exterior under cab surfaces exposed to interior crew compartment. | $3,296 |
| 8100-0376 | Side facing extrusions of pump module to have swirled finished. | $180 |
| 8100-0382 | Interior of front bumper trays and running board suction trays to be painted with black Durabak. Includes driver side officer side and center front bumper trays. Driver side and officer side running board suction trays. | $623 |
| 8100-0383 | Paint Newton Dump job color. | $538 |
| 8100-0385 | Outline for painted letter on cab grille (EA) - 18". CIIX cabs only. Color: [#COL]. | $134 |
| 8100-0388 | Chassis fuel tank to have undercoating applied prior to installation on frame. | $212 |
| 8100-0394 | Paint body two-tone color. Paint break will be just above the body compartment opening. Sikkens paint. Color: [#COL]. | $2,003 |
| 8100-0398 | Paint swivel chute job color. | $667 |
| 8100-0401 | Paint front and rear axle hubs primary job color. | $1,369 |
| 8100-0403 | Black Durabak coating on fuel tank. | $428 |
| 8100-0406 | Paint foam discharge and intake valves [#COL]. | $494 |
| 8100-0410 | Black Durabak coating on pump master drain bracket. | $50 |
| 8100-0412 | Zolatone finish gray in color for the upper pump module on the officer side where the E-ONE logo is mounted. | $193 |
| 8100-0413 | Front cab grille mesh painted FLNA4006 white with [#COL] painted letters. Sales to provide detail of letters to provide. | $623 |
| 8100-0416 | Front cab grille mesh painted with the waving United States flag. | $1,592 |
| 8100-0421 | Paint air conditioning condenser cover. Color: [#COL]. | $815 |
| 8100-0424 | Front cab grille mesh painted with the waving Maryland flag. | $1,592 |
| 8100-0426 | The driver and officer side roof top compartment interiors shall be painted Scorpion Black (smooth finish). | $603 |

| Item No. | Description | |
|---|---|---|
| 8100-0431 | Brow light brackets (not housing) shall be painted [#COL]. This shall include forward rear and side facing if so equipped. | $180 |
| 8100-0436 | All applicable pump/pre-connect application modules are to have a job color finish. Paint the entire pump module inside and outside before loading onto the chassis. | $1,260 |
| 8100-0439 | Painted crosswalk area to include all smooth plate and flat extruded surfaces exposed to the exterior forward and rearward of the crosswalk area. | $632 |
| 8100-0447 | FRP painted exterior panels IPO standard paint process for stainless steel bodies. Available only on stainless steel ValueONE bodies that have roll-up doors. Sikkens paint. Color: [#COL]. | $3,753 |
| 8100-0448 | FRP painted exterior panels IPO standard paint process for stainless steel bodies. Available only on stainless steel tanker bodies that have roll-up doors. Provides a credit versus the standard painting process. Sikkens paint. Color: [#COL]. | -$5,022 |
| 8100-0449 | Rear inboard wheels (2) to be painted on the outboard side (same color as outer wheels). Allowing for wheels to be rotated on the rear axle. | $324 |
| 8100-0456 | Paint all applicable roll up door header plate(s) 2-tone job color. | $817 |
| 8100-0457 | Paint body two-tone color - Sikkens paint. Locate at the bottom of roll-up door header. Color: [#COL]. | $2,003 |
| 8100-0458 | Special paint break body two-tone color - Sikkens paint: Color: [#COL]. See sketch / drawing / photo in sales file. | $2,003 |
| 8100-0459 | The ground ladder brackets pike pole tubes and folding ladder trough to be painted job color. | $667 |
| 8100-0460 | Paint pump module two tone inline with body. | $225 |
| 8100-0467 | Paint chassis frame rails springs cross-members fire pump drivelines air tanks axles front bumper extensions with brackets and front suction piping (if applicable) shall be painted: [#COL]. Does not include fuel tank. | $1,941 |
| 8100-0468 | FRP painted exterior panels replacement set for stainless steel tanker bodies. Provides the standard painting process on the panels. Sikkens paint. Color: [#COL]. | $2,448 |
| 8100-0472 | Paint intake valve ends 767681EG Black. (DO NOT PAINT PLUGS & SWIVELS) | $248 |
| 8100-0473 | Front cab grille mesh painted with the waving Canadian flag. | $1,592 |
| 8100-0476 | Brackets painted Durabak black. Includes rear aerial style brackets rear camera cover. | $180 |
| 8100-0477 | Paint front cab grille upper two tone job color. | $686 |
| 8100-0479 | SCBA doors on the rear body wheel well panels to be painted to match the body color. | $283 |
| 8100-0480 | Upper panels rearward of upper module storage compartment to be aluminum smooth plate painted job color. | $250 |
| 8100-0481 | Black Linex coating on top of the of standard diamond plate: Install on; Pump panel running boards body compartment tops enhanced extended compartment steps and rear tailboard. | $3,461 |
| 8100-0488 | Paint rear tow eye assemblies yellow IPO black. | $287 |
| 8100-0491 | Front cab grille mesh painted FLNA4145 black with [#COL] painted letters. Sales to provide detail of letters to provide. | $623 |
| 8100-0498 | Paint upper FRP body panels two-tone color. Paint break will be just above the body compartment opening. Sikkens paint. Color: FLNA9550 Dark Grey Metallic | $541 |
| 8100-0499 | The hard suction storage tray(s) to be painted FLNA 9550 Dark Grey Metallic. | $192 |
| 8100-0506 | Paint all plumbing black. Pump valves and piping. | $1,131 |
| 8100-0509 | Rear body FRP panels to be painted. | $248 |
| 8100-0515 | Paint front tow eye and rear frame mounted tow eye assemblies job color IPO black. | $353 |
| 8100-0518 | Paint all body compartment drip rails (hinged and/or rollup door) job color. | $817 |
| 8100-0520 | Front cab grille mesh painted with the non-waving Maryland flag. | $1,592 |
| 8100-0521 | Paint Commercial OEM step package exposed hardware and hardware used to install trim package flat black. For use with coated trim packages (Line-X or similar) Prep and paint all exposed hardware or unpainted brackets on the trim package as well as the OEM step packaging on commercial chassis. To be painted as a final step after trim package is installed. | $208 |
| 8100-0522 | Paint front tow eye assemblies job color IPO black. | $204 |
| 8100-0523 | Paint rear 3-way receiver assembly job color IPO black. | $485 |
| 8100-0524 | Paint L1 roll up door header plate job color. | $117 |
| 8100-0525 | Paint air tanks the following colors; Wet tank: Yellow Primary: Orange Secondary: Green Auxiliary: Black. | $469 |
| 8100-0526 | Paint front and rear axle hubs upper two-tone job color. | $1,369 |
| 8100-0527 | Front cab grille mesh painted with the non-waving United States flag. | $1,592 |
| 8100-0529 | Hose bed interior side walls and hose bed dividers to be painted to match the body color. | $666 |
| 8100-0534 | Paint all roll up door header plate(s) and side tracks job color. | $1,020 |
| 8100-0535 | Front cab grille mesh painted FLNA3626 Red with [#COL] painted letters. Sales to provide detail of letters to provide. | $623 |
| 8100-0536 | SCBA and fuel fill doors on the rear body wheel well panels to be painted to match the body color. | $283 |
| 8100-0538 | Paint break painted on chassis stripe - 1/2" Wide - [#COL].To be located 1" above existing paint break if so equipped or at the same approximate position (when there is not a paint break). | $1,412 |

| Item No. | Description | |
|---|---|---|
| 8100-0539 | Paint break painted on body stripe - 1/2" Wide - [#COL].To be located 1" above existing paint break if so equipped or at the same approximate position (when there is not a paint break). | $1,886 |
| 8100-0544 | Paint pump anode(s)exterior side as located in fire pump yellow for easy location identification during inspections. | $94 |
| 8100-0545 | Front cab grille mesh painted FLNA4040 white with [#COL] painted letters. Sales to provide detail of letters to provide. | $623 |
| 8100-0549 | Paint air tanks the following colors; Wet tank: Black Primary: Green Secondary: Blue and Aux.: Yellow. | $469 |
| 8100-0551 | Grille mesh painted. The cab front grille mesh shall be painted. See sketch / drawing / photo in sales file. | $1,592 |
| 8100-0555 | Paint break painted on chassis stripe - 1/8" Wide - [#COL].To be located 1/4" below existing paint break chassis stripe if so equipped or at the same approximate position (when there is not a paint break). | $1,412 |
| 8100-0556 | Paint Body - Small upper roof storage box. QTY (each) - For Mini Pumpers & Rescues. Does not include hardware. Sikkens paint. Color: [#COL]. | $859 |
| 8150-0012 | The interior of the backboard storage compartment to be painted OTO gray. Includes inside surfaces of backboard doors and upper cover plate. | $632 |
| 8150-0021 | The interior of the backboard storage compartment to be painted Zolatone gray. Includes inside surfaces of backboard doors and upper cover plate. | $632 |
| 8150-0023 | Interior cab handrails/window bars painted safety yellow. | $236 |
| 8150-0025 | LINE-X package for Cab Interior see specification for details. Cab door panels steps and step wells are not included in this package. | $1,068 |
| 8150-0028 | The interior of the cab to be have black Scorpion polyurethane coating. | $505 |
| 8150-0031 | The cab interior shall have gray finish. Note: Gray Line-X finish is prone to fading and might change color over time. | $839 |
| 8150-0032 | The body compartment interior (and mounted components if applicable package is selected) shall have gray finish. Note: Gray Line-X finish is prone to fading and might change color over time. | $839 |
| 8150-0033 | LINE-X package for Deluxe Cab Interior see specification for details. Steps and step wells are not included in this package. | $2,074 |
| 8200-0000 | Scotchlite Letter (Each) - 3". Color [#COL]. | $11 |
| 8200-0001 | Scotchlite Letter (Each) - 6". Color [#COL]. | $12 |
| 8200-0002 | Scotchlite Letter (Each) - 9". Color [#COL]. | $13 |
| 8200-0003 | Scotchlite Letter (Each) - 12". Color [#COL]. | $13 |
| 8200-0004 | Scotchlite Letter (Each) - 15". Color [#COL]. | $15 |
| 8200-0005 | Scotchlite Letter (Each) - 18". Color [#COL]. | $17 |
| 8200-0006 | Maltese cross 12" (Pair). | $1,167 |
| 8200-0007 | Sign Gold Letter (Each) - 3". | $14 |
| 8200-0008 | Sign Gold Letter (Each) - 6" | $20 |
| 8200-0009 | Sign Gold Letter (Each) - 9" | $31 |
| 8200-0010 | Sign Gold Letter (Each) - 12" | $31 |
| 8200-0011 | Scotchlite Letters (60) - 3". Color [#COL]. | $787 |
| 8200-0012 | Sign Gold Letters (60) - 3". | $1,144 |
| 8200-0013 | Shade for lettering. | $6 |
| 8200-0014 | Sign "Stay Back 500FT" with black reflective lettering. Locate below rear of body. | $139 |
| 8200-0015 | White reflective tape on (2) outriggers. | $228 |
| 8200-0018 | Scotchlite Letters (90) - 3". Color [#COL]. | $982 |
| 8200-0019 | Scotchlite Letters (120) - 3". Color [#COL]. | $1,176 |
| 8200-0020 | Sign Gold Letters (90) - 3". | $1,523 |
| 8200-0021 | Sign Gold Letters (120) - 3". | $1,897 |
| 8200-0022 | Shade and outline for lettering. | $7 |
| 8200-0024 | Reflexite Letter (Each) - 18". [#COL] Reflexite letter(s) stitched to vinyl hosebed cover end flap. | $69 |
| 8200-0025 | Reflexite Letter (Each) - 6". [#COL] Reflexite letter(s) stitched to vinyl hosebed cover end flap. | $39 |
| 8200-0026 | Die cut letter in stripe (EA). | $26 |
| 8200-0027 | Scotchlite Letter (Each) - 5". Color [#COL]. | $12 |
| 8200-0028 | Sign Gold Letter (Each) - 5" | $20 |
| 8200-0029 | Scotchlite Letter (Each) - 10". Color [#COL]. | $14 |
| 8200-0030 | Sign Gold Letter (Each) - 10" | $31 |
| 8200-0031 | Scotchlite Letter (Each) - 30". Color [#COL]. | $21 |
| 8200-0032 | Scotchlite letter each 24" [#COL]. | $19 |
| 8200-0033 | Scotchlite letter (each) - 8". Color [#COL]. | $14 |
| 8200-0036 | Scotchlite Letter (Each) - 4". Color [#COL]. | $12 |
| 8200-0038 | Reflexite Letter (Each) - 12". [#COL] Reflexite letter(s) stitched to vinyl hose bed cover end flap. | $55 |
| 8200-0039 | Maltese Cross SignGold up to 18'' dia (PR) with new layout. | $1,052 |
| 8200-0040 | Gold leaf letters (90) - 3". | $3,799 |

| Item No. | Description | |
|---|---|---|
| 8200-0042 | Gold leaf lettering and corner scroll package. Package contains (112) 3" gold leaf letters and (4) E-One style golf leaf corner scrolls. Corners scrolls located on forward upper corners of L3/R3 doors and rearward upper corners of L5/R5 doors. | $4,734 |
| 8200-0044 | Reflexite Letter (Each) - 8". [#COL] Reflexite letter(s) stitched to vinyl hosebed cover end flap. | $46 |
| 8200-0045 | Gold leaf letters (120) - 3". | $4,421 |
| 8200-0046 | Scotchlite Letter (Each) - 27". Color [#COL]. | $20 |
| 8200-0047 | Sign Gold Letter (Each) - 4" | $16 |
| 8200-0048 | Sign Gold Letters (120) - 4". | $2,333 |
| 8200-0052 | Sign Gold Letter (Each) - 8" | $31 |
| 8200-0056 | Reflexite Letter (Each) - 8". White Reflexite letter(s) stitched to vinyl hosebed cover end flap and top of hosebed cover. Lettering Instructions: NMFD E-2 | $46 |
| 8200-0061 | Scotchlite Letter (Each) - 2". Color [#COL]. | $9 |
| 8200-0068 | Painted letter on cab grille (EA) - 18". Color: [#COL]. | $134 |
| 8200-0073 | Sign Gold Letter (Each) - 3". Sign Gold to be small turn style. | $17 |
| 8200-0074 | Maltese Cross SignGold up to 15" dia (PR) with new layout. | $847 |
| 8200-0075 | Reflexite Letter (Each) - 10". [#COL] Reflexite letter(s) stitched to vinyl hose bed cover end flap. | $50 |
| 8200-0081 | Etched Vinyl Letter (Each) - 5" | $20 |
| 8200-0084 | Scotchlite Letter (Each) - 1". Color [#COL]. | $9 |
| 8200-0086 | Sign Gold Letter (Each) - 16". | $37 |
| 8200-0088 | Gold leaf letter (Each) - 4". | $71 |
| 8200-0089 | Gold leaf letters (EA) - 3". | $44 |
| 8200-0090 | Sign Silver Letter (Each) - 3" | $14 |
| 8200-0091 | Sign Silver Letter (Each) - 12" | $31 |
| 8200-0098 | Scotchlite letter each 20" [#COL]. | $18 |
| 8200-0100 | Sign Gold Letter (Each) - 2". | $14 |
| 8200-0107 | Sign Silver Letter (Each) - 6" | $20 |
| 8200-0108 | Install customer supplied lettering. Location: Front cab door. | $91 |
| 8300-0002 | NFPA Scotchlite Stripe - 4" wide and straight on front/sides of cab and sides/rear of body. Color: [#COL]. Location: [#LOC]. | $752 |
| 8300-0003 | NFPA Scotchlite Stripe - 6" wide and straight on front/sides of cab and sides/rear of body. Color: [#COL]. Location: [#LOC]. | $760 |
| 8300-0006 | NFPA Scotchlite Stripe - 6" wide with "Z". Stripe straight on front sides and rear of cab and body. "Z" location to be specified by customer. Color: [#COL]. Location: [#LOC]. | $1,202 |
| 8300-0008 | NFPA Scotchlite Stripe - 5" wide with "S". Stripe straight on front sides and rear of cab and body. "S" location to be specified by customer. Color: [#COL]. Location: [#LOC]. | $1,341 |
| 8300-0009 | NFPA Scotchlite Stripe - 5" wide with double "S". Stripe straight on front sides and rear of cab and body. Double "S" locations to be specified by customer. Color: [#COL]. Location: [#LOC]. | $1,641 |
| 8300-0011 | Scotchlite stripe (PR) 1/2" located 1/2" above and below existing stripe. Color: [#COL]. | $560 |
| 8300-0012 | Scotchlite stripes (4) 1/2" located (2) above and (2) below existing stripe. Stripes to be spaced 1/2" apart. Color: [#COL]. | $1,112 |
| 8300-0013 | NFPA Scotchlite Stripe - 2" and 4" wide with "Z". Stripe straight on front sides and rear of cab and body. "Z" location to be specified by customer. 2" above 4" with 1" gap between stripes. Color: [#COL]. Location: [#LOC]. | $1,697 |
| 8300-0016 | Paint Break Sign Gold Chassis Stripe - 3/4" Wide - Black Gold Black. To be located above existing paint break. | $263 |
| 8300-0018 | Sign gold scroll for body door with shade (Ea). Location: [#LOC] | $185 |
| 8300-0019 | Sign gold scroll for body door (Ea). Location: [#LOC] | $60 |
| 8300-0024 | Red/White rubrail scotchlite insert. | $218 |
| 8300-0025 | 1/4" Pin stripe above and below existing Scotchlite stripe. Color: [#COL]. | $897 |
| 8300-0026 | Scotchlite stripe 1" located 1" above and below existing stripe. Color: [#COL]. | $671 |
| 8300-0027 | NFPA Scotchlite 4" wide hockey stripe straight across front and may contour as it transitions from cab to body on each side. Color: [#COL]. Location: [#LOC]. | $903 |
| 8300-0028 | NFPA Scotchlite 6" wide hockey stripe straight across front and may contour as it transitions from Cab to Body on each side. Color: [#COL]. Location: [#LOC]. | $912 |
| 8300-0030 | NFPA Scotchlite 10" wide hockey stripe straight across front and may contour as it transitions from Cab to Body on each side. Color: [#COL]. Location: [#LOC]. | $1,218 |
| 8300-0032 | Chevron "A" style 4" Scotchlite striping on rear of body. Includes rear facing extrusions panels and doors inboard/outboard of the beavertails(if applicable). Colors to be [#COL]. | $3,548 |
| 8300-0033 | NFPA Scotchlite Stripe - 8" wide and straight on front/sides of cab and sides/rear of body. Color: [#COL]. Location: [#LOC]. | $939 |
| 8300-0034 | Scotchlite stripe 2" located 1" above existing stripe. Color: [#COL]. | $425 |
| 8300-0036 | NFPA Scotchlite Stripe - 8" wide with "S". Stripe straight on front sides and rear of cab and body. "S" location to be specified by customer. Color: [#COL]. Location: [#LOC]. | $1,525 |
| 8300-0037 | Chevron "V" style 4" Scotchlite striping on rear of body. Includes rear facing extrusions panels and doors inboard/outboard of the beavertails(if applicable). Colors to be [#COL]. | $3,548 |

| Item No. | Description | |
|---|---|---|
| 8300-0038 | Scotchlite stripe 2" located 1" above and below existing stripe. Color: [#COL]. | $849 |
| 8300-0039 | Scotchlite stripe 1" located .5" above and below existing stripe. Color: [#COL]. | $708 |
| 8300-0040 | Signgold border .5" for logo. | $440 |
| 8300-0043 | NFPA Scotchlite double 2" wide hockey with 1" between stripes straight across front and may contour as it transitions from Cab to Body on each side. Color: [#COL]. Location: [#LOC]. | $2,437 |
| 8300-0044 | Scotchlite stripe 1" located 1" above existing stripe. Color: [#COL]. | $354 |
| 8300-0045 | 1/4" pinstripe. Color: [#COL]. Location: At cab paint break | $197 |
| 8300-0046 | Scotchlite stripe (PR) 1/2" located directly above and below existing stripe. Color: [#COL]. | $704 |
| 8300-0048 | Paint break Scotchlite chassis stripe - 3/4" Wide - Black [#COL] Black. To be located above existing paint break. | $158 |
| 8300-0049 | Signgold body scroll package. (1) each upper corner L1 L3 R1 R3 and (1) each lower corner L2 R2 with connecting 3/4" signgold stripe. See photos on file with sales. | $2,571 |
| 8300-0050 | Scotchlite stripe (PR) 1" located directly above and below existing stripe on satin roll-up doors only. Color: [#COL]. | $560 |
| 8300-0051 | Scotchlite hockey stripe. Striping from bottom to top with no spacing between as follows: 1" white 1/4" blue 5.75" white 1/4" black 1/8" gold 1/4" black 1.375" white fading to blue at front cab corners 1/2" black 1/2" white. Location: bottom of stripes even with top of gravel shield; hockey at L1/R1. | $5,322 |
| 8300-0052 | Chevron "V" style Scotchlite striping on rear of body outboard of beavertails (if equipped). Colors to be [#COL]. | $1,052 |
| 8300-0053 | Signgold body scroll package. (1) front lower corner L2 and (1) rear lower corner L5 with connecting 3/4" signgold stripe. (4) R1 (each corner) with connecting 3/4" signgold stripe. (1) R2 lower front corner and (1) R5 lower rear corner with connecting 3/4" signgold stripe. | $1,596 |
| 8300-0056 | Chevron "A" style 4" individual Scotchlite striping on front bumper. Colors to be [#COL]. | $1,466 |
| 8300-0057 | Arched stripe 6"/2" on front cab door and blend into a straight body stripe. Includes stripe on front bumper. Color: [#COL] | $2,437 |
| 8300-0058 | Chevron "V" style 4" Scotchlite striping on rear B1 compt door (3) stripes. Colors to be red/white/black pinstripe. | $920 |
| 8300-0059 | NFPA Scotchlite Stripe - 10" wide and straight on front sides and rear of cab and body. Color: [#COL]. Location: [#LOC]. | $1,237 |
| 8300-0060 | Scotchlite Stripe - 5" wide straight on front front of cab below windshield end at radius corners. Color: [#COL]. | $251 |
| 8300-0061 | Chevron "A" style 6" individual Scotchlite striping full width on rear of body. Includes rear facing extrusions panels and doors. Colors to be [#COL]. | $1,872 |
| 8300-0062 | Chevron "A" style Scotchlite striping on rear of body outboard of beavertails (if equipped). Colors to be [#COL]. | $1,052 |
| 8300-0066 | NFPA Scotchlite Stripe - 4" wide with "Z". Stripe straight on front sides and rear of cab and body. "Z" location to be specified by customer. Color: [#COL]. Location: [#LOC]. | $1,192 |
| 8300-0067 | Chevron "A" style 4" Scotchlite striping on rear of body outside of beavertails. Colors to be [#COL]. | $1,466 |
| 8300-0068 | NFPA Scotchlite Stripe - 10" wide with "S". Stripe straight on front sides and rear of cab and body. "S" location to be specified by customer. Color: [#COL]. Location: [#LOC]. | $3,897 |
| 8300-0070 | Chevron "A" style 4" Scotchlite striping on rear of body between beavertails. Colors to be [#COL]. | $2,020 |
| 8300-0072 | NFPA Scotchlite Stripe - 10" wide with "Z". Stripe straight on front sides and rear of cab and body. "Z" location to be specified by customer. Color: [#COL]. Location: [#LOC]. | $2,052 |
| 8300-0075 | Sign gold scroll (4 ea side) for body with connecting .75" sign gold body stripe. See photo/drawing on file with sales. | $2,244 |
| 8300-0076 | Chevron "A" style 4" Scotchlite striping on rear of body between beavertails; body panels and extrusions only (No doors). Colors to be [#COL]. | $1,130 |
| 8300-0077 | Chevron "A" style Scotchlite striping on rear B1 compt door. Colors to be [#COL]. | $1,777 |
| 8300-0078 | Chevron "A" style 4" 3M "Diamond Grade" striping on rear of body. Includes rear facing extrusions panels and doors inboard/outboard of the beavertails(if applicable). Colors to be [#COL]. | $4,435 |
| 8300-0079 | Chevron "A" style 4" 3M "Diamond Grade" striping on rear pump panel/bleeder panel(s). Colors to be [#COL]. | $741 |
| 8300-0080 | Chevron "A" style 4" 3M "Diamond Grade" striping on front bumper. Colors to be [#COL]. | $1,833 |
| 8300-0081 | Chevron "A" style 3M "Diamond Grade" striping on rear of body outboard of beavertails (if equipped). Colors to be [#COL]. | $1,316 |
| 8300-0084 | Chevron "A" style 6" printed sheet Scotchlite striping full width on rear of body. Includes rear facing extrusions panels and doors. Colors to be [#COL]. | $1,461 |
| 8300-0085 | Scotchlite stripe 1" located directly above and below existing stripe. Color: [#COL]. | $671 |
| 8300-0088 | NFPA Scotchlite Stripe - 4" wide and straight on sides and rear of body only. Color: [#COL]. Location: [#LOC]. | $828 |

| Item No. | Description | |
|---|---|---|
| 8300-0089 | Gold leaf scroll and stripe package. Includes 3/4" stripes w/outline vertically on forward L1/R1 and rearward on L3/R3 body doors with connecting horizontal stripe on upper doors. Stripes to end with spear above scotchlite stripe. Custom scrolls over L2/R2 d-rings and front cab doors. 3/4" chassis stripe w/outline custom scrolls rearward and spear forward. See photos on file with sales. | $5,371 |
| 8300-0090 | Scotchlite stripe 1.5" located directly above and below existing stripe. Color: [#COL]. | $710 |
| 8300-0091 | 1/4" Scotchlite pinstripe above and below existing stripe. Color: [#COL]. | $1,023 |
| 8300-0093 | Chevron "A" style 6" printed sheet Scotchlite striping on front bumper. Colors to be [#COL]. | $603 |
| 8300-0094 | Chevron "A" style 4" Scotchlite striping on rear body panels only no extrusions. Colors to be [#COL]. | $2,662 |
| 8300-0095 | Sign Gold cab and body stripe - 3/4" wide - Black Gold Black. To be located at lower cab and body sides and contour over wheel wells (if applicable). See addtional photos on file. | $1,000 |
| 8300-0099 | Chevron "A" style 6" printed sheet Scotchlite striping on rear of body between beavertails. Colors to be [#COL]. | $1,149 |
| 8300-0101 | Black rubrail scotchlite insert. | $218 |
| 8300-0102 | Gold leaf scroll and stripe package. Includes 1/2" stripes around perimeter of driver and officer side assemblies with (4) corner scrolls each side in the corners. See sketch on file. | $5,963 |
| 8300-0103 | Chevron "A" style 6" Scotchlite striping on rear B1 compt door. Colors to be [#COL]. | $1,777 |
| 8300-0104 | Chevron "V" style 3" Scotchlite striping on rear of body. Colors to be Red/White/Blue. | $3,548 |
| 8300-0109 | Chevron "A" style 6" 3M "Diamond Grade" striping on rear of body. Includes rear facing extrusions panels and doors inboard/outboard of the beavertails(if applicable). Colors to be [#COL]. | $4,435 |
| 8300-0111 | Chevron "A" style 6" individual Scotchlite striping on rear of body except for the pump/ladder tunnel access door. Colors to be [#COL]. | $3,548 |
| 8300-0112 | Chevron "A" style 6" Scotchlite striping on rear facing side of the slide out room. Colors to be [#COL]. | $1,777 |
| 8300-0114 | Chevron "A" style 6" individual Scotchlite striping full width on rear of body. Includes rear facing compartment face extrusions panels and doors. Does not include center lower pump panel. Colors to be [#COL]. | $1,872 |
| 8300-0115 | Chevron "A" style 6" printed pattern Scotchlite striping full width on rear of body. Includes rear facing compartment face extrusions panels and doors. Does not include center lower pump panel. Colors to be [#COL]. | $1,461 |
| 8300-0116 | Chevron "A" style 6" printed pattern Scotchlite striping on the upper center pump/storage access. Colors to be [#COL]. | $457 |
| 8300-0117 | Chevron "A" style 6" individual Scotchlite striping on the upper center pump/storage access. Colors to be [#COL]. | $628 |
| 8300-0120 | Chevron "A" style 6" 3M "Diamond Grade" striping on front bumper. Colors to be [#COL]. | $1,833 |
| 8300-0125 | Reflective [#COL] striping positioned in the "A" formation located in the lower door panel (EA). Location: [#LOC]. | $74 |
| 8300-0126 | Red/White scotchlite. Locate on front of roll-out tray(s) front lip of adjustable/fixed shelves and tool board(s) on outer vertical edge on both sides. | $438 |
| 8300-0142 | Chevron "A" style 6" individual Scotchlite striping on front bumper. Colors to be [#COL]. | $753 |
| 8300-0143 | NFPA Scotchlite Stripe - three stripes 3" wide with "Z" with 1" gap between stripes. Stripe straight on front sides and rear of cab and body. "Z" location to be specified by customer. Color: top stripe - Yellow middle stripe - White bottom stripe - Black. Location: top of bottom stripe flush with top of bumper and straight back. | $3,178 |
| 8300-0144 | Chevron "A" style 6" 3M "Diamond Grade" striping full width on rear of body (does not include the B1 door). Includes rear facing extrusions panels and doors. Colors to be [#COL]. | $1,865 |
| 8300-0145 | Chevron "A" style 6" 3M "Diamond Grade" striping on front bumper. Colors to be [#COL]. | $892 |
| 8300-0146 | Chevron "A" style 6" 3M "Diamond Grade" striping full width on rear of body. Includes rear facing extrusions panels and doors. Colors to be [#COL]. | $2,460 |
| 8300-0147 | Sign Gold Stripe - 3/4" Wide - Black Gold Black. To be located above and below scotchlite stripe. | $1,998 |
| 8300-0148 | Sign gold scroll (4 ea side) for body with connecting .75" sign gold body stripe and white painted pin stripe. | $3,126 |
| 8300-0150 | Chevron "A" style 6" printed sheet Scotchlite striping on rear of body. Includes rear facing extrusions panels and doors inboard/outboard of the beavertails (if applicable). Colors to be [#COL]. | $1,271 |
| 8300-0152 | Chevron "A" style 6" 3M "Diamond Grade" Scotchlite striping full width on rear of body. Includes rear facing compartment face extrusions panels and doors. Does not include center lower pump panel. Colors to be [#COL]. | $2,460 |
| 8300-0153 | Chevron "A" style 6" 3M "Diamond Grade" Scotchlite striping on the upper center pump/storage access. Colors to be [#COL]. | $778 |
| 8300-0154 | Chevron "A" style 6" 3M "Diamond Grade" striping on rear of body. Includes rear facing extrusions panels and doors inboard of the beavertails(if applicable). Colors to be [#COL]. | $2,151 |
| 8300-0155 | NFPA Scotchlite Stripe - 4" wide with ribbon style "Z". Stripe straight on front sides and rear of cab and body. "Z" location to be specified by customer. Color: [#COL]. Location: [#LOC]. | $1,202 |

| Item No. | Description | |
|---|---|---|
| 8300-0159 | Red/Yellow scotchlite. Locate on front of roll-out tray(s) front lip of adjustable/fixed shelves and tool board(s) on outer vertical edge on both sides. | $438 |
| 8300-0160 | Chevron "A" style 6" printed sheet Scotchlite striping on front and rear faces of overhead ladder rack. Colors to be [#COL]. | $426 |
| 8300-0161 | NFPA Scotchlite stripe. Pasco County double half "S" stripe with 1" black 1/2" white 4" red 1/2" white. See photos on file with sales. | $2,199 |
| 8300-0162 | Scotchlite stripe 1" located 1" below existing stripe. Color: [#COL]. | $354 |
| 8300-0165 | Chevron "A" style 6" printed sheet Scotchlite striping on outer panel of beavertails. Colors to be [#COL]. | $452 |
| 8300-0167 | White Diamond Grade Scotchlite. Locate on front of roll-out tray(s) front lip of adjustable/fixed shelves and tool board(s) on outer vertical edge on both sides. | $438 |
| 8300-0169 | NFPA Scotchlite Stripe - 6" wide with "Z". Stripe straight on front sides and rear of cab and body. "Z" location to be specified by customer. Color: White on cab and body / Ruby Red on body doors. Location: bottom of stripe flush with top of bumper and straight back. | $1,202 |
| 8300-0179 | Chevron "A" style 6" printed sheet Scotchlite striping on rear of body. Includes rear facing extrusions panels inboard/outboard of the beavertails (if applicable). Does not include the rear door(s). Colors to be Yellow/Red. | $1,207 |
| 8300-0181 | Paint Break Sign Gold Chassis Stripe - 3/4" Wide - Black Gold Black. Sign Gold to be small turn style. To be located above existing paint break. | $527 |
| 8300-0183 | NFPA Scotchlite Stripe - 1"/1"/.25"/4"/.25"/1"/1" wide with "Z". Stripe straight on front sides and rear of cab and body. "Z" location to be specified by customer. Lower portion of stripes will continue rearward after "Z". There will be a 1/4" gap between stripes. Color: Blue/White/Blue/White/Blue/White/Blue. Location: bottom of stripe flush with top of bumper and straight back. | $3,404 |
| 8300-0186 | NFPA Scotchlite Stripe - 2" and 6" wide with "Z". Stripe straight on front sides and rear of cab and body. "Z" location to be specified by customer. 2" above 6" with 1" gap between stripes. 6" stripe to have a .25" outline above and below. Color: [#COL]. Location: [#LOC]. | $1,697 |
| 8300-0189 | Scotchlite striping on front bumper 6". Color to be [#COL]. | $753 |
| 8300-0190 | Chevron "A" style 6" 3M "Diamond Grade" striping on rear of body (does not include the B1 door). Includes rear facing extrusions panels and doors inboard/outboard of the beavertails(if applicable). Colors to be [#COL]. | $1,865 |
| 8300-0191 | Paint break Scotchlite chassis stripe - 1/4" Wide - [#COL]. To be located above existing paint break. | $489 |
| 8300-0192 | NFPA Scotchlite Stripe - 8" and 3" wide with "Z". Stripe straight on front sides and rear of cab and body. "Z" location to be specified by customer. 8" above 3" with 1.5" gap between stripes. Color: White. Location: Center of the 8" stripe centered with Quad bezel (in between upper and lower bezel) and straight back. | $2,230 |
| 8300-0193 | Chevron "A" style 3M "Diamond Grade" Dots in 6" striping pattern on rear of body (does not include the B1 door). Includes rear facing extrusions panels and doors inboard of the beavertails (if applicable). Colors to be [#COL]. | $2,779 |
| 8300-0194 | Install dealer supplied Scotchlite pinstripe above and below existing stripe. Color: Blue. | $549 |
| 8300-0195 | Sign gold .75" stripe and scroll package. Total of (5) scrolls for body (1) in each upper forward corner of L1R1L3 and upper rearward corner of L2R2 with connecting stripes side dump panels to have rearward vertical stripe the cab to have stripe contouring the wheel wells and around front of cab. All stripes to have red scotchlite pin stripe. | $3,667 |
| 8300-0197 | Scotchlite stripe 1" located 1" down from top of stripe and 1" up from bottom of stripe (1"stripes on existing stripe). Color: [#COL]. | $708 |
| 8300-0198 | NFPA Scotchlite Stripe - 8" wide with "Z". Stripe straight on front sides and rear of cab and body. "Z" location to be specified by customer. Color: [#COL]. Location: [#LOC]. | $2,230 |
| 8300-0199 | Sign Gold Body Stripe - 1" Wide - Black Gold Black located .5" above and below existing stripe. | $1,327 |
| 8300-0200 | Scotchlite stripe 2" located 2" below existing stripe. Color: [#COL]. | $837 |
| 8300-0201 | Chevron "A" style 6" 3M "Diamond Grade" striping on ladder rack lowering arms. The Chevron shall be applied to the rear and forward arm surfaces only. Colors to be [#COL]. | $350 |
| 8300-0202 | Sign Gold Stripe - 1" Wide - Black Gold Black. To be located above and below scotchlite stripe. | $1,872 |
| 8300-0205 | NFPA Scotchlite Stripe - 4" wide with double ribbon. Double ribbon locations to be specified by customer. Color: [#COL]. Location: [#LOC]. | $1,641 |
| 8300-0206 | Red rubrail scotchlite insert. | $218 |
| 8300-0209 | NFPA Scotchlite Stripe - 10" wide with pin striping above and below. Pin striping thickness and spacing shall be as specified in shop order and straight on front sides and rear of cab and body. Color: [#COL]. Location: [#LOC]. | $1,562 |
| 8300-0210 | Reflective tape. There will be reflective tape added to the front and both sides of all roll-out trays to aid in visibility. Tape will be [#COL] in color. | $1,117 |
| 8300-0214 | Chevron "A" style 6" printed sheet Scotchlite striping stitched to vinyl hosebed cover end flap. Colors to be [#COL]. | $452 |

| Item No. | Description | |
|---|---|---|
| 8300-0216 | Scotchlite 3" wide hockey stripe straight across front and may contour as it transitions from cab to body on each side. Color: [#COL]. Location: [#LOC]. | $903 |
| 8300-0217 | NFPA Scotchlite Stripe - 1" and 6" wide with "Z". Stripe straight on front sides and rear of cab and body. "Z" location to be specified by customer. 1" above 6" with 1" gap between stripes. 6" stripe to have a .25" outline above and below. Color: [#COL]. Location: [#LOC]. | $1,697 |
| 8300-0218 | Two-tone vinyl custom scroll (4 ea side) for body. See photos on file with sales. | $772 |
| 8300-0219 | Sign Gold Body Stripe - 3/4" Wide - Gold with single Black pin stripe. Located above and below existing stripe. Top to bottom black pin stripe sign gold existing stripe sign gold black pin stripe. | $1,183 |
| 8300-0220 | Paint Break Sign Gold Chassis Stripe - 1" Wide - Black pin stripe Sign Gold Black pin stripe. To be located above existing paint break if so equipped or at the same approximate position (when there is not a paint break). | $704 |
| 8300-0221 | Sign gold scroll (Ea). Scroll detail/definition shall be defined by sales administration and or shop order file. Location: [#LOC] | $60 |
| 8300-0222 | NFPA Scotchlite Stripe - 1" 4" and 1" wide with "Z". Stripe straight on front sides and rear of cab and body. "Z" location to be specified by customer. 1" above and below 4" with 1" gap between stripes. Color: [#COL]. Location: [#LOC]. | $1,697 |
| 8300-0223 | NFPA Scotchlite Stripe - 6" wide with double pin stripe top and bottom. "Z" Stripe straight on front sides and rear of cab and body. "Z" location to be specified by customer. Stripe shall be a printed sheet laid out from top to bottom as 1/4" pin stripe 1/8" gap (wide stripe color) 1/8" pin stripe 6" wide stripe 1/8" pin stripe 1/8" gap (wide stripe color) 1/4" pin stripe. Color: [#COL]. Location: [#LOC]. | $1,697 |
| 8300-0224 | Paint break Scotchlite chassis stripe - 1/2" Wide - [#COL]. To be located above existing paint break. | $560 |
| 8300-0225 | Paint break Scotchlite body stripe - 1/2" Wide - [#COL]. To be located above existing paint break. | $797 |
| 8300-0226 | Sign Gold Stripe - 3/4" Wide aerial sign plate - Gold with red pin stripe outline. The striping shall create a border around sign plate lettering. | $1,183 |
| 8300-0227 | Diamond Grade reflective tape on (2) outriggers. Striping to alternate in an "A" pattern when viewed from the front or rear of the truck. Colors to be: [#COL]. | $723 |
| 8300-0228 | Printed reflective striping on (2) outriggers. Striping to alternate in an "A" pattern when viewed from the front or rear of the truck. Colors to be: [#COL]. | $322 |
| 8300-0229 | Scotchlite stripe 3" located 2" below existing stripe. Color: [#COL]. | $884 |
| 8300-0230 | Paint break painted on chassis stripe - 1/8" Wide - [#COL].To be located above existing paint break if so equipped or at the same approximate position (when there is not a paint break). | $1,191 |
| 8300-0232 | NFPA Scotchlite Stripe - 2" and 4" wide with interlocking "Z". Stripe straight on front sides and rear of cab and body. "Z" location to be specified by customer. 2" above 4" with 1" gap between stripes. Color: [#COL]. Location: [#LOC]. | $1,697 |
| 8300-0233 | NFPA Scotchlite Stripe - 1" 4" and 1" wide with triple interlocking "Z". Stripe straight on front sides and rear of cab and body. "Z" location to be specified by customer. 1" above and below 4" with 1" gap between stripes. Color: [#COL]. Location: [#LOC]. | $2,483 |
| 8300-0234 | NFPA Scotchlite Stripe - 2" wide with "Heartbeat". Stripe straight on front sides and rear of cab and body. "heartbeat" location to be specified by customer. Color: [#COL]. Location: [#LOC]. | $1,192 |
| 8300-0239 | Individual reflective tape on (2) outriggers. Striping to alternate in an "A" pattern when viewed from the front or rear of the truck. Colors to be: [#COL]. | $621 |
| 8300-0240 | Installation of a customer supplied stripe 16" in width shall be installed. The 16" stripe material shall be supplied by the customer Spectra Red in color and shall be reviewed by the Graphics personnel prior to order entry. The stripe shall align on the cab face as specified by customer and go straight back. | $1,731 |
| 8300-0241 | Sign Gold stripe - 1/2" gold stripe with a 1/8" black outline on both sides - to be located above and below customer supplied stripe full length cab and body. | $1,499 |
| 8300-0245 | 5/16" Pin stripe above and below existing Scotchlite stripe. Color: [#COL]. | $897 |
| 8300-0246 | Yellow M 983-71 rubrail scotchlite insert. | $486 |
| 8300-0247 | NFPA Scotchlite Stripe - 8" wide with overlaid striping. Overlaid striping width and spacing shall be as specified in shop order and straight on front sides and rear of cab and body. Color: [#COL]. Location: [#LOC]. | $1,562 |
| 8300-0248 | Chevron "A" style 6" printed sheet Scotchlite striping on entire rear of body. Includes rear facing extrusions panels doors and rear driver and officer compartment face. Colors to be [#COL]. | $1,899 |
| 8300-0251 | Scotchlite stripe 3" located 1" below existing stripe. Color: [#COL]. | $884 |
| 8300-0252 | NFPA Scotchlite hockey stripe. The stripe shall be 4"wide with a 3/4" gap above with a 2" wide stripe. The hockey stripe shall go straight across front and may contour as it transitions from cab to body on each side. Color: [#COL]. Location: [#LOC]. | $999 |
| 8300-0254 | Sign gold scroll (2) at front cab corners below windshield with connecting .75" sign gold chassis stripe between scrolls and down to trim. | $357 |
| 8300-0255 | Chevron "A" style 6" 3M "Diamond Grade" Scotchlite striping on the rear side of the pull out tool board in L3. Colors to be Red/Fluorescent Yellow Green. | $354 |

| Item No. | Description | |
|---|---|---|
| 8300-0257 | Scotchlite Stripe - approximately 6" wide straight on front of cab below windshield end at radius corners. Stripe to be in line (match) the top of the side stripes and trimmed as required at the front cab horizontal radius just above the bumper. Color: [#COL]. | $208 |
| 8300-0258 | Chevron "A" style 6" Blue 3M Scotchlite and 983-71 Yellow 3M "Diamond Grade" striping on rear of body. Includes rear facing extrusions panels and doors inboard/outboard of the beavertails (if applicable). | $2,460 |
| 8300-0259 | Chevron "A" style 3M Diamond Grade striping in rubrail. Colors to be: [#COL] | $689 |
| 8300-0262 | NFPA Scotchlite Stripe - Triple: 2" wide yellow 1" wide white 2" wide yellow with 1" space between each stripe. Straight on front and sides of cab and body. Location: Top of stripe even with top of quad bezel. | $1,203 |
| 8300-0264 | Paint break Scotchlite chassis stripe - 1" Wide - Red [#COL] Black. To be located above existing paint break. | $200 |
| 8300-0265 | NFPA Scotchlite Stripe - 6" wide with "Z". Stripe straight on front sides and rear of cab and body. "Z" location to be specified by customer. Color: White on cab and body / Ruby Red on body doors. Location: bottom of stripe flush with bottom of cab and straight back. | $1,202 |
| 8300-0266 | Sign Gold Stripe - 1/2" Wide. To be located above and below scotchlite stripe. | $1,407 |
| 8300-0267 | NFPA Scotchlite Stripe - 9.5" wide and straight on front sides and rear of cab and body. Color: [#COL]. Location: [#LOC]. | $1,237 |
| 8300-0269 | NFPA Scotchlite stripe. Hillsborough County hockey stripe with 1" red 1/4" white and 6" black with (2) 1" lemon yellow stripes centered on top of black stripe with 1/4" gap. See photos on file with sales. | $3,761 |
| 8300-0270 | Sign Gold Stripe - 1" Wide - Black Gold Black. To be located 1" above and below scotchlite stripe. | $1,551 |
| 8300-0271 | Chevron "A" style 6" 3M "Diamond Grade" striping on interior of front bumper lid. Colors to be [#COL]. | $892 |
| 8300-0272 | NFPA Scotchlite Stripe - 2" and 4" wide with interlocking hockey. Stripe straight on front sides and rear of cab and body. Hockey location to be specified by customer. 2" above 4" with 1" gap between stripes. Color: [#COL]. Location: [#LOC]. | $1,697 |
| 8300-0273 | Chevron "A" style 6" Reflexite V98 striping on front bumper. Colors to be [#COL]. | $788 |
| 8300-0274 | Chevron "A" style 6" Reflexite V98 striping full width on rear of body. Includes rear facing extrusions panels and doors. Colors to be [#COL]. | $2,091 |
| 8300-0275 | Chevron "A" style 6" Reflexite V98 striping full width on rear of body. Includes rear facing compartment face extrusions panels and doors. Does not include center lower pump panel. Colors to be [#COL]. | $2,091 |
| 8300-0279 | Stripe cab lock bar. Color: White. | $78 |
| 8300-0280 | Chevron "A" style 6" Reflexite V98 striping on (2) outriggers. Striping to alternate in an "A" pattern when viewed from the front or rear of the truck. Colors to be: [#COL]. | $680 |
| 8300-0283 | NFPA Scotchlite hockey stripe special; includes 7/8" black 2-7/8" gold and 5-7/8" gold stripes. To be straight across front and may contour as it transitions from Cab to Body on each side. Color: black/gold. Location: center of stripe centered with headlight bezel and straight back. See photo on file with sales. | $1,759 |
| 8300-0284 | NFPA Scotchlite Stripe - 6" wide with "triple hockey stripe". Stripe straight on front sides and rear of cab and body. "Hockey Stripe" location to be on compartment L1/R1. Color: White. Location: bottom of stripe flush with top of bumper and straight back. | $1,202 |
| 8300-0286 | Chevron "A" style 6" Reflexite V98 striping full width on rear of body (does not include the B1 door and/or center aerial ladder tunnel door). Includes rear facing extrusions panels and doors. Colors to be [#COL]. | $1,891 |
| 8300-0287 | Sign Gold Stripe - 3/4" Wide aerial sign plate - Black Gold Black. The striping shall create a border around sign plate lettering. | $1,183 |
| 8300-0288 | Sign Gold Body Stripe - 3/4" Wide - Black Gold Black. To be located on upper body sides terminating with an arrow at each end. | $685 |
| 8300-0289 | Paint Break Sign Gold Chassis Stripe - 3/4" Wide - Black Gold Black. To be located at the same approximate position as a paint break with dip to grille. | $263 |
| 8300-0291 | Scotchlite stripe 1" located 2" above and below existing stripe. Color: [#COL]. | $671 |
| 8300-0292 | Chevron "A" style 6" Reflexite V98 striping on rear of body. Includes rear facing extrusions panels and doors inboard of beavertails (if equipped). Does not include rear facing outboard compartment faces. Colors to be [#COL]. | $1,885 |
| 8300-0293 | Stripe cab lock bar. Color: Chevron red/yellow. | $78 |
| 8300-0294 | Florescent Yellow Green/Red Diamond Grade scotchlite. Locate on front of roll-out tray(s) front lip of adjustable/fixed shelves and tool board(s) on outer vertical edge on both sides (if applicable). | $438 |
| 8300-0296 | Scotchlite stripe 2" located flush directly above and below existing stripe. Color: [#COL]. | $849 |
| 8300-0297 | NFPA Scotchlite Stripe - 3" and 6" wide with interlocking "Z". Stripe straight on front sides and rear of cab and body. "Z" location to be specified by customer. 3" above 6" with 1" gap between stripes. Color: [#COL]. Location: [#LOC]. | $2,105 |
| 8300-0298 | Scotchlite stripe 1" located below existing stripe. Color: (1) white (1) gold. | $354 |

| Item No. | Description | |
|---|---|---|
| 8300-0300 | Reflective [#COL] 3M Diamond Grade striping positioned in the "A" formation located in the lower L5/R5 body door panels extending approximately 12" from the door's bottom. | $312 |
| 8300-0301 | NFPA Scotchlite Stripe - 6" wide with "S". Stripe straight on front sides and rear of cab and body. "S" location to be specified by customer. Color: [#COL]. Location: [#LOC]. | $1,425 |
| 8300-0303 | Scotchlite Stripe - 10" wide reflective stripe on heavy duty front bumper. Color: [#COL]. | $603 |
| 8300-0304 | NFPA Scotchlite Stripe - 1"-6"-1" wide with interlocking hockey. Stripe straight on front sides and rear of cab and body. Hockey location to be specified by customer. 1" above and below 4" with 1" gap between stripes. Color: [#COL]. Location: [#LOC]. | $1,895 |
| 8300-0305 | Scotchlite Stripe - 2" wide and straight on front/sides of cab and sides/rear of body. Color: [#COL]. Location: [#LOC]. | $425 |
| 8300-0306 | Chevron "A" style 6" Reflexite V98 striping on ladder rack lowering arms. The Chevron shall be applied to the rear and forward arm surfaces only. Colors to be [#COL]. | $296 |
| 8300-0307 | Reflective [#COL] Reflexite V98 striping positioned in the "A" formation located on all vertically hinged body door panels (forward door only on double doors) extending approximately 12" from the door's bottom. | $1,558 |
| 8300-0310 | Blue rubrail scotchlite insert. | $218 |
| 8300-0311 | Scotchlite stripe 2" located 2" above existing stripe. Color: [#COL]. | $425 |
| 8300-0312 | Scotchlite Stripe - 4" wide with graphic white "S"; See photos on file with sales. Stripe straight on front sides and rear of cab and body. "S" location to be specified by customer. Color: Orange. Location: bottom of stripe flush with top of bumper and straight back. | $1,638 |
| 8300-0314 | Signgold aerial sign plate scroll package. (1) each corner of the aerial sign plates with connecting connecting 3/4" signgold stripe. | $1,248 |
| 8300-0316 | Chevron "A" style 6" individual Scotchlite striping full width on rear of body. Includes driver and officer rear compartment face smooth plate panels and/or doors outboard and above the center rear compartment opening. Does not include rear compartment door. Colors to be [#COL]. | $1,347 |
| 8300-0318 | NFPA Scotchlite Stripe - 6" wide and straight on body only. Color: [#COL]. Location: [#LOC]. | $760 |
| 8300-0321 | Chevron "A" style 6" printed sheet Scotchlite striping on rear of body between beavertails below full width intermediate step. Colors to be [#COL]. | $1,149 |
| 8300-0322 | Florentine Gold Stripe - 1" Wide. To be located 1" above and below scotchlite stripe. | $1,551 |
| 8300-0325 | Paint Break Sign Silver Chassis Stripe - 3/4" Wide - Black Silver Black. To be located above existing paint break. | $263 |
| 8300-0327 | Scotchlite stripe (PR) 1/4in. located directly above and below existing stripe. Color: [#COL]. | $704 |
| 8300-0328 | NFPA Scotchlite stripe. Temple Texas double "S" triple stripe with 1.5" black 2.5" gold and 3.5" black. See photos on file with sales. | $2,679 |
| 8300-0329 | Chevron "A" style 6" 3M "Diamond Grade" striping full width on rear of body; half height from bottom per NFPA/ULC requirements. Includes rear facing extrusions panels and doors. Colors to be [#COL]. | $1,422 |
| 8300-0336 | Reflective [#COL] printed Scotchlite striping positioned in the "A" formation located on all vertically hinged body door panels (forward door only on double doors) extending approximately 12" from the door's bottom. | $928 |
| 8400-0000 | Vision flags on canopy windows (PR). | $565 |
| 8400-0004 | Install customer supplied logos on front cab doors. | $205 |
| 8400-0005 | A pair of customer logos for cab supplied to E-One in a digital format. | $885 |
| 8400-0006 | A pair of customer logos for body supplied to E-ONE in a digital format. | $1,766 |
| 8400-0008 | Star of life logo 12". Location: [#LOC]. | $104 |
| 8400-0009 | American Flag (EA). Approx size: 7"H x 14"W. Location: [#LOC] | $118 |
| 8400-0010 | Install customer logo from an existing E-ONE design (EA). Location: [#LOC] | $127 |
| 8400-0011 | Vision flag on officer canopy window. | $285 |
| 8400-0012 | Star of life logo 22.5". Location: [#LOC] | $204 |
| 8400-0015 | Install customer supplied logos on rear cab doors. | $205 |
| 8400-0016 | A pair of Customer Logos supplied to E-One in a digital format. Location: [#LOC]. | $921 |
| 8400-0017 | A customer logo supplied to E-ONE in a digital format. Location: [#LOC]. | $313 |
| 8400-0018 | Star of life logo 20". Location: (1) each side centered on canopy window. | $344 |
| 8400-0023 | Install customer supplied logo. Location: [#LOC]. | $72 |
| 8400-0024 | Install up to 12" SignGold customer logo from an existing E-ONE design (EA). Location: [#LOC]. | $189 |
| 8400-0025 | A customer SignGold logo (up to 12") supplied to E-ONE in a digital format. Location: [#LOC]. | $398 |
| 8400-0029 | Reflective American Flag (PR) - wavy. Approx size: 12"H x 18"W. Location: [#LOC]. | $235 |
| 8400-0036 | Star of life logo 20" (PR). Location: (1) each side centered between cab doors. | $344 |
| 8400-0039 | Star of life logo 12" with black outline. Location: [#LOC]. | $104 |
| 8400-0042 | Vision 9/11 flag raising on canopy windows (PR). | $565 |
| 8400-0045 | Yellow label with black lettering to read "Clear front bumper prior to tilting cab". Locate above cab tilt door. | $55 |
| 8400-0049 | American Flag (EA). Approx size: 16"H x 27"W. Location: Portable tank at rear and driver side of body. | $350 |
| 8400-0050 | Vision 9/11 twin tower tribute on canopy windows (PR). | $565 |

| Item No. | Description | |
|---|---|---|
| 8400-0052 | Vision graphic on canopy windows (PR). Customer supplied to E-ONE in a digital format. | $781 |
| 8400-0053 | Waving American Flag (EA). Approx size: 7"H x 14"W. Location: [#LOC]. | $118 |
| 8400-0059 | Vision 9/11 twin tower tribute on rear cab non-vista door windows (PR). | $565 |
| **DOCUMENTATION & MISCELLANEOUS** | | |
| 9300-0003 | Waterous Compressed Air Foam System training. | $4,134 |
| 9300-0007 | Vehicle Familiar - Domestic. | $5,611 |
| 9300-0009 | Manuals Operator and Service CD-ROM. | $350 |
| 9300-0010 | Approval Drawings | $1,009 |
| 9300-0012 | Pump panel approval drawings. | $406 |
| 9300-0013 | Approval Drawings Revised | $203 |
| 9300-0017 | Manuals Printed (Set). | $914 |
| 9300-0018 | Manuals Operator and Service CD-ROM (additional set). | $52 |
| 9300-0031 | Dash panel layout approval drawings | $527 |
| 9300-0035 | Customer late change order. | $379 |
| 9300-0040 | As built electrical drawings. | $2,451 |
| 9300-0041 | As built plumbing drawings. | $3,061 |
| 9300-0044 | Transmission programming print-out - provided at delivery. | $119 |
| 9300-0303 | Approval Drawings - Top View of body and pump module section of the vehicle. | $277 |
| 9300-0304 | Manuals printed (1). | $860 |
| 9300-0305 | Advent/Hot Shot Foam System Training. | $5,273 |
| 9300-0306 | Approval Drawings-Additional views. Top view of body and pump module areas. Detailed top view of the interior cab view layout. | $554 |

**Notes:**

**1) Availability of options are limited by other options selected, and not all options are available in every chassis/apparatus configuration. Selection of an option may require several of the above parts/items to complete the option package.**

**2) Certain options, alone or in combination with other options, may require heavier axle/suspension packages, longer frames, or reinforced frames at additional cost per the above price list.**

**3) To configure options, the E-One State Term Schedule authorized dealer will use quote configuration software to select the components necessary to effect the option, feature, or configuration requested and quote the total option price.**

Fire Apparatus Quotation for:
STATE OF OHIO TERM SCHEDULE

Quotation Number: 57490 Rev: 34

Unit Description: AERM-TYPH-075L
Quote Description: Aerial Rear Mount, Typhoon, HP75 Ladder

| Salescode | Extended Description | Qty |
|---|---|---|
| **TESTING COMPLIANCE STANDARD** | | |
| 1001-0065 | The E-ONE supplied components of the vehicle shall meet the requirements of NFPA 1901, 2016 edition. | 1 |
| 3090-0001 | Hosebed hoseload allowance on the apparatus shall be 1000 lbs. | 1 |
| 3090-0002 | OAH. Unit has no overall height restrictions. | 1 |
| 3090-0004 | OAL. Unit has no overall length restrictions. | 1 |
| 3340-1137-12C | Equipment allowance on the apparatus shall be 2500 lbs. This allowance is in addition to the weight of the hoses and ground ladders listed in the shop order as applicable. | 1 |
| **BUMPERS** | | |
| 1160-0000 | Bumper 10" stainless steel. | 1 |
| 1160-0011 | 4" Front Bumper Extension. | 1 |
| **FRAME ASSEMBLY** | | |
| 1250-0080 | Frame assembly with 10.25 x 3.5 x .375 powder coated galvanized rails. | 1 |
| 1250-0083 | Frame liner 9.375 x 3.125 x .375, galvanized and powder coated. | 1 |
| **AXLE OPTIONS** | | |
| 1025-0005 | Meritor FL-941 front axle 18,700 lb. | 1 |
| 1025-0018 | Meritor RS-30-185 single rear axle 31,000 lb. capacity. | 1 |
| 1025-0028 | Koni shock absorbers for front axle - adjustable. | 1 |
| **SUSPENSIONS** | | |
| 1070-0012 | Reyco rear suspension springs rated equal to the capacity of the axle. | 1 |
| **WHEEL OPTIONS** | | |
| 1050-0000 | Steel wheels for front axle (2). | 1 |
| 1050-0002 | Steel wheels for rear axle (4). | 1 |
| 1050-0007 | Front axle wheel trim kit. Includes stainless steel lug nut covers (chrome plated plastic if applicable) and center cap with E-ONE logo. Note: Center cap will have an inspection port IPO a logo if equipped with Stemco oil seals. | 1 |
| 1050-0008 | Rear axle (single) wheel trim kit. Includes stainless steel lug nut covers (chrome plated plastic if applicable) and center cap with E-ONE logo. E-ONE custom chassis w/steel wheels will have chrome plated plastic lug covers. | 1 |
| **TIRE OPTIONS** | | |
| 1060-0017 | Four Michelin 315 rear tires with XDN2 mud and snow tread. | 1 |
| 1060-0047 | Two Michelin 385 tires model XFE for front axle. | 1 |
| 1060-0117 | RWC AirGuard LED tire pressure monitoring valve stem caps (6) for single rear axle applications. | 1 |
| **BRAKE SYSTEMS** | | |
| 1100-0000 | 16-1/2" x 6" S-cam brakes with ArvinMeritor automatic slack adjusters for front axle. | 1 |
| 1100-0002 | ArvinMeritor 16-1/2" x 7" S-cam brakes with cast brake drums for a single rear axle. | 1 |
| 1100-0005 | Brake system air 4X2/4X4. | 1 |
| 1100-0006 | Parking brake release mounted on the driver's side lower dash. | 1 |
| **AIR SYSTEM OPTIONS** | | |

| | | |
|---|---|---|
| 1110-0000-001 | Inlet for air system. Location: driver door jamb. | 1 |
| 1110-0002 | Air dryer Bendix AD-9. | 1 |
| 1110-0006 | Air lines nylon. | 1 |
| 1110-0041 | Air horns Grover recessed in bumper (PR). | 1 |
| **ENGINES & TRANSMISSIONS** | | |
| 1200-0017 | Push-button transmission shift selector. | 1 |
| 1200-0020 | TransSynd synthetic transmission fluid for EVS3000. | 1 |
| 1200-0097 | Electronic limiting of speed to 68 MPH maximum. Note: Max speed may be set at 65 MPH due to tire rating. | 1 |
| 1200-0312 | Eng/Trans Cummins ISL 400HP/EVS3000 2016 EPA compliant engine. | 1 |
| **SECONDARY BRAKING** | | |
| 1125-0002 | Jacobs engine compression brake. | 1 |
| 1125-0023 | Transmission to seek second gear when Jacobs engine brake or Telma retarder is engaged. N/A with Trans retarder. | 1 |
| **COOLING PACKAGE** | | |
| 1800-0013 | Cooling system for use with Cyclone II X, Typhoon X, and Quest chassis. For use with 2010 / 2013 / 2016 EPA engines. Includes coolant recovery system. | 1 |
| **FUEL SYSTEMS** | | |
| 1350-0003 | Fuel system 50 gallon. | 1 |
| 1350-0011 | Fuel pump electric w/re-prime. | 1 |
| 1350-0012-670 | Fuel shut-off valve. Location: one (1) inlet side of OEM fuel filter. | 1 |
| 1350-0022 | Fuel line hose rubber. | 1 |
| **ALTERNATOR** | | |
| 1700-0005 | Alternator Leece Neville 320 amp. 320 amp SAE/275 amp NFPA. | 1 |
| **BATTERIES** | | |
| 1400-0002 | Battery four group 31 1000 CCA. | 1 |
| **CHASSIS OPTIONS** | | |
| 1680-0005 | Thermatic fan clutch. | 1 |
| 1680-0006 | Drivelines 1710. | 1 |
| 1680-0012 | Tow eyes rear frame painted. | 1 |
| 1680-0042 | Tow hooks front painted in the down position. | 1 |
| 1680-0051 | Aerial hydraulic activation system. | 1 |
| 1680-0250-M58 | Diesel Exhaust Fluid (DEF) 5 gallon tank for 2013 / 2016 EPA engines. Location: left side below rear of cab. | 1 |
| **CAB MODEL** | | |
| 1520-0013 | Typhoon X medium cab with 58" CA | 1 |
| **CAB ROOF TYPE** | | |
| 1615-0010 | Cab roof to be "flat" (non-vista). | 1 |
| **CAB BADGE PACKAGE** | | |
| 1610-0000 | Cab and body to have applicable E-ONE logos. | 1 |
| **GRILLE** | | |
| 1620-0004 | ABS chrome plated grille. | 1 |
| **CAB DOOR OPTIONS** | | |
| 1550-0003 | Rear crew cab doors in the medium position. | 1 |
| 1550-0005 | Driver and officer cab door windows. Include forward vent windows. | 1 |
| 1550-0011 | Rear crew cab door windows. Includes manual roll-down actuation. Not available on Typhoon or CII with paddle style door latching. | 1 |
| 1550-0016 | Cab door panels ABS. | 1 |
| 1550-0025 | All cab doors shall have "L" style exterior latches. | 1 |
| 1550-0027 | Front cab door windows to have manual actuation. | 1 |
| 1550-0038-659 | (4) LED cab step area lighting. Locate each light on each cab door in the inboard position. Lights to be | 1 |

| | | |
|---|---|---|
| | switched with door ajar. | |
| 1550-0044 | All cab door kick plates to be made from diamond plate aluminum. | 1 |
| 1550-0059-000-G6 | Reflective Red/Lemon Yellow printed striping positioned in the "A" formation located on the cab door panels. | 1 |
| 1550-0077 | Interior cab door locks - manual. Will have manual actuation from each respective door. Includes barrel style key lock on each exterior cab door. | 1 |
| 1550-0084 | All cab exterior access doors to have 1250 keyed locks. | 1 |

| MIRRORS | | |
|---|---|---|
| 1670-0003 | Velvac 2010 mirrors. Door mounted west coast style with remote control and heat. | 1 |

| MISC EXTERIOR CAB OPTIONS | | |
|---|---|---|
| 1550-0020 | Windows cab side fixed driver's side. | 1 |
| 1550-0033 | Windows cab side fixed officer's side. | 1 |
| 1675-0022 | Pair of 18" handrails located just behind driver and officer front door one each side. | 1 |
| 1675-0023 | Pair of 18" handrails located just behind driver and officer rear door (ALS doors if equipped) one each side. | 1 |
| 1675-0030 | Mud flaps, front, black with E-ONE logo. | 1 |
| 1675-0047 | Rear cab wall to be 3/16" aluminum diamond plate. | 1 |
| 1675-0202 | Mounting plate for battery charger receptacle, indicator and air inlet (if applicable). Plate to be removable brushed stainless steel. | 1 |

| HVAC | | |
|---|---|---|
| 1515-0017 | Air conditioning for the Typhoon X, CII X and Quest with Cummins ISC/ISL engine and radiator mounted condenser. | 1 |
| 1515-0053 | Controls for heating and air conditioning shall be located in the center dash area. (Lower area on Typhoon and CII with severe duty dash) | 1 |

| SEATS | | |
|---|---|---|
| 1510-0003 | Seats, Inc. brand 911 cab seats. | 1 |
| 1510-0008 | Seat color gray. | 1 |
| 1510-0035-147 | Universal air pack bottle bracket (EA). Location: officer's seat. | 1 |
| 1510-0035-148 | Universal air pack bottle bracket (EA). Location: rear facing driver's side. | 1 |
| 1510-0035-215 | Universal air pack bottle bracket (EA). Location: rear facing officer's side. | 1 |
| 1510-0038 | Driver seat 911 air ride. | 1 |
| 1510-0042 | Officer seat to be 911 fixed SCBA. | 1 |
| 1510-0050 | Rear facing 911 seat with SCBA driver's side. | 1 |
| 1510-0053 | Rear facing 911 seat with SCBA officer's side. | 1 |
| 1510-0234 | Seat cover material Turnout Tuff. | 1 |
| 1685-0031 | Seating capacity tag of four occupants. | 1 |

| MISC INTERIOR CAB OPTIONS | | |
|---|---|---|
| 1685-0000 | Cab interior gray. Does not include engine cover or seat color. | 1 |
| 1685-0005 | Lexan sun visors, driver and officer's side overhead. | 1 |
| 1685-0168 | ABS Dash package. Includes center and officer side dash, lower kick panels and "A" post covers. | 1 |
| 1685-0187 | Severe duty engine cover, molded polyurethane. | 1 |

| CAB ELECTRICAL OPTIONS | | |
|---|---|---|
| 1750-0013-172 | Turn signal Whelen 600 LED amber arrow pair located upper headlight bezel. | 1 |
| 1750-0024-179-04 | Auto-Eject receptacle inlet 20 amp located outside driver's door next to handrail with a Yellow cover. | 1 |
| 1750-0029 | Switch horn button two position DOT/air horn. | 1 |
| 1750-0046-195 | Cab Headlights. Position: lower. | 1 |
| 1750-0072-593 | 12 VDC (or 24VDC) electrical outlet in the cab wired battery hot. Location: officer side dash. | 2 |
| 1750-0075 | English dominant main cab gauge cluster. | 1 |
| 1750-0158 | Dome Lts Red/White LED. Package includes two lights mounted in the front and two mounted in the rear of the cab. White light wired through door and light assembly switch. Red light through light assembly switch. | 1 |
| 1750-0198-A31 | Battery charger to be located behind driver's seat. | 1 |

| | | |
|---|---|---|
| 1750-0343 | Battery charger E-ONE LPC 20. 120 volt inlet, 20 amp output. | 1 |
| 1750-0435 | Halogen cab headlights. TyphoonX, CIIX and QST2 only. | 1 |
| 1750-0449 | Momentary DPF regeneration override switch. | 1 |

| BODY MODEL | | |
|---|---|---|
| 3080-0064 | Body aerial HP75 / HP78 SideStacker Quest / CII / Typhoon with pump. Single axle. Includes extended R1 compt and pocket style drop down step at left rear staircase. The rear access doors to match the rear body finish. | 1 |

| BODY COMPT REAR | | |
|---|---|---|
| 3110-0360 | Rear of body to have un-painted smooth plate overlay style body panels to facilitate rear body striping. | 1 |

| AERIAL BODY OPTIONS | | |
|---|---|---|
| 3310-0050 | Crosslay triple 5.5" wide single stack to hold up to 200' of 2.0" DJ (each) or 150'-200' 2.5" DJ (each). Includes storage pan to rear of crosslays | 1 |
| 3310-0097 | Hose bed depth 26" HP75 / HP78 SideStacker with tall R1. Will hold up to 800' of 5" LDH and up to 300-400' of 2.5 or 3" DJ. Capacity will be reduced with optional diamond plate covers. | 1 |
| 3310-0128 | Pike pole/Ladder storage. Available on HP75/78 SideStacker with tall R1 & HM100/110 SideStacker only. The access door to match the rear body finish. | 1 |
| 3310-0161 | Jack leg opening covers diamond plate (2) sets. Includes diamond plate outrigger covers and fixed diamond plate filler panels. | 1 |
| 3310-0314 | Auxiliary jack pad 24X24 (2) with 20 degree formed handle. Includes mounting brackets. | 1 |

| DOORS | | |
|---|---|---|
| 3300-0017-004 | Door roll up short (up to 45") with satin finish ROM. Location(s): L2. | 1 |
| 3300-0017-005 | Door roll up short (up to 45") with satin finish ROM. Location(s): L3. | 1 |
| 3300-0019-003 | Door roll up tall (greater than 45") with satin finish ROM. Location(s): L1. | 1 |
| 3300-0019-006 | Door roll up tall (greater than 45") with satin finish ROM. Location(s): L4. | 1 |
| 3300-0019-015 | Door roll up tall (greater than 45") with satin finish ROM. Location(s): R1. | 1 |
| 3300-0164-016 | Door double vertical hinged w/rotary latches - painted . Location(s): R2 | 1 |

| SHELVES | | |
|---|---|---|
| 3370-0052-004 | Adjustable shelf (J-Style) for non-transverse compartments 16" or greater in depth. Location: L2. | 1 |
| 3370-0052-070 | Adjustable shelf (J-Style) for non-transverse compartments 16" or greater in depth. Location: L1 upper. | 1 |
| 3370-0052-073 | Adjustable shelf (J-Style) for non-transverse compartments 16" or greater in depth. Location: R1 lower. | 1 |
| 3370-0052-079 | Adjustable shelf (J-Style) for non-transverse compartments 16" or greater in depth. Location: L4 lower. | 1 |
| 3370-0054-004 | Tracks for adjustable shelf and/or adjustable tray in compartments 16" or greater in depth. Location: L2. | 1 |
| 3370-0054-070 | Tracks for adjustable shelf and/or adjustable tray in compartments 16" or greater in depth. Location: L1 upper. | 1 |
| 3370-0054-073 | Tracks for adjustable shelf and/or adjustable tray in compartments 16" or greater in depth. Location: R1 lower. | 1 |
| 3370-0054-079 | Tracks for adjustable shelf and/or adjustable tray in compartments 16" or greater in depth. Location: L4 lower. | 1 |

| COVERS | | |
|---|---|---|
| 3305-0007-000-02 | Vinyl Red hose bed cover with attached rear flap(s). | 1 |
| 3305-0008-000-02 | Vinyl Red crosslay cover with attached side flaps. | 1 |

| PUMP MODULE | | |
|---|---|---|
| 3130-0076 | Pump panel opening is 47" wide. | 1 |

| PUMP PANELS | | |
|---|---|---|
| 3134-0016 | Stainless steel driver and officer side pump panels. | 1 |
| 3134-0055 | Officer side upper pump access panel to be horizontal hinged with stainless steel door. Includes (2) push button latches and (2) hold open devices. | 1 |

| | | |
|---|---|---|
| 3134-0064 | The gauge panel(s) on the driver side of the Side Mount module to be hinged upward. Panel(s) to include (2) mechanical/pneumatic (as applicable to panel size) hold opens and latches. | 1 |

| MISC PUMP PANEL OPTIONS | | |
|---|---|---|
| 4460-0003 | Pump panel tags color coded per NFPA compliance. | 1 |

| WATER TANK | | |
|---|---|---|
| 4010-0198 | 500 gallon "T" water tank. UPF Poly III blue fill tower. | 1 |

| TANK PLUMBING | | |
|---|---|---|
| 4450-0010 | 2" tank fill Akron manual valve. | 1 |
| 4450-0022 | 3" tank to pump Akron manual valve. | 1 |

| LADDER STORAGE / RACKS | | |
|---|---|---|
| 3365-0167-C85 | Dual ladder tunnel for HP75 / HP78 SideStacker with tall R1 compartment. Ladder rack to hold: PEL3-35, PEL-28 and PRL-16. | 1 |

| HANDRAILS / STEPS | | |
|---|---|---|
| 3330-0001 | Slide-out platform, integral driver side running board (includes hand rail as applicable). | 1 |
| 3330-0279-060 | Innovative Controls dual lighted LED folding step. Location: officer side front compartment face. Each location requires a minimum of (1) handrail per NFPA. | 3 |
| 3330-0279-062 | Innovative Controls dual lighted LED folding step. Location: driver side front compartment face. Each location requires a minimum of (1) handrail per NFPA. | 3 |

| MISC BODY OPTIONS | | |
|---|---|---|
| 3340-0015 | Diamond plate single axle wheel well. Includes bolt-on composite wheel well liners and aluminum trim fenderettes. | 1 |
| 3340-0093 | Mud flaps, rear, black with E-ONE logo. | 1 |
| 3340-0270 | The painted aerial body side panels shall be smooth / flush. Applies to SideStacker HB side, panels next to water tank on MM, and upper body sides on RLP. | 1 |

| SCBA BOTTLE STORAGE | | |
|---|---|---|
| 3320-0061 | SCBA Bottle Storage. (4) Cast Product SCBA bottle storage doors. (2) each side in rear wheel well area. | 1 |
| 3320-0100 | Strap(s), loop style to retain SCBA bottle(s). Locate one per bottle in each exterior storage compartment. | 4 |

| PUMPS | | |
|---|---|---|
| 4005-0030 | Rating 1250 GPM | 1 |
| 4005-0195 | Hale QFLO 750-1250 GPM pump, single stage. Requires primer option. | 1 |

| PUMP CERTIFICATION | | |
|---|---|---|
| 4475-0000 | Pump certification 750-2250 GPM | 1 |

| PUMP OPTIONS | | |
|---|---|---|
| 4015-0008 | Zinc anodes for Hale pump (PR), (1) discharge side and (1) intake side. | 1 |
| 4015-0053-198 | Steamers to be Flush + 1". Location: driver's side. | 1 |
| 4015-0053-199 | Steamers to be Flush + 1". Location: officer's side. | 1 |
| 4015-0073 | Manual operated master pump drain. The master drain shall be clearly marked and placed in accessible location below running board on driver side or L1 compartment. | 1 |
| 4015-0210 | Pump cooler with Innovative Control 1/4 turn valve with "T" handle and label. | 1 |
| 4015-0238 | Hale electric primer (oil-less). | 1 |

| INTAKES | | |
|---|---|---|
| 4440-0005 | 2.5" Left Intake Akron Manual Valve. | 1 |

| INTAKE OPTIONS | | |
|---|---|---|
| 4445-0009 | Intake relief valve, Akron. | 1 |

| | | |
|---|---|---|
| **DISCHARGES AND PRECONNECTS** | | |
| 4415-0012-654 | 1.5" Crosslay with Akron manual valve. Location: crosslay 1 & 2. | 2 |
| 4415-0014-581 | 2.5" Left Pump Panel Discharge Akron Manual Valve. Location: left side discharge 1. | 1 |
| 4415-0014-582 | 2.5" Left Pump Panel Discharge Akron Manual Valve. Location: left side discharge 2. | 1 |
| 4415-0051 | 4" Waterway Discharge with 3" Akron Manual Valve. | 1 |
| 4415-0054-583 | 4" Right Pump Panel Discharge with 3" Akron Manual Valve (Waterous pumps noted location to be forward lower port). Location: right side discharge 1. | 1 |
| 4415-0058-655 | 2.5" Crosslay Akron Manual Valve. Location: crosslay 3. | 1 |
| **DISCHARGE OPTIONS** | | |
| 4417-0175 | Innovative Controls push/pull valve controls with locking T handles. | 1 |
| 4417-0176 | Innovative Controls 3/4" bleeder/drain valve include lift lever with ergonomic grip. | 7 |
| 4417-0185 | Innovative Controls discharge and intake bezels with integral color code and verbiage for side mount pump panel. | 1 |
| **PRESSURE GOVERNORS** | | |
| 4465-0011 | Class 1 TPG pressure governor. Includes, water, oil, volt and tachometer. | 1 |
| **GAUGES** | | |
| 4435-0083 | Innovative Controls 10 LED SL series water tank level gauge. On pump panel. | 1 |
| 4435-0246 | 2.5" Innovative Controls stainless steel case pressure gauge (0-400) with color code bezel. | 7 |
| 4435-0247 | 4" Innovative Controls stainless steel case master pressure gauges with bezel. Intake 30-0-400, and discharge 0-400. | 1 |
| **ELECTRICAL SYSTEMS** | | |
| 5010-0013-Y83 | Vehicle data recorder - 2009 / 2016 NFPA compliant. Includes occupant detection with display. Display location: inboard on driver's side overhead console. | 1 |
| 5010-0039 | V-MUX Electrical system for aerials. | 1 |
| 5010-0059-339 | VFD Text display for V-MUX electrical system. Location: center of dash. | 1 |
| **LIGHT BARS** | | |
| 5300-0506-000-4V | Light bar LED color: Red/White with clear lenses | 1 |
| 5300-0515 | Whelen MKEZ7 1.5" standard mount for mini front light bars (4). | 1 |
| 5300-0524-035 | Whelen F4 Mini-Freedom LED light bars (PR) 21.5" with 5 LEDs' in each bar. Location: front cab corners at 20 degree angle. | 1 |
| **WARNING LIGHT PACKAGES** | | |
| 5550-0054-537 | Whelen 600 series Super LED lower level warning light package. Includes (10) red LED light heads w/chrome flanges. Locate side facing lights: at forward most position, on side of cab down low just ahead of rear door, and on rear fixed outrigger cover. | 1 |
| **WARNING LIGHTS** | | |
| 5600-0078-268-06 | Whelen Super LED beacon (PR) model L31H with Red domes. Location each side of pump module offset to the rear. | 1 |
| 5600-0078-479-06 | Whelen Super LED beacon (PR) model L31H with Red domes. Location rear upper body on aerial style brackets. | 1 |
| 5600-0105-170 | Hazard (door ajar) light 2" LED. Location: center overhead. | 1 |
| **SIRENS** | | |
| 5500-0015 | Whelen model 295SLSA1 siren with microphone (replaced 295HFSA1). | 1 |
| 5500-0024-170 | The electronic siren control is to be located on the center overhead. | 1 |
| **SPEAKERS** | | |
| 5510-0029-209 | Speaker, Federal Signal Dynamax ES100 with "E-ONE" grille through bumper. Location: driver side front bumper. | 1 |
| **DOT LIGHTING** | | |
| 5150-0006 | Whelen 600 series LED horizontal mount tail lights. Includes LED stop/tail, arrow turn and halogen | 1 |

| | | |
|---|---|---|
| | back-up lights with horizontal Cast 3 housing and weatherproof connectors. | |
| 5150-0017 | License plate light LED with chrome housing located at the rear of the body. | 1 |
| 5150-0026 | Marker light LED body/cab package. E-ONE custom cab with aerial ladder, Mid-Mount platform or Bronto bodies only. | 1 |

| LIGHTS - COMPARTMENT, STEP & GROUND | | |
|---|---|---|
| 5380-0030 | Ground light package LED - small. | 1 |
| 5380-0036 | Step light package body LED - small. | 1 |
| 5380-0077 | Compartment light package Amdor Luma-Bar LED for medium bodies. Includes one light per compartment (two if transverse). | 1 |

| LIGHTS - DECK AND SCENE | | |
|---|---|---|
| 5390-0007 | Deck/scene light circuit wiring through chassis reverse. Requires rear deck or scene light. | 1 |
| 5390-0076 | Hose bed light Truck-Lite LED model 81380. Locate at front of hose bed. Switched with work light switch in cab. | 1 |
| 5390-0102 | Crosslay light Truck-Lite LED model 81380. Locate to rear of crosslay (SM) and forward of crosslay (TM as applicable). Switched with work light switch in cab. | 1 |
| 5390-0152-445 | Whelen 600 series gradient Super LED surface mounted scene lights (PR) with weatherproof connectors. Switch in cab (driver and officer side lights switched separately). Locate up high on rear access door. | 1 |

| LIGHTS - NON-WARNING | | |
|---|---|---|
| 5400-0003 | Engine compartment light (EA). | 1 |
| 5400-0010 | Incandescent pump compartment light (EA). | 1 |
| 5400-0054 | Spotlight Specialty 2150 hand held located on officer's side of cab dash w/12V receptacle. | 1 |
| 5400-0092 | Weldon pump panel LED light package with (3) lights per side pump panel. Pump panels over 45" may require additional lights. Side mount only. | 1 |

| CONTROLS / SWITCHES | | |
|---|---|---|
| 5100-0000-199 | Foot switch to control air horns located officer's side. | 1 |
| 5100-0007-198 | Foot switch to control electronic siren located driver's side. | 1 |

| CAMERAS / INTERCOM | | |
|---|---|---|
| 5350-0156 | FRC ACT 2-way aerial intercom. | 1 |

| MISC ELECTRICAL | | |
|---|---|---|
| 1750-0082-762 | 12V power distribution module. Includes (6) battery hot and (6) switched hot circuits. 100 amps max (IATS). Location: behind officer's seat. | 1 |
| 5110-0017 | Back-up alarm 97 dB. | 1 |

| LIGHTS - QUARTZ | | |
|---|---|---|
| 5450-0144-063 | Fire Research, FRC Evolution 12V LED scene light model FCA530-V15-SW-H with external push-up pole. Includes switch in cab accessible to driver. Location: officer side back of cab. | 1 |
| 5450-0144-064 | Fire Research, FRC Evolution 12V LED scene light model FCA530-V15-SW-H with external push-up pole. Includes switch in cab accessible to driver. Location: driver side back of cab. | 1 |

| AERIAL MODEL | | |
|---|---|---|
| 6100-0005 | Ladder HP75 with waterway. Includes left side console with cover, split steps at tip and jack leg flood lights. | 1 |

| AERIAL HYDRAULIC SYSTEM OPTIONS | | |
|---|---|---|
| 6150-0003-216 | Gauge aerial hydraulic oil level. Electronic display to be located on pump operator's panel. | 1 |

| AERIAL CONTROLS | | |
|---|---|---|
| 6850-0026 | Direct hydraulic aerial control system. | 1 |

| MONITORS |
|---|

| | | |
|---|---|---|
| 6300-0002 | Monitor Akron electric 1000 GPM for ladder. Includes tip and base controls. | 1 |
| **AERIAL WARNING LIGHTS** | | |
| 6550-0001 | Outrigger warning lights (PR) LED. Truck-Lite model 91R. | 1 |
| **AERIAL LIGHTING** | | |
| 6560-0127 | FireTech model FT-WL3500-FT-W LED flood/spot light. Includes hardwired switch on turntable console. Location: left and right side of base section. | 1 |
| 6560-0163-232 | Light Whelen Micro Pioneer model MPPWCS low profile pedestal mount. Switched at light head and base console. Location(s): right side tip. | 1 |
| **WATERWAY OPTIONS** | | |
| 6350-0005 | Rear 4" NST waterway inlet for rear mounted aerials. Includes chrome cap. | 1 |
| 6350-0010 | Flowminder with single readout and totalizer for the aerial waterway to be located at the aerial control station. | 1 |
| 6350-0067 | 2.5" Innovative Controls stainless steel case pressure gauge (0-400) with color code bezel. Locate next to waterway inlet. | 1 |
| **AERIAL LADDER BRACKETS** | | |
| 6600-0002-248 | Roof ladder bracket J style mount. Locate outside base section for a PRL-14 on left side of base section. Available on HP75/78, HP100, and HP95. | 1 |
| **SIGN PLATES** | | |
| 6750-0000-000-39 | Aerial sign plates 10 x 144 (PR). Available on Booms, HP75 and HP100 only. Does not include lettering. Color: Job Color. | 1 |
| **AERIAL TESTING** | | |
| 6900-0000 | Aerial flow test - 3rd party. | 1 |
| 6900-0007 | Aerial 2016 NFPA Certification. | 1 |
| **ELBOWS** | | |
| 7400-0004 | Elbow 30 degree chrome swivel w/2.5"FNST x 2.5"MNST. | 2 |
| **ADAPTERS** | | |
| 7200-0026 | Swivel Connector 4" FNST x 5" Storz 30 Deg Elbow with Tethered Cap. | 1 |
| **HAND TOOLS** | | |
| 7600-0005 | Pike Pole Fiberglass 6'. | 2 |
| 7600-0006 | Pike Pole Fiberglass 8'. | 2 |
| 7600-0008 | Pike Pole Fiberglass 12'. | 2 |
| **GROUND LADDERS** | | |
| 7800-0010 | Alco-Lite PRL-16' roof ladder. | 2 |
| 7800-0016 | Alco-Lite PEL-24' 2-section extension ladder. | 1 |
| 7800-0023 | Alco-Lite PEL3-35' 3-section extension ladder. | 1 |
| 7800-0032 | Alco-Lite FL-10, 10' folding ladder w/safety shoes. | 1 |
| **MISC LOOSE EQUIPMENT** | | |
| 7600-0016 | Wheel chocks 44" NFPA compliant, pair (PR) of Zico SAC-44. Up to 44" diameter tires. Includes mounting brackets. | 4 |
| 7900-0014 | DOT Required Drive Away Kit - Kit includes three (3) triangular warning reflectors with carrying case. This kit is for the end user and is to remain with the truck. | 1 |
| **EXTERIOR PAINT** | | |
| 8100-0071 | Undercoating E-ONE. | 1 |
| 8100-0089 | All applicable pump/pre-connect application modules are to have a sanded finish (not painted job color). Includes upper and lower pump modules, crosswalk module and/or speedlay/pre-connect module (as applicable). Rear mounted body/pump module to be painted job color. | 1 |
| 8100-0116 | Rear body surface to have a sanded finish (not painted job color). Includes hinged doors that do not have discrete sales codes and removable panels. | 1 |
| 8100-0176-000-17 | Paint E-ONE chassis cab - Sikkens paint. Color: FLNA3225E-1 Red. | 1 |
| 8100-0183-000-17 | Paint Body - Large - For Aerials, T/A Tankers/Wetsides, Rear Mounts and Rescues. Sikkens paint. | 1 |

| | | |
|---|---|---|
| | Color: FLNA3225E-1 Red. | |
| 8100-0186-000-39 | Paint exterior surface of outer steel wheels. Sikkens paint. Color: Job Color. | 1 |
| 8100-0356 | Paint lift cylinders, extension cylinders and upper turntable steelwork FLNA4006 white (does not apply to TT deck). | 1 |
| **INTERIOR PAINT** | | |
| 8150-0011 | The interior of the cab to be painted Zolatone gray. | 1 |
| **STRIPING** | | |
| 8200-0015 | White reflective tape on (2) outriggers. | 1 |
| 8300-0002-334-12 | NFPA Scotchlite Stripe - 4" wide and straight on front/sides of cab and sides/rear of body. Color: White. Location: bottom of stripe flush with top of bumper and straight back. | 1 |
| 8300-0042 | White rubrail scotchlite insert. | 1 |
| 8300-0084-000-72 | Chevron "A" style 6" printed sheet Scotchlite striping full width on rear of body. Includes rear facing extrusions, panels and doors. Colors to be Yellow/Red. | 1 |
| 8300-0313 | Yellow line to indicate designated standing / walking areas above 48" high in compliance with 2016 NFPA 1901. Line to be 1" wide. Steps, ladders and areas with a railing or structure at least 12" high are excluded from requiring the line. | 1 |
| **GRAPHICS** | | |
| 8400-0022 | Logo E-ONE (PR) on aerial lift cylinder. Logo to be black and white reflective material approx 14" long located midway along outward surface of cylinder. | 1 |
| **WARRANTY / STANDARD & EXTENDED** | | |
| 9100-0000 | Standard 1 Year Warranty. | 1 |
| 9100-0003 | Lifetime Frame Warranty. | 1 |
| 9100-0004 | 10 Year/100,000 Mile Structural Warranty for Alum Cab / Body - Statement of Warranty. | 1 |
| 9100-0005 | 10 Year Stainless Steel Plumbing Warranty - Statement of Warranty. | 1 |
| 9100-0007 | 20 Year Aerial Device Structural Warranty - Integrity Limited Warranty. | 1 |
| 9100-0019 | 10 Year Limited Paint and Perforation Warranty - For Sikkens Paint. | 1 |
| 9100-0090 | 25 Year frame rail corrosion warranty. Includes liners (if equipped). | 1 |
| **SUPPORT, DELIVERY, INSPECTIONS AND MANUALS** | | |
| 9300-0000 | Vehicle familiarization aerial (Domestic). | 1 |
| 9300-0009 | Manuals, Operator and Service CD-ROM. | 1 |
| 9300-0016 | Approval Drawings-Standard. | 1 |
| 9300-0316 | Fire Apparatus Safety Guide published by FAMA, latest edition. | 1 |

**PRICE - 2017 E-ONE HP76 AERIAL LADDER QUINT - TYPHOON CHASSIS - $651,209**

# STATE OF OHIO TERM SCHEDULE

## 4200 SURFACE RD
## COLUMBUS, OH 43228

*Quote No: 57490*

**8/27/2016**

**Quote Rev:34 Drawing Rev:8**

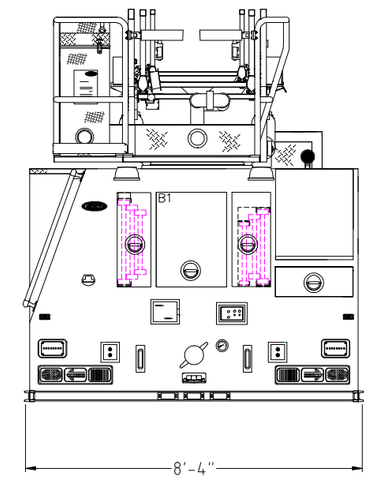


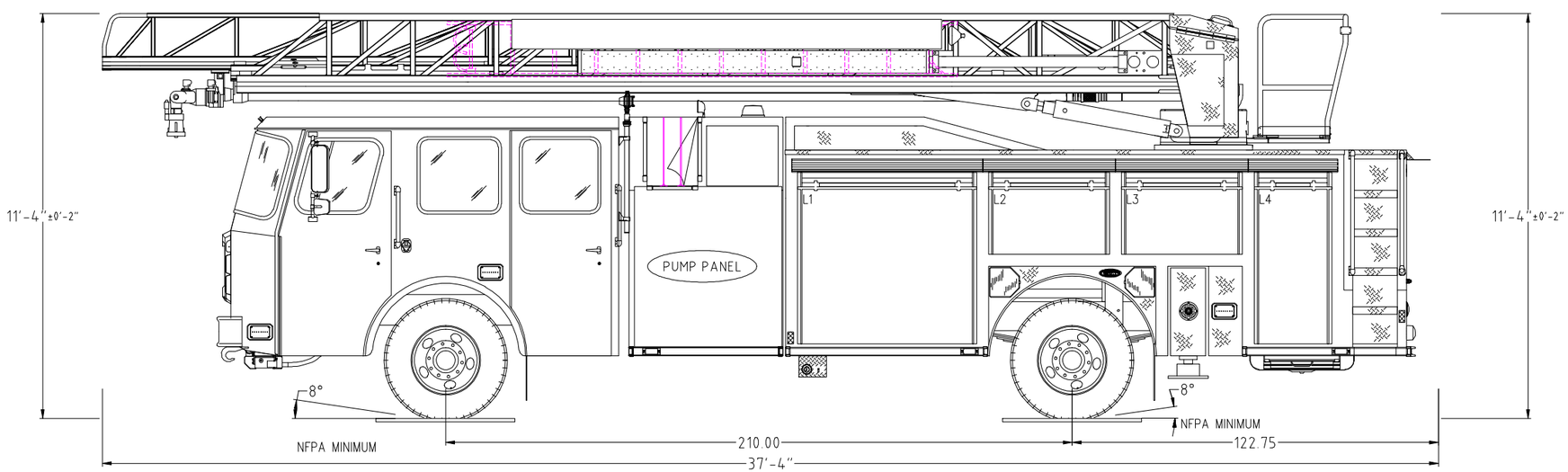


POWERED BY EZDRAW

Notice: This drawing provides a GENERAL REPRESENTATION of the vehicle configuration and should be used for evaluation purposes. The respective dimensions shown,including overall height and length, are estimates and may vary due to manufacturing processes. All other items such as lighting and fixtures, plumbing, compartmentation, and other generally assembled details are shown for REFERENCE ONLY and may not be a direct reflection of the final truck configuration. In ALL situations where this drawing may conflict with the specifications, THE SPECIFICATIONS, AS REFLECTED IN THE APPROVED SHOP ORDER, SHALL PREVAIL. Unless otherwise specified, the proposed apparatus will be manufactured to the latest NFPA recommendations as well as other applicable federally regulated safety regulations. E-One reserves the right to engineer and incorporate design improvements and changes without notice, while adhering to the intent of the specification.

| | HOSE LOADS : |
|---|---|
| 1250 GPM PUMP<br>0 TOTAL VOLUME<br>0 TOTAL FOAM | |

| | OPENING | | INTERIOR DIMENSIONS | | | | |
|---|---|---|---|---|---|---|---|
| COMPT. | WIDTH | HEIGHT | WIDTH | LOWER HEIGHT | LOWER DEPTH | UPPER HEIGHT | UPPER DEPTH |
| L1 | 58 | 53 | 60 | 61 | 26 | 53 | 24 |
| L2 | 38.5 | 23 | 40.5 | N/A | N/A | 23 | 24 |
| L3 | 38.5 | 23 | 40.5 | N/A | N/A | 23 | 24 |
| L4 | 24 | 53 | 26 | 61 | 26 | 53 | 24 |
| R1 | 58 | 53 | 60 | 61 | 26 | 53 | 23 |
| R2 | 47 | 26 | 47 | 30 | 26 | N/A | N/A |

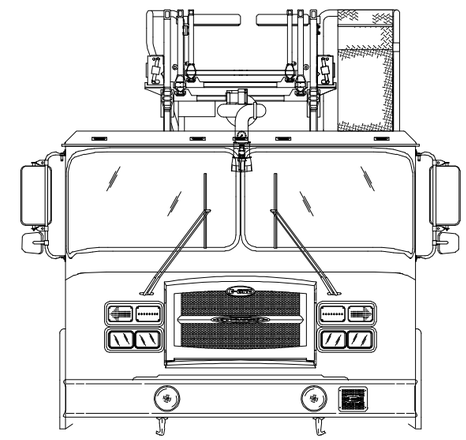

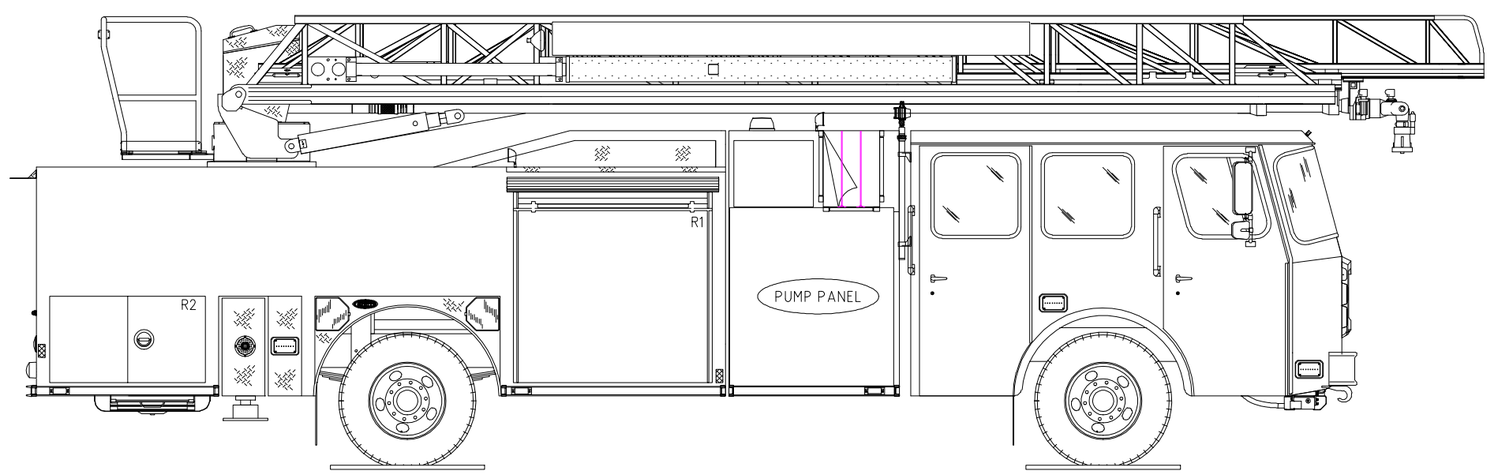


POWERED BY EZDRAW

Fire Apparatus Quotation for:
STATE OF OHIO TERM SCHEDULE

Quotation Number: 57491 Rev: 31

Unit Description: AERM-TYPH-078L
Quote Description: Aerial Rear Mount, Typhoon, HP78 Ladder

| Salescode | Extended Description | Qty |
|---|---|---|
| **TESTING COMPLIANCE STANDARD** | | |
| 1001-0065 | The E-ONE supplied components of the vehicle shall meet the requirements of NFPA 1901, 2016 edition. | 1 |
| 3090-0001 | Hosebed hoseload allowance on the apparatus shall be 1000 lbs. | 1 |
| 3090-0002 | OAH. Unit has no overall height restrictions. | 1 |
| 3090-0004 | OAL. Unit has no overall length restrictions. | 1 |
| 3340-1137-12C | Equipment allowance on the apparatus shall be 2500 lbs. This allowance is in addition to the weight of the hoses and ground ladders listed in the shop order as applicable. | 1 |
| **BUMPERS** | | |
| 1160-0000 | Bumper 10" stainless steel. | 1 |
| 1160-0008 | 3/16" Front Bumper Gravel Shield. | 1 |
| 1160-0013 | 16" Front Bumper Gravel Shield Extension. | 1 |
| **FRAME ASSEMBLY** | | |
| 1250-0081 | Frame assembly with 12 x 3.5 x .375 powder coated galvanized rails. | 1 |
| 1250-0084 | Frame liner 11.125 x 3.125 x .375, galvanized and powder coated. | 1 |
| **AXLE OPTIONS** | | |
| 1025-0012 | Meritor FL-943 front axle 21,000 lb. | 1 |
| 1025-0028 | Koni shock absorbers for front axle - adjustable. | 1 |
| 1025-0097 | Meritor RS-30-185 single rear axle 33,000 lb. capacity. Requires 16.5" x 8.625" cast shoe brakes and 33K suspension. | 1 |
| **SUSPENSIONS** | | |
| 1070-0017 | Reyco rear spring suspension w/aux 33K rating. | 1 |
| **WHEEL OPTIONS** | | |
| 1050-0007 | Front axle wheel trim kit. Includes stainless steel lug nut covers (chrome plated plastic if applicable) and center cap with E-ONE logo. Note: Center cap will have an inspection port IPO a logo if equipped with Stemco oil seals. | 1 |
| 1050-0008 | Rear axle (single) wheel trim kit. Includes stainless steel lug nut covers (chrome plated plastic if applicable) and center cap with E-ONE logo. E-ONE custom chassis w/steel wheels will have chrome plated plastic lug covers. | 1 |
| 1050-0044 | Accuride aluminum wheels for front axle (2). | 1 |
| 1050-0045 | Accuride aluminum wheels for rear axle (4). | 1 |
| **TIRE OPTIONS** | | |
| 1060-0017 | Four Michelin 315 rear tires with XDN2 mud and snow tread. | 1 |
| 1060-0046 | Two Michelin 425 tires model XFE for front axle. | 1 |
| 1060-0117 | RWC AirGuard LED tire pressure monitoring valve stem caps (6) for single rear axle applications. | 1 |
| **BRAKE SYSTEMS** | | |
| 1100-0001 | Meritor EX225H 17" disc brakes for front axle. | 1 |
| 1100-0005 | Brake system air 4X2/4X4. | 1 |
| 1100-0006 | Parking brake release mounted on the driver's side lower dash. | 1 |
| 1100-0036 | 16.5'' x 8.625'' P-Cast S-cam brakes for 27,000 - 33,000 Meritor axle. | 1 |
| **AIR SYSTEM OPTIONS** | | |
| 1110-0000-001 | Inlet for air system. Location: driver door jamb. | 1 |

| | | |
|---|---|---|
| 1110-0002 | Air dryer Bendix AD-9. | 1 |
| 1110-0006 | Air lines nylon. | 1 |
| 1110-0026 | Air horns recessed in bumper (PR). | 1 |
| 1110-0027 | Isolated air tank. Includes pressure protection valve. | 1 |
| 1110-0043 | Auxiliary air tank to be plumbed to the following optional accessories (if equipped): Chassis air horns, brake system air outlet, air reel, light tower, air primer and or customer/dealer supplied pneumatic add-on(s). | 1 |
| ENGINES & TRANSMISSIONS | | |
| 1200-0017 | Push-button transmission shift selector. | 1 |
| 1200-0020 | TransSynd synthetic transmission fluid for EVS3000. | 1 |
| 1200-0096 | Electronic speed limiting set at 60 MPH. | 1 |
| 1200-0313 | Eng/Trans Cummins ISL 450HP/EVS3000 2016 EPA compliant engine. | 1 |
| SECONDARY BRAKING | | |
| 1125-0002 | Jacobs engine compression brake. | 1 |
| 1125-0023 | Transmission to seek second gear when Jacobs engine brake or Telma retarder is engaged. N/A with Trans retarder. | 1 |
| COOLING PACKAGE | | |
| 1800-0013 | Cooling system for use with Cyclone II X, Typhoon X, and Quest chassis. For use with 2010 / 2013 / 2016 EPA engines. Includes coolant recovery system. | 1 |
| FUEL SYSTEMS | | |
| 1350-0003 | Fuel system 50 gallon. | 1 |
| 1350-0011 | Fuel pump electric w/re-prime. | 1 |
| 1350-0012-670 | Fuel shut-off valve. Location: one (1) inlet side of OEM fuel filter. | 1 |
| 1350-0022 | Fuel line hose rubber. | 1 |
| ALTERNATOR | | |
| 1700-0005 | Alternator Leece Neville 320 amp. 320 amp SAE/275 amp NFPA. | 1 |
| BATTERIES | | |
| 1400-0002 | Battery four group 31 1000 CCA. | 1 |
| CHASSIS OPTIONS | | |
| 1680-0005 | Thermatic fan clutch. | 1 |
| 1680-0006 | Drivelines 1710. | 1 |
| 1680-0012 | Tow eyes rear frame painted. | 1 |
| 1680-0042 | Tow hooks front painted in the down position. | 1 |
| 1680-0051 | Aerial hydraulic activation system. | 1 |
| 1680-0250-M58 | Diesel Exhaust Fluid (DEF) 5 gallon tank for 2013 / 2016 EPA engines. Location: left side below rear of cab. | 1 |
| CAB MODEL | | |
| 1520-0012 | Typhoon X long cab with 67.5" CA | 1 |
| CAB ROOF TYPE | | |
| 1615-0010 | Cab roof to be "flat" (non-vista). | 1 |
| CAB BADGE PACKAGE | | |
| 1610-0000 | Cab and body to have applicable E-ONE logos. | 1 |
| GRILLE | | |
| 1620-0004 | ABS chrome plated grille. | 1 |
| CAB DOOR OPTIONS | | |
| 1550-0003 | Rear crew cab doors in the medium position. | 1 |
| 1550-0005 | Driver and officer cab door windows. Include forward vent windows. | 1 |
| 1550-0011 | Rear crew cab door windows. Includes manual roll-down actuation. Not available on Typhoon or CII with paddle style door latching. | 1 |
| 1550-0016 | Cab door panels ABS. | 1 |
| 1550-0025 | All cab doors shall have "L" style exterior latches. | 1 |
| 1550-0027 | Front cab door windows to have manual actuation. | 1 |
| 1550-0038-659 | (4) LED cab step area lighting. Locate each light on each cab door in the inboard position. Lights to be | 1 |

| | | |
|---|---|---|
| | switched with door ajar. | |
| 1550-0044 | All cab door kick plates to be made from diamond plate aluminum. | 1 |
| 1550-0059-000-G6 | Reflective Red/Lemon Yellow printed striping positioned in the "A" formation located on the cab door panels. | 1 |
| 1550-0077 | Interior cab door locks - manual. Will have manual actuation from each respective door. Includes barrel style key lock on each exterior cab door. | 1 |
| 1550-0084 | All cab exterior access doors to have 1250 keyed locks. | 1 |

| CAB STEP OPTIONS | | |
|---|---|---|
| 1640-0045-158 | Step below cab door. Open back style with angled corners. Located driver's front door. Steps under front cab doors shall not interfere with approach angle. | 1 |
| 1640-0045-159 | Step below cab door. Open back style with angled corners. Located officer's front door. Steps under front cab doors shall not interfere with approach angle. | 1 |
| 1640-0045-160 | Step below cab door. Open back style with angled corners. Located driver's rear door. Steps under front cab doors shall not interfere with approach angle. | 1 |
| 1640-0045-161 | Step below cab door. Open back style with angled corners. Located officer's rear door. Steps under front cab doors shall not interfere with approach angle. | 1 |

| MIRRORS | | |
|---|---|---|
| 1670-0003 | Velvac 2010 mirrors. Door mounted west coast style with remote control and heat. | 1 |

| MISC EXTERIOR CAB OPTIONS | | |
|---|---|---|
| 1550-0020 | Windows cab side fixed driver's side. | 1 |
| 1550-0033 | Windows cab side fixed officer's side. | 1 |
| 1675-0022 | Pair of 18" handrails located just behind driver and officer front door one each side. | 1 |
| 1675-0023 | Pair of 18" handrails located just behind driver and officer rear door (ALS doors if equipped) one each side. | 1 |
| 1675-0030 | Mud flaps, front, black with E-ONE logo. | 1 |
| 1675-0046 | Rear cab wall to be smooth 3/16" aluminum plate. Cab wall to be finish painted to match the cab paint scheme. | 1 |
| 1675-0201 | Large radius cab wheel well. Includes bolt-on adjustable wheel well trim. | 1 |
| 1675-0202 | Mounting plate for battery charger receptacle, indicator and air inlet (if applicable). Plate to be removable brushed stainless steel. | 1 |

| HVAC | | |
|---|---|---|
| 1515-0017 | Air conditioning for the Typhoon X, CII X and Quest with Cummins ISC/ISL engine and radiator mounted condenser. | 1 |
| 1515-0053 | Controls for heating and air conditioning shall be located in the center dash area. (Lower area on Typhoon and CII with severe duty dash) | 1 |

| SEATS | | |
|---|---|---|
| 1510-0003 | Seats, Inc. brand 911 cab seats. | 1 |
| 1510-0008 | Seat color gray. | 1 |
| 1510-0035-147 | Universal air pack bottle bracket (EA). Location: officer's seat. | 1 |
| 1510-0035-148 | Universal air pack bottle bracket (EA). Location: rear facing driver's side. | 1 |
| 1510-0035-151 | Universal air pack bottle bracket (EA). Location: inboard driver's side rear wall. | 1 |
| 1510-0035-152 | Universal air pack bottle bracket (EA). Location: inboard officer's side rear wall. | 1 |
| 1510-0035-215 | Universal air pack bottle bracket (EA). Location: rear facing officer's side. | 1 |
| 1510-0038 | Driver seat 911 air ride. | 1 |
| 1510-0042 | Officer seat to be 911 fixed SCBA. | 1 |
| 1510-0050 | Rear facing 911 seat with SCBA driver's side. | 1 |
| 1510-0053 | Rear facing 911 seat with SCBA officer's side. | 1 |
| 1510-0062 | Two man bench centered on rear wall with 911 SCBA backs. Includes angled corners. | 1 |
| 1510-0234 | Seat cover material Turnout Tuff. | 1 |
| 1685-0033 | Seating capacity tag of six occupants. | 1 |

| MISC INTERIOR CAB OPTIONS | | |
|---|---|---|
| 1685-0000 | Cab interior gray. Does not include engine cover or seat color. | 1 |
| 1685-0005 | Lexan sun visors, driver and officer's side overhead. | 1 |
| 1685-0168 | ABS Dash package. Includes center and officer side dash, lower kick panels and "A" post covers. | 1 |

| | | |
|---|---|---|
| 1685-0187 | Severe duty engine cover, molded polyurethane. | 1 |
| **CAB ELECTRICAL OPTIONS** | | |
| 1750-0013-172 | Turn signal Whelen 600 LED amber arrow pair located upper headlight bezel. | 1 |
| 1750-0024-179-04 | Auto-Eject receptacle inlet 20 amp located outside driver's door next to handrail with a Yellow cover. | 1 |
| 1750-0029 | Switch horn button two position DOT/air horn. | 1 |
| 1750-0046-195 | Cab Headlights. Position: lower. | 1 |
| 1750-0072-593 | 12 VDC (or 24VDC) electrical outlet in the cab wired battery hot. Location: officer side dash. | 2 |
| 1750-0075 | English dominant main cab gauge cluster. | 1 |
| 1750-0158 | Dome Lts Red/White LED. Package includes two lights mounted in the front and two mounted in the rear of the cab. White light wired through door and light assembly switch. Red light through light assembly switch. | 1 |
| 1750-0198-A31 | Battery charger to be located behind driver's seat. | 1 |
| 1750-0343 | Battery charger E-ONE LPC 20. 120 volt inlet, 20 amp output. | 1 |
| 1750-0435 | Halogen cab headlights. TyphoonX, CIIX and QST2 only. | 1 |
| 1750-0449 | Momentary DPF regeneration override switch. | 1 |
| **BODY MODEL** | | |
| 3080-0064 | Body aerial HP75 / HP78 SideStacker Quest / CII / Typhoon with pump. Single axle. Includes extended R1 compt and pocket style drop down step at left rear staircase. The rear access doors to match the rear body finish. | 1 |
| **BODY COMPT REAR** | | |
| 3110-0360 | Rear of body to have un-painted smooth plate overlay style body panels to facilitate rear body striping. | 1 |
| **AERIAL BODY OPTIONS** | | |
| 3310-0050 | Crosslay triple 5.5" wide single stack to hold up to 200' of 2.0" DJ (each) or 150'-200' 2.5" DJ (each). Includes storage pan to rear of crosslays | 1 |
| 3310-0097 | Hose bed depth 26" HP75 / HP78 SideStacker with tall R1. Will hold up to 800' of 5" LDH and up to 300-400' of 2.5 or 3" DJ. Capacity will be reduced with optional diamond plate covers. | 1 |
| 3310-0128 | Pike pole/Ladder storage. Available on HP75/78 SideStacker with tall R1 & HM100/110 SideStacker only. The access door to match the rear body finish. | 1 |
| 3310-0161 | Jack leg opening covers diamond plate (2) sets. Includes diamond plate outrigger covers and fixed diamond plate filler panels. | 1 |
| 3310-0314 | Auxiliary jack pad 24X24 (2) with 20 degree formed handle. Includes mounting brackets. | 1 |
| **DOORS** | | |
| 3300-0017-004 | Door roll up short (up to 45") with satin finish ROM. Location(s): L2. | 1 |
| 3300-0017-005 | Door roll up short (up to 45") with satin finish ROM. Location(s): L3. | 1 |
| 3300-0019-003 | Door roll up tall (greater than 45") with satin finish ROM. Location(s): L1. | 1 |
| 3300-0019-006 | Door roll up tall (greater than 45") with satin finish ROM. Location(s): L4. | 1 |
| 3300-0019-015 | Door roll up tall (greater than 45") with satin finish ROM. Location(s): R1. | 1 |
| 3300-0164-016 | Door double vertical hinged w/rotary latches - painted . Location(s): R2 | 1 |
| **SHELVES** | | |
| 3370-0052-069 | Adjustable shelf (J-Style) for non-transverse compartments 16" or greater in depth. Location: L1 lower. | 1 |
| 3370-0052-073 | Adjustable shelf (J-Style) for non-transverse compartments 16" or greater in depth. Location: R1 lower. | 1 |
| 3370-0052-079 | Adjustable shelf (J-Style) for non-transverse compartments 16" or greater in depth. Location: L4 lower. | 1 |
| 3370-0054-069 | Tracks for adjustable shelf and/or adjustable tray in compartments 16" or greater in depth. Location: L1 lower. | 1 |
| 3370-0054-073 | Tracks for adjustable shelf and/or adjustable tray in compartments 16" or greater in depth. Location: R1 lower. | 1 |
| 3370-0054-079 | Tracks for adjustable shelf and/or adjustable tray in compartments 16" or greater in depth. Location: L4 lower. | 1 |

| | | |
|---|---|---|
| **COVERS** | | |
| 3305-0007-000-02 | Vinyl Red hose bed cover with attached rear flap(s). | 1 |
| 3305-0008-000-02 | Vinyl Red crosslay cover with attached side flaps. | 1 |
| **PUMP MODULE** | | |
| 3130-0076 | Pump panel opening is 47" wide. | 1 |
| **PUMP PANELS** | | |
| 3134-0016 | Stainless steel driver and officer side pump panels. | 1 |
| **PUMP PANELS** | | |
| 3134-0055 | Officer side upper pump access panel to be horizontal hinged with stainless steel door. Includes (2) push button latches and (2) hold open devices. | 1 |
| 3134-0064 | The gauge panel(s) on the driver side of the Side Mount module to be hinged upward. Panel(s) to include (2) mechanical/pneumatic (as applicable to panel size) hold opens and latches. | 1 |
| **MISC PUMP PANEL OPTIONS** | | |
| 4460-0003 | Pump panel tags color coded per NFPA compliance. | 1 |
| **WATER TANK** | | |
| 4010-0198 | 500 gallon "T" water tank. UPF Poly III blue fill tower. | 1 |
| **TANK PLUMBING** | | |
| 4450-0010 | 2" tank fill Akron manual valve. | 1 |
| 4450-0022 | 3" tank to pump Akron manual valve. | 1 |
| **LADDER STORAGE / RACKS** | | |
| 3365-0167-C85 | Dual ladder tunnel for HP75 / HP78 SideStacker with tall R1 compartment. Ladder rack to hold: PEL3-35, PEL-28 and PRL-16. | 1 |
| **HANDRAILS / STEPS** | | |
| 3330-0002-050 | Slide-out platform, rollerless. Includes chrome grab handle centered on the front face of the platform (includes hand rail as applicable). Located below driver side pump panel. | 1 |
| 3330-0100-M20 | Step below body. Located below rear of officer side pump panel. Each location requires a minimum of (1) handrail / handhold per NFPA. | 1 |
| 3330-0279-060 | Innovative Controls dual lighted LED folding step. Location: officer side front compartment face. Each location requires a minimum of (1) handrail per NFPA. | 3 |
| 3330-0279-062 | Innovative Controls dual lighted LED folding step. Location: driver side front compartment face. Each location requires a minimum of (1) handrail per NFPA. | 3 |
| **MISC BODY OPTIONS** | | |
| 3340-0093 | Mud flaps, rear, black with E-ONE logo. | 1 |
| 3340-0270 | The painted aerial body side panels shall be smooth / flush. Applies to SideStacker HB side, panels next to water tank on MM, and upper body sides on RLP. | 1 |
| 3340-0486 | Diamond plate single axle wheel well. Includes bolt-on composite wheel well liners and bolt-on polished alum fenderettes. | 1 |
| **SCBA BOTTLE STORAGE** | | |
| 3320-0061 | SCBA Bottle Storage. (4) Cast Product SCBA bottle storage doors. (2) each side in rear wheel well area. | 1 |
| 3320-0100 | Strap(s), loop style to retain SCBA bottle(s). Locate one per bottle in each exterior storage compartment. | 4 |
| **PUMPS** | | |
| 4005-0031 | Rating 1500 GPM. | 1 |
| 4005-0196 | Hale QMAX 1000-2250 GPM single stage pump. Requires primer option. | 1 |
| **PUMP CERTIFICATION** | | |
| 4475-0000 | Pump certification 750-2250 GPM | 1 |
| **PUMP OPTIONS** | | |

| | | |
|---|---|---|
| 4015-0008 | Zinc anodes for Hale pump (PR), (1) discharge side and (1) intake side. | 1 |
| 4015-0022 | Mechanical pump seal - Hale. | 1 |
| 4015-0052-198 | Steamers to be Flush. Location: driver's side. | 1 |
| 4015-0052-199 | Steamers to be Flush. Location: officer's side. | 1 |
| 4015-0073 | Manual operated master pump drain. The master drain shall be clearly marked and placed in accessible location below running board on driver side or L1 compartment. | 1 |
| 4015-0210 | Pump cooler with Innovative Control 1/4 turn valve with "T" handle and label. | 1 |
| 4015-0238 | Hale electric primer (oil-less). | 1 |

| INTAKES | | |
|---|---|---|
| 4440-0005 | 2.5" Left Intake Akron Manual Valve. | 1 |

| INTAKE OPTIONS | | |
|---|---|---|
| 4445-0009 | Intake relief valve, Akron. | 1 |

| DISCHARGES AND PRECONNECTS | | |
|---|---|---|
| 4415-0012-654 | 1.5" Crosslay with Akron manual valve. Location: crosslay 1 & 2. | 2 |
| 4415-0014-581 | 2.5" Left Pump Panel Discharge Akron Manual Valve. Location: left side discharge 1. | 1 |
| 4415-0014-582 | 2.5" Left Pump Panel Discharge Akron Manual Valve. Location: left side discharge 2. | 1 |
| 4415-0016-584 | 2.5" Right Pump Panel Discharge Akron Manual Valve. Location: right side discharge 2. | 1 |
| 4415-0051 | 4" Waterway Discharge with 3" Akron Manual Valve. | 1 |
| 4415-0054-583 | 4" Right Pump Panel Discharge with 3" Akron Manual Valve (Waterous pumps noted location to be forward lower port). Location: right side discharge 1. | 1 |
| 4415-0058-655 | 2.5" Crosslay Akron Manual Valve. Location: crosslay 3. | 1 |

| DISCHARGE OPTIONS | | |
|---|---|---|
| 4417-0175 | Innovative Controls push/pull valve controls with locking T handles. | 1 |
| 4417-0177 | Innovative Controls 3/4" bleeder/drain valve include 1/4 turn T-handle. | 8 |
| 4417-0185 | Innovative Controls discharge and intake bezels with integral color code and verbiage for side mount pump panel. | 1 |

| PRESSURE GOVERNORS | | |
|---|---|---|
| 4465-0011 | Class 1 TPG pressure governor. Includes, water, oil, volt and tachometer. | 1 |

| GAUGES | | |
|---|---|---|
| 4435-0083 | Innovative Controls 10 LED SL series water tank level gauge. On pump panel. | 1 |
| 4435-0246 | 2.5" Innovative Controls stainless steel case pressure gauge (0-400) with color code bezel. | 8 |
| 4435-0247 | 4" Innovative Controls stainless steel case master pressure gauges with bezel. Intake 30-0-400, and discharge 0-400. | 1 |

| ELECTRICAL SYSTEMS | | |
|---|---|---|
| 5010-0013-Y83 | Vehicle data recorder - 2009 / 2016 NFPA compliant. Includes occupant detection with display. Display location: inboard on driver's side overhead console. | 1 |
| 5010-0039 | V-MUX Electrical system for aerials. | 1 |
| 5010-0059-339 | VFD Text display for V-MUX electrical system. Location: center of dash. | 1 |

| LIGHT BARS | | |
|---|---|---|
| 5300-0506-000-4V | Light bar LED color: Red/White with clear lenses | 1 |
| 5300-0515 | Whelen MKEZ7 1.5" standard mount for mini front light bars (4). | 1 |
| 5300-0524-034 | Whelen F4 Mini-Freedom LED light bars (PR) 21.5" with 5 LEDs' in each bar. Location: front cab corners. | 1 |

| WARNING LIGHT PACKAGES | | |
|---|---|---|
| 5550-0054-537 | Whelen 600 series Super LED lower level warning light package. Includes (10) red LED light heads w/chrome flanges. Locate side facing lights: at forward most position, on side of cab down low just ahead of rear door, and on rear fixed outrigger cover. | 1 |

| WARNING LIGHTS | | |
|---|---|---|
| 5600-0078-268-06 | Whelen Super LED beacon (PR) model L31H with Red domes. Location each side of pump module offset to the rear. | 1 |
| 5600-0078-479-06 | Whelen Super LED beacon (PR) model L31H with Red domes. Location rear upper body on aerial style | 1 |

| | | |
|---|---|---|
| | brackets. | |
| 5600-0105-170 | Hazard (door ajar) light 2" LED. Location: center overhead. | 1 |
| SIRENS | | |
| 5500-0015 | Whelen model 295SLSA1 siren with microphone (replaced 295HFSA1). | 1 |
| 5500-0024-170 | The electronic siren control is to be located on the center overhead. | 1 |
| SPEAKERS | | |
| 5510-0029-209 | Speaker, Federal Signal Dynamax ES100 with "E-ONE" grille through bumper. Location: driver side front bumper. | 1 |
| DOT LIGHTING | | |
| 5150-0006 | Whelen 600 series LED horizontal mount tail lights. Includes LED stop/tail, arrow turn and halogen back-up lights with horizontal Cast 3 housing and weatherproof connectors. | 1 |
| 5150-0017 | License plate light LED with chrome housing located at the rear of the body. | 1 |
| 5150-0026 | Marker light LED body/cab package. E-ONE custom cab with aerial ladder, Mid-Mount platform or Bronto bodies only. | 1 |
| LIGHTS - COMPARTMENT, STEP & GROUND | | |
| 5380-0032 | Ground light package LED - large. | 1 |
| 5380-0036 | Step light package body LED - small. | 1 |
| 5380-0077 | Compartment light package Amdor Luma-Bar LED for medium bodies. Includes one light per compartment (two if transverse). | 1 |
| LIGHTS - DECK AND SCENE | | |
| 5390-0007 | Deck/scene light circuit wiring through chassis reverse. Requires rear deck or scene light. | 1 |
| 5390-0076 | Hose bed light Truck-Lite LED model 81380. Locate at front of hose bed. Switched with work light switch in cab. | 1 |
| 5390-0102 | Crosslay light Truck-Lite LED model 81380. Locate to rear of crosslay (SM) and forward of crosslay (TM as applicable). Switched with work light switch in cab. | 1 |
| 5390-0152-445 | Whelen 600 series gradient Super LED surface mounted scene lights (PR) with weatherproof connectors. Switch in cab (driver and officer side lights switched separately). Locate up high on rear access door. | 1 |
| LIGHTS - NON-WARNING | | |
| 5400-0003 | Engine compartment light (EA). | 1 |
| 5400-0010 | Incandescent pump compartment light (EA). | 1 |
| 5400-0054 | Spotlight Specialty 2150 hand held located on officer's side of cab dash w/12V receptacle. | 1 |
| 5400-0092 | Weldon pump panel LED light package with (3) lights per side pump panel. Pump panels over 45" may require additional lights. Side mount only. | 1 |
| CONTROLS / SWITCHES | | |
| 5100-0000-199 | Foot switch to control air horns located officer's side. | 1 |
| 5100-0007-198 | Foot switch to control electronic siren located driver's side. | 1 |
| CAMERAS / INTERCOM | | |
| 5350-0156 | FRC ACT 2-way aerial intercom. | 1 |
| MISC ELECTRICAL | | |
| 1750-0082-762 | 12V power distribution module. Includes (6) battery hot and (6) switched hot circuits. 100 amps max (IATS). Location: behind officer's seat. | 1 |
| 5110-0017 | Back-up alarm 97 dB. | 1 |
| LIGHTS - QUARTZ | | |
| 5450-0144-063 | Fire Research, FRC Evolution 12V LED scene light model FCA530-V15-SW-H with external push-up pole. Includes switch in cab accessible to driver. Location: officer side back of cab. | 1 |
| 5450-0144-064 | Fire Research, FRC Evolution 12V LED scene light model FCA530-V15-SW-H with external push-up pole. Includes switch in cab accessible to driver. Location: driver side back of cab. | 1 |

| | | |
|---|---|---|
| AERIAL MODEL | | |
| 6100-0028 | Ladder HP78 750 lb tip load with waterway. Includes left side console with cover, split steps at tip and jack leg flood lights. | 1 |
| AERIAL HYDRAULIC SYSTEM OPTIONS | | |
| 6150-0003-216 | Gauge aerial hydraulic oil level. Electronic display to be located on pump operator's panel. | 1 |
| AERIAL CONTROLS | | |
| 6850-0026 | Direct hydraulic aerial control system. | 1 |
| MONITORS | | |
| 6300-0002 | Monitor Akron electric 1000 GPM for ladder. Includes tip and base controls. | 1 |
| 6300-0017 | Monitor painted silver from OEM. | 1 |
| AERIAL WARNING LIGHTS | | |
| 6550-0001 | Outrigger warning lights (PR) LED. Truck-Lite model 91R. | 1 |
| AERIAL LIGHTING | | |
| 6560-0104-232 | Light Whelen Pioneer Plus 12V model PFP1P1 with PBAPEDD pedestal mount. Switched at light head and base console. Location(s): right side tip. | 1 |
| 6560-0127 | FireTech model FT-WL3500-FT-W LED flood/spot light. Includes hardwired switch on turntable console. Location: left and right side of base section. | 1 |
| WATERWAY OPTIONS | | |
| 6350-0005 | Rear 4" NST waterway inlet for rear mounted aerials. Includes chrome cap. | 1 |
| 6350-0010 | Flowminder with single readout and totalizer for the aerial waterway to be located at the aerial control station. | 1 |
| 6350-0067 | 2.5" Innovative Controls stainless steel case pressure gauge (0-400) with color code bezel. Locate next to waterway inlet. | 1 |
| AERIAL LADDER BRACKETS | | |
| 6600-0002-250 | Roof ladder bracket J style mount. Locate outside base section for a PRL-16 on left side of base section. Available on HP75/78, HP100, and HP95. | 1 |
| SIGN PLATES | | |
| 6750-0004-000-39 | Aerial sign plates 12 x 144 (PR). Available on HP78, HP100 and HP100 platform only. Does not include lettering. Color: Job Color. | 1 |
| AERIAL TESTING | | |
| 6900-0000 | Aerial flow test - 3rd party. | 1 |
| 6900-0007 | Aerial 2016 NFPA Certification. | 1 |
| ELBOWS | | |
| 7400-0004 | Elbow 30 degree chrome swivel w/2.5"FNST x 2.5"MNST. | 3 |
| ADAPTERS | | |
| 7200-0026 | Swivel Connector 4" FNST x 5" Storz 30 Deg Elbow with Tethered Cap. | 1 |
| HAND TOOLS | | |
| 7600-0005 | Pike Pole Fiberglass 6'. | 2 |
| HAND TOOLS | | |
| 7600-0006 | Pike Pole Fiberglass 8'. | 2 |
| 7600-0008 | Pike Pole Fiberglass 12'. | 2 |
| GROUND LADDERS | | |
| 7800-0010 | Alco-Lite PRL-16' roof ladder. | 2 |
| 7800-0021 | Alco-Lite PEL-28' extension ladder. | 1 |
| 7800-0023 | Alco-Lite PEL3-35' 3-section extension ladder. | 1 |
| 7800-0032 | Alco-Lite FL-10, 10' folding ladder w/safety shoes. | 1 |
| MISC LOOSE EQUIPMENT | | |
| 7600-0016 | Wheel chocks 44" NFPA compliant, pair (PR) of Zico SAC-44. Up to 44" diameter tires. Includes | 4 |

| | | |
|---|---|---|
| | mounting brackets. | |
| 7900-0014 | DOT Required Drive Away Kit - Kit includes three (3) triangular warning reflectors with carrying case. This kit is for the end user and is to remain with the truck. | 1 |

| EXTERIOR PAINT | | |
|---|---|---|
| 8100-0071 | Undercoating E-ONE. | 1 |
| 8100-0089 | All applicable pump/pre-connect application modules are to have a sanded finish (not painted job color). Includes upper and lower pump modules, crosswalk module and/or speedlay/pre-connect module (as applicable). Rear mounted body/pump module to be painted job color. | 1 |
| 8100-0116 | Rear body surface to have a sanded finish (not painted job color). Includes hinged doors that do not have discrete sales codes and removable panels. | 1 |
| 8100-0176-000-17 | Paint E-ONE chassis cab - Sikkens paint. Color: FLNA3225E-1 Red. | 1 |
| 8100-0183-000-17 | Paint Body - Large - For Aerials, T/A Tankers/Wetsides, Rear Mounts and Rescues. Sikkens paint. Color: FLNA3225E-1 Red. | 1 |
| 8100-0354 | Paint lift cylinders, extension cylinders and upper turntable steelwork primary job color (does not apply to TT deck). | 1 |

| INTERIOR PAINT | | |
|---|---|---|
| 8150-0011 | The interior of the cab to be painted Zolatone gray. | 1 |

| STRIPING | | |
|---|---|---|
| 8200-0015 | White reflective tape on (2) outriggers. | 1 |
| 8300-0002-334-12 | NFPA Scotchlite Stripe - 4" wide and straight on front/sides of cab and sides/rear of body. Color: White. Location: bottom of stripe flush with top of bumper and straight back. | 1 |
| 8300-0042 | White rubrail scotchlite insert. | 1 |
| 8300-0084-000-72 | Chevron "A" style 6" printed sheet Scotchlite striping full width on rear of body. Includes rear facing extrusions, panels and doors. Colors to be Yellow/Red. | 1 |
| 8300-0313 | Yellow line to indicate designated standing / walking areas above 48" high in compliance with 2016 NFPA 1901. Line to be 1" wide. Steps, ladders and areas with a railing or structure at least 12" high are excluded from requiring the line. | 1 |

| GRAPHICS | | |
|---|---|---|
| 8400-0022 | Logo E-ONE (PR) on aerial lift cylinder. Logo to be black and white reflective material approx 14" long located midway along outward surface of cylinder. | 1 |

| WARRANTY / STANDARD & EXTENDED | | |
|---|---|---|
| 9100-0000 | Standard 1 Year Warranty. | 1 |
| 9100-0003 | Lifetime Frame Warranty. | 1 |
| 9100-0004 | 10 Year/100,000 Mile Structural Warranty for Alum Cab / Body - Statement of Warranty. | 1 |
| 9100-0005 | 10 Year Stainless Steel Plumbing Warranty - Statement of Warranty. | 1 |
| 9100-0007 | 20 Year Aerial Device Structural Warranty - Integrity Limited Warranty. | 1 |
| 9100-0019 | 10 Year Limited Paint and Perforation Warranty - For Sikkens Paint. | 1 |
| 9100-0090 | 25 Year frame rail corrosion warranty. Includes liners (if equipped). | 1 |

| SUPPORT, DELIVERY, INSPECTIONS AND MANUALS | | |
|---|---|---|
| 9300-0000 | Vehicle familiarization aerial (Domestic). | 1 |
| 9300-0009 | Manuals, Operator and Service CD-ROM. | 1 |
| 9300-0016 | Approval Drawings-Standard. | 1 |
| 9300-0316 | Fire Apparatus Safety Guide published by FAMA, latest edition. | 1 |

PRICE - 2017 E-ONE HP78 AERIAL LADDER QUINT - TYPHOON CHASSIS - $687,226

# STATE OF OHIO TERM SCHEDULE

## 4200 SURFACE RD
## COLUMBUS, OH 43228

*Quote No: 57491*

**8/27/2016**

**Quote Rev:31 Drawing Rev:6**

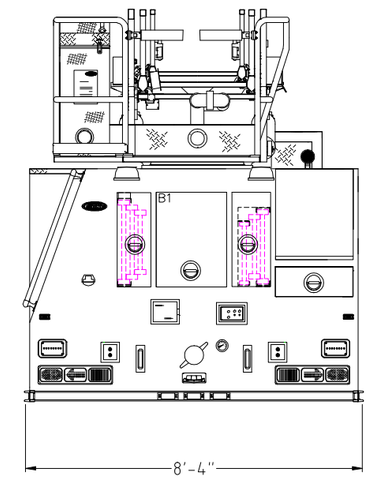


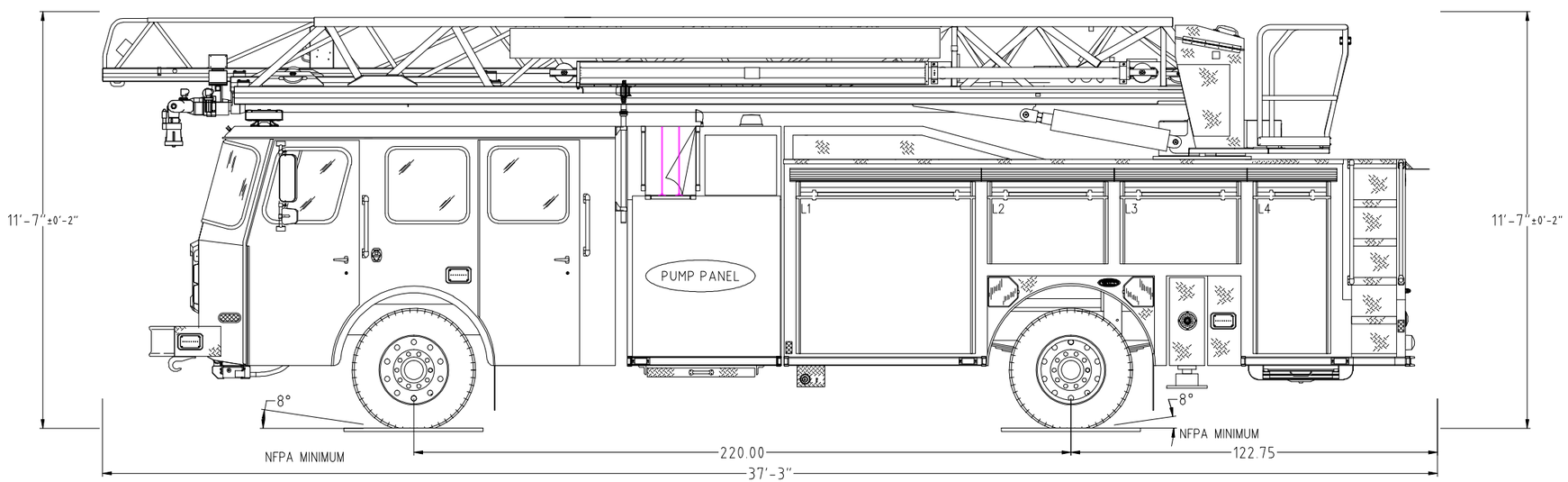


POWERED BY EZDRAW

Notice: This drawing provides a GENERAL REPRESENTATION of the vehicle configuration and should be used for evaluation purposes. The respective dimensions shown,including overall height and length, are estimates and may vary due to manufacturing processes. All other items such as lighting and fixtures, plumbing, compartmentation, and other generally assembled details are shown for REFERENCE ONLY and may not be a direct reflection of the final truck configuration. In ALL situations where this drawing may conflict with the specifications, THE SPECIFICATIONS, AS REFLECTED IN THE APPROVED SHOP ORDER, SHALL PREVAIL. Unless otherwise specified, the proposed apparatus will be manufactured to the latest NFPA recommendations as well as other applicable federally regulated safety regulations. E-One reserves the right to engineer and incorporate design improvements and changes without notice, while adhering to the intent of the specification.

| | HOSE LOADS : |
|---|---|
| 1500 GPM PUMP | |
| 0 TOTAL VOLUME | |
| 0 TOTAL FOAM | |

| | OPENING | | INTERIOR DIMENSIONS | | | | |
|---|---|---|---|---|---|---|---|
| COMPT. | WIDTH | HEIGHT | WIDTH | LOWER HEIGHT | LOWER DEPTH | UPPER HEIGHT | UPPER DEPTH |
| L1 | 58 | 53 | 60 | 61 | 26 | 53 | 24 |
| L2 | 38.5 | 23 | 40.5 | N/A | N/A | 23 | 24 |
| L3 | 38.5 | 23 | 40.5 | N/A | N/A | 23 | 24 |
| L4 | 24 | 53 | 26 | 61 | 26 | 53 | 24 |
| R1 | 58 | 53 | 60 | 61 | 26 | 53 | 23 |
| R2 | 47 | 26 | 47 | 30 | 26 | N/A | N/A |

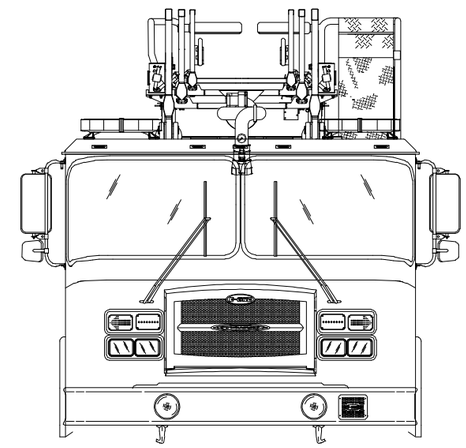

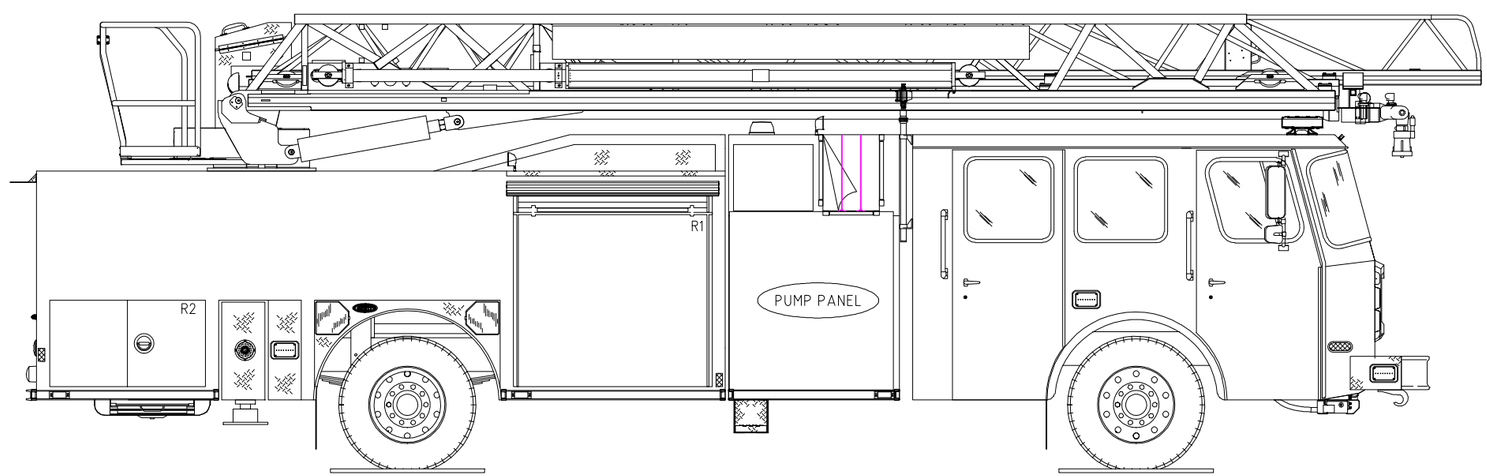


POWERED BY EZDRAW

Fire Apparatus Quotation for:
STATE OF OHIO TERM SCHEDULE

Quotation Number: 77027 Rev: 15

Unit Description: AERM-TYPH-078L
Quote Description: Aerial Rear Mount, Typhoon, HP78 Ladder

| Salescode | Extended Description | Qty |
|---|---|---|
| **TESTING COMPLIANCE STANDARD** | | |
| 1001-0065 | The E-ONE supplied components of the vehicle shall meet the requirements of NFPA 1901, 2016 edition. | 1 |
| 3090-0001 | Hosebed hoseload allowance on the apparatus shall be 1000 lbs. | 1 |
| 3090-0002 | OAH. Unit has no overall height restrictions. | 1 |
| 3090-0004 | OAL. Unit has no overall length restrictions. | 1 |
| 3340-1137-12C | Equipment allowance on the apparatus shall be 2500 lbs. This allowance is in addition to the weight of the hoses and ground ladders listed in the shop order as applicable. | 1 |
| **BUMPERS** | | |
| 1160-0000 | Bumper 10" stainless steel. | 1 |
| 1160-0008 | 3/16" Front Bumper Gravel Shield. | 1 |
| 1160-0013 | 16" Front Bumper Gravel Shield Extension. | 1 |
| **FRAME ASSEMBLY** | | |
| 1250-0081 | Frame assembly with 12 x 3.5 x .375 powder coated galvanized rails. | 1 |
| 1250-0084 | Frame liner 11.125 x 3.125 x .375, galvanized and powder coated. | 1 |
| **AXLE OPTIONS** | | |
| 1025-0012 | Meritor FL-943 front axle 21,000 lb. | 1 |
| 1025-0028 | Koni shock absorbers for front axle - adjustable. | 1 |
| 1025-0097 | Meritor RS-30-185 single rear axle 33,000 lb. capacity. Requires 16.5" x 8.625" cast shoe brakes and 33K suspension. | 1 |
| **SUSPENSIONS** | | |
| 1070-0017 | Reyco rear spring suspension w/aux 33K rating. | 1 |
| **WHEEL OPTIONS** | | |
| 1050-0007 | Front axle wheel trim kit. Includes stainless steel lug nut covers (chrome plated plastic if applicable) and center cap with E-ONE logo. Note: Center cap will have an inspection port IPO a logo if equipped with Stemco oil seals. | 1 |
| 1050-0008 | Rear axle (single) wheel trim kit. Includes stainless steel lug nut covers (chrome plated plastic if applicable) and center cap with E-ONE logo. E-ONE custom chassis w/steel wheels will have chrome plated plastic lug covers. | 1 |
| 1050-0044 | Accuride aluminum wheels for front axle (2). | 1 |
| 1050-0045 | Accuride aluminum wheels for rear axle (4). | 1 |
| **TIRE OPTIONS** | | |
| 1060-0017 | Four Michelin 315 rear tires with XDN2 mud and snow tread. | 1 |
| 1060-0046 | Two Michelin 425 tires model XFE for front axle. | 1 |
| 1060-0117 | RWC AirGuard LED tire pressure monitoring valve stem caps (6) for single rear axle applications. | 1 |
| **BRAKE SYSTEMS** | | |
| 1100-0001 | Meritor EX225H 17" disc brakes for front axle. | 1 |
| 1100-0005 | Brake system air 4X2/4X4. | 1 |
| 1100-0006 | Parking brake release mounted on the driver's side lower dash. | 1 |
| 1100-0036 | 16.5'' x 8.625'' P-Cast S-cam brakes for 27,000 - 33,000 Meritor axle. | 1 |
| **AIR SYSTEM OPTIONS** | | |
| 1110-0000-001 | Inlet for air system. Location: driver door jamb. | 1 |

| | | |
|---|---|---|
| 1110-0002 | Air dryer Bendix AD-9. | 1 |
| 1110-0006 | Air lines nylon. | 1 |
| 1110-0026 | Air horns recessed in bumper (PR). | 1 |
| 1110-0027 | Isolated air tank. Includes pressure protection valve. | 1 |
| 1110-0043 | Auxiliary air tank to be plumbed to the following optional accessories (if equipped): Chassis air horns, brake system air outlet, air reel, light tower, air primer and or customer/dealer supplied pneumatic add-on(s). | 1 |
| ENGINES & TRANSMISSIONS | | |
| 1200-0017 | Push-button transmission shift selector. | 1 |
| 1200-0020 | TransSynd synthetic transmission fluid for EVS3000. | 1 |
| 1200-0096 | Electronic speed limiting set at 60 MPH. | 1 |
| 1200-0313 | Eng/Trans Cummins ISL 450HP/EVS3000 2016 EPA compliant engine. | 1 |
| SECONDARY BRAKING | | |
| 1125-0002 | Jacobs engine compression brake. | 1 |
| 1125-0023 | Transmission to seek second gear when Jacobs engine brake or Telma retarder is engaged. N/A with Trans retarder. | 1 |
| COOLING PACKAGE | | |
| 1800-0013 | Cooling system for use with Cyclone II X, Typhoon X, and Quest chassis. For use with 2010 / 2013 / 2016 EPA engines. Includes coolant recovery system. | 1 |
| FUEL SYSTEMS | | |
| 1350-0003 | Fuel system 50 gallon. | 1 |
| 1350-0011 | Fuel pump electric w/re-prime. | 1 |
| 1350-0012-670 | Fuel shut-off valve. Location: one (1) inlet side of OEM fuel filter. | 1 |
| 1350-0022 | Fuel line hose rubber. | 1 |
| ALTERNATOR | | |
| 1700-0005 | Alternator Leece Neville 320 amp. 320 amp SAE/275 amp NFPA. | 1 |
| BATTERIES | | |
| 1400-0002 | Battery four group 31 1000 CCA. | 1 |
| CHASSIS OPTIONS | | |
| 1680-0005 | Thermatic fan clutch. | 1 |
| 1680-0006 | Drivelines 1710. | 1 |
| 1680-0012 | Tow eyes rear frame painted. | 1 |
| 1680-0042 | Tow hooks front painted in the down position. | 1 |
| 1680-0051 | Aerial hydraulic activation system. | 1 |
| 1680-0250-M58 | Diesel Exhaust Fluid (DEF) 5 gallon tank for 2013 / 2016 EPA engines. Location: left side below rear of cab. | 1 |
| CAB MODEL | | |
| 1520-0012 | Typhoon X long cab with 67.5" CA | 1 |
| CAB ROOF TYPE | | |
| 1615-0010 | Cab roof to be "flat" (non-vista). | 1 |
| CAB BADGE PACKAGE | | |
| 1610-0000 | Cab and body to have applicable E-ONE logos. | 1 |
| GRILLE | | |
| 1620-0004 | ABS chrome plated grille. | 1 |
| CAB DOOR OPTIONS | | |
| 1550-0003 | Rear crew cab doors in the medium position. | 1 |
| 1550-0005 | Driver and officer cab door windows. Include forward vent windows. | 1 |
| 1550-0011 | Rear crew cab door windows. Includes manual roll-down actuation. Not available on Typhoon or CII with paddle style door latching. | 1 |
| 1550-0016 | Cab door panels ABS. | 1 |
| 1550-0025 | All cab doors shall have "L" style exterior latches. | 1 |
| 1550-0027 | Front cab door windows to have manual actuation. | 1 |
| 1550-0038-659 | (4) LED cab step area lighting. Locate each light on each cab door in the inboard position. Lights to be | 1 |

| | | |
|---|---|---|
| | switched with door ajar. | |
| 1550-0044 | All cab door kick plates to be made from diamond plate aluminum. | 1 |
| 1550-0059-000-G6 | Reflective Red/Lemon Yellow printed striping positioned in the "A" formation located on the cab door panels. | 1 |
| 1550-0077 | Interior cab door locks - manual. Will have manual actuation from each respective door. Includes barrel style key lock on each exterior cab door. | 1 |
| 1550-0083 | All cab exterior access doors to have CH751 keyed locks. | 1 |

| CAB STEP OPTIONS | | |
|---|---|---|
| 1640-0045-158 | Step below cab door. Open back style with angled corners. Located driver's front door. Steps under front cab doors shall not interfere with approach angle. | 1 |
| 1640-0045-159 | Step below cab door. Open back style with angled corners. Located officer's front door. Steps under front cab doors shall not interfere with approach angle. | 1 |
| 1640-0045-160 | Step below cab door. Open back style with angled corners. Located driver's rear door. Steps under front cab doors shall not interfere with approach angle. | 1 |
| 1640-0045-161 | Step below cab door. Open back style with angled corners. Located officer's rear door. Steps under front cab doors shall not interfere with approach angle. | 1 |

| MIRRORS | | |
|---|---|---|
| 1670-0003 | Velvac 2010 mirrors. Door mounted west coast style with remote control and heat. | 1 |

| MISC EXTERIOR CAB OPTIONS | | |
|---|---|---|
| 1550-0020 | Windows cab side fixed driver's side. | 1 |
| 1550-0033 | Windows cab side fixed officer's side. | 1 |
| 1675-0022 | Pair of 18" handrails located just behind driver and officer front door one each side. | 1 |
| 1675-0023 | Pair of 18" handrails located just behind driver and officer rear door (ALS doors if equipped) one each side. | 1 |
| 1675-0030 | Mud flaps, front, black with E-ONE logo. | 1 |
| 1675-0046 | Rear cab wall to be smooth 3/16" aluminum plate. Cab wall to be finish painted to match the cab paint scheme. | 1 |
| 1675-0201 | Large radius cab wheel well. Includes bolt-on adjustable wheel well trim. | 1 |
| 1675-0202 | Mounting plate for battery charger receptacle, indicator and air inlet (if applicable). Plate to be removable brushed stainless steel. | 1 |

| HVAC | | |
|---|---|---|
| 1515-0017 | Air conditioning for the Typhoon X, CII X and Quest with Cummins ISC/ISL engine and radiator mounted condenser. | 1 |
| 1515-0053 | Controls for heating and air conditioning shall be located in the center dash area. (Lower area on Typhoon and CII with severe duty dash) | 1 |

| SEATS | | |
|---|---|---|
| 1510-0003 | Seats, Inc. brand 911 cab seats. | 1 |
| 1510-0008 | Seat color gray. | 1 |
| 1510-0035-147 | Universal air pack bottle bracket (EA). Location: officer's seat. | 1 |
| 1510-0035-148 | Universal air pack bottle bracket (EA). Location: rear facing driver's side. | 1 |
| 1510-0035-151 | Universal air pack bottle bracket (EA). Location: inboard driver's side rear wall. | 1 |
| 1510-0035-152 | Universal air pack bottle bracket (EA). Location: inboard officer's side rear wall. | 1 |
| 1510-0035-215 | Universal air pack bottle bracket (EA). Location: rear facing officer's side. | 1 |
| 1510-0038 | Driver seat 911 air ride. | 1 |
| 1510-0042 | Officer seat to be 911 fixed SCBA. | 1 |
| 1510-0050 | Rear facing 911 seat with SCBA driver's side. | 1 |
| 1510-0053 | Rear facing 911 seat with SCBA officer's side. | 1 |
| 1510-0062 | Two man bench centered on rear wall with 911 SCBA backs. Includes angled corners. | 1 |
| 1510-0234 | Seat cover material Turnout Tuff. | 1 |
| 1685-0033 | Seating capacity tag of six occupants. | 1 |

| MISC INTERIOR CAB OPTIONS | | |
|---|---|---|
| 1685-0000 | Cab interior gray. Does not include engine cover or seat color. | 1 |
| 1685-0005 | Lexan sun visors, driver and officer's side overhead. | 1 |
| 1685-0168 | ABS Dash package. Includes center and officer side dash, lower kick panels and "A" post covers. | 1 |

| | | |
|---|---|---|
| 1685-0187 | Severe duty engine cover, molded polyurethane. | 1 |
| **CAB ELECTRICAL OPTIONS** | | |
| 1750-0013-172 | Turn signal Whelen 600 LED amber arrow pair located upper headlight bezel. | 1 |
| 1750-0024-179-02 | Auto-Eject receptacle inlet 20 amp located outside driver's door next to handrail with a Red cover. | 1 |
| 1750-0029 | Switch horn button two position DOT/air horn. | 1 |
| 1750-0046-195 | Cab Headlights. Position: lower. | 1 |
| 1750-0072-593 | 12 VDC (or 24VDC) electrical outlet in the cab wired battery hot. Location: officer side dash. | 2 |
| 1750-0075 | English dominant main cab gauge cluster. | 1 |
| 1750-0158 | Dome Lts Red/White LED. Package includes two lights mounted in the front and two mounted in the rear of the cab. White light wired through door and light assembly switch. Red light through light assembly switch. | 1 |
| 1750-0198-A31 | Battery charger to be located behind driver's seat. | 1 |
| 1750-0343 | Battery charger E-ONE LPC 20. 120 volt inlet, 20 amp output. | 1 |
| 1750-0435 | Halogen cab headlights. TyphoonX, CIIX and QST2 only. | 1 |
| 1750-0449 | Momentary DPF regeneration override switch. | 1 |
| **BODY MODEL** | | |
| 3080-0064 | Body aerial HP75 / HP78 SideStacker Quest / CII / Typhoon with pump. Single axle. Includes extended R1 compt and pocket style drop down step at left rear staircase. The rear access doors to match the rear body finish. | 1 |
| **BODY COMPT REAR** | | |
| 3110-0360 | Rear of body to have un-painted smooth plate overlay style body panels to facilitate rear body striping. | 1 |
| **AERIAL BODY OPTIONS** | | |
| 3310-0097 | Hose bed depth 26" HP75 / HP78 SideStacker with tall R1. Will hold up to 800' of 5" LDH and up to 300-400' of 2.5 or 3" DJ. Capacity will be reduced with optional diamond plate covers. | 1 |
| 3310-0128 | Pike pole/Ladder storage. Available on HP75/78 SideStacker with tall R1 & HM100/110 SideStacker only. The access door to match the rear body finish. | 1 |
| 3310-0161 | Jack leg opening covers diamond plate (2) sets. Includes diamond plate outrigger covers and fixed diamond plate filler panels. | 1 |
| 3310-0314 | Auxiliary jack pad 24X24 (2) with 20 degree formed handle. Includes mounting brackets. | 1 |
| **DOORS** | | |
| 3300-0017-004 | Door roll up short (up to 45") with satin finish ROM. Location(s): L2. | 1 |
| 3300-0017-005 | Door roll up short (up to 45") with satin finish ROM. Location(s): L3. | 1 |
| 3300-0019-003 | Door roll up tall (greater than 45") with satin finish ROM. Location(s): L1. | 1 |
| 3300-0019-006 | Door roll up tall (greater than 45") with satin finish ROM. Location(s): L4. | 1 |
| 3300-0019-015 | Door roll up tall (greater than 45") with satin finish ROM. Location(s): R1. | 1 |
| 3300-0019-864 | Door roll up tall (greater than 45") with satin finish ROM. Location(s): driver side pump panel. | 1 |
| 3300-0019-O33 | Door roll up tall (greater than 45") with satin finish ROM. Location(s): right side compartment opposite pump panel. | 1 |
| 3300-0164-016 | Door double vertical hinged w/rotary latches - painted . Location(s): R2 | 1 |
| **SHELVES** | | |
| 3370-0052-069 | Adjustable shelf (J-Style) for non-transverse compartments 16" or greater in depth. Location: L1 lower. | 1 |
| 3370-0052-073 | Adjustable shelf (J-Style) for non-transverse compartments 16" or greater in depth. Location: R1 lower. | 1 |
| 3370-0052-079 | Adjustable shelf (J-Style) for non-transverse compartments 16" or greater in depth. Location: L4 lower. | 1 |
| 3370-0052-U73 | Adjustable shelf (J-Style) for non-transverse compartments 16" or greater in depth. Location: lower section in RP compartment. | 1 |
| 3370-0054-069 | Tracks for adjustable shelf and/or adjustable tray in compartments 16" or greater in depth. Location: L1 lower. | 1 |
| 3370-0054-073 | Tracks for adjustable shelf and/or adjustable tray in compartments 16" or greater in depth. Location: | 1 |

| | | |
|---|---|---|
| | R1 lower. | |
| 3370-0054-079 | Tracks for adjustable shelf and/or adjustable tray in compartments 16" or greater in depth. Location: L4 lower. | 1 |
| 3370-0054-U73 | Tracks for adjustable shelf and/or adjustable tray in compartments 16" or greater in depth. Location: lower section in RP compartment. | 1 |
| COVERS | | |
| 3305-0007-000-02 | Vinyl Red hose bed cover with attached rear flap(s). | 1 |
| 3305-0016-000-02 | Vinyl Red speedlay side covers. | 1 |
| PUMP MODULE | | |
| 3130-0421 | eMAX Pump module HP75/78. Includes enclosed pump panel, compt on officer side (opposite pump panel), lower and upper storage areas, center front pump access doors, removable center floor in upper area, storage pan and boom support diamond plate filler panels. Lower storage area to hold (1) tray for 200' of 1.75" DJ preconnected hose and (1) tray for 200' of 2.5" DJ preconnected hose. Upper storage area to hold (1) tray for 200' of 1.75" DJ preconnected hose offset to rear and storage area for (2) backboards vertically stored offset forward w/sleeve each side of center pump access. | 1 |
| PUMP PANELS | | |
| 3134-0079 | The side pump intake / discharge panels to be stainless steel. eMAX only. | 1 |
| 3134-0080 | Pump operator control panel in driver side forward body compartment to be stainless steel. eMAX only. | 1 |
| MISC PUMP PANEL OPTIONS | | |
| 4460-0003 | Pump panel tags color coded per NFPA compliance. | 1 |
| 4460-0058 | Push-pull handles on the pump operator's panel to be oriented vertical. eMAX only. | 1 |
| PUMP MODULE OPTIONS | | |
| 3136-0205 | Removable Aluminum Speedlay Tray(s) with slotted floor to prevent the accumulation of water and allow for ventilation of wet hose. Includes vertical slotted hand hold cutouts on each end to facilitate easy removal of the hose tray. No lip, No grab rod. | 3 |
| WATER TANK | | |
| 4010-0198 | 500 gallon "T" water tank. UPF Poly III blue fill tower. | 1 |
| TANK PLUMBING | | |
| 4450-0010 | 2" tank fill Akron manual valve. | 1 |
| 4450-0023 | 3" Tank to Pump Akron Air Actuated Valve | 1 |
| LADDER STORAGE / RACKS | | |
| 3365-0167-C85 | Dual ladder tunnel for HP75 / HP78 SideStacker with tall R1 compartment. Ladder rack to hold: PEL3-35, PEL-28 and PRL-16. | 1 |
| HANDRAILS / STEPS | | |
| 3330-0002-050 | Slide-out platform, rollerless. Includes chrome grab handle centered on the front face of the platform (includes hand rail as applicable). Located below driver side pump panel. | 1 |
| 3330-0158 | Step below side intake / discharge panel (PR). Gator grip diamond plate. Each location requires a minimum of (1) handrail / handhold per NFPA. eMAX only. | 1 |
| MISC BODY OPTIONS | | |
| 3340-0093 | Mud flaps, rear, black with E-ONE logo. | 1 |
| 3340-0270 | The painted aerial body side panels shall be smooth / flush. Applies to SideStacker HB side, panels next to water tank on MM, and upper body sides on RLP. | 1 |
| 3340-0282-O32 | Cab tilt switch and manual jack to be located: right side compartment opposite pump panel low on forward wall. | 1 |
| 3340-0486 | Diamond plate single axle wheel well. Includes bolt-on composite wheel well liners and bolt-on polished alum fenderettes. | 1 |

| | | |
|---|---|---|
| **SCBA BOTTLE STORAGE** | | |
| 3320-0061 | SCBA Bottle Storage. (4) Cast Product SCBA bottle storage doors. (2) each side in rear wheel well area. | 1 |
| 3320-0100 | Strap(s), loop style to retain SCBA bottle(s). Locate one per bottle in each exterior storage compartment. | 4 |
| **PUMPS** | | |
| 4005-0031 | Rating 1500 GPM. | 1 |
| 4005-0204 | E-ONE 1250-1500 GPM pump, single stage. Requires primer option. | 1 |
| **PUMP CERTIFICATION** | | |
| 4475-0000 | Pump certification 750-2250 GPM | 1 |
| **PUMP OPTIONS** | | |
| 4015-0053-198 | Steamers to be Flush + 1". Location: driver's side. | 1 |
| 4015-0053-199 | Steamers to be Flush + 1". Location: officer's side. | 1 |
| 4015-0073 | Manual operated master pump drain. The master drain shall be clearly marked and placed in accessible location below running board on driver side or L1 compartment. | 1 |
| 4015-0133 | Anode for Darley pump - (1) intake side. | 1 |
| 4015-0210 | Pump cooler with Innovative Control 1/4 turn valve with "T" handle and label. | 1 |
| 4015-0240 | Darley electric primer (oil-less). | 1 |
| **INTAKES** | | |
| 4440-0005 | 2.5" Left Intake Akron Manual Valve. | 1 |
| **INTAKE OPTIONS** | | |
| 4445-0048 | Intake pressure relief valve, Task Force Tips. | 1 |
| **DISCHARGES AND PRECONNECTS** | | |
| 4415-0014-581 | 2.5" Left Pump Panel Discharge Akron Manual Valve. Location: left side discharge 1. | 1 |
| 4415-0014-582 | 2.5" Left Pump Panel Discharge Akron Manual Valve. Location: left side discharge 2. | 1 |
| 4415-0016-584 | 2.5" Right Pump Panel Discharge Akron Manual Valve. Location: right side discharge 2. | 1 |
| 4415-0054-583 | 4" Right Pump Panel Discharge with 3" Akron Manual Valve (Waterous pumps noted location to be forward lower port). Location: right side discharge 1. | 1 |
| 4415-0858 | Triple speedlay with (1) 1.5" and (1) 2.5" in lower storage area and (1) 1.5" in upper storage area. All with Akron manual valves. | 1 |
| 4415-0957 | Speedlay plumbing in lower opening to have 1.5" forward and 2.5" rearward. | 1 |
| 4415-0994 | 4" waterway discharge with 4" Akron electric valve with 9323 controller. | 1 |
| **DISCHARGE OPTIONS** | | |
| 4417-0175 | Innovative Controls push/pull valve controls with locking T handles. | 1 |
| 4417-0176 | Innovative Controls 3/4" bleeder/drain valve include lift lever with ergonomic grip. | 8 |
| 4417-0185 | Innovative Controls discharge and intake bezels with integral color code and verbiage for side mount pump panel. | 1 |
| **PRESSURE GOVERNORS** | | |
| 4465-0011 | Class 1 TPG pressure governor. Includes, water, oil, volt and tachometer. | 1 |
| **GAUGES** | | |
| 4435-0083 | Innovative Controls 10 LED SL series water tank level gauge. On pump panel. | 1 |
| 4435-0246 | 2.5" Innovative Controls stainless steel case pressure gauge (0-400) with color code bezel. | 8 |
| 4435-0247 | 4" Innovative Controls stainless steel case master pressure gauges with bezel. Intake 30-0-400, and discharge 0-400. | 1 |
| **ELECTRICAL SYSTEMS** | | |
| 5010-0013-Y83 | Vehicle data recorder - 2009 / 2016 NFPA compliant. Includes occupant detection with display. Display location: inboard on driver's side overhead console. | 1 |

| | | |
|---|---|---|
| 5010-0039 | V-MUX Electrical system for aerials. | 1 |
| 5010-0059-339 | VFD Text display for V-MUX electrical system. Location: center of dash. | 1 |
| **LIGHT BARS** | | |
| 5300-0506-000-4V | Light bar LED color: Red/White with clear lenses | 1 |
| 5300-0515 | Whelen MKEZ7 1.5" standard mount for mini front light bars (4). | 1 |
| 5300-0524-035 | Whelen F4 Mini-Freedom LED light bars (PR) 21.5" with 5 LEDs' in each bar. Location: front cab corners at 20 degree angle. | 1 |
| **WARNING LIGHT PACKAGES** | | |
| 5550-0054-537 | Whelen 600 series Super LED lower level warning light package. Includes (10) red LED light heads w/chrome flanges. Locate side facing lights: at forward most position, on side of cab down low just ahead of rear door, and on rear fixed outrigger cover. | 1 |
| **WARNING LIGHTS** | | |
| 5600-0078-268-06 | Whelen Super LED beacon (PR) model L31H with Red domes. Location each side of pump module offset to the rear. | 1 |
| 5600-0078-479-06 | Whelen Super LED beacon (PR) model L31H with Red domes. Location rear upper body on aerial style brackets. | 1 |
| 5600-0105-170 | Hazard (door ajar) light 2" LED. Location: center overhead. | 1 |
| **SIRENS** | | |
| 5500-0015 | Whelen model 295SLSA1 siren with microphone (replaced 295HFSA1). | 1 |
| 5500-0024-170 | The electronic siren control is to be located on the center overhead. | 1 |
| **SPEAKERS** | | |
| 5510-0029-209 | Speaker, Federal Signal Dynamax ES100 with "E-ONE" grille through bumper. Location: driver side front bumper. | 1 |
| **DOT LIGHTING** | | |
| 5150-0006 | Whelen 600 series LED horizontal mount tail lights. Includes LED stop/tail, arrow turn and halogen back-up lights with horizontal Cast 3 housing and weatherproof connectors. | 1 |
| 5150-0017 | License plate light LED with chrome housing located at the rear of the body. | 1 |
| 5150-0026 | Marker light LED body/cab package. E-ONE custom cab with aerial ladder, Mid-Mount platform or Bronto bodies only. | 1 |
| 5150-0032 | Bracket license plate at rear of body. | 1 |
| **LIGHTS - COMPARTMENT, STEP & GROUND** | | |
| 5380-0077 | Compartment light package Amdor Luma-Bar LED for medium bodies. Includes one light per compartment (two if transverse). | 1 |
| 5380-0182 | Ground light package EON LED - large. | 1 |
| 5380-0285 | Step light package body TecNiq T440 4" LED - small. | 1 |
| **LIGHTS - DECK AND SCENE** | | |
| 5390-0007 | Deck/scene light circuit wiring through chassis reverse. Requires rear deck or scene light. | 1 |
| 5390-0076 | Hose bed light Truck-Lite LED model 81380. Locate at front of hose bed. Switched with work light switch in cab. | 1 |
| 5390-0152-445 | Whelen 600 series gradient Super LED surface mounted scene lights (PR) with weatherproof connectors. Switch in cab (driver and officer side lights switched separately). Locate up high on rear access door. | 1 |
| **LIGHTS - NON-WARNING** | | |
| 5400-0003 | Engine compartment light (EA). | 1 |
| 5400-0010 | Incandescent pump compartment light (EA). | 1 |
| 5400-0054 | Spotlight Specialty 2150 hand held located on officer's side of cab dash w/12V receptacle. | 1 |
| 5400-0137 | Pump panel LED light package for side mount eMAX. Includes (6) TecNiq EON lights with S/S housings, located (3) each side above lower side intake/discharge panels. Includes S/S light shields. SM eMAX only. | 1 |
| **CONTROLS / SWITCHES** | | |

| | | |
|---|---|---|
| 5100-0000-199 | Foot switch to control air horns located officer's side. | 1 |
| 5100-0007-198 | Foot switch to control electronic siren located driver's side. | 1 |

| CAMERAS / INTERCOM | | |
|---|---|---|
| 5350-0156 | FRC ACT 2-way aerial intercom. | 1 |

| MISC ELECTRICAL | | |
|---|---|---|
| 1750-0082-762 | 12V power distribution module. Includes (6) battery hot and (6) switched hot circuits. 100 amps max (IATS). Location: behind officer's seat. | 1 |
| 5110-0017 | Back-up alarm 97 dB. | 1 |

| LIGHTS - QUARTZ | | |
|---|---|---|
| 5450-0144-063 | Fire Research, FRC Evolution 12V LED scene light model FCA530-V15-SW-H with external push-up pole. Includes switch in cab accessible to driver. Location: officer side back of cab. | 1 |
| 5450-0144-064 | Fire Research, FRC Evolution 12V LED scene light model FCA530-V15-SW-H with external push-up pole. Includes switch in cab accessible to driver. Location: driver side back of cab. | 1 |

| AERIAL MODEL | | |
|---|---|---|
| 6100-0028 | Ladder HP78 750 lb tip load with waterway. Includes left side console with cover, split steps at tip and jack leg flood lights. | 1 |

| AERIAL HYDRAULIC SYSTEM OPTIONS | | |
|---|---|---|
| 6150-0003-216 | Gauge aerial hydraulic oil level. Electronic display to be located on pump operator's panel. | 1 |

| AERIAL CONTROLS | | |
|---|---|---|
| 6850-0026 | Direct hydraulic aerial control system. | 1 |

| MONITORS | | |
|---|---|---|
| 6300-0002 | Monitor Akron electric 1000 GPM for ladder. Includes tip and base controls. | 1 |
| 6300-0017 | Monitor painted silver from OEM. | 1 |

| AERIAL WARNING LIGHTS | | |
|---|---|---|
| 6550-0001 | Outrigger warning lights (PR) LED. Truck-Lite model 91R. | 1 |

| AERIAL LIGHTING | | |
|---|---|---|
| 6560-0104-232 | Light Whelen Pioneer Plus 12V model PFP1P1 with PBAPEDD pedestal mount. Switched at light head and base console. Location(s): right side tip. | 1 |
| 6560-0127 | FireTech model FT-WL3500-FT-W LED flood/spot light. Includes hardwired switch on turntable console. Location: left and right side of base section. | 1 |

| WATERWAY OPTIONS | | |
|---|---|---|
| 6350-0005 | Rear 4" NST waterway inlet for rear mounted aerials. Includes chrome cap. | 1 |
| 6350-0010 | Flowminder with single readout and totalizer for the aerial waterway to be located at the aerial control station. | 1 |
| 6350-0067 | 2.5" Innovative Controls stainless steel case pressure gauge (0-400) with color code bezel. Locate next to waterway inlet. | 1 |

| AERIAL LADDER BRACKETS | | |
|---|---|---|
| 6600-0002-250 | Roof ladder bracket J style mount. Locate outside base section for a PRL-16 on left side of base section. Available on HP75/78, HP100, and HP95. | 1 |

| SIGN PLATES | | |
|---|---|---|
| 6750-0004-000-39 | Aerial sign plates 12 x 144 (PR). Available on HP78, HP100 and HP100 platform only. Does not include lettering. Color: Job Color. | 1 |

| AERIAL TESTING | | |
|---|---|---|
| 6900-0000 | Aerial flow test - 3rd party. | 1 |
| 6900-0007 | Aerial 2016 NFPA Certification. | 1 |

| ELBOWS |
|---|

| | | |
|---|---|---|
| 7400-0004 | Elbow 30 degree chrome swivel w/2.5"FNST x 2.5"MNST. | 3 |
| ADAPTERS | | |
| 7200-0026 | Swivel Connector 4" FNST x 5" Storz 30 Deg Elbow with Tethered Cap. | 1 |
| HAND TOOLS | | |
| 7600-0005 | Pike Pole Fiberglass 6'. | 2 |
| 7600-0006 | Pike Pole Fiberglass 8'. | 2 |
| 7600-0008 | Pike Pole Fiberglass 12'. | 2 |
| GROUND LADDERS | | |
| 7800-0010 | Alco-Lite PRL-16' roof ladder. | 2 |
| 7800-0021 | Alco-Lite PEL-28' extension ladder. | 1 |
| 7800-0023 | Alco-Lite PEL3-35' 3-section extension ladder. | 1 |
| 7800-0032 | Alco-Lite FL-10, 10' folding ladder w/safety shoes. | 1 |
| MISC LOOSE EQUIPMENT | | |
| 7600-0016 | Wheel chocks 44" NFPA compliant, pair (PR) of Zico SAC-44. Up to 44" diameter tires. Includes mounting brackets. | 4 |
| 7900-0014 | DOT Required Drive Away Kit - Kit includes three (3) triangular warning reflectors with carrying case. This kit is for the end user and is to remain with the truck. | 1 |
| EXTERIOR PAINT | | |
| 8100-0071 | Undercoating E-ONE. | 1 |
| 8100-0084 | All applicable pump/pre-connect application modules are to have a job color finish. Includes upper and lower pump modules, crosswalk module and/or speedlay/pre-connect module (as applicable). Rear mounted body/pump module to be painted job color. | 1 |
| 8100-0116 | Rear body surface to have a sanded finish (not painted job color). Includes hinged doors that do not have discrete sales codes and removable panels. | 1 |
| EXTERIOR PAINT | | |
| 8100-0176-000-17 | Paint E-ONE chassis cab - Sikkens paint. Color: FLNA3225E-1 Red. | 1 |
| 8100-0183-000-17 | Paint Body - Large - For Aerials, T/A Tankers/Wetsides, Rear Mounts and Rescues. Sikkens paint. Color: FLNA3225E-1 Red. | 1 |
| 8100-0354 | Paint lift cylinders, extension cylinders and upper turntable steelwork primary job color (does not apply to TT deck). | 1 |
| INTERIOR PAINT | | |
| 8150-0011 | The interior of the cab to be painted Zolatone gray. | 1 |
| STRIPING | | |
| 8200-0015 | White reflective tape on (2) outriggers. | 1 |
| 8300-0002-334-12 | NFPA Scotchlite Stripe - 4" wide and straight on front/sides of cab and sides/rear of body. Color: White. Location: bottom of stripe flush with top of bumper and straight back. | 1 |
| 8300-0042 | White rubrail scotchlite insert. | 1 |
| 8300-0084-000-72 | Chevron "A" style 6" printed sheet Scotchlite striping full width on rear of body. Includes rear facing extrusions, panels and doors. Colors to be Yellow/Red. | 1 |
| 8300-0313 | Yellow line to indicate designated standing / walking areas above 48" high in compliance with 2016 NFPA 1901. Line to be 1" wide. Steps, ladders and areas with a railing or structure at least 12" high are excluded from requiring the line. | 1 |
| GRAPHICS | | |
| 8400-0022 | Logo E-ONE (PR) on aerial lift cylinder. Logo to be black and white reflective material approx 14" long located midway along outward surface of cylinder. | 1 |
| WARRANTY / STANDARD & EXTENDED | | |
| 9100-0000 | Standard 1 Year Warranty. | 1 |
| 9100-0003 | Lifetime Frame Warranty. | 1 |
| 9100-0004 | 10 Year/100,000 Mile Structural Warranty for Alum Cab / Body - Statement of Warranty. | 1 |
| 9100-0005 | 10 Year Stainless Steel Plumbing Warranty - Statement of Warranty. | 1 |
| 9100-0007 | 20 Year Aerial Device Structural Warranty - Integrity Limited Warranty. | 1 |

| | | |
|---|---|---|
| 9100-0019 | 10 Year Limited Paint and Perforation Warranty - For Sikkens Paint. | 1 |
| 9100-0090 | 25 Year frame rail corrosion warranty. Includes liners (if equipped). | 1 |

| SUPPORT, DELIVERY, INSPECTIONS AND MANUALS | | |
|---|---|---|
| 9300-0000 | Vehicle familiarization aerial (Domestic). | 1 |
| 9300-0009 | Manuals, Operator and Service CD-ROM. | 1 |
| 9300-0016 | Approval Drawings-Standard. | 1 |
| 9300-0316 | Fire Apparatus Safety Guide published by FAMA, latest edition. | 1 |

PRICE - 2017 E-ONE HP78 EMAX AERIAL LADDER QUINT - TYPHOON CHASSIS - $695,915

# STATE OF OHIO TERM SCHEDULE

## 4200 SURFACE RD
## COLUMBUS, OH 43228

*Quote No: 77027*

**8/27/2016**

**Quote Rev:15 Drawing Rev:2**

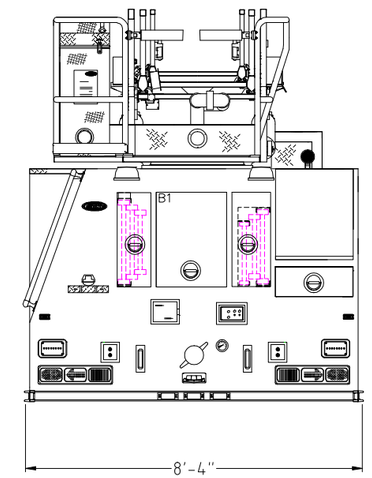


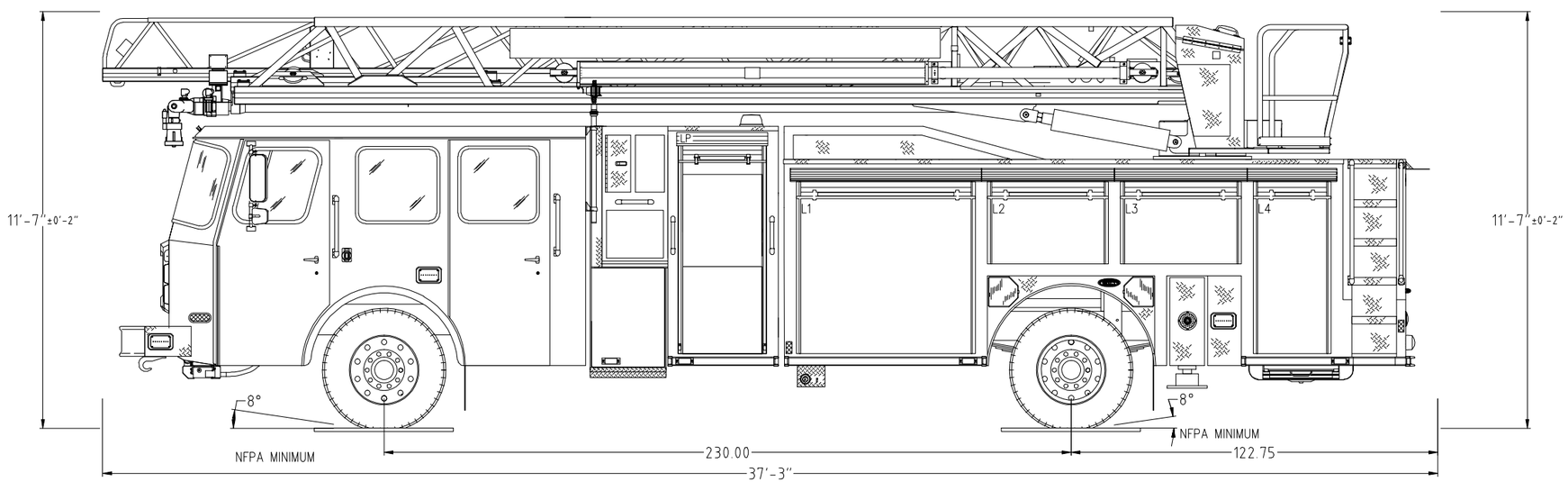


POWERED BY EZDRAW

Notice: This drawing provides a GENERAL REPRESENTATION of the vehicle configuration and should be used for evaluation purposes. The respective dimensions shown,including overall height and length, are estimates and may vary due to manufacturing processes. All other items such as lighting and fixtures, plumbing, compartmentation, and other generally assembled details are shown for REFERENCE ONLY and may not be a direct reflection of the final truck configuration. In ALL situations where this drawing may conflict with the specifications, THE SPECIFICATIONS, AS REFLECTED IN THE APPROVED SHOP ORDER, SHALL PREVAIL. Unless otherwise specified, the proposed apparatus will be manufactured to the latest NFPA recommendations as well as other applicable federally regulated safety regulations. E-One reserves the right to engineer and incorporate design improvements and changes without notice, while adhering to the intent of the specification.

| | HOSE LOADS : |
|---|---|
| 1500 GPM PUMP | |
| 0 TOTAL VOLUME | |
| 0 TOTAL FOAM | |

| | OPENING | | INTERIOR DIMENSIONS | | | | |
|---|---|---|---|---|---|---|---|
| COMPT. | WIDTH | HEIGHT | WIDTH | LOWER HEIGHT | LOWER DEPTH | UPPER HEIGHT | UPPER DEPTH |
| L1 | 58 | 53 | 60 | 61 | 26 | 53 | 24 |
| L2 | 38.5 | 23 | 40.5 | N/A | N/A | 23 | 24 |
| L3 | 38.5 | 23 | 40.5 | N/A | N/A | 23 | 24 |
| L4 | 24 | 53 | 26 | 61 | 26 | 53 | 24 |
| R1 | 58 | 53 | 60 | 61 | 26 | 53 | 23 |
| R2 | 47 | 26 | 47 | 30 | 26 | N/A | N/A |

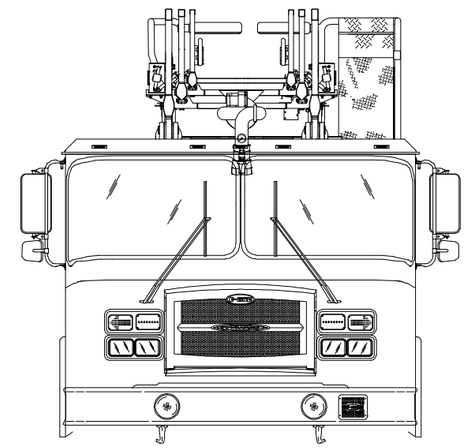

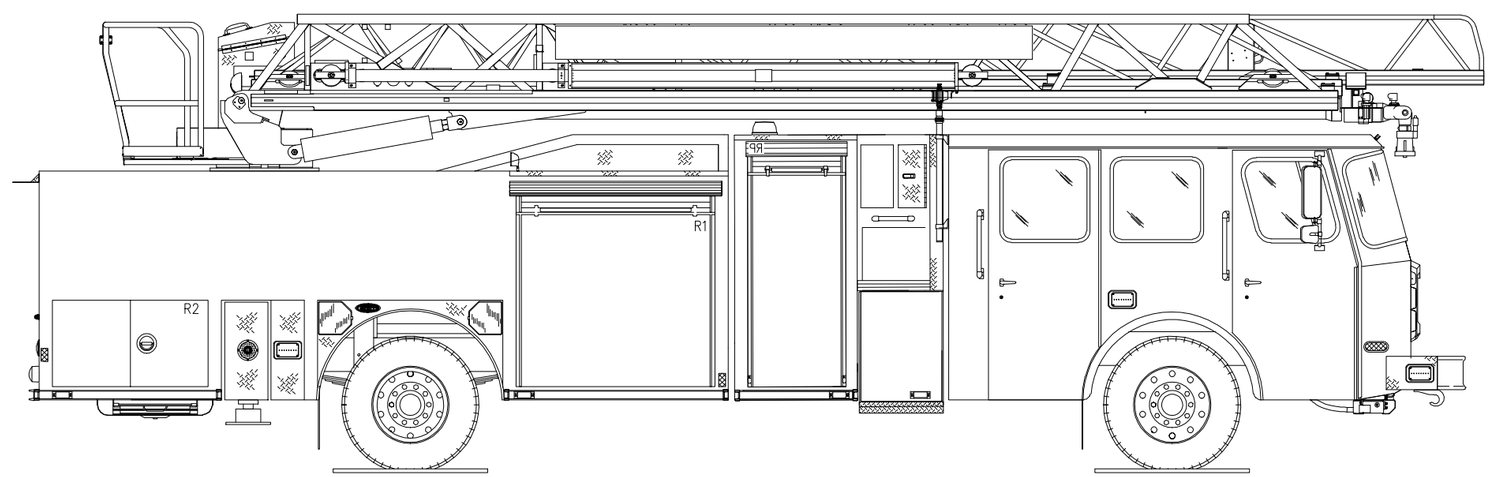


POWERED BY EZDRAW

Fire Apparatus Quotation for:
STATE OF OHIO TERM SCHEDULE

Quotation Number: 71280 Rev: 17

Unit Description: AERM-CYC2-M100
Quote Description: Aerial Rear Mount, Cyclone II, Metro 100

| Salescode | Extended Description | Qty |
|---|---|---|
| **TESTING COMPLIANCE STANDARD** | | |
| 1001-0065 | The E-ONE supplied components of the vehicle shall meet the requirements of NFPA 1901, 2016 edition. | 1 |
| 3090-0002 | OAH. Unit has no overall height restrictions. | 1 |
| 3090-0004 | OAL. Unit has no overall length restrictions. | 1 |
| 3340-1137-12C | Equipment allowance on the apparatus shall be 2500 lbs. This allowance is in addition to the weight of the hoses and ground ladders listed in the shop order as applicable. | 1 |
| **BUMPERS** | | |
| 1160-0000 | Bumper 10" stainless steel. | 1 |
| 1160-0008 | 3/16" Front Bumper Gravel Shield. | 1 |
| 1160-0014 | 20" Front Bumper Gravel Shield Extension. | 1 |
| **FRAME ASSEMBLY** | | |
| 1250-0063 | Frame - Torque box for single axle RM aerial. | 1 |
| **AXLE OPTIONS** | | |
| 1025-0006 | Meritor FL941 front axle 20,000 lbs. | 1 |
| 1025-0028 | Koni shock absorbers for front axle - adjustable. | 1 |
| 1025-0097 | Meritor RS-30-185 single rear axle 33,000 lb. capacity. Requires 16.5" x 8.625" cast shoe brakes and 33K suspension. | 1 |
| **SUSPENSIONS** | | |
| 1070-0017 | Reyco rear spring suspension w/aux 33K rating. | 1 |
| **WHEEL OPTIONS** | | |
| 1050-0007 | Front axle wheel trim kit. Includes stainless steel lug nut covers (chrome plated plastic if applicable) and center cap with E-ONE logo. Note: Center cap will have an inspection port IPO a logo if equipped with Stemco oil seals. | 1 |
| 1050-0008 | Rear axle (single) wheel trim kit. Includes stainless steel lug nut covers (chrome plated plastic if applicable) and center cap with E-ONE logo. E-ONE custom chassis w/steel wheels will have chrome plated plastic lug covers. | 1 |
| 1050-0044 | Accuride aluminum wheels for front axle (2). | 1 |
| 1050-0045 | Accuride aluminum wheels for rear axle (4). | 1 |
| **TIRE OPTIONS** | | |
| 1060-0017 | Four Michelin 315 rear tires with XDN2 mud and snow tread. | 1 |
| 1060-0046 | Two Michelin 425 tires model XFE for front axle. | 1 |
| 1060-0117 | RWC AirGuard LED tire pressure monitoring valve stem caps (6) for single rear axle applications. | 1 |
| **BRAKE SYSTEMS** | | |
| 1100-0001 | Meritor EX225H 17" disc brakes for front axle. | 1 |
| 1100-0005 | Brake system air 4X2/4X4. | 1 |
| 1100-0006 | Parking brake release mounted on the driver's side lower dash. | 1 |
| 1100-0036 | 16.5'' x 8.625'' P-Cast S-cam brakes for 27,000 - 33,000 Meritor axle. | 1 |
| **AIR SYSTEM OPTIONS** | | |
| 1110-0000-001 | Inlet for air system. Location: driver door jamb. | 1 |
| 1110-0002 | Air dryer Bendix AD-9. | 1 |

| | | |
|---|---|---|
| 1110-0006 | Air lines nylon. | 1 |
| 1110-0026 | Air horns recessed in bumper (PR). | 1 |
| **ENGINES & TRANSMISSIONS** | | |
| 1200-0017 | Push-button transmission shift selector. | 1 |
| 1200-0020 | TransSynd synthetic transmission fluid for EVS3000. | 1 |
| 1200-0096 | Electronic speed limiting set at 60 MPH. | 1 |
| 1200-0313 | Eng/Trans Cummins ISL 450HP/EVS3000 2016 EPA compliant engine. | 1 |
| **SECONDARY BRAKING** | | |
| 1125-0002 | Jacobs engine compression brake. | 1 |
| 1125-0023 | Transmission to seek second gear when Jacobs engine brake or Telma retarder is engaged. N/A with Trans retarder. | 1 |
| **COOLING PACKAGE** | | |
| 1800-0013 | Cooling system for use with Cyclone II X, Typhoon X, and Quest chassis. For use with 2010 / 2013 / 2016 EPA engines. Includes coolant recovery system. | 1 |
| **FUEL SYSTEMS** | | |
| 1350-0004 | Fuel system 50 gallon saddle tanks. | 1 |
| 1350-0011 | Fuel pump electric w/re-prime. | 1 |
| 1350-0012-670 | Fuel shut-off valve. Location: one (1) inlet side of OEM fuel filter. | 1 |
| 1350-0022 | Fuel line hose rubber. | 1 |
| **ALTERNATOR** | | |
| 1700-0005 | Alternator Leece Neville 320 amp. 320 amp SAE/275 amp NFPA. | 1 |
| **BATTERIES** | | |
| 1400-0002 | Battery four group 31 1000 CCA. | 1 |
| **CHASSIS OPTIONS** | | |
| 1680-0005 | Thermatic fan clutch. | 1 |
| 1680-0006 | Drivelines 1710. | 1 |
| 1680-0008 | Tow eyes front painted below bumper/cab (PR). | 1 |
| 1680-0012 | Tow eyes rear frame painted. | 1 |
| 1680-0051 | Aerial hydraulic activation system. | 1 |
| 1680-0250-M58 | Diesel Exhaust Fluid (DEF) 5 gallon tank for 2013 / 2016 EPA engines. Location: left side below rear of cab. | 1 |
| **CAB MODEL** | | |
| 1520-0071 | Cyclone II X medium cab with 58" CA. For use with a lowered aerial. Requires full length 4.5" deep trough option. | 1 |
| **CAB ROOF TYPE** | | |
| 1615-0016 | Cab roof to have a 4.5" deep x 44" wide trough for lowered aerial. | 1 |
| **CAB BADGE PACKAGE** | | |
| 1610-0000 | Cab and body to have applicable E-ONE logos. | 1 |
| **CAB DOOR OPTIONS** | | |
| 1550-0003 | Rear crew cab doors in the medium position. | 1 |
| 1550-0005 | Driver and officer cab door windows. Include forward vent windows. | 1 |
| 1550-0011 | Rear crew cab door windows. Includes manual roll-down actuation. Not available on Typhoon or CII with paddle style door latching. | 1 |
| 1550-0025 | All cab doors shall have "L" style exterior latches. | 1 |
| 1550-0027 | Front cab door windows to have manual actuation. | 1 |
| 1550-0038-659 | (4) LED cab step area lighting. Locate each light on each cab door in the inboard position. Lights to be switched with door ajar. | 1 |
| 1550-0059-000-G6 | Reflective Red/Lemon Yellow printed striping positioned in the "A" formation located on the cab door panels. | 1 |
| 1550-0072 | Cab door panels aluminum painted Zolatone gray. | 1 |
| 1550-0077 | Interior cab door locks - manual. Will have manual actuation from each respective door. Includes barrel style key lock on each exterior cab door. | 1 |
| 1550-0083 | All cab exterior access doors to have CH751 keyed locks. | 1 |

| | | |
|---|---|---|
| **MIRRORS** | | |
| 1670-0003 | Velvac 2010 mirrors. Door mounted west coast style with remote control and heat. | 1 |
| **MISC EXTERIOR CAB OPTIONS** | | |
| 1550-0020 | Windows cab side fixed driver's side. | 1 |
| 1550-0033 | Windows cab side fixed officer's side. | 1 |
| 1675-0022 | Pair of 18" handrails located just behind driver and officer front door one each side. | 1 |
| 1675-0023 | Pair of 18" handrails located just behind driver and officer rear door (ALS doors if equipped) one each side. | 1 |
| 1675-0030 | Mud flaps, front, black with E-ONE logo. | 1 |
| 1675-0047 | Rear cab wall to be 3/16" aluminum diamond plate. | 1 |
| 1675-0201 | Large radius cab wheel well. Includes bolt-on adjustable wheel well trim. | 1 |
| 1675-0202 | Mounting plate for battery charger receptacle, indicator and air inlet (if applicable). Plate to be removable brushed stainless steel. | 1 |
| 1675-0228 | The aerial roof trough to have a 1/8" embossed aluminum diamond plate overlay. | 1 |
| **HVAC** | | |
| 1515-0017 | Air conditioning for the Typhoon X, CII X and Quest with Cummins ISC/ISL engine and radiator mounted condenser. | 1 |
| 1515-0052 | Controls for heating and air conditioning shall be located in the center dash area upper tier. For use with severe duty dash only. | 1 |
| **SEATS** | | |
| 1510-0003 | Seats, Inc. brand 911 cab seats. | 1 |
| 1510-0008 | Seat color gray. | 1 |
| 1510-0035-147 | Universal air pack bottle bracket (EA). Location: officer's seat. | 1 |
| 1510-0035-148 | Universal air pack bottle bracket (EA). Location: rear facing driver's side. | 1 |
| 1510-0035-151 | Universal air pack bottle bracket (EA). Location: inboard driver's side rear wall. | 1 |
| 1510-0035-152 | Universal air pack bottle bracket (EA). Location: inboard officer's side rear wall. | 1 |
| 1510-0035-215 | Universal air pack bottle bracket (EA). Location: rear facing officer's side. | 1 |
| 1510-0038 | Driver seat 911 air ride. | 1 |
| 1510-0042 | Officer seat to be 911 fixed SCBA. | 1 |
| 1510-0050 | Rear facing 911 seat with SCBA driver's side. | 1 |
| 1510-0053 | Rear facing 911 seat with SCBA officer's side. | 1 |
| 1510-0062 | Two man bench centered on rear wall with 911 SCBA backs. Includes angled corners. | 1 |
| 1510-0234 | Seat cover material Turnout Tuff. | 1 |
| 1685-0033 | Seating capacity tag of six occupants. | 1 |
| **MISC INTERIOR CAB OPTIONS** | | |
| 1685-0000 | Cab interior gray. Does not include engine cover or seat color. | 1 |
| 1685-0006 | Padded sun visors, driver and officer's side overhead. | 1 |
| 1685-0161 | Severe duty dash package. Includes smooth plate alum center and officer side dash painted to match cab interior and lower dia plt kick panels. | 1 |
| 1685-0187 | Severe duty engine cover, molded polyurethane. | 1 |
| **CAB ELECTRICAL OPTIONS** | | |
| 1750-0013-172 | Turn signal Whelen 600 LED amber arrow pair located upper headlight bezel. | 1 |
| 1750-0024-179-04 | Auto-Eject receptacle inlet 20 amp located outside driver's door next to handrail with a Yellow cover. | 1 |
| 1750-0029 | Switch horn button two position DOT/air horn. | 1 |
| 1750-0046-195 | Cab Headlights. Position: lower. | 1 |
| 1750-0072-593 | 12 VDC (or 24VDC) electrical outlet in the cab wired battery hot. Location: officer side dash. | 2 |
| 1750-0075 | English dominant main cab gauge cluster. | 1 |
| 1750-0158 | Dome Lts Red/White LED. Package includes two lights mounted in the front and two mounted in the rear of the cab. White light wired through door and light | 1 |
| **CAB ELECTRICAL OPTIONS** | | |
| | assembly switch. Red light through light assembly switch. | |
| 1750-0198-A31 | Battery charger to be located behind driver's seat. | 1 |
| 1750-0343 | Battery charger E-ONE LPC 20. 120 volt inlet, 20 amp output. | 1 |

| | | |
|---|---|---|
| 1750-0435 | Halogen cab headlights. TyphoonX, CIIX and QST2 only. | 1 |
| 1750-0449 | Momentary DPF regeneration override switch. | 1 |

| BODY MODEL | | |
|---|---|---|
| 3080-0204 | Body aerial single axle LTH100 without pump (162 C/A for use with vertical SCR aftertreatment). 96" wide with L and R rescue style high sides and rear side staircases. Rear of body aft of rear jack legs raised 3". 61" high body. (10'-7" OAH with no wway, 10'10" OAH with wway). | 1 |

| BODY COMPT REAR | | |
|---|---|---|
| 3110-0360 | Rear of body to have un-painted smooth plate overlay style body panels to facilitate rear body striping. | 1 |

| AERIAL BODY OPTIONS | | |
|---|---|---|
| 3310-0032 | Recessed tubes for (6) pike poles. Not available on HP75 SideStacker. | 1 |
| 3310-0144 | Rear ladder tunnel doors. Vertically hinged smooth plate aluminum. Doors to hinge on outboard sides and latch in the middle. D-ring to be on right hand "primary" door. | 1 |
| 3310-0162 | Jack leg opening covers diamond plate (4) sets. Includes diamond plate outrigger covers and fixed diamond plate filler panels. HM100/110 requires surface mount warning lights. | 1 |
| 3310-0303 | Auxiliary jack pad 24X24 (4) with 20 degree formed handle. Includes (4) mounting brackets. | 1 |

| DOORS | | |
|---|---|---|
| 3300-0011-006 | Door single horizontal hinged lift-up box pan configuration painted. Location(s): L4 | 1 |
| 3300-0011-018 | Door single horizontal hinged lift-up box pan configuration painted. Location(s): R4 | 1 |
| 3300-0019-003 | Door roll up tall (greater than 45") with satin finish ROM. Location(s): L1. | 1 |
| 3300-0019-004 | Door roll up tall (greater than 45") with satin finish ROM. Location(s): L2. | 1 |
| 3300-0019-005 | Door roll up tall (greater than 45") with satin finish ROM. Location(s): L3. | 1 |
| 3300-0019-007 | Door roll up tall (greater than 45") with satin finish ROM. Location(s): L5. | 1 |
| 3300-0019-008 | Door roll up tall (greater than 45") with satin finish ROM. Location(s): L6. | 1 |
| 3300-0019-015 | Door roll up tall (greater than 45") with satin finish ROM. Location(s): R1. | 1 |
| 3300-0019-016 | Door roll up tall (greater than 45") with satin finish ROM. Location(s): R2. | 1 |
| 3300-0019-017 | Door roll up tall (greater than 45") with satin finish ROM. Location(s): R3. | 1 |
| 3300-0019-019 | Door roll up tall (greater than 45") with satin finish ROM. Location(s): R5. | 1 |
| 3300-0019-020 | Door roll up tall (greater than 45") with satin finish ROM. Location(s): R6. | 1 |

| SHELVES | | |
|---|---|---|
| 3370-0052-004 | Adjustable shelf (J-Style) for non-transverse compartments 16" or greater in depth. Location: L2. | 1 |
| 3370-0052-005 | Adjustable shelf (J-Style) for non-transverse compartments 16" or greater in depth. Location: L3. | 1 |
| 3370-0052-016 | Adjustable shelf (J-Style) for non-transverse compartments 16" or greater in depth. Location: R2. | 1 |
| 3370-0052-017 | Adjustable shelf (J-Style) for non-transverse compartments 16" or greater in depth. Location: R3. | 1 |
| 3370-0052-074 | Adjustable shelf (J-Style) for non-transverse compartments 16" or greater in depth. Location: R1 upper. | 1 |
| 3370-0052-083 | Adjustable shelf (J-Style) for non-transverse compartments 16" or greater in depth. Location: L6 lower. | 1 |
| 3370-0052-093 | Adjustable shelf (J-Style) for non-transverse compartments 16" or greater in depth. Location: R6 lower. | 1 |
| 3370-0053-069 | Adjustable shelf (C-Style) for non-transverse compartments up to 15.99" in depth. Location: L1 lower. | 1 |
| 3370-0053-081 | Adjustable shelf (C-Style) for non-transverse compartments up to 15.99" in depth. Location: L5 lower. | 1 |
| 3370-0053-091 | Adjustable shelf (C-Style) for non-transverse compartments up to 15.99" in depth. Location: R5 lower. | 1 |
| 3370-0054-004 | Tracks for adjustable shelf and/or adjustable tray in compartments 16" or greater in depth. Location: L2. | 1 |

| | | |
|---|---|---|
| 3370-0054-005 | Tracks for adjustable shelf and/or adjustable tray in compartments 16" or greater in depth. Location: L3. | 1 |
| 3370-0054-016 | Tracks for adjustable shelf and/or adjustable tray in compartments 16" or greater in depth. Location: R2. | 1 |
| 3370-0054-017 | Tracks for adjustable shelf and/or adjustable tray in compartments 16" or greater in depth. Location: R3. | 1 |
| 3370-0054-074 | Tracks for adjustable shelf and/or adjustable tray in compartments 16" or greater in depth. Location: R1 upper. | 1 |
| 3370-0054-083 | Tracks for adjustable shelf and/or adjustable tray in compartments 16" or greater in depth. Location: L6 lower. | 1 |
| 3370-0054-093 | Tracks for adjustable shelf and/or adjustable tray in compartments 16" or greater in depth. Location: R6 lower. | 1 |
| 3370-0055-069 | Tracks for adjustable shelf in shallow compartments up to 15.99" deep. Location: L1 lower. | 1 |
| 3370-0055-081 | Tracks for adjustable shelf in shallow compartments up to 15.99" deep. Location: L5 lower. | 1 |
| 3370-0055-091 | Tracks for adjustable shelf in shallow compartments up to 15.99" deep. Location: R5 lower. | 1 |

| LADDER STORAGE / RACKS | | |
|---|---|---|
| 3365-0037-U91 | Center mounted ladder tunnel. Ladder rack to hold: (2) PEL-35, PEL-28, PEL-24, TRL-20, PRL-16 and FL-10. | 1 |

| MISC BODY OPTIONS | | |
|---|---|---|
| 3340-0093 | Mud flaps, rear, black with E-ONE logo. | 1 |
| 3340-0282-X73 | Cab tilt switch and manual jack to be located: right side forward jack leg compartment low behind door in access panel (tilt sw behind door). | 1 |
| 3340-0486 | Diamond plate single axle wheel well. Includes bolt-on composite wheel well liners and bolt-on polished alum fenderettes. | 1 |
| 3340-0689 | Insulation to protect compartment from exhaust system heat. Locate behind R1 wall. | 1 |

| SCBA BOTTLE STORAGE | | |
|---|---|---|
| 3320-0005 | SCBA Bottle Storage. (4) Cast Product SCBA bottle storage with gasketed doors. (2) each side in rear wheel well area. | 1 |
| 3320-0100 | Strap(s), loop style to retain SCBA bottle(s). Locate one per bottle in each exterior storage compartment. | 4 |

| ELECTRICAL SYSTEMS | | |
|---|---|---|
| 5010-0039 | V-MUX Electrical system for aerials. | 1 |
| 5010-0049 | Vehicle data recorder - 2009 / 2016 NFPA compliant. Includes occupant detection shown in multiplex display. E-ONE chassis only. | 1 |
| 5010-0055-649 | Vista IV display for V-MUX electrical system. Location: driver's side engine cover. | 1 |

| LIGHT BARS | | |
|---|---|---|
| 5300-0506-000-4V | Light bar LED color: Red/White with clear lenses | 1 |
| 5300-0515 | Whelen MKEZ7 1.5" standard mount for mini front light bars (4). | 1 |
| 5300-0524-035 | Whelen F4 Mini-Freedom LED light bars (PR) 21.5" with 5 LEDs' in each bar. Location: front cab corners at 20 degree angle. | 1 |

| WARNING LIGHT PACKAGES | | |
|---|---|---|
| 5550-0059-535 | Whelen Super LED lower level warning light package. Includes (8) red 600 LED light heads and (2) red 500 LED light heads w/chrome flanges. Locate side facing lights: at forward most position, centered in rear wheel well, and side facing at rear of body in rubrail if equipped. | 1 |

| WARNING LIGHTS | | |
|---|---|---|
| 5600-0078-479-06 | Whelen Super LED beacon (PR) model L31H with Red domes. Location rear upper body on aerial style brackets. | 1 |
| 5600-0211-170 | Hazard (door ajar) light .75" LED red. Location: center overhead. | 1 |

| SIRENS | | |
|---|---|---|
| 5500-0015 | Whelen model 295SLSA1 siren with microphone (replaced 295HFSA1). | 1 |

| | | |
|---|---|---|
| 5500-0024-Z10 | The electronic siren control is to be located on the center of center dash upper tier (recessed). | 1 |

| SPEAKERS | | |
|---|---|---|
| 5510-0029-209 | Speaker, Federal Signal Dynamax ES100 with "E-ONE" grille through bumper. Location: driver side front bumper. | 1 |

| DOT LIGHTING | | |
|---|---|---|
| 5150-0006 | Whelen 600 series LED horizontal mount tail lights. Includes LED stop/tail, arrow turn and halogen back-up lights with horizontal Cast 3 housing and weatherproof connectors. | 1 |
| 5150-0017 | License plate light LED with chrome housing located at the rear of the body. | 1 |
| 5150-0026 | Marker light LED body/cab package. E-ONE custom cab with aerial ladder, Mid-Mount platform or Bronto bodies only. | 1 |
| 5150-0080-461 | Weldon auxiliary turn signal model 9186-8580 LED (PR). Location: (1) each side in body wheel well offset forward. | 1 |

| LIGHTS - COMPARTMENT, STEP & GROUND | | |
|---|---|---|
| 5380-0032 | Ground light package LED - large. | 1 |
| 5380-0136 | Compartment light package Amdor Luma-Bar LED for large bodies. Includes one light per compartment (two if transverse). | 1 |
| 5380-0232 | Step light package Whelen 2" LED - small. | 1 |

| LIGHTS - DECK AND SCENE | | |
|---|---|---|
| 5390-0007 | Deck/scene light circuit wiring through chassis reverse. Requires rear deck or scene light. | 1 |
| 5390-0058-444 | Deck Lights - Truck-Lite LED model 81380 (PR). Location: (1) each side over rear ladder tunnel. | 1 |

| LIGHTS - NON-WARNING | | |
|---|---|---|
| 5400-0003 | Engine compartment light (EA). | 1 |
| 5400-0054 | Spotlight Specialty 2150 hand held located on officer's side of cab dash w/12V receptacle. | 1 |

| CONTROLS / SWITCHES | | |
|---|---|---|
| 5100-0000-199 | Foot switch to control air horns located officer's side. | 1 |
| 5100-0007-198 | Foot switch to control electronic siren located driver's side. | 1 |
| 5100-0042-276 | Ramsey control with 3' cord for cab tilt in addition to standard toggle. Red/Black weatherproof push buttons at end of cord. Location of switch plug-in: next to manual cab tilt pump. | 1 |

| CAMERAS / INTERCOM | | |
|---|---|---|
| 5350-0156 | FRC ACT 2-way aerial intercom. | 1 |

| MISC ELECTRICAL | | |
|---|---|---|
| 5110-0017 | Back-up alarm 97 dB. | 1 |

| AERIAL MODEL | | |
|---|---|---|
| 6100-0030 | Lower aerial turntable pedestal and boom support 6in (HM100/110/LTH100). Top of turntable support to top of torque box to be 36.25in. | 1 |
| 6100-0042 | Ladder LTH100 without waterway. Includes left side console with cover, adjustable height turntable handrails, split steps at tip and jack leg flood lights. | 1 |

| AERIAL HYDRAULIC SYSTEM OPTIONS | | |
|---|---|---|
| 6150-0003-218 | Gauge aerial hydraulic oil level. Electronic display to be located next to aerial master panel. | 1 |

| AERIAL CONTROLS | | |
|---|---|---|
| 6850-0026 | Direct hydraulic aerial control system. | 1 |

| AERIAL WARNING LIGHTS | | |
|---|---|---|
| 6550-0002 | Outrigger warning lights (4) LED. Truck-Lite model 91R. | 1 |

| | | |
|---|---|---|
| **AERIAL LIGHTING** | | |
| 6560-0032 | Locate spot, flood and /or quartz lights on ladder fly section as far back from tip as possible. | 1 |
| 6560-0104-232 | Light Whelen Pioneer Plus 12V model PFP1P1 with PBAPEDD pedestal mount. Switched at light head and base console. Location(s): right side tip. | 1 |
| 6560-0127 | FireTech model FT-WL3500-FT-W LED flood/spot light. Includes hardwired switch on turntable console. Location: left and right side of base section. | 1 |
| **AERIAL LADDER BRACKETS** | | |
| 6600-0004-248 | Lift out style roof ladder bracket. Locate outside base section for a PRL-14 on left side of base section. Available on 95RM, 110, CR100 and HM100. | 1 |
| **SIGN PLATES** | | |
| 6750-0001-000-39 | Aerial sign plates 16 x 144 (PR). Available on LTH100, HP100L, HPS105L, HP95 and HP100P only (requires 6750-0014 for special bracket on HP100P if there are not ladder brackets on each side). Does not include lettering. Color: Job Color | 1 |
| **AERIAL TESTING** | | |
| 6900-0007 | Aerial 2016 NFPA Certification. | 1 |
| **HAND TOOLS** | | |
| 7600-0005 | Pike Pole Fiberglass 6'. | 2 |
| 7600-0006 | Pike Pole Fiberglass 8'. | 2 |
| 7600-0008 | Pike Pole Fiberglass 12'. | 2 |
| **GROUND LADDERS** | | |
| 7800-0007 | Alco-Lite PRL-14' roof ladder. | 1 |
| 7800-0010 | Alco-Lite PRL-16' roof ladder. | 1 |
| 7800-0012 | Alco-Lite TRL-20 Roof Ladder | 1 |
| 7800-0016 | Alco-Lite PEL-24' 2-section extension ladder. | 1 |
| 7800-0021 | Alco-Lite PEL-28' extension ladder. | 1 |
| 7800-0024 | Alco-Lite PEL-35' extension ladder. | 2 |
| 7800-0032 | Alco-Lite FL-10, 10' folding ladder w/safety shoes. | 1 |
| **MISC LOOSE EQUIPMENT** | | |
| 7600-0016 | Wheel chocks 44" NFPA compliant, pair (PR) of Zico SAC-44. Up to 44" diameter tires. Includes mounting brackets. | 4 |
| 7900-0014 | DOT Required Drive Away Kit - Kit includes three (3) triangular warning reflectors with carrying case. This kit is for the end user and is to remain with the truck. | 1 |
| **EXTERIOR PAINT** | | |
| 8100-0071 | Undercoating E-ONE. | 1 |
| 8100-0116 | Rear body surface to have a sanded finish (not painted job color). Includes hinged doors that do not have discrete sales codes and removable panels. | 1 |
| 8100-0176-000-17 | Paint E-ONE chassis cab - Sikkens paint. Color: FLNA3225E-1 Red. | 1 |
| 8100-0183-000-17 | Paint Body - Large - For Aerials, T/A Tankers/Wetsides, Rear Mounts and Rescues. Sikkens paint. Color: FLNA3225E-1 Red. | 1 |
| 8100-0354 | Paint lift cylinders, extension cylinders and upper turntable steelwork primary job color (does not apply to TT deck). | 1 |
| **INTERIOR PAINT** | | |
| 8150-0011 | The interior of the cab to be painted Zolatone gray. | 1 |
| **STRIPING** | | |
| 8200-0016 | White reflective tape on (4) outriggers. | 1 |
| 8300-0002-334-12 | NFPA Scotchlite Stripe - 4" wide and straight on front/sides of cab and sides/rear of body. Color: White. Location: bottom of stripe flush with top of bumper and straight back. | 1 |
| 8300-0042 | White rubrail scotchlite insert. | 1 |
| 8300-0123-000-72 | Chevron "A" style 6" printed pattern NFPA Scotchlite striping. Provided to driver and officer rear compartment face, smooth plate panels and/or doors outboard and above the center rear compartment opening and the vertical hosebed extrusions (terminate just above the upper hand rail stanchion). The vertical and horizontal extrusions inboard of the vertical hose bed extrusions shall remain visible with a sanded finish. Colors to be Yellow/Red. | 1 |

| | | |
|---|---|---|
| 8300-0313 | Yellow line to indicate designated standing / walking areas above 48" high in compliance with 2016 NFPA 1901. Line to be 1" wide. Steps, ladders and areas with a railing or structure at least 12" high are excluded from requiring the line. | 1 |

| GRAPHICS | | |
|---|---|---|
| 8400-0022 | Logo E-ONE (PR) on aerial lift cylinder. Logo to be black and white reflective material approx 14" long located midway along outward surface of cylinder. | 1 |

| WARRANTY / STANDARD & EXTENDED | | |
|---|---|---|
| 9100-0000 | Standard 1 Year Warranty. | 1 |
| 9100-0003 | Lifetime Frame Warranty. | 1 |
| 9100-0004 | 10 Year/100,000 Mile Structural Warranty for Alum Cab / Body - Statement of Warranty. | 1 |
| 9100-0007 | 20 Year Aerial Device Structural Warranty - Integrity Limited Warranty. | 1 |
| 9100-0019 | 10 Year Limited Paint and Perforation Warranty - For Sikkens Paint. | 1 |

| SUPPORT, DELIVERY, INSPECTIONS AND MANUALS | | |
|---|---|---|
| 9300-0000 | Vehicle familiarization aerial (Domestic). | 1 |
| 9300-0009 | Manuals, Operator and Service CD-ROM. | 1 |
| 9300-0016 | Approval Drawings-Standard. | 1 |
| 9300-0316 | Fire Apparatus Safety Guide published by FAMA, latest edition. | 1 |

PRICE - 2017 E-ONE M100 AERIAL LADDER - CYCLONE CHASSIS - $663,629

# STATE OF OHIO TERM SCHEDULE

## 4200 SURFACE RD
## COLUMBUS, OH 43228

*Quote No: 71280*

**8/27/2016**

**Quote Rev:17 Drawing Rev:9**

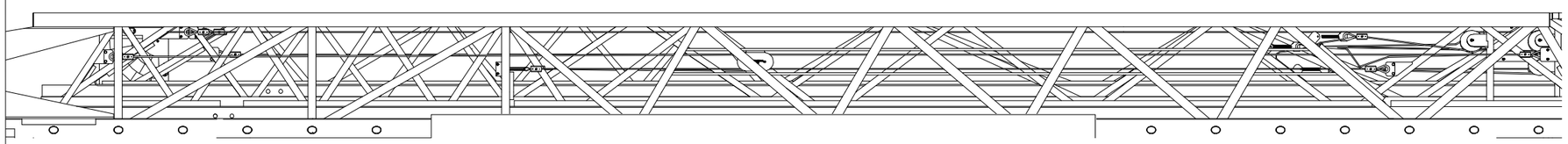

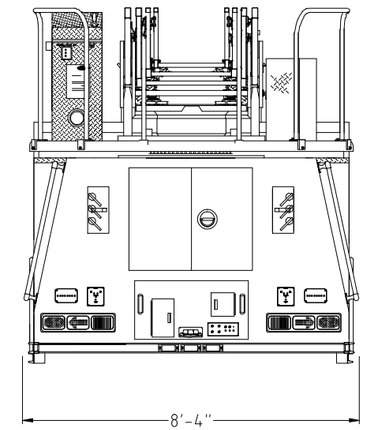


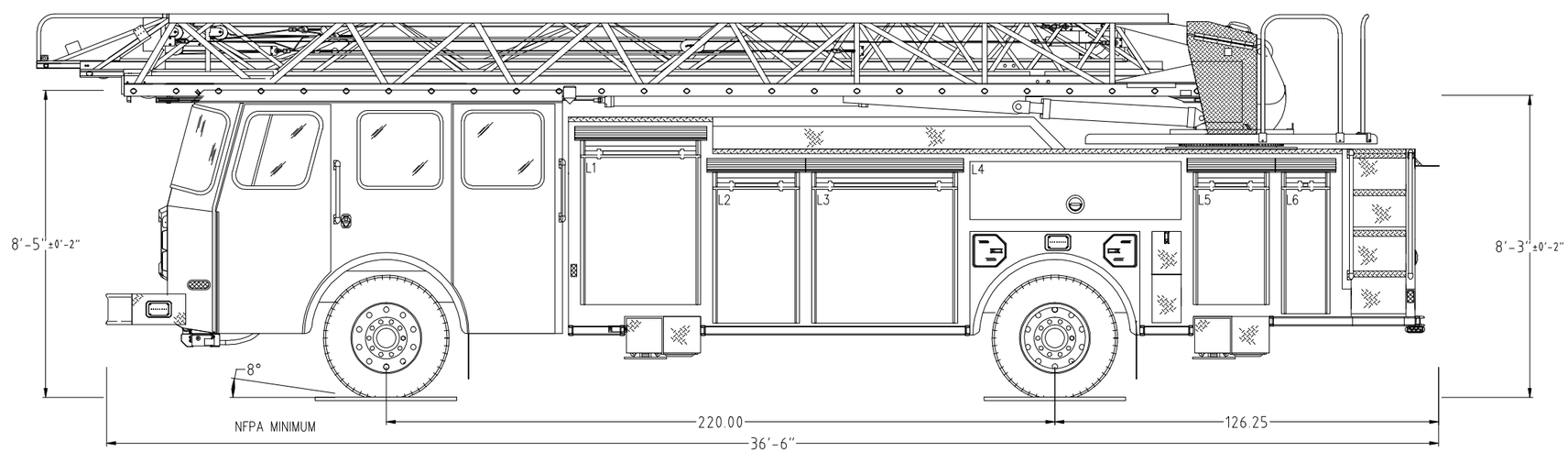


POWERED BY EZDRAW

Notice: This drawing provides a GENERAL REPRESENTATION of the vehicle configuration and should be used for evaluation purposes. The respective dimensions shown,including overall height and length, are estimates and may vary due to manufacturing processes. All other items such as lighting and fixtures, plumbing, compartmentation, and other generally assembled details are shown for REFERENCE ONLY and may not be a direct reflection of the final truck configuration. In ALL situations where this drawing may conflict with the specifications, THE SPECIFICATIONS, AS REFLECTED IN THE APPROVED SHOP ORDER, SHALL PREVAIL. Unless otherwise specified, the proposed apparatus will be manufactured to the latest NFPA recommendations as well as other applicable federally regulated safety regulations. E-One reserves the right to engineer and incorporate design improvements and changes without notice, while adhering to the intent of the specification.

| | |
|---|---|
| 0 GPM PUMP<br>0 TOTAL VOLUME<br>0 TOTAL FOAM | HOSE LOADS : |

| | OPENING | | INTERIOR DIMENSIONS | | | | |
|---|---|---|---|---|---|---|---|
| COMPT. | WIDTH | HEIGHT | WIDTH | LOWER HEIGHT | LOWER DEPTH | UPPER HEIGHT | UPPER DEPTH |
| L1 | 37.5 | 49.5 | 39.5 | 57.5 | 24 | 49.5 | 14 |
| L2 | 26.5 | 45 | 28.5 | 53 | 24 | N/A | N/A |
| L3 | 46 | 45 | 48 | 53 | 24 | N/A | N/A |
| L4 | 69.5 | 19 | 69.5 | 30 | 16 | N/A | N/A |
| L5 | 23 | 39 | 25 | 47 | 16 | 39 | 14 |
| L6 | 14 | 42 | 16 | 50 | 16 | 42 | 21 |
| R1 | 19 | 49.5 | 21 | 57.5 | 24 | 49.5 | 14 |
| R2 | 26.5 | 45 | 28.5 | 53 | 24 | N/A | N/A |
| R3 | 46 | 45 | 48 | 53 | 24 | N/A | N/A |
| R4 | 69.5 | 19 | 69.5 | 30 | 16 | N/A | N/A |
| R5 | 23 | 39 | 25 | 47 | 16 | 39 | 14 |
| R6 | 14 | 42 | 16 | 50 | 16 | 42 | 21 |

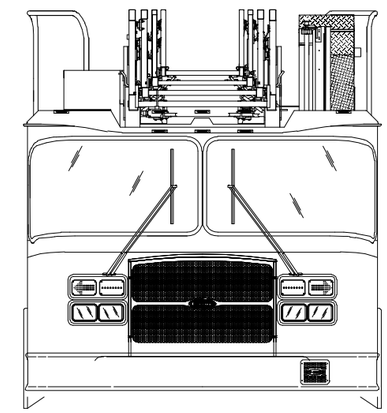

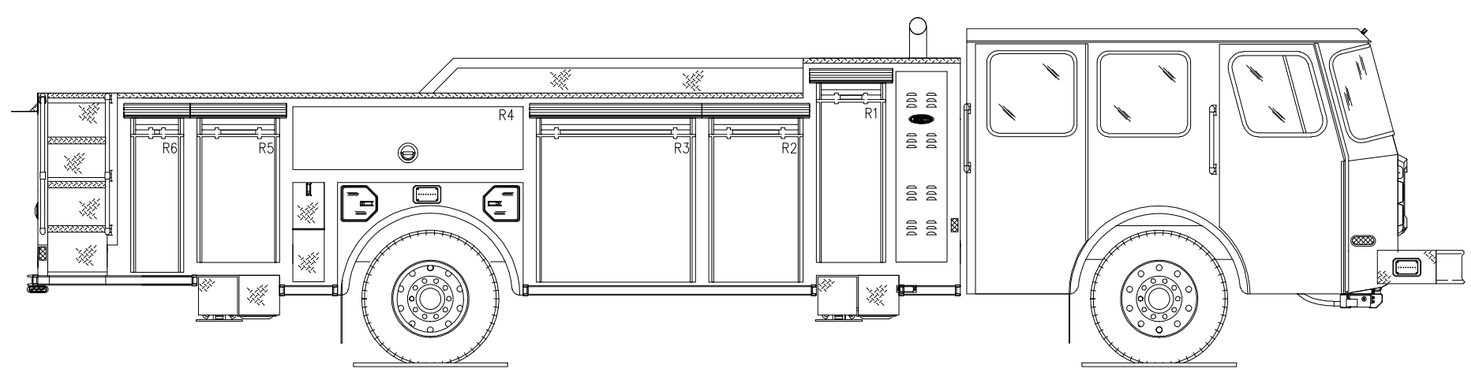


POWERED BY EZDRAW

Fire Apparatus Quotation for:
STATE OF OHIO TERM SCHEDULE

Quotation Number: 57492 Rev: 22

Unit Description: AERM-CYC2-100L
Quote Description: Aerial Rear Mount, Cyclone II, 100 Foot Ladder

| Salescode | Extended Description | Qty |
|---|---|---|
| **TESTING COMPLIANCE STANDARD** | | |
| 1001-0065 | The E-ONE supplied components of the vehicle shall meet the requirements of NFPA 1901, 2016 edition. | 1 |
| 3090-0002 | OAH. Unit has no overall height restrictions. | 1 |
| 3090-0004 | OAL. Unit has no overall length restrictions. | 1 |
| 3090-0006 | The hose bed is to have the capacity for the following hose. Hose load shall be listed from driver to officer. | 1 |
| 3340-1137-12C | Equipment allowance on the apparatus shall be 2500 lbs. This allowance is in addition to the weight of the hoses and ground ladders listed in the shop order as applicable. | 1 |
| **BUMPERS** | | |
| 1160-0000 | Bumper 10" stainless steel. | 1 |
| 1160-0008 | 3/16" Front Bumper Gravel Shield. | 1 |
| 1160-0013 | 16" Front Bumper Gravel Shield Extension. | 1 |
| **FRAME ASSEMBLY** | | |
| 1250-0005 | Frame - Torque box for tandem axle RM aerial. | 1 |
| **AXLE OPTIONS** | | |
| 1025-0012 | Meritor FL-943 front axle 21,000 lb. | 1 |
| 1025-0021 | Meritor RT-46-160 rear tandem axle 48,000 lb. capacity. | 1 |
| 1025-0028 | Koni shock absorbers for front axle - adjustable. | 1 |
| **SUSPENSIONS** | | |
| 1070-0002 | Rear suspension springs rated equal to the capacity of the axles. | 1 |
| **WHEEL OPTIONS** | | |
| 1050-0007 | Front axle wheel trim kit. Includes stainless steel lug nut covers (chrome plated plastic if applicable) and center cap with E-ONE logo. Note: Center cap will have an inspection port IPO a logo if equipped with Stemco oil seals. | 1 |
| 1050-0009 | Rear axle (tandem) wheel trim kit. Includes stainless steel lug nut covers (chrome plated plastic if applicable) and center caps with E-ONE logo. E-ONE custom chassis w/steel wheels will have chrome plated plastic lug covers. | 1 |
| 1050-0044 | Accuride aluminum wheels for front axle (2). | 1 |
| 1050-0046 | Accuride aluminum wheels for rear axles (8). | 1 |
| **TIRE OPTIONS** | | |
| 1060-0021 | Eight Michelin 11R rear tires with XDN2 mud and snow tread. | 1 |
| 1060-0046 | Two Michelin 425 tires model XFE for front axle. | 1 |
| 1060-0119 | RWC AirGuard LED tire pressure monitoring valve stem caps (10) for tandem rear axle applications. | 1 |
| **BRAKE SYSTEMS** | | |
| 1100-0001 | Meritor EX225H 17" disc brakes for front axle. | 1 |
| 1100-0006 | Parking brake release mounted on the driver's side lower dash. | 1 |
| 1100-0008 | Brake system air 6X4. | 1 |
| 1100-0014 | ArvinMeritor 16-1/2'' x 7'' S-cam brakes with cast brake drums for a tandem rear axle. | 1 |
| **AIR SYSTEM OPTIONS** | | |

| | | |
|---|---|---|
| 1110-0000-001 | Inlet for air system. Location: driver door jamb. | 1 |
| 1110-0002 | Air dryer Bendix AD-9. | 1 |
| 1110-0006 | Air lines nylon. | 1 |
| 1110-0026 | Air horns recessed in bumper (PR). | 1 |
| 1110-0027 | Isolated air tank. Includes pressure protection valve. | 1 |
| 1110-0043 | Auxiliary air tank to be plumbed to the following optional accessories (if equipped): Chassis air horns, brake system air outlet, air reel, light tower, air primer and or customer/dealer supplied pneumatic add-on(s). | 1 |

| ENGINES & TRANSMISSIONS | | |
|---|---|---|
| 1200-0017 | Push-button transmission shift selector. | 1 |
| 1200-0021 | TransSynd synthetic transmission fluid for EVS 4000. | 1 |
| 1200-0096 | Electronic speed limiting set at 60 MPH. | 1 |
| 1200-0316 | Eng/Trans Cummins ISX12 450HP with EVS4000 transmission. 2016 EPA Compliant. | 1 |

| SECONDARY BRAKING | | |
|---|---|---|
| 1125-0002 | Jacobs engine compression brake. | 1 |
| 1125-0023 | Transmission to seek second gear when Jacobs engine brake or Telma retarder is engaged. N/A with Trans retarder. | 1 |

| COOLING PACKAGE | | |
|---|---|---|
| 1800-0013 | Cooling system for use with Cyclone II X, Typhoon X, and Quest chassis. For use with 2010 / 2013 / 2016 EPA engines. Includes coolant recovery system. | 1 |

| FUEL SYSTEMS | | |
|---|---|---|
| 1350-0003 | Fuel system 50 gallon. | 1 |
| 1350-0011 | Fuel pump electric w/re-prime. | 1 |
| 1350-0012-670 | Fuel shut-off valve. Location: one (1) inlet side of OEM fuel filter. | 1 |
| 1350-0022 | Fuel line hose rubber. | 1 |

| ALTERNATOR | | |
|---|---|---|
| 1700-0005 | Alternator Leece Neville 320 amp. 320 amp SAE/275 amp NFPA. | 1 |

| BATTERIES | | |
|---|---|---|
| 1400-0002 | Battery four group 31 1000 CCA. | 1 |

| CHASSIS OPTIONS | | |
|---|---|---|
| 1680-0005 | Thermatic fan clutch. | 1 |
| 1680-0007 | Drivelines 1810. Required on 1550 lb/ft torque or greater engines. | 1 |
| 1680-0008 | Tow eyes front painted below bumper/cab (PR). | 1 |
| 1680-0012 | Tow eyes rear frame painted. | 1 |
| 1680-0051 | Aerial hydraulic activation system. | 1 |
| 1680-0250-M58 | Diesel Exhaust Fluid (DEF) 5 gallon tank for 2013 / 2016 EPA engines. Location: left side below rear of cab. | 1 |

| CAB MODEL | | |
|---|---|---|
| 1520-0008 | Cyclone II X medium cab with 58" CA | 1 |

| CAB ROOF TYPE | | |
|---|---|---|
| 1615-0004 | Cab roof to be "flat" with trough for waterway. Required with HM100 (with | 1 |

| CAB ROOF TYPE | |
|---|---|
| | waterway), HP100 (all), CR100/92 Pltfm (SdStckr and W/O/P) or HP/HPS100 Pltfrm (all). |

| CAB BADGE PACKAGE | | |
|---|---|---|
| 1610-0000 | Cab and body to have applicable E-ONE logos. | 1 |

| CAB DOOR OPTIONS | | |
|---|---|---|
| 1550-0003 | Rear crew cab doors in the medium position. | 1 |
| 1550-0005 | Driver and officer cab door windows. Include forward vent windows. | 1 |
| 1550-0011 | Rear crew cab door windows. Includes manual roll-down actuation. Not available on Typhoon or CII with paddle style door latching. | 1 |

| | | |
|---|---|---|
| 1550-0025 | All cab doors shall have "L" style exterior latches. | 1 |
| 1550-0027 | Front cab door windows to have manual actuation. | 1 |
| 1550-0037-659 | (4) Incandescent cab step area lighting. Locate each light in on each cab door in the inboard position. Lights to be switched with door ajar. | 1 |
| 1550-0059-000-G6 | Reflective Red/Lemon Yellow printed striping positioned in the "A" formation located on the cab door panels. | 1 |
| 1550-0072 | Cab door panels aluminum painted Zolatone gray. | 1 |
| 1550-0077 | Interior cab door locks - manual. Will have manual actuation from each respective door. Includes barrel style key lock on each exterior cab door. | 1 |
| 1550-0084 | All cab exterior access doors to have 1250 keyed locks. | 1 |

| MIRRORS | | |
|---|---|---|
| 1670-0003 | Velvac 2010 mirrors. Door mounted west coast style with remote control and heat. | 1 |

| MISC EXTERIOR CAB OPTIONS | | |
|---|---|---|
| 1550-0020 | Windows cab side fixed driver's side. | 1 |
| 1550-0033 | Windows cab side fixed officer's side. | 1 |
| 1675-0022 | Pair of 18" handrails located just behind driver and officer front door one each side. | 1 |
| 1675-0023 | Pair of 18" handrails located just behind driver and officer rear door (ALS doors if equipped) one each side. | 1 |
| 1675-0030 | Mud flaps, front, black with E-ONE logo. | 1 |
| 1675-0047 | Rear cab wall to be 3/16" aluminum diamond plate. | 1 |
| 1675-0201 | Large radius cab wheel well. Includes bolt-on adjustable wheel well trim. | 1 |
| 1675-0202 | Mounting plate for battery charger receptacle, indicator and air inlet (if applicable). Plate to be removable brushed stainless steel. | 1 |

| HVAC | | |
|---|---|---|
| 1515-0018 | Air conditioning for the Typhoon X, CII X and Quest with roof top mounted condenser. | 1 |
| 1515-0052 | Controls for heating and air conditioning shall be located in the center dash area upper tier. For use with severe duty dash only. | 1 |

| SEATS | | |
|---|---|---|
| 1510-0003 | Seats, Inc. brand 911 cab seats. | 1 |
| 1510-0008 | Seat color gray. | 1 |
| 1510-0035-147 | Universal air pack bottle bracket (EA). Location: officer's seat. | 1 |
| 1510-0035-148 | Universal air pack bottle bracket (EA). Location: rear facing driver's side. | 1 |
| 1510-0035-151 | Universal air pack bottle bracket (EA). Location: inboard driver's side rear wall. | 1 |
| 1510-0035-152 | Universal air pack bottle bracket (EA). Location: inboard officer's side rear wall. | 1 |
| 1510-0035-215 | Universal air pack bottle bracket (EA). Location: rear facing officer's side. | 1 |
| 1510-0038 | Driver seat 911 air ride. | 1 |
| 1510-0042 | Officer seat to be 911 fixed SCBA. | 1 |
| 1510-0050 | Rear facing 911 seat with SCBA driver's side. | 1 |
| 1510-0053 | Rear facing 911 seat with SCBA officer's side. | 1 |
| 1510-0062 | Two man bench centered on rear wall with 911 SCBA backs. Includes angled corners. | 1 |
| 1510-0234 | Seat cover material Turnout Tuff. | 1 |
| 1685-0033 | Seating capacity tag of six occupants. | 1 |

| MISC INTERIOR CAB OPTIONS | | |
|---|---|---|
| 1685-0000 | Cab interior gray. Does not include engine cover or seat color. | 1 |
| 1685-0005 | Lexan sun visors, driver and officer's side overhead. | 1 |
| 1685-0161 | Severe duty dash package. Includes smooth plate alum center and officer side dash painted to match cab interior and lower dia plt kick panels. | 1 |
| 1685-0187 | Severe duty engine cover, molded polyurethane. | 1 |

| CAB ELECTRICAL OPTIONS | | |
|---|---|---|
| 1750-0013-172 | Turn signal Whelen 600 LED amber arrow pair located upper headlight bezel. | 1 |
| 1750-0024-179-04 | Auto-Eject receptacle inlet 20 amp located outside driver's door next to handrail with a Yellow cover. | 1 |
| 1750-0029 | Switch horn button two position DOT/air horn. | 1 |

| | | |
|---|---|---|
| 1750-0046-195 | Cab Headlights. Position: lower. | 1 |
| 1750-0072-593 | 12 VDC (or 24VDC) electrical outlet in the cab wired battery hot. Location: officer side dash. | 2 |
| 1750-0075 | English dominant main cab gauge cluster. | 1 |
| 1750-0158 | Dome Lts Red/White LED. Package includes two lights mounted in the front and two mounted in the rear of the cab. White light wired through door and light assembly switch. Red light through light assembly switch. | 1 |
| 1750-0198-A31 | Battery charger to be located behind driver's seat. | 1 |
| 1750-0343 | Battery charger E-ONE LPC 20. 120 volt inlet, 20 amp output. | 1 |
| 1750-0435 | Halogen cab headlights. TyphoonX, CIIX and QST2 only. | 1 |
| 1750-0449 | Momentary DPF regeneration override switch. | 1 |
| **BODY SPEC** | | |
| 3090-0000 | Body Specs - SideStacker aerial with tandem axle. Includes left rear staircase with pocket style drop down step. | 1 |
| **BODY COMPT REAR** | | |
| 3110-0360 | Rear of body to have un-painted smooth plate overlay style body panels to facilitate rear body striping. | 1 |
| **AERIAL BODY OPTIONS** | | |
| 3310-0001 | Compartments driver side tandem axle HP SideStacker. Includes rescue style extended height compartments. | 1 |
| 3310-0008 | Compartments officer side tandem axle HP SideStacker. Includes rescue style extended height compartments ahead of wheel well with extended hosebed. | 1 |
| 3310-0032 | Recessed tubes for (6) pike poles. Not available on HP75 SideStacker. | 1 |
| 3310-0036 | Rollup rear ladder compartment door with satin finish for SideStacker and NPNT aerial with side staircases (N/A on HP100P). Includes hinged ladder retention plate. | 1 |
| 3310-0050 | Crosslay triple 5.5" wide single stack to hold up to 200' of 2.0" DJ (each) or 150'-200' 2.5" DJ (each). Includes storage pan to rear of crosslays | 1 |
| 3310-0162 | Jack leg opening covers diamond plate (4) sets. Includes diamond plate outrigger covers and fixed diamond plate filler panels. HM100/110 requires surface mount warning lights. | 1 |
| 3310-0303 | Auxiliary jack pad 24X24 (4) with 20 degree formed handle. Includes (4) mounting brackets. | 1 |
| **DOORS** | | |
| 3300-0007-017 | Door single vertical hinged painted. Location(s): R3 | 1 |
| 3300-0011-005 | Door single horizontal hinged lift-up box pan configuration painted. Location(s): L3 | 1 |
| 3300-0011-006 | Door single horizontal hinged lift-up box pan configuration painted. Location(s): L4 | 1 |
| 3300-0019-003 | Door roll up tall (greater than 45") with satin finish ROM. Location(s): L1. | 1 |
| 3300-0019-004 | Door roll up tall (greater than 45") with satin finish ROM. Location(s): L2. | 1 |
| 3300-0019-007 | Door roll up tall (greater than 45") with satin finish ROM. Location(s): L5. | 1 |
| 3300-0019-008 | Door roll up tall (greater than 45") with satin finish ROM. Location(s): L6. | 1 |
| 3300-0019-015 | Door roll up tall (greater than 45") with satin finish ROM. Location(s): R1. | 1 |
| 3300-0019-016 | Door roll up tall (greater than 45") with satin finish ROM. Location(s): R2. | 1 |
| 3300-0164-018 | Door double vertical hinged w/rotary latches - painted . Location(s): R4 | 1 |
| **COVERS** | | |
| 3305-0007-000-02 | Vinyl Red hose bed cover with attached rear flap(s). | 1 |
| 3305-0008-000-02 | Vinyl Red crosslay cover with attached side flaps. | 1 |
| **PUMP PANELS** | | |
| 3134-0016 | Stainless steel driver and officer side pump panels. | 1 |
| 3134-0064 | The gauge panel(s) on the driver side of the Side Mount module to be hinged upward. Panel(s) to include (2) mechanical/pneumatic (as applicable to panel size) hold opens and latches. | 1 |
| 3134-0146 | Officer side upper pump access panel to be horizontally hinged with stainless steel door. Includes (2) push button latches and (1) hold open device. | 1 |
| **MISC PUMP PANEL OPTIONS** | | |

| | | |
|---|---|---|
| 4460-0003 | Pump panel tags color coded per NFPA compliance. | 1 |
| **WATER TANK** | | |
| 4010-0198 | 500 gallon "T" water tank. UPF Poly III blue fill tower. | 1 |
| **TANK PLUMBING** | | |
| 4450-0010 | 2" tank fill Akron manual valve. | 1 |
| 4450-0022 | 3" tank to pump Akron manual valve. | 1 |
| **LADDER STORAGE / RACKS** | | |
| 3365-0037-614 | Center mounted ladder tunnel. Ladder rack to hold: PEL3-35, PEL-24, PRL-16, PRL-14, AEL-12 and FL-10. Requires roof ladder option on base section of aerial to meet 115' NFPA requirement. | 1 |
| **HANDRAILS / STEPS** | | |
| 3330-0002-050 | Slide-out platform, rollerless. Includes chrome grab handle centered on the front face of the platform (includes hand rail as applicable). Located below driver side pump panel. | 1 |
| 3330-0279-060 | Innovative Controls dual lighted LED folding step. Location: officer side front compartment face. Each location requires a minimum of (1) handrail per NFPA. | 3 |
| 3330-0279-062 | Innovative Controls dual lighted LED folding step. Location: driver side front compartment face. Each location requires a minimum of (1) handrail per NFPA. | 3 |
| **MISC BODY OPTIONS** | | |
| 3340-0093 | Mud flaps, rear, black with E-ONE logo. | 1 |
| 3340-0107 | Diamond plate tandem axle wheel well. Includes bolt-on composite wheel well liners and fenderettes. | 1 |
| 3340-0270 | The painted aerial body side panels shall be smooth / flush. Applies to SideStacker HB side, panels next to water tank on MM, and upper body sides on RLP. | 1 |
| **SCBA BOTTLE STORAGE** | | |
| 3320-0009 | SCBA Bottle Storage. (8) Cast Product SCBA bottle storage with gasketed doors. (4) each side in rear wheel well area. | 1 |
| 3320-0100 | Strap(s), loop style to retain SCBA bottle(s). Locate one per bottle in each exterior storage compartment. | 8 |
| **PUMPS** | | |
| 4005-0031 | Rating 1500 GPM. | 1 |
| 4005-0196 | Hale QMAX 1000-2250 GPM single stage pump. Requires primer option. | 1 |
| **PUMP CERTIFICATION** | | |
| 4475-0000 | Pump certification 750-2250 GPM | 1 |
| **PUMP OPTIONS** | | |
| 4015-0008 | Zinc anodes for Hale pump (PR), (1) discharge side and (1) intake side. | 1 |
| 4015-0022 | Mechanical pump seal - Hale. | 1 |
| 4015-0052-198 | Steamers to be Flush. Location: driver's side. | 1 |
| 4015-0052-199 | Steamers to be Flush. Location: officer's side. | 1 |
| 4015-0073 | Manual operated master pump drain. The master drain shall be clearly marked and placed in accessible location below running board on driver side or L1 compartment. | 1 |
| 4015-0210 | Pump cooler with Innovative Control 1/4 turn valve with "T" handle and label. | 1 |
| 4015-0238 | Hale electric primer (oil-less). | 1 |
| **INTAKES** | | |
| 4440-0005 | 2.5" Left Intake Akron Manual Valve. | 1 |
| **INTAKE OPTIONS** | | |
| 4445-0009 | Intake relief valve, Akron. | 1 |
| **DISCHARGES AND PRECONNECTS** | | |
| 4415-0012-654 | 1.5" Crosslay with Akron manual valve. Location: crosslay 1 & 2. | 2 |

| | | |
|---|---|---|
| 4415-0014-581 | 2.5" Left Pump Panel Discharge Akron Manual Valve. Location: left side discharge 1. | 1 |
| 4415-0014-582 | 2.5" Left Pump Panel Discharge Akron Manual Valve. Location: left side discharge 2. | 1 |
| 4415-0016-584 | 2.5" Right Pump Panel Discharge Akron Manual Valve. Location: right side discharge 2. | 1 |
| 4415-0051 | 4" Waterway Discharge with 3" Akron Manual Valve. | 1 |
| 4415-0054-583 | 4" Right Pump Panel Discharge with 3" Akron Manual Valve (Waterous pumps noted location to be forward lower port). Location: right side discharge 1. | 1 |
| 4415-0058-655 | 2.5" Crosslay Akron Manual Valve. Location: crosslay 3. | 1 |
| DISCHARGE OPTIONS | | |
| 4417-0175 | Innovative Controls push/pull valve controls with locking T handles. | 1 |
| 4417-0176 | Innovative Controls 3/4" bleeder/drain valve include lift lever with ergonomic grip. | 8 |
| 4417-0185 | Innovative Controls discharge and intake bezels with integral color code and verbiage for side mount pump panel. | 1 |
| PRESSURE GOVERNORS | | |
| 4465-0011 | Class 1 TPG pressure governor. Includes, water, oil, volt and tachometer. | 1 |
| GAUGES | | |
| 4435-0083 | Innovative Controls 10 LED SL series water tank level gauge. On pump panel. | 1 |
| 4435-0246 | 2.5" Innovative Controls stainless steel case pressure gauge (0-400) with color code bezel. | 8 |
| 4435-0247 | 4" Innovative Controls stainless steel case master pressure gauges with bezel. Intake 30-0-400, and discharge 0-400. | 1 |
| ELECTRICAL SYSTEMS | | |
| 5010-0013-E91 | Vehicle data recorder - 2009 / 2016 NFPA compliant. Includes occupant detection with display. Display location: Driver side of center dash electrical cover. | 1 |
| 5010-0039 | V-MUX Electrical system for aerials. | 1 |
| 5010-0059-339 | VFD Text display for V-MUX electrical system. Location: center of dash. | 1 |
| LIGHT BARS | | |
| 5300-0506-000-4V | Light bar LED color: Red/White with clear lenses | 1 |
| 5300-0515 | Whelen MKEZ7 1.5" standard mount for mini front light bars (4). | 1 |
| 5300-0524-034 | Whelen F4 Mini-Freedom LED light bars (PR) 21.5" with 5 LEDs' in each bar. Location: front cab corners. | 1 |
| WARNING LIGHT PACKAGES | | |
| 5550-0059-538 | Whelen Super LED lower level warning light package. Includes (8) red 600 LED light heads and (2) red 500 LED light heads w/chrome flanges. Locate side facing lights: at forward most position, in rear wheel well offset to front, and side facing at rear of body in rubrail if equipped. | 1 |
| WARNING LIGHTS | | |
| 5600-0078-290-06 | Whelen Super LED beacon (PR) model L31H with Red domes. Location above L2/R2 compartments offset rearward to supplement upper rear warnings. | 1 |
| 5600-0078-479-06 | Whelen Super LED beacon (PR) model L31H with Red domes. Location rear upper body on aerial style brackets. | 1 |
| 5600-0105-170 | Hazard (door ajar) light 2" LED. Location: center overhead. | 1 |
| SIRENS | | |
| 5500-0015 | Whelen model 295SLSA1 siren with microphone (replaced 295HFSA1). | 1 |
| 5500-0024-170 | The electronic siren control is to be located on the center overhead. | 1 |
| SPEAKERS | | |
| 5510-0029-209 | Speaker, Federal Signal Dynamax ES100 with "E-ONE" grille through bumper. Location: driver side front bumper. | 1 |
| DOT LIGHTING | | |
| 5150-0006 | Whelen 600 series LED horizontal mount tail lights. Includes LED stop/tail, arrow | 1 |

| | | |
|---|---|---|
| | turn and halogen back-up lights with horizontal Cast 3 housing and weatherproof connectors. | |
| 5150-0017 | License plate light LED with chrome housing located at the rear of the body. | 1 |
| 5150-0026 | Marker light LED body/cab package. E-ONE custom cab with aerial ladder, Mid-Mount platform or Bronto bodies only. | 1 |
| 5150-0080-462 | Weldon auxiliary turn signal model 9186-8580 LED (PR). Location: (1) each side in center of rear tandem wheel well. | 1 |
| LIGHTS - COMPARTMENT, STEP & GROUND | | |
| 5380-0032 | Ground light package LED - large. | 1 |
| 5380-0036 | Step light package body LED - small. | 1 |
| 5380-0136 | Compartment light package Amdor Luma-Bar LED for large bodies. Includes one light per compartment (two if transverse). | 1 |
| LIGHTS - DECK AND SCENE | | |
| 5390-0007 | Deck/scene light circuit wiring through chassis reverse. Requires rear deck or scene light. | 1 |
| 5390-0076 | Hose bed light Truck-Lite LED model 81380. Locate at front of hose bed. Switched with work light switch in cab. | 1 |
| 5390-0102 | Crosslay light Truck-Lite LED model 81380. Locate to rear of crosslay (SM) and forward of crosslay (TM as applicable). Switched with work light switch in cab. | 1 |
| 5390-0152-446 | Whelen 600 series gradient Super LED surface mounted scene lights (PR) with weatherproof connectors. Switch in cab (driver and officer side lights switched separately). Locate (1) each side at rear below pike pole compts. | 1 |
| LIGHTS - NON-WARNING | | |
| 5400-0003 | Engine compartment light (EA). | 1 |
| 5400-0010 | Incandescent pump compartment light (EA). | 1 |
| 5400-0054 | Spotlight Specialty 2150 hand held located on officer's side of cab dash w/12V receptacle. | 1 |
| 5400-0092 | Weldon pump panel LED light package with (3) lights per side pump panel. Pump panels over 45" may require additional lights. Side mount only. | 1 |
| CONTROLS / SWITCHES | | |
| 5100-0000-199 | Foot switch to control air horns located officer's side. | 1 |
| 5100-0007-198 | Foot switch to control electronic siren located driver's side. | 1 |
| CAMERAS / INTERCOM | | |
| 5350-0156 | FRC ACT 2-way aerial intercom. | 1 |
| MISC ELECTRICAL | | |
| 1750-0082-762 | 12V power distribution module. Includes (6) battery hot and (6) switched hot circuits. 100 amps max (IATS). Location: behind officer's seat. | 1 |
| 5110-0017 | Back-up alarm 97 dB. | 1 |
| LIGHTS - QUARTZ | | |
| 5450-0144-063 | Fire Research, FRC Evolution 12V LED scene light model FCA530-V15-SW-H with external push-up pole. Includes switch in cab accessible to driver. Location: officer side back of cab. | 1 |
| 5450-0144-064 | Fire Research, FRC Evolution 12V LED scene light model FCA530-V15-SW-H with external push-up pole. Includes switch in cab accessible to driver. Location: driver side back of cab. | 1 |
| AERIAL MODEL | | |
| 6100-0009 | Ladder HP100 SideStacker. Includes pinned waterway, left side console with cover, turntable mansaver bars, split steps at tip and jack leg flood lights. | 1 |
| AERIAL HYDRAULIC SYSTEM OPTIONS | | |
| 6150-0003-216 | Gauge aerial hydraulic oil level. Electronic display to be located on pump operator's panel. | 1 |
| AERIAL CONTROLS | | |
| 6850-0026 | Direct hydraulic aerial control system. | 1 |

| | | |
|---|---|---|
| **MONITORS** | | |
| 6300-0002 | Monitor Akron electric 1000 GPM for ladder. Includes tip and base controls. | 1 |
| 6300-0017 | Monitor painted silver from OEM. | 1 |
| **AERIAL WARNING LIGHTS** | | |
| 6550-0002 | Outrigger warning lights (4) LED. Truck-Lite model 91R. | 1 |
| **AERIAL LIGHTING** | | |
| 6560-0104-232 | Light Whelen Pioneer Plus 12V model PFP1P1 with PBAPEDD pedestal mount. Switched at light head and base console. Location(s): right side tip. | 1 |
| 6560-0127 | FireTech model FT-WL3500-FT-W LED flood/spot light. Includes hardwired switch on turntable console. Location: left and right side of base section. | 1 |
| **WATERWAY OPTIONS** | | |
| 6350-0005 | Rear 4" NST waterway inlet for rear mounted aerials. Includes chrome cap. | 1 |
| 6350-0010 | Flowminder with single readout and totalizer for the aerial waterway to be located at the aerial control station. | 1 |
| 6350-0067 | 2.5" Innovative Controls stainless steel case pressure gauge (0-400) with color code bezel. Locate next to waterway inlet. | 1 |
| **SIGN PLATES** | | |
| 6750-0000-000-39 | Aerial sign plates 10 x 144 (PR). Available on Booms, HP75 and HP100 only. Does not include lettering. Color: Job Color. | 1 |
| **AERIAL TESTING** | | |
| 6900-0000 | Aerial flow test - 3rd party. | 1 |
| 6900-0007 | Aerial 2016 NFPA Certification. | 1 |
| **ELBOWS** | | |
| 7400-0004 | Elbow 30 degree chrome swivel w/2.5"FNST x 2.5"MNST. | 3 |
| **ADAPTERS** | | |
| 7200-0026 | Swivel Connector 4" FNST x 5" Storz 30 Deg Elbow with Tethered Cap. | 1 |
| **HAND TOOLS** | | |
| 7600-0005 | Pike Pole Fiberglass 6'. | 2 |
| 7600-0006 | Pike Pole Fiberglass 8'. | 2 |
| 7600-0008 | Pike Pole Fiberglass 12'. | 2 |
| **GROUND LADDERS** | | |
| 7800-0007 | Alco-Lite PRL-14' roof ladder. | 1 |
| 7800-0010 | Alco-Lite PRL-16' roof ladder. | 1 |
| 7800-0013 | Alco-Lite AEL-12 Attic Extension Ladder | 1 |
| 7800-0016 | Alco-Lite PEL-24' 2-section extension ladder. | 1 |
| 7800-0023 | Alco-Lite PEL3-35' 3-section extension ladder. | 1 |
| 7800-0032 | Alco-Lite FL-10, 10' folding ladder w/safety shoes. | 1 |
| **MISC LOOSE EQUIPMENT** | | |
| 7600-0016 | Wheel chocks 44" NFPA compliant, pair (PR) of Zico SAC-44. Up to 44" diameter tires. Includes mounting brackets. | 4 |
| 7900-0014 | DOT Required Drive Away Kit - Kit includes three (3) triangular warning reflectors with carrying case. This kit is for the end user and is to remain with the truck. | 1 |
| **EXTERIOR PAINT** | | |
| 8100-0071 | Undercoating E-ONE. | 1 |
| 8100-0084 | All applicable pump/pre-connect application modules are to have a job color finish. Includes upper and lower pump modules, crosswalk module and/or speedlay/pre-connect module (as applicable). Rear mounted body/pump module to be painted job color. | 1 |
| 8100-0116 | Rear body surface to have a sanded finish (not painted job color). Includes hinged doors that do not have discrete sales codes and removable panels. | 1 |
| 8100-0176-000-17 | Paint E-ONE chassis cab - Sikkens paint. Color: FLNA3225E-1 Red. | 1 |
| 8100-0183-000-17 | Paint Body - Large - For Aerials, T/A Tankers/Wetsides, Rear Mounts and Rescues. Sikkens paint. | 1 |

| | | |
|---|---|---|
| | Color: FLNA3225E-1 Red. | |
| 8100-0356 | Paint lift cylinders, extension cylinders and upper turntable steelwork FLNA4006 white (does not apply to TT deck). | 1 |
| INTERIOR PAINT | | |
| 8150-0011 | The interior of the cab to be painted Zolatone gray. | 1 |
| STRIPING | | |
| 8200-0016 | White reflective tape on (4) outriggers. | 1 |
| 8300-0002-334-12 | NFPA Scotchlite Stripe - 4" wide and straight on front/sides of cab and sides/rear of body. Color: White. Location: bottom of stripe flush with top of bumper and straight back. | 1 |
| 8300-0042 | White rubrail scotchlite insert. | 1 |
| 8300-0123-000-72 | Chevron "A" style 6" printed pattern NFPA Scotchlite striping. Provided to driver and officer rear compartment face, smooth plate panels and/or doors outboard and above the center rear compartment opening and the vertical hosebed extrusions (terminate just above the upper hand rail stanchion). The vertical and horizontal extrusions inboard of the vertical hose bed extrusions shall remain visible with a sanded finish. Colors to be Yellow/Red. | 1 |
| 8300-0313 | Yellow line to indicate designated standing / walking areas above 48" high in compliance with 2016 NFPA 1901. Line to be 1" wide. Steps, ladders and areas with a railing or structure at least 12" high are excluded from requiring the line. | 1 |
| GRAPHICS | | |
| 8400-0022 | Logo E-ONE (PR) on aerial lift cylinder. Logo to be black and white reflective material approx 14" long located midway along outward surface of cylinder. | 1 |
| WARRANTY / STANDARD & EXTENDED | | |
| 9100-0000 | Standard 1 Year Warranty. | 1 |
| 9100-0003 | Lifetime Frame Warranty. | 1 |
| 9100-0004 | 10 Year/100,000 Mile Structural Warranty for Alum Cab / Body - Statement of Warranty. | 1 |
| 9100-0005 | 10 Year Stainless Steel Plumbing Warranty - Statement of Warranty. | 1 |
| 9100-0007 | 20 Year Aerial Device Structural Warranty - Integrity Limited Warranty. | 1 |
| 9100-0019 | 10 Year Limited Paint and Perforation Warranty - For Sikkens Paint. | 1 |
| SUPPORT, DELIVERY, INSPECTIONS AND MANUALS | | |
| 9300-0000 | Vehicle familiarization aerial (Domestic). | 1 |
| 9300-0009 | Manuals, Operator and Service CD-ROM. | 1 |
| 9300-0016 | Approval Drawings-Standard. | 1 |
| 9300-0316 | Fire Apparatus Safety Guide published by FAMA, latest edition. | 1 |

PRICE - 2017 E-ONE HP100 AERIAL LADDER QUINT - CYCLONE CHASSIS - $902,769

# STATE OF OHIO TERM SCHEDULE

4200 SURFACE RD
COLUMBUS, OH 43228

*Quote No: 57492*

8/27/2016

Quote Rev:22 Drawing Rev:7

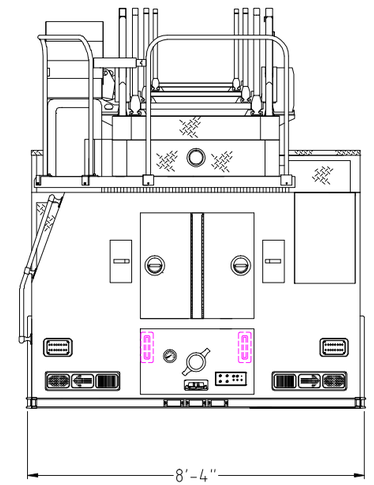


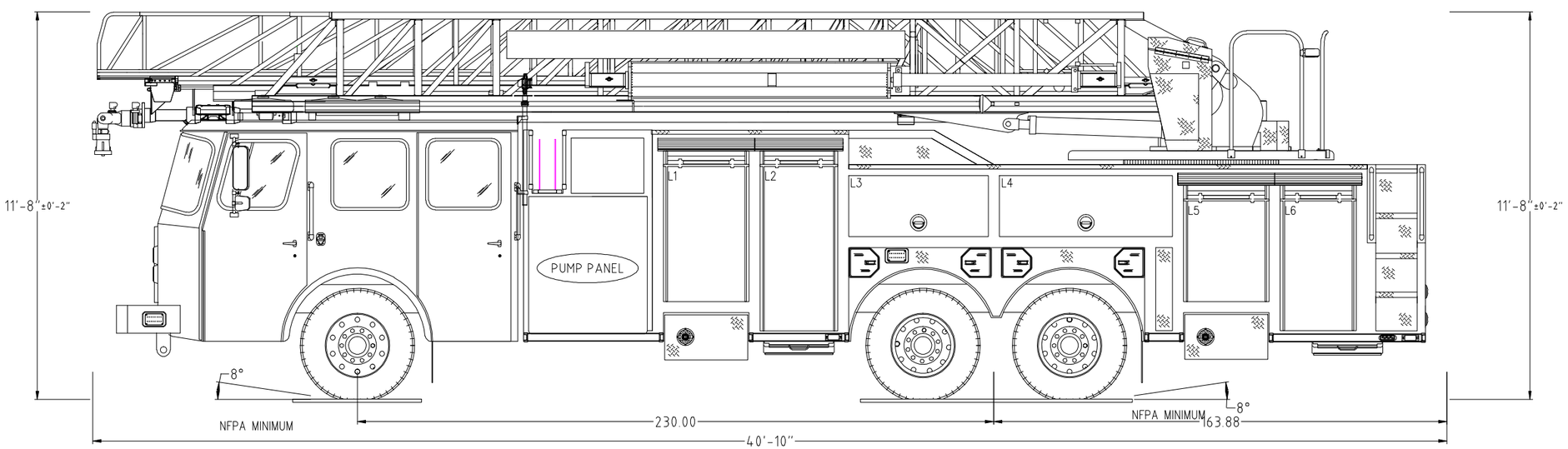


POWERED BY EZDRAW

Notice: This drawing provides a GENERAL REPRESENTATION of the vehicle configuration and should be used for evaluation purposes. The respective dimensions shown,including overall height and length, are estimates and may vary due to manufacturing processes. All other items such as lighting and fixtures, plumbing, compartmentation, and other generally assembled details are shown for REFERENCE ONLY and may not be a direct reflection of the final truck configuration. In ALL situations where this drawing may conflict with the specifications, THE SPECIFICATIONS, AS REFLECTED IN THE APPROVED SHOP ORDER, SHALL PREVAIL. Unless otherwise specified, the proposed apparatus will be manufactured to the latest NFPA recommendations as well as other applicable federally regulated safety regulations. E-One reserves the right to engineer and incorporate design improvements and changes without notice, while adhering to the intent of the specification.

| | |
|---|---|
| 1500 GPM PUMP<br>0 TOTAL VOLUME<br>0 TOTAL FOAM | HOSE LOADS : |

| | OPENING | | INTERIOR DIMENSIONS | | | | |
|---|---|---|---|---|---|---|---|
| COMPT. | WIDTH | HEIGHT | WIDTH | LOWER HEIGHT | LOWER DEPTH | UPPER HEIGHT | UPPER DEPTH |
| L1 | 29 | 50 | 31 | 58 | 14 | 50 | 19 |
| L2 | 26 | 60.56 | 28 | 68.56 | 25 | 60.56 | 19 |
| L3 | 50.5 | 22 | 50.5 | N/A | N/A | 22 | 25 |
| L4 | 62.5 | 22 | 62.5 | N/A | N/A | 22 | 20 |
| L5 | 29 | 37.5 | 31 | 45.5 | 14 | 37.5 | 18 |
| L6 | 25.5 | 48 | 27.5 | 56 | 22 | 48 | 18 |
| R1 | 29 | 50 | 31 | 58 | 14 | 50 | 19 |
| R2 | 26 | 60.5 | 28 | 68.5 | 25 | 60.5 | 19 |
| R3 | 31 | 19.5 | 31 | 30 | 14 | N/A | N/A |
| R4 | 50.5 | 30 | 50.5 | 30 | 22 | N/A | N/A |

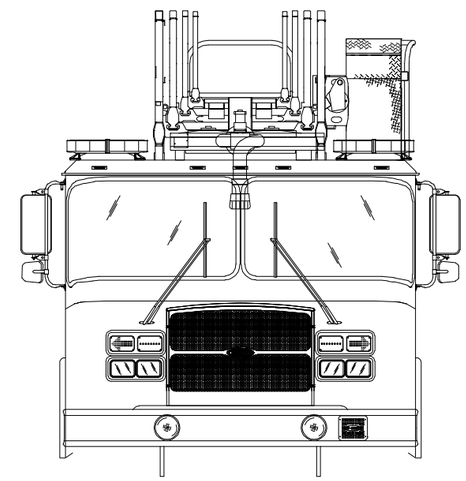

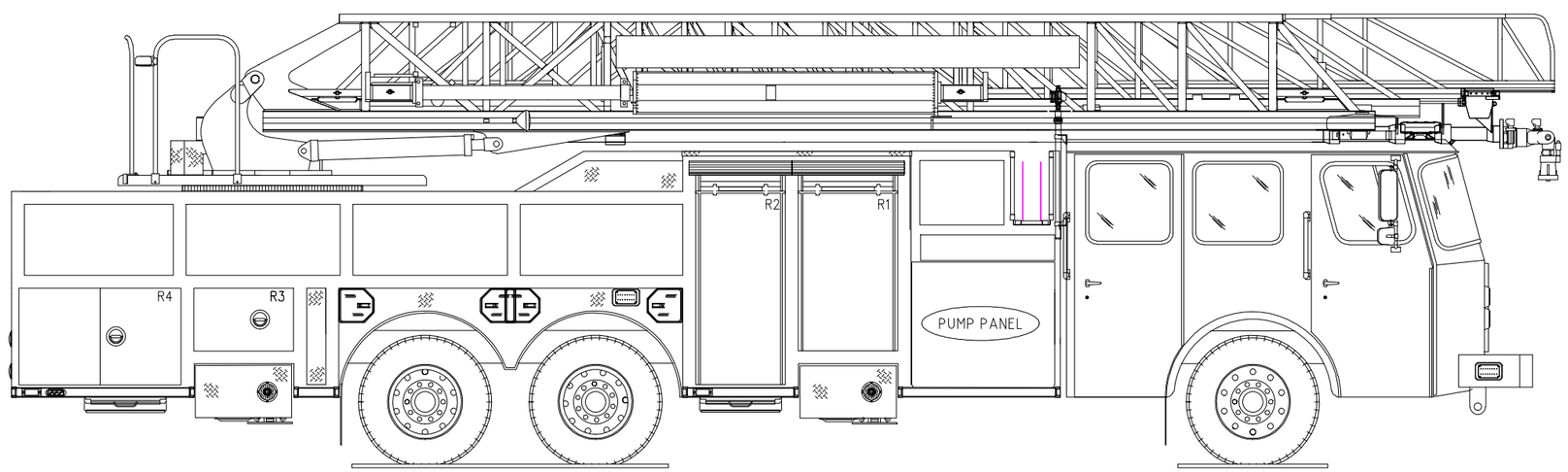


POWERED BY EZDRAW

Fire Apparatus Quotation for:
STATE OF OHIO TERM SCHEDULE

Quotation Number: 57493 Rev: 23

Unit Description: AERM-CYC2-137L
Quote Description: Aerial Rear Mount, Cyclone II, 137 Foot Ladder

| Salescode | Extended Description | Qty |
|---|---|---|
| **TESTING COMPLIANCE STANDARD** | | |
| 1001-0065 | The E-ONE supplied components of the vehicle shall meet the requirements of NFPA 1901, 2016 edition. | 1 |
| 3090-0001 | Hosebed hoseload allowance on the apparatus shall be 1000 lbs. | 1 |
| 3090-0002 | OAH. Unit has no overall height restrictions. | 1 |
| 3090-0004 | OAL. Unit has no overall length restrictions. | 1 |
| 3340-1137-12C | Equipment allowance on the apparatus shall be 2500 lbs. This allowance is in addition to the weight of the hoses and ground ladders listed in the shop order as applicable. | 1 |
| **BUMPERS** | | |
| 1160-0000 | Bumper 10" stainless steel. | 1 |
| 1160-0008 | 3/16" Front Bumper Gravel Shield. | 1 |
| 1160-0013 | 16" Front Bumper Gravel Shield Extension. | 1 |
| **FRAME ASSEMBLY** | | |
| 1250-0005 | Frame - Torque box for tandem axle RM aerial. | 1 |
| **AXLE OPTIONS** | | |
| 1025-0023 | Meritor RT-50-160 rear tandem axle 54,000 lb. capacity. | 1 |
| 1025-0028 | Koni shock absorbers for front axle - adjustable. | 1 |
| 1025-0060 | Meritor FL-943 front axle 22,100 lb. | 1 |
| **SUSPENSIONS** | | |
| 1070-0002 | Rear suspension springs rated equal to the capacity of the axles. | 1 |
| **WHEEL OPTIONS** | | |
| 1050-0007 | Front axle wheel trim kit. Includes stainless steel lug nut covers (chrome plated plastic if applicable) and center cap with E-ONE logo. Note: Center cap will have an inspection port IPO a logo if equipped with Stemco oil seals. | 1 |
| 1050-0009 | Rear axle (tandem) wheel trim kit. Includes stainless steel lug nut covers (chrome plated plastic if applicable) and center caps with E-ONE logo. E-ONE custom chassis w/steel wheels will have chrome plated plastic lug covers. | 1 |
| 1050-0044 | Accuride aluminum wheels for front axle (2). | 1 |
| 1050-0046 | Accuride aluminum wheels for rear axles (8). | 1 |
| **TIRE OPTIONS** | | |
| 1060-0022 | Eight Michelin 12R rear tires with XDN2 mud and snow tread. | 1 |
| 1060-0046 | Two Michelin 425 tires model XFE for front axle. | 1 |
| 1060-0119 | RWC AirGuard LED tire pressure monitoring valve stem caps (10) for tandem rear axle applications. | 1 |
| **BRAKE SYSTEMS** | | |
| 1100-0001 | Meritor EX225H 17" disc brakes for front axle. | 1 |
| 1100-0006 | Parking brake release mounted on the driver's side lower dash. | 1 |
| 1100-0008 | Brake system air 6X4. | 1 |
| 1100-0014 | ArvinMeritor 16-1/2'' x 7'' S-cam brakes with cast brake drums for a tandem rear axle. | 1 |
| 1100-0026 | G4 Electronic Stability Control (6x4), Includes RSC and ATC. Not available on 6x6 or commercial chassis. | 1 |

| AIR SYSTEM OPTIONS | | |
|---|---|---|
| 1110-0000-001 | Inlet for air system. Location: driver door jamb. | 1 |
| 1110-0002 | Air dryer Bendix AD-9. | 1 |
| 1110-0006 | Air lines nylon. | 1 |
| 1110-0026 | Air horns recessed in bumper (PR). | 1 |
| 1110-0027 | Isolated air tank. Includes pressure protection valve. | 1 |
| 1110-0043 | Auxiliary air tank to be plumbed to the following optional accessories (if equipped): Chassis air horns, brake system air outlet, air reel, light tower, air primer and or customer/dealer supplied pneumatic add-on(s). | 1 |

| ENGINES & TRANSMISSIONS | | |
|---|---|---|
| 1200-0017 | Push-button transmission shift selector. | 1 |
| 1200-0021 | TransSynd synthetic transmission fluid for EVS 4000. | 1 |
| 1200-0096 | Electronic speed limiting set at 60 MPH. | 1 |
| 1200-0317 | Eng/Trans Cummins ISX12 500HP with EVS4000 transmission. 2016 EPA Compliant. | 1 |

| SECONDARY BRAKING | | |
|---|---|---|
| 1125-0002 | Jacobs engine compression brake. | 1 |
| 1125-0023 | Transmission to seek second gear when Jacobs engine brake or Telma retarder is engaged. N/A with Trans retarder. | 1 |

| COOLING PACKAGE | | |
|---|---|---|
| 1800-0013 | Cooling system for use with Cyclone II X, Typhoon X, and Quest chassis. For use with 2010 / 2013 / 2016 EPA engines. Includes coolant recovery system. | 1 |

| FUEL SYSTEMS | | |
|---|---|---|
| 1350-0004 | Fuel system 50 gallon saddle tanks. | 1 |
| 1350-0011 | Fuel pump electric w/re-prime. | 1 |
| 1350-0012-670 | Fuel shut-off valve. Location: one (1) inlet side of OEM fuel filter. | 1 |
| 1350-0022 | Fuel line hose rubber. | 1 |

| ALTERNATOR | | |
|---|---|---|
| 1700-0005 | Alternator Leece Neville 320 amp. 320 amp SAE/275 amp NFPA. | 1 |

| BATTERIES | | |
|---|---|---|
| 1400-0002 | Battery four group 31 1000 CCA. | 1 |

| CHASSIS OPTIONS | | |
|---|---|---|
| 1680-0005 | Thermatic fan clutch. | 1 |
| 1680-0007 | Drivelines 1810. Required on 1550 lb/ft torque or greater engines. | 1 |
| 1680-0008 | Tow eyes front painted below bumper/cab (PR). | 1 |
| 1680-0012 | Tow eyes rear frame painted. | 1 |
| 1680-0017 | Hotshift PTO. | 1 |
| 1680-0188 | Aerial hydraulics installed on bottom port of EVS4000/4500 transmission (to allow for flat rear cab floor). Requires drive through hyd pump option (6150-0015) on aerials with hyd generator. | 1 |
| 1680-0250-M58 | Diesel Exhaust Fluid (DEF) 5 gallon tank for 2013 / 2016 EPA engines. Location: left side below rear of cab. | 1 |
| 1680-0284 | Radiator mounted power steering cooler. | 1 |

| CAB MODEL | | |
|---|---|---|
| 1520-0008 | Cyclone II X medium cab with 58" CA | 1 |

| CAB ROOF TYPE | | |
|---|---|---|
| 1615-0004 | Cab roof to be "flat" with trough for waterway. Required with HM100 (with waterway), HP100 (all), CR100/92 Pltfm (SdStckr and W/O/P) or HP/HPS100 Pltfrm (all). | 1 |

| CAB BADGE PACKAGE | | |
|---|---|---|
| 1610-0000 | Cab and body to have applicable E-ONE logos. | 1 |

| CAB DOOR OPTIONS | | |
|---|---|---|
| 1550-0003 | Rear crew cab doors in the medium position. | 1 |

| | | |
|---|---|---|
| 1550-0005 | Driver and officer cab door windows. Include forward vent windows. | 1 |
| 1550-0011 | Rear crew cab door windows. Includes manual roll-down actuation. Not available on Typhoon or CII with paddle style door latching. | 1 |
| 1550-0016 | Cab door panels ABS. | 1 |
| 1550-0025 | All cab doors shall have "L" style exterior latches. | 1 |
| 1550-0027 | Front cab door windows to have manual actuation. | 1 |
| 1550-0037-659 | (4) Incandescent cab step area lighting. Locate each light in on each cab door in the inboard position. Lights to be switched with door ajar. | 1 |
| 1550-0044 | All cab door kick plates to be made from diamond plate aluminum. | 1 |
| 1550-0059-000-G6 | Reflective Red/Lemon Yellow printed striping positioned in the "A" formation located on the cab door panels. | 1 |
| 1550-0077 | Interior cab door locks - manual. Will have manual actuation from each respective door. Includes barrel style key lock on each exterior cab door. | 1 |
| 1550-0084 | All cab exterior access doors to have 1250 keyed locks. | 1 |

| MIRRORS | | |
|---|---|---|
| 1670-0003 | Velvac 2010 mirrors. Door mounted west coast style with remote control and heat. | 1 |

| MISC EXTERIOR CAB OPTIONS | | |
|---|---|---|
| 1550-0020 | Windows cab side fixed driver's side. | 1 |
| 1550-0033 | Windows cab side fixed officer's side. | 1 |
| 1675-0022 | Pair of 18" handrails located just behind driver and officer front door one each side. | 1 |
| 1675-0023 | Pair of 18" handrails located just behind driver and officer rear door (ALS doors if equipped) one each side. | 1 |
| 1675-0030 | Mud flaps, front, black with E-ONE logo. | 1 |
| 1675-0047 | Rear cab wall to be 3/16" aluminum diamond plate. | 1 |
| 1675-0201 | Large radius cab wheel well. Includes bolt-on adjustable wheel well trim. | 1 |
| 1675-0202 | Mounting plate for battery charger receptacle, indicator and air inlet (if applicable). Plate to be removable brushed stainless steel. | 1 |

| HVAC | | |
|---|---|---|
| 1515-0018 | Air conditioning for the Typhoon X, CII X and Quest with roof top mounted condenser. | 1 |
| 1515-0053 | Controls for heating and air conditioning shall be located in the center dash area. (Lower area on Typhoon and CII with severe duty dash) | 1 |

| SEATS | | |
|---|---|---|
| 1510-0003 | Seats, Inc. brand 911 cab seats. | 1 |
| 1510-0007 | Seat cover material vinyl. | 1 |
| 1510-0008 | Seat color gray. | 1 |
| 1510-0035-147 | Universal air pack bottle bracket (EA). Location: officer's seat. | 1 |
| 1510-0035-148 | Universal air pack bottle bracket (EA). Location: rear facing driver's side. | 1 |
| 1510-0035-151 | Universal air pack bottle bracket (EA). Location: inboard driver's side rear wall. | 1 |
| 1510-0035-152 | Universal air pack bottle bracket (EA). Location: inboard officer's side rear wall. | 1 |
| 1510-0035-215 | Universal air pack bottle bracket (EA). Location: rear facing officer's side. | 1 |
| 1510-0038 | Driver seat 911 air ride. | 1 |
| 1510-0042 | Officer seat to be 911 fixed SCBA. | 1 |
| 1510-0050 | Rear facing 911 seat with SCBA driver's side. | 1 |
| 1510-0053 | Rear facing 911 seat with SCBA officer's side. | 1 |
| 1510-0062 | Two man bench centered on rear wall with 911 SCBA backs. Includes angled corners. | 1 |
| 1685-0033 | Seating capacity tag of six occupants. | 1 |

| MISC INTERIOR CAB OPTIONS | | |
|---|---|---|
| 1685-0000 | Cab interior gray. Does not include engine cover or seat color. | 1 |
| 1685-0005 | Lexan sun visors, driver and officer's side overhead. | 1 |
| 1685-0168 | ABS Dash package. Includes center and officer side dash, lower kick panels and "A" post covers. | 1 |
| 1685-0187 | Severe duty engine cover, molded polyurethane. | 1 |

| CAB ELECTRICAL OPTIONS |
|---|

| | | |
|---|---|---|
| 1750-0013-172 | Turn signal Whelen 600 LED amber arrow pair located upper headlight bezel. | 1 |
| 1750-0024-179-04 | Auto-Eject receptacle inlet 20 amp located outside driver's door next to handrail with a Yellow cover. | 1 |
| 1750-0029 | Switch horn button two position DOT/air horn. | 1 |
| 1750-0046-195 | Cab Headlights. Position: lower. | 1 |
| 1750-0072-593 | 12 VDC (or 24VDC) electrical outlet in the cab wired battery hot. Location: officer side dash. | 2 |
| 1750-0075 | English dominant main cab gauge cluster. | 1 |
| 1750-0158 | Dome Lts Red/White LED. Package includes two lights mounted in the front and two mounted in the rear of the cab. White light wired through door and light assembly switch. Red light through light assembly switch. | 1 |
| 1750-0198-A31 | Battery charger to be located behind driver's seat. | 1 |
| 1750-0343 | Battery charger E-ONE LPC 20. 120 volt inlet, 20 amp output. | 1 |
| 1750-0435 | Halogen cab headlights. TyphoonX, CIIX and QST2 only. | 1 |
| 1750-0449 | Momentary DPF regeneration override switch. | 1 |
| BODY SPEC | | |
| 3090-0000 | Body Specs - SideStacker aerial with tandem axle. Includes left rear staircase with pocket style drop down step. | 1 |
| BODY COMPT REAR | | |
| 3110-0360 | Rear of body to have un-painted smooth plate overlay style body panels to facilitate rear body striping. | 1 |
| AERIAL BODY OPTIONS | | |
| 3310-0002 | Compartments driver side CR100/95 platform SideStacker with 300g tank. Includes rescue style compartments. | 1 |
| 3310-0014 | Compartments officer side CR100/CR137/95 platform SideStacker with 300g tank. Includes rescue style extended height compartments ahead of wheel well with extended hosebed. | 1 |
| 3310-0032 | Recessed tubes for (6) pike poles. Not available on HP75 SideStacker. | 1 |
| 3310-0050 | Crosslay triple 5.5" wide single stack to hold up to 200' of 2.0" DJ (each) or 150'-200' 2.5" DJ (each). Includes storage pan to rear of crosslays | 1 |
| 3310-0069 | Rear ladder tunnel doors. Vertically hinged smooth plate to match rear body finish. | 1 |
| 3310-0162 | Jack leg opening covers diamond plate (4) sets. Includes diamond plate outrigger covers and fixed diamond plate filler panels. HM100/110 requires surface mount warning lights. | 1 |
| 3310-0309 | Auxiliary jack pad 26X26 (4) with 20 degree formed handle. Includes (4) mounting brackets. | 1 |
| DOORS | | |
| 3300-0007-017 | Door single vertical hinged painted. Location(s): R3 | 1 |
| 3300-0011-005 | Door single horizontal hinged lift-up box pan configuration painted. Location(s): L3 | 1 |
| 3300-0011-006 | Door single horizontal hinged lift-up box pan configuration painted. Location(s): L4 | 1 |
| 3300-0017-003 | Door roll up short (up to 45") with satin finish ROM. Location(s): L1. | 1 |
| 3300-0017-007 | Door roll up short (up to 45") with satin finish ROM. Location(s): L5. | 1 |
| 3300-0019-004 | Door roll up tall (greater than 45") with satin finish ROM. Location(s): L2. | 1 |
| 3300-0019-008 | Door roll up tall (greater than 45") with satin finish ROM. Location(s): L6. | 1 |
| 3300-0019-015 | Door roll up tall (greater than 45") with satin finish ROM. Location(s): R1. | 1 |
| 3300-0019-016 | Door roll up tall (greater than 45") with satin finish ROM. Location(s): R2. | 1 |
| 3300-0164-018 | Door double vertical hinged w/rotary latches - painted . Location(s): R4 | 1 |
| SHELVES | | |
| 3370-0052-004 | Adjustable shelf (J-Style) for non-transverse compartments 16" or greater in depth. Location: L2. | 1 |
| 3370-0052-083 | Adjustable shelf (J-Style) for non-transverse compartments 16" or greater in depth. Location: L6 lower. | 1 |
| 3370-0052-087 | Adjustable shelf (J-Style) for non-transverse compartments 16" or greater in depth. Location: R2 lower. | 1 |
| 3370-0053-069 | Adjustable shelf (C-Style) for non-transverse compartments up to 15.99" in depth. Location: L1 lower. | 1 |

| | | |
|---|---|---|
| 3370-0053-073 | Adjustable shelf (C-Style) for non-transverse compartments up to 15.99" in depth. Location: R1 lower. | 1 |
| 3370-0053-081 | Adjustable shelf (C-Style) for non-transverse compartments up to 15.99" in depth. Location: L5 lower. | 1 |
| 3370-0054-004 | Tracks for adjustable shelf and/or adjustable tray in compartments 16" or greater in depth. Location: L2. | 1 |
| 3370-0054-083 | Tracks for adjustable shelf and/or adjustable tray in compartments 16" or greater in depth. Location: L6 lower. | 1 |
| 3370-0054-087 | Tracks for adjustable shelf and/or adjustable tray in compartments 16" or greater in depth. Location: R2 lower. | 1 |
| 3370-0055-069 | Tracks for adjustable shelf in shallow compartments up to 15.99" deep. Location: L1 lower. | 1 |
| 3370-0055-073 | Tracks for adjustable shelf in shallow compartments up to 15.99" deep. Location: R1 lower. | 1 |
| 3370-0055-081 | Tracks for adjustable shelf in shallow compartments up to 15.99" deep. Location: L5 lower. | 1 |
| COVERS | | |
| 3305-0007-000-02 | Vinyl Red hose bed cover with attached rear flap(s). | 1 |
| 3305-0008-000-02 | Vinyl Red crosslay cover with attached side flaps. | 1 |
| PUMP PANELS | | |
| 3134-0016 | Stainless steel driver and officer side pump panels. | 1 |
| 3134-0064 | The gauge panel(s) on the driver side of the Side Mount module to be hinged upward. Panel(s) to include (2) mechanical/pneumatic (as applicable to panel size) hold opens and latches. | 1 |
| 3134-0146 | Officer side upper pump access panel to be horizontally hinged with stainless steel door. Includes (2) push button latches and (1) hold open device. | 1 |
| MISC PUMP PANEL OPTIONS | | |
| 4460-0003 | Pump panel tags color coded per NFPA compliance. | 1 |
| WATER TANK | | |
| 4010-0195 | 300 gallon "T" water tank. UPF Poly III blue fill tower. | 1 |
| TANK PLUMBING | | |
| 4450-0010 | 2" tank fill Akron manual valve. | 1 |
| 4450-0022 | 3" tank to pump Akron manual valve. | 1 |
| LADDER STORAGE / RACKS | | |
| 3365-0013-607 | Center mounted ladder tunnel. Ladder rack to hold: (2)PEL-35, PEL-28, PEL-24, PRL-20, PRL-16 and FL-10 (with rubber block feet). | 1 |
| HANDRAILS / STEPS | | |
| 3330-0002-050 | Slide-out platform, rollerless. Includes chrome grab handle centered on the front face of the platform (includes hand rail as applicable). Located below driver side pump panel. | 1 |
| 3330-0279-060 | Innovative Controls dual lighted LED folding step. Location: officer side front compartment face. Each location requires a minimum of (1) handrail per NFPA. | 3 |
| 3330-0279-062 | Innovative Controls dual lighted LED folding step. Location: driver side front compartment face. Each location requires a minimum of (1) handrail per NFPA. | 3 |
| MISC BODY OPTIONS | | |
| 3340-0093 | Mud flaps, rear, black with E-ONE logo. | 1 |
| 3340-0107 | Diamond plate tandem axle wheel well. Includes bolt-on composite wheel well liners and fenderettes. | 1 |
| 3340-0270 | The painted aerial body side panels shall be smooth / flush. Applies to SideStacker HB side, panels next to water tank on MM, and upper body sides on RLP. | 1 |
| SCBA BOTTLE STORAGE | | |
| 3320-0009 | SCBA Bottle Storage. (8) Cast Product SCBA bottle storage with gasketed doors. (4) each side in rear | 1 |

| | | |
|---|---|---|
| | wheel well area. | |
| 3320-0100 | Strap(s), loop style to retain SCBA bottle(s). Locate one per bottle in each exterior storage compartment. | 8 |
| **PUMPS** | | |
| 4005-0031 | Rating 1500 GPM. | 1 |
| 4005-0196 | Hale QMAX 1000-2250 GPM single stage pump. Requires primer option. | 1 |
| **PUMP CERTIFICATION** | | |
| 4475-0000 | Pump certification 750-2250 GPM | 1 |
| **PUMP OPTIONS** | | |
| 4015-0008 | Zinc anodes for Hale pump (PR), (1) discharge side and (1) intake side. | 1 |
| 4015-0022 | Mechanical pump seal - Hale. | 1 |
| 4015-0052-198 | Steamers to be Flush. Location: driver's side. | 1 |
| 4015-0052-199 | Steamers to be Flush. Location: officer's side. | 1 |
| 4015-0073 | Manual operated master pump drain. The master drain shall be clearly marked and placed in accessible location below running board on driver side or L1 compartment. | 1 |
| 4015-0210 | Pump cooler with Innovative Control 1/4 turn valve with "T" handle and label. | 1 |
| 4015-0238 | Hale electric primer (oil-less). | 1 |
| **INTAKES** | | |
| 4440-0005 | 2.5" Left Intake Akron Manual Valve. | 1 |
| **INTAKE OPTIONS** | | |
| 4445-0009 | Intake relief valve, Akron. | 1 |
| **DISCHARGES AND PRECONNECTS** | | |
| 4415-0012-654 | 1.5" Crosslay with Akron manual valve. Location: crosslay 1 & 2. | 2 |
| 4415-0014-581 | 2.5" Left Pump Panel Discharge Akron Manual Valve. Location: left side discharge 1. | 1 |
| 4415-0014-582 | 2.5" Left Pump Panel Discharge Akron Manual Valve. Location: left side discharge 2. | 1 |
| 4415-0016-584 | 2.5" Right Pump Panel Discharge Akron Manual Valve. Location: right side discharge 2. | 1 |
| 4415-0051 | 4" Waterway Discharge with 3" Akron Manual Valve. | 1 |
| 4415-0054-583 | 4" Right Pump Panel Discharge with 3" Akron Manual Valve (Waterous pumps noted location to be forward lower port). Location: right side discharge 1. | 1 |
| 4415-0058-655 | 2.5" Crosslay Akron Manual Valve. Location: crosslay 3. | 1 |
| **DISCHARGE OPTIONS** | | |
| 4417-0175 | Innovative Controls push/pull valve controls with locking T handles. | 1 |
| 4417-0176 | Innovative Controls 3/4" bleeder/drain valve include lift lever with ergonomic grip. | 8 |
| 4417-0185 | Innovative Controls discharge and intake bezels with integral color code and verbiage for side mount pump panel. | 1 |
| **PRESSURE GOVERNORS** | | |
| 4465-0011 | Class 1 TPG pressure governor. Includes, water, oil, volt and tachometer. | 1 |
| **GAUGES** | | |
| 4435-0083 | Innovative Controls 10 LED SL series water tank level gauge. On pump panel. | 1 |
| 4435-0246 | 2.5" Innovative Controls stainless steel case pressure gauge (0-400) with color code bezel. | 8 |
| 4435-0247 | 4" Innovative Controls stainless steel case master pressure gauges with bezel. Intake 30-0-400, and discharge 0-400. | 1 |
| **ELECTRICAL SYSTEMS** | | |
| 5010-0013-Y83 | Vehicle data recorder - 2009 / 2016 NFPA compliant. Includes occupant detection with display. Display location: inboard on driver's side overhead console. | 1 |
| 5010-0039 | V-MUX Electrical system for aerials. | 1 |
| 5010-0059-339 | VFD Text display for V-MUX electrical system. Location: center of dash. | 1 |

| | | |
|---|---|---|
| **LIGHT BARS** | | |
| 5300-0506-000-4V | Light bar LED color: Red/White with clear lenses | 1 |
| 5300-0515 | Whelen MKEZ7 1.5" standard mount for mini front light bars (4). | 1 |
| 5300-0524-034 | Whelen F4 Mini-Freedom LED light bars (PR) 21.5" with 5 LEDs' in each bar. Location: front cab corners. | 1 |
| **WARNING LIGHT PACKAGES** | | |
| 5550-0059-538 | Whelen Super LED lower level warning light package. Includes (8) red 600 LED light heads and (2) red 500 LED light heads w/chrome flanges. Locate side facing lights: at forward most position, in rear wheel well offset to front, and side facing at rear of body in rubrail if equipped. | 1 |
| **WARNING LIGHTS** | | |
| 5600-0078-290-06 | Whelen Super LED beacon (PR) model L31H with Red domes. Location above L2/R2 compartments offset rearward to supplement upper rear warnings. | 1 |
| 5600-0078-479-06 | Whelen Super LED beacon (PR) model L31H with Red domes. Location rear upper body on aerial style brackets. | 1 |
| 5600-0105-170 | Hazard (door ajar) light 2" LED. Location: center overhead. | 1 |
| **SIRENS** | | |
| 5500-0015 | Whelen model 295SLSA1 siren with microphone (replaced 295HFSA1). | 1 |
| 5500-0024-170 | The electronic siren control is to be located on the center overhead. | 1 |
| **SPEAKERS** | | |
| 5510-0029-209 | Speaker, Federal Signal Dynamax ES100 with "E-ONE" grille through bumper. Location: driver side front bumper. | 1 |
| **DOT LIGHTING** | | |
| 5150-0006 | Whelen 600 series LED horizontal mount tail lights. Includes LED stop/tail, arrow turn and halogen back-up lights with horizontal Cast 3 housing and weatherproof connectors. | 1 |
| 5150-0017 | License plate light LED with chrome housing located at the rear of the body. | 1 |
| 5150-0026 | Marker light LED body/cab package. E-ONE custom cab with aerial ladder, Mid-Mount platform or Bronto bodies only. | 1 |
| **LIGHTS - COMPARTMENT, STEP & GROUND** | | |
| 5380-0032 | Ground light package LED - large. | 1 |
| 5380-0036 | Step light package body LED - small. | 1 |
| 5380-0136 | Compartment light package Amdor Luma-Bar LED for large bodies. Includes one light per compartment (two if transverse). | 1 |
| **LIGHTS - DECK AND SCENE** | | |
| 5390-0007 | Deck/scene light circuit wiring through chassis reverse. Requires rear deck or scene light. | 1 |
| 5390-0076 | Hose bed light Truck-Lite LED model 81380. Locate at front of hose bed. Switched with work light switch in cab. | 1 |
| 5390-0102 | Crosslay light Truck-Lite LED model 81380. Locate to rear of crosslay (SM) and forward of crosslay (TM as applicable). Switched with work light switch in cab. | 1 |
| 5390-0152-444 | Whelen 600 series gradient Super LED surface mounted scene lights (PR) with weatherproof connectors. Switch in cab (driver and officer side lights switched separately). Locate (1) each side over rear ladder tunnel. | 1 |
| **LIGHTS - NON-WARNING** | | |
| 5400-0003 | Engine compartment light (EA). | 1 |
| 5400-0010 | Incandescent pump compartment light (EA). | 1 |
| 5400-0054 | Spotlight Specialty 2150 hand held located on officer's side of cab dash w/12V receptacle. | 1 |
| 5400-0092 | Weldon pump panel LED light package with (3) lights per side pump panel. Pump panels over 45" may require additional lights. Side mount only. | 1 |
| **CONTROLS / SWITCHES** | | |
| 5100-0000-199 | Foot switch to control air horns located officer's side. | 1 |
| 5100-0007-198 | Foot switch to control electronic siren located driver's side. | 1 |

| | | |
|---|---|---|
| **CAMERAS / INTERCOM** | | |
| 5350-0156 | FRC ACT 2-way aerial intercom. | 1 |
| **MISC ELECTRICAL** | | |
| 1750-0082-762 | 12V power distribution module. Includes (6) battery hot and (6) switched hot circuits. 100 amps max (IATS). Location: behind officer's seat. | 1 |
| 5110-0017 | Back-up alarm 97 dB. | 1 |
| **LIGHTS - QUARTZ** | | |
| 5450-0144-063 | Fire Research, FRC Evolution 12V LED scene light model FCA530-V15-SW-H with external push-up pole. Includes switch in cab accessible to driver. Location: officer side back of cab. | 1 |
| 5450-0144-064 | Fire Research, FRC Evolution 12V LED scene light model FCA530-V15-SW-H with external push-up pole. Includes switch in cab accessible to driver. Location: driver side back of cab. | 1 |
| **AERIAL MODEL** | | |
| 6100-0034 | Ladder CR137 SideStacker with waterway to 110'. Includes left side console with cover, turntable mansaver bars, split steps at tip and jack leg flood lights. | 1 |
| **AERIAL HYDRAULIC SYSTEM OPTIONS** | | |
| 6150-0003-216 | Gauge aerial hydraulic oil level. Electronic display to be located on pump operator's panel. | 1 |
| **AERIAL CONTROLS** | | |
| 6850-0026 | Direct hydraulic aerial control system. | 1 |
| **MONITORS** | | |
| 6300-0002 | Monitor Akron electric 1000 GPM for ladder. Includes tip and base controls. | 1 |
| 6300-0017 | Monitor painted silver from OEM. | 1 |
| **AERIAL WARNING LIGHTS** | | |
| 6550-0002 | Outrigger warning lights (4) LED. Truck-Lite model 91R. | 1 |
| **AERIAL LIGHTING** | | |
| 6560-0032 | Locate spot, flood and /or quartz lights on ladder fly section as far back from tip as possible. | 1 |
| 6560-0104-232 | Light Whelen Pioneer Plus 12V model PFP1P1 with PBAPEDD pedestal mount. Switched at light head and base console. Location(s): right side tip. | 1 |
| 6560-0127 | FireTech model FT-WL3500-FT-W LED flood/spot light. Includes hardwired switch on turntable console. Location: left and right side of base section. | 1 |
| **WATERWAY OPTIONS** | | |
| 6350-0005 | Rear 4" NST waterway inlet for rear mounted aerials. Includes chrome cap. | 1 |
| 6350-0010 | Flowminder with single readout and totalizer for the aerial waterway to be located at the aerial control station. | 1 |
| 6350-0067 | 2.5" Innovative Controls stainless steel case pressure gauge (0-400) with color code bezel. Locate next to waterway inlet. | 1 |
| **AERIAL EQUIPMENT** | | |
| 6500-0011-139 | Pike pole tube for 6' pole on ladder. Location: right side fly section. | 1 |
| 6500-0019-138 | Axe bracket mounted on aerial. For use with a 6 lb. axe only. Location: left side fly section. | 1 |
| **AERIAL LADDER BRACKETS** | | |
| 6600-0004-250 | Lift out style roof ladder bracket. Locate outside base section for a PRL-16 on left side of base section. Available on 95RM, 110, CR100 and HM100. | 1 |
| **SIGN PLATES** | | |
| 6750-0002-000-39 | Aerial sign plates 22 x 144 (PR). Available on HM100, HM110, 95, CR100 and CR137 only. Does not include lettering. Color: Job Color. | 1 |

| | | |
|---|---|---|
| **AERIAL TESTING** | | |
| 6900-0000 | Aerial flow test - 3rd party. | 1 |
| 6900-0007 | Aerial 2016 NFPA Certification. | 1 |
| **ELBOWS** | | |
| 7400-0004 | Elbow 30 degree chrome swivel w/2.5"FNST x 2.5"MNST. | 3 |
| **ADAPTERS** | | |
| 7200-0026 | Swivel Connector 4" FNST x 5" Storz 30 Deg Elbow with Tethered Cap. | 1 |
| **HAND TOOLS** | | |
| 7600-0005 | Pike Pole Fiberglass 6'. | 3 |
| 7600-0007 | Pike Pole Fiberglass 10'. | 2 |
| 7600-0008 | Pike Pole Fiberglass 12'. | 2 |
| **GROUND LADDERS** | | |
| 7800-0010 | Alco-Lite PRL-16' roof ladder. | 2 |
| 7800-0016 | Alco-Lite PEL-24' 2-section extension ladder. | 1 |
| 7800-0021 | Alco-Lite PEL-28' extension ladder. | 1 |
| 7800-0024 | Alco-Lite PEL-35' extension ladder. | 2 |
| 7800-0032 | Alco-Lite FL-10, 10' folding ladder w/safety shoes. | 1 |
| 7800-0038 | Alco-Lite PRL-20' roof ladder. | 1 |
| **MISC LOOSE EQUIPMENT** | | |
| 7600-0016 | Wheel chocks 44" NFPA compliant, pair (PR) of Zico SAC-44. Up to 44" diameter tires. Includes mounting brackets. | 4 |
| 7900-0014 | DOT Required Drive Away Kit - Kit includes three (3) triangular warning reflectors with carrying case. This kit is for the end user and is to remain with the truck. | 1 |
| **EXTERIOR PAINT** | | |
| 8100-0071 | Undercoating E-ONE. | 1 |
| 8100-0084 | All applicable pump/pre-connect application modules are to have a job color finish. Includes upper and lower pump modules, crosswalk module and/or speedlay/pre-connect module (as applicable). Rear mounted body/pump module to be painted job color. | 1 |
| 8100-0116 | Rear body surface to have a sanded finish (not painted job color). Includes hinged doors that do not have discrete sales codes and removable panels. | 1 |
| 8100-0176-000-17 | Paint E-ONE chassis cab - Sikkens paint. Color: FLNA3225E-1 Red. | 1 |
| 8100-0183-000-17 | Paint Body - Large - For Aerials, T/A Tankers/Wetsides, Rear Mounts and Rescues. Sikkens paint. Color: FLNA3225E-1 Red. | 1 |
| 8100-0354 | Paint lift cylinders, extension cylinders and upper turntable steelwork primary job color (does not apply to TT deck). | 1 |
| **INTERIOR PAINT** | | |
| 8150-0011 | The interior of the cab to be painted Zolatone gray. | 1 |
| **STRIPING** | | |
| 8200-0016 | White reflective tape on (4) outriggers. | 1 |
| 8300-0002-334-12 | NFPA Scotchlite Stripe - 4" wide and straight on front/sides of cab and sides/rear of body. Color: White. Location: bottom of stripe flush with top of bumper and straight back. | 1 |
| 8300-0042 | White rubrail scotchlite insert. | 1 |
| 8300-0123-000-72 | Chevron "A" style 6" printed pattern NFPA Scotchlite striping. Provided to driver and officer rear compartment face, smooth plate panels and/or doors outboard and above the center rear compartment opening and the vertical hosebed extrusions (terminate just above the upper hand rail stanchion). The vertical and horizontal extrusions inboard of the vertical hose bed extrusions shall remain visible with a sanded finish. Colors to be Yellow/Red. | 1 |
| 8300-0313 | Yellow line to indicate designated standing / walking areas above 48" high in compliance with 2016 NFPA 1901. Line to be 1" wide. Steps, ladders and areas with a railing or structure at least 12" high are excluded from requiring the line. | 1 |
| **GRAPHICS** | | |

| | | |
|---|---|---|
| 8400-0022 | Logo E-ONE (PR) on aerial lift cylinder. Logo to be black and white reflective material approx 14" long located midway along outward surface of cylinder. | 1 |
| WARRANTY / STANDARD & EXTENDED | | |
| 9100-0000 | Standard 1 Year Warranty. | 1 |
| 9100-0003 | Lifetime Frame Warranty. | 1 |
| 9100-0004 | 10 Year/100,000 Mile Structural Warranty for Alum Cab / Body - Statement of Warranty. | 1 |
| 9100-0005 | 10 Year Stainless Steel Plumbing Warranty - Statement of Warranty. | 1 |
| 9100-0007 | 20 Year Aerial Device Structural Warranty - Integrity Limited Warranty. | 1 |
| 9100-0019 | 10 Year Limited Paint and Perforation Warranty - For Sikkens Paint. | 1 |
| SUPPORT, DELIVERY, INSPECTIONS AND MANUALS | | |
| 9300-0000 | Vehicle familiarization aerial (Domestic). | 1 |
| 9300-0009 | Manuals, Operator and Service CD-ROM. | 1 |
| 9300-0016 | Approval Drawings-Standard. | 1 |
| 9300-0316 | Fire Apparatus Safety Guide published by FAMA, latest edition. | 1 |

PRICE - 2017 E-ONE CL137 AERIAL LADDER QUINT - CYCLONE CHASSIS - $926,594

# STATE OF OHIO TERM SCHEDULE

4200 SURFACE RD
COLUMBUS, OH 43228

*Quote No: 57493*

8/27/2016

Quote Rev:23 Drawing Rev:6

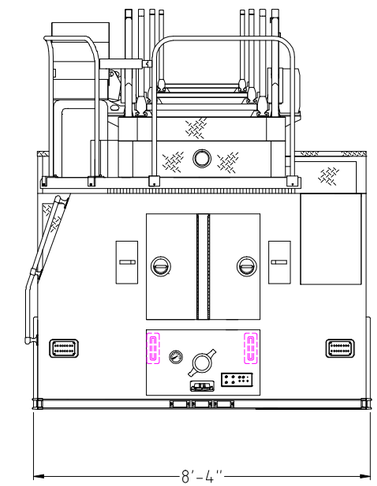


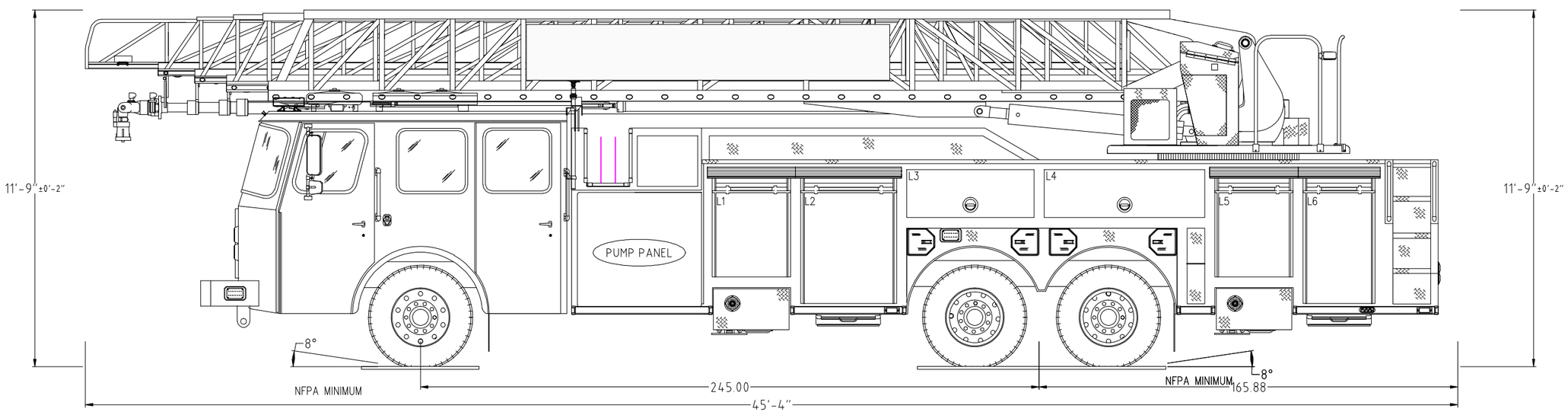


POWERED BY EZDRAW

Notice: This drawing provides a GENERAL REPRESENTATION of the vehicle configuration and should be used for evaluation purposes. The respective dimensions shown,including overall height and length, are estimates and may vary due to manufacturing processes. All other items such as lighting and fixtures, plumbing, compartmentation, and other generally assembled details are shown for REFERENCE ONLY and may not be a direct reflection of the final truck configuration. In ALL situations where this drawing may conflict with the specifications, THE SPECIFICATIONS, AS REFLECTED IN THE APPROVED SHOP ORDER, SHALL PREVAIL. Unless otherwise specified, the proposed apparatus will be manufactured to the latest NFPA recommendations as well as other applicable federally regulated safety regulations. E-One reserves the right to engineer and incorporate design improvements and changes without notice, while adhering to the intent of the specification.

| | |
|---|---|
| 1500 GPM PUMP<br>0 TOTAL VOLUME<br>0 TOTAL FOAM | HOSE LOADS : |

| | OPENING | | INTERIOR DIMENSIONS | | | | |
|---|---|---|---|---|---|---|---|
| COMPT. | WIDTH | HEIGHT | WIDTH | LOWER HEIGHT | LOWER DEPTH | UPPER HEIGHT | UPPER DEPTH |
| L1 | 29 | 34.5 | 31 | 42.5 | 14 | 34.5 | 19 |
| L2 | 36 | 45 | 38 | 53 | 26 | 45 | 26 |
| L3 | 50.5 | 19 | 50.5 | N/A | N/A | 19 | 26 |
| L4 | 63.5 | 19 | 63.5 | N/A | N/A | 19 | 20 |
| L5 | 29 | 34.5 | 31 | 42.5 | 14 | 34.5 | 18 |
| L6 | 26.5 | 45 | 28.5 | 53 | 22 | 45 | 18 |
| R1 | 29 | 47 | 31 | 55 | 14 | 47 | 19 |
| R2 | 36 | 57.5 | 38 | 65.5 | 26 | 57.5 | 19 |
| R3 | 31 | 19.5 | 31 | 30 | 14 | N/A | N/A |
| R4 | 49.5 | 30 | 49.5 | 30 | 22 | N/A | N/A |

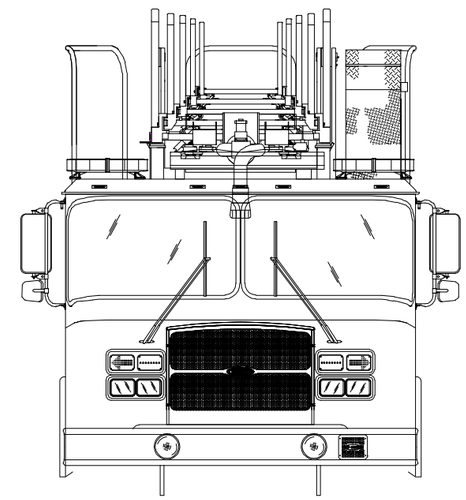

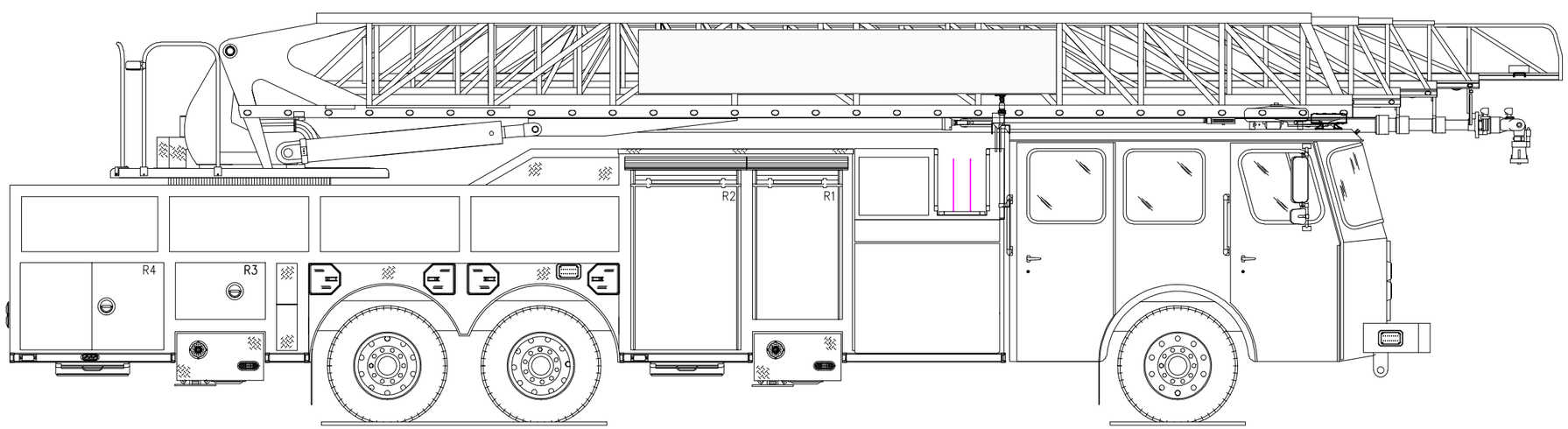


POWERED BY EZDRAW

Fire Apparatus Quotation for:
STATE OF OHIO TERM SCHEDULE

Quotation Number: 57494 Rev: 30

Unit Description: AERM-CYC2-100P
Quote Description: Aerial Rear Mount, Cyclone II, 100 Foot Platform

| Salescode | Extended Description | Qty |
|---|---|---|
| **TESTING COMPLIANCE STANDARD** | | |
| 1001-0065 | The E-ONE supplied components of the vehicle shall meet the requirements of NFPA 1901, 2016 edition. | 1 |
| 3090-0001 | Hosebed hoseload allowance on the apparatus shall be 1000 lbs. | 1 |
| 3090-0002 | OAH. Unit has no overall height restrictions. | 1 |
| 3090-0004 | OAL. Unit has no overall length restrictions. | 1 |
| 3340-1137-12C | Equipment allowance on the apparatus shall be 2500 lbs. This allowance is in addition to the weight of the hoses and ground ladders listed in the shop order as applicable. | 1 |
| **BUMPERS** | | |
| 1160-0000 | Bumper 10" stainless steel. | 1 |
| 1160-0008 | 3/16" Front Bumper Gravel Shield. | 1 |
| 1160-0013 | 16" Front Bumper Gravel Shield Extension. | 1 |
| **FRAME ASSEMBLY** | | |
| 1250-0014 | Frame - Torque box for HP100 platform. | 1 |
| **AXLE OPTIONS** | | |
| 1025-0002 | Dana 22I 22,800 lb. front axle. | 1 |
| 1025-0023 | Meritor RT-50-160 rear tandem axle 54,000 lb. capacity. | 1 |
| 1025-0028 | Koni shock absorbers for front axle - adjustable. | 1 |
| **SUSPENSIONS** | | |
| 1070-0015 | Ridewell Dynalastic rear suspension (40-54K) rated equal to the capacity of the axles. | 1 |
| **WHEEL OPTIONS** | | |
| 1050-0007 | Front axle wheel trim kit. Includes stainless steel lug nut covers (chrome plated plastic if applicable) and center cap with E-ONE logo. Note: Center cap will have an inspection port IPO a logo if equipped with Stemco oil seals. | 1 |
| 1050-0009 | Rear axle (tandem) wheel trim kit. Includes stainless steel lug nut covers (chrome plated plastic if applicable) and center caps with E-ONE logo. E-ONE custom chassis w/steel wheels will have chrome plated plastic lug covers. | 1 |
| 1050-0044 | Accuride aluminum wheels for front axle (2). | 1 |
| 1050-0046 | Accuride aluminum wheels for rear axles (8). | 1 |
| **TIRE OPTIONS** | | |
| 1060-0022 | Eight Michelin 12R rear tires with XDN2 mud and snow tread. | 1 |
| 1060-0046 | Two Michelin 425 tires model XFE for front axle. | 1 |
| 1060-0119 | RWC AirGuard LED tire pressure monitoring valve stem caps (10) for tandem rear axle applications. | 1 |
| **BRAKE SYSTEMS** | | |
| 1100-0006 | Parking brake release mounted on the driver's side lower dash. | 1 |
| 1100-0008 | Brake system air 6X4. | 1 |
| 1100-0014 | ArvinMeritor 16-1/2'' x 7'' S-cam brakes with cast brake drums for a tandem rear axle. | 1 |
| 1100-0026 | G4 Electronic Stability Control (6x4), Includes RSC and ATC. Not available on 6x6 or commercial chassis. | 1 |
| 1100-0031 | Dana ADB22X 17" disc brakes for front axle. | 1 |

| | | |
|---|---|---|
| **AIR SYSTEM OPTIONS** | | |
| 1110-0000-001 | Inlet for air system. Location: driver door jamb. | 1 |
| 1110-0002 | Air dryer Bendix AD-9. | 1 |
| 1110-0006 | Air lines nylon. | 1 |
| 1110-0026 | Air horns recessed in bumper (PR). | 1 |
| 1110-0027 | Isolated air tank. Includes pressure protection valve. | 1 |
| 1110-0043 | Auxiliary air tank to be plumbed to the following optional accessories (if equipped): Chassis air horns, brake system air outlet, air reel, light tower, air primer and or customer/dealer supplied pneumatic add-on(s). | 1 |
| **ENGINES & TRANSMISSIONS** | | |
| 1200-0017 | Push-button transmission shift selector. | 1 |
| 1200-0021 | TransSynd synthetic transmission fluid for EVS 4000. | 1 |
| 1200-0096 | Electronic speed limiting set at 60 MPH. | 1 |
| 1200-0317 | Eng/Trans Cummins ISX12 500HP with EVS4000 transmission. 2016 EPA Compliant. | 1 |
| **SECONDARY BRAKING** | | |
| 1125-0002 | Jacobs engine compression brake. | 1 |
| 1125-0023 | Transmission to seek second gear when Jacobs engine brake or Telma retarder is engaged. N/A with Trans retarder. | 1 |
| **COOLING PACKAGE** | | |
| 1800-0013 | Cooling system for use with Cyclone II X, Typhoon X, and Quest chassis. For use with 2010 / 2013 / 2016 EPA engines. Includes coolant recovery system. | 1 |
| **FUEL SYSTEMS** | | |
| 1350-0005 | Fuel system 65 gallons. | 1 |
| 1350-0011 | Fuel pump electric w/re-prime. | 1 |
| 1350-0012-670 | Fuel shut-off valve. Location: one (1) inlet side of OEM fuel filter. | 1 |
| 1350-0022 | Fuel line hose rubber. | 1 |
| **ALTERNATOR** | | |
| 1700-0005 | Alternator Leece Neville 320 amp. 320 amp SAE/275 amp NFPA. | 1 |
| **BATTERIES** | | |
| 1400-0002 | Battery four group 31 1000 CCA. | 1 |
| **CHASSIS OPTIONS** | | |
| 1680-0005 | Thermatic fan clutch. | 1 |
| 1680-0007 | Drivelines 1810. Required on 1550 lb/ft torque or greater engines. | 1 |
| 1680-0008 | Tow eyes front painted below bumper/cab (PR). | 1 |
| 1680-0012 | Tow eyes rear frame painted. | 1 |
| 1680-0017 | Hotshift PTO. | 1 |
| 1680-0188 | Aerial hydraulics installed on bottom port of EVS4000/4500 transmission (to allow for flat rear cab floor). Requires drive through hyd pump option (6150-0015) on aerials with hyd generator. | 1 |
| 1680-0250-M58 | Diesel Exhaust Fluid (DEF) 5 gallon tank for 2013 / 2016 EPA engines. Location: left side below rear of cab. | 1 |
| 1680-0284 | Radiator mounted power steering cooler. | 1 |
| **CAB MODEL** | | |
| 1520-0008 | Cyclone II X medium cab with 58" CA | 1 |
| **CAB ROOF TYPE** | | |
| 1615-0004 | Cab roof to be "flat" with trough for waterway. Required with HM100 (with waterway), HP100 (all), CR100/92 Pltfm (SdStckr and W/O/P) or HP/HPS100 Pltfrm (all). | 1 |
| **CAB BADGE PACKAGE** | | |
| 1610-0000 | Cab and body to have applicable E-ONE logos. | 1 |
| **CAB DOOR OPTIONS** | | |
| 1550-0003 | Rear crew cab doors in the medium position. | 1 |
| 1550-0005 | Driver and officer cab door windows. Include forward vent windows. | 1 |

| | | |
|---|---|---|
| 1550-0011 | Rear crew cab door windows. Includes manual roll-down actuation. Not available on Typhoon or CII with paddle style door latching. | 1 |
| 1550-0016 | Cab door panels ABS. | 1 |
| 1550-0025 | All cab doors shall have "L" style exterior latches. | 1 |
| 1550-0027 | Front cab door windows to have manual actuation. | 1 |
| 1550-0038-659 | (4) LED cab step area lighting. Locate each light on each cab door in the inboard position. Lights to be switched with door ajar. | 1 |
| 1550-0044 | All cab door kick plates to be made from diamond plate aluminum. | 1 |
| 1550-0059-000-G6 | Reflective Red/Lemon Yellow printed striping positioned in the "A" formation located on the cab door panels. | 1 |
| 1550-0077 | Interior cab door locks - manual. Will have manual actuation from each respective door. Includes barrel style key lock on each exterior cab door. | 1 |
| 1550-0084 | All cab exterior access doors to have 1250 keyed locks. | 1 |

| MIRRORS | | |
|---|---|---|
| 1670-0003 | Velvac 2010 mirrors. Door mounted west coast style with remote control and heat. | 1 |

| MISC EXTERIOR CAB OPTIONS | | |
|---|---|---|
| 1550-0020 | Windows cab side fixed driver's side. | 1 |
| 1550-0033 | Windows cab side fixed officer's side. | 1 |
| 1675-0022 | Pair of 18" handrails located just behind driver and officer front door one each side. | 1 |
| 1675-0023 | Pair of 18" handrails located just behind driver and officer rear door (ALS doors if equipped) one each side. | 1 |
| 1675-0030 | Mud flaps, front, black with E-ONE logo. | 1 |
| 1675-0047 | Rear cab wall to be 3/16" aluminum diamond plate. | 1 |
| 1675-0201 | Large radius cab wheel well. Includes bolt-on adjustable wheel well trim. | 1 |
| 1675-0202 | Mounting plate for battery charger receptacle, indicator and air inlet (if applicable). Plate to be removable brushed stainless steel. | 1 |

| HVAC | | |
|---|---|---|
| 1515-0018 | Air conditioning for the Typhoon X, CII X and Quest with roof top mounted condenser. | 1 |
| 1515-0053 | Controls for heating and air conditioning shall be located in the center dash area. (Lower area on Typhoon and CII with severe duty dash) | 1 |
| 1685-0057 | Heaters cab rear with covers (PR), and front heater with heat to the feet for the driver and officer. | 1 |

| SEATS | | |
|---|---|---|
| 1510-0003 | Seats, Inc. brand 911 cab seats. | 1 |
| 1510-0007 | Seat cover material vinyl. | 1 |
| 1510-0008 | Seat color gray. | 1 |
| 1510-0035-147 | Universal air pack bottle bracket (EA). Location: officer's seat. | 1 |
| 1510-0035-148 | Universal air pack bottle bracket (EA). Location: rear facing driver's side. | 1 |
| 1510-0035-151 | Universal air pack bottle bracket (EA). Location: inboard driver's side rear wall. | 1 |
| 1510-0035-152 | Universal air pack bottle bracket (EA). Location: inboard officer's side rear wall. | 1 |
| 1510-0035-215 | Universal air pack bottle bracket (EA). Location: rear facing officer's side. | 1 |
| 1510-0038 | Driver seat 911 air ride. | 1 |
| 1510-0042 | Officer seat to be 911 fixed SCBA. | 1 |
| 1510-0050 | Rear facing 911 seat with SCBA driver's side. | 1 |
| 1510-0053 | Rear facing 911 seat with SCBA officer's side. | 1 |
| 1510-0062 | Two man bench centered on rear wall with 911 SCBA backs. Includes angled corners. | 1 |
| 1685-0033 | Seating capacity tag of six occupants. | 1 |

| MISC INTERIOR CAB OPTIONS | | |
|---|---|---|
| 1685-0000 | Cab interior gray. Does not include engine cover or seat color. | 1 |
| 1685-0005 | Lexan sun visors, driver and officer's side overhead. | 1 |
| 1685-0168 | ABS Dash package. Includes center and officer side dash, lower kick panels and "A" post covers. | 1 |
| 1685-0187 | Severe duty engine cover, molded polyurethane. | 1 |

| CAB ELECTRICAL OPTIONS |
|---|

| | | |
|---|---|---|
| 1750-0013-172 | Turn signal Whelen 600 LED amber arrow pair located upper headlight bezel. | 1 |
| 1750-0024-179-04 | Auto-Eject receptacle inlet 20 amp located outside driver's door next to handrail with a Yellow cover. | 1 |
| 1750-0029 | Switch horn button two position DOT/air horn. | 1 |
| 1750-0046-195 | Cab Headlights. Position: lower. | 1 |
| 1750-0072-593 | 12 VDC (or 24VDC) electrical outlet in the cab wired battery hot. Location: officer side dash. | 2 |
| 1750-0075 | English dominant main cab gauge cluster. | 1 |
| 1750-0158 | Dome Lts Red/White LED. Package includes two lights mounted in the front and two mounted in the rear of the cab. White light wired through door and light assembly switch. Red light through light assembly switch. | 1 |
| 1750-0198-A31 | Battery charger to be located behind driver's seat. | 1 |
| 1750-0343 | Battery charger E-ONE LPC 20. 120 volt inlet, 20 amp output. | 1 |
| 1750-0435 | Halogen cab headlights. TyphoonX, CIIX and QST2 only. | 1 |
| 1750-0449 | Momentary DPF regeneration override switch. | 1 |
| BODY SPEC | | |
| 3090-0000 | Body Specs - SideStacker aerial with tandem axle. Includes left rear staircase with pocket style drop down step. | 1 |
| BODY COMPT REAR | | |
| 3110-0360 | Rear of body to have un-painted smooth plate overlay style body panels to facilitate rear body striping. | 1 |
| AERIAL BODY OPTIONS | | |
| 3310-0032 | Recessed tubes for (6) pike poles. Not available on HP75 SideStacker. | 1 |
| 3310-0050 | Crosslay triple 5.5" wide single stack to hold up to 200' of 2.0" DJ (each) or 150'-200' 2.5" DJ (each). Includes storage pan to rear of crosslays | 1 |
| 3310-0069 | Rear ladder tunnel doors. Vertically hinged smooth plate to match rear body finish. | 1 |
| 3310-0072 | Compartments driver side HP100 Platform SideStacker with 300g tank. Includes rescue style extended height compartments. The door on small compts next to rear outrigger to match wheelwell. | 1 |
| 3310-0073 | Compartments officer side HP100 Platform SideStacker with 300g tank. Includes rescue style extended height compartments ahead of wheel well with extended hosebed. | 1 |
| 3310-0075 | Upper dunnage area extension 34 x 58 diamond plate. | 1 |
| 3310-0162 | Jack leg opening covers diamond plate (4) sets. Includes diamond plate outrigger covers and fixed diamond plate filler panels. HM100/110 requires surface mount warning lights. | 1 |
| 3310-0310 | Auxiliary jack pad 26X26 (4) with 20 degree formed handle. Includes (2) double mounting brackets. | 1 |
| DOORS | | |
| 3300-0007-017 | Door single vertical hinged painted. Location(s): R3 | 1 |
| 3300-0007-018 | Door single vertical hinged painted. Location(s): R4 | 1 |
| 3300-0007-019 | Door single vertical hinged painted. Location(s): R5 | 1 |
| 3300-0011-005 | Door single horizontal hinged lift-up box pan configuration painted. Location(s): L3 | 1 |
| 3300-0011-006 | Door single horizontal hinged lift-up box pan configuration painted. Location(s): L4 | 1 |
| 3300-0017-007 | Door roll up short (up to 45") with satin finish ROM. Location(s): L5. | 1 |
| 3300-0019-003 | Door roll up tall (greater than 45") with satin finish ROM. Location(s): L1. | 1 |
| 3300-0019-004 | Door roll up tall (greater than 45") with satin finish ROM. Location(s): L2. | 1 |
| 3300-0019-015 | Door roll up tall (greater than 45") with satin finish ROM. Location(s): R1. | 1 |
| 3300-0019-016 | Door roll up tall (greater than 45") with satin finish ROM. Location(s): R2. | 1 |
| SHELVES | | |
| 3370-0052-077 | Adjustable shelf (J-Style) for non-transverse compartments 16" or greater in depth. Location: L2 lower. | 1 |
| 3370-0052-081 | Adjustable shelf (J-Style) for non-transverse compartments 16" or greater in depth. Location: L5 lower. | 1 |
| 3370-0052-087 | Adjustable shelf (J-Style) for non-transverse compartments 16" or greater in depth. Location: R2 lower. | 1 |

| | | |
|---|---|---|
| 3370-0053-069 | Adjustable shelf (C-Style) for non-transverse compartments up to 15.99" in depth. Location: L1 lower. | 1 |
| 3370-0053-073 | Adjustable shelf (C-Style) for non-transverse compartments up to 15.99" in depth. Location: R1 lower. | 1 |
| 3370-0054-077 | Tracks for adjustable shelf and/or adjustable tray in compartments 16" or greater in depth. Location: L2 lower. | 1 |
| 3370-0054-081 | Tracks for adjustable shelf and/or adjustable tray in compartments 16" or greater in depth. Location: L5 lower. | 1 |
| 3370-0054-087 | Tracks for adjustable shelf and/or adjustable tray in compartments 16" or greater in depth. Location: R2 lower. | 1 |
| 3370-0055-069 | Tracks for adjustable shelf in shallow compartments up to 15.99" deep. Location: L1 lower. | 1 |
| 3370-0055-073 | Tracks for adjustable shelf in shallow compartments up to 15.99" deep. Location: R1 lower. | 1 |
| COVERS | | |
| 3305-0007-000-02 | Vinyl Red hose bed cover with attached rear flap(s). | 1 |
| 3305-0008-000-02 | Vinyl Red crosslay cover with attached side flaps. | 1 |
| PUMP PANELS | | |
| 3134-0016 | Stainless steel driver and officer side pump panels. | 1 |
| 3134-0064 | The gauge panel(s) on the driver side of the Side Mount module to be hinged upward. Panel(s) to include (2) mechanical/pneumatic (as applicable to panel size) hold opens and latches. | 1 |
| 3134-0146 | Officer side upper pump access panel to be horizontally hinged with stainless steel door. Includes (2) push button latches and (1) hold open device. | 1 |
| MISC PUMP PANEL OPTIONS | | |
| 4460-0003 | Pump panel tags color coded per NFPA compliance. | 1 |
| WATER TANK | | |
| 4010-0195 | 300 gallon "T" water tank. UPF Poly III blue fill tower. | 1 |
| TANK PLUMBING | | |
| 4450-0010 | 2" tank fill Akron manual valve. | 1 |
| 4450-0022 | 3" tank to pump Akron manual valve. | 1 |
| LADDER STORAGE / RACKS | | |
| 3365-0076-Q04 | Center mounted ladder tunnel for HP100 and HPS100 Platforms. Note: 1" aerial raise required with 30' and larger 3-section ladder in tunnel. Rack to hold: (2) PEL-35, PEL-28, PEL-24, PRL-20, PRL-16 and FL-10 (with rubber block feet and no handles). | 1 |
| HANDRAILS / STEPS | | |
| 3330-0002-050 | Slide-out platform, rollerless. Includes chrome grab handle centered on the front face of the platform (includes hand rail as applicable). Located below driver side pump panel. | 1 |
| 3330-0279-060 | Innovative Controls dual lighted LED folding step. Location: officer side front compartment face. Each location requires a minimum of (1) handrail per NFPA. | 3 |
| 3330-0279-062 | Innovative Controls dual lighted LED folding step. Location: driver side front compartment face. Each location requires a minimum of (1) handrail per NFPA. | 3 |
| MISC BODY OPTIONS | | |
| 3340-0058 | Recessed fuel fill driver side wheel well. | 1 |
| 3340-0093 | Mud flaps, rear, black with E-ONE logo. | 1 |
| 3340-0107 | Diamond plate tandem axle wheel well. Includes bolt-on composite wheel well liners and fenderettes. | 1 |
| 3340-0270 | The painted aerial body side panels shall be smooth / flush. Applies to SideStacker HB side, panels next to water tank on MM, and upper body sides on RLP. | 1 |
| SCBA BOTTLE STORAGE | | |
| 3320-0009 | SCBA Bottle Storage. (8) Cast Product SCBA bottle storage with gasketed doors. (4) each side in rear wheel well area. | 1 |

| | | |
|---|---|---|
| 3320-0100 | Strap(s), loop style to retain SCBA bottle(s). Locate one per bottle in each exterior storage compartment. | 8 |
| **PUMPS** | | |
| 4005-0031 | Rating 1500 GPM. | 1 |
| 4005-0196 | Hale QMAX 1000-2250 GPM single stage pump. Requires primer option. | 1 |
| **PUMP CERTIFICATION** | | |
| 4475-0000 | Pump certification 750-2250 GPM | 1 |
| **PUMP OPTIONS** | | |
| 4015-0008 | Zinc anodes for Hale pump (PR), (1) discharge side and (1) intake side. | 1 |
| 4015-0022 | Mechanical pump seal - Hale. | 1 |
| 4015-0052-198 | Steamers to be Flush. Location: driver's side. | 1 |
| 4015-0052-199 | Steamers to be Flush. Location: officer's side. | 1 |
| 4015-0073 | Manual operated master pump drain. The master drain shall be clearly marked and placed in accessible location below running board on driver side or L1 compartment. | 1 |
| 4015-0210 | Pump cooler with Innovative Control 1/4 turn valve with "T" handle and label. | 1 |
| 4015-0238 | Hale electric primer (oil-less). | 1 |
| **INTAKES** | | |
| 4440-0005 | 2.5" Left Intake Akron Manual Valve. | 1 |
| **INTAKE OPTIONS** | | |
| 4445-0009 | Intake relief valve, Akron. | 1 |
| **DISCHARGES AND PRECONNECTS** | | |
| 4415-0012-654 | 1.5" Crosslay with Akron manual valve. Location: crosslay 1 & 2. | 2 |
| 4415-0014-581 | 2.5" Left Pump Panel Discharge Akron Manual Valve. Location: left side discharge 1. | 1 |
| 4415-0014-582 | 2.5" Left Pump Panel Discharge Akron Manual Valve. Location: left side discharge 2. | 1 |
| 4415-0016-584 | 2.5" Right Pump Panel Discharge Akron Manual Valve. Location: right side discharge 2. | 1 |
| 4415-0054-583 | 4" Right Pump Panel Discharge with 3" Akron Manual Valve (Waterous pumps noted location to be forward lower port). Location: right side discharge 1. | 1 |
| 4415-0058-655 | 2.5" Crosslay Akron Manual Valve. Location: crosslay 3. | 1 |
| 4415-0994 | 4" waterway discharge with 4" Akron electric valve with 9323 controller. | 1 |
| **DISCHARGE OPTIONS** | | |
| 4417-0175 | Innovative Controls push/pull valve controls with locking T handles. | 1 |
| 4417-0176 | Innovative Controls 3/4" bleeder/drain valve include lift lever with ergonomic grip. | 8 |
| 4417-0185 | Innovative Controls discharge and intake bezels with integral color code and verbiage for side mount pump panel. | 1 |
| **PRESSURE GOVERNORS** | | |
| 4465-0011 | Class 1 TPG pressure governor. Includes, water, oil, volt and tachometer. | 1 |
| **GAUGES** | | |
| 4435-0083 | Innovative Controls 10 LED SL series water tank level gauge. On pump panel. | 1 |
| 4435-0246 | 2.5" Innovative Controls stainless steel case pressure gauge (0-400) with color code bezel. | 8 |
| 4435-0247 | 4" Innovative Controls stainless steel case master pressure gauges with bezel. Intake 30-0-400, and discharge 0-400. | 1 |
| **ELECTRICAL SYSTEMS** | | |
| 5010-0013-Y83 | Vehicle data recorder - 2009 / 2016 NFPA compliant. Includes occupant detection with display. Display location: inboard on driver's side overhead console. | 1 |
| 5010-0039 | V-MUX Electrical system for aerials. | 1 |
| 5010-0059-339 | VFD Text display for V-MUX electrical system. Location: center of dash. | 1 |
| **LIGHT BARS** | | |

| | | |
|---|---|---|
| 5300-0506-000-4V | Light bar LED color: Red/White with clear lenses | 1 |
| 5300-0515 | Whelen MKEZ7 1.5" standard mount for mini front light bars (4). | 1 |
| 5300-0523 | Whelen F4 Mini-Freedom LED side facing front cab light bars (PR) 21.5" . For use on rear mount platforms with supplemental upper level Zone A warning lights. Locate one each side front cab corners side facing. | 1 |

| WARNING LIGHT PACKAGES | | |
|---|---|---|
| 5550-0059-538 | Whelen Super LED lower level warning light package. Includes (8) red 600 LED light heads and (2) red 500 LED light heads w/chrome flanges. Locate side facing lights: at forward most position, in rear wheel well offset to front, and side facing at rear of body in rubrail if equipped. | 1 |

| WARNING LIGHTS | | |
|---|---|---|
| 5600-0078-290-06 | Whelen Super LED beacon (PR) model L31H with Red domes. Location above L2/R2 compartments offset rearward to supplement upper rear warnings. | 1 |
| 5600-0078-479-06 | Whelen Super LED beacon (PR) model L31H with Red domes. Location rear upper body on aerial style brackets. | 1 |
| 5600-0105-170 | Hazard (door ajar) light 2" LED. Location: center overhead. | 1 |

| SIRENS | | |
|---|---|---|
| 5500-0015 | Whelen model 295SLSA1 siren with microphone (replaced 295HFSA1). | 1 |
| 5500-0024-170 | The electronic siren control is to be located on the center overhead. | 1 |

| SPEAKERS | | |
|---|---|---|
| 5510-0029-209 | Speaker, Federal Signal Dynamax ES100 with "E-ONE" grille through bumper. Location: driver side front bumper. | 1 |

| DOT LIGHTING | | |
|---|---|---|
| 5150-0007 | Whelen 600 series LED vertical mount tail lights. Includes LED stop/tail, arrow turn and halogen back-up lights with vertical Cast 3 housing and weatherproof connectors. | 1 |
| 5150-0017 | License plate light LED with chrome housing located at the rear of the body. | 1 |
| 5150-0028 | Marker light LED body/cab package. E-ONE custom cab with rear mount aerial platform bodies only. Includes (3) marker lights on front of platform. | 1 |
| 5150-0080-462 | Weldon auxiliary turn signal model 9186-8580 LED (PR). Location: (1) each side in center of rear tandem wheel well. | 1 |

| LIGHTS - COMPARTMENT, STEP & GROUND | | |
|---|---|---|
| 5380-0032 | Ground light package LED - large. | 1 |
| 5380-0036 | Step light package body LED - small. | 1 |
| 5380-0136 | Compartment light package Amdor Luma-Bar LED for large bodies. Includes one light per compartment (two if transverse). | 1 |

| LIGHTS - DECK AND SCENE | | |
|---|---|---|
| 5390-0007 | Deck/scene light circuit wiring through chassis reverse. Requires rear deck or scene light. | 1 |
| 5390-0076 | Hose bed light Truck-Lite LED model 81380. Locate at front of hose bed. Switched with work light switch in cab. | 1 |
| 5390-0102 | Crosslay light Truck-Lite LED model 81380. Locate to rear of crosslay (SM) and forward of crosslay (TM as applicable). Switched with work light switch in cab. | 1 |
| 5390-0152-446 | Whelen 600 series gradient Super LED surface mounted scene lights (PR) with weatherproof connectors. Switch in cab (driver and officer side lights switched separately). Locate (1) each side at rear below pike pole compts. | 1 |

| LIGHTS - NON-WARNING | | |
|---|---|---|
| 5400-0003 | Engine compartment light (EA). | 1 |
| 5400-0010 | Incandescent pump compartment light (EA). | 1 |
| 5400-0054 | Spotlight Specialty 2150 hand held located on officer's side of cab dash w/12V receptacle. | 1 |
| 5400-0092 | Weldon pump panel LED light package with (3) lights per side pump panel. Pump panels over 45" may require additional lights. Side mount only. | 1 |

| CONTROLS / SWITCHES |
|---|

| | | |
|---|---|---|
| 5100-0000-199 | Foot switch to control air horns located officer's side. | 1 |
| 5100-0007-198 | Foot switch to control electronic siren located driver's side. | 1 |
| CAMERAS / INTERCOM | | |
| 5350-0156 | FRC ACT 2-way aerial intercom. | 1 |
| MISC ELECTRICAL | | |
| 1750-0082-762 | 12V power distribution module. Includes (6) battery hot and (6) switched hot circuits. 100 amps max (IATS). Location: behind officer's seat. | 1 |
| 5110-0017 | Back-up alarm 97 dB. | 1 |
| LIGHTS - QUARTZ | | |
| 5450-0144-063 | Fire Research, FRC Evolution 12V LED scene light model FCA530-V15-SW-H with external push-up pole. Includes switch in cab accessible to driver. Location: officer side back of cab. | 1 |
| 5450-0144-064 | Fire Research, FRC Evolution 12V LED scene light model FCA530-V15-SW-H with external push-up pole. Includes switch in cab accessible to driver. Location: driver side back of cab. | 1 |
| AERIAL MODEL | | |
| 6100-0018 | Platform HP100 with SideStacker T/T. Includes left side console, turntable mansaver bars and jack leg flood lights. | 1 |
| AERIAL HYDRAULIC SYSTEM OPTIONS | | |
| 6150-0003-216 | Gauge aerial hydraulic oil level. Electronic display to be located on pump operator's panel. | 1 |
| AERIAL CONTROLS | | |
| 6850-0008 | Platform leveling system to allow adjustment of platform pivot angle from cab. Includes light on back of platform visible by driver to indicate platform is in alignment with ladder. | 1 |
| 6850-0043 | Diamond plate turntable console mounted to tube style pedestal mount. Includes side hinged diamond plate cover with hinge on outboard side. Includes modified left side turntable handrail. (95-platform and HP/HPS100 Platform only) | 1 |
| MONITORS | | |
| 6300-0007 | Monitor Akron electric 1250GPM for platform. Includes tip controls, base controls and butterfly valve. | 1 |
| 6300-0017 | Monitor painted silver from OEM. | 1 |
| AERIAL WARNING LIGHTS | | |
| 6550-0002 | Outrigger warning lights (4) LED. Truck-Lite model 91R. | 1 |
| 6550-0014 | Whelen 600 Super LED red warning lights (4). Located down low across front of platform wired to upper level lights. | 1 |
| 6550-0017-224-06 | Whelen 600 Super LED Red LED warning lights on platform (PR). The lights shall be switched with aerial master and located one each side on the side of ground pad brackets. | 1 |
| AERIAL LIGHTING | | |
| 6560-0127 | FireTech model FT-WL3500-FT-W LED flood/spot light. Includes hardwired switch on turntable console. Location: left and right side of base section. | 1 |
| 6560-0163-235 | Light Whelen Micro Pioneer model MPPWCS low profile pedestal mount. Switched at light head and base console. Location(s): left side front of platform. | 1 |
| 6560-0163-236 | Light Whelen Micro Pioneer model MPPWCS low profile pedestal mount. Switched at light head and base console. Location(s): right side front of platform. | 1 |
| WATERWAY OPTIONS | | |
| 6350-0005 | Rear 4" NST waterway inlet for rear mounted aerials. Includes chrome cap. | 1 |
| 6350-0012-192 | Akron 2.5" valve for platform. Valve to be located at the front of platform next to monitor. | 1 |
| 6350-0014 | 2.5" chrome elbow with 2.5" x 1.5" reducer and 1.5" cap for platform / ladder discharge valve. | 1 |
| 6350-0067 | 2.5" Innovative Controls stainless steel case pressure gauge (0-400) with color code bezel. Locate next to waterway inlet. | 1 |

| | | |
|---|---|---|
| MISC AERIAL ELECTRICAL | | |
| 6570-0012 | Aerial Information System (AIS) for platform. | 1 |
| BREATHING AIR | | |
| 6400-0003 | Breathing air platform with (1) 444CF cylinder. Includes low air alarm. | 1 |
| SIGN PLATES | | |
| 6750-0004-000-39 | Aerial sign plates 12 x 144 (PR). Available on HP78, HP100 and HP100 platform only. Does not include lettering. Color: Job Color. | 1 |
| AERIAL TESTING | | |
| 6900-0000 | Aerial flow test - 3rd party. | 1 |
| 6900-0007 | Aerial 2016 NFPA Certification. | 1 |
| ELBOWS | | |
| 7400-0004 | Elbow 30 degree chrome swivel w/2.5"FNST x 2.5"MNST. | 3 |
| ADAPTERS | | |
| 7200-0026 | Swivel Connector 4" FNST x 5" Storz 30 Deg Elbow with Tethered Cap. | 1 |
| HAND TOOLS | | |
| 7600-0005 | Pike Pole Fiberglass 6'. | 2 |
| 7600-0006 | Pike Pole Fiberglass 8'. | 2 |
| 7600-0008 | Pike Pole Fiberglass 12'. | 2 |
| GROUND LADDERS | | |
| 7800-0002 | Alco-Lite FL-10, 10' folding ladder without shoes. | 1 |
| 7800-0010 | Alco-Lite PRL-16' roof ladder. | 1 |
| 7800-0016 | Alco-Lite PEL-24' 2-section extension ladder. | 1 |
| 7800-0021 | Alco-Lite PEL-28' extension ladder. | 1 |
| 7800-0024 | Alco-Lite PEL-35' extension ladder. | 2 |
| 7800-0038 | Alco-Lite PRL-20' roof ladder. | 1 |
| MISC LOOSE EQUIPMENT | | |
| 7600-0016 | Wheel chocks 44" NFPA compliant, pair (PR) of Zico SAC-44. Up to 44" diameter tires. Includes mounting brackets. | 4 |
| 7900-0014 | DOT Required Drive Away Kit - Kit includes three (3) triangular warning reflectors with carrying case. This kit is for the end user and is to remain with the truck. | 1 |
| EXTERIOR PAINT | | |
| 8100-0071 | Undercoating E-ONE. | 1 |
| 8100-0084 | All applicable pump/pre-connect application modules are to have a job color finish. Includes upper and lower pump modules, crosswalk module and/or speedlay/pre-connect module (as applicable). Rear mounted body/pump module to be painted job color. | 1 |
| 8100-0116 | Rear body surface to have a sanded finish (not painted job color). Includes hinged doors that do not have discrete sales codes and removable panels. | 1 |
| 8100-0176-000-17 | Paint E-ONE chassis cab - Sikkens paint. Color: FLNA3225E-1 Red. | 1 |
| 8100-0183-000-17 | Paint Body - Large - For Aerials, T/A Tankers/Wetsides, Rear Mounts and Rescues. Sikkens paint. Color: FLNA3225E-1 Red. | 1 |
| 8100-0354 | Paint lift cylinders, extension cylinders and upper turntable steelwork primary job color (does not apply to TT deck). | 1 |
| INTERIOR PAINT | | |
| 8150-0011 | The interior of the cab to be painted Zolatone gray. | 1 |
| STRIPING | | |
| 8200-0016 | White reflective tape on (4) outriggers. | 1 |
| 8300-0002-334-12 | NFPA Scotchlite Stripe - 4" wide and straight on front/sides of cab and sides/rear of body. Color: White. Location: bottom of stripe flush with top of bumper and straight back. | 1 |
| 8300-0042 | White rubrail scotchlite insert. | 1 |
| 8300-0084-000-72 | Chevron "A" style 6" printed sheet Scotchlite striping full width on rear of body. Includes rear facing | 1 |

| | | |
|---|---|---|
| | extrusions, panels and doors. Colors to be Yellow/Red. | |
| 8300-0313 | Yellow line to indicate designated standing / walking areas above 48" high in compliance with 2016 NFPA 1901. Line to be 1" wide. Steps, ladders and areas with a railing or structure at least 12" high are excluded from requiring the line. | 1 |

| GRAPHICS | | |
|---|---|---|
| 8400-0022 | Logo E-ONE (PR) on aerial lift cylinder. Logo to be black and white reflective material approx 14" long located midway along outward surface of cylinder. | 1 |

| WARRANTY / STANDARD & EXTENDED | | |
|---|---|---|
| 9100-0000 | Standard 1 Year Warranty. | 1 |
| 9100-0003 | Lifetime Frame Warranty. | 1 |
| 9100-0004 | 10 Year/100,000 Mile Structural Warranty for Alum Cab / Body - Statement of Warranty. | 1 |
| 9100-0005 | 10 Year Stainless Steel Plumbing Warranty - Statement of Warranty. | 1 |
| 9100-0007 | 20 Year Aerial Device Structural Warranty - Integrity Limited Warranty. | 1 |
| 9100-0019 | 10 Year Limited Paint and Perforation Warranty - For Sikkens Paint. | 1 |

| SUPPORT, DELIVERY, INSPECTIONS AND MANUALS | | |
|---|---|---|
| 9300-0000 | Vehicle familiarization aerial (Domestic). | 1 |
| 9300-0009 | Manuals, Operator and Service CD-ROM. | 1 |
| 9300-0016 | Approval Drawings-Standard. | 1 |
| 9300-0316 | Fire Apparatus Safety Guide published by FAMA, latest edition. | 1 |

PRICE - 2017 E-ONE HP100P AERIAL PLATFORM QUINT - CYCLONE CHASSIS - $1,041,686

# STATE OF OHIO TERM SCHEDULE

## 4200 SURFACE RD
## COLUMBUS, OH 43228

*Quote No: 57494*

**8/27/2016**

**Quote Rev:30 Drawing Rev:6**

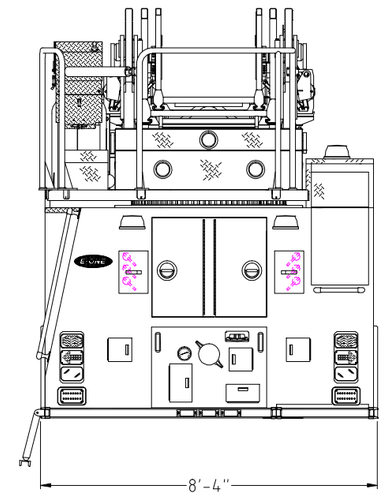


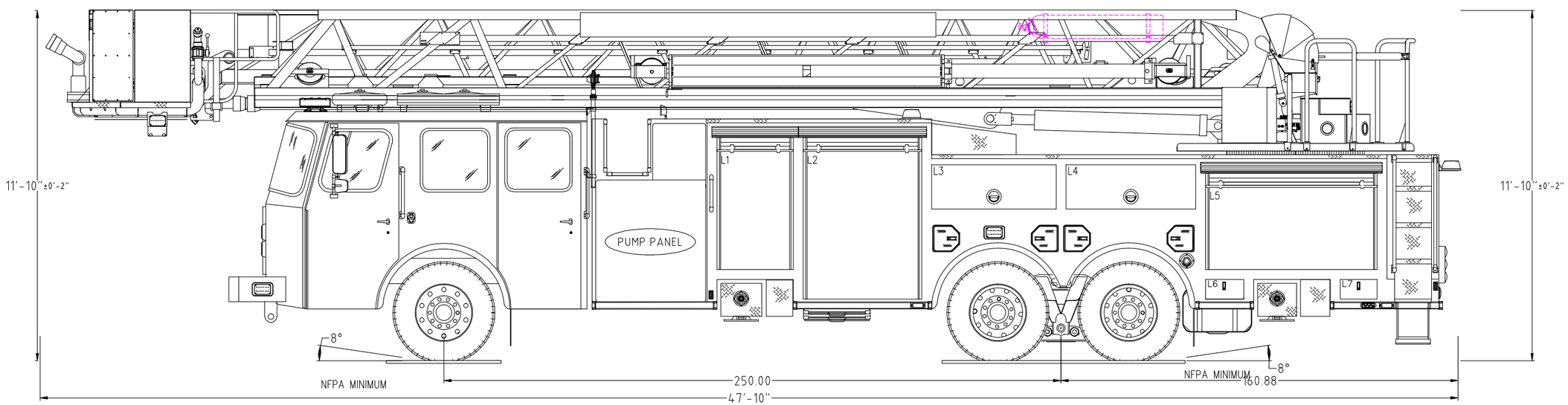


POWERED BY EZDRAW

Notice: This drawing provides a GENERAL REPRESENTATION of the vehicle configuration and should be used for evaluation purposes. The respective dimensions shown,including overall height and length, are estimates and may vary due to manufacturing processes. All other items such as lighting and fixtures, plumbing, compartmentation, and other generally assembled details are shown for REFERENCE ONLY and may not be a direct reflection of the final truck configuration. In ALL situations where this drawing may conflict with the specifications, THE SPECIFICATIONS, AS REFLECTED IN THE APPROVED SHOP ORDER, SHALL PREVAIL. Unless otherwise specified, the proposed apparatus will be manufactured to the latest NFPA recommendations as well as other applicable federally regulated safety regulations. E-One reserves the right to engineer and incorporate design improvements and changes without notice, while adhering to the intent of the specification.

| | |
|---|---|
| 1500 GPM PUMP<br>0 TOTAL VOLUME<br>0 TOTAL FOAM | HOSE LOADS : |

| | OPENING | | INTERIOR DIMENSIONS | | | | |
|---|---|---|---|---|---|---|---|
| COMPT. | WIDTH | HEIGHT | WIDTH | LOWER HEIGHT | LOWER DEPTH | UPPER HEIGHT | UPPER DEPTH |
| L1 | 29 | 49 | 31 | 57 | 14 | 49 | 17 |
| L2 | 46 | 61 | 48 | 69 | 25.5 | 61 | 17 |
| L3 | 50.5 | 18 | 50.5 | N/A | N/A | 18 | 26 |
| L4 | 52.5 | 18 | 52.5 | N/A | N/A | 18 | 20 |
| L5 | 67.5 | 34.5 | 69.5 | 42.5 | 23 | 34.5 | 18 |
| L6 | 15.5 | 8 | 15.5 | 8 | 23 | N/A | N/A |
| L7 | 15 | 8 | 15 | 8 | 23 | N/A | N/A |
| R1 | 29 | 49 | 31 | 57 | 14 | 49 | 16 |
| R2 | 46 | 61 | 48 | 69 | 26 | 61 | 16 |
| R3 | 15.5 | 32.5 | 15.5 | 30 | 23 | N/A | N/A |
| R4 | 31 | 20.5 | 31 | 30 | 14 | N/A | N/A |
| R5 | 36 | 32.5 | 36 | 30 | 23 | N/A | N/A |

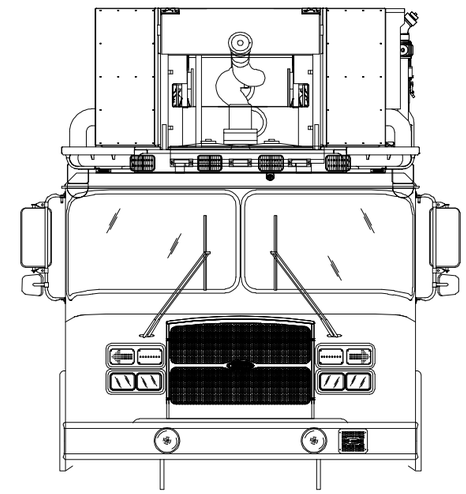

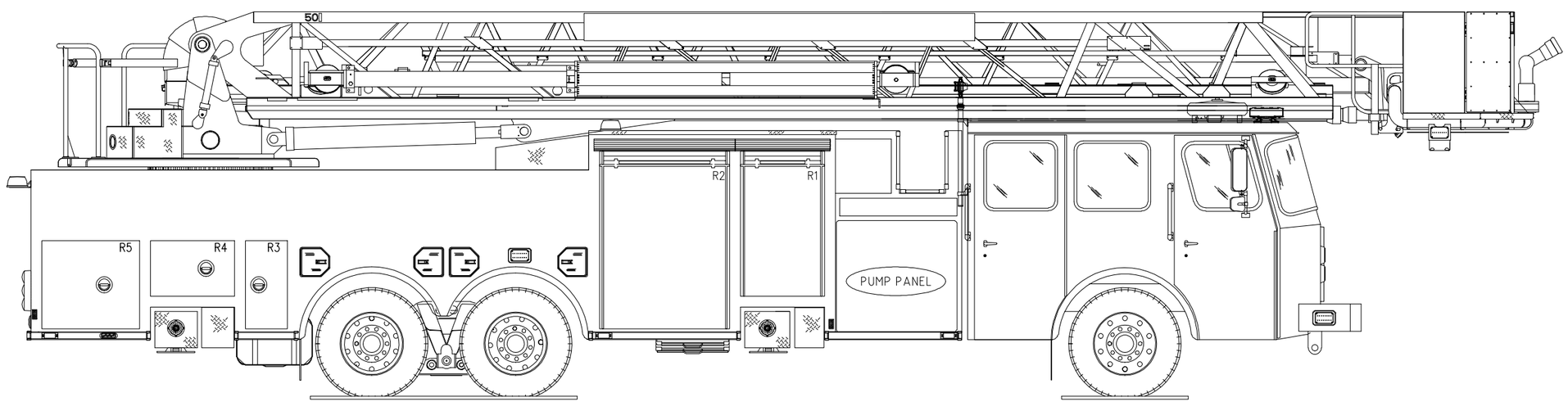


POWERED BY EZDRAW

Fire Apparatus Quotation for:
STATE OF OHIO TERM SCHEDULE

Quotation Number: 57495 Rev: 26

Unit Description: AEMM-CYC2-095P
Quote Description: Aerial Mid Mount, Cyclone II, 95 Platform

| Salescode | Extended Description | Qty |
|---|---|---|
| **TESTING COMPLIANCE STANDARD** | | |
| 1001-0065 | The E-ONE supplied components of the vehicle shall meet the requirements of NFPA 1901, 2016 edition. | 1 |
| 3090-0001 | Hosebed hoseload allowance on the apparatus shall be 1000 lbs. | 1 |
| 3090-0002 | OAH. Unit has no overall height restrictions. | 1 |
| 3090-0004 | OAL. Unit has no overall length restrictions. | 1 |
| 3340-1137-12C | Equipment allowance on the apparatus shall be 2500 lbs. This allowance is in addition to the weight of the hoses and ground ladders listed in the shop order as applicable. | 1 |
| **BUMPERS** | | |
| 1160-0000 | Bumper 10" stainless steel. | 1 |
| 1160-0008 | 3/16" Front Bumper Gravel Shield. | 1 |
| 1160-0013 | 16" Front Bumper Gravel Shield Extension. | 1 |
| **FRAME ASSEMBLY** | | |
| 1250-0073 | Frame - Formed torque box for HP95 Mid-Mount aerial. Includes 12" high rails below cab. | 1 |
| **AXLE OPTIONS** | | |
| 1025-0024 | Meritor RT-58-185 rear tandem axle 60,000 lb. capacity. | 1 |
| 1025-0152 | Reyco Granning independent front suspension - 22,800 lb. Includes shocks and sight glass on hubs. | 1 |
| **SUSPENSIONS** | | |
| 1070-0030 | Rear suspension FIREMAAX EX model FMX-622 air ride (60-62K) rated equal to the capacity of the axles. Requires alum wheels. Requires TB modification on 4-jack aerials. (Raises OAH .5" over springs) | 1 |
| **WHEEL OPTIONS** | | |
| 1050-0007 | Front axle wheel trim kit. Includes stainless steel lug nut covers (chrome plated plastic if applicable) and center cap with E-ONE logo. Note: Center cap will have an inspection port IPO a logo if equipped with Stemco oil seals. | 1 |
| 1050-0009 | Rear axle (tandem) wheel trim kit. Includes stainless steel lug nut covers (chrome plated plastic if applicable) and center caps with E-ONE logo. E-ONE custom chassis w/steel wheels will have chrome plated plastic lug covers. | 1 |
| 1050-0044 | Accuride aluminum wheels for front axle (2). | 1 |
| 1050-0046 | Accuride aluminum wheels for rear axles (8). | 1 |
| **TIRE OPTIONS** | | |
| 1060-0023 | Eight Michelin 315 rear tires with Mud and Snow tread | 1 |
| 1060-0046 | Two Michelin 425 tires model XFE for front axle. | 1 |
| 1060-0119 | RWC AirGuard LED tire pressure monitoring valve stem caps (10) for tandem rear axle applications. | 1 |
| **BRAKE SYSTEMS** | | |
| 1100-0006 | Parking brake release mounted on the driver's side lower dash. | 1 |
| 1100-0008 | Brake system air 6X4. | 1 |
| 1100-0014 | ArvinMeritor 16-1/2'' x 7'' S-cam brakes with cast brake drums for a tandem rear axle. | 1 |
| 1100-0054 | Bendix SN7 17" disc brakes for front axle. Reyco Granning IFS only. | 1 |

| | | |
|---|---|---|
| **AIR SYSTEM OPTIONS** | | |
| 1110-0000-001 | Inlet for air system. Location: driver door jamb. | 1 |
| 1110-0002 | Air dryer Bendix AD-9. | 1 |
| 1110-0006 | Air lines nylon. | 1 |
| 1110-0026 | Air horns recessed in bumper (PR). | 1 |
| 1110-0027 | Isolated air tank. Includes pressure protection valve. | 1 |
| 1110-0043 | Auxiliary air tank to be plumbed to the following optional accessories (if equipped): Chassis air horns, brake system air outlet, air reel, light tower, air primer and or customer/dealer supplied pneumatic add-on(s). | 1 |
| **ENGINES & TRANSMISSIONS** | | |
| 1200-0017 | Push-button transmission shift selector. | 1 |
| 1200-0021 | TransSynd synthetic transmission fluid for EVS 4000. | 1 |
| 1200-0096 | Electronic speed limiting set at 60 MPH. | 1 |
| 1200-0317 | Eng/Trans Cummins ISX12 500HP with EVS4000 transmission. 2016 EPA Compliant. | 1 |
| **SECONDARY BRAKING** | | |
| 1125-0002 | Jacobs engine compression brake. | 1 |
| 1125-0023 | Transmission to seek second gear when Jacobs engine brake or Telma retarder is engaged. N/A with Trans retarder. | 1 |
| **COOLING PACKAGE** | | |
| 1800-0013 | Cooling system for use with Cyclone II X, Typhoon X, and Quest chassis. For use with 2010 / 2013 / 2016 EPA engines. Includes coolant recovery system. | 1 |
| **FUEL SYSTEMS** | | |
| 1350-0001 | Dual fuel fill package. Additional fuel fill provided on officer side of unit. | 1 |
| 1350-0005 | Fuel system 65 gallons. | 1 |
| 1350-0012-670 | Fuel shut-off valve. Location: one (1) inlet side of OEM fuel filter. | 1 |
| 1350-0022 | Fuel line hose rubber. | 1 |
| **ALTERNATOR** | | |
| 1700-0005 | Alternator Leece Neville 320 amp. 320 amp SAE/275 amp NFPA. | 1 |
| **BATTERIES** | | |
| 1400-0002 | Battery four group 31 1000 CCA. | 1 |
| **CHASSIS OPTIONS** | | |
| 1680-0005 | Thermatic fan clutch. | 1 |
| 1680-0007 | Drivelines 1810. Required on 1550 lb/ft torque or greater engines. | 1 |
| 1680-0008 | Tow eyes front painted below bumper/cab (PR). | 1 |
| 1680-0012 | Tow eyes rear frame painted. | 1 |
| 1680-0017 | Hotshift PTO. | 1 |
| 1680-0188 | Aerial hydraulics installed on bottom port of EVS4000/4500 transmission (to allow for flat rear cab floor). Requires drive through hyd pump option (6150-0015) on aerials with hyd generator. | 1 |
| 1680-0250-M58 | Diesel Exhaust Fluid (DEF) 5 gallon tank for 2013 / 2016 EPA engines. Location: left side below rear of cab. | 1 |
| 1680-0284 | Radiator mounted power steering cooler. | 1 |
| **CAB MODEL** | | |
| 1520-0008 | Cyclone II X medium cab with 58" CA | 1 |
| **CAB ROOF TYPE** | | |
| 1615-0010 | Cab roof to be "flat" (non-vista). | 1 |
| **CAB BADGE PACKAGE** | | |
| 1610-0000 | Cab and body to have applicable E-ONE logos. | 1 |
| **CAB DOOR OPTIONS** | | |
| 1550-0003 | Rear crew cab doors in the medium position. | 1 |
| 1550-0005 | Driver and officer cab door windows. Include forward vent windows. | 1 |

| | | |
|---|---|---|
| 1550-0011 | Rear crew cab door windows. Includes manual roll-down actuation. Not available on Typhoon or CII with paddle style door latching. | 1 |
| 1550-0016 | Cab door panels ABS. | 1 |
| 1550-0025 | All cab doors shall have "L" style exterior latches. | 1 |
| 1550-0027 | Front cab door windows to have manual actuation. | 1 |
| 1550-0038-659 | (4) LED cab step area lighting. Locate each light on each cab door in the inboard position. Lights to be switched with door ajar. | 1 |
| 1550-0044 | All cab door kick plates to be made from diamond plate aluminum. | 1 |
| 1550-0059-000-G6 | Reflective Red/Lemon Yellow printed striping positioned in the "A" formation located on the cab door panels. | 1 |
| 1550-0077 | Interior cab door locks - manual. Will have manual actuation from each respective door. Includes barrel style key lock on each exterior cab door. | 1 |
| 1550-0084 | All cab exterior access doors to have 1250 keyed locks. | 1 |

| CAB STEP OPTIONS | | |
|---|---|---|
| 1640-0045-158 | Step below cab door. Open back style with angled corners. Located driver's front door. Steps under front cab doors shall not interfere with approach angle. | 1 |
| 1640-0045-159 | Step below cab door. Open back style with angled corners. Located officer's front door. Steps under front cab doors shall not interfere with approach angle. | 1 |
| 1640-0045-160 | Step below cab door. Open back style with angled corners. Located driver's rear door. Steps under front cab doors shall not interfere with approach angle. | 1 |
| 1640-0045-161 | Step below cab door. Open back style with angled corners. Located officer's rear door. Steps under front cab doors shall not interfere with approach angle. | 1 |

| MIRRORS | | |
|---|---|---|
| 1670-0003 | Velvac 2010 mirrors. Door mounted west coast style with remote control and heat. | 1 |

| MISC EXTERIOR CAB OPTIONS | | |
|---|---|---|
| 1550-0020 | Windows cab side fixed driver's side. | 1 |
| 1550-0033 | Windows cab side fixed officer's side. | 1 |
| 1675-0022 | Pair of 18" handrails located just behind driver and officer front door one each side. | 1 |
| 1675-0024 | Pair of 36" handrails located just behind driver and officer rear door (ALS doors if equipped) one each side. | 1 |
| 1675-0030 | Mud flaps, front, black with E-ONE logo. | 1 |
| 1675-0047 | Rear cab wall to be 3/16" aluminum diamond plate. | 1 |
| 1675-0201 | Large radius cab wheel well. Includes bolt-on adjustable wheel well trim. | 1 |
| 1675-0202 | Mounting plate for battery charger receptacle, indicator and air inlet (if applicable). Plate to be removable brushed stainless steel. | 1 |

| HVAC | | |
|---|---|---|
| 1515-0018 | Air conditioning for the Typhoon X, CII X and Quest with roof top mounted condenser. | 1 |
| 1515-0053 | Controls for heating and air conditioning shall be located in the center dash area. (Lower area on Typhoon and CII with severe duty dash) | 1 |
| 1685-0057 | Heaters cab rear with covers (PR), and front heater with heat to the feet for the driver and officer. | 1 |

| SEATS | | |
|---|---|---|
| 1510-0003 | Seats, Inc. brand 911 cab seats. | 1 |
| 1510-0007 | Seat cover material vinyl. | 1 |
| 1510-0008 | Seat color gray. | 1 |
| 1510-0035-147 | Universal air pack bottle bracket (EA). Location: officer's seat. | 1 |
| 1510-0035-148 | Universal air pack bottle bracket (EA). Location: rear facing driver's side. | 1 |
| 1510-0035-151 | Universal air pack bottle bracket (EA). Location: inboard driver's side rear wall. | 1 |
| 1510-0035-152 | Universal air pack bottle bracket (EA). Location: inboard officer's side rear wall. | 1 |
| 1510-0035-215 | Universal air pack bottle bracket (EA). Location: rear facing officer's side. | 1 |
| 1510-0038 | Driver seat 911 air ride. | 1 |
| 1510-0042 | Officer seat to be 911 fixed SCBA. | 1 |
| 1510-0050 | Rear facing 911 seat with SCBA driver's side. | 1 |
| 1510-0053 | Rear facing 911 seat with SCBA officer's side. | 1 |
| 1510-0062 | Two man bench centered on rear wall with 911 SCBA backs. Includes angled corners. | 1 |
| 1685-0033 | Seating capacity tag of six occupants. | 1 |

| | | |
|---|---|---|
| **MISC INTERIOR CAB OPTIONS** | | |
| 1685-0000 | Cab interior gray. Does not include engine cover or seat color. | 1 |
| 1685-0005 | Lexan sun visors, driver and officer's side overhead. | 1 |
| 1685-0168 | ABS Dash package. Includes center and officer side dash, lower kick panels and "A" post covers. | 1 |
| 1685-0187 | Severe duty engine cover, molded polyurethane. | 1 |
| **CAB ELECTRICAL OPTIONS** | | |
| 1750-0013-172 | Turn signal Whelen 600 LED amber arrow pair located upper headlight bezel. | 1 |
| 1750-0024-179-04 | Auto-Eject receptacle inlet 20 amp located outside driver's door next to handrail with a Yellow cover. | 1 |
| 1750-0029 | Switch horn button two position DOT/air horn. | 1 |
| 1750-0046-195 | Cab Headlights. Position: lower. | 1 |
| 1750-0072-593 | 12 VDC (or 24VDC) electrical outlet in the cab wired battery hot. Location: officer side dash. | 2 |
| 1750-0075 | English dominant main cab gauge cluster. | 1 |
| 1750-0158 | Dome Lts Red/White LED. Package includes two lights mounted in the front and two mounted in the rear of the cab. White light wired through door and light assembly switch. Red light through light assembly switch. | 1 |
| 1750-0198-A31 | Battery charger to be located behind driver's seat. | 1 |
| 1750-0343 | Battery charger E-ONE LPC 20. 120 volt inlet, 20 amp output. | 1 |
| 1750-0435 | Halogen cab headlights. TyphoonX, CIIX and QST2 only. | 1 |
| 1750-0449 | Momentary DPF regeneration override switch. | 1 |
| **BODY MODEL** | | |
| 3080-0034 | HP95 MidMount center body with pump and 300g tank. | 1 |
| 3080-0041 | HP95 MidMount rear body with hosebed. | 1 |
| 3080-0147 | HP95 MidMount front body with pump (for use with DPF / SCR aftertreatment). | 1 |
| **BODY COMPT REAR** | | |
| 3110-0360 | Rear of body to have un-painted smooth plate overlay style body panels to facilitate rear body striping. | 1 |
| **AERIAL BODY OPTIONS** | | |
| 3310-0032 | Recessed tubes for (6) pike poles. Not available on HP75 SideStacker. | 1 |
| 3310-0037 | Rear ladder tunnel doors. Vertically hinged diamond plate. | 1 |
| 3310-0058 | Crosslay triple 5.5" wide single stack to hold up to (2) 200' of 2.0" DJ (each) and up to 200' 2.5" DJ. | 1 |
| 3310-0161 | Jack leg opening covers diamond plate (2) sets. Includes diamond plate outrigger covers and fixed diamond plate filler panels. | 1 |
| 3310-0311 | Auxiliary jack pads 24X24 (4) with 20 degree formed handle. Includes mounting brackets to store (2) each side of the body next to front drop down jacks. | 1 |
| **DOORS** | | |
| 3300-0007-003 | Door single vertical hinged painted. Location(s): L1 | 1 |
| 3300-0007-004 | Door single vertical hinged painted. Location(s): L2 | 1 |
| 3300-0007-015 | Door single vertical hinged painted. Location(s): R1 | 1 |
| 3300-0007-016 | Door single vertical hinged painted. Location(s): R2 | 1 |
| 3300-0007-018 | Door single vertical hinged painted. Location(s): R4 | 1 |
| 3300-0011-005 | Door single horizontal hinged lift-up box pan configuration painted. Location(s): L3 | 1 |
| 3300-0164-007 | Door double vertical hinged w/rotary latches - painted . Location(s): L5 | 1 |
| 3300-0164-017 | Door double vertical hinged w/rotary latches - painted . Location(s): R3 | 1 |
| 3300-0164-019 | Door double vertical hinged w/rotary latches - painted . Location(s): R5 | 1 |
| 3300-0167-006 | Door double 3-point vertical hinged w/rotary latches - painted. Location(s): L4 | 1 |
| **SHELVES** | | |
| 3370-0052-079 | Adjustable shelf (J-Style) for non-transverse compartments 16" or greater in depth. Location: L4 lower. | 1 |
| 3370-0052-081 | Adjustable shelf (J-Style) for non-transverse compartments 16" or greater in depth. Location: L5 lower. | 1 |
| 3370-0053-015 | Adjustable shelf (C-Style) for non-transverse compartments up to 15.99" in depth. Location: R1. | 1 |

| | | |
|---|---|---|
| 3370-0053-016 | Adjustable shelf (C-Style) for non-transverse compartments up to 15.99" in depth. Location: R2. | 1 |
| 3370-0054-079 | Tracks for adjustable shelf and/or adjustable tray in compartments 16" or greater in depth. Location: L4 lower. | 1 |
| 3370-0054-081 | Tracks for adjustable shelf and/or adjustable tray in compartments 16" or greater in depth. Location: L5 lower. | 1 |
| 3370-0055-015 | Tracks for adjustable shelf in shallow compartments up to 15.99" deep. Location: R1. | 1 |
| 3370-0055-016 | Tracks for adjustable shelf in shallow compartments up to 15.99" deep. Location: R2. | 1 |
| COVERS | | |
| 3305-0007-000-02 | Vinyl Red hose bed cover with attached rear flap(s). | 1 |
| 3305-0008-000-02 | Vinyl Red crosslay cover with attached side flaps. | 1 |
| PUMP PANELS | | |
| 3134-0016 | Stainless steel driver and officer side pump panels. | 1 |
| 3134-0039 | The gauge panel on the driver side pump panel is to be hinged upward. Includes two spring type hold opens, two trigger latches, and a recessed handle. | 1 |
| 3134-0055 | Officer side upper pump access panel to be horizontal hinged with stainless steel door. Includes (2) push button latches and (2) hold open devices. | 1 |
| MISC PUMP PANEL OPTIONS | | |
| 4460-0003 | Pump panel tags color coded per NFPA compliance. | 1 |
| WATER TANK | | |
| 4010-0195 | 300 gallon "T" water tank. UPF Poly III blue fill tower. | 1 |
| TANK PLUMBING | | |
| 4450-0010 | 2" tank fill Akron manual valve. | 1 |
| 4450-0023 | 3" Tank to Pump Akron Air Actuated Valve | 1 |
| LADDER STORAGE / RACKS | | |
| 3365-0036-603 | Center mounted ladder tunnel. Ladder rack to hold: PEL3-35, PEL-24, (2)PRL-16, PRL-14 and FL-10 | 1 |
| HANDRAILS / STEPS | | |
| 3330-0002-050 | Slide-out platform, rollerless. Includes chrome grab handle centered on the front face of the platform (includes hand rail as applicable). Located below driver side pump panel. | 1 |
| 3330-0288 | Step swing down diamond plate with gator grip located at each aerial access staircase (3). Includes mechanical lock to store in the up position. (HP95MM Platform only) | 1 |
| MISC BODY OPTIONS | | |
| 3340-0059 | Recessed fuel fills for dual fuel fill application, (1) each side in rear wheel wells. | 1 |
| 3340-0093 | Mud flaps, rear, black with E-ONE logo. | 1 |
| 3340-0107 | Diamond plate tandem axle wheel well. Includes bolt-on composite wheel well liners and fenderettes. | 1 |
| 3340-0270 | The painted aerial body side panels shall be smooth / flush. Applies to SideStacker HB side, panels next to water tank on MM, and upper body sides on RLP. | 1 |
| 3340-0478 | Insulation shall be installed behind and / or below the body to protect the compartment(s) from excessive exhaust system heat. | 1 |
| SCBA BOTTLE STORAGE | | |
| 3320-0009 | SCBA Bottle Storage. (8) Cast Product SCBA bottle storage with gasketed doors. (4) each side in rear wheel well area. | 1 |
| 3320-0100 | Strap(s), loop style to retain SCBA bottle(s). Locate one per bottle in each exterior storage compartment. | 8 |
| PUMPS | | |
| 4005-0033 | Rating 2000 GPM | 1 |
| 4005-0198 | Hale 8FGR 1500-2000 GPM Pump single stage. Requires dual primer option. | 1 |

| | | |
|---|---|---|
| **PUMP CERTIFICATION** | | |
| 4475-0000 | Pump certification 750-2250 GPM | 1 |
| **PUMP OPTIONS** | | |
| 4015-0008 | Zinc anodes for Hale pump (PR), (1) discharge side and (1) intake side. | 1 |
| 4015-0052-198 | Steamers to be Flush. Location: driver's side. | 1 |
| 4015-0052-199 | Steamers to be Flush. Location: officer's side. | 1 |
| 4015-0073 | Manual operated master pump drain. The master drain shall be clearly marked and placed in accessible location below running board on driver side or L1 compartment. | 1 |
| 4015-0210 | Pump cooler with Innovative Control 1/4 turn valve with "T" handle and label. | 1 |
| 4015-0243 | Hale electric primer - dual (oil-less). | 1 |
| **INTAKES** | | |
| 4440-0005 | 2.5" Left Intake Akron Manual Valve. | 1 |
| **INTAKE OPTIONS** | | |
| 4445-0009 | Intake relief valve, Akron. | 1 |
| **DISCHARGES AND PRECONNECTS** | | |
| 4415-0012-654 | 1.5" Crosslay with Akron manual valve. Location: crosslay 1 & 2. | 2 |
| 4415-0014-581 | 2.5" Left Pump Panel Discharge Akron Manual Valve. Location: left side discharge 1. | 1 |
| 4415-0014-582 | 2.5" Left Pump Panel Discharge Akron Manual Valve. Location: left side discharge 2. | 1 |
| 4415-0016-584 | 2.5" Right Pump Panel Discharge Akron Manual Valve. Location: right side discharge 2. | 1 |
| 4415-0054-583 | 4" Right Pump Panel Discharge with 3" Akron Manual Valve (Waterous pumps noted location to be forward lower port). Location: right side discharge 1. | 1 |
| 4415-0058-655 | 2.5" Crosslay Akron Manual Valve. Location: crosslay 3. | 1 |
| 4415-0994 | 4" waterway discharge with 4" Akron electric valve with 9323 controller. | 1 |
| **DISCHARGE OPTIONS** | | |
| 4417-0175 | Innovative Controls push/pull valve controls with locking T handles. | 1 |
| 4417-0176 | Innovative Controls 3/4" bleeder/drain valve include lift lever with ergonomic grip. | 8 |
| 4417-0185 | Innovative Controls discharge and intake bezels with integral color code and verbiage for side mount pump panel. | 1 |
| **PRESSURE GOVERNORS** | | |
| 4465-0011 | Class 1 TPG pressure governor. Includes, water, oil, volt and tachometer. | 1 |
| **GAUGES** | | |
| 4435-0001 | Class 1 Intelli-Tank water tank level gauge. On pump panel. | 1 |
| 4435-0246 | 2.5" Innovative Controls stainless steel case pressure gauge (0-400) with color code bezel. | 8 |
| 4435-0247 | 4" Innovative Controls stainless steel case master pressure gauges with bezel. Intake 30-0-400, and discharge 0-400. | 1 |
| **ELECTRICAL SYSTEMS** | | |
| 5010-0013-Y83 | Vehicle data recorder - 2009 / 2016 NFPA compliant. Includes occupant detection with display. Display location: inboard on driver's side overhead console. | 1 |
| 5010-0039 | V-MUX Electrical system for aerials. | 1 |
| 5010-0059-339 | VFD Text display for V-MUX electrical system. Location: center of dash. | 1 |
| **LIGHT BARS** | | |
| 5300-0504 | Whelen MKEZ7 1.5" standard mount for front light bar (PR). | 1 |
| 5300-0506-000-4V | Light bar LED color: Red/White with clear lenses | 1 |
| 5300-0511 | Light bar Whelen Freedom IV Model F4X7 72" with 8 LED modules. Location: Centered on the front cab roof. | 1 |
| **WARNING LIGHT PACKAGES** | | |
| 5550-0059-538 | Whelen Super LED lower level warning light package. Includes (8) red 600 LED light heads and (2) red | 1 |

| | | |
|---|---|---|
| | 500 LED light heads w/chrome flanges. Locate side facing lights: at forward most position, in rear wheel well offset to front, and side facing at rear of body in rubrail if equipped. | |
| **WARNING LIGHTS** | | |
| 5600-0078-479-06 | Whelen Super LED beacon (PR) model L31H with Red domes. Location rear upper body on aerial style brackets. | 1 |
| 5600-0105-170 | Hazard (door ajar) light 2" LED. Location: center overhead. | 1 |
| **SIRENS** | | |
| 5500-0015 | Whelen model 295SLSA1 siren with microphone (replaced 295HFSA1). | 1 |
| 5500-0024-170 | The electronic siren control is to be located on the center overhead. | 1 |
| **SPEAKERS** | | |
| 5510-0029-209 | Speaker, Federal Signal Dynamax ES100 with "E-ONE" grille through bumper. Location: driver side front bumper. | 1 |
| **DOT LIGHTING** | | |
| 5150-0006 | Whelen 600 series LED horizontal mount tail lights. Includes LED stop/tail, arrow turn and halogen back-up lights with horizontal Cast 3 housing and weatherproof connectors. | 1 |
| 5150-0017 | License plate light LED with chrome housing located at the rear of the body. | 1 |
| 5150-0026 | Marker light LED body/cab package. E-ONE custom cab with aerial ladder, Mid-Mount platform or Bronto bodies only. | 1 |
| 5150-0039 | Marker lights Britax amber/red rubber housed mounted on the rear body corners angled down. | 1 |
| 5150-0080-462 | Weldon auxiliary turn signal model 9186-8580 LED (PR). Location: (1) each side in center of rear tandem wheel well. | 1 |
| **LIGHTS - COMPARTMENT, STEP & GROUND** | | |
| 5380-0032 | Ground light package LED - large. | 1 |
| 5380-0033 | Step light package body - small. | 1 |
| 5380-0136 | Compartment light package Amdor Luma-Bar LED for large bodies. Includes one light per compartment (two if transverse). | 1 |
| **LIGHTS - DECK AND SCENE** | | |
| 5390-0007 | Deck/scene light circuit wiring through chassis reverse. Requires rear deck or scene light. | 1 |
| 5390-0058-457 | Deck Lights - Truck-Lite LED model 81380 (PR). Location: (1) each side of body rear facing up high. | 1 |
| 5390-0076 | Hose bed light Truck-Lite LED model 81380. Locate at front of hose bed. Switched with work light switch in cab. | 1 |
| 5390-0102 | Crosslay light Truck-Lite LED model 81380. Locate to rear of crosslay (SM) and forward of crosslay (TM as applicable). Switched with work light switch in cab. | 1 |
| **LIGHTS - NON-WARNING** | | |
| 5400-0003 | Engine compartment light (EA). | 1 |
| 5400-0010 | Incandescent pump compartment light (EA). | 1 |
| 5400-0054 | Spotlight Specialty 2150 hand held located on officer's side of cab dash w/12V receptacle. | 1 |
| 5400-0110 | Weldon pump panel light LED package - RLP/MM. Includes (2) lights per side pump panel and (2) lights for angled upper control panel. | 1 |
| **CONTROLS / SWITCHES** | | |
| 5100-0000-199 | Foot switch to control air horns located officer's side. | 1 |
| 5100-0007-198 | Foot switch to control electronic siren located driver's side. | 1 |
| **CAMERAS / INTERCOM** | | |
| 5350-0156 | FRC ACT 2-way aerial intercom. | 1 |
| **MISC ELECTRICAL** | | |
| 1750-0082-762 | 12V power distribution module. Includes (6) battery hot and (6) switched hot circuits. 100 amps max (IATS). Location: behind officer's seat. | 1 |
| 5110-0017 | Back-up alarm 97 dB. | 1 |

| | | |
|---|---|---|
| **AERIAL MODEL** | | |
| 6100-0008 | Platform HP95 Mid-Mount. Includes driver side console, level assist and jack leg flood lights. | 1 |
| **AERIAL HYDRAULIC SYSTEM OPTIONS** | | |
| 6150-0003-216 | Gauge aerial hydraulic oil level. Electronic display to be located on pump operator's panel. | 1 |
| **AERIAL CONTROLS** | | |
| 6850-0042 | Roll-top multi-level turntable console mounted to tube style pedestal mount.<br>Cover to be 3-piece design. (95-platform, HP95 MM Platform and HP/HPS100 Platform only) | 1 |
| **MONITORS** | | |
| 6300-0007 | Monitor Akron electric 1250GPM for platform. Includes tip controls, base controls and butterfly valve. | 1 |
| 6300-0017 | Monitor painted silver from OEM. | 1 |
| **AERIAL WARNING LIGHTS** | | |
| 6550-0001 | Outrigger warning lights (PR) LED. Truck-Lite model 91R. | 1 |
| **AERIAL LIGHTING** | | |
| 6560-0127 | FireTech model FT-WL3500-FT-W LED flood/spot light. Includes hardwired switch on turntable console. Location: left and right side of base section. | 1 |
| 6560-0163-235 | Light Whelen Micro Pioneer model MPPWCS low profile pedestal mount. Switched at light head and base console. Location(s): left side front of platform. | 1 |
| 6560-0163-236 | Light Whelen Micro Pioneer model MPPWCS low profile pedestal mount. Switched at light head and base console. Location(s): right side front of platform. | 1 |
| **WATERWAY OPTIONS** | | |
| 6350-0009 | Right side 4" NST waterway inlet for Mid-Mount Boom or Platform. Includes chrome cap. | 1 |
| 6350-0012-192 | Akron 2.5" valve for platform. Valve to be located at the front of platform next to monitor. | 1 |
| 6350-0014 | 2.5" chrome elbow with 2.5" x 1.5" reducer and 1.5" cap for platform / ladder discharge valve. | 1 |
| 6350-0067 | 2.5" Innovative Controls stainless steel case pressure gauge (0-400) with color code bezel. Locate next to waterway inlet. | 1 |
| **MISC AERIAL ELECTRICAL** | | |
| 6570-0012 | Aerial Information System (AIS) for platform. | 1 |
| **BREATHING AIR** | | |
| 6400-0003 | Breathing air platform with (1) 444CF cylinder. Includes low air alarm. | 1 |
| **AERIAL EQUIPMENT** | | |
| 6500-0011-138 | Pike pole tube for 6' pole on ladder. Location: left side fly section. | 1 |
| 6500-0019-266 | Axe bracket mounted on aerial. For use with a 6 lb. axe only. Location: right side inside of platform. | 1 |
| **SIGN PLATES** | | |
| 6750-0001-000-39 | Aerial sign plates 16 x 144 (PR). Available on LTH100, HP100L, HPS105L, HP95 and HP100P only (requires 6750-0014 for special bracket on HP100P if there are not ladder brackets on each side).<br>Does not include lettering. Color: Job Color | 1 |
| **AERIAL TESTING** | | |
| 6900-0000 | Aerial flow test - 3rd party. | 1 |
| 6900-0007 | Aerial 2016 NFPA Certification. | 1 |
| **ELBOWS** | | |
| 7400-0004 | Elbow 30 degree chrome swivel w/2.5"FNST x 2.5"MNST. | 3 |
| **ADAPTERS** | | |

| | | |
|---|---|---|
| 7200-0026 | Swivel Connector 4" FNST x 5" Storz 30 Deg Elbow with Tethered Cap. | 1 |

| HAND TOOLS | | |
|---|---|---|
| 7600-0005 | Pike Pole Fiberglass 6'. | 2 |
| 7600-0006 | Pike Pole Fiberglass 8'. | 2 |
| 7600-0008 | Pike Pole Fiberglass 12'. | 2 |

| GROUND LADDERS | | |
|---|---|---|
| 7800-0007 | Alco-Lite PRL-14' roof ladder. | 1 |
| 7800-0010 | Alco-Lite PRL-16' roof ladder. | 2 |
| 7800-0016 | Alco-Lite PEL-24' 2-section extension ladder. | 1 |
| 7800-0023 | Alco-Lite PEL3-35' 3-section extension ladder. | 1 |
| 7800-0032 | Alco-Lite FL-10, 10' folding ladder w/safety shoes. | 1 |

| MISC LOOSE EQUIPMENT | | |
|---|---|---|
| 7600-0016 | Wheel chocks 44" NFPA compliant, pair (PR) of Zico SAC-44. Up to 44" diameter tires. Includes mounting brackets. | 4 |
| 7900-0014 | DOT Required Drive Away Kit - Kit includes three (3) triangular warning reflectors with carrying case. This kit is for the end user and is to remain with the truck. | 1 |

| EXTERIOR PAINT | | |
|---|---|---|
| 8100-0071 | Undercoating E-ONE. | 1 |
| 8100-0116 | Rear body surface to have a sanded finish (not painted job color). Includes hinged doors that do not have discrete sales codes and removable panels. | 1 |
| 8100-0176-000-17 | Paint E-ONE chassis cab - Sikkens paint. Color: FLNA3225E-1 Red. | 1 |
| 8100-0183-000-17 | Paint Body - Large - For Aerials, T/A Tankers/Wetsides, Rear Mounts and Rescues. Sikkens paint. Color: FLNA3225E-1 Red. | 1 |
| 8100-0354 | Paint lift cylinders, extension cylinders and upper turntable steelwork primary job color (does not apply to TT deck). | 1 |

| INTERIOR PAINT | | |
|---|---|---|
| 8150-0011 | The interior of the cab to be painted Zolatone gray. | 1 |

| STRIPING | | |
|---|---|---|
| 8200-0015 | White reflective tape on (2) outriggers. | 1 |
| 8300-0002-334-12 | NFPA Scotchlite Stripe - 4" wide and straight on front/sides of cab and sides/rear of body. Color: White. Location: bottom of stripe flush with top of bumper and straight back. | 1 |
| 8300-0042 | White rubrail scotchlite insert. | 1 |
| 8300-0084-000-72 | Chevron "A" style 6" printed sheet Scotchlite striping full width on rear of body. Includes rear facing extrusions, panels and doors. Colors to be Yellow/Red. | 1 |
| 8300-0313 | Yellow line to indicate designated standing / walking areas above 48" high in compliance with 2016 NFPA 1901. Line to be 1" wide. Steps, ladders and areas with a railing or structure at least 12" high are excluded from requiring the line. | 1 |

| GRAPHICS | | |
|---|---|---|
| 8400-0022 | Logo E-ONE (PR) on aerial lift cylinder. Logo to be black and white reflective material approx 14" long located midway along outward surface of cylinder. | 1 |

| WARRANTY / STANDARD & EXTENDED | | |
|---|---|---|
| 9100-0000 | Standard 1 Year Warranty. | 1 |
| 9100-0003 | Lifetime Frame Warranty. | 1 |
| 9100-0004 | 10 Year/100,000 Mile Structural Warranty for Alum Cab / Body - Statement of Warranty. | 1 |
| 9100-0005 | 10 Year Stainless Steel Plumbing Warranty - Statement of Warranty. | 1 |
| 9100-0007 | 20 Year Aerial Device Structural Warranty - Integrity Limited Warranty. | 1 |
| 9100-0019 | 10 Year Limited Paint and Perforation Warranty - For Sikkens Paint. | 1 |

| SUPPORT, DELIVERY, INSPECTIONS AND MANUALS | | |
|---|---|---|
| 9300-0000 | Vehicle familiarization aerial (Domestic). | 1 |
| 9300-0009 | Manuals, Operator and Service CD-ROM. | 1 |
| 9300-0016 | Approval Drawings-Standard. | 1 |
| 9300-0316 | Fire Apparatus Safety Guide published by FAMA, latest edition. | 1 |

PRICE - 2017 E-ONE 95 MID-MT AERIAL PLATFORM QUINT - CYCLONE CHASSIS - $1,061,328

# STATE OF OHIO TERM SCHEDULE

## 4200 SURFACE RD
## COLUMBUS, OH 43228

*Quote No: 57495*

**8/27/2016**

**Quote Rev:26 Drawing Rev:6**

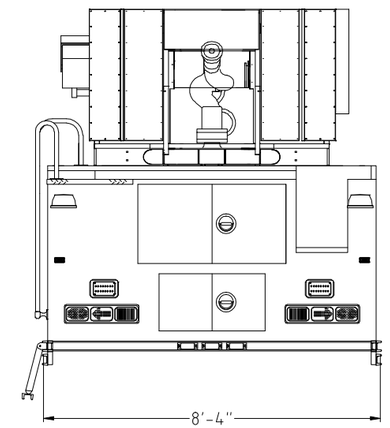


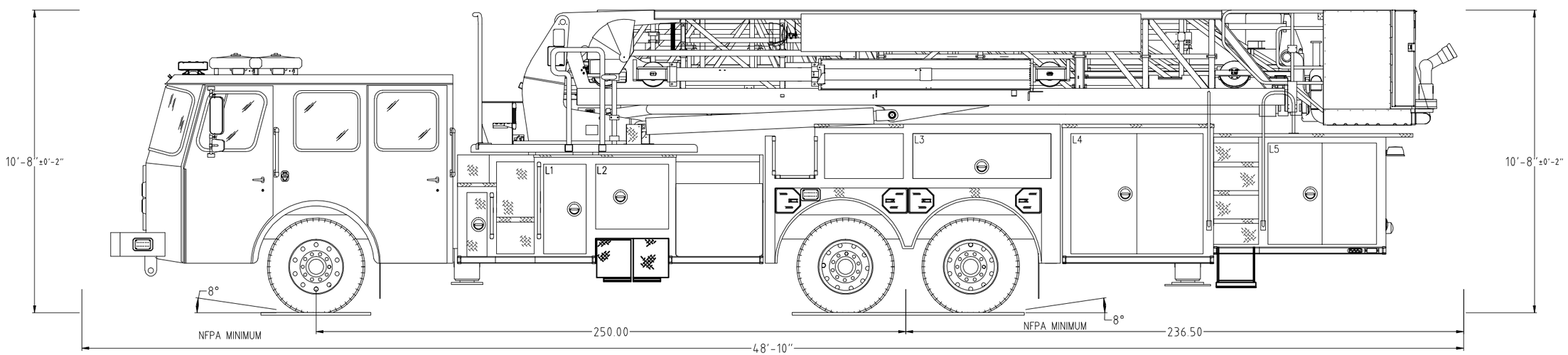


POWERED BY EZDRAW

Notice: This drawing provides a GENERAL REPRESENTATION of the vehicle configuration and should be used for evaluation purposes. The respective dimensions shown,including overall height and length, are estimates and may vary due to manufacturing processes. All other items such as lighting and fixtures, plumbing, compartmentation, and other generally assembled details are shown for REFERENCE ONLY and may not be a direct reflection of the final truck configuration. In ALL situations where this drawing may conflict with the specifications, THE SPECIFICATIONS, AS REFLECTED IN THE APPROVED SHOP ORDER, SHALL PREVAIL. Unless otherwise specified, the proposed apparatus will be manufactured to the latest NFPA recommendations as well as other applicable federally regulated safety regulations. E-One reserves the right to engineer and incorporate design improvements and changes without notice, while adhering to the intent of the specification.

2000 GPM PUMP
0 TOTAL VOLUME
0 TOTAL FOAM

HOSE LOADS :

| | OPENING | | INTERIOR DIMENSIONS | | | | |
|---|---|---|---|---|---|---|---|
| COMPT. | WIDTH | HEIGHT | WIDTH | LOWER HEIGHT | LOWER DEPTH | UPPER HEIGHT | UPPER DEPTH |
| L1 | 18 | 38 | 18 | N/A | N/A | N/A | N/A |
| L2 | 31 | 27.5 | 31 | N/A | N/A | 27.5 | 3 |
| L3 | 58.5 | 19 | 58.5 | N/A | N/A | 19 | 25 |
| L4 | 56 | 51 | 56 | 30 | 26 | 21 | 22 |
| L5 | 46 | 43 | 46 | 30 | 26 | 13 | 22 |
| R1 | 18 | 38 | 18 | N/A | N/A | 38 | 20 |
| R2 | 31 | 27.5 | 31 | N/A | N/A | 27.5 | 3 |
| R3 | 56 | 28.13 | 56 | 30 | 26 | -1.87 | 21 |
| R4 | 19 | 24 | 19 | 30 | 26 | -6 | 21 |
| R5 | 46 | 24 | 46 | 30 | 26 | -6 | 21 |

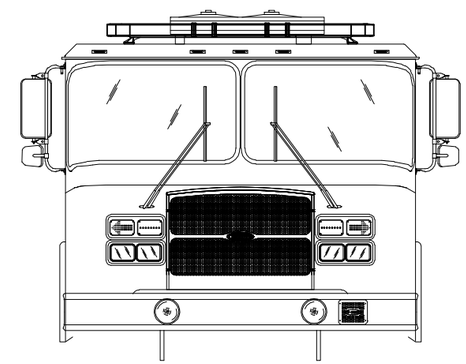

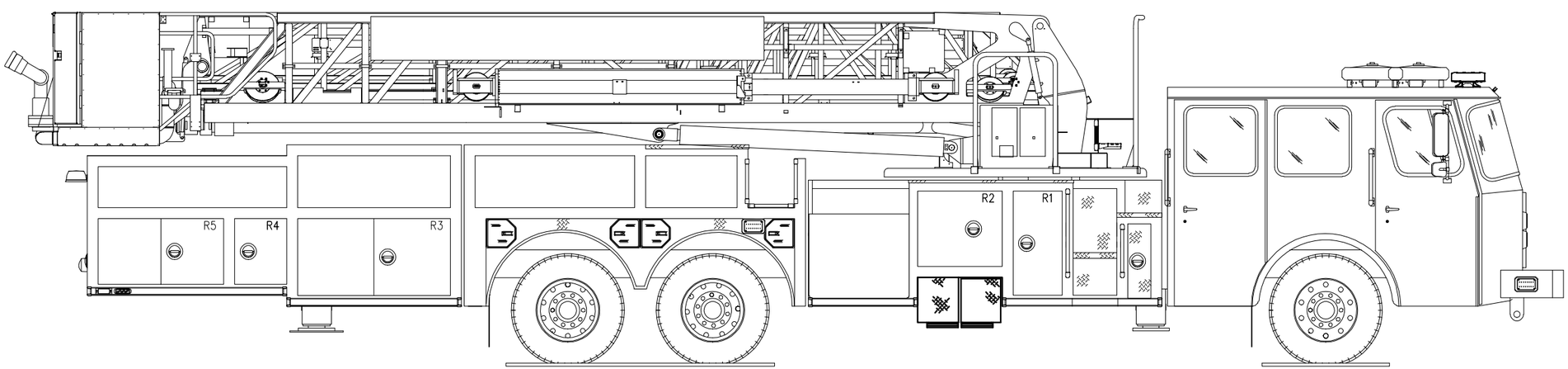


POWERED BY EZDRAW

# E-ONE OHIO STATE TERM SCHEDULE 2017 OPTIONS PRICE BOOK
## AERIALS

| Item No. | Description | |
|---|---|---|
| **CUSTOM CHASSIS** | | |
| 1020-0036 | Gates Green Stripe hose IPOS (silicone hose) shall be used for all heater applications within the cab. | $122 |
| 1025-0002 | Dana 22I 22800 lb. front axle. | $19,760 |
| 1025-0004 | Meritor FL941 front axle 18000 lb. with assist cylinder. | $13,630 |
| 1025-0005 | Meritor FL-941 front axle 18700 lb. | $17,911 |
| 1025-0006 | Meritor FL941 front axle 20000 lbs. | $18,559 |
| 1025-0007 | Meritor FL941 front axle 21000lb | $18,559 |
| 1025-0009 | Meritor FL943 front axle 18000 lbs. | $14,537 |
| 1025-0010 | Meritor FL-943 front axle 18700 lb. | $18,817 |
| 1025-0011 | Meritor FL-943 front axle 20000 lb. | $19,597 |
| 1025-0012 | Meritor FL-943 front axle 21000 lb. | $19,855 |
| 1025-0013 | Meritor FL-943 front axle 21500 lbs. | $20,245 |
| 1025-0017 | Meritor RS-25-160 single rear axle 27000 lb. capacity. | $13,368 |
| 1025-0018 | Meritor RS-30-185 single rear axle 31000 lb. capacity. | $14,926 |
| 1025-0019 | Meritor RT-40-145 rear tandem axle 40000 lb. capacity. | $27,250 |
| 1025-0020 | Meritor RT-46-160 rear tandem axle 46000 lb. capacity. | $31,792 |
| 1025-0021 | Meritor RT-46-160 rear tandem axle 48000 lb. capacity. | $31,792 |
| 1025-0022 | Meritor RT-50-160 rear tandem axle 52000 lb. capacity. | $40,226 |
| 1025-0023 | Meritor RT-50-160 rear tandem axle 54000 lb. capacity. | $40,226 |
| 1025-0024 | Meritor RT-58-185 rear tandem axle 60000 lb. capacity. | $50,607 |
| 1025-0027 | Driver controlled rear differential. | $852 |
| 1025-0028 | Koni shock absorbers for front axle - adjustable. | $371 |
| 1025-0029 | Front shock absorbers. | $200 |
| 1025-0030 | Stemco oil seal front axle. Chicago Rawhide seal with Stemco sight glass will be supplied when front disc brakes are selected. | $121 |
| 1025-0031 | Spiral pins front suspension. | $1,850 |
| 1025-0034 | Automatic traction control. In addition to standard ABS system. | $639 |
| 1025-0035 | Koni shock absorbers for rear axle. | $588 |
| 1025-0036 | Automatic Traction Control System 6x4/6x6 | $2,179 |
| 1025-0038 | Meritor RT-58-185 rear tandem axle 62000 lb. capacity. | $59,689 |
| 1025-0039 | Rear steer axle FL941 21500lb for tiller. | $26,634 |
| 1025-0060 | Meritor FL-943 front axle 22100 lb. | $21,005 |
| 1025-0073 | Meritor RS-30-185 single rear axle 31500 lb. capacity. | $14,926 |
| 1025-0077 | Rear steer axle FL941 22100lb for tiller. | $26,634 |
| 1025-0078 | S-Cam brakes to have Haldex brand slack adjusters (per axle). | $339 |
| 1025-0081 | Chicago Rawhide oil seal rear axle (per axle). Not available with disc brakes. | $256 |
| 1025-0086 | Meritor FL941 front axle 18500lb. | $17,911 |
| 1025-0087 | Dana S35-590 single rear axle 32500lb capacity. Requires Bendix rear brakes. | $18,989 |
| 1025-0088 | Synthetic 75w90 gear oil for rear axle. | $406 |
| 1025-0090 | Meritor RT-46-160 rear tandem axle rated at 40000lb capacity. | $31,792 |
| 1025-0097 | Meritor RS-30-185 single rear axle 33000 lb. capacity. Requires 16.5" x 8.625" cast shoe brakes and 33K suspension. | $14,926 |
| 1025-0107 | Synthetic 75w90 gear oil for front axle. | $126 |
| 1025-0110 | Meritor RT-50-160 rear tandem axle 50000lb capacity | $40,226 |
| 1025-0120 | Driver controlled rear differential. Includes guarded toggle switch located on driver side diagnostic panel. | $852 |
| 1025-0121 | 2 year extended parts and labor warranty (total of 3 year warranty) on Timoney Independent Suspension Front Axle. Does not include steering components. | $1,792 |
| 1025-0124 | Meritor FL943 front axle 20000 lb. Springs to have Berlin style eyes with rubber bushings. | $19,929 |
| 1025-0125 | Meritor FL943 front axle 19840 lb. | $18,817 |
| 1025-0127 | Meritor FL941 front axle 18000 lb with multi-leaf front springs. | $12,375 |
| 1025-0132 | Koni shock absorbers for front axle - non-adjustable. For use with IFS front axle only. | $371 |
| 1025-0133 | Meritor FL943 front axle 20000 lb with multi-leaf front springs. | $20,029 |
| 1025-0134 | Meritor MT-40-14X rear tandem axle 40000 lb. capacity. | $27,250 |
| 1025-0135 | AxleTech FS25 front axle 18700 lb. Includes sight guage. | $19,924 |
| 1025-0137 | Meritor FL943 front axle 19220 lb. | $18,817 |
| 1025-0138 | AxleTech FS25 front axle 20000 lb. Includes sight guage. | $19,924 |

| Item No. | Description | |
|---|---|---|
| 1025-0142 | Chicago oil seal front axle. Chicago Rawhide seal with Chicago Rawhide sight glass (model 1743) will be supplied when front disc brakes are selected. | $121 |
| 1025-0145 | Front suspension grease points/spring pins shall have fittings inboard of the frame rails with grease fittings pointed towards the center of the chassis to prepare for dealer/customer supplied lubrication system. | $552 |
| 1025-0147 | Reyco Granning independent front suspension - 18700 lb. Includes shocks and sight glass on hubs. | $31,931 |
| 1025-0148 | Reyco Granning independent front suspension - 19840 lb. Includes shocks and sight glass on hubs. | $31,931 |
| 1025-0149 | Reyco Granning independent front suspension - 20000 lb. Includes shocks and sight glass on hubs. | $31,931 |
| 1025-0150 | Reyco Granning independent front suspension - 21000 lb. Includes shocks and sight glass on hubs. | $31,931 |
| 1025-0151 | Reyco Granning independent front suspension - 21500 lb. Includes shocks and sight glass on hubs. | $31,931 |
| 1025-0152 | Reyco Granning independent front suspension - 22800 lb. Includes shocks and sight glass on hubs. | $31,931 |
| 1025-0153 | Reyco Granning independent front suspension - 24000 lb. Includes shocks and sight glass on hubs. | $31,931 |
| 1025-0156 | Bilstein nitrogen shock absorbers for front axle. | $555 |
| 1025-0157 | Bilstein nitrogen shock absorbers for tandem rear axle. | $1,763 |
| 1025-0158 | Stemco sight glass guards. | $104 |
| 1025-0163 | Rear axle high water ventilation tube. | $236 |
| 1025-0165 | Meritor FL-943 front axle 22500 lb. | $20,961 |
| 1025-0171 | Dana 22I 24000 lb. front axle. | $20,123 |
| 1025-0174 | Meritor FL941 front axle 18000 lb. | $11,943 |
| 1025-0175 | Meritor RS-25-160 single rear axle at 24000 lb. rated capacity. | $13,368 |
| 1025-0178 | Meritor FL941 front axle 21200lb | $18,559 |
| 1050-0000 | Steel wheels for front axle (2). | $350 |
| 1050-0001 | Alcoa aluminum wheels for front axle (2). | $1,888 |
| 1050-0002 | Steel wheels for rear axle (4). | $694 |
| 1050-0003 | Alcoa aluminum wheels for rear axle (4). | $3,770 |
| 1050-0004 | Steel wheels for rear axles (8). | $1,384 |
| 1050-0005 | Alcoa aluminum wheels for rear axles (8). | $7,535 |
| 1050-0007 | Front axle wheel trim kit. Includes stainless steel lug nut covers (chrome plated plastic if applicable) and center cap with E-ONE logo. Note: Center cap will have an inspection port IPO a logo if equipped with Stemco oil seals. | $253 |
| 1050-0008 | Rear axle (single) wheel trim kit. Includes stainless steel lug nut covers (chrome plated plastic if applicable) and center cap with E-ONE logo. E-ONE custom chassis w/steel wheels will have chrome plated plastic lug covers. | $312 |
| 1050-0009 | Rear axle (tandem) wheel trim kit. Includes stainless steel lug nut covers (chrome plated plastic if applicable) and center caps with E-ONE logo. E-ONE custom chassis w/steel wheels will have chrome plated plastic lug covers. | $694 |
| 1050-0017 | Each inside wheel of the single rear axle shall have valve stem extensions. | $128 |
| 1050-0018 | Each inside wheel of the tandem rear axles shall have valve stem extensions. | $252 |
| 1050-0019 | Two steel wheels painted job color on both the inside and outside facing for front axle. | $673 |
| 1050-0026 | Front axle Wheel Trim kit. Includes stainless steel lug nut covers and center cap (no logo). Note: Center cap will have an inspection port if equipped with Stemco oil seals. | $253 |
| 1050-0027 | Rear axle (single) wheel trim kit. Includes stainless steel lug nut covers (chrome plated plastic if applicable) and center caps (no logo). E-ONE custom chassis w/ steel wheels will have chrome plated plastic lug covers. | $312 |
| 1050-0028 | Rear axle (tandem) Wheel Trim kit. Includes stainless steel lug nut covers (chrome plated plastic if applicable) and center cap (No logo). E-ONE custom chassis w/ steel wheels will have chrome plated plastic lug covers. | $694 |
| 1050-0031 | Front axle wheel simulator kit. Includes stainless steel wheel simulator and center cap with E-ONE logo. Note: Center cap will have an inspection port IPO a logo if equipped with Stemco oil seals. | $608 |
| 1050-0032 | Rear axle (single) wheel simulator kit. Includes full stainless steel wheel simulators with integrated lug nut covers and E-ONE logo. | $886 |
| 1050-0033 | Dura-Brite finish on aluminum wheel (EA). Not available on 13" wheel (425 and 445 tires). | $115 |
| 1050-0038 | Steel wheels for rear axle (4) 24" split rim. | $7,161 |
| 1050-0039 | Polish inner and outer aluminum wheel (EA). | $94 |
| 1050-0043 | Rear axle (tandem) wheel simulator kit. Includes full stainless steel wheel simulators with integrated lug nut covers and E-ONE logo. | $1,769 |
| 1050-0044 | Accuride aluminum wheels for front axle (2). | $1,834 |

| Item No. | Description | |
|---|---|---|
| 1050-0045 | Accuride aluminum wheels for rear axle (4). | $3,659 |
| 1050-0046 | Accuride aluminum wheels for rear axles (8). | $7,313 |
| 1050-0047 | Front axle wheel trim kit. Includes stainless steel "Cover-Up" covers with E-ONE logo. Not available with Stemco oil seals. | $325 |
| 1050-0048 | Rear axle (single) Wheel Trim kit. Includes stainless steel "Cover-Up" covers with E-ONE logo. Not available with Stemco oil seals. | $418 |
| 1050-0049 | Rear axle (tandem) Wheel Trim kit. Includes stainless steel "Cover-Up" covers with E-ONE logo. | $833 |
| 1050-0068 | Each outboard facing wheel of the single axle unit shall have valve stem extensions; front 2" rear appropiately sized. Includes additional set (inside and outside) ship loose. | $250 |
| 1050-0070 | Accuride aluminum wheels outer and steel inner for rear axles (4). | $2,177 |
| 1050-0076 | Accu-Shield finish on aluminum wheel (EA). Not available on 13" wheel (425 and 445 tires). | $118 |
| 1050-0078 | Front axle wheel trim. Includes center cap with E-ONE logo only; NO lug nut covers. Note: Center cap will have an inspection port IPO a logo if equipped with Stemco oil seals. | $234 |
| 1050-0079 | Rear axle (single) wheel trim. Includes center cap with E-ONE logo only; NO lug nut covers. | $292 |
| 1050-0081 | Rear wheels to be 9 inches wide quantity (4). | $475 |
| 1050-0082 | Alcoa aluminum wheels outer and steel inner for rear axles (8). | $4,464 |
| 1050-0083 | Alcoa aluminum wheels outer and steel inner for rear axles (4). | $2,232 |
| 1060-0001 | Two Michelin 315 tires model XZA-1 for front axle. | $1,861 |
| 1060-0004 | Four Michelin 11R tires model XZE2 highway tread for rear axle. | $3,199 |
| 1060-0005 | Four Michelin 12R tires model XZE highway tread for rear axle. | $3,741 |
| 1060-0006 | Four Michelin 315 tires model XZA-1 for rear axle | $3,721 |
| 1060-0007 | Eight Michelin 11R tires model XZE2 for rear axles. | $6,393 |
| 1060-0008 | Eight Michelin 12R tires model XZE for rear axles | $7,480 |
| 1060-0009 | Eight Michelin 315 tires model XZA-1 for rear axles. | $7,444 |
| 1060-0010 | Two Goodyear 315 tires model G291 for front axle. | $1,861 |
| 1060-0016 | Four Michelin 12R rear tires with XDN2 mud and snow tread. | $4,092 |
| 1060-0017 | Four Michelin 315 rear tires with XDN2 mud and snow tread. | $4,485 |
| 1060-0020 | Four Goodyear 315 rear tires with mud and snow tread. Intermittent fire service rating if GAWR is over 29560. | $3,898 |
| 1060-0021 | Eight Michelin 11R rear tires with XDN2 mud and snow tread. | $7,182 |
| 1060-0022 | Eight Michelin 12R rear tires with XDN2 mud and snow tread. | $8,182 |
| 1060-0023 | Eight Michelin 315 rear tires with Mud and Snow tread | $8,968 |
| 1060-0026 | Eight Goodyear 315 rear tires with Mud and Snow tread. Intermittent fire service rating if GAWR is over 59120. | $7,793 |
| 1060-0030 | Four Goodyear 315 rear tires with G291 highway tread. | $3,721 |
| 1060-0033 | Eight Goodyear 315 rear tires with G291 highway tread. | $7,444 |
| 1060-0042 | Two Michelin 365 tires model XZA for front axle. Speed rating for up to 75 mph. Requires Alcoa alum wheels. | $1,902 |
| 1060-0043 | Two Michelin 425 tires model XZY3 for front axle. | $2,302 |
| 1060-0044 | Two Michelin 445 tires model XZY3 for front axle. | $2,227 |
| 1060-0045 | Two Michelin 445 tires model XFE for front axle. | $2,564 |
| 1060-0046 | Two Michelin 425 tires model XFE for front axle. | $2,389 |
| 1060-0047 | Two Michelin 385 tires model XFE for front axle. | $2,205 |
| 1060-0048 | Four Michelin 12.00 x 24 tires model XZY LRH for rear axle. Note: Tires have an operating restriction per Michelin bulletin MSPN29163 (maximum one-way distance of 50-miles with a one (1) hour cool down). | $4,386 |
| 1060-0049 | Tyron tire pressure monitoring system model TPMS. Includes wireless remote display in cab. | $1,201 |
| 1060-0050 | Tire pressure monitoring valve stem caps. | $176 |
| 1060-0051 | Two Michelin 385 tires model XZY3 for front axle. | $2,169 |
| 1060-0052 | Eight Michelin 275/80R tires model XZE2 for rear axles. | $6,178 |
| 1060-0053 | PressurePro tire pressure monitoring system for single rear axle units. Includes bail mounted display in cab. | $1,021 |
| 1060-0054 | PressurePro tire pressure monitoring system for tandem rear axle units. Includes bail mounted display in cab. | $1,222 |
| 1060-0060 | Two Michelin 315 tires model XZY3 for front axle. | $2,000 |
| 1060-0061 | Four Michelin 12R rear tires with Mud and Snow XDS tread | $3,379 |
| 1060-0072 | Two Goodyear 385 tires for front axle with G296 MSA highway tread. | $2,133 |
| 1060-0073 | Two Goodyear 425 tires for front axle. | $2,076 |
| 1060-0074 | Two Goodyear 445 tires for front axle | $2,247 |
| 1060-0075 | Four Goodyear 11R rear tires with G622 RSD mud and snow tread. | $3,949 |
| 1060-0076 | Four Goodyear 12R rear tires with mud and snow tread. | $4,500 |

| Item No. | Description | |
|---|---|---|
| 1060-0077 | Eight Goodyear 11R rear tires with G622 RSD Mud and Snow tread. | $7,900 |
| 1060-0078 | Eight Goodyear 12R rear tires with Mud and Snow tread | $9,001 |
| 1060-0079 | Four Goodyear 11R rear tires with highway tread | $2,859 |
| 1060-0081 | PressurePro tire pressure monitoring system for single rear axle units. Includes electrical system integrated display in cab. | $1,021 |
| 1060-0085 | Eight Michelin 12R rear tires with Mud and Snow XDS tread | $6,751 |
| 1060-0086 | Four Goodyear 11R rear tires with G287 MSA highway tread | $2,859 |
| 1060-0087 | Two Goodyear 315 tires with G287 MSA tread for front axle | $1,794 |
| 1060-0092 | Eight Michelin 275/80R22.5 rear tires with Mud and Snow tread. | $6,570 |
| 1060-0094 | Cat's Eye model 6120-AB00 single rear axle tire pressure monitoring system. For use on 120 PSI tires. Includes braided lines. | $854 |
| 1060-0095 | Eight Goodyear 315 rear tires with G287 MSA highway tread. | $7,547 |
| 1060-0096 | Tire balancing (EA). Location: front tires. | $69 |
| 1060-0098 | Two Bridgestone 315 tires model M860 for front axle. | $2,619 |
| 1060-0099 | Four Bridgestone 12R tires model R250F highway tread for rear axle. | $4,279 |
| 1060-0103 | Cat's Eye model 6130-AB00 single rear axle tire pressure monitoring system. For use on 130 PSI tires. Includes braided lines. | $854 |
| 1060-0104 | Four Goodyear 12R rear tires with G661 HSA highway tread. | $2,911 |
| 1060-0105 | Eight Goodyear 12R rear tires with G661 HSA highway tread. | $5,819 |
| 1060-0106 | Four Goodyear 11R rear tires with G661 HSA highway tread. | $2,704 |
| 1060-0109 | Eight Michelin 295/80R tires model XZA2 for rear axles. | $7,031 |
| 1060-0111 | Four Goodyear 315 rear tires with G289 WHA tread. | $4,067 |
| 1060-0112 | Tire pressure monitoring valve stem caps. Real Wheels LED indicators. | $234 |
| 1060-0114 | Tire pressure monitoring valve stem caps. VECSAFE LED indicators. | $234 |
| 1060-0117 | RWC AirGuard LED tire pressure monitoring valve stem caps (6) for single rear axle applications. | $180 |
| 1060-0118 | RWC AirGuard LED tire pressure monitoring valve stem caps (8) for Tiller applications. | $241 |
| 1060-0119 | RWC AirGuard LED tire pressure monitoring valve stem caps (10) for tandem rear axle applications. | $287 |
| 1060-0120 | Two Goodyear 315 front tires with G289 WHA tread. | $2,034 |
| 1060-0121 | Four Goodyear 11R rear tires with RHD-II G137 tread. | $3,535 |
| 1060-0123 | RWC AirGuard LED tire pressure monitoring valve stem caps (2) front only. For use with rear axle Crossfire equalization systems. | $73 |
| 1060-0127 | Four Goodyear 11R rear tires with G751 MSA highway tread | $2,859 |
| 1060-0128 | Tire pressure monitoring integrated with V-MUX multiplex electrical system. Includes wheel mounted sensors. Requires Vista display. For use with single rear axle units. | $1,283 |
| 1060-0129 | Tire pressure monitoring integrated with V-MUX multiplex electrical system. Includes wheel mounted sensors. Requires Vista display. For use with tandem rear axle units. | $1,753 |
| 1060-0130 | Four Michelin 12R rear tires with XZY3 tread. | $4,704 |
| 1060-0131 | Two Michelin 425 tires model XZL for front axle. | $2,302 |
| 1060-0132 | Four Goodyear 12R rear tires with G751 MSA highway tread. | $3,379 |
| 1060-0134 | Four Michelin 315 rear tires with XZY3 tread. | $4,485 |
| 1070-0001 | Rear suspension springs rated equal to the capacity of the axle. | $1,431 |
| 1070-0002 | Rear suspension springs rated equal to the capacity of the axles. | $4,481 |
| 1070-0003 | Rear suspension air ride rated equal to the capacity of the axle. | $5,815 |
| 1070-0004 | Rear suspension air ride (40-46K) rated equal to the capacity of the axles. | $10,135 |
| 1070-0005 | Air ride cab. | $2,990 |
| 1070-0007 | Shock absorbers rear single axle. Not available on 31000 lb. | $200 |
| 1070-0011 | Ridewell Dynalastic 62000 lb rear suspension. C-Frame applications only. | $12,214 |
| 1070-0012 | Reyco rear suspension springs rated equal to the capacity of the axle. | $1,431 |
| 1070-0013 | Rear suspension air ride (48-54K) rated equal to the capacity of the axles. | $11,873 |
| 1070-0014 | Rear suspension air ride (60-62K) rated equal to the capacity of the axles. | $13,705 |
| 1070-0015 | Ridewell Dynalastic rear suspension (40-54K) rated equal to the capacity of the axles. | $13,349 |
| 1070-0017 | Reyco rear spring suspension w/aux 33K rating. | $2,148 |
| 1070-0019 | Rear suspension springs rated at 27000 lbs. | $1,669 |
| 1070-0021 | Rear suspension FIREMAAX EX air ride (50-54K) rated equal to the capacity of the axles. Requires TB modification on 4-jack aerials. (Raises OAH .5" over springs) | $11,821 |
| 1070-0022 | Rear suspension FIREMAAX EX model FMX-482 air ride rated equal to the capacity of the axles (40-48K). Requires TB modification on 4-jack aerials. (Raises OAH .5" over springs) | $10,865 |
| 1070-0024 | Lower leaf wrap. Single rear axle only. | $572 |
| 1070-0027 | Rear suspension FIREMAAX EX model FMX-272 27000 lb. single axle air ride. | $6,248 |

| Item No. | Description | |
|---|---|---|
| 1070-0029 | Rear suspension FIREMAAX EX model FMX-312 31000 lb. single axle air ride. Requires aluminum wheels. | $8,183 |
| 1070-0030 | Rear suspension FIREMAAX EX model FMX-622 air ride (60-62K) rated equal to the capacity of the axles. Requires alum wheels. Requires TB modification on 4-jack aerials. (Raises OAH .5" over springs) | $13,867 |
| 1070-0032 | Rear suspension Link Atlas 33000 - 35000 lb. single axle air ride. Requires aluminum wheels. Not compatible with tire chains. | $9,309 |
| 1100-0000 | 16-1/2'' x 6'' S-cam brakes with ArvinMeritor automatic slack adjusters for front axle. | $327 |
| 1100-0001 | Meritor EX225H 17" disc brakes for front axle. | $1,278 |
| 1100-0002 | ArvinMeritor 16-1/2'' x 7'' S-cam brakes with cast brake drums for a single rear axle. | $327 |
| 1100-0003 | Meritor EX225H 17" disc brakes for rear axle maximum capacity 27000 lbs. | $1,278 |
| 1100-0004 | Meritor EX225H 17" disc brakes for rear axles maximum capacity 54000 lbs. | $1,952 |
| 1100-0005 | Brake system air 4X2/4X4. | $8,634 |
| 1100-0007 | Parking brake release mounted center of the engine cover. | $333 |
| 1100-0008 | Brake system air 6X4. | $8,945 |
| 1100-0009 | Front axle parking brake. | $547 |
| 1100-0010 | Brake emergency release for spring. | $995 |
| 1100-0011 | Roll Stability Control Includes ATC. Not available on commercial chassis tiller or tandem axle custom chassis. | $2,067 |
| 1100-0014 | ArvinMeritor 16-1/2'' x 7'' S-cam brakes with cast brake drums for a tandem rear axle. | $395 |
| 1100-0015 | Air brake system tractor/tiller ABS system for both tractor and tiller axle brakes. | $8,827 |
| 1100-0016 | 16-1/2'' x 6'' Q-Plus S-cam brakes with ArvinMeritor automatic slack adjusters for Tillerman steering axle. | $327 |
| 1100-0018 | Dust Shields. Front and Rear Axle. CAM Brakes only. | $381 |
| 1100-0019 | Dust Shields. Rear Axle. CAM Brakes only. | $232 |
| 1100-0020 | Compression fittings for all air brake system lines. Includes cab interior air lines as applicable. | $1,279 |
| 1100-0022 | Dust Shields. Front and rear tandem axle. CAM brakes only. | $611 |
| 1100-0023 | Stainless steel park brake release guard. | $223 |
| 1100-0024 | G4 Electronic Stability Control (4x2) Includes RSC and ATC. Not available on 4x4 commercial chassis or tiller. | $3,636 |
| 1100-0025 | ArvinMeritor 16-1/2'' x 8.625'' Q-Plus S-cam brakes with cast brake drums for a single rear axle. 24K axle only. | $1,346 |
| 1100-0026 | G4 Electronic Stability Control (6x4) Includes RSC and ATC. Not available on 6x6 or commercial chassis. | $4,334 |
| 1100-0027 | Knorr-Bremse 17" disc brakes for front axle. Timoney IFS only. | $1,278 |
| 1100-0028 | ArvinMeritor 18'' x 7'' P-Type S-cam brakes with cast brake drums for a 33K single rear axle. | $2,360 |
| 1100-0031 | Dana ADB22X 17" disc brakes for front axle. | $1,278 |
| 1100-0032 | Hinged stainless steel park brake release guard. | $297 |
| 1100-0033 | Bendix 16-1/2'' x 7'' S-cam brakes for 32500 Dana axle. | $327 |
| 1100-0034 | Brake chambers 30-36 for 48K/54K tandem rear axle. N/A with disc brakes. | $1,132 |
| 1100-0035 | Glad Hands tow option. Location: Front chassis frame. | $558 |
| 1100-0036 | 16.5'' x 8.625'' P-Cast S-cam brakes for 27000 - 33000 Meritor axle. | $838 |
| 1100-0037 | Glad Hands tow option. Location: rear chassis frame. | $558 |
| 1100-0038 | Heavy duty 16-1/2'' x 6'' S-cam brakes with ArvinMeritor automatic slack adjusters for front axle. For use with 22100 Meritor axle. | $770 |
| 1100-0040 | Gauge air brake application additional. Location: officer side overhead console. | $318 |
| 1100-0043 | Emergency park brake activation valve mounted on the officer's side dash with stainless steel guard. | $691 |
| 1100-0045 | 2nd parking brake release mounted on the officer's side electrical access cover (side facing) with stainless steel guard. Severe duty interior only. | $929 |
| 1100-0046 | Brake system air tank to be mounted as high as possible. | $223 |
| 1100-0048 | Emergency park brake activation valve mounted on the center console offset driver side with stainless steel guard. | $691 |
| 1100-0049 | Parking brake release mounted on center dash (not available with ABS dash). | $324 |
| 1100-0052 | G4 Electronic Stability Control with Wabco OnGuard CMS system (4x2). Includes RSC and ATC. Not available on 4x4 commercial chassis or tiller. | $7,698 |
| 1100-0053 | G4 Electronic Stability Control with Wabco OnGuard CMS system (6x4). Includes RSC and ATC. Not available on 4x4 commercial chassis or tiller. | $8,397 |
| 1100-0054 | Bendix SN7 17" disc brakes for front axle. Reyco Granning IFS only. | $1,278 |

| Item No. | Description | |
|---|---|---|
| 1100-0055 | Spring guards on each end of brake lines from wheel to frame. | $175 |
| 1100-0057 | Brake chambers to be type 24 front and 30/30 rear. MGM piston style long stroke. | $669 |
| 1100-0058 | Safety Check brake stroke indicators. | $739 |
| 1100-0059 | Stainless steel u-bolt design park brake release guard. | $223 |
| 1100-0060 | Brake chambers on front axle to be type 24. MGM piston style long stroke. | $335 |
| 1100-0061 | Glad Hands tow option. Location: Front chassis frame below gravel shield driver side. | $558 |
| 1100-0063 | ArvinMeritor 16-1/2'' x 8.625'' Q-Plus S-cam brakes with cast brake drums for a 48K tandem rear axle. | $2,690 |
| 1100-0064 | Glad Hands tow option. Location: Front chassis frame below gravel shield officer side. | $558 |
| 1100-0066 | Emergency park brake activation valve mounted on the officer's side upper tier with stainless steel guard. | $691 |
| 1110-0000 | Inlet for air system. Location: [#LOC]. | $388 |
| 1110-0001 | Air inlet auto eject. Includes weatherproof gasketed cover. [#LOC]. | $499 |
| 1110-0002 | Air dryer Bendix AD-9. | $505 |
| 1110-0003 | Air dryer System Saver 1200. | $608 |
| 1110-0004 | Air tank drains w/pull cords. | $443 |
| 1110-0005 | Automatic moisture ejectors heated. | $440 |
| 1110-0007 | Air lines braided. | $2,354 |
| 1110-0008 | Gauge air brake application mounted in cab | $318 |
| 1110-0011 | Air intake restriction gauge. | $271 |
| 1110-0012 | Air outlet off front ACC tank. It shall be located [#LOC]. | $388 |
| 1110-0013 | Air horns shut-off valve. Located in cab accessible by driver. | $114 |
| 1110-0025 | Thomas 110 volt air compressor plumbed to air brake system. | $1,212 |
| 1110-0026 | Air horns recessed in bumper (PR). | $860 |
| 1110-0027 | Isolated air tank. Includes pressure protection valve. | $585 |
| 1110-0041 | Air horns Grover recessed in bumper (PR). | $1,047 |
| 1110-0042 | Label on isolated air tank "Air Horns Only". | $35 |
| 1110-0044 | Air inlet Auto-Eject. Includes [#COL] weatherproof gasketed cover. Location: [#LOC]. | $499 |
| 1110-0045 | Gast air compressor 110v model 3HBB-32-M300AX. | $1,120 |
| 1110-0046 | Kussmaul 12V Auto Drain. For use with Kussmaul air compressor. | $486 |
| 1110-0049 | Air Lines Wrapped in Thermal Loom | $1,906 |
| 1110-0050 | Air brake lines to have 4 to 6'' slack for future service work. | $117 |
| 1110-0052 | Air horns recessed behind bumper (PR). Includes E-ONE grilles on bumper. | $1,082 |
| 1110-0053 | Air horns Grover recessed in front bumper. (1) air horn 21" long (1) air horn 24.5" long | $1,096 |
| 1110-0054 | Relocate air dryer to opposite the exhaust system inside the frame rails. | $280 |
| 1110-0055 | Air horns will alternate from driver to officer. | $417 |
| 1110-0056 | Air dryer Bendix ADIP. | $649 |
| 1110-0058 | Air horns recessed in bumper (PR) with bells behind bumper. | $921 |
| 1110-0066 | Air horns Grover recessed in front bumper. (1) air horn 21" long (1) air horn 24.5" long. | $1,285 |
| 1110-0077 | Recessed air outlet off isolated tank. Location: [#LOC]. | $388 |
| 1110-0082 | Air horns Grover model 2040 rectangular recessed in bumper (PR) with snow caps. | $1,116 |
| 1110-0090 | Air horns Grover recessed in bumper (PR) with snow caps. | $1,181 |
| 1110-0095 | Automatic moisture ejector heated. Wet tank only. | $189 |
| 1110-0097 | Automatic moisture ejector non-heated (EA). | $145 |
| 1110-0102 | Thomas 220 volt air compressor plumbed to air brake system. | $1,212 |
| 1110-0104 | Air horns Grover (1510) recessed in bumper (PR). Locate one each side outboard of frame. | $1,074 |
| 1110-0105 | Gast air compressor 120V/240V model 4HCC-10-M450X. | $1,301 |
| 1110-0106 | Air horns Grover recessed behind bumper (PR). Includes E-ONE grilles on bumper. | $1,270 |
| 1110-0109 | Air hose routed from the compressor to the dryer shall be upgraded to include stainless steel mesh for the full length of hose. | $82 |
| 1110-0111 | Gast air compressor 110v model 1HAB-10-M100X. | $1,029 |
| 1110-0112 | Martin-Horn No. 2297 GM. Includes set of (4) horns air compressor and snow caps for horns. Locate horns and compressor in cab. Horn compressor to be activated through switch in cab accessible to the driver. | $5,460 |
| 1110-0116 | Air horns Buell recessed in bumper (PR). | $1,092 |
| 1110-0117 | Air horns Grover model 2040 rectangular recessed in bumper (PR). | $1,116 |
| 1110-0118 | Inlet for air system. Includes weather proof box and Hubbel [#COL] cover. Location: [#LOC]. | $494 |
| 1110-0124 | Air horns Grover recessed behind bumper (PR). Includes grilles (No Logo) on bumper. | $1,270 |
| 1110-0125 | Gast air compressor 110v model 3HBB-32-M300AX with moisture filter. | $1,275 |
| 1110-0127 | Automatic moisture ejector heated. Air dryer only. | $189 |

| Item No. | Description | |
|---|---|---|
| 1110-0129 | Diamond plate flip cover for air inlet or outlet with label mounted in driver's door jamb. | $120 |
| 1110-0133 | Air dryer Haldex model N4253A. | $688 |
| 1110-0135 | Air horns shut-off valve. Located on driver side overhead console. | $114 |
| 1110-0136 | Air horns shut-off valve. Located on officer side overhead console. | $114 |
| 1110-0137 | Compression fittings for pump shift ipos. | $111 |
| 1110-0138 | Air horns Grover model 2040 rectangular behind bumper (PR). Includes E-ONE grilles. | $1,339 |
| 1110-0139 | Air dryer Bendix AD-SP. | $505 |
| 1110-0141 | Air inlet shut-off valve. Located adjacent to air inlet. | $114 |
| 1110-0143 | Diamond plate flip cover for air inlet or outlet with label mounted on officer's gravel shield. | $120 |
| 1110-0144 | Air outlet shut-off valve. Located adjacent to air outlet. | $114 |
| 1110-0147 | Recessed air outlet off isolated tank. Location: driver and officer side rear wheel well offset rearward. | $388 |
| 1125-0000 | Retarder Telma focal mounted. All four stages applied with brake application. Not available on tandem axle or four jack aerials. | $10,514 |
| 1125-0001 | Brake Jacob's exhaust | $784 |
| 1125-0002 | Jacobs engine compression brake. | $1,821 |
| 1125-0003 | Allison transmission retarder. Pre-select feature will be switched off with this option. | $12,459 |
| 1125-0006 | Driveline Mounted Telma Retarder. Standard switch location is on console manual lever on engine cover offset to driver's side. Cut off at 5 mph - 25% applied with throttle release & balance with brake application. | $10,514 |
| 1125-0007 | Tag located at Jacob Brake Controller. To read: Do Not Operate on Wet or Slippery Surfaces. | $83 |
| 1125-0012 | Driveline Mounted Telma Retarder. All four stages applied with brake application. | $10,514 |
| 1125-0013 | Lever control for Telma retarder. 5 position lever with low speed cutout. | $305 |
| 1125-0014 | Dual retarder operation. Engine Jacobs brake and transmission retarders to both be operable at the same time. Requires special approval. Option contingent on receiving formal approval from driveline component suppliers. | $126 |
| 1125-0015 | Relocate Jake Brake control to driver side of electrical access cover. | $415 |
| 1125-0019 | Driveline Mounted Telma Retarder. Stage 1 & 2 applied off throttle; stage 3 & 4 applied with brake application. | $10,514 |
| 1125-0020 | Jacobs engine compression brake. To be controlled only by a single on/off sw. | $1,821 |
| 1125-0021 | Driveline Mounted Telma Retarder to operate w/ 5 position lever within cab. 5 position lever sold separately. | $10,514 |
| 1125-0022 | Driveline Mounted Telma Retarder. Stage 1 applied off throttle; stage 2 3 & 4 applied with brake application. | $10,514 |
| 1125-0024 | Switch selector Jacobs compression brake / transmission retarder. Location and function: driver side overhead | $209 |
| 1125-0025 | Relocate Jacobs Brake control. Location: driver side of center dash upper tier. | $415 |
| 1150-0054 | Hinged diamond plate lid for driver side bumper tray. Includes 1/4 turn latch and gas shock hold open. | $282 |
| 1150-0055 | Hinged diamond plate lid for center bumper tray. Includes 1/4 turn latch and gas shock hold open. | $311 |
| 1150-0056 | Hinged diamond plate lid for officer side bumper tray. Includes 1/4 turn latch and gas shock hold open. | $282 |
| 1150-0059 | Red vinyl lid with velcro fasteners for bumper tray driver side. | $185 |
| 1150-0060 | Red vinyl lid with velcro fasteners for bumper tray officer side. | $185 |
| 1150-0061 | Red vinyl lid with velcro fasteners for bumper tray center. | $185 |
| 1150-0062 | Black vinyl lid with velcro fasteners for bumper tray driver side. | $185 |
| 1150-0063 | Black vinyl lid with velcro fasteners for bumper tray officer side. | $185 |
| 1150-0064 | Black vinyl lid with velcro fasteners for bumper tray center. | $185 |
| 1150-0065 | Diamond plate lid for driver center and officer hose trays. 5.25" high with dual chrome grab handles rubber hood latches and gas shocks. | $608 |
| 1150-0085 | Nylon black strap on officer side front bumper tray (EA). | $81 |
| 1150-0086 | Nylon black strap on driver side front bumper tray (EA). | $81 |
| 1150-0087 | Nylon black strap on center front bumper tray (EA). | $81 |
| 1150-0094 | Hinged diamond plate lid for driver side bumper tray. Includes D-Ring latch and gas shock hold open. | $309 |
| 1150-0095 | Hinged diamond plate lid for center bumper tray. Includes D-Ring latch and gas shock hold open. | $338 |
| 1150-0096 | Hinged diamond plate for officer side bumper tray. Includes D-Ring latch and gas shock hold open. | $309 |
| 1150-0097 | Tray driver side bumper outboard for hydraulic/cord reel. | $708 |
| 1150-0098 | Tray officer side bumper outboard for hydraulic/cord reel. | $708 |
| 1150-0100 | Hinged floor of center bumper tray. Hinged to the rear. | $781 |
| 1150-0102 | Diamond plate lid for driver hosetray. 5.25" high with chrome grab handle rubber hood latch gas shock and water stop angle. | $400 |

| Item No. | Description | |
|---|---|---|
| 1150-0103 | Diamond plate lid for center hose tray 5.25" high with chrome grab handle rubber hood latch gas shock and water stop angle. | $400 |
| 1150-0104 | Diamond plate lid for officer hosetray. 5.25" high with chrome grab handle rubber hood latch gas shock and water stop angle. | $400 |
| 1150-0105 | Diamond plate lid for center and driver hosetrays; 2/3 lid. 5.25" high with chrome grab handle rubber hood latches gas shocks and water stop angle. | $504 |
| 1150-0106 | Diamond plate lid for center and officer hosetrays; 2/3 lid. 5.25" high with chrome grab handle rubber hood latches gas shocks and water stop angle. | $504 |
| 1150-0107 | Nylon black strap with clip release on officer side front bumper tray. | $143 |
| 1150-0108 | Nylon black strap with clip release on driver side front bumper tray. | $143 |
| 1150-0109 | Nylon black strap with clip release on center front bumper tray. The strap shall be attached to the inboard side of | $143 |
| 1150-0111 | Additional divider for front bumper hose tray. | $108 |
| 1150-0112 | Hinged diamond plate lid for center bumper tray. Includes D-Ring latch and moon spring hold open. | $338 |
| 1150-0113 | Tray center of bumper with slats 34x11x14 for 150 feet of 1 3/4" double jacket hose for use with center bumper speaker option | $708 |
| 1150-0114 | Access cover in center bumper tray for center bumper mounted speaker. | $96 |
| 1150-0115 | Notch bumper tray lid for preconnected hose. Notch location: [#LOC]. | $140 |
| 1150-0116 | Bumper tray driver's side with slats 10 inches deep (approx 9 inches to slats). | $467 |
| 1150-0117 | Bumper tray driver's side with slats 12 inches deep (approx 11 inches to slats). | $467 |
| 1150-0118 | Bumper tray driver's side with slats 14 inches deep (approx 13 inches to slats). | $467 |
| 1150-0119 | Bumper tray center of bumper with slats 10 inches deep (approx 9 inches to slats). | $467 |
| 1150-0120 | Bumper tray center of bumper with slats 12 inches deep (approx 11 inches to slats). | $467 |
| 1150-0121 | Bumper tray center of bumper with slats 14 inches deep (approx 13 inches to slats). | $467 |
| 1150-0122 | Bumper tray officer's side with slats 10 inches deep (approx 9 inches to slats). | $467 |
| 1150-0123 | Bumper tray officer's side with slats 12 inches deep (approx 11 inches to slats). | $467 |
| 1150-0124 | Bumper tray officer's side with slats 14 inches deep (approx 13 inches to slats). | $467 |
| 1150-0125 | Divider center bumper hose tray running front to back with adjustable track (Provides two storage areas one left and one right of divider). | $245 |
| 1150-0126 | Divider center bumper hose tray running side to side with adjustable track (Provides two storage areas one ahead | $245 |
| 1150-0127 | Tray center of bumper with slats 34x13x16 with divider running side to side | $708 |
| 1150-0128 | Notch front bumper tray for speaker/Q2B/radar. Will reduce front hose/equipment load. Center tray only. | $126 |
| 1150-0129 | Diamond plate lid for center hosetray. Includes chrome grab handle rubber hood latches and gas shock. | $400 |
| 1150-0130 | Black nylon cargo net on center front bumper tray. | $305 |
| 1150-0131 | Extinguisher tube in front bumper extension. Location: [#LOC]. | $785 |
| 1150-0132 | Tray center bumper for hydraulic/cord reel. | $772 |
| 1150-0133 | Diamond plate raised full lid for extended front bumper. 6" high with dual chrome grab hands rubber hood latches and gas shocks. | $608 |
| 1150-0135 | Royal Blue vinyl lid with velcro fasteners for center bumper tray. | $185 |
| 1150-0136 | Bumper tray center of bumper with slats 16 inches deep (approx 15 inches to slats). Mount tray 1" above gravel | $557 |
| 1150-0137 | Diamond plate lid for center hosetray and jumpline next to tray. 5.25" high with chrome grab handle rubber hood latch gas shock and water stop angle if applicable. | $461 |
| 1150-0138 | Bumper pan driver's side without slats 4 inches deep with strap. For use with suction strainer only. | $467 |
| 1150-0139 | Nylon black strap with aluminum quick release buckle for front bumper hose tray. Strap to attach to front and rear walls of tray down low as applicable. Location: [#LOC]. | $117 |
| 1150-0140 | Bumper tray center of bumper with slats 14 inches deep (approx 13 inches to slats). Mount tray 1" above gravel shield. | $557 |
| 1150-0141 | Bumper tray officer's side with slats 12 inches deep (approx 11 inches to slats). Mount tray 1" above gravel shield. | $557 |
| 1150-0142 | Hinged diamond plate lid for center bumper tray. Includes (4) sides 1/4 turn latch and gas shock hold open. For use with raised compts only. | $399 |
| 1150-0143 | Hinged diamond plate lid for officer bumper tray. Includes (4) sides 1/4 turn latch and gas shock hold open. For use with raised compts only. | $399 |
| 1150-0144 | Diamond plate lid for center hosetray and jumpline next to tray. 8.25" high with chrome grab handle rubber hood | $522 |
| 1150-0145 | Single crosslay on top of the front bumper gravel shield. Tray to be "U" shape 10" wide x 8" high x the width of the gravel shield. Vinyl cover [#COL] with end flaps to cover crosslay velcro along front edge fastened along back. Requires 24" extension. | $856 |

| Item No. | Description | |
|---|---|---|
| 1150-0146 | Water stop angle. Gravel shield mounted. Requires raised lid and/or 28" bumper extension with reel trays. | $200 |
| 1150-0147 | Diamond plate lid for driver center and officer hose trays. 5.25" high with dual chrome grab handles SS butterfly latches and gas shocks. | $690 |
| 1150-0149 | Nylon black cargo net on sides for bumper crosslay. | $226 |
| 1150-0150 | Double crosslay on top of the front bumper gravel shield. Tray to be "U" shape approx 20" wide x 7.5" high x 90" wide minimum or as per application bumper width. Holds 200' of 1.75" DJ (each). Includes tri-fold diamond plate cover hinged at the front. Requires seperate side cover option and 28" extension. | $1,468 |
| 1150-0152 | Hinged diamond plate lid for officer side bumper tray. Includes D-Ring latch and gas shock hold open. | $309 |
| 1150-0153 | Bumper tray officer's side with slats located between front intake and frame extension. Tray to be approx 9" W (min) x full length x 14" D (13" to slats) to hold 25' of 5" LDH. Requires minimum 20" extension. | $467 |
| 1150-0154 | Bumper tray center of bumper with slats located to rear of Q2B. Tray to be approx 34"W x 9"L x 10" deep (9" to slats). | $677 |
| 1150-0158 | Bumper tray center of bumper without slats 12 inches deep. | $318 |
| 1150-0160 | Hinged smooth plate lid for center bumper tray. Includes D-Ring latch and gas shock hold open. Smooth plate lid will be painted with black Durabak. | $393 |
| 1150-0161 | Double crosslay on top of the front bumper gravel shield. Tray to be "U" shape to hold 200' of 1.75" DJ (each). Includes bi-fold diamond plate cover hinged at the rear. Requires separate side cover option and 28" extension. | $1,468 |
| 1150-0163 | Tray officer side bumper next to front intake/discharge. Half moon style for 25' of 5'' rolled hose. | $673 |
| 1150-0164 | Bumper tray center of bumper with black Turtle Tile 14" deep (approx. 13.25" from tile). Includes: hinged diamond plate lid for center bumper tray with Tri-Mark latch gas shock hold open and door ajar switch. | $963 |
| 1150-0165 | Bumper tray driver's side without slats 10 inches deep. | $399 |
| 1150-0166 | Bumper tray driver's side without slats 12 inches deep. | $399 |
| 1150-0167 | Bumper tray driver's side without slats 14 inches deep. | $399 |
| 1150-0168 | Bumper tray center of bumper without slats 10 inches deep. | $399 |
| 1150-0169 | Bumper tray center of bumper without slats 12 inches deep. | $399 |
| 1150-0170 | Bumper tray center of bumper without slats 14 inches deep. | $399 |
| 1150-0171 | Bumper tray officer's side without slats 10 inches deep. | $399 |
| 1150-0172 | Bumper tray officer's side without slats 12 inches deep. | $399 |
| 1150-0173 | Bumper tray officer's side without slats 14 inches deep. | $399 |
| 1150-0177 | Notch front bumper tray for speaker/Q2B. Will reduce front hose/equipment load. Driver's side only. | $126 |
| 1150-0178 | Hinged diamond plate lid for center bumper tray. Includes push button latch and gas shock hold open. | $311 |
| 1150-0179 | Bumper tray center of bumper without slats 16 inches deep. | $399 |
| 1150-0180 | Yellow vinyl lid with velcro fasteners for bumper tray center. | $185 |
| 1150-0181 | Nylon black strap with aluminum quick release buckle for front bumper hose tray. Strap to attach to side walls of tray down low as applicable. Location: [#LOC]. | $117 |
| 1150-0184 | Vinyl [#COL] side covers for diamond plate bumper crosslay cover. | $191 |
| 1150-0185 | Hinged diamond plate lid for center bumper tray. Includes push button latch and moon spring hold open. | $311 |
| 1150-0187 | Nylon yellow strap with aluminium quick release buckle for front bumper hose tray. Strap to attach to front and rear walls of tray down low as applicable. Location: [#LOC]. | $117 |
| 1150-0195 | Bumper tray center of bumper with black Turtle Tile 14" deep (approx. 13.25" from tile). | $467 |
| 1150-0196 | Tray officer side bumper next to front intake. Half moon style for 20' of 6" rolled hose. | $673 |
| 1150-0197 | Nylon black strap with aluminum quick release buckle. Location: driver officer and center top of front bumper gravel shield. | $348 |
| 1150-0198 | Notch front bumper tray for speaker/Q2B. Will reduce front hose/equipment load. Officer's side only. | $126 |
| 1150-0199 | Nylon black cargo net with bungee hold downs on sides for bumper crosslay. | $279 |
| 1150-0201 | Notch front bumper tray for speaker/Q2B. Notch to be sized as close to obstacle as possible to provide more storage space in tray. Will reduce front hose/equipment load. Center only. | $126 |

| Item No. | Description | |
|---|---|---|
| 1150-0202 | Bumper tray center of bumper with slats 12 inches deep (approx 11 inches to slats). The bumper tray shall be raised 2" above the gravel shield (12" total depth). The bumper tray shall be approximately 17" front to rear X 30" in length side to side. A divider shall be centered (spanning from front to back) making a left hand and right hand center bumper tray. | $467 |
| 1150-0203 | Hinged smooth plate lid for center bumper tray. Includes D-Ring latch and gas shock hold open. Smooth plate lid will be painted with black Scorpion coating. | $393 |
| 1150-0206 | Hinged diamond plate lid for center bumper tray. Includes push button latch chrome grab handle and gas shock hold open. | $360 |
| 1150-0207 | Hinged diamond plate lid for center bumper tray. Includes 1/4 turn latch and moon spring hold open. | $311 |
| 1150-0208 | Bumper tray officer's side without slats approximately 14 inches deep 17" front to rear X 9" in length side to side. | $467 |
| 1150-0209 | Bumper tray driver's side without slats approximately 14 inches deep 17" front to rear X 17" in length side to side. | $467 |
| 1150-0210 | Tray driver side bumper next to frame. Half moon style for 25' of 5'' rolled hose. | $673 |
| 1150-0211 | Bumper tray center of bumper with slats 16 inches deep (approx 15 inches to slats). Mount tray 1" above gravel shield. Forward bottom edge has 45 degree cut to improve approach angle. Forward cut height begins at approximate tray depth as it aligns with bumper bottom continuing rearward at a 45 degree angle. | $668 |
| 1150-0212 | Nylon black strap with clip release on officer side front bumper tray running front to back. | $143 |
| 1150-0213 | Bumper tray center of bumper (w/o slats) 10 inches deep. | $467 |
| 1150-0214 | Traffic cone storage on front bumper extension. Cones to be oriented downard through a 7 3/4" hole in the gravelshield. Includes nylon strap with aluminum buckle. Location: [#LOC]. | $386 |
| 1150-0215 | Hinged diamond plate lid for center bumper tray. Includes 1/4 turn latch and two (2) gas shock hold open. | $340 |
| 1150-0216 | Bumper tray lid(s) to be constucted using 3/16" aluminum ipos. | $149 |
| 1150-0217 | Hinged diamond plate lid for officer side bumper tray 2/3 of length hinged 1/3 remaining length is fastened in place. Hinged inboard/fixed portion outboard. Includes D-Ring latch and gas shock to hold open the hinged section. | $309 |
| 1150-0218 | Bumper tray center of bumper with slats 12 inches deep (approx 11 inches to slats). Mount tray 1" above gravel shield. | $557 |
| 1150-0219 | Additional gas shock on front bumper tray lid. Location: [#LOC]. | $160 |
| 1150-0220 | Tray driver side bumper outboard for hydraulic/cord reel 18 inches deep IPOS. | $862 |
| 1150-0221 | Tray officer side bumper outboard for hydraulic/cord reel 18 inches deep IPOS. | $862 |
| 1150-0223 | Bumper tray officer's side with slats 16 inches deep (approx 15 inches to slats). | $467 |
| 1150-0224 | Bumper tray officer's side without slats located between front intake and frame extension. Tray to be approx 9" W (min) x full length x 14" D (13" to slats) to hold 25' of 5" LDH. Requires minimum 20" extension. | $399 |
| 1150-0225 | The rear wall of bumper tray to have louvers for additional ventilation. Location: [#LOC]. | $182 |
| 1150-0226 | Smooth plate raised full lid with black Durabak finish for extended front bumper. 6" high with dual chrome grab hands rubber hood latches and gas shocks. | $1,491 |
| 1150-0228 | Bumper tray driver's side of bumper with black Turtle Tile 14" deep (approx. 13.25" from tile). | $467 |
| 1150-0230 | Bumper trough full length mounted on top of gravel shield. Trough shall run side to side 4" high 7" wide made from 3/16" smooth plate aluminum. | $250 |
| 1150-0231 | Nylon black strap with aluminum quick release buckle for front bumper hose tray. Strap to attach to front and rear walls of tray as high as possible. Location: [#LOC]. | $117 |
| 1150-0232 | Hinged diamond plate lid for center bumper tray. Includes Tri-Mark latch and gas shock hold open. | $416 |
| 1150-0233 | Hinged smooth plate lid for driver side bumper tray. Includes D-Ring latch and gas shock hold open. Lid to painted with black Scorpion brand coating inside and outside surfaces (smooth finish). | $411 |
| 1150-0234 | Bumper tray driver's side with slats 10 inches deep (approx 9 inches to slats). Tray interior to be painted with black Scorpion coating (smooth finish) Slat assembly to remain unpainted aluminum. | $570 |
| 1150-0235 | Diamond plate lid 3/16 " thick for driver center and officer hose trays. 5.25" high with dual chrome grab handles SS butterfly latches and gas shocks. | $751 |
| 1150-0236 | Recessed bumper double crosslay to hold of 200' of 1.75" DJ hose in each crosslay. The crosslay floor/bottom shall be slotted to allow drainage (no slats). Includes hinged bi-fold raised lid in center with outboard fixed panels for optional equipment and stainless steel scuff guards at each side of crosslay opening across bottom and sides. Requires 28" extension side covers 12" heavy duty bumper and engineering approval. | $3,802 |

| Item No. | Description | |
|---|---|---|
| 1150-0237 | Bumper tray driver's side without slats. Tray to be approx 17.5" W x 17"L x 14" D. | $399 |
| 1150-0238 | Bumper tray officer's side without slats. Tray to be approx 11" W x 17"L x 14" D. | $399 |
| 1150-0239 | Bumper trays shall have 1/2" drain holes IPOS. | $28 |
| 1150-0241 | Bumper tray center of bumper with slats 14 inches deep (approx 13 inches to slats) fabricated from smooth plate aluminum. Outside facing surface of tray below bumper shall be painted black Durabak. | $558 |
| 1150-0242 | Black nylon cargo net on officer side front bumper tray. | $305 |
| 1150-0243 | Bumper tray officer's side with slats 10 inches deep (approx 9 inches to slats). Mount tray 2" above gravel shield. | $557 |
| 1150-0245 | Bumper tray driver's side with slats 10 inches deep (approx 9 inches to slats). Mount tray 2" above gravel shield. | $557 |
| 1150-0247 | Hinged diamond plate lid raised 3" high for center bumper tray. Includes a single chrome grab handle SS butterfly latches and gas shocks. | $379 |
| 1150-0248 | Divider driver side bumper hose tray running side to side with adjustable track (Provides two storage areas one ahead and one behind divider). | $245 |
| 1150-0249 | Divider officer side bumper hose tray running side to side with adjustable track (Provides two storage areas one ahead and one behind divider). | $245 |
| 1150-0250 | Single crosslay on top of the front bumper gravel shield. Tray to be "U" shape approx 10" wide x 7.5" high x 90" wide. Holds 200' of 1.75" DJ (each). Includes diamond plate cover hinged at the front. Requires seperate side cover and 24" extension. | $1,150 |
| 1150-0253 | Black nylon cargo net on driver side front bumper tray. | $305 |
| 1150-0254 | Bumper tray driver side of bumper with slats 14 inches deep (approx 13 inches to slats) fabricated from smooth plate aluminum. Mount tray 2" above gravel shield. Outside facing surface of tray below bumper shall be painted black Durabak. | $650 |
| 1150-0255 | Hinged smooth plate lid for driver side bumper tray. Includes D-Ring latch and gas shock hold open. Smooth plate | $393 |
| 1150-0256 | Bumper tray(s) to be constructed using smooth plate aluminum with exterior surface painted black Durabak. | $186 |
| 1150-0258 | Recessed bumper double crosslay to hold of 200' of 1.75" DJ hose in each crosslay. The crosslay floor/bottom shall be slotted to allow drainage (no slats). Includes hinged bi-fold raised lid in center with outboard fixed panels for optional equipment and stainless steel rollers at each side of crosslay opening across bottom and sides. Requires 28" extension side covers 12" heavy duty bumper and engineering approval. | $3,954 |
| 1150-0259 | Bumper tray with no slats approx. 6" deep extending full width of the bumper as applicable based on outboard options. Includes notched frame extensions to provide flat floor for the tray. | $869 |
| 1150-0261 | Diamond plate lid for driver center and officer hose trays. approx 6.25" high or as applicable to allow for jumpline swivel to be under lid pre-connected. with dual chrome grab handles SS butterfly latches and gas shocks. | $732 |
| 1150-0264 | Recessed bumper double crosslay to hold 200' of 1.75" DJ hose in each crosslay with a nozzle as applicable. The crosslay floor/bottom shall be slotted to allow drainage (no slats). Includes hinged bi-fold full width raised lid for open full access to crosslays when open and stainless steel scuff guards at each side of crosslay opening across bottom and sides. Requires 28" extension side covers 12" heavy duty bumper and engineering approval. Lid shall be raised approx 5.25" above top of bumper for capacity to ensure ease of use with a nozzle. Lid to be secured in closed position with S/S Butterfly latches. Capacity may be affected and may require a compact nozzle depending on hose selection as loaded. | $4,007 |
| 1150-0266 | Smooth plate raised full lid with black Durabak finish for extended front bumper. 6" high with one 24" Haralson Metals Stainless knurled handrail in place of grab handles centered on the lid butterfly latches on side and gas shocks. | $1,542 |
| 1150-0269 | Bumper tray to be constucted using 3/16" aluminum ipos. | $104 |
| 1150-0270 | Tray officer side bumper next to frame. Half moon style for (3) 50' sections of 1.5'' rolled hose. | $673 |
| 1150-0271 | Tray driver side bumper next to frame. Half moon style for (6) 50' sections of 1'' rolled hose. | $673 |
| 1150-0272 | Raised lid over bumper tray to be extended over jumpline swivel on top of gravel shield. For use with 2" swivel only. | $60 |
| 1150-0273 | Nylon black cargo net with black powder coated quick release buckles on sides for bumper crosslay. | $328 |
| 1150-0275 | Hinged smooth plate lid for center bumper tray. Includes 1/4 turn latch and gas shock hold open. Smooth plate lid will be painted black Durabak. | $388 |
| 1150-0276 | Nylon black strap with aluminum quick-release buckle. Location: driver officer and (2) center top of front bumper gravel shield. | $467 |

| Item No. | Description | |
|---|---|---|
| 1150-0280 | Bumper tray center of bumper with slats 17 inches deep (approx 16 inches to slats). Mount tray 1" above gravel shield. Exterior of tray to be painted FLNA4145 Black. | $897 |
| 1150-0281 | Hinged diamond plate lid for driver side bumper tray. Includes D-Ring latch and moon spring hold open. | $338 |
| 1150-0282 | Hinged diamond plate lid for center bumper tray. Includes Southco model C2-32-11-3 push button latch and gas shock hold open. | $311 |
| 1150-0283 | Hinged diamond plate lid for center and officer bumper tray. Includes (2) D-Ring latches (2) gas shock hold open and smooth plate spacer between bumper trays. | $646 |
| 1150-0284 | Nylon black strap with aluminum quick release buckle. Location: driver officer and center top of front bumper | $348 |
| 1150-0286 | Shallow bumper tray located center of the bumper without slats. Tray to be as wide and as deep as possible while maintaining a flat floor without notches or protrusions. | $317 |
| 1150-0287 | Hinged diamond plate lid for officer side bumper tray. Includes D-Ring latch and moon spring hold open. | $338 |
| 1150-0288 | Bumper tray secondary. Tray located towards the rear beneath first center tray for additional storage. Tray to be as long front to back as possible while maintaining a flat floor without notches or protrusions and still have the | $416 |
| 1150-0289 | Diamond plate lid for driver center and officer hose trays. 5.25" high with dual chrome grab handles SS butterfly latches and gas shocks. Hinge will be located as low down and far back as possible on fixed portion of the lid. | $690 |
| 1150-0290 | All fabricated aluminum sheet metal parts installed on the bumper shall be made using smooth plate in place of standard. Includes gravel shield tray(s) lid(s) and other miscellanous parts. | $186 |
| 1150-0293 | Bumper tray driver side of bumper made as large as possible with slats 14 inches deep (approx 13 inches to slats). | $660 |
| 1150-0294 | Insulation on exterior of the bumper tray assembly. Location: Driver side. | $242 |
| 1150-0296 | Hinged diamond plate lid for officer bumper tray. Includes Tri-Mark latch and gas shock hold open. | $416 |
| 1150-0297 | Bumper tray driver side of bumper made as large as possible without slats 14 inches deep. Mount tray 1" above gravel shield. | $660 |
| 1150-0298 | Bumper tray center of bumper without slats 14 inches deep. Mount tray 1" above gravel shield. | $557 |
| 1150-0299 | Tray officer side bumper inboard of frame. Half moon style for 25' of 5'' rolled hose. | $673 |
| 1150-0300 | Bumper tray driver's side with slats 16 inches deep (approx 15 inches to slats). | $467 |
| 1150-0302 | Raised diamond plate lid with dual chrome grab handles stainless steel butterfly latches and gas shocks. The lid shall be full width (as applicable based on outboard options) and high enough to accomodate reels rescue tools and equipment as applicable per customer specific requirements. | $690 |
| 1150-0303 | Nylon black strap with aluminum quick release buckle for front bumper hose tray. Strap to attach to front and rear top of tray. Location: [#LOC]. | $117 |
| 1150-0307 | Bumper tray center of bumper with slats 16 inches deep (approx 15 inches to slats). Mount tray 2" above gravel shield. | $557 |
| 1150-0308 | Removable recessed lid for front bumper tray. Includes hand hole cutout for ease of removal to access. See drawing for specific customer location requirements. Finish: Sanded Aluminum. | $281 |
| 1150-0309 | Hinged smooth plate lid with DA finish for center bumper tray. Includes 1/4 turn latch and gas shock hold open. | $311 |
| 1150-0312 | Bumper tray full width of bumper (for use with outboard options) without slats approx. 6" inches deep outboard of frame rails and 12" deep center between rails. Outboard sides raised for airhorns. | $1,116 |
| 1150-0315 | Hinged diamond plate lid for single center/driver bumper tray. Includes (2) push button latches and (2) gas shock hold opens. | $503 |
| 1155-0002 | Winch electric front mounted Ramsey 12000 lb. Includes access door with quarter turn latch and spring hold open device. | $4,174 |
| 1155-0003 | Winch Warn Series 8 - 8000lb with 125' 3/8" plated cable. | $3,584 |
| 1155-0005 | Winch Warn Series 12 12000 lb. with 125' 3/8" plated cable. Includes access door with quarter turn latch and spring hold open device. Locate: Mounted to the chassis frame extension centered at the front bumper area. | $5,249 |
| 1155-0013 | Winch Warn Series 12 12000 lb. with 125' 3/8" plated cable. Includes access door hinged rearward that is smooth plate alum (IPO tread) and painted with black Scorpion brand coating inside and outside surfaces (smooth finish). Latch to be D-Ring style (IPO std. 1/4 turn latch). Lid to have 1 gas shock. | $5,380 |
| 1155-0014 | A 6000 lb Warn multi-mount (portable) electric reversible winch with 125' of 3/8'' plated wire rope and a replaceable clevis hook shall be installed and shall be controlled with a 12' remote control switch. Includes rollers. | $2,292 |

| Item No. | Description | |
|---|---|---|
| 1155-0018 | Winch Warn Series 12-S Spydura Pro 12000 lb. with 100' of 7/16" synthetic rope and Hawse fairlead. Includes access door with quarter turn latch and spring hold open device. | $5,866 |
| 1155-0019 | Winch Warn Series 12 12000 lb. Includes 100' 7/16" Spydura Pro synthetic rope fairlead & 32' remote. Locate: Mounted to the chassis frame extension centered at the front bumper area. A service access to the winch shall be provided. | $5,644 |
| 1155-0021 | Warn Winch 9000 lb. with 125' 3/8" plated cable. Includes access door with quarter turn latch and spring hold open device. Locate: Mounted to the chassis frame extension centered at the front bumper area. | $3,064 |
| 1160-0000 | Bumper 10" stainless steel. | $1,306 |
| 1160-0001 | Bumper 12" high swept back stainless steel. | $1,477 |
| 1160-0002 | Bumper reinforcement backing. For use with 10" SS or heavy duty bumpers only. | $464 |
| 1160-0008 | 3/16" Front Bumper Gravel Shield. | $133 |
| 1160-0012 | 12" Front Bumper Gravel Shield Extension. | $148 |
| 1160-0013 | 16" Front Bumper Gravel Shield Extension. | $282 |
| 1160-0014 | 20" Front Bumper Gravel Shield Extension. | $501 |
| 1160-0015 | 24" Front Bumper Gravel Shield Extension. | $663 |
| 1160-0016 | 28" Front Bumper Gravel Shield Extension. | $802 |
| 1160-0020 | License plate holder mounted center of front bumper. | $41 |
| 1160-0021 | Number plate removable size to fit between air horns on front bumper. Spaced out from face of bumper so plate can be removed. | $180 |
| 1160-0030 | Steel tow bar located below front bumper mounted to chassis extensions for towing purposes only painted black. | $1,884 |
| 1160-0031 | Notch front bumper for low "S" type front intake. Includes tray below pipe extending from cab to bumper. | $1,110 |
| 1160-0034 | 8" Front Bumper Extension. | $148 |
| 1160-0041 | Heavy duty front bumper 10" high with full wrap around. To be painted job color. | $2,291 |
| 1160-0042 | Heavy duty front bumper 10" high with full wrap around. To be painted 767681 EG black. | $2,291 |
| 1160-0049 | License plate holder mounted officer side of front bumper. | $41 |
| 1160-0050 | 12" heavy duty front bumper with full wrap around. To be painted L0318EG metallic silver. | $2,291 |
| 1160-0051 | 3/16" Front Bumper Gravel Shield. Smooth plate painted with black Durabak. | $1,374 |
| 1160-0052 | Recessed winch receiver in front bumper for model QM5000 portable winch. Includes swing down front center section of bumper for winch access bumper reinforcement winch enclosure raised lid and port winch wiring. For use on E-ONE chassis with 10" high 28'' ext bumper only. | $4,966 |
| 1160-0053 | 14" Front Bumper Gravel Shield Extension. | $216 |
| 1160-0054 | Overlay front heavy duty bumper with diamond plate panels. | $392 |
| 1160-0055 | Guard straps for bumper mtd recessed Q2B - polished stainless steel. | $313 |
| 1160-0057 | Rear bumper steel with dia plt overlay. Includes rubrail across rear surface and no step tags. | $1,561 |
| 1160-0060 | Dock bumpers (4) on front bumper equally spaced (as applicable). | $311 |
| 1160-0061 | 10" heavy duty front bumper with full wrap around. To be painted L0318EG metallic silver. | $2,291 |
| 1160-0062 | Rear bumper steel 8" deep with Gator Grip dia plt overlay. Includes rubrail across rear surface and handrail located below hosebed. | $1,958 |
| 1160-0064 | Heavy duty front bumper 10" high with full wrap around. To be painted [#COL]. | $2,291 |
| 1160-0065 | Heavy duty front bumper 10" high with full wrap around. Center of bumper to have a 5" deep notch for recessed Q2B. Bumper to be painted job color. | $2,843 |
| 1160-0066 | License plate holder mounted driver side of front bumper. | $41 |
| 1160-0068 | 1/8" Front Bumper Gravel Shield. Smooth plate painted with black Durabak. | $1,374 |
| 1160-0084 | Heavy duty 12" front bumper with full wrap around. To be painted job color. | $2,291 |
| 1160-0094 | 18" Front Bumper Gravel Shield Extension. | $393 |
| 1160-0095 | Heavy duty front bumper with full wrap around. To be painted FLNA 91733 silver. | $2,291 |
| 1160-0103 | Rear bumper steel 8" deep with Gator Grip dia plt overlay. Includes rubrail across rear surface and handrail located horizontally below turntable access door. | $1,958 |
| 1160-0104 | Swing down front section of bumper. 10" front bumper only. Requires extended front bumper and bumper reinforcement. | $1,188 |
| 1160-0108 | 3/16" Front Bumper Gravel Shield. Smooth plate painted with black Scorpion coating. | $1,374 |
| 1160-0116 | Heavy duty front bumper 10" high with full wrap around. Driver side of bumper to have a 5" deep notch for recessed Q2B. Bumper to be painted job color. | $2,843 |
| 1160-0117 | License plate holder mounted driver side of front bumper. | $41 |
| 1160-0120 | 1/8" Front Bumper Gravel Shield. Includes 1" return break on each side of heavy duty bumper. | $162 |
| 1160-0121 | Diamond plate lower gravelshield. Located under side of the front bumper extension. | $781 |
| 1160-0122 | 20" Front Bumper Gravel Shield Extension. The extension shall extend further forward and each side to align with the edge of the bumper. | $574 |

| Item No. | Description | |
|---|---|---|
| 1160-0123 | 10 GA brushed stainless steel overlay on front face of 12" heavy duty bumper. | $604 |
| 1160-0124 | Heavy duty 12" front bumper with full wrap around. To be painted the same as the upper area two tone job color. | $2,291 |
| 1160-0125 | Heavy duty front bumper 10" high with full wrap around. Officer side of bumper to have a 5" deep notch for recessed Q2B. Bumper to be painted job color. | $2,843 |
| 1160-0129 | License plate holder hinge mounted below center of front bumper. | $81 |
| 1160-0130 | Rear bumper steel 8" deep with Gator Grip dia plt overlay and angled (Boston style) style corners. Includes rubrail | $2,096 |
| 1160-0131 | 1/8" Front Bumper Gravel Shield for heavy duty bumper. Includes 1" turn down around perimeter of HD bumper. | $219 |
| 1160-0133 | Heavy duty front bumper 10" high with full wrap around. Center of bumper to have a 5" deep notch for recessed Q2B. Bumper to be painted 2-tone job color. | $2,843 |
| 1160-0136 | Bumper guide pinned (PR). | $512 |
| 1160-0137 | Heavy duty 12" front bumper with full wrap around. To be painted [#COL]. | $2,291 |
| 1160-0138 | 3/16" Front Bumper Gravel Shield. Extend shield to flush with heavy duty bumper edge. | $544 |
| 1160-0140 | 3/16" Front Bumper Gravel Shield for heavy duty bumper. Includes 1" turn down around perimeter of HD bumper. | $350 |
| 1160-0141 | 3/16" Front Bumper Gravel Shield with 1" turn down lips to protect the top edge of the heavy duty bumper from damage. Smooth plate painted with black Durabak. | $1,426 |
| 1160-0144 | Heavy duty 12" front bumper with full wrap around. Center of the bumper to be extended (boxed out) for Q2B to be recessed without intruding into the bumper trays recessed crosslays or any other options as applicable. To be painted [#COL]. | $2,964 |
| 1160-0145 | Notch front bumper for low "S" type front intake. 10" deep tray below pipe extending from cab to bumper to hold at minimum 25' of 5" LDH. Include nylon strap (seat belt type) for tray. | $1,964 |
| 1160-0147 | Heavy duty front bumper 10" high with full wrap around. To be constructed of 110000 PSI frame rail material and painted job color. | $3,435 |
| 1160-0148 | Smooth aluminum plate with gold Scotchlite centered on front bumper. 6" x 36" with radius corners. | $229 |
| 1160-0149 | LINE-X bumper package: Includes all visible diamond plate surfaces including gravel shield exterior surface of trays and lids(flat or raised). If equipped exterior of the fabricated booster reel housing fabricated box for booster reel rollers and winch access door shall be included in this package. | $922 |
| 1160-0152 | Rear bumper with 3" square bolt-on stainless steel tube for rear guard. Includes no step tags. No rub rail or cover plate and rear marker lts attached to lower rear body surface. Note rear bumper to be exposed as natural surface un-painted. | $2,182 |
| 1160-0153 | Heavy duty front bumper 10" high with full wrap around for commercial chassis. Center of bumper to have a 5" deep notch for recessed Q2B. Bumper to be painted job color. To include one piece modular mounting bracket for commercial chassis with welded integral front frame extension mounting rails for added durability and strength. | $3,553 |
| 1160-0154 | Heavy duty front bumper 12" high with full wrap around. Driver side of bumper to have a 5" deep notch for recessed Q2B. Bumper to be painted job color. | $2,843 |
| 1160-0155 | LINE-X bumper: The bottom lip of the bumper shall have LINE-X finish. | $214 |
| 1160-0156 | Durabak Black bumper package: Includes all visible plate surfaces including gravel shield exterior surface of trays and lids(flat or raised). If equipped exterior of the fabricated booster reel housing fabricated box for booster reel rollers and winch access door shall be included in this package. | $922 |
| 1160-0157 | Heavy duty front bumper 10" high with full wrap around. Center of bumper to have a 5" deep notch for recessed Q2B. Corners to be tapered 8"x8". (Not available with reel trays). Bumper to be painted job color. | $3,040 |
| 1160-0158 | Heavy duty 12" front bumper with full wrap around. Corners to be tapered 8"x8". (Not available with reel trays). To be painted job color. | $2,488 |
| 1160-0159 | 30" Front Bumper Gravel Shield Extension. | $962 |
| 1160-0160 | Rear bumper steel 8" deep with Gator Grip dia plt overlay and angled (Boston style) style corners. Includes rubrail across rear surface and (2) 10" handrails located vertically at rear of body. | $2,096 |
| 1160-0161 | Diamond plate overlay on the sides and angled corners of heavy duty bumper. | $345 |
| 1160-0163 | Rear bumper with 4" square steel tube for rear guard. Includes no step tags. No rub rail or cover plate and rear marker lts attached to lower rear body surface. Note rear bumper to be painted job color with Boston style corners cut at 30 degree angle on each end. | $2,182 |
| 1160-0164 | Heavy duty inner city front bumper 10" high with full angle corners. Includes support wings for angled corners. Center of bumper to have a 5" deep notch for recessed Q2B. Bumper to be painted job color. | $3,139 |

| Item No. | Description | |
|---|---|---|
| 1160-0165 | Heavy duty front bumper 10" high with full wrap around. Officer side notched for front intake recessed as much as possible. Bumper to be painted job color. | $3,040 |
| 1160-0166 | 26" Front Bumper Gravel Shield Extension. | $732 |
| 1160-0167 | Heavy duty 12" front bumper with full wrap around. Center of bumper to have a 5" deep notch for recessed Q2B. Officer side notched for front intake recessed as much as possible. Corners to be tapered 8"x8". To be painted job color. | $3,386 |
| 1160-0168 | Heavy duty bumper wrap around lower edge guard. Extends from bottom of stripe to bottom of bumper. | $267 |
| 1160-0169 | Heavy duty 12" front bumper with full wrap around. Driver side of bumper to have a 5" deep notch for recessed Q2B. Officer side notched for front intake recessed as much as possible. Corners to be tapered 8"x8". To be painted job color. | $3,386 |
| 1160-0170 | 3/16" Front Bumper Gravel Shield with 1" turn down lip. Smooth plate painted with LINE-X. | $1,272 |
| 1160-0171 | Heavy duty 12" front bumper with full wrap around. Driver side of bumper to have a 5" deep notch for recessed Q2B. Officer side notched for front intake recessed as much as possible. To be painted job color. | $3,386 |
| 1160-0172 | Rear bumper steel 8" deep with Gator Grip dia plt overlay and angled (Boston style) style corners. Includes a 4" | $2,096 |
| 1160-0173 | Rear bumper steel 8" deep with Gator Grip dia plt overlay. Includes a 4" square steel tube and additional bracing for support rubrail across rear surface (if applicable) and handrail located below hosebed. | $1,958 |
| 1160-0175 | Zinc flame spray coating for heavy duty front bumper (outside and inside surfaces) prior to painting. | $478 |
| 1160-0176 | 3/16" smooth plate front bumper gravel shield with DA finish. | $133 |
| 1160-0177 | Heavy duty 10" front bumper with full wrap around. Corners to be tapered 8"x8". (Not available with reel trays). To be painted job color. | $2,483 |
| 1160-0178 | Heavy duty inner city front bumper 10" high with full angle corners. Includes support wings for angled corners. Driver side of bumper to have a 5" deep notch for recessed Q2B. Officer side of bumper to have notch for front suction. Bumper to be painted job color. | $3,715 |
| 1200-0018 | T handle transmission selector. | $1,562 |
| 1200-0020 | TransSynd synthetic transmission fluid for EVS3000. | $196 |
| 1200-0021 | TransSynd synthetic transmission fluid for EVS 4000. | $308 |
| 1200-0062 | The engine oil and transmission dip sticks to have tags. Tags to be attached to each by cable. Use colored tag to match dip stick color. | $156 |
| 1200-0063 | The engine oil dipstick to have yellow handle and the transmission dipstick to have a red handle. | $222 |
| 1200-0077 | Transmission re-programming. ''D'' allows trans to shift from 1st - 3rd gear and ''Mode'' allows 4th gear. | $691 |
| 1200-0083 | Transmission re-programming. ''D'' allows transmission to shift from 1st - 4th gear and ''Mode'' allows 5th gear. | $691 |
| 1200-0115 | Polyurethane engine mounts. Cummins engines only. | $112 |
| 1200-0310 | Eng/Trans Cummins ISL 350HP/EVS3000 2016 EPA compliant engine. | $82,706 |
| 1200-0311 | Eng/Trans Cummins ISL 380HP/EVS3000 2016 EPA compliant engine. | $90,840 |
| 1200-0312 | Eng/Trans Cummins ISL 400HP/EVS3000 2016 EPA compliant engine. | $96,262 |
| 1200-0313 | Eng/Trans Cummins ISL 450HP/EVS3000 2016 EPA compliant engine. | $97,093 |
| 1200-0315 | Eng/Trans Cummins ISX12 400HP with EVS4000 transmission. 2016 EPA Compliant. | $123,367 |
| 1200-0316 | Eng/Trans Cummins ISX12 450HP with EVS4000 transmission. 2016 EPA Compliant. | $124,875 |
| 1200-0317 | Eng/Trans Cummins ISX12 500HP with EVS4000 transmission. 2016 EPA Compliant. | $126,382 |
| 1200-0318 | Eng/Trans Cummins ISX12 500HP with EVS4500 transmission. 2016 EPA Compliant. | $128,326 |
| 1200-0319 | Eng/Trans Cummins ISX15 550HP with EVS4000 transmission. 2016 EPA Compliant. | $133,311 |
| 1200-0320 | Eng/Trans Cummins ISX15 550HP with EVS4500 transmission. 2016 EPA Compliant. | $135,254 |
| 1200-0321 | Eng/Trans Cummins ISX15 600HP with EVS4000 transmission. 2016 EPA Compliant. | $136,622 |
| 1200-0322 | Eng/Trans Cummins ISX15 600HP with EVS4500 transmission. 2016 EPA Compliant. | $138,565 |
| 1200-0328 | Eng/Trans Cummins ISX15 455HP with EVS4000 transmission. 2016 EPA Compliant. | $129,649 |
| 1200-0332 | Transmission re-programming. ''D'' allows transmission to shift from 1st - 5th gear and ''Mode'' allows 6th gear overdrive. Requires overdrive option. | $691 |
| 1200-0345 | Eng/Trans Cummins X15 605HP with EVS4000 transmission. 2017 EPA Compliant. | $136,622 |
| 1225-0005 | Exhaust heat shield. Locate below compartment floor. | $190 |
| 1225-0006 | Exhaust tip stainless steel for Plymovent. For exhaust extraction system. | $358 |
| 1225-0008 | Wrap exhaust with heat tape from the turbo down to the flex pipe. Inspect after install for tears in material. Wrap outside with wire mesh to ensure material remains affixed. | $854 |
| 1225-0009 | Anchor plate for Nederman exhaust system. For use with standard nozzle. Ship Loose. | $267 |

| Item No. | Description | |
|---|---|---|
| 1225-0012 | Ward No Smoke Exhaust System. | $17,793 |
| 1225-0013 | Tailpipe support. Locate between tailpipe and body approx 10" in from edge of body. | $540 |
| 1225-0014 | Exhaust driver side custom chassis. | $631 |
| 1225-0020 | Exhaust tip MagneGrip. For exhaust extraction system. Tip to protrude appox. 2" outside of body (Not rubrail). | $656 |
| 1225-0021 | Cover exhaust with blanket from the turbo down to the flex pipe (as applicable). Visually inspect after install for tears in material. | $303 |
| 1225-0024 | Plymovent Grabber magnetic exhaust end. Bolt-on for exhaust extraction system. | $438 |
| 1225-0026 | Vertical exhaust rain cap chrome. | $91 |
| 1225-0027 | Vertical exhaust officer side. This will include the vertical exhaust support. Aerial vertical exhaust to be plumbed through (internal) right rear of pump module. Top of pipe to turn out. | $2,468 |
| 1225-0031 | Wrap exhaust with heat tape from the turbo down to the muffler. Visually inspect after install for tears in material. Wrap outside with wire mesh to keep material from coming off. | $904 |
| 1225-0033 | Exhaust diverter. Diverts exhaust from officer side to driver side. Includes well labeled switch accessible to driver. | $5,484 |
| 1225-0035 | Exhaust end for Plymovent. For exhaust extraction system. Exhaust to be angled rearward to allow for possible deflection if impacted. | $487 |
| 1225-0039 | Modify the tailpipe to discharge straight out of a side panel located below R1 compartment but above the bottom edge of the body. Exhaust tip to be MagneGrip for exhaust extraction system. . | $987 |
| 1225-0042 | Firwin exhaust blanket from the turbo down to the DPF. Includes shield over DPF. | $722 |
| 1225-0043 | Exhaust end for Plymovent. For exhaust extraction system. Set back approx. 4" from exhaust end. Includes "Caution Hot" label above exhaust on side of body. | $297 |
| 1225-0048 | Exhaust outlet cooling tip. | $242 |
| 1225-0051 | Exhaust diverter. Diverts exhaust from officer side to vertical. Includes well labeled switch accessible to officer. | $5,484 |
| 1225-0053 | Firwin exhaust blanket from the turbo down to the DPF. | $873 |
| 1225-0054 | Locate exhaust end 3" below rubrail extending 2" past rubrail. | $245 |
| 1225-0056 | Re-route vertical exhaust to below body. Includes heat wrap as necessary. Metro 100 only. | $1,257 |
| 1225-0057 | Nederman exhaust transmitter on cab dash. Wired through engine run. | $1,092 |
| 1225-0059 | Ward No Smoke 2 Exhaust System. | $17,793 |
| 1225-0060 | Exhaust end with fresh air vent for Plymovent exhaust extraction system. | $525 |
| 1225-0063 | Wrap exhaust with thermal insulation tape from the turbo down to the DPF (not including flex pipe if equipped). Includes S/S tie wraps. | $236 |
| 1250-0003 | Frame 10.25 x 3.5 x .375 chassis. | $5,672 |
| 1250-0004 | Frame - Torque box for HP95 Mid-Mount aerial. | $21,290 |
| 1250-0005 | Frame - Torque box for tandem axle RM aerial. | $21,955 |
| 1250-0006 | Frame liner 9.375 x 3.125 x .375. | $3,123 |
| 1250-0009 | Frame - Torque box for Tiller. | $73,870 |
| 1250-0014 | Frame - Torque box for HP100 platform. | $28,476 |
| 1250-0025 | Frame 12 x 3.5 x .375 chassis. | $5,672 |
| 1250-0026 | Frame liner 11.125 x 3.125 x .375. | $3,475 |
| 1250-0027 | Frame - Torque box for tandem axle RM aerial with no waterway pipe. | $19,991 |
| 1250-0029 | Torque box modifications to allow for Hendrickson FIREMAAX tandem air ride suspension (for use with HM100/110 and HP100). | $1,721 |
| 1250-0061 | Frame liner "L" 8.875 x 3.125 x .375. | $2,898 |
| 1250-0062 | Frame - Torque box for HP100 platform with 6" w/way pipe. For use with industrial applications only. | $30,857 |
| 1250-0063 | Frame - Torque box for single axle RM aerial. | $20,148 |
| 1250-0064 | Frame - Torque box for HP100 platform with 5" w/way pipe. For use with 2000 GPM waterway flow. May affect ground ladder storage in tunnel. | $30,767 |
| 1250-0067 | Chassis frame rails shall be zinc plated (galvanized) IPOS. Includes rear subframe rails (if applicable). | $2,038 |
| 1250-0068 | Chassis frame rails front frame extensions rear subframe (Urban Interface) crossmembers and battery brackets shall be zinc plated (galvanized) IPOS. | $4,926 |
| 1250-0070 | Chassis frame liner shall be zinc plated (galvanized) IPOS. | $522 |
| 1250-0071 | Frame - Formed torque box for HP95 Mid-Mount aerial. | $21,290 |
| 1250-0072 | Torque box modifications to allow for Hendrickson FIREMAAX tandem air ride suspension (for use with CR100/137 95-Platform and HP100 Platform). | $3,043 |
| 1250-0073 | Frame - Formed torque box for HP95 Mid-Mount aerial. Includes 12" high rails below cab. | $21,290 |
| 1250-0075 | Forward outriggers on torque box shifted forward 10". | $515 |
| 1250-0076 | Rear underbody support frame. Includes zinc plated (galvanized) IPOS. | $1,413 |
| 1250-0077 | Frame - Torque box for HP100 platform with no waterway pipe. | $26,512 |

| Item No. | Description | |
|---|---|---|
| 1250-0080 | Frame assembly with 10.25 x 3.5 x .375 powder coated galvanized rails. | $5,672 |
| 1250-0081 | Frame assembly with 12 x 3.5 x .375 powder coated galvanized rails. | $5,672 |
| 1250-0082 | Frame assembly with powder coated galvanized rails and 10" step for use with front drive axle. Includes 12 x 3.5 x .375 rails behind cab with 11.125 liner and 10.25 x 3.5 x .375 rails below cab with 9.375 liner. | $21,707 |
| 1250-0083 | Frame liner 9.375 x 3.125 x .375 galvanized and powder coated. | $3,123 |
| 1250-0084 | Frame liner 11.125 x 3.125 x .375 galvanized and powder coated. | $3,475 |
| 1250-0085 | Front chassis frame extensions crossmembers and battery brackets shall be zinc plated (galvanized) IPOS. Includes rear subframe if applicable (urban interface straight frame 4x4 etc). | $2,888 |
| 1350-0001 | Dual fuel fill package. Additional fuel fill provided on officer side of unit. | $521 |
| 1350-0002 | Recessed fuel fill | $135 |
| 1350-0003 | Fuel system 50 gallon. | $1,552 |
| 1350-0004 | Fuel system 50 gallon saddle tanks. | $2,668 |
| 1350-0005 | Fuel system 65 gallons. | $1,639 |
| 1350-0008 | Fuel water separator Fuel-Pro 382 (Cummins FH2309). Filter is top serviceable. | $710 |
| 1350-0009 | Fuel line hose braided. Includes fuel pick-up (if applicable). | $303 |
| 1350-0010 | Fuel pick-up for generator or pump. Includes hoses run to generator compartment. | $141 |
| 1350-0011 | Fuel pump electric w/re-prime. | $431 |
| 1350-0012 | Fuel shut-off valve. Location: [#LOC]. | $110 |
| 1350-0013 | Racor fuel/water separator to be a bottom drop out style. Shall include indicator light and audible alarm. | $750 |
| 1350-0014 | Thermal control in-line fuel heater. | $499 |
| 1350-0025 | Fuel line hose braided. Includes re-usable fittings on both ends of the hose. | $303 |
| 1350-0026 | Fuel Lines Wrapped in Thermal Loom | $894 |
| 1350-0027 | Fitch fuel catalyst drop in style | $820 |
| 1350-0037 | Fuel system w/65 gallon stainless steel tank. | $2,879 |
| 1350-0040 | Fuel system 50 gallon stainless steel saddle tanks. | $5,200 |
| 1350-0041 | Fuel line service loop for tank maintenance. 4' loop coiled above fuel tank(s). | $95 |
| 1350-0043 | Fuel system w/50 gallon stainless steel tank. | $2,646 |
| 1350-0046 | Fuel water separator Fuel-Pro 382 with light and alarm. Filter is top servicable. | $820 |
| 1350-0048 | Fuel system 100 gallons. Tank located above framerails to rear of cab. | $2,349 |
| 1350-0049 | Fuel system 85 gallons. Tank located above framerails to rear of cab. | $2,349 |
| 1350-0050 | Fuel system 60 gallon saddle tanks. | $3,154 |
| 1350-0053 | Racor model 4120R1230 fuel/water separator. | $834 |
| 1350-0054 | Fuel water separator Fuel-Pro 382 with light and alarm. Filter is top servicable. | $820 |
| 1350-0057 | Fuel line hose silicone. | $303 |
| 1350-0058 | Radiator mounted fuel cooler. | $493 |
| 1350-0060 | Fuel system 60 gallon stainless steel saddle tanks. | $5,686 |
| 1350-0064 | The exterior of the chassis fuel tank(s) shall be coated with LINE-X. | $484 |
| 1350-0065 | The exterior of the battery tray(s) shall be coated with LINE-X. Includes covers if equipped. | $484 |
| 1350-0067 | Fuel system w/50 gallon stainless steel tank. Includes taper rear. | $3,041 |
| 1350-0068 | Fuel drain valve in place of plug. | $110 |
| 1400-0002 | Battery four group 31 1000 CCA. | $1,028 |
| 1400-0003 | Battery six group 31 1000 CCA. | $1,537 |
| 1400-0010 | Battery six Delco 1150 Hi-Cycle 700 CCA. | $1,355 |
| 1400-0019 | Special battery jumper stud location. Jumper studs to be located [#LOC]. | $365 |
| 1400-0020 | Relocate custom chassis batteries. Location: [#LOC]. | $1,088 |
| 1400-0024 | Jumper studs to be located below driver's side front corner of body (or pump module if equipped). Studs to face down with positive stud outboard. | $220 |
| 1400-0027 | Additional set of jumper studs. Location: Opposite standard location. | $374 |
| 1400-0028 | Battery six Optima model D31T 900CCA. | $3,582 |
| 1400-0029 | Battery jump start system. Includes Anderson receptacle under officer side running board offset forward and 25' jumper cables with alligator clips and Anderson connector. | $620 |
| 1400-0032 | Battery five group 31 1000 CCA (two left / three right). For use with below cab DEF tank only. | $1,284 |
| 1400-0033 | Heater pads for (4) Group 31 battery system. Wire pads to block heater receptacle. | $1,049 |
| 1400-0034 | Stainless steel battery trays. | $519 |
| 1400-0038 | Battery two 8D 1400 CCA. | $1,257 |
| 1400-0039 | Battery five Optima model D31T 900CCA. | $3,169 |
| 1400-0040 | Battery set additional two group 31 1000 CCA. Location: [#LOC]. | $570 |

| Item No. | Description | |
|---|---|---|
| 1400-0042 | Jumper studs to be located below driver's side front corner of body (or pump module if equipped). Studs to face outboard. | $220 |
| 1400-0043 | Jumper studs to be located below driver's side front corner of body. Studs to face outboard. | $220 |
| 1400-0046 | Heater pads for (5) Group 31 battery system. Wire pads to winterization shoreline receptacle. | $1,208 |
| 1400-0048 | Battery five group 31 1000 CCA (two left / three right). | $1,284 |
| 1400-0050 | (2) additional batteries located in R1 shall be Isolated for use with 24V winch. The (2) batteries are not to be hooked up to the 12 Volt electric bus. | $872 |
| 1400-0051 | (2) additional batteries located under the cab shall be Isolated for use with 24V winch. The (2) batteries are not to be hooked up to the 12 Volt electric bus. | $872 |
| 1400-0054 | Four(4) group 31 AGM 1150 CCA Odyssey PC-2150 batteries. | $2,939 |
| 1400-0055 | Battery four group 31 1000 CCA. One battery left side (with DEF) and three on right side. For use with 44.5" cab only. | $1,028 |
| 1400-0056 | Officer side front battery isolated for use with 12V accessory system. The battery is not to be hooked up to the 12 Volt electric bus. | $535 |
| 1400-0057 | Battery five group 31 760 CCA (two left / three right). For use with below cab DEF tank only. | $1,284 |
| 1400-0059 | Five (5) group 31 AGM 1150 CCA Odyssey PC-2150 batteries. (two left / three right). For use with below cab DEF tank only. | $3,672 |
| 1400-0060 | Battery five Delco 1110 Hi-Cycle 750CCA (two left / three right). For use with below cab DEF tank only. | $1,129 |
| 1510-0000 | Seat cavity cover (EA). | $180 |
| 1510-0035 | Universal air pack bottle bracket (EA). Location: [#LOC]. | $156 |
| 1510-0038 | Driver seat 911 air ride. | $960 |
| 1510-0039 | Driver seat to be 911 air ride with SCBA back | $1,140 |
| 1510-0040 | Officer seat to be 911 air ride | $960 |
| 1510-0041 | Officer seat 911 air ride SCBA. | $1,140 |
| 1510-0042 | Officer seat to be 911 fixed SCBA. | $932 |
| 1510-0043 | Driver seat to be Bostrom air ride. | $1,062 |
| 1510-0044 | Driver seat to be Bostrom air ride with SCBA back | $1,232 |
| 1510-0045 | Officer seat to be Bostrom air ride. | $1,062 |
| 1510-0046 | Officer seat to be Bostrom air ride SCBA. | $1,232 |
| 1510-0047 | Officer seat to be Bostrom fixed SCBA. | $1,032 |
| 1510-0048 | Driver seat to be 911 electric. | $1,431 |
| 1510-0049 | Driver seat to be Bostrom electric. | $1,530 |
| 1510-0050 | Rear facing 911 seat with SCBA driver's side. | $802 |
| 1510-0051 | Engine cover 911 one man bench with SCBA | $1,049 |
| 1510-0052 | Engine cover 911 two man bench with SCBA. | $1,771 |
| 1510-0053 | Rear facing 911 seat with SCBA officer's side. | $802 |
| 1510-0054 | Rear facing Bostrom seat with SCBA driver's side. | $772 |
| 1510-0055 | Engine cover Bostrom one man bench with SCBA | $1,078 |
| 1510-0056 | Engine cover Bostrom two man bench with SCBA. | $1,795 |
| 1510-0057 | Rear facing Bostrom seat with SCBA officer's side. | $772 |
| 1510-0058 | Fold down 911 seat located [#LOC] | $431 |
| 1510-0059 | Fold down 911SCBA seat located [#LOC]. | $950 |
| 1510-0060 | Fold down Bostrom seat located [#LOC]. | $431 |
| 1510-0061 | Fold down Bostrom SCBA seat located [#LOC]. | $894 |
| 1510-0062 | Two man bench centered on rear wall with 911 SCBA backs. Includes angled corners. | $1,366 |
| 1510-0063 | Two man bench centered on rear wall with Bostrom SCBA. Includes angled corners. | $1,684 |
| 1510-0064 | Four man bench centered on rear wall with 911 SCBA | $3,216 |
| 1510-0065 | Four man bench centered on rear wall with Bostrom SCBA. | $2,961 |
| 1510-0066 | One man bench centered on rear wall with 911 SCBA | $1,111 |
| 1510-0067 | One man bench centered on rear wall with Bostrom SCBA | $1,212 |
| 1510-0072 | Tiller cab seating 911 air ride and flip down training seat. | $1,025 |
| 1510-0076 | Bostrom SCBA seats forward facing center of rear wall (PR). Free standing with individual risers on rear wall. | $2,056 |
| 1510-0077 | Tiller cab seating Bostrom air ride and flip down training seat. | $1,062 |
| 1510-0080 | Officer seat to be 911 attendant. | $675 |
| 1510-0081 | Cab occupant detection seating system. Wired to visual indicator (hazard light). Includes audible alarm. Requires multiplex electrical system. | $4,713 |
| 1510-0082 | Zico Quic-Hold mechanical air pack bottle bracket for 5'' bottle (ea). Model MWAB with adjustable footplate and pull release strap. Location: [#LOC]. | $565 |
| 1510-0083 | 911 Attendant seat with individual riser (PR). Locate centered on rear wall. | $2,297 |

| Item No. | Description | |
|---|---|---|
| 1510-0084 | Officer seat to be Bostrom electric | $1,530 |
| 1510-0085 | Custom logo embroidery (EA). Bostrom seats only. Requires set-up sales code. | $137 |
| 1510-0086 | Embroidery set-up for Bostrom cab seats. | $698 |
| 1510-0088 | 911 SCBA seats forward facing center of rear wall (PR). Free standing mtd on a common seat riser. | $2,148 |
| 1510-0089 | Tailbone pad for jump seat(s). (Reference print #634894) | $51 |
| 1510-0090 | One man bench (PR) on rear cab wall with Bostrom SCBA back. Location: driver and officer side outboard. | $1,687 |
| 1510-0091 | Zico Quic-Hold mechanical air pack bottle bracket (EA). Model QLM-U with adjustable footplate and pull release. Location: [#LOC]. | $684 |
| 1510-0092 | Two man bench centered on rear wall with bench seat style back cushion and angled riser corners. | $1,317 |
| 1510-0093 | Custom logo embroidery (EA). Seats Inc. seats only. Requires set-up sales code. | $152 |
| 1510-0094 | Embroidery set-up for Seats Inc. 911 cab seats. | $925 |
| 1510-0095 | Driver seat Bostrom electric with integral seat belt. | $1,703 |
| 1510-0096 | Officer seat Bostrom electric with SCBA back with integral seat belt. | $2,028 |
| 1510-0097 | Rear facing seat driver side Bostrom with SCBA back and integral seat belt. | $864 |
| 1510-0098 | Rear facing seat officer side Bostrom with SCBA back and integral seat belt. | $864 |
| 1510-0099 | Rear wall seat Bostrom flip-up with SCBA back and integral seat belt. Location: [#LOC]. | $1,198 |
| 1510-0100 | Padded headrest for fold down jump seat (EA). Not available with rear wall windows. | $126 |
| 1510-0101 | Driver and officer outboard rear facing seats mounted at 30 degree angle. Includes upper seat belt brkt. adjusted to rear of cab. | $498 |
| 1510-0104 | 911 SCBA seat forward facing center of rear wall. Free standing mtd on seat riser. | $1,076 |
| 1510-0105 | One man bench (PR) on rear cab wall with Seats 911 SCBA back. Location: driver and officer side outboard. | $1,369 |
| 1510-0106 | 911 SCBA seats forward facing rear wall (PR). Equally spaced with individual risers on rear wall. | $2,148 |
| 1510-0116 | Fold-down seat located [#LOC]. | $428 |
| 1510-0117 | Bostrom SecureAll mechanical air pack bottle bracket (EA). Location: [#LOC]. | $544 |
| 1510-0118 | Flip-up 911 SCBA seat located [#LOC]. | $977 |
| 1510-0119 | Flip up Bostrom SCBA seat located [#LOC]. | $1,009 |
| 1510-0120 | Flip up 911 attendant seat located [#LOC]. | $1,068 |
| 1510-0121 | Flip up Bostrom attendant seat located [#LOC]. | $1,188 |
| 1510-0122 | Fold down seat with 911 SCBA back located [#LOC]. | $953 |
| 1510-0123 | Fold down seat with Bostrom SCBA back located [#LOC]. | $968 |
| 1510-0124 | Officer seat fixed Bostrom with SCBA back and integral seat belt. | $1,001 |
| 1510-0126 | CrewGuard occupant seating detection system. Display location: [#LOC]. | $3,525 |
| 1510-0127 | Additional CrewGuard display. Location: [#LOC]. | $281 |
| 1510-0128 | FlameFighter air pack bottle bracket (EA). Model 17000 with adjustable footplate and push-button release. Location: [#LOC] | $548 |
| 1510-0129 | Two man bench centered on rear wall with Bostrom SCBA backs for use with ALS provision with side access only. Includes (1) horizontally hinged door on the front of the rear bench seat for access to storage below bench. | $2,128 |
| 1510-0131 | Bostrom SecureAll mechanical air pack bottle bracket (EA) for bench / fold-down seat. Location: [#LOC]. | $667 |
| 1510-0133 | Adjust rear facing outboard seats as far inboard as appicable next to engine cover. | $121 |
| 1510-0134 | Rear wall seat Bostrom air ride Sierra non SCBA. Includes single riser. N/A with outboard rear wall seats. Storage below seat N/A. Location: [#LOC]. | $1,407 |
| 1510-0135 | Arm rest installed on both sides of the seat. Location: [#LOC]. | $514 |
| 1510-0136 | Center rear wall seats to be mounted approximately 5" apart. C2X/T2X only. | $244 |
| 1510-0137 | Bostrom SCBA seat forward facing center of rear wall. Free standing mtd on seat riser. | $1,086 |
| 1510-0138 | Two man bench centered on rear wall with (1) 911 SCBA back driver and (1) bench back cushion officer. | $1,200 |
| 1510-0144 | FlameFighter model 14000 air pack bottle bracket with model 39015 safety strap (EA). Location: [#LOC] | $235 |
| 1510-0146 | 911 AIR SCBA seats forward facing center of rear wall (PR). Free standing with individual risers on rear wall. | $3,084 |
| 1510-0147 | 911 SCBA seats forward facing rear wall (3). Equally spaced with common riser on rear wall. Extended cab with medium doors only. | $3,220 |
| 1510-0148 | Rear facing 911 attendant seat driver's side. | $675 |
| 1510-0149 | Rear facing 911 attendant seat officer's side. | $675 |

| Item No. | Description | |
|---|---|---|
| 1510-0150 | Two man bench centered on rear wall with (1) Bostrom SCBA back officer and (1) bench back cushion driver. | $1,518 |
| 1510-0153 | Bostrom SCBA seats forward facing center of rear wall (PR). Free standing mounted on a common seat riser. | $2,056 |
| 1510-0154 | Three man bench offset to driver on rear wall with Bostrom SCBA backs for use with ALS provision with officer side access only. Includes provision for rear heaters mounted below bench. | $2,670 |
| 1510-0186 | Driver and officer outboard rear facing seats mounted at 10 degree inboard angle. | $498 |
| 1510-0190 | 911 SCBA seats forward facing rear wall (3). Equally spaced with common riser on rear wall. Center seat lowered 4". For use with extended LTH aerial cab with medium doors only. | $3,220 |
| 1510-0200 | Department patch sewn on Bostrom seat (EA). Requires customer supplied department patch for each seat. | $109 |
| 1510-0203 | Bracket SCBA IMMI SmartDock Gen2 restraint system. Location: [#LOC]. | $506 |
| 1510-0204 | Officer seat to be 911 electric SCBA | $2,014 |
| 1510-0206 | Zico electric hands-free air pack bottle bracket (EA). Model QM-ELB with adjustable footplate. Bracket release will be activated with park brake. Location: [#LOC]. | $734 |
| 1510-0209 | Driver seat to be 911 attendant. Includes forward and aft adjustment. | $675 |
| 1510-0210 | Two man bench centered on rear wall with bench style back cushion for use with ALS provision with side access only. | $1,762 |
| 1510-0211 | Driver seat to be Bostrom air ride with integral seat belt. | $1,891 |
| 1510-0212 | Officer seat to be Bostrom SCBA air ride with integral seat belt. | $2,626 |
| 1510-0214 | Rear wall seat riser to be raised 4" in height. Includes 2" bench seat cushion thickness reduction for non-vista roofs. | $151 |
| 1510-0217 | Arm rest rear wall (PR). Located outboard of bench seat on seat support channel. | $433 |
| 1510-0226 | Officer seat to be Bostrom fixed attendant. | $653 |
| 1510-0228 | Three man bench center on rear wall with 911 SCBA backs. Includes provision for rear heaters mounted below bench (if equipped). | $2,954 |
| 1510-0229 | (2) Flip up Bostrom attendant seats with common riser located center on rear wall. | $2,372 |
| 1510-0235 | Two man bench centered on rear wall with Seats 911 SCBA backs for use with ALS provision. Includes recess for SCBA brackets in wall. | $3,134 |
| 1510-0238 | Bostrom SCBA seats with integral seat belt forward facing center of rear wall (PR). Free standing mounted on a common seat riser. | $2,241 |
| 1510-0240 | Driver officer and rear bench seat riser constructed of diamond plated IPOS (as equipped). Includes diamond plate overlay for rear facing seats. | $337 |
| 1510-0243 | Two (2) Bostrom SCBA seat backs and a three (3) person bench (no center position). | $2,177 |
| 1510-0244 | Driver seat Bostrom electric with SCBA back with integral seat belt. | $2,028 |
| 1510-0248 | Seats Inc 911 SCBA seat forward facing rear wall center. For use with extended cab with side access ALS compartments. Includes pass-thru and rear heater provision (if equipped). | $1,100 |
| 1510-0249 | Two man bench centered on rear wall with Bostrom SCBA backs for use with ALS provision with side access only or interior side compartments. Includes provision for rear heaters mounted below bench. | $2,128 |
| 1510-0252 | Location modification of electric seat controls. The controls shall be relocated to the outboard side of the seat as mounted IPO standard location. | $217 |
| 1510-0253 | Bostrom SecureAll mechanical air pack bottle bracket (EA). SecureAll factory adjusted to accommodate carbon fiber bottle(s) in mounted location(s) as specified. Location: [#LOC]. | $544 |
| 1510-0254 | Bostrom SecureAll mechanical air pack bottle bracket (EA) for bench / fold-down seat. SecureAll factory adjusted to accommodate carbon fiber bottle(s) in mounted location(s) as specified. Location: [#LOC]. | $667 |
| 1510-0256 | Two man bench centered on rear wall Non-SCBA seat backs. (1) Access door on each side/end of riser to store (1) SCBA bottle on each side of riser. | $1,656 |
| 1510-0257 | Rear facing and forward facng rear cab risers to be extended 2" in height. Vista cabs only. | $479 |
| 1510-0258 | Zico EZ-LOC mechanical air pack bottle bracket (EA). Model QM-EZL with adjustable top clamp and footplate with center pull release for Bostrom seat. Location: [#LOC]. | $602 |
| 1510-0259 | Driver and officer outboard rear facing seats mounted at 15 degree inboard angle. | $498 |
| 1510-0261 | 911 Attendant seat (PR) on common riser. Locate centered on rear wall. | $2,297 |
| 1510-0263 | Two man bench centered on rear wall with 911 SCBA backs. Includes square corners. | $1,366 |
| 1510-0264 | Two man bench centered on rear wall with Bostrom SCBA. Includes square corners. | $1,684 |
| 1510-0265 | Department patch sewn on 911 seat (EA). Requires customer supplied department patch for each seat. | $109 |
| 1510-0267 | Two man bench centered on rear wall with Bostrom SCBA backs includes squared corners and separate seat bottoms spaced 6" from each other. | $1,803 |

| Item No. | Description | |
|---|---|---|
| 1510-0268 | Rear facing seat center rear engine cover Bostrom flip-up with SCBA back and integral seat belt. | $1,198 |
| 1510-0270 | Seatbelt P-clips. Provide on all connector ends of seatbelts. | $194 |
| 1510-0272 | Driver seat to be Bostrom fixed SCBA. Includes fore and aft adjustment. | $1,124 |
| 1510-0273 | Four man bench centered on rear wall with (2) Bostrom SCBA inboard and attendant backs outboard. | $2,749 |
| 1510-0274 | Two man bench centered on rear wall with 911 SCBA backs for use with exterior side access only or interior side compartments. Includes provision for rear heaters mounted below bench. | $2,412 |
| 1510-0275 | Arm rest installed on the outboard side of the seat. Location: [#LOC]. | $259 |
| 1510-0276 | Face mask storage pouch for Bostom Tanker series SCBA seats (EA). | $92 |
| 1510-0277 | Driver outboard rear facing seat mounted at 10 degree inboard angle. | $250 |
| 1510-0278 | Two man bench centered on rear wall with bench style back cushion with 2" extra depth removable bottom cushion with cut-out under cushion and angle corners for use with ALS provision with side access only. | $2,631 |
| 1510-0279 | ReadyReach seat belt extender. Location: [#LOC]. | $85 |
| 1510-0281 | Driver seat 911Battalion air ride ABTS. | $2,262 |
| 1510-0282 | Officer seat 911 Battalion ABTS air ride SCBA. N/A with Roll-Tek or 4Front due to reduction in legroom caused by pre-tensioner. | $2,019 |
| 1510-0283 | Officer seat to be 911 Battalion ABTS fixed SCBA. | $1,052 |
| 1510-0284 | Rear facing 911 Battalion ABTS seat with SCBA driver's side. | $1,052 |
| 1510-0285 | Rear facing 911 Battalion ABTS seat with SCBA officer's side. | $1,052 |
| 1510-0286 | Two man bench centered on rear wall with 911 Battalion ABTS SCBA backs. Includes angled corners. | $2,124 |
| 1510-0287 | Two man bench centered on rear wall with 911 Battalion ABTS SCBA backs. Includes square corners. | $2,124 |
| 1510-0289 | Fold down seat with 911 Battalion ABTS SCBA back located [#LOC]. | $1,106 |
| 1510-0290 | Rear facing 911 Battalion ABTS seat with SCBA on engine cover. | $1,052 |
| 1510-0316 | Two man SCBA bench seat riser only with angled corners. No SCBA backs or bottom cushion. For lower storage only. | $1,175 |
| 1510-0317 | Zico EZ-LOC mechanical air pack bottle bracket (EA). Model QM-EZL-CPR with adjustable top clamp and adjustable footplate with center pull release for 911 seats. Location: [#LOC]. | $680 |
| 1510-0318 | Rear facing Bostrom seat fixed attendant officer's side. | $653 |
| 1510-0319 | (2) Flip up Bostrom SCBA seats with common riser located center on rear wall. | $2,487 |
| 1510-0320 | Rear facing USSC Valor ABTS seat with SCBA driver's side. Includes fore and aft slides. | $1,353 |
| 1510-0321 | Rear facing USSC Valor ABTS seat with SCBA officer's side. Includes fore and aft slides. | $1,391 |
| 1510-0322 | Flip-up USSC Valor ABTS seat with 90 deg SCBA back (PR) forward facing center of rear wall mounted on a common seat riser. Long cab with medium doors only. | $3,121 |
| 1510-0323 | Adjustable forward/aft seat track on officer seat. | $94 |
| 1510-0324 | Officer seat USSC Valor air ride ABTS SCBA. Includes fore and aft slides. | $2,257 |
| 1510-0325 | Flip-up USSC Valor ABTS seats forward facing center of rear wall mounted on a common seat riser. Includes (1) SCBA (driver side) and (1) non-SCBA (officer side) forward facing center of rear wall mounted on a common seat riser. | $3,374 |
| 1510-0326 | Zico EZ-LOC mechanical air pack bottle bracket (EA). Model QM-EZL with adjustable top clamp and adjustable footplate with center pull release for Valor seats. Location: [#LOC]. | $662 |
| 1510-0327 | Custom logo embroidery (EA). Valor seats only. | $95 |
| 1510-0328 | Driver seat USSC Valor air ride. | $1,781 |
| 1510-0329 | Officer seat USSC Valor fixed SCBA. | $958 |
| 1510-0330 | Rear facing USSC Valor SCBA seat driver's side. | $1,037 |
| 1510-0331 | Rear facing USSC Valor SCBA seat officer's side. | $1,037 |
| 1510-0332 | Two man bench centered on rear wall with Valor SCBA backs. Includes angled corners. | $2,113 |
| 1510-0333 | Two man bench centered on rear wall with Valor SCBA backs. Includes square corners. | $2,252 |
| 1510-0335 | Fold down seat with Bostrom SCBA back and Bostrom bottom cushion. Not available at outboard position w/manual windows. Located [#LOC]. | $994 |
| 1510-0338 | Rear facing cab risers to be extended 3" in height. Vista cabs only. | $201 |
| 1510-0339 | Bostrom attendant seats with integral seat belt forward facing center of rear wall (PR). Free standing mounted on a common riser. | $2,241 |
| 1510-0343 | Flip-up USSC Valor ABTS seat with 90 deg SCBA back (3) forward facing equally spaced on rear wall mounted on a common seat riser. Long cab with medium doors only. | $4,511 |
| 1510-0345 | Officer seat USSC Valor air ride SCBA. | $1,852 |
| 1510-0346 | Zico model ULLH-EZO air pack bottle bracket (EA). Location: [#LOC]. | $310 |

| Item No. | Description | |
|---|---|---|
| 1510-0347 | Rear walll 4 man seat riser. Includes 2 man bench centered on rear wall with Bostrom SCBA and outboard flip up Bostrom SCBA seat each side of bench. 80" C/A cabs only. | $3,701 |
| 1510-0349 | Fold-down rear wall seat with 12.25" long Bostrom bottom cushion. Includes E-ONE non-SCBA backrest. Seat located [#LOC]. | $876 |
| 1510-0350 | One man bench inboard driver side on rear wall with 911 SCBA. | $1,111 |
| 1510-0351 | (3) Flip up Bostrom SCBA seats with integral seat belt and common riser located evenly spaced on rear wall. | $3,732 |
| 1510-0352 | (2) individual Bostrom ABTS SCBA seats outboard on a common 60" wide riser. Includes provision for rear heaters mounted below bench (if equipped). | $2,481 |
| 1510-0353 | Driver seat Bostrom electric with integral dual retractor seat belt. | $2,037 |
| 1510-0354 | Officer seat fixed Bostrom 550 with SCBA back and integral dual retractor seat belt. | $1,198 |
| 1510-0355 | Rear facing seat officer side Bostrom 550 with SCBA back and integral dual retractor seat belt. | $1,198 |
| 1510-0356 | Bostrom 550 SCBA seats with integral dual retractor seat belt forward facing center of rear wall (PR). Free standing mounted on a common seat riser. | $2,910 |
| 1510-0357 | Driver seat to be 911 Battalion electric ABTS. | $2,679 |
| 1510-0358 | Flip-up 911 Battalion ABTS SCBA seat located rear engine cover (PR). | $2,740 |
| 1510-0359 | Two man bench centered on rear wall with (1) 911 SCBA back center on rear wall. | $1,200 |
| 1510-0360 | Rear facing Bostrom seat fixed attendant driver's side. | $653 |
| 1510-0362 | Rear facing seat officer side Bostrom attendant with integral seat belt. | $944 |
| 1510-0363 | Two (2) Bostrom SCBA seat backs on a three (3) person bench riser (no center position) with individual bottom cusions. | $2,177 |
| 1510-0364 | Officer seat fixed Bostrom attendent with integral seat belt. | $944 |
| 1510-0365 | Officer seat USSC Valor air ride. | $1,781 |
| 1510-0366 | Fold-down rear wall seat with Valor bottom cushion. Includes E-ONE non-SCBA backrest. Seat located [#LOC]. | $901 |
| 1510-0368 | Officer seat USSC Valor non-SCBA fixed with recline back. | $1,455 |
| 1510-0370 | Fold-down rear wall jump seat to be mounted 2.75" lower than std to provide additional headroom (EA). Non-SCBA seats only. (Not available with heaters mounted outboard on rear wall) | $189 |
| 1510-0372 | Fold-down rear wall seat with Valor bottom cushion. Includes E-ONE lumbar backrest. Seat located [#LOC]. | $901 |
| 1510-0373 | Officer seat USSC Valor ABTS fixed attendant. | $1,561 |
| 1510-0374 | Officer seat to be Bostrom electric SCBA. | $2,010 |
| 1510-0377 | Two man bench riser centered on rear wall with (1) Bostrom SCBA back officer with single bottom cushion. Driver side open for dealer/customer installed equiipment. | $1,326 |
| 1510-0379 | Officer seat Bostrom 550 electric with SCBA back with integral dual retractor seat belt. | $2,363 |
| 1510-0380 | Officer seat USSC Valor fixed SCBA with adjustable fore/aft track. | $1,177 |
| 1510-0381 | Rear facing USSC Valor SCBA seat driver's side with adjustable fore/aft track. | $1,256 |
| 1510-0382 | Rear facing USSC Valor SCBA seat officer's side with adjustable fore/aft track. | $1,256 |
| 1515-0000 | Air conditioning aerial ISM/S60. Two roof top condensers for use with aerials | $7,304 |
| 1515-0001 | Air Conditioning premium aerial ISM/S60. Two roof top condensers for use with aerials | $9,624 |
| 1515-0006 | Air Conditioning filter kit | $269 |
| 1515-0007 | Air conditioning for Typhoon only | $6,980 |
| 1515-0012 | Paint air conditioning condenser job color. | $815 |
| 1515-0017 | Air conditioning for the Typhoon X CII X and Quest with Cummins ISC/ISL engine and radiator mounted condenser. | $6,778 |
| 1515-0018 | Air conditioning for the Typhoon X CII X and Quest with roof top mounted condenser. | $7,916 |
| 1515-0020 | Well nut fasteners to attach A/C filter to overhead panel | $248 |
| 1515-0028 | Danhard cooling system for cab medical cabinet. 115v / 12v 13500 BTU wired to battery charger recept. Includes auto transfer switch. Evaporator to be cabinet mtd and condensor to be roof mtd. Note: System draws up to 12 amps AC. | $6,064 |
| 1515-0029 | Air conditioning for the TyphoonX CII X and Quest with Cummins ISC or ISL roof top mounted condensor. | $7,916 |
| 1515-0030 | The cab A/C compressor drive to be a "V" belt with a 1.5:1 ratio. | $2,628 |
| 1515-0036 | Danhard cooling system. 115v / 12v 13500 BTU wired to battery charger recept. Includes evaporator enclosure on ceiling centered rear of cab AC. Compressor located on rear engine cover with expanded metal cover painted to match cab interior. Condensor to be officer side roof mounted above canopy area. Note: System draws up to 12 amps AC. | $6,064 |
| 1515-0038 | Air hose routed from the compressor to the dryer shall be upgraded to include stainless steel mesh for the full length of hose. | $82 |

| Item No. | Description | |
|---|---|---|
| 1515-0040 | Heating and air conditioning cab controls shall be located in the lower center dash panel between driver and officer. | $499 |
| 1515-0046 | Locate roof mounted AC condenser on [#LOC]. | $571 |
| 1515-0066 | Roof mtd A/C system Dometic BliZZard Self-Contained HVAC Series SC14K 14000 BTU with heat strips. Wire to APU/Generator. Locate condenser unit on officer side of cab roof. Location of interior evaporator: [#LOC]. | $4,713 |
| 1515-0067 | Locate rear cab heaters outboard each side above seat support channel. | $381 |
| 1515-0068 | Roof mtd A/C system Dometic BliZZard Self-Contained HVAC Series SC14K 14000 BTU. Wire to shorepower and generator (if equipped with transfer switch). Locate condenser unit on officer side of cab roof. Location [#LOC]. | $4,713 |
| 1515-0069 | Heaters cab rear (PR) and front heater with heat to the feet for the driver and officer. Driver side rear wall w/cover only. | $1,609 |
| 1515-0076 | Heater rear cab w/o cover (EA) and front cab heater with heat to the feet for the driver and officer. Rear heater located under driver side of bench seat. | $1,184 |
| 1520-0000 | Cyclone II medium cab 58" CA | $56,964 |
| 1520-0001 | Cyclone II long cab 67.5" CA | $62,931 |
| 1520-0003 | Typhoon long cab 67.5" CA | $38,279 |
| 1520-0004 | Typhoon Medium cab 58" CA | $35,684 |
| 1520-0005 | Cyclone II medium cab three door with rear door on officer's side. | $56,964 |
| 1520-0006 | Cyclone II long cab three door with rear door on officer's side. | $62,931 |
| 1520-0007 | Tillerman cab. Heat & A/C and (3) 6" (12VDC) fans ceiling mounted (1) each rear corner & (1) front left corner. Seat material and color is the same as in the front cab. | $46,212 |
| 1520-0008 | Cyclone II X medium cab with 58" CA | $54,923 |
| 1520-0009 | Cyclone II X short cab with 44.5" CA | $58,825 |
| 1520-0010 | Cyclone II X long cab with 67.5" CA | $60,891 |
| 1520-0011 | Cyclone II X extended cab with 80" CA | $61,540 |
| 1520-0012 | Typhoon X long cab with 67.5" CA | $36,236 |
| 1520-0013 | Typhoon X medium cab with 58" CA | $33,643 |
| 1520-0015 | Cyclone II X medium cab with ALS provision and 80" CA. Includes exterior hinged ALS doors approx 73" high. | $63,038 |
| 1520-0019 | Cyclone II X medium cab with ALS provision barrier style doors and 80" CA. Includes exterior hinged ALS doors approx 73" high. | $63,831 |
| 1520-0021 | Typhoon X long cab with 67.5" CA. Includes barrier style doors. | $37,033 |
| 1520-0022 | Cyclone II X medium cab with 58'' CA. Includes barrier style doors. | $55,716 |
| 1520-0023 | Cyclone II X long cab with 67.5" CA. Includes barrier style doors. | $61,687 |
| 1520-0024 | Cyclone II X extended cab with 80" CA. Includes barrier style doors. | $62,333 |
| 1520-0025 | Typhoon X medium cab with 58" CA. Includes barrier style doors. | $34,450 |
| 1520-0028 | Cyclone II X long cab with 67.5" CA. For use with a lowered aerial. Requires full length 4.5" deep trough option. | $68,894 |
| 1520-0029 | Typhoon X short cab with 44.5" CA | $37,547 |
| 1520-0038 | Cyclone II X extended cab with 80" CA. For use with a lowered aerial. Requires full length 4.5" deep trough option. | $65,953 |
| 1520-0071 | Cyclone II X medium cab with 58" CA. For use with a lowered aerial. Requires full length 4.5" deep trough option. | $59,336 |
| 1520-0081 | Cyclone II X short cab with 44.5" CA and right hand drive. | $73,741 |
| 1520-0087 | Cyclone II X short cab 2 door with 44.5" ca. Includes transverse compartment at rear of cab above the front axle accessible from both sides. The compartment is approx 48.5" wide x 44.25" high x the width of the cab. | $58,825 |
| 1520-0090 | Cyclone II X (3) door extended cab with 80" CA. Officer side rear door. | $61,540 |
| 1520-0092 | Cyclone II X medium cab with 58'' CA. Includes barrier style doors. For use with a lowered aerial. Requires full length 4.5" deep trough option. | $60,130 |
| 1520-0095 | Cyclone II X long cab with 67.5" CA and barrier style doors. For use with a lowered aerial. Requires full length 4.5" deep trough option. | $69,691 |
| 1520-0096 | Typhoon X extended cab with 80" CA | $40,260 |
| 1520-0097 | Typhoon X extended cab with 80" CA. Includes barrier style doors. | $41,057 |
| 1520-0104 | Cyclone II X (3) door extended cab with 80" CA. Includes barrier style doors. Locate rear door on Officer side of cab. | $63,578 |
| 1520-0106 | Quest medium cab with 58" CA. (QST2) | $67,262 |
| 1520-0110 | Quest long cab with 68" CA and barrier style doors. (QST2) | $74,027 |
| 1520-0111 | Quest extended cab with 80" CA and barrier style doors. (QST2) | $74,673 |

| Item No. | Description | |
|---|---|---|
| 1520-0114 | Typhoon X medium cab with ALS provision barrier style doors and 80" CA. Includes exterior hinged ALS doors approx 73" high. | $42,555 |
| 1520-0116 | Quest medium cab with ALS provision barrier style doors and 80" CA (QST2). Includes exterior hinged ALS doors approx 73" high. | $76,172 |
| 1520-0122 | Typhoon X medium cab with ALS provision and 80" CA. Includes exterior hinged ALS doors approx 73" high. | $41,762 |
| 1520-0131 | Typhoon X short cab with 44.5" CA with barrier style doors. | $38,340 |
| 1520-0142 | Cyclone II X short cab 2 door with 44.5" ca with barrier style doors. Includes transverse compartment at rear of cab above the front axle accessible from both sides. The compartment is approx 35.5" wide x 36" high x the width of the cab. | $59,161 |
| 1535-0002 | Driver side cab wheel well medical cabinet approximately 42 x 22 (25 Quest) x 28. Includes external locking roll-up door and interior hinged door with locking push-button latch. Cabinet includes (2) adjustable shelves. | $2,092 |
| 1535-0003 | Officer side cab wheel well medical cabinet approximately 42 x 22 (25 Quest) x 28. Includes external locking roll-up door and interior hinged door with locking push-button latch. Cabinet includes (2) adjustable shelves. | $2,092 |
| 1535-0004 | Medical cabinet mounted on rear wall of cab 48 x 32 x 24 with a locking roll up door. Lower door opening raised to provide hand clearance. | $4,335 |
| 1535-0005 | Medical cabinet mounted on rear wall of cab 48 x 40 x 20 with locking roll up door. Lower door opening raised to provide hand clearance. | $4,076 |
| 1535-0006 | Medical cabinet mounted on rear wall of cab 55X32X19 with a locking roll up door. Lower door opening raised to provide hand clearance. | $2,780 |
| 1535-0007 | Medical cabinet mounted on rear wall of cab 55 x 40 x 20 with a locking roll up door. Lower door opening raised to provide hand clearance. | $3,467 |
| 1535-0012 | Medical cabinet mounted on the wheel well driver side of cab 45H x 21W x 24D with a locking roll-up door. | $2,602 |
| 1535-0013 | Medical cabinet mounted on the wheel well officer side of cab 45H x 21W x 24D with a locking roll-up door. | $2,602 |
| 1535-0028 | Cab medical storage cabinet(s) finish to be swirled with clear coating. | $1,239 |
| 1535-0030 | All roll-up medical cabinet doors selected on the cab to be ROM brand. | $137 |
| 1535-0032 | All medical cabinet RUD in the cab to be locking with 1250 key | $142 |
| 1535-0034 | All exterior access RUD for medical cabinets to be painted job color. Not available on two tone cabs. | $260 |
| 1535-0035 | Engine compartment light LED (EA). | $245 |
| 1535-0037 | Rear cab wall medical cabinet with side access doors (one each side). Cabinet to be 50" high x 38" wide x 24" deep. Includes (2) locking roll-up doors (satin finish) and (3) adjustable shelves. Lower door openings raised to provide hand clearance. | $3,157 |
| 1535-0038 | Interior medical cabinet. Locate to rear of engine cover. Cabinet to be 30" high x 38" wide x 20" deep with a locking roll up door. Includes (1) adjustable shelf. | $3,236 |
| 1535-0043 | Medical cabinet mounted on rear wall of cab 48X32X24 with a locking roll up door and windows in door slats. Lower door opening raised to provide hand clearance. | $4,642 |
| 1535-0045 | ALS interior - Style ''A''. Includes forward wall with center locking roll-up door for access from int small compts up high ea side of ctr opening with glove box latch on driver's side compt and Medco keyed lock on officer's side strikers high and low on ALS doors access plts on int panel of ALS doors approx 5"W x 17"H x 70"L backboard sleeve two adj shelves ahead of backboard sleeve and a roll-out tray with 36" slides each side on floor. | $9,045 |
| 1535-0046 | Medical cabinet mounted on rear wall of cab 60X40X23 with a locking roll up door. Lower door opening raised 12" to provide area for rear heaters. Includes lower ventilation front access and removable sub-floor for additional access. | $3,289 |
| 1535-0047 | Medical cabinet mounted on the officer side rear cab wall 55(54 as required)X18X12 with a locking roll up door. Lower door opening raised to provide hand clearance. | $2,622 |
| 1535-0048 | Medical cabinet mounted on the driver side rear cab wall 55(54 as required)X18X12 with a locking roll up door. Lower door opening raised to provide hand clearance. | $2,622 |
| 1535-0049 | Louvers for interior medical/ ALS cabinet wall(s) to help cabinet contents to maintain cab interior temperatures. The louvers to be in four sets of three located two high and two low. Location: [#LOC]. | $182 |
| 1535-0052 | Medical cabinet mounted on rear wall of cab 52" x 40" x 23" with a locking roll up door. Lower door opening raised 4" to provide area for radio installation. Includes lower ventilation and removable sub-floor for additional access. | $3,289 |
| 1535-0054 | Exterior access roll up doors for medical cabinets to be painted upper cab color. | $260 |

| Item No. | Description | |
|---|---|---|
| 1535-0057 | Driver side cab wheel well medical cabinet approximately 42 x 22 (25 Quest) x 28. Includes external locking pan door painted job color and interior hinged full height door with locking push-button latch. Cabinet includes (2) adjustable shelves. | $2,509 |
| 1535-0058 | Medical cabinet mounted on rear wall of cab 48X42X20 with angled corners and locking roll up door. Lower door opening raised to provide hand clearance. | $4,076 |
| 1535-0059 | Brace .75 x 2.75 below medical cabinet shelf | $90 |
| 1535-0060 | Rear cab wall medical cabinet with side access doors (one each side). Cabinet to be 62" high x 38" wide x 24" deep. Includes (2) locking roll-up doors (satin finish) and (3) adjustable shelves. Lower door openings raised to provide hand clearance. | $3,402 |
| 1535-0061 | Driver side cab wheel well medical cabinet approximately 42x22(25 Quest)x28. Includes external locking pan door painted job color and interior locking roll-up door with satin finish. Cabinet includes (2) adjustable shelves. | $2,753 |
| 1535-0062 | Interior medical cabinet. Locate to rear of engine cover. Cabinet to be 30" high x 38" wide x 20" deep with a locking roll up door. Includes (1) adjustable shelf and forward facing drop down door. | $3,330 |
| 1535-0063 | Officer side cab wheel well medical cabinet approximately 42x22(25 Quest)x28. Includes external locking single door painted job color and interior hinged door with locking push-button latch. Cabinet includes (2) adjustable shelves. | $2,509 |
| 1535-0064 | Rear cab wall medical cabinet with side access doors (one each side). Cabinet to be 48" high x 38" wide x 24" deep. Includes (2) locking roll-up doors (satin finish) and (3) adjustable shelves. Lower door openings raised to provide hand clearance. | $3,157 |
| 1535-0066 | Interior medical cabinet. Locate to lower rear of engine cover. Cabinet to be 32" high x 30" wide x 24" deep with single pan double bi-fold doors. Includes (1) vertical and (1) horizontal partition centered in the cabinet louvered lower side walls and removable lower rear facing panel for installation of heaters. | $3,269 |
| 1535-0067 | ALS - Side access. Includes compts on each side of cab access up high each side of interior outboard with glove box latches strikers high and low on ALS doors (CIIX/TyphoonX only) access plts on int panel of ALS doors (CIIX/TyphoonX only) extended cab floor and three adj shelves. | $3,609 |
| 1535-0069 | Rear cab wall medical cabinet with side access doors (one each side). Cabinet to be 50" high x 30" wide x 24" deep. Includes (2) locking roll-up doors (satin finish) and (3) adjustable shelves. Lower door openings raised to provide hand clearance. | $3,157 |
| 1535-0070 | Riser for medical cabinet. Lifts bottom of cabinet up to top of rear wall seat support. Front of riser to be closed sides to be open. CII X / Typhoon X only. | $727 |
| 1535-0072 | Rear cab wall medical cabinet with side diamond plate access doors (one each side) mounted above support channel on back wall. Cabinet to be 38" high x 47.25" wide x 14" deep. Includes diamond plate doors hinged to the rear with d-ring latches and (2) adjustable shelves. | $3,157 |
| 1535-0073 | Officer side cab wheel well medical cabinet approximately 42 x 22 (25 Quest) x 28. Includes external locking pan door painted job color and interior hinged full height door with locking push-button latch. Cabinet includes (2) adjustable shelves. | $2,509 |
| 1535-0074 | All medical cabinet RUD in the cab to be locking with CH751 key. | $142 |
| 1535-0075 | Driver side cab wheel well medical cabinet approximately 42x22(25 Quest)x28. Includes external locking roll-up door and interior hinged door with locking push-button latch. Cabinet includes (1) adjustable partition installed and (2) adjustable shelves shipped loose in the cabinet. | $2,208 |
| 1535-0076 | Driver side cab wheel well medical cabinet approximately 42x22(25 Quest)x28. Includes external pan door with locking Tri-Mark latch painted job color and interior full height hinged door with locking push-button latch. Cabinet includes (2) adjustable shelves. | $2,669 |
| 1535-0077 | Officer side cab wheel well medical cabinet approximately 42x22(25 Quest)x28. Includes external pan door with locking Tri-Mark latch painted job color and interior full height hinged door with locking push-button latch. Cabinet includes (2) adjustable shelves. | $2,669 |
| 1535-0078 | Interior medical cabinet. Locate to rear of engine cover. Cabinet to be 25.5" high x 30" wide x 23" deep with (2) drop down doors. | $1,079 |
| 1535-0079 | All roll-up medical cabinet doors selected on the cab to be Amdor brand. | $137 |
| 1535-0080 | Officer side cab wheel well medical cabinet approximately 42x22(25 Quest)x28. Includes external locking roll-up door. Cabinet includes (2) adjustable shelves. | $1,871 |
| 1535-0081 | Driver side cab wheel well medical cabinet approximately 42x22(25 Quest)x28. Includes external locking roll-up door. Cabinet includes (2) adjustable shelves. | $1,871 |
| 1535-0082 | 11"H x 18"W access opening with cargo net cover on driver and officer side wheel well medical cabinets back wall(engine cover side)up high. Includes deflector plate on ceiling to protect roll-up door. | $809 |

| Item No. | Description | |
|---|---|---|
| 1535-0085 | Rear cab wall medical cabinet with side access doors (one each side). Cabinet to be 36" high x 38" wide x 24" deep. Includes (2) roll-up doors (satin finish) and (2) adjustable shelves. Lower door openings raised to provide hand clearance. | $3,157 |
| 1535-0088 | Riser for medical cabinet. Approx 40"W x 20"D x 17"H. Front of riser to have a drop down door with two locking latches. Finish to match medical cabinet. | $945 |
| 1535-0091 | Officer side cab wheel well medical/communication cabinet approximately 42x22(25 Quest)x28. Includes external half height locking pan door with Tri-Mark latch painted job color and interior full height opening with cargo netting. Cabinet includes (3) adjustable interior pull-out shelves. | $3,300 |
| 1535-0092 | Driver side cab wheel well medical/communication cabinet approximately 42x22(25 Quest)x28. Includes external half height locking pan door with Tri-Mark latch painted job color and interior full height opening with cargo netting. Cabinet includes (3) adjustable interior (4) sided trays with 1" lips. | $3,300 |
| 1535-0093 | Compartment rear side of cab ''under riser'' type. Approx 22W x 30H opening. Includes double pan hinged door with Tri-Mark locking latches. Location: driver and officer side. | $1,362 |
| 1535-0094 | Driver side cab wheel well medical cabinet approximately 42x22(25 Quest)x28. Includes external pan door with locking Tri-Mark latch painted job color and interior full height opening with cargo net cover. Cabinet includes (2) adjustable shelves. | $2,836 |
| 1535-0095 | Officer side cab wheel well medical cabinet approximately 42x22(25 Quest)x28. Includes external pan door with locking Tri-Mark latch painted job color and interior full height opening with cargo net cover. Cabinet includes (2) adjustable shelves. | $2,836 |
| 1535-0096 | Exterior access roll up door for medical cabinet to be painted two-tone to match cab paint break (EA). | $443 |
| 1535-0097 | Medical cabinet mounted on the wheel well officer side of cab 15.5X24X21 with a vertically hinged door and locking push-button latch. | $1,038 |
| 1535-0100 | Medical cabinet mounted on the driver side rear cab wall 55X28X12 with a locking roll up door. Lower door opening raised 12" to provide space for rear heater. Includes lower ventilation front access and removable sub-floor for additional access. | $2,964 |
| 1535-0101 | Medical cabinet mounted on the officer side rear cab wall 55X28X12 with a locking roll up door. Lower door opening raised 12" to provide space for rear heater. Includes lower ventilation front access and removable sub-floor for additional access. | $2,964 |
| 1535-0102 | Medical cabinet - ALS style side access. Includes compt on officer side of cab access up high on interior with glove box latch extended cab floor and three adj shelves. Includes pass-thru under bench seat riser if equipped. | $2,556 |
| 1535-0105 | Medical cabinet mounted on the officer side rear cab wall 55(54 as required)X18X12 with a locking roll up door. Lower door opening raised approx. 12" to provide space for rear wall heaters. Includes slots and false floor. | $2,622 |
| 1535-0106 | Medical cabinet mounted on the driver side rear cab wall 55(54 as required)X18X12 with a locking roll up door. Lower door opening raised approx. 12" to provide space for rear wall heaters. Includes slots and false floor. | $2,622 |
| 1535-0110 | Medical cabinet mounted on the driver side rear cab wall 55(54 as required)X20X22 with a locking satin finish roll-up door and (3) adjustable shelves. | $2,744 |
| 1535-0111 | Medical cabinet mounted on the officer side rear cab wall 55(54 as required)X20X22 with a locking satin finish roll-up door and equipment rack. | $2,744 |
| 1535-0112 | Officer side cab wheel well medical cabinet approximately 42x22(25 Quest)x28. Includes external locking pan door painted job color and interior locking roll-up door with satin finish. Cabinet includes (2) adjustable shelves. | $2,753 |
| 1535-0114 | Medical cabinet mounted on the wheel well driver side of cab 44HX21WX16D with a locking roll up door. | $2,525 |
| 1535-0118 | Medical cabinet mounted on rear wall of cab 50X38X12 with locking roll up door. Lower door opening raised to provide hand clearance. | $3,995 |
| 1535-0119 | Medical cabinet mounted on rear wall of cab 55X40X23 with a locking roll up door. Cabinet floor to be level with top of PTO box on cab floor. | $3,289 |
| 1535-0120 | Medical cabinet mounted on the officer side rear cab wall full height (as applicable)X 18W X 12D with a locking roll up door. For use with vista cabs only. Lower door opening raised to provide hand clearance. | $2,732 |
| 1535-0121 | Medical cabinet mounted on rear wall of cab full height (as applicable)X55X22 with locking roll up door. For use with vista cabs only. Lower door opening raised to provide hand clearance. | $4,407 |

| Item No. | Description | |
|---|---|---|
| 1535-0122 | Medical cabinet mounted on the driver side rear cab wall full height (as applicable)X 18W X 12D with a locking roll up door. For use with vista cabs only. Lower door opening raised to provide hand clearance. | $2,732 |
| 1535-0124 | Medical cabinet mounted on the driver side rear cab wall 55(54 as required)X20X22 with a locking satin finish roll-up door and (3) adjustable shelves. Includes lower area raised to accomodate rear wall heater. | $2,746 |
| 1535-0125 | Medical cabinet mounted on the officer side rear cab wall 55(54 as required)X20X22 with a locking satin finish roll-up door (1) adjustable shelvf and equipment rack. Includes lower area raised to accomodate rear wall heater. | $2,746 |
| 1535-0126 | Medical cabinet mounted on the wheel well driver side of cab 32H x 21W x 24D with a interior hinged full height door with locking push-button latch; hinged inboard. | $2,216 |
| 1535-0127 | Louvers for rear wall bench seat riser to help cabinet contents to maintain cab interior temperatures. The louvers to be in three sets of three located low on forward wall. | $182 |
| 1535-0128 | ALS - Side access. Includes compts on each side of cab 16Wx20H access up high each side of interior outboard with locking glove box latches strikers high and low on ALS doors access plts on int panel of ALS doors extended cab floors smooth plate rear kick plates one adj shelf and nylatron floor overlay. Includes pass-thru under bench seat if equipped. | $3,609 |
| 1535-0129 | Reverse hinge driver and officer side ALS compartment door. Includes vertically mounted drip rail along forward area of compartment opening (as applicable)(in addition to the horizontal drip rail above the door opening; CIIX and TyphoonX cabs only). Doors to open approx. 110 degrees. | $156 |
| 1535-0130 | Driver side cab wheel well medical cabinet approximately 42 x 22 (25 Quest) x 28. Includes external locking roll-up door and interior hinged door with locking push-button latch; hinged outboard. Cabinet includes (2) adjustable shelves. | $2,092 |
| 1535-0131 | Driver side cab wheel well medical cabinet approximately 42 x 24 (27 Quest) x 28. Includes external locking roll-up door and interior hinged door with locking push-button latch. Cabinet includes (2) adjustable shelves. | $2,092 |
| 1535-0132 | Officer side cab wheel well medical cabinet approximately 42 x 24 (27 Quest) x 28. Includes external locking roll-up door and interior hinged door with locking push-button latch. Cabinet includes (2) adjustable shelves. | $2,092 |
| 1535-0133 | Cab medical/storage cabinet(s) interior finish to be Zolatone gray. | $374 |
| 1535-0135 | Driver side cab wheel well medical cabinet approximately 42 x 22 (25 Quest) x 28. Includes external locking roll-up door and interior hinged smoked lexan door with locking push-button latch. Cabinet includes (2) adjustable shelves. | $2,148 |
| 1535-0136 | Rear cab wall medical cabinet with front and side access doors (one each side). Cabinet to be 42" high x 30" wide x 32" deep (do not notch for support bracket; customer to store backboard(s) above support channel behind cabinet; install mounting bracket above cabinet). Includes (1) locking lower horizontally hinged plate door on front located below roll-up door drums (2) locking side roll-up doors (satin finish) and (2) adjustable shelves. Lower door openings raised to provide hand clearance. | $3,489 |
| 1535-0137 | Medical cabinet mounted on the wheel well driver side of cab 45H x 21W x 24D with a locking roll-back (bread box) door. | $2,602 |
| 1535-0138 | Lock box mounted in the driver side wheel well medical cabinet floor. 14X21X20 with a locking horizontally hinged door. Finish will match interior of cab. | $613 |
| 1535-0139 | ALS interior with backboard and stokes basket storage. Includes forward wall with (2) outboard locking roll-up doors for access from int (3) compts up high with glove box latches strikers high and low on ALS doors access plts on int panel of ALS doors (2) approx 5"W x 17"H x 70"L backboard sleeves and stokes basket storage below backboard sleeves on floor. | $9,817 |
| 1535-0140 | Medical cabinet mounted on the officer side rear cab wall 55(54 as required)X18X12 with a locking full height door hinged inboard. | $2,401 |
| 1535-0141 | Medical cabinet mounted on the driver side rear cab wall 55(54 as required)X18X12 with a locking full height door hinged inboard. | $2,401 |
| 1535-0143 | Lock box mounted on top of the rear wall medical cabinet. 14HX18WX12D with a locking horizontally hinged drop down door. Finish will match interior of cab. | $613 |
| 1535-0145 | ALS - Side access. Includes compts on each side of cab strikers high and low on exterior doors access plts on int panel of exterior doors full height satin finish Amdor roll-up doors on interior extended cab floor and three adj shelves. | $5,292 |
| 1535-0147 | Officer side cab wheel well medical/communication cabinet approximately 42x22(25 Quest)x28. Includes external half height locking pan door with Tri-Mark latch painted job color and interior full height opening with cargo netting. Cabinet includes (1) adjustable shelf. | $3,142 |
| 1535-0148 | All medical cabinet RUD in the cab to be locking with GEM key lock | $142 |

| Item No. | Description | |
|---|---|---|
| 1535-0149 | Officer side cab wheel well medical cabinet approximately 42x24x28. Includes external locking pan door painted job color and raised boxed interior locking roll-up door with satin finish for a 42" opening. Cabinet includes (2) adjustable shelves. Requires vista cab roof and removal of side windows. | $2,970 |
| 1535-0150 | Medical cabinet mounted on the wheel well officer side of cab 45H x 21W x 24D with a interior hinged full height door with locking push-button latch; hinged inboard. | $2,216 |
| 1535-0153 | Medical cabinet mounted on rear wall of cab 48 x 36 x 20 with a locking roll-back (bread box) door. | $4,076 |
| 1535-0154 | Medical cabinet mounted on the wheel well driver side of cab 45H x 21W x 24D with a interior hinged full height door with locking push-button latch; hinged inboard. | $2,216 |
| 1535-0155 | Medical cabinet mounted on the wheel well driver side of cab 45H x 21W x 24D with a locking roll-up door and (2) adjustable shelves. | $2,602 |
| 1535-0156 | Medical cabinet rear engine cover bolted to forward facing map box approximately 34Wx25Hx18D. To include one (1) adjustable shelf. Two (2) vertically hinged swing out doors shall allow access (to the rear) the doors shall be raised 6" up from the cabinet's base. The cabinet shall include push-button latching (2) each door (1) top and (1) bottom. | $1,455 |
| 1535-0157 | ALS - Side access. Includes compts on each side of cab strikers high and low on exterior doors access plts on int panel of exterior doors satin finish ROM roll-up doors on interior (bottom raised to riser height) extended cab floor and three adj shelves | $5,509 |
| 1535-0158 | Locking interior medical cabinet plate door (PR). Key type to be 1250. | $156 |
| 1535-0159 | Medical cabinet mounted on the wheel well officer side of cab 22X21X28 with a vertically hinged door and locking push-button latch. | $1,038 |
| 1535-0160 | ALS - Side interior cabinets. Includes full height access doors (raised for heaters if equipped) each side of interior outboard with glove box latches and three adj shelves. | $3,609 |
| 1535-0162 | Officer side cab wheel well medical cabinet approximately 42 x 24 (25 Quest) x 28. Includes external locking roll-up door and interior cargo net access. Cabinet includes (2) adjustable shelves. | $2,147 |
| 1535-0163 | Driver side cab wheel well medical cabinet approximately 42 x 24 (25 Quest) x 28. Includes external locking roll-up door and interior cargo net access. Cabinet includes (2) adjustable shelves. | $2,147 |
| 1535-0166 | The bottom of the medical cabinet(s) within the cab shall have stainless steel trim at the bottom. This kick plate trim shall be 4" in height from the floor and shall be trimmed as required for door opening(s) below 4". | $420 |
| 1535-0167 | Compartment rear side of cab below floor. Approx 9W x 19.5H opening. Includes double pan hinged doors. Long cab with medium door location only. Location: driver and officer side. | $962 |
| 1535-0169 | Medical cabinet mounted on rear wall of cab 55X38X16 with a locking roll up door. Lower door opening raised to provide hand clearance. | $3,289 |
| 1535-0171 | Medical cab contents mounted on the wheel well of cab (cabinet approximately 31"H X 44"W). There shall be a transverse vertical divider approximately 8" rearward of forward wall used to store a stokes basket. A second vertical divider approximately 10" rearward of the first divider (approximately 18" from forward wall) shall provide transverse storage. A horizontal divider shall be placed between the1st and 2nd vertical partitions it shall be placed approximately 10" up from the floor to provide approximately a 10" X 10" transverse storage area for the tripod. Above the tripod storage 2 backboards shall be stored with a vertical divider to separate them in 2 transverse storage areas approximately 5" X 21" each (directly above the tripod storage area.. Rearward of the stokes tripod and backboard transverse storage area the remaining compartment shall be shall be 1/2 transverse depth (or divided left and right). This rearward most area shall not be transverse. | $1,503 |
| 1535-0172 | Rear cab wall medical cabinet to be 50" high x 38" wide x 24" deep. Includes (1) forward facing locking roll-up door (satin finish) and (3) adjustable shelves. Lower door openings raised to provide hand clearance. | $3,157 |
| 1535-0173 | ALS - Side access. Includes compartments on each side of cab strikers high and low on exterior doors. Includes access plates on interior panel of exterior doors satin finish ROM roll-up doors on interior (bottom raised to riser height) extended cab floor and three adjustable shelves. Cabinet Includes transverse riser with backboard storage. The interior riser jets/protrudes forward between side wall ALS cabinets to allow heaters (if so equipped) not interfere or impede upon transverse storage/ pass-thru of backboards and other equipment stored under the riser in the transverse storage area. | $5,919 |
| 1535-0174 | ALS door locks - electric. Electric lock for hinged ALS doors. Wire to same electric lock system as other cab doors. | $970 |

| Item No. | Description | |
|---|---|---|
| 1535-0175 | Medical cabinet mounted on rear wall of cab 49 x 40 x 25.5. Side access lower section with cargo net and notch upper forward access with discrete compartment. Includes drop down door. | $3,537 |
| 1535-0176 | Medical cabinet mounted on rear wall of cab approximately 48 x 38 x 20 with locking roll up door. Lower door opening raised to provide hand clearance. Required with rear outboard fold down seat(s). | $4,076 |
| 1535-0177 | Compartment rear side of cab ''under riser'' type. Approx 9W x 30H opening. Includes double pan hinged door and pass through to bench if equipped. Long cab with medium door location only. Location: driver and officer side. | $962 |
| 1535-0181 | Upper rearward center vista area cabinet. Cabinet to be 48W x Vista Height x 12D. Includes horizontally hinged lift-up door. | $940 |
| 1535-0182 | Officer side cab wheel well medical cabinet approximately 42 x 24 (27 Quest) x 28. Includes external locking roll-up door and interior cargo net access. Cabinet includes (2) adjustable shelves. | $2,147 |
| 1535-0183 | Driver side cab wheel well medical cabinet approximately 42 x 24 (27 Quest) x 28. Includes external locking roll-up door and interior cargo net access. Cabinet includes (2) adjustable shelves. | $2,147 |
| 1535-0184 | Medical cabinet mounted on rear wall of cab 55 x 38 x 20 with a locking roll up door. Lower door opening raised to provide hand clearance. | $3,467 |
| 1535-0186 | Medical cabinet mounted on rear wall of cab 48 x 40 x 17 with locking roll up door. Lower door opening raised to provide hand clearance. | $4,076 |
| 1535-0187 | Driver side cab wheel well medical cabinet approximately 42 x 24 (25 Quest) x 28. Includes external locking roll-up door and interior hinged door with locking push-button latch. Cabinet includes (2) adjustable shelves. | $2,092 |
| 1535-0188 | Officer side cab wheel well medical cabinet approximately 42 x 24 (25 Quest) x 28. Includes external locking roll-up door and interior hinged door with locking push-button latch. Cabinet includes (2) adjustable shelves. | $2,092 |
| 1535-0190 | All shelves within the medical cabinet(s) shall have the a full perimeter lip IPOS. | $64 |
| 1535-0191 | All exterior access RUD for medical cabinets to be painted [#COL]. | $260 |
| 1535-0192 | The interior medical cabinet shall include stainless steel trim on the vertical corner of the cabinet where the hinge is attached. The trim shall run full height of the cabinet on this corner. The trim shall be 1" x 1" to protect and dress off this single corner's edge. | $212 |
| 1535-0193 | Medical cabinet mounted on the wheel well officer side of cab 15.5X24X21 with rear facing cargo netting. | $1,038 |
| 1535-0194 | Driver side cab wheel well medical cabinet approximately 42 x 22 (25 Quest) x 28. Includes external locking roll-up door and interior hinged door with locking push-button latch. | $1,875 |
| 1535-0195 | Officer side cab wheel well medical cabinet approximately 42 x 22 (25 Quest) x 28. Includes external locking roll-up door and interior hinged door with locking push-button latch. | $1,875 |
| 1535-0196 | Interior medical cabinet. Locate to rear of engine cover. Cabinet to be 27" high x 38" wide x 20" deep with a locking roll up door. Includes (1) adjustable shelf and forward facing drop down door. | $3,330 |
| 1535-0197 | Driver side cab wheel well medical cabinet approximately 42x22(25 Quest)x28. Includes external lift-up pan door with locking Tri-Mark latch painted job color pull strap for door and interior full height opening with cargo net cover. Cabinet includes (2) adjustable shelves. | $3,197 |
| 1535-0198 | Officer side cab wheel well medical cabinet approximately 42x22(25 Quest)x28. Includes external lift-up pan door with locking Tri-Mark latch painted job color pull strap for door and interior full height opening with cargo net cover. Cabinet includes (2) adjustable shelves. | $3,197 |
| 1535-0199 | Officer side cab wheel well medical cabinet approximately 42x22(25 Quest)x28. Includes external locking pan door painted job color and interior cargo net. | $2,675 |
| 1535-0200 | Driver side cab wheel well medical cabinet approximately 42x22(25 Quest)x28. Includes external locking pan door painted job color and interior cargo net. | $2,675 |
| 1535-0205 | Medical cabinet centered on the rear wall of the cab to be 74" wide X 62" tall. The center section on the cabinet will be 22" deep X 25" wide. At the outside edges of the 25" wide section of the cabinet will angle back until it is 10" deep at the outer most point on both sides. The cabinet is to be split into 3 separate sections with each section having (2) adjustable shelves and a locking ROM roll-up doors. Lower door opening raised to provide hand clearance. | $7,391 |
| 1535-0206 | Additional medical cabinet shelf. Location: (2) driver and (2) officer side medical cabinets. | $152 |
| 1535-0208 | Driver side cab wheel well medical cabinet approximately 42x22(25 Quest)x28. Includes external locking pan door painted job color. | $2,233 |

| Item No. | Description | |
|---|---|---|
| 1535-0210 | Officer side cab wheel well medical cabinet approximately 42 x 22 (25 Quest) x 28. Includes external locking roll-up door no interior access. Cabinet includes (2) adjustable shelves. | $2,025 |
| 1535-0211 | Medical cabinet mounted on the wheel well driver side of cab 42H x 21W x 24D with a locking roll-up door. For use with LTA cabs. | $2,602 |
| 1535-0212 | Medical cabinet mounted on the officer side rear cab wall full height (as applicable)X 18W X 12D with a locking roll up door. For use with vista cabs only. Lower door opening raised to provide hand clearance. | $2,732 |
| 1535-0213 | Medical cabinet mounted on the driver side rear cab wall full height (as applicable)X 18W X 12D with a locking roll up door. For use with vista cabs only. Lower door opening raised to provide hand clearance. | $2,732 |
| 1535-0214 | Driver side cab wheel well medical cabinet approximately 42 x 22 (25 Quest) x 28. Includes external locking roll-up door (no interior door). | $1,860 |
| 1535-0215 | Rear cab wall medical cabinet with side access doors (one each side). Cabinet to be 50" high x 38" wide x 24" deep. Includes (2) locking roll-up doors (satin finish) and (2) adjustable shelves. Lower door openings raised to provide hand clearance. | $3,126 |
| 1535-0216 | Filler panel above medical cabinet (3) sided with finish to match other medical cabinet(s). This panel shall dress off the gap between the top of the cabinet and the ceiling. | $259 |
| 1535-0217 | Officer side cab wheel well medical cabinet approximately 42 x 24 (27 Quest) x 28. Includes external locking roll-up door no interior access. Cabinet includes (2) adjustable shelves. | $2,092 |
| 1535-0218 | Driver side cab wheel well medical cabinet approximately 42 x 24 (27 Quest) x 28. Includes external locking roll-up door no interior access. Cabinet includes (2) adjustable shelves. | $2,092 |
| 1535-0219 | Driver side cab wheel well medical cabinet approximately 42x22(25 Quest)x28. Includes external pan door with locking Tri-Mark latch painted job color and interior locking roll-up door with satin finish. Cabinet includes (2) adjustable shelves. | $2,753 |
| 1535-0220 | Officer side cab wheel well medical cabinet approximately 42x22(25 Quest)x28. Includes external pan door with locking Tri-Mark latch painted job color and interior locking roll-up door with satin finish. Cabinet includes (2) adjustable shelves. | $2,753 |
| 1535-0221 | Rear cab wall medical cabinet with side access on each side using black cargo netting. Cabinet to be 45" wide X 16"deep X full height (as applicable). Includes cabinet front access door using a smooth plate vertically hinged double door with thumb latches and (3) adjustable shelves. The cabinet will not be notched around rear wall channel. | $3,084 |
| 1535-0222 | Driver side cab wheel well medical cabinet approximately 42 x 22 (25 Quest) x 28. Includes external locking pan door painted job color. Cabinet includes (2) adjustable shelves. | $2,509 |
| 1535-0223 | Officer side cab wheel well medical cabinet approximately 42 x 22 (25 Quest) x 28. Includes external locking pan door painted job color. Cabinet includes (2) adjustable shelves. | $2,509 |
| 1535-0224 | Lock box mounted in the driver side wheel well medical cabinet floor. 8X21X20 with a locking horizontally hinged door. Finish will match interior of cab. | $613 |
| 1535-0225 | Special medical cabinet on rear wall. Includes lower side access only with (2) adjustable shelves with 1" lips all the way around upper front area with drop down door (approx. 12H x 35W opening) with (2) non-locking push buttons and louvers for compartment lower sides open with cargo nets attached with clips in lieu of snaps. | $3,236 |
| 1535-0226 | Rear cab wall medical cabinet with side access. Cabinet to be 32" high x 32" wide x 24" deep. Includes (2) black cargo nets and (1) adjustable shelf. | $2,256 |
| 1535-0227 | Additional medical cabinet shelf. Location: rear wall medical cabinet. | $152 |
| 1535-0228 | ALS side access with full height exterior doors. Includes strikers high and low on ALS doors access plts on int panel of ALS doors (2) horizontal backboard sleeves approx 12" above floor accessed from officer side (2) stair chair sleeves above backboards accessed from officer side and (2) stokes backets sleeves above stair chairs accessed from both sides. | $8,819 |
| 1535-0229 | Medical cabinet mounted on rear wall of cab 55 x 40 x 15 with a locking roll up door. Lower door opening raised to provide hand clearance. | $3,308 |
| 1535-0230 | Lock box in rear wall medical cabinet; floor mounted. 12H X FW X 12D with a locking horizontally hinged drop down door. Finish will match interior of cab. | $613 |
| 1535-0232 | Reverse hinge driver and officer side exterior medical cabinet compartment door. Includes vertically mounted drip rail along forward area of compartment opening (as applicable) (in addition to the horizontal drip rail above the door opening). | $156 |
| 1535-0234 | Driver side cab wheel well medical cabinet approximately 42x22(25 Quest)x28. Includes external locking pan door painted job color. No shelves provided. | $2,233 |
| 1535-0236 | Compartment rear side of cab ''under riser'' type. Approx 9W x 30H opening. Includes single pan hinged door with 1/4 turn d-ring handles. Long cab with medium door location only. Location: driver and officer side. | $962 |

| Item No. | Description | |
|---|---|---|
| 1535-0239 | ALS side transverse access. Includes strikers high and low on ALS doors access plts on int panel of ALS doors (2) equally spaced vertical paritions up high for backboard sleeves/shovel/misc (1) floor mounted SlideMaster bi-directional tray and (1) transverse adjustable shelf between tray and upper storage. Includes extended floor(s). | $5,222 |
| 1535-0240 | Medical cabinet mounted on rear wall of cab full height (as applicable)X40X20 with locking roll up door. For use with vista cabs only. Lower door opening raised to provide hand clearance. | $4,407 |
| 1535-0242 | Driver side cab wheel well medical cabinet approximately 42 x 22 (25 Quest) x 28. Includes external locking pan door painted job color with Tri-Mark latch. Cabinet includes (1) adjustable shelf. | $2,484 |
| 1535-0243 | Officer side cab wheel well medical cabinet approximately 42 x 22 (25 Quest) x 28. Includes external locking pan door painted job color with Tri-Mark latch. Cabinet includes (1) adjustable shelf. | $2,484 |
| 1535-0247 | Interior medical cabinet. Locate to rear of engine cover. Cabinet to be 22" H x 45" W x 20" D. Cabinet to be open rear with 1" lower lip and a cargo net style cover over rear opening. Inlcudes (1) adjustable shelf. | $1,237 |
| 1535-0248 | Interior medical cabinet. Locate to rear of engine cover. Cabinet to be 20.75" H x 45" W x 22" D. Cabinet to have a 2" lip around top open rear with 1" lower lip cargo net style cover over rear opening and (1) adj shelf. Interior to be DA finish. | $1,443 |
| 1535-0249 | Interior medical cabinet. Locate to rear of engine cover. Cabinet to be 32" high x 45" wide x 18" deep with sliding Lexan doors. Includes (1) adjustable shelf. | $3,133 |
| 1535-0250 | Officer side cab wheel well medical cabinet approximately 26 x 22 (25 Quest) x 28. Includes external locking pan door painted job color with Trimark exterior latch dual nader pins and interior hinged full height door with locking push-button latch. | $3,043 |
| 1535-0251 | Reverse hinge driver and officer side ALS compartment door. Doors to open approx. 110 degrees. For use with flush doors on QST2. | $288 |
| 1535-0254 | Rubber floor matting on interior of all medical cabinet floors. | $205 |
| 1535-0255 | Compartment rear side of cab ''under riser'' type. Approx 9W x 30H opening. Includes double pan hinged door. Long cab with medium door location only. Location: driver side. | $962 |
| 1535-0256 | Officer side cab wheel well medical cabinet approximately 42x22(25 Quest)x28. Includes external locking pan door painted job color and interior cargo net. Cabinet includes (2) adjustable shelves. | $2,836 |
| 1535-0257 | Driver side cab wheel well medical cabinet approximately 42x22(25 Quest)x28. Includes external locking pan door painted job color and interior cargo net. Cabinet includes (2) adjustable shelves. | $2,836 |
| 1535-0258 | Medical cabinet mounted on rear wall of cab 63X40X20 with a front locking roll up door sides open with cargo nets attached with clips in lieu of snaps and (2) adjustable shelves with 1" lips all the way around. Lower door opening raised 12" to provide area for rear heaters. Includes lower ventilation front access and removable sub-floor for additional access. | $3,958 |
| 1535-0259 | Officer side cab wheel well medical cabinet approximately 42 x 22 (25 Quest) x 28. Includes external locking pan door painted job color. Cabinet includes (1) adjustable roll-out tool board | $3,406 |
| 1535-0260 | Driver side cab wheel well medical cabinet approximately 42 x 22 (25 Quest) x 28. Includes external locking pan door painted job color. Cabinet includes (1) adjustable roll-out tool board | $3,406 |
| 1535-0263 | ALS - Side access. Includes compts on each side of cab with exterior locking roll-up doors extended cab floor and three adj shelves in each cabinet. | $5,292 |
| 1535-0264 | ALS - Side access. Includes compts on each side of cab strikers high and low on exterior doors access plts on int panel of exterior doors satin finish ROM roll-up doors on interior extended cab floor and three adj shelves. Includes pass-thru under bench seat (if equipped). | $5,509 |
| 1535-0265 | Medical cabinet mounted on rear wall of cab 55X44X20 with angled corners and locking roll up door. Lower door opening raised to provide hand clearance. | $4,076 |
| 1535-0268 | Officer side cab wheel well medical cabinet approximately 26 x 22 (25 Quest) x 28. Includes external locking pan door painted job color with Trimark exterior latch dual nader pins and interior hinged full height door hinged outboard with locking push-button latch. | $3,043 |
| 1535-0269 | Medical cabinet mounted on rear wall of cab 48 x 40 x 12 with locking roll up door. Lower door opening raised to provide hand clearance. | $4,076 |
| 1535-0270 | Officer side cab wheel well medical cabinet approximately 42x22(25 Quest)x28 divided into (2) areas. Includes half height external locking pan door painted job color and upper interior cargo net. Cabinet includes exterior access only for lower and interior access only for upper. | $2,836 |

| Item No. | Description | |
|---|---|---|
| 1535-0271 | Driver side cab wheel well medical cabinet approximately 42x22(25 Quest)x28 divided into (2) areas. Includes half height external locking pan door painted job color and upper interior cargo net. Cabinet includes exterior access only for lower and interior access only for upper. | $2,836 |
| 1535-0272 | Medical cabinet mounted on rear wall of cab 50X36X14 with non-locking roll up door. Cabinet mounted at minimum 18" above floor with 3x3 forward post mounts. Vista cabs only. | $3,995 |
| 1535-0273 | Compartment dividers with rubber floor matting on interior of vista cabinet floor. | $257 |
| 1535-0275 | Medical cabinet mounted on rear wall of cab 55 (54 as required) x 30 x 20 with a locking roll up door. Lower door opening raised approx. 12" to provide space for rear wall heaters and notch for transverse riser. Includes louvers and false floor. | $3,911 |
| 1535-0276 | Medical cabinet mounted on rear wall of cab 40.5X36X16 with non-locking roll up door. Cabinet mounted at approx. 16" above floor with 3x3 forward post mounts. Includes (2) adjustable shelves. | $3,995 |
| 1535-0278 | ALS - Side access. Includes compts on each side of cab strikers high and low on ALS doors access plts on int panel of ALS doors with Tri-Mark latches extended cab floors smooth plate rear kick plates and two adj shelves. Includes pass-thru under bench seat if equipped. | $3,905 |
| 1535-0279 | Officer side cab wheel well medical cabinet approximately 26 x 22 (25 Quest) x 28. Includes external locking pan door painted job color with Trimark exterior latch and dual nader pins. No interior access. | $3,043 |
| 1535-0280 | Interior medical cabinet. Locate to rear of engine cover. Cabinet to be 26" H x 34" W x 14" D. Cabinet to be open rear with a sweep out floor and a cargo net style cover over rear opening. Inlcudes (1) adjustable shelf. | $1,237 |
| 1535-0282 | Rear cab wall medical cabinet with side access. Cabinet to be 50" high x 38" wide x 24" deep. Includes (2) black cargo nets and (3) adjustable shelves. | $2,718 |
| 1535-0283 | ALS - Side access. Includes compartments on each side of cab strikers high and low on exterior doors. Includes access plates on interior panel of exterior doors satin finish ROM roll-up doors with 23" wide opening on interior (bottom raised to riser height) extended cab floor and three adjustable shelves. Cabinet Includes transverse riser with backboard storage. The interior riser jets/protrudes forward between side wall ALS cabinets to allow heaters (if so equipped) not interfere or impede upon transverse storage/ pass-thru of backboards and other equipment stored under the riser in the transverse storage area. | $5,919 |
| 1535-0284 | Rear cab wall medical cabinet with side access doors (one each side). Cabinet to be 32" high x 38" wide x 24" deep. Includes (2) locking roll-up doors (satin finish) and (1) adjustable shelf front bolt-on access panel and 1"X1" angle on perimeter of top. Lower door openings raised to provide hand clearance. | $3,157 |
| 1535-0287 | Driver side cab wheel well medical cabinet approximately 42 x 24 (27 Quest) x 28. Includes external locking pan door painted job color and interior hinged full height door with locking push-button latch. Cabinet includes (2) adjustable shelves. | $2,608 |
| 1535-0288 | Officer side cab wheel well medical cabinet approximately 42 x 24 (27 Quest) x 28. Includes external locking pan door painted job color and interior hinged full height door with locking push-button latch. Cabinet includes (2) adjustable shelves. | $2,608 |
| 1535-0289 | Driver side cab wheel well medical cabinet approximately 32 x 22 (25 Quest) x 28. Includes external locking pan door painted job color. Cabinet includes (1) adjustable shelf. | $2,509 |
| 1535-0290 | Officer side cab wheel well medical cabinet approximately 32 x 22 (25 Quest) x 28. Includes external locking pan door painted job color. Cabinet includes (1) adjustable shelf. | $2,509 |
| 1535-0291 | Medical cabinet mounted on the wheel well officer side of cab 45H x 21W x 24D with a interior full height opening with cargo net restraint. | $2,216 |
| 1535-0292 | Medical cabinet mounted on rear wall of cab 55 x 40 x 20 with a locking roll up door. Lower door opening raised 12" to provide area for rear heaters. Includes lower ventilation front access and removable sub-floor for additional access. | $3,467 |
| 1535-0296 | A "T" shaped medical cabinet shall be provided for max available space and accommodate outboard seating X 22" deep. The lower space shall provide transverse storage for each cab side access door. The center area shall be closed off from the transverse space below and include a non-locking roll up door with (4) adjustable shelves. The upper portion shall include (2) compartments 22" deep. The compartment shall have an inside dimension of 32" wide x 16" tall. Inside provide a centered vertical divider with (2) mouse hole notches at top & bottom to pass USB cable from charging ports and a shelf located to the outboard side of the divider. The access doors shall be horizontally hinged lift-up doors with non-locking thumb action lever type latches and moon spring hold open device. Below the outboard compartments a head bump pad shall be provided. Finish: Shall be consistent with cab interior. Additional EON lights to be provided as applicable to illuminate all areas. | $6,877 |

| Item No. | Description | |
|---|---|---|
| 1535-0297 | Polished stainless steel trim on bottom and vertical edge of riser height or below floor exterior cab compartment(s). | $155 |
| 1535-0298 | Interior medical cabinet. Locate to rear of engine cover. Cabinet to be 30" high x 38" wide x 20" deep with a non-locking roll up door. Includes (1) adjustable shelf. | $3,236 |
| 1535-0299 | Medical cabinet mounted on the wheel well driver side of cab 26H x 21W x 24D with an interior hinged full height door with locking d-ring. | $2,168 |
| 1535-0300 | Medical cabinet mounted on the wheel well officer side of cab 26H x 21W x 24D with an interior hinged full height door with locking d-ring. | $2,168 |
| 1535-0302 | Medical cabinet mounted on the wheel well officer side of cab 32H x 21W x 24D with a interior full height opening and cargo net restraint. | $2,216 |
| 1535-0303 | Medical cabinet mounted on rear wall of cab 48 x 40 x 20 with locking roll up door. Includes (2) adjustable shelves and a floor mounted roll-out tray. Lower door opening raised to provide hand clearance. | $4,759 |
| 1535-0304 | Special medical cabinet on rear wall. Includes lower side access only with (2) adjustable shelves with 1" lips all the way around upper front area with drop down door (approx. 12H x 35W opening) with (2) locking push buttons and louvers for compartment lower sides open with cargo nets (1" square openings) attached with clips in lieu of snaps. | $3,236 |
| 1535-0305 | Interior medical cabinet. Locate to rear of engine cover. Cabinet to be 30" high x 38" wide x 20" deep with single pan locking double doors. Includes (2) adjustable shelves. | $3,109 |
| 1535-0307 | Compartment rear side of cab (PR) without door for pump can storage. Compts to be approx 10.5" W x 30.5" H x 14" D. For use on 67.5" CII cab with med doors. | $3,268 |
| 1535-0308 | Cab medical/storage cabinet(s) finish to be Scorpion black. Includes interior/exterior of cabinet and shelves/trays if equipped. | $162 |
| 1535-0309 | Cabinet mounted on rear wall of cab 48 x 32 x 24 with a non-locking roll up door. Lower door opening raised 12"-14" to provide area for rear auxiliary component(s). Includes lower ventilation front access and removable sub-floor for additional access. | $4,335 |
| 1535-0311 | Officer side cab wheel well medical cabinet approximately 26 x 22 (25 Quest) x 28. Includes external locking pan door painted job color and interior cargo net. | $2,576 |
| 1535-0312 | Driver side cab wheel well medical cabinet approximately 26 x 22 (25 Quest) x 28. Includes external locking pan door painted job color and interior cargo net. | $2,576 |
| 1535-0313 | All roll-up medical cabinet doors selected on the cab to be Hansen brand. | $276 |
| 1535-0314 | Cabinet mounted on the officer side rear cab wall 55(54 as required)X18X12 with a non-locking roll up door. Lower door opening raised to provide hand clearance. | $2,622 |
| 1535-0315 | Cabinet mounted on the driver side rear cab wall 55(54 as required)X18X12 with a non-locking roll up door. Lower door opening raised to provide hand clearance. | $2,622 |
| 1535-0316 | LINE-X package: Bolt On Cab medical/storage cabinet(s) finish shall have LINE-X coating. Includes interior/exterior of cabinet and shelves/trays if equipped. Cabinets welded to the cab shall have the same finish as cab interior. | $514 |
| 1535-0317 | Medical cabinet mounted on the wheel well officer side of cab 42H x 21W x 24D with a locking roll-up door. | $2,602 |
| 1535-0319 | Driver side cab wheel well medical cabinet approximately 30 x 24 (27 Quest) x 28. Includes external locking pan door painted job color. No interior access. | $2,576 |
| 1535-0320 | Officer side cab wheel well medical cabinet approximately 30 x 24 (27 Quest) x 28. Includes external locking pan door painted job color. No interior access. | $2,484 |
| 1535-0321 | Reflective [#COL] 3M Diamond Grade striping positioned in the "A" formation located on the medical cabinet pan door panels. | $313 |
| 1535-0322 | Interior medical cabinet. Locate to rear of engine cover facing aft. Cabinet to be 26" high x 34" wide x 14" deep. Includes: vertical single pan double doors locking push button lever type latches & (1) adjustable shelf. | $3,109 |
| 1535-0323 | Medical cabinet mounted on rear wall of cab 52X35X16 with a locking upper and lower drop down doors. Upper door opening approx. 13" tall with side ventilation. Lower opening to include (2) adjustable shelves. | $3,289 |
| 1535-0324 | Cabinet mounted on rear wall of cab 48 x 32 x 24 with a locking roll up door. Lower door opening raised 12"-14" to provide area for rear auxiliary component(s). Includes lower ventilation front access and removable sub-floor for additional access. | $4,335 |
| 1535-0326 | [#COL] Reflexite V98 striping positioned in the "A" formation located on the cab medical cabinet door panels. | $252 |
| 1535-0327 | Upper rearward split vista cabinet (PR). Cabinets to be full height and width of split vista rearward of rear cab doors. Includes (1) horizontally hinged lift-up door on each cabinet. | $2,063 |
| 1535-0328 | Driver side cab wheel well medical cabinet approximately 42x22(25 Quest)x28. Includes external locking pan door painted job color. No shelves provided; tracks only. | $2,336 |

| Item No. | Description | |
|---|---|---|
| 1535-0329 | Medical cabinet mounted on the wheel well officer side of cab 45H x 21W x 18D(approx) with a locking roll-up door. | $2,602 |
| 1535-0330 | Medical cabinet mounted on the wheel well driver side of cab 45H x 21W x 18D(approx) with a locking roll-up door. | $2,602 |
| 1535-0331 | Medical cabinet mounted on officer side inboard of rear wall cab 52X20X20 with a locking roll up door facing officer side. Lower door opening raised to provide hand clearance. | $3,289 |
| 1535-0332 | Compartment rear side of cab. Approx 9W x 42H opening. Includes single pan hinged doors. Long cab with medium door location only. Location: driver and officer side. | $1,285 |
| 1535-0334 | LINE-X package: Cabinet(s) behind the rear cab door (non transverse) shall have LINE-X coating. Includes interior/exterior of cabinet and shelves/trays if equipped. | $514 |
| 1535-0335 | Cabinet mounted on rear wall of cab 48 x 32 x 20 with a locking roll up door. Lower door opening raised 12"-14" to provide area for rear auxiliary component(s). Includes lower ventilation front access and removable sub-floor for additional access. | $4,335 |
| 1535-0336 | Medical cabinet mounted on the wheel well officer side of cab 36H x 21W x 24D with a interior full height opening with cargo net restraint. | $2,216 |
| 1535-0337 | Interior medical cabinet. Locate to rear of engine cover. Cabinet to be 20.75" H x 45" W x 22" D. Cabinet to have a 2" lip around top open rear with 1" lower lip cargo net style cover over rear opening and (1) adj shelf. | $1,443 |
| 1535-0339 | Cabinet mounted on rear wall of cab 52 x 32 x 24 with a locking roll up door. Lower door opening raised 12"-14" to provide area for rear auxiliary component(s). Includes lower ventilation front access and removable sub-floor for additional access. | $4,527 |
| 1535-0340 | Rear cab wall medical cabinet with side access doors (one each side). Cabinet to be 50" high x 32" wide x 24" deep. Includes (2) locking roll-up doors (satin finish) and (3) adjustable shelves. Lower door openings raised to provide hand clearance. | $3,157 |
| 1535-0341 | Cabinet mounted on the wheel well driver side of cab 26H x 21W x 24D with an interior full height cargo net cover. | $2,168 |
| 1535-0342 | Cabinet mounted on the wheel well officer side of cab 26H x 21W x 24D with an interior full height cargo net cover. | $2,168 |
| 1535-0343 | Compartment rear side of cab. Approx 9W x full height opening. Includes single pan hinged door with dual d-rings. Long cab with medium door location only. Location: driver and officer side. | $1,808 |
| 1535-0344 | Medical cabinet mounted on the wheel well driver side of cab 45H x 21W x 24D with a interior full height opening with cargo net restraint. | $2,216 |
| 1535-0345 | Officer side cab wheel well medical cabinet approximately 26 x 22 (25 Quest) x 28. Includes external locking pan door with Tri-Mark exterior latch painted job color and interior cargo net. | $2,576 |
| 1535-0346 | Driver side cab wheel well medical cabinet approximately 26 x 22 (25 Quest) x 28. Includes external locking pan door with Tri-Mark exterior latch painted job color and interior cargo net. | $2,576 |
| 1535-0347 | Officer side cab wheel well medical cabinet approximately 42x22(25 Quest)x28. Includes external locking pan door painted job color. | $2,579 |
| 1535-0348 | Medical cabinet mounted on rear wall of cab 50" x 36" x 24" with a locking roll up door. Lower door opening raised approx. 12" - 14" to provide area for component installation. Includes lower ventilation and removable sub-floor for additional access. | $3,289 |
| 1535-0350 | Medical cabinet mounted on rear wall of cab full height x 38 x 24 with a locking roll up door. Lower door opening raised to provide hand clearance. | $4,335 |
| 1535-0351 | Medical cabinet mounted on the wheel well officer side of cab 45H x 21W x 24D with a interior full height opening cargo net restraint and no shelves. | $2,024 |
| 1535-0352 | Medical cabinet mounted on the wheel well driver side of cab 26H x 21W x 24D with interior cargo netting and (2) adj shelves. | $2,312 |
| 1535-0353 | Rear cab wall storage cabinet with side access doors (one each side). Cabinet to be 50" high x 32" wide x 24" deep. Includes (2) roll-up doors (satin finish) and (3) adjustable shelves. Lower door openings raised to provide hand clearance. | $3,157 |
| 1535-0354 | Non-standard cargo net restraints. Restraints to be [#LOC]. | $257 |
| 1535-0355 | Medical cabinet mounted on the officer side rear cab wall 55(54 as required)X20X22 with a locking satin finish roll-up door and (3) adjustable shelves. Includes lower area raised to accomodate rear wall heater. | $2,746 |
| 1535-0356 | Medical cabinet mounted on rear wall of cab 40 x 36 x 18 with locking roll up door. Lower door opening raised to provide hand clearance. | $4,076 |
| 1535-0357 | Interior medical cabinet. Locate to rear of engine cover. Cabinet to be 30" high x 38" wide x 20" deep with a locking roll up door. Includes forward facing drop down door. | $3,234 |
| 1535-0361 | Medical cabinet mounted on rear wall of cab full height x 38 x 26 with a locking roll up door. Lower door opening raised to provide hand clearance. | $4,335 |

| Item No. | Description | |
|---|---|---|
| 1535-0363 | Cargo net for inside compartment. Net to permanently fasten on rearward wall just inside the exterior door opening and fasten with buckle straps on forward wall just inside the exterior door opening. Cargo netting will be approximately 2" x 2" squares. Location: wheel well medical cabinet. | $830 |
| 1535-0364 | ALS - Side access. Includes compts on each side of cab with full height doors strikers high and low on ALS doors access plts on int panel of ALS doors with Tri-Mark D-Paddle latches extended cab floors smooth plate rear kick plates and two adj shelves. Includes pass-thru under bench seat if equipped. | $4,385 |
| 1535-0366 | Rear cab wall medical cabinet with side access doors (one each side). Cabinet to be 56" high x 38" wide x 24" deep. Includes (2) locking roll-up doors (satin finish) and (3) adjustable shelves. Lower door openings raised to provide hand clearance. | $3,260 |
| 1535-0367 | Louvers for vista medical cabinet. Locate louvers on lift-up doors. | $354 |
| 1535-0368 | All interior access RUD for medical cabinets to be painted job color. | $260 |
| 1535-0369 | Rear cab wall medical cabinet with side access doors (one each side). Cabinet to be 56" high x 38" wide x 29" deep. Includes (2) locking roll-up doors (satin finish) and (2) adjustable shelves. Lower door openings raised to provide hand clearance. | $3,260 |
| 1535-0372 | Rear cab wall medical cabinet with side access doors (one each side). Cabinet to be 54" high x 38" wide x 29" deep. Includes (2) locking roll-up doors (satin finish) and (2) adjustable shelves. Lower door openings raised to provide hand clearance. | $3,260 |
| 1535-0374 | Driver side cab wheel well medical cabinet approximately 26 x 24 (27 Quest) x 28. Includes external locking pan door painted job color and interior cargo net. | $2,768 |
| 1535-0375 | Officer side cab wheel well medical cabinet approximately 42x24(27 Quest)x28. Includes external locking pan door painted job color and interior cargo net. Cabinet includes (1) adjustable shelf. | $3,028 |
| 1535-0377 | Interior medical cabinet. Locate to rear of engine cover. Cabinet to be 21" H x 45" W x 22" D. Cabinet to include a permanent shelf 4" from top side to side divider on shelf centered forward facing drop down door at shelf level and cargo net style cover over rear opening. Interior to be DA finish. | $1,923 |
| 1535-0378 | Medical cabinet mounted on the driver side rear cab wall FHX20X22 with a locking satin finish roll-up door and (3) adjustable shelves. Includes lower area raised to accomodate rear wall heater. | $2,870 |
| 1535-0379 | Medical cabinet mounted on the officer side rear cab wall FHX20X22 with a locking satin finish roll-up door and (3) adjustable shelves. Includes lower area raised to accomodate rear wall heater. | $2,870 |
| 1535-0380 | Driver side cab wheel well medical cabinet approximately 42x22(25 Quest)x28. Includes external pan door painted job color(s) with black locking Tri-Mark latch and interior full height opening with cargo net cover. Cabinet includes (2) adjustable shelves. | $2,836 |
| 1535-0381 | Officer side cab wheel well medical cabinet approximately 42x22(25 Quest)x28. Includes external pan door painted job color(s) with black locking Tri-Mark latch and interior full height opening with cargo net cover. Cabinet includes (2) adjustable shelves. | $2,836 |
| 1535-0383 | Officer side cab wheel well medical cabinet approximately 26 x 24 (27 Quest) x 28. Includes external locking pan door painted job color and interior cargo net. | $2,768 |
| 1535-0384 | Medical cabinet mounted on the wheel well officer side of cab 39H x 21W x 24D with a interior full height opening with cargo net restraint. | $2,216 |
| 1535-0385 | Interior medical cabinet. Locate to rear of engine cover. Cabinet to be 21" H x 45" W x 22" D. Cabinet to include a permanent shelf 4" from top side to side divider on shelf centered forward facing drop down door at shelf level (1) adjustable shelf in rear section and cargo net style cover over rear opening. Interior to be DA finish. | $2,134 |
| 1535-0387 | Driver side cab wheel well medical cabinet approximately 45 (interior) x 24 (27 Quest) x 28. Includes external locking pan door painted job color and interior hinged full height door with locking push-button latch. Cabinet includes (2) adjustable shelves. | $3,469 |
| 1535-0388 | Officer side cab wheel well medical cabinet approximately 45 (interior) x 24 (27 Quest) x 28. Includes external locking pan door painted job color and interior hinged full height door with locking push-button latch. Cabinet includes (2) adjustable shelves. | $3,469 |
| 1535-0389 | Driver side cab wheel well medical cabinet approximately 26 x 22 (25 Quest) x 28. Includes external locking pan door painted job color with Tri-Mark latch. No interior access. | $2,484 |
| 1535-0390 | Officer side cab wheel well medical cabinet approximately 26 x 22 (25 Quest) x 28. Includes external locking pan door painted job color with Tri-Mark latch. No interior access. | $2,484 |
| 1540-0001 | Map box dual storage | $570 |
| 1540-0003 | For Typhoon chassis only | $523 |
| 1540-0005 | Map Box Rectangular Tall | $535 |

| Item No. | Description | |
|---|---|---|
| 1540-0006 | Map box suspended with drop-down doors. | $588 |
| 1540-0007 | Map Box with Angle Storage. Angled side to face officer. | $507 |
| 1540-0008 | Map box suspended with officer's map storage. | $709 |
| 1540-0014 | All map boxes in the cab to be swirled with clear coat | $588 |
| 1540-0015 | Map box suspended with drop-down door. Box offset to rear to allow engine access door to open further. | $588 |
| 1540-0016 | Map box suspended with officer front drop down door with (4) slots and driver rear drop down door with (4) slots. | $698 |
| 1540-0017 | Map box with angled top on rear of engine cover. Includes lift up door with gas shock. | $581 |
| 1540-0018 | Map Suspended with Officer's Map Storage. (6) storage slots for 4" binders (1) additional storage slot for county custom map book. | $709 |
| 1540-0020 | Map box with 3 compartments on rear of engine cover. Forward compartment has angle lift-up door with gas shocks. Rear of box has top and rear compartments with hinged doors. | $1,188 |
| 1540-0021 | Map box suspended 34" wide with (3) drop down doors. | $698 |
| 1540-0023 | Map box suspended rear facing with drop down door. Box offset to rear to allow engine access door to open further. | $588 |
| 1540-0024 | Map / medical box on rear of engine cover. Front has 2 map boxes w/3 horz slots ea and drop down doors. Rear has 2 compts w/vert hinged doors. | $2,399 |
| 1540-0025 | Map box suspended with officer's map storage. | $709 |
| 1540-0026 | Locking map box door. Map box door to include a locking push-button latch. Key type to be CH751. | $83 |
| 1540-0027 | Map box suspended with officer front drop down door with (4) slots and driver rear drop down door with (2) slots. | $698 |
| 1540-0028 | Map box suspended with full width lower storage and officer's map storage. | $709 |
| 1540-0031 | Map Box Suspended with Drop Down Door 17H x 34W x 14D. Box offset to rear to allow engine access door to open further. | $710 |
| 1540-0032 | Map box suspended with driver's map storage. | $709 |
| 1540-0034 | Map box suspended 37" wide with (3) drop down doors. | $698 |
| 1540-0035 | Rear engine cover rectangular map box 12H X 13.75W X 31L. Includes (3) slots driver open center (2) slots officer side and cargo net cover. | $979 |
| 1540-0037 | Map box suspended with drop-down doors 15" H x 37.5" W x 14" D with (4) slots each side. | $588 |
| 1540-0039 | Map box / rear engine cover medical cabinet. Includes forward facing map box with 2 drop down doors and incorporated rear engine cover medical cabinet with roll-up door. | $4,521 |
| 1540-0040 | Map box suspended with drop down doors. 34"W x 10"H x 12"D | $588 |
| 1540-0042 | Map box suspended with driver and officer front drop down door and officer rear drop down door. Includes (4) slots on officer side and map storage on driver side. | $814 |
| 1540-0045 | Map box rectangular with rear hinged door. 11"L (front to rear) x 20"W (side to side) x 6"D. | $507 |
| 1540-0047 | Map box with 3 compartments on rear of engine cover. 2 compartments on top will be hinged back to back. Forward compartment has lift-up door with gas shocks. Rear of box has top and rear compartments with hinged doors. Lower compartment will be approx 7" high. | $1,188 |
| 1540-0048 | Rear engine cover storage box with cargo net cover. 44"W x 24"H x 14"D with rear facing opening. | $1,091 |
| 1540-0049 | Map box suspended with drop down doors. Driver door approx. 15.5"W officer door approx. 19.5"W. 35"W x 11"H x 13.5"D. Includes (1) vertical partition 4" from officer side and (1) vertical partition 15.25" from driver side. Driver side and center sections to each have a horizontal shelf centered. | $588 |
| 1540-0051 | Map box suspended with drop-down doors. 34"W x 9.50"H x 12"D. | $588 |
| 1540-0056 | Rear engine cover rectangular map box angled to match upper and lower vertical engine cover. 11"H X 12"W (front to rear) X 42.5"L. Includes (6) storage slots approx. 14"L x 6"W with (3) retaining straps front to rear (1) over each area. | $979 |
| 1540-0057 | Map box suspended with driver and officer front and rear drop down doors. Includes (4) slots on each side. | $814 |
| 1540-0063 | Map box suspended with (9) vertical slots. | $709 |
| 1540-0064 | Map box suspended with (9) vertical slots and (1) full width horizontal slot. | $814 |
| 1540-0065 | Map box suspended 37" wide with (3) drop down doors. | $807 |
| 1540-0066 | Map box suspended with officer's map storage. Includes (4) equal slots on officer side and (1) driver slot equal to top officer slot. | $709 |
| 1540-0069 | Map box suspended 34"W x 6"H x 12"D with driver and officer front and rear drop down doors. Includes (2) slots on each side. Locate just below AC. | $814 |
| 1540-0071 | Map box suspended with (1) drop down door. 14"W x 9.5"H x 12"D | $545 |
| 1540-0073 | Map box suspended with drop-down doors and (1) shelf each side. 34"W x 9.50"H x 12"D. | $588 |
| 1540-0075 | Map box suspended with drop down doors. 34"W x 6"H x 13.5"D | $588 |

| Item No. | Description | |
|---|---|---|
| 1540-0079 | Map box suspended with drop-down doors. Approximately 34"W x 9.50"H x 13"D. | $805 |
| 1540-0080 | Map box suspended with drop-down door installed on the rear of the box to provide accessibility from the rear. Box offset to rear to allow engine access door to open further. | $588 |
| 1540-0081 | Rear engine cover rectangular map box approximately 10"H X 14"W X 14"D. The depth shall have (2) dividers equally spaced. Open top with cargo net cover. | $452 |
| 1540-0082 | Map box suspended with drop-down doors. 34"W x 9.50"H x 12"D. (3) Slot officer's side open driver's side. | $588 |
| 1540-0083 | Map box rear facing. Lids only to be swirl plated with clear coat. Reference 581402. | $1,168 |
| 1540-0085 | Map box suspended with drop-down doors and (1) shelf each side. Box offset to rear to allow engine access door to open further. | $588 |
| 1540-0086 | Map box suspended with rear facing sliding Lexan doors 15" H x 34" W x 12" D. Includes center partition and officer side shelf centered. | $710 |
| 1540-0087 | Map box suspended with officer's map storage with quarter latches. | $709 |
| 1540-0089 | Map box/radio cabinet suspended with drop-down doors 34x14x12. Includes louvers on officer side lower door side wall and floor. Box offset to rear to allow engine access door to open further. | $855 |
| 1540-0090 | Map box suspended with drop-down doors. Includes center vertical divider only. | $588 |
| 1540-0091 | Map box suspended with drop-down doors and (1) shelf each side. 24"W x 9.50"H x 12"D. | $588 |
| 1540-0092 | Map box binder storage approx. 13"H x 11"W x 4" front to back. Location: on interior facing wall of officer side medical cabinet offset as far forward as possible toward 3x3 post. Includes lid with mechanical latch. To match cab interior color. | $278 |
| 1540-0093 | Map box suspended with drop-down doors. Includes (1) adjustable shelf (no partition). Box offset to rear to allow engine access door to open further. | $588 |
| 1540-0094 | Map box suspended with rear facing drop-down doors and (1) shelf each side. 34"W x 9.50"H x 12"D. | $588 |
| 1540-0095 | Map box suspended with (1) drop-down door (1) full width 2" high upper shelf center lower vertical divider and (1) shelf each side of divider. 34"W x 9.50"H x 12"D. | $588 |
| 1540-0096 | Map box suspended with drop-down doors 15" H x 37.5" W x 14" D with (3) slots officer and (2) slots driver. | $588 |
| 1540-0098 | Map box suspended with driver and officer front drop down door and driver rear drop down door. Includes (3) slots on officer side and map storage on driver side. | $814 |
| 1540-0100 | Map box suspended with drop down doors. 34"W x 6"H x 13.5"D. (1) officer shelf only. | $588 |
| 1540-0102 | Map box suspended with drop-down doors. 37.5"W x 9.50"H x 12"D. (2) Slot officer's side open driver's side. | $588 |
| 1540-0103 | Map box suspended with drop down doors. 34"W x 6"H x 12.5"D. Includes full width upper shelf and lower vertical divider. | $696 |
| 1540-0104 | Map box suspended with drop-down doors 15" H x 37.5" W x 14" D with center divider. | $588 |
| 1540-0109 | Map box rectangular rear facing on rear engine cover. The compartment shall be flush with the rear edge of the engine cover. Size: 14D X 30T X 36W. Includes: full height vertical divider 18 inches from driver side one (1) adjustable shelf on the officer side of divider & a web cargo net with 2 inch square openings across the entire rear opening secured with small buckles on all sides. Construction is smooth aluminum with a match cab interior finish. | $1,214 |
| 1550-0001 | Map pockets cab front doors diamond plate | $192 |
| 1550-0002 | Map pockets cab front doors stainless steel. | $157 |
| 1550-0007 | All cab exterior access doors to have CH751 keyed locks. | $189 |
| 1550-0008 | Fixed rear cab wall windows (pr). Not available with side mount pump module applications. | $124 |
| 1550-0009 | Fixed rear cab wall narrow windows (pr). | $121 |
| 1550-0010 | Sliding rear cab wall windows (pr). Windows are drop style and not available with side mount pump module applications. | $276 |
| 1550-0013 | Driver and Officer door windows. Includes electric roll-down actuation. Each door to have individual control at door position and the driver door is to have master control for all power window locations. | $1,562 |
| 1550-0014 | Rear crew cab door windows. Includes electric roll-down actuation. Each door to have individual control. Not available with paddle style door latching. | $1,562 |
| 1550-0015 | Stainless steel protective trim on rear edge of cab door openings. E-ONE custom chassis only. | $239 |
| 1550-0017 | Cab door panels stainless steel. | $1,394 |
| 1550-0018 | Scuff plates stainless steel (Set). Not available with paddle latches. | $111 |
| 1550-0019 | Windows cab side sliding driver side. | $281 |
| 1550-0022 | Cab roof vent with fan (pair). Each vent switched next to vent. Location: (1) each side centered above rear cab doors. | $853 |
| 1550-0023 | Windows rear sliding vista. Requires raised roof option | $464 |

| Item No. | Description | |
|---|---|---|
| 1550-0024 | All cab doors shall have exterior paddle latches. | $651 |
| 1550-0029 | Map pockets cab rear doors diamond plate | $164 |
| 1550-0030 | Map pockets cab rear doors stainless steel. | $200 |
| 1550-0032 | Windows cab side sliding officer side. | $281 |
| 1550-0037 | (4) Incandescent cab step area lighting. Locate each light in [#LOC]. Lights to be switched with door ajar. | $164 |
| 1550-0038 | (4) LED cab step area lighting. Locate each light [#LOC]. Lights to be switched with door ajar. | $647 |
| 1550-0039 | Door mounted red incandescent flashing lights (4). Locate lights [#LOC]. Lights to be switched with door ajar. | $164 |
| 1550-0040 | Door mounted red LED flashing lights (4). Locate lights [#LOC]. Lights to be switched with door ajar. | $389 |
| 1550-0041 | Door mounted amber incandescent flashing lights (4). Locate lights [#LOC]. Lights to be switched with door ajar. | $164 |
| 1550-0042 | Door mounted amber LED flashing lights. Locate lights [#LOC]. Lights to be switched with door ajar. | $389 |
| 1550-0043 | All cab door kick plates to be made from smooth plate aluminum with DA finish. | $319 |
| 1550-0045 | All cab door kick plates to be made from stainless steel plate. | $667 |
| 1550-0046 | Canadian flag reflective material in place of striping for interior cab doors. | $96 |
| 1550-0047 | All (4) cab doors to have double strap. Straps to be sewn together. | $156 |
| 1550-0050 | All cab exterior cab locks to be keyed for #CH751 locks. Orange County. | $279 |
| 1550-0053 | Aluminum interior rear cab door handrails (PR) IPOS. | $348 |
| 1550-0054 | All cab exterior access doors to have 1250 keyed locks. | $604 |
| 1550-0055 | Door mounted Whelen 500 series red TIR6 LED flashing lights (4) w/clear lenses. Locate lights [#LOC]. Lights to be switched with door ajar. | $1,299 |
| 1550-0061 | Rear crew cab door window. Includes electric roll-down actuation. Not available with paddle style door latching. For use with 3 door cab only. | $784 |
| 1550-0063 | (3) LED cab step area lighting. Locate each light in [#LOC]. Lights to be switched with door ajar. | $486 |
| 1550-0066 | Cab door kickplates fastened with screws. | $248 |
| 1550-0067 | [#COL] chevron "V" stripe on lower cab door panel approx 18" high. Stainless steel door panels only. CIIX and TyphoonX only. | $308 |
| 1550-0068 | Chrome grab handles on front cab doors (additional) (PR). Locate (1) each side below windows towards rear of doors. | $116 |
| 1550-0069 | Reflective [#COL] 3M Diamond Grade striping positioned in the "A" formation located on the cab door panels. | $313 |
| 1550-0070 | All (4) cab doors to have double door straps. Straps to be long enough to allow the door to open to a max of 90 degrees. | $309 |
| 1550-0071 | ABS cab door panels and lower kick panels to be fastened with screws. No drive rivets. | $412 |
| 1550-0072 | Cab door panels aluminum painted Zolatone gray. | $1,394 |
| 1550-0073 | [#COL] chevron "A" printed stripe on lower cab door panel approx 18" high. Stainless steel/painted door panels only. CIIX and TyphoonX only. | $308 |
| 1550-0074 | [#COL] chevron "A" stripe on entire lower cab door kick plate. Stainless steel or smooth plate kick plates only. CIIX and TyphoonX only. | $308 |
| 1550-0075 | Door mounted red LED flashing lights (3). Locate lights [#LOC]. Lights to be switched with door ajar. | $293 |
| 1550-0078 | Map pockets 14 gauge stainless steel. Includes vinyl trim around top of opening and nylon strap with snap to retain contents. Location: front cab doors. | $422 |
| 1550-0080 | [#COL] chevron "A" printed stripe on lower cab door panel approx 12" high. Stainless steel door panels only. CIIX and TyphoonX only. | $308 |
| 1550-0081 | Cab door locks - electric. Includes driver side exterior touchpad (2) remote key fobs barrel style key lock on exterior of each door and manual interior lock on each door. | $1,240 |
| 1550-0085 | All cab exterior access doors to have J236 keyed locks. | $604 |
| 1550-0086 | Door mounted red LED flashing lights (2). Locate lights [#LOC]. Lights to be switched with door ajar. | $196 |
| 1550-0087 | [#COL] Diamond Grade chevron "A" stripe on lower cab door panel approx 12" high. Stainless steel/painted door panels only. TyphoonX CIIX and QST2 only. | $511 |
| 1550-0088 | [#COL] chevron 2" "A" stripe on lower cab door panel approx 12" high. Stainless steel door panels only. CIIX and TyphoonX only. | $308 |
| 1550-0096 | Door mounted Whelen amber M6AC LED flashing lights (4) w/clear lenses. Lights to alternate flash top and bottom on each light. Locate lights [#LOC]. Lights to be switched with door ajar. | $1,393 |

| Item No. | Description | |
|---|---|---|
| 1550-0099 | Scuff plates stainless steel (Set). Approx. 7"x7" to encompass door handle and lock. Not available with paddle latches. | $240 |
| 1550-0100 | Polished stainless steel protective trim on rear edge of cab door openings. E-ONE custom chassis only. | $265 |
| 1550-0101 | Polished stainless steel scuff plates for exterior cab door handles (set). Not available with paddle latches. | $115 |
| 1550-0102 | Rear crew cab door windows with rear fixed panel. Includes electric roll-down actuation. Each door to have individual controls. For use with paddle style door latching. | $1,752 |
| 1550-0103 | Rear crew cab door windows with rear fixed panel. Includes manual roll-down actuation. For use with paddle style door latching. | $189 |
| 1550-0106 | [#COL] chevron "A" stripe on lower cab door panel approx 24" high. Stainless steel door panels only. CIIX and TyphoonX only. | $308 |
| 1550-0107 | [#COL] chevron "A" stripe on lower cab door panel approx 6" high. Stainless steel door panels only. CIIX and TyphoonX only. | $220 |
| 1550-0108 | Stainless steel protective trim on rear edge of rear cab door openings. E-ONE custom chassis only. | $120 |
| 1550-0109 | [#COL] Diamond Grade chevron "A" stripe on lower cab door panel approx 18" high. Stainless steel/painted door panels only. TyphoonX CIIX and QST2 only. | $511 |
| 1550-0114 | Map pockets cab front doors aluminum plate painted Zolatone gray. | $180 |
| 1550-0115 | Map pockets cab rear doors aluminum plate painted Zolatone gray. | $180 |
| 1550-0116 | Cab door locks - electric; 2DR cab only. Includes driver side exterior touchpad (2) remote key fobs barrel style key lock on exterior of each door and manual interior lock on each door. | $959 |
| 1550-0117 | Scuff plates stainless steel (PR) door lock. For use with paddle latches. | $58 |
| 1550-0120 | Door panels cab alum painted Zolatone black. | $1,394 |
| 1550-0121 | Cab door strap one (1) additional to standard straps shall be provided. Location: One (1) each cab door. | $151 |
| 1550-0125 | Chrome grab handles on front of cab (additional) (PR). Locate (1) each side below winshields outboard of wiper pivot points. | $116 |
| 1550-0127 | Door mounted Whelen M4RC LED flashing lights (4) w/clear lenses. Locate lights [#LOC]. Lights to be switched with door ajar. | $1,278 |
| 1550-0128 | (4) Whelen LED cab step area lighting. Locate each light [#LOC]. Lights to be switched with door ajar. | $839 |
| 1550-0129 | Enclosures for electric door window actuation switch(s) shall be stream lined (1) switch behind another (not side by side) mounted in an enclosure to match the door's interior IPOS. Each door to be individually controlled. The driver shall have control for all electrically actuated windows. | $246 |
| 1550-0130 | Stainless steel protective trim on rear edge of rear ALS cab door openings. E-ONE custom chassis only. | $120 |
| 1550-0131 | Removable access panel on each cab door to the regulator and latch. | $526 |
| 1550-0132 | Driver and Officer door windows. Includes electric roll-down actuation. Each window to be individually controlled at each door. Each window switch will be flush mounted as far forward on the door as possible with minimal or no switch mounting protrusion. The driver side will NOT have controls for all electrically actuated windows but rather a single switch for the driver door window only. | $1,780 |
| 1550-0134 | Polished stainless steel trim on bottom edge of the over wheel cab compartment opening (ea). | $37 |
| 1550-0135 | Stainless steel trim on the vertical edge of the over wheel cab compartment opening (ea). | $51 |
| 1550-0136 | Polished stainless steel trim on the vertical edge of the over wheel cab compartment opening (ea). | $67 |
| 1550-0137 | A removable access panel shall be incorporated into the interior cover panel(s) of each cab door to permit easy access to the latch mechanism. | $526 |
| 1550-0138 | Door mounted Whelen M2 red super LED flashing lights (4). Locate lights on each cab door in the outboard position. Each individual light shall be activated by the corresponding cab door ajar circuit. | $1,142 |
| 1550-0139 | Each cab door shall have stainless steel trim on the trailing edge of the door to include forward door wheel well (radius) area. E-ONE custom chassis only. | $411 |
| 1550-0140 | Reflective [#COL] 3M Diamond Grade striping positioned in the "A" formation located in the lower cab door panels extending approximately 14" from the door's bottom. | $365 |
| 1550-0141 | Polished stainless steel protective trim to wrap cab door jambs on all (4) entry doors. Trim to extend 3" past closed door edge (as applicable). E-One custom chassis only. | $1,175 |
| 1550-0144 | Reflective [#COL] individual striping positioned in the "A" formation located on the cab door panels. | $227 |

| Item No. | Description | |
|---|---|---|
| 1550-0145 | [#COL] chevron "A" individual stripes on lower cab door panel approx 18" high. Stainless steel/painted door panels only. CIIX and TyphoonX only. | $382 |
| 1550-0146 | [#COL] chevron "A" individual stripe on lower cab door panel approx 12" high. Stainless steel/painted door panels only. CIIX and TyphoonX only. | $343 |
| 1550-0147 | Location - Front door map pockets shall be located approximately 17" below window. | $108 |
| 1550-0148 | Reflective [#COL] 3M Diamond Grade striping positioned in the "A" formation located in the lower cab door panels extending approximately 12" from the door's bottom. | $345 |
| 1550-0150 | Rear crew cab door windows with rear fixed panel. Includes electric roll-down actuation. Each door to be individually controlled. Each window switch will be flush mounted below rearward fixed window area with minimal or no switch mounting protrusion. For use with paddle style door latching. | $1,780 |
| 1550-0151 | The map boxes attached to cab doors shall include press on black trim. The trim shall be applied along the edge of map box opening. | $82 |
| 1550-0154 | Chrome edge guard on rear vertical edges of cab doors. | $81 |
| 1550-0155 | Rear crew cab door window with rear fixed panel. Includes electric roll-down actuation. Door to be individually controlled. For use with paddle style door latching. | $877 |
| 1550-0156 | Cab door locks - electric. Includes driver side exterior touchpad (2) remote key fobs barrel style key lock and manual interior lock on each door. | $1,240 |
| 1550-0160 | Cab door locks - electric. Includes (2) remote key fobs barrel style key lock on exterior of each door and manual interior lock on each door. | $756 |
| 1550-0161 | Warning light Whelen 500 Super LED (4) red model 50R03ZCR lights with clear lenses. Flashing lights wired through each individual door. Location: One on each of the interior cab doors (outboard position). | $1,221 |
| 1550-0162 | Door mounted Whelen 500 series amber TIR6 LED flashing lights (2) w/clear lenses. Locate lights on each cab door in the outboard position. Lights to be switched with door ajar. | $650 |
| 1550-0163 | Map pockets cab rear doors aluminum plate painted Zolatone black. | $180 |
| 1550-0166 | Stainless steel protective trim on rear edge of cab door openings. Includes front cab door lower angle areas. E-ONE custom chassis only. | $290 |
| 1550-0167 | Reflective Blue 3M Scotchlite and Fluorescent Yellow Green 3M Diamond Grade striping positioned in the "A" formation located in the lower cab door panels. | $313 |
| 1550-0169 | Cab door panels aluminum painted to match cab interior. (QST2 only) | $1,370 |
| 1550-0171 | (4) TecNiq LED cab step area lighting. Locate each light [#LOC]. Lights to be switched with door ajar. | $222 |
| 1550-0173 | Stainless steel trim on bottom edge of the over wheel cab compartment opening (ea). Vertical trim edge to be 3" tall. | $128 |
| 1550-0174 | Reflective [#COL] 3M Diamond Grade striping positioned in the "A" formation located in the entire SS cab door panels below the windows. | $959 |
| 1550-0175 | Door mounted Whelen model 0SA00MCR LED flashing lights. Locate lights [#LOC]. Lights to be switched with door ajar. | $297 |
| 1550-0176 | Door mounted Whelen 3SR00FRR red super LED flashing lights (4). Locate lights [#LOC]. Each individual light shall be activated by the corresponding cab door ajar circuit. | $739 |
| 1550-0177 | [#COL] Reflexite V98 striping positioned in the "A" formation located on the cab door panels. | $252 |
| 1550-0178 | [#COL] Reflexite V98 chevron "A" stripe on lower cab door panel approx 12" high. Stainless steel/painted door panels only. TyphoonX CIIX and QST2 only. | $348 |
| 1550-0179 | [#COL] Reflexite V98 chevron "A" stripe on lower cab door panel approx 18" high. Stainless steel/painted door panels only. TyphoonX CIIX and QST2 only. | $386 |
| 1550-0180 | Cab door panels stainless steel. Includes upper and lower panels with seam below handrail. | $1,599 |
| 1550-0181 | [#COL] chevron "A" printed stripe on lower cab door panel below map pockets to bottom of door. Stainless steel/Zolatone door panels only. | $308 |
| 1550-0182 | Door mounted Federal Signal amber MPS600-AA LED flashing lights (4) w/clear lenses. Locate lights [#LOC] . Lights to be switched with door ajar. | $923 |
| 1550-0183 | Recess in upper rear cab doors in lieu of windows (PR). (1) each side approx. 10L x 5W x 3D for latex glove box. Includes (2) velcro straps for each recess to be mounted at final inspection. | $593 |
| 1550-0184 | Map pockets cab front doors aluminum plate painted Zolatone black. | $180 |
| 1550-0185 | Cab door panels aluminum painted Zolatone gray. Includes upper and lower panels with seam below handrail. | $1,599 |
| 1550-0186 | (4) TecNiq T440 4" LED cab step area lighting. Locate each light [#LOC]. Lights to be switched with door ajar. | $222 |
| 1550-0188 | LINE-X Door Panels: The inner cab door panels shall be made out of aluminum plate coated with LINE-X for increased durability. | $1,827 |

| Item No. | Description | |
|---|---|---|
| 1550-0189 | Map pocket officer cab front door aluminum plate painted Zolatone gray. | $90 |
| 1550-0190 | Warning light Whelen 500 Super LED (4) split red/amber model 50RA3ZCR lights. Flashing lights wired through each individual door. Location: One on each of the interior cab doors (outboard position). | $1,221 |
| 1550-0192 | Additional remote key fob (PR). | $84 |
| 1550-0193 | [#COL] Reflexite V98 striping positioned in the "A" formation located in the entire SS cab door panels below the windows. | $772 |
| 1550-0194 | Cab door window trim mechanically fastened in place of standard. | $62 |
| 1550-0196 | (2) TecNiq T440 4" LED cab step area lighting. Locate each light [#LOC]. Lights to be switched with door ajar. | $111 |
| 1550-0197 | Map pockets on the cab front doors shall be aluminum plate painted LINE-X. The LINE-X color to match the interior of the cab. | $358 |
| 1550-0199 | Warning light Whelen 500 Super LED (4) amber model 5VA02ZAR vertical lights with 5FLANGEP mount. Flashing lights wired through each individual door. Location: One on each of the interior cab doors (outboard position) mounted vertically. | $1,416 |
| 1550-0200 | (4) Whelen 3" LED cab step area lighting. Locate each light [#LOC]. Lights to be switched with door ajar. | $618 |
| 1550-0201 | Door mounted Whelen ION amber LED flashing lights. Locate lights [#LOC]. Lights to be switched with door ajar. | $1,308 |
| 1550-0202 | Relocate driver master power window controls to driver lower cab dash adjacent to steering column. | $416 |
| 1550-0203 | Map pockets cab front doors stainless steel 1.5" deep. | $157 |
| 1550-0204 | Locate rear cab door ajar switches high on door hinges. | $102 |
| 1550-0205 | Polished stainless steel protective trim on rear edge of cab door openings. Includes front cab door lower angle areas. E-ONE custom chassis only. | $290 |
| 1550-0206 | Cab door panels aluminum painted Zolatone "Dark Red" 20-78. | $1,394 |
| 1550-0207 | Cab door locks - electric. Includes driver and officer side exterior touchpads (2) remote key fobs barrel style key lock and manual interior lock on each door. | $1,423 |
| 1550-0208 | Relocate driver master power window controls to center cab dash. | $416 |
| 1550-0209 | Door mounted Whelen ION red LED flashing lights. Locate lights [#LOC]. Lights to be switched with door ajar. | $1,308 |
| 1550-0210 | Door mounted Power Arc model PP2-RC red LED flashing lights (4) w/clear lenses. Locate lights [#LOC]. Lights to be switched with door ajar. | $852 |
| 1615-0001 | Vista full height rear doors 12". | $3,719 |
| 1615-0002 | Vista full height rear doors 16". | $3,894 |
| 1615-0003 | Vista full height rear doors 20". | $4,068 |
| 1615-0015 | Diamond plate overlay (integral as applicable) front of vista slope. | $491 |
| 1615-0016 | Cab roof to have a 4.5" deep x 44" wide trough for lowered aerial. | $585 |
| 1615-0019 | Vista full height rear doors 20". Includes 4" cap for a 24" total raised roof. | $5,523 |
| 1615-0020 | Side vista roof windows behind rear doors. 80" cab with medium doors only. | $124 |
| 1615-0021 | Split raised rear cab roof. 12" high for use with rear mount aerial. | $5,772 |
| 1615-0022 | Cab roof to have 12" high split raised rear section with full length center waterway trough. For use with rear mount aerial. | $5,772 |
| 1615-0023 | Cab roof to have 12" high split raised rear section with full length center waterway trough. Inboard vertical surfaces tapered outward for use with HP100 Platform. | $5,772 |
| 1615-0025 | Cab roof to have a 4.5" deep x 44" wide trough with 1.5" deep side notches for lowered HP100 Platform. | $727 |
| 1615-0027 | Cab roof to have 12" high split raised rear section and a 4.5" deep x 44" wide trough for rear mount lowered aerial. | $6,354 |
| 1615-0030 | Cab roof to be smooth plate painted job color in lieu of standard diamond plate construction. | $924 |
| 1620-0000 | Overlay the painted grille with stainless steel | $350 |
| 1620-0002 | Stainless steel grille for Typhoon X. | $923 |
| 1620-0003 | Stainless steel grille for Typhoon | $923 |
| 1620-0006 | CIIX stainless steel grille for Typhoon X. | $923 |
| 1620-0012 | Grill lettering - special. Black powder coated S/S. (QST2 only)(See shop order file for desired name) | $379 |
| 1640-0000 | Step below cab door. Located [#LOC]. Steps under front cab doors shall not interfere with approach angle. | $238 |
| 1640-0016 | Step below cab door; stirrup style without back wall. Located [#LOC]. Steps under Front Cab doors shall not interfere with Approach Angle. | $238 |

| Item No. | Description | |
|---|---|---|
| 1640-0018 | Step below cab door; smooth plate painted black durabak. Located [#LOC]. Steps under front cab doors shall not interfere with approach angle. | $313 |
| 1640-0026 | Removable bottom panel on cab steps. | $225 |
| 1640-0028 | Step below cab door Zico VS-20-5 elect swing out/down. Step to extend when door is opened and retract when closed. Steps shall be flush with outter edge of cab when stowed. Location: Each cab door | $1,584 |
| 1640-0029 | Each cab step well's kick plates and steps shall be aluminum smooth plate IPO diamond plate and all surfaces painted black durabak up to and below cab floor level. | $624 |
| 1640-0030 | Each cab step well's kick plates and steps shall be aluminum smooth plate IPO diamond plate and all surfaces painted Gray Zolatone up to and below cab floor level. All step surfaces provided with a multi-directional aggressive gripping surface (Gator Grip) incorporated into the aluminum smooth plate. | $624 |
| 1640-0031 | Each cab step well's kick plates and steps shall be aluminum smooth plate IPO diamond plate and all surfaces painted Black Scorpion (rough finish) up to and below cab floor level. All step surfaces provided with a multi-directional aggressive gripping surface (Gator Grip) incorporated into the aluminum smooth plate. | $624 |
| 1640-0032 | Step below cab door Zico VS-20-5 elect swing out/down. Step to extend when door is opened and retract when closed. Steps shall be flush with outter edge of cab when stowed. Location: Front cab doors. | $1,584 |
| 1640-0035 | Each cab step well's kick plates and steps shall be aluminum diamond plate without a multi-directional aggressive gripping surface (Gator Grip). Includes embossed diamond plate bolt-on panels at each lower step area. | $624 |
| 1640-0036 | LINE-X package for custom cab steps: Includes cab step wells (everything below the cab floor) and all welded and bolt on steps including stirrup and swing out steps as applicable. Steps hanging below the cab shall have LINE-X coating inside and outside. DEF tank door or any other access doors are also included in this package if located in the step well area below the cab floor. | $942 |
| 1640-0038 | Intermediate front cab door step (PR). | $457 |
| 1640-0041 | LINE-X package for custom cab steps (NO DOORS): Includes cab step wells (everything below the cab floor) and all welded and bolt on steps including stirrup and swing out steps as applicable. Steps hanging below the cab shall have LINE-X coating inside and outside. DEF tank door or any other access door located in the step well area below the cab floor SHALL NOT have LINE-X finish. | $840 |
| 1640-0043 | Upgrade the cab bolt-on steps to include cutouts with Grip Strut inserts IPO Gator Grip. | $541 |
| 1640-0045 | Step below cab door. Open back style with angled corners. Located [#LOC]. Steps under front cab doors shall not interfere with approach angle. | $238 |
| 1640-0049 | Step below cab door to be hinged. Located [#LOC]. Steps under front cab doors shall not interfere with approach angle. | $238 |
| 1670-0001 | Ramco 6001FFR mirrors. Remote controlled with top CAS750 convex. Location: [#LOC]. | $1,584 |
| 1670-0002 | Ramco 6001MCR mirrors. Remote controlled with bottom convex. Location: [#LOC]. | $1,258 |
| 1670-0003 | Velvac 2010 mirrors. Door mounted west coast style with remote control and heat. | $676 |
| 1670-0006 | 1.5" Extension for Ramco Mirrors (OBSOLETE FROM MANUFACTURER) | $164 |
| 1670-0007 | 3" Extension for Ramco Mirrors | $164 |
| 1670-0008 | 4.5" Extension for Ramco Mirrors. | $164 |
| 1670-0010 | Retrac West Coast mirrors mounted on cab doors. | $311 |
| 1670-0011 | Cab mirrors for tiller cab. Includes one inside at front center overhead and one each side exterior mounted. | $301 |
| 1670-0013 | Both cab mirrors to be heated. | $308 |
| 1670-0015 | Velvac 2010 mirrors with marker lights. Door mounted west coast style with remote control and heat. | $711 |
| 1670-0017 | Mirror Stainless Steel 8" Convex above officer side cab brow Bell Type Mounting 2 Piece Adjustable Telescoping Arm. Head #983 Arm #3983 | $93 |
| 1670-0018 | Velvac mirrors model 2025 with LED directional arrows. Door mounted (bottom mount) with remote control and heat. | $1,161 |
| 1670-0019 | Ramco 6001CCR-750 mirrors. Remote controlled with bottom convex and top CAS750 convex. Location: [#LOC]. | $1,686 |
| 1670-0021 | Ramco 6001FFR mirrors. Remote controlled with CAS750R top remote convex. Location: [#LOC] | $1,830 |
| 1670-0023 | Mirror Stainless Steel 8" Convex above driver side cab brow Bell Type Mounting 2 Piece Adjustable Telescoping Arm. Head #983 Arm #3983 | $93 |
| 1670-0030 | Kenworth model MX148S wide angle mirror. Location: [#LOC]. | $186 |
| 1670-0031 | 2" extension for Ramco mirrors. | $164 |

| Item No. | Description | |
|---|---|---|
| 1670-0032 | Ramco 6001FFR mirrors. Remote controlled with top CAS750 convex and LED turn signals. Location: [#LOC]. | $2,115 |
| 1670-0035 | Ramco 6001FFR mirrors with INVUE camera. Remote controlled with top CAS750 convex. Location: [#LOC]. | $2,793 |
| 1670-0036 | Ramco 6001MCR mirrors with INVUE camera. Remote controlled with bottom convex. Location: [#LOC] | $2,793 |
| 1670-0038 | Lang Mekra mirrors w/LED marker lights and turn signals. Door mounted west coast style with convex remote control and heat. | $1,368 |
| 1670-0039 | Moto mirrors model 340530. Door mounted with driver heat; officer remote control and heat. | $1,136 |
| 1670-0044 | Ramco 6001FFR mirrors with INVUE camera and LED turn signals. Heated/remote controlled flat glass with heated/remoted controlled top CAS750 convex. Location: [#LOC]. | $2,716 |
| 1670-0045 | Mirror stainless steel 10.5" convex mounted on tubular SS adjustable bracket. Locate officer side frt cab corner. Lower mount of main support arm to be approx even with center of quads (approx 5" outboard of quads) with arm extending upward. Short diagonal support arms to attach to frt of cab just above cab contour. Ref photo of Ville De Quebec HP100. | $352 |
| 1670-0046 | Ramco 6001MCR mirrors. Remote controlled with bottom convex and LED turn signals. Location: [#LOC]. | $1,561 |
| 1670-0048 | Retrac Aerodynamic remote heated mirrors (PR) mounted on cab doors. | $1,232 |
| 1670-0052 | Ramco 6000-PCHR mirrors. The mirrors shall incorporate heated and remote for both flat and convex using (2) Ramco model ELE-310 switches. Location: [#LOC]. | $1,833 |
| 1670-0053 | Moto mirrors model 7-2386. Door mounted with remote control and heat. | $958 |
| 1670-0054 | Velvac mirrors model 2030 chrome with LED directional arrows. Front corner mounted with remote control and heat. | $1,380 |
| 1670-0055 | Velvac convex mirrors (PR). Model Top Hat bolt-on convex mirror. For use with model 2025 or 2030 mirrors only. | $210 |
| 1670-0056 | Retrac west coast remote heated mirrors (PR) mounted on cab doors. | $1,310 |
| 1670-0059 | Retrac Mirror stainless steel 10" 3-arm convex above officer side cab brow 3 piece adjustable telescoping arm. Head #604953 Arm assy#604671 | $289 |
| 1670-0061 | Retrac west coast heated mirrors (PR) with convex lower mounted on cab doors. Includes green marker on officer and red marker on driver. | $922 |
| 1670-0062 | Retrac Aerodynamic dual vision chrome west coast style mirrors (PR) mounted on cab doors. Includes remote control and heat for std and convex mirrors and LED marker light. | $1,607 |
| 1670-0063 | Velvac mirrors model 2025 with LED directional arrows. Door mounted (bottom mount) with remote control and heat full bottom glass and heated top hat convex. No lower convex. | $1,227 |
| 1670-0064 | Retrac west coast remote heated mirrors with lights (PR) mounted on cab doors. | $1,310 |
| 1670-0065 | Retrac Mirror stainless steel 10" 3-arm convex above driver side cab brow 3 piece adjustable telescoping arm. Head #604953 Arm assy#604671 | $289 |
| 1670-0066 | Ramco 6001FFR black mirrors. Remote controlled with black top CAS750 convex. Location: [#LOC]. | $1,840 |
| 1670-0067 | Ramco model CRM-1752-3HRT-853 mirrors. The mirrors shall incorporate heated and remote for both flat and convex using (3) Ramco model ELE-310 switches. Location: [#LOC]. | $2,202 |
| 1670-0068 | Lang Mekra mirrors w/LED marker lights and turn signals. Black door mounted west coast style with convex remote control and heat. | $1,368 |
| 1670-0070 | Velvac mirrors model 2030 chrome with full face lower upper bolt-on convex and LED marker lights. Front corner mounted with remote control lower and dual heat. | $1,788 |
| 1670-0071 | Lang Mekra mirrors (No marker/turn). Door mounted west coast style with convex remote control and heat. | $1,368 |
| 1670-0072 | Ramco model CRM-310-1350CCHR mirrors. The mirrors shall incorporate heat and remote using Ramco model ELE-310 switch. Location: [#LOC]. | $2,202 |
| 1670-0073 | Driver side Velvac 2010 door mounted west coast mirror with remote and heat. Officer side Ramco 6001FFR front corner mounted remote controlled with top CAS750 convex and heat. | $1,275 |
| 1670-0074 | Velvac V-Max mirrors black with lower convex and LED marker lights. Door mounted (bottom mount)driver front cab corner officer with remote control and heat. | $1,241 |
| 1675-0001 | Stainless steel trim belt on front of cab. Location: [#LOC]. | $488 |
| 1675-0005 | Cab roof vent with-out fan (pair). Location: (1) each side centered above rear cab doors. | $381 |
| 1675-0006 | Vent w/fan roof mounted pair. | $853 |
| 1675-0014 | SCBA bottle storage two driver side of cab behind rear door with cast doors. | $753 |
| 1675-0015 | Cab roof mounted diamond plate 3 sided light tower shield with 45 degree front slope. | $968 |
| 1675-0016 | Cab roof mounted painted job color 3 sided light tower shield with 45 degree front slope. | $1,205 |
| 1675-0020 | Auto eject stainless steel scuff plate. | $96 |
| 1675-0022 | Pair of 18" handrails located just behind driver and officer front door one each side. | $379 |

| Item No. | Description | |
|---|---|---|
| 1675-0023 | Pair of 18" handrails located just behind driver and officer rear door (ALS doors if equipped) one each side. | $379 |
| 1675-0024 | Pair of 36" handrails located just behind driver and officer rear door (ALS doors if equipped) one each side. | $412 |
| 1675-0025 | SCBA bottle storage two officer side of cab behind rear door with cast doors. | $753 |
| 1675-0030 | Mud flaps front black with E-ONE logo. | $159 |
| 1675-0033 | Chrome fire bell with eagle. Location: Officer's side of front bumper extension. | $1,414 |
| 1675-0034 | Cab driprail drain holes. The driprail just before the vista roof begins to have a drain hole provided (one each side of cab). | $89 |
| 1675-0035 | Belt size tag. Install next to fluid capacity tag. Tag to provide belt sizes for all belts provided. | $108 |
| 1675-0036 | Cab wheel well liners. The cab wheel well liners to be aluminum IPO ABS plastic. Paint job color. | $612 |
| 1675-0038 | Sign plate smooth 30" x 30" mounted on cab roof (vista if equipped). Color: [#COL]. | $244 |
| 1675-0039 | Pair of 48" handrails located just behind driver and officer rear door (ALS doors if equipped) one each side. | $474 |
| 1675-0041 | Stainless steel trim belt low on sides of cab. | $1,447 |
| 1675-0042 | Rear cab wall to be smooth 3/16" aluminum plate. Cab wall to be finish painted to match the cab paint scheme. | $356 |
| 1675-0045 | Hansen white LED cab handrails upgrade (EA). | $200 |
| 1675-0048 | Rear cab wall to be smooth 3/16" aluminum plate with a diamond plate overlay. | $445 |
| 1675-0053 | Stainless steel scuff plates full height on rear cab corners (PR) | $246 |
| 1675-0054 | Sign plate smooth 18"x28" mounted one each side cab roof (vista if equipped). Color: [#COL] | $483 |
| 1675-0055 | Radio box 18W x 12H x 10D. Location: Centered up high of vista area recessed on the rear exterior cab wall with door hinged to the bottom. | $513 |
| 1675-0056 | Stainless steel scuff plates on rear cab roof corners (PR) | $186 |
| 1675-0057 | Mounting plate for battery charger receptacle and indicator - removable brushed stainless steel. | $291 |
| 1675-0058 | Chrome fire bell with gold eagle. Location: Officer's side of front bumper extension. | $1,490 |
| 1675-0059 | Rear cab wall to be smooth 3/16" aluminum plate with swirl plate overlay. | $732 |
| 1675-0060 | Sign plate smooth 40" x 80" mounted on cab roof (vista if equipped). Color: [#COL] | $700 |
| 1675-0061 | Cab roof mounted 4 sided light tower shield painted job color. | $1,567 |
| 1675-0062 | Electric chrome fire bell with eagle. Location: Driver's side of front bumper extension. Includes switch on officer side overhead console. | $1,978 |
| 1675-0063 | Mud flaps front black without logo. | $163 |
| 1675-0067 | Cab roof mounted 3 sided light tower shield painted two-tone job color. | $1,205 |
| 1675-0071 | Remove side grille from wheel well areas of the cab. TyphoonX cab only. | $241 |
| 1675-0072 | (4) roof mounted (welded) sign plate mounting points. Mounts to space roof sign plate off cab roof and allow for easy removal. | $282 |
| 1675-0073 | Hose deflector pin to protect Q2B on front bumper extension. | $212 |
| 1675-0074 | Cab roof mounted 3 sided light tower shield with welded sides and painted job color with 45 degree front slope. | $1,425 |
| 1675-0075 | Cab roof mounted painted job color 3 sided light tower shield with 90 degree front slope. | $1,205 |
| 1675-0076 | Cab roof mounted diamond plate 3 sided light tower shield with 90 degree front slope. | $968 |
| 1675-0077 | Storage box on rear cab roof 48W x 48L x 12H with 4-sided lid painted two-tone job color (if applicable) | $1,967 |
| 1675-0078 | Hansen red LED cab handrails upgrade (EA). | $200 |
| 1675-0079 | Diamond plate storage box for Little Giant model 17 on rear cab vista roof. Includes drop down door with push button latches and nylatron on floor. | $1,439 |
| 1675-0086 | Raised cab wheel wells for low OAH applications. | $444 |
| 1675-0087 | Pair of handrails (8" driver and 18" officer) located just behind driver and officer front door. | $489 |
| 1675-0088 | Fluid capacity tag to include filter model numbers for engine oil transmission fuel air hydraulic and coolant. Tire size front and rear to be included on tag. | $108 |
| 1675-0089 | Radio box 18W x 12H x 10D. Location: Up high center rear wall panel offset to driver side of vista area recessed on the rear exterior cab wall with door hinged to the bottom. Includes rubber bumpers on upper corners of door. | $513 |
| 1675-0090 | Light tower riser ahead of vista. For use with large towers. Installed tower to not exceed over all height of vista roof. | $1,756 |
| 1675-0093 | Grille on side of cab over wheel (PR). Grilles are non-venting and for cosmetic purposes only. Includes black-out surface behind grilles. | $250 |
| 1675-0094 | Microphone/Speaker box. 11"H x 9"W x 6.5"D Location: Centered up high recessed on the rear vista exterior cab wall with vertically hinged door. | $513 |

| Item No. | Description | |
|---|---|---|
| 1675-0095 | Diamond plate storage box on rear cab roof 80W x 36D x 14H with lid. | $1,740 |
| 1675-0098 | Rear cab door handrail package. Includes exterior mounted 18" extruded aluminum handrail driver side located just behind rear door and interior mouned rubber covered grab handle officer side at rear of opening. | $300 |
| 1675-0099 | SCBA bottle storage (4) officer side of cab behind rear door with cast door. Upper storage compt will be spaced up above lower three due to rear wall support. N/A with exterior cab handrail (requires inside grab rail). | $1,503 |
| 1675-0110 | Cab exterior hand rails to use Austin Hardware model GR-002-AL-BRT-144 knurled bright anodized aluminum tubes IPOS. | $127 |
| 1675-0116 | Brushed stainless steel scuff plates for cab handrails (PR). | $209 |
| 1675-0118 | Fluid capacity tag to include lug nut torque specs for front and rear wheels in addition to required information. | $108 |
| 1675-0123 | Chrome fire bell laser etching. Requires design provided in digital format. One side only. | $633 |
| 1675-0124 | Additional fluid capacity tag in French. | $108 |
| 1675-0125 | Mounting plate for battery charge receptacle indicator and air auto eject receptacle - removable brushed stainless steel. | $291 |
| 1675-0126 | Diamond plate storage box on rear cab roof 70W x 40D x 8.5H with lid. | $1,740 |
| 1675-0130 | Mounting plate for battery charge receptacle indicator air auto eject receptacle and block heater receptacle - removable brushed stainless steel. | $291 |
| 1675-0132 | Customer supplied fire bell for dealer installation. Includes: bracing under extended front bumper extension bulk head fiting and pull cable. Location: Officer's side of front bumper extension. | $437 |
| 1675-0133 | Rear cab and vista glass (if so equipped) to be dark tint (smoked glass with approx 50% light transmittance) IPOS. Includes all glass rearward of front cab doors. | $575 |
| 1675-0134 | Cab wheel well liners. The cab wheel well liners to be aluminum with sanded finish IPO ABS plastic. | $499 |
| 1675-0135 | Sign plate smooth with sanded finish 20" x 20" mounted on cab roof forward of vista. | $244 |
| 1675-0136 | Radio box 18W x 14H x 12D. Location: Up high center rear wall panel of vista area recessed on the rear exterior cab wall with door hinged to the bottom. Includes rubber bumpers on upper corners of door. | $513 |
| 1675-0138 | Cab roof mounted 3 sided roof mounted AC shield with 45 degree front slope painted two-tone job color. | $988 |
| 1675-0140 | Cab roof mounted diamond plate 3 sided AC shield with 45 degree front slope. | $752 |
| 1675-0144 | Pair of 24" handrails located just behind driver and officer front door one each side. | $397 |
| 1675-0145 | Diamond plate cover to protect the air conditioner lines on the cab roof. | $227 |
| 1675-0146 | Polished stainless steel scuff plates full height on rear cab corners (PR). | $446 |
| 1675-0147 | Electric chrome fire bell with eagle. Location: Driver's side of front bumper extension. Includes switch on officer side dash. | $1,978 |
| 1675-0149 | The battery charger receptacle mounting plate shall be fabricated using 3/16" aluminum smooth plate. It shall be painted to match cab two tone job colors and align with the paint break as mounted. | $143 |
| 1675-0151 | Pair of 24" handrails located in the interior of driver and officer rear doors. The handrails shall be mounted on the rear wall. If equipped with an ALS cabinet the handrails shall be mounted on the ALS interior surface outboard of the ALS access door within easy reach of rear door entry personnel. | $395 |
| 1675-0152 | Sign plate smooth 40" x 40" mounted on cab roof (vista if equipped). Color: [#COL]. | $324 |
| 1675-0153 | SCBA bottle storage two driver and officer side of cab behind rear door with 3/16" plate doors painted job color. | $1,503 |
| 1675-0158 | Backboard storage sleve for (1) board. Includes retaining strap for board. Loc: [#LOC]. | $707 |
| 1675-0159 | Mounting plate for battery charge receptacle indicator and block heater receptacle - removable brushed stainless steel. | $291 |
| 1675-0160 | Backboard storage compartment for (1) board. Includes (2) hinged doors (1) each side with (2) push button latches for each door. Loc: [#LOC]. | $861 |
| 1675-0161 | Escape hatch located on rear cab roof. | $1,271 |
| 1675-0162 | Cab roof vent with-out fan (pair). Location: (1) each side offset above driver and officer. | $381 |
| 1675-0163 | Storage box (additional) to house light tower controls/tether mounted on the rear of the cab roof offset to the driver side (exterior). The storage box shall be constructed of tread plate include a drop down door tied into the door ajar circuit and thumb latch(s). | $369 |
| 1675-0164 | Cab roof mounted painted job color 3 sided light tower shield with 45 degree front slope to match the height of the light tower in the bedded position (+1" -0"). | $1,313 |

| Item No. | Description | |
|---|---|---|
| 1675-0166 | Cab roof mounted painted job color 3 sided light tower shield with 45 degree front slope. Located rearward on flat roof (non vista). Placement to allow 45 degree shield to be placed in normal vista rise location to allow cab to appear to have vista roof. | $1,309 |
| 1675-0167 | Sign plate mounted to the full width front bumper center hose tray lid. Smooth plate painted FLNA4145 Black sized according to space available. | $180 |
| 1675-0168 | Sign plate smooth 30" x 45" mounted on cab roof (vista if equipped). Color: [#COL]. | $324 |
| 1675-0169 | Door single vertically hinged painted with Tri-Mark latch. Location(s): driver side canopy area of cab. | $942 |
| 1675-0170 | Embossed diamond plate in place of ALL standard and optioned diamond plate on cab. | $1,477 |
| 1675-0171 | Cab roof mounted 3 sided dual air condensor shield with 45 degree front slope. The shield shall be constructed using smooth aluminum plate. Finish: Painted to match upper cab. | $968 |
| 1675-0174 | Hansen green LED cab handrails upgrade (EA). | $200 |
| 1675-0178 | Awning rear of cab rearward facing. A wind deflector shall be mounted rearward on the cab roof full width as part of the pump module awning. On the back side of the wind deflector a vertical mounting plate shall be included. An awning mounting bracket shall be mounted to the wind deflector vertical plate. The awning mounting bracket shall include 6" of vertical adjustment to allow the awning to be manually raised up to 6" higher from its base position and include plate work to shield light when raised to the desired height. A 12V Marquee Over the Door/Window awning 72" long X 36" extension white in color shall be mounted in place on the adjustable bracket centered about the top mount pump panel. An awning deployment switch shall be included on the pump instrument panel. The awning deployment and adjustable height shall be included in the door ajar circuit. | $3,860 |
| 1675-0181 | (1) 48" handrail located just behind rear door (ALS doors if equipped). 3 door custom cabs only. | $239 |
| 1675-0182 | Mounting plate for battery charger receptacle and indicator - removable polished stainless steel. | $291 |
| 1675-0183 | Side fixed windows behind rear doors. Windows to be same height as canopy windows. 80" cab with medium doors only. | $324 |
| 1675-0184 | Chrome fire bell with eagle. Location: Officer's side front cab corner. | $1,521 |
| 1675-0185 | Two (2) pair of 30" handrails. One (1) pair located just behind driver and officer rear door (ALS doors if equipped) one each side for access of cab rear door each side. The other pair located behind rear doors and rearward of handrails one each side for access to top mount walkway each side. | $780 |
| 1675-0186 | Sign plate smooth 30" x 30" mounted on cab roof forward of vista. Color: [#COL]. | $244 |
| 1675-0187 | Pair of 24" handrails located just behind driver and officer rear door one each side. | $397 |
| 1675-0189 | Door single vertically hinged painted with Tri-Mark latch. Location(s): officer side canopy area of cab. | $942 |
| 1675-0191 | Sign plate smooth with painted finish 24" x 24" mounted on cab roof forward of vista. Color: [#COL]. | $244 |
| 1675-0192 | Rear cab wall to be smooth 3/16" aluminum plate painted black Durabak. Includes rear facing extrusions. | $732 |
| 1675-0193 | Polished stainless steel trim belt low on sides of cab. No black trim on upper and lower areas. | $1,710 |
| 1675-0195 | Body compartment interior painted black Durabak. Only for half height compartments. IIncludes Back Top Bottom (unless it is diamond plate) and Side Walls Compartment: [#LOC]. | $360 |
| 1675-0197 | Window cab side fixed officer's above medical cabinet. | $163 |
| 1675-0198 | Polished stainless steel trim belt low on sides of cab. | $1,710 |
| 1675-0200 | Hansen blue LED cab handrails upgrade (EA). | $200 |
| 1675-0204 | The cab roof shall be diamond plate painted black durabak. If equipped with trough overlay plate it shall be painted black durabak also. | $926 |
| 1675-0205 | Drip pan for a ROM roll-up door (EA). Location(s): driver and officer side ALS door. | $171 |
| 1675-0206 | Pair of 18" handrails located on ALS doors just behind driver and officer rear door. | $379 |
| 1675-0208 | Cab exterior hand rails to be Stainless steel knurled grip surface hand rails in place of standard anodized handrails. | $312 |
| 1675-0209 | Stainless steel full height wrap on rear cab corners (PR). Includes under handrails behind rear cab doors (if equipped). Not available on long or extended cab with medium doors. | $453 |
| 1675-0210 | Cab roof mounted 3 sided roof mounted AC shield with 45 degree front slope painted job color. | $988 |
| 1675-0213 | Mounting plate for battery charger receptacle indicator and air inlet (if applicable). Plate to be removable stainless steel painted job color. | $155 |
| 1675-0215 | Brushed stainless steel 4" wide scuff plates for cab handrails (PR). | $209 |

| Item No. | Description | |
|---|---|---|
| 1675-0217 | LINE-X package for custom cab roof: All roof plate surfaces including the rear lip over the back wall and trough plates if applicable shall have LINE-X coating. All plate work (risers boxes etc) fabricated at E-ONE and installed on the roof shall be included in this package. | $1,719 |
| 1675-0218 | LINE-X package for custom cab back wall (exterior only): The entire exterior back wall (platework and extrusions) shall have LINE-X coating. | $1,342 |
| 1675-0219 | LINE-X package for custom cab fenderettes. | $145 |
| 1675-0220 | Chrome fire bell. Location: Officer's side of front bumper extension. | $1,414 |
| 1675-0221 | Window cab side fixed driver's above medical cabinet. | $163 |
| 1675-0222 | Fluid capacity tag to include filter model numbers for engine oil transmission fuel air hydraulic and coolant. Tire front/rear size and pressure to be included on tag. Include engine belt number(s) and egine serial number on plate. | $108 |
| 1675-0223 | SCBA bottle storage one officer side of cab behind rear door above suction piping with cast door. | $377 |
| 1675-0226 | Integral 110V heated glass for rear vista windows. Includes switch on pump panel. | $3,192 |
| 1675-0227 | Integral 110V heated glass for rear vista windows. Includes switch on rear overhead. TME cab with rear wipers only. | $3,192 |
| 1675-0228 | The aerial roof trough to have a 1/8" embossed aluminum diamond plate overlay. | $510 |
| 1675-0229 | Pair of one piece knurled stainless steel 18" handrails located just behind driver and officer front door one each side. | $512 |
| 1675-0230 | Pair of one piece knurled stainless steel 36" handrails located just behind driver and officer rear door (ALS doors if equipped) one each side. | $601 |
| 1675-0232 | Customer supplied electric fire bell for dealer installation. Includes: bracing under extended front bumper extension (as applicable) and switch in officer side overhead panel. Location: Officer's side of front bumper extension. | $437 |
| 1675-0234 | Hansen amber LED cab handrails upgrade (EA). | $200 |
| 1675-0235 | Akron mounting fixture model# 14950007 for Akron 1495 Ladder Pipe monitor. Locate top of cab roof on driver side. | $602 |
| 1675-0236 | Recess mount for officer side exterior front cab handrail. Mount to match exterior paint. | $321 |
| 1675-0237 | Window cab side fixed (EA). Locate officer canopy area below side facing flood light. | $163 |
| 1675-0239 | Sign plate smooth 36" x 48" mounted on cab roof (vista if equipped). Color: [#COL]. | $324 |
| 1675-0240 | Custom cab roof trough overlay shall have LINE-X coating. | $319 |
| 1675-0241 | Hansen rubber insert handrail material on exterior of cab ipos. | $77 |
| 1675-0243 | Diamond plate trim approx. 2" tall below lower driver and officer side SCBA bottle doors on cab. | $154 |
| 1675-0244 | Transverse compartment insert to accommodate: (1) one Stokes Basket Model CMC Rescue S/S dimensions 83"L X 23"W X 7-1/4"H. (2) two backboards with dimensions 16"W X 2"T X 72"L and long strut storage. (1) one 17' Little Giant Model 17 at the rear of the compartment with dimensions 25"W X 57"L X 8-1/4"T. The forward compartment area shall be for additional storage. The compartment is constructed with .187 aluminum plate and include straps to secure equipment. | $5,909 |
| 1675-0245 | Polished stainless steel trim belt on front of cab. Location: [#LOC]. | $728 |
| 1675-0246 | Electric chrome fire bell with eagle. Location: Officer's side of front bumper extension. Includes switch on officer side overhead console. | $1,978 |
| 1675-0250 | Pair of one piece knurled stainless steel 48" handrails located just behind driver and officer rear door (ALS doors if equipped) one each side. | $690 |
| 1675-0252 | Customer supplied electric fire bell for dealer installation. Includes: bracing under extended front bumper extension (as applicable) and switch in officer side overhead panel. Location: Driver's side of front bumper extension. | $437 |
| 1675-0254 | Rear cab and vista glass (if so equipped) to be dark tint (smoked glass with approx 30% light transmittance) IPOS. Includes all glass rearward of front cab doors. | $575 |
| 1675-0256 | Mounting plate for battery charger receptacle indicator and air inlet (if applicable). Plate to be removable stainless steel painted black. | $155 |
| 1675-0257 | LINE-X rear cab corner scuff plates. | $336 |
| 1675-0258 | Diamond plate rear upper cab scuff plates for telepole light heads. | $154 |
| 1675-0259 | LINE-X rear cab telepole light head scuff plates. | $336 |
| 1675-0260 | Swirled aluminum 7" wide scuff plates for cab handrails (PR). Includes adjusting handrails reward to accomodate scuff plate. Not available on medium cab or battery charge receptacle to rear of front cab door. | $305 |
| 1680-0000 | Air intake emergency shut-down. Dash mounted guarded switch. | $1,653 |
| 1680-0001 | Block heater 1000 watt. | $521 |
| 1680-0002 | Block heater 1500 watt. Available on ISM ISX and S60 only. | $533 |
| 1680-0005 | Thermatic fan clutch. | $1,446 |

| Item No. | Description | |
|---|---|---|
| 1680-0006 | Drivelines 1710. | $1,076 |
| 1680-0007 | Drivelines 1810. Required on 1550 lb/ft torque or greater engines. | $1,686 |
| 1680-0008 | Tow eyes front painted below bumper/cab (PR). | $272 |
| 1680-0009 | Tow eyes front stainless steel below bumper / cab (PR). | $682 |
| 1680-0010 | Tow eyes front stainless steel mounted in up position. Requires 16" minimum bumper extension on custom chassis and 18" minimum bumper extension on commercial chassis. | $682 |
| 1680-0011 | Tow eyes rear below body painted. | $625 |
| 1680-0012 | Tow eyes rear frame painted. | $556 |
| 1680-0013 | Tow hooks front stainless steel in down position. Requires extended bumper on commercial chassis. If Non-Extended bumper on Comm. Chassis tow hooks are to be ordered with chassis. | $815 |
| 1680-0014 | Tow hooks front stainless steel mounted up. Requires 12" minimum bumper extension on custom and commercial chassis. | $815 |
| 1680-0015 | Trailer hitch Class III mounted rear. | $995 |
| 1680-0016 | Exhaust end chrome plated. Due to high heat from current emission exhaust systems dis-coloring of exhaust end may occur after prolonged use. | $267 |
| 1680-0017 | Hotshift PTO. | $2,005 |
| 1680-0021 | Exhaust end for Plymovent. For exhaust extraction system. | $276 |
| 1680-0022 | Auto lube system Vogel. Chassis points only. | $4,284 |
| 1680-0034 | Hotshift PTO heavy dutyfor Bronto only | $5,601 |
| 1680-0042 | Tow hooks front painted in the down position. | $281 |
| 1680-0051 | Aerial hydraulic activation system. | $1,296 |
| 1680-0053 | Storage below rear bench seat. (1) hinged door on each side of the bench seat. | $622 |
| 1680-0056 | Cold weather pkg for cab. Includes (2) 8" fans fan clutch additional insulation on the front wall and insulation on rear cab heater hose lines (if equipped). | $3,431 |
| 1680-0066 | Vogel auto lube system for chassis points (up to 26) and jack system points (12). | $5,784 |
| 1680-0076 | Under front bumper 9K winch receiver. Includes electrical connection for portable winch application. Custom chassis only. | $1,886 |
| 1680-0079 | Pressure Sensing Governor DDEC Engine - Required with Fire Commander | $1,377 |
| 1680-0080 | Tow eyes front painted in up and down position. Tow eyes to use same holes for both sets. | $540 |
| 1680-0081 | Special cover kit for Memphis to include auto lube Vogel driver's side front frame and cannon plug cover | $432 |
| 1680-0082 | The air intake emergency cable reset. Officer side of cab below the front bumper. Locate so cable is not visible or can be pulled without reaching under the bumper. | $219 |
| 1680-0083 | Cooler for steering system. | $906 |
| 1680-0087 | Radiator brush guard below cab. | $608 |
| 1680-0091 | Tow eyes front stainless in up position and painted in down position. | $948 |
| 1680-0092 | Tow blocks under front bumper extension. | $327 |
| 1680-0093 | Tow eyes front stainless steel with 3" holes mounted in up position. Requires 16 inminimum bumper extension on custom chassis and 18 in minimum bumper extension on commercial chassis. | $919 |
| 1680-0095 | Side underbody 9K winch receivers. Includes (2) side facing- (1) each below rearward body compartments for portable winch with electrical connection for winch. | $1,595 |
| 1680-0096 | Side underbody 9K winch receivers. Includes (2) side facing- (1) each below body compartment ahead of the rear wheels for portable winch with electrical connection for winch. | $1,595 |
| 1680-0099 | Block heater 1500 watt wired through inlet receptacle. Available on ISM ISX and S60 only. | $533 |
| 1680-0116 | Oil pan heater. Fleetguard 22MM 150W/120V wired to shoreline. | $494 |
| 1680-0118 | Cold Weather Pkg for Cab. Includes fan clutch and additional insulation on the front wall and insulation on rear cab heater hose lines (if equipped). | $3,056 |
| 1680-0121 | Under the body there shall be equipped with a pair of 12000 lb receiver assemblies each with a removable swivel hoist ring or can be used with a Class III trailer hitch. One each side of apparatus. The receivers shall be locate in front of rear axle. Final location will depend on Engineering and driveline. 12v not included. | $3,490 |
| 1680-0122 | Tow eyes rear below body painted. Eyes to be on edge pointing to rear. | $625 |
| 1680-0124 | Boom support modification - Tiller. Support to accommodate a 50" wide ladder tunnel. | $469 |
| 1680-0126 | Block heater 1000 watt wired through inlet receptacle (or block heater auto eject inlet receptacle if so equipped). | $521 |
| 1680-0127 | Block heater thermostat. | $271 |
| 1680-0131 | Tow eyes rear frame stainless steel. | $1,310 |
| 1680-0134 | Fuel tank steel skid plate. For use with 50/65 gal tanks. Includes front corner bottom and rear corner of tank. | $1,202 |

| Item No. | Description | |
|---|---|---|
| 1680-0137 | Diesel Exhaust Fluid (DEF) 10 gallon tank. Location: [#LOC]. | $1,595 |
| 1680-0145 | Diesel Exhaust Fluid (DEF) 5 gallon tank. Location: [#LOC]. | $1,513 |
| 1680-0154 | Oil pan heater - Fleetguard 150W/120V wired to block heater receptacle. ISC/ISL only. | $432 |
| 1680-0159 | Vogel auto lube system for chassis points (up to 26) and Bronto inboard jack extension cylinder points (4). | $4,786 |
| 1680-0181 | Oil pan heater - Fleetguard 300W/120V wired to block heater receptacle. ISM only. | $547 |
| 1680-0186 | Under the body to be equipped with a pair of receiver assemblies each with a removable swivel hoist ring. One each side of apparatus. The receivers shall be square steel tubing same size as a receiver for a Class III trailer hitch. Located to rear of front outriggers. | $3,490 |
| 1680-0187 | On-Spot tire chain installation. Requires pre-wire option located in Cab Electrical. Requires engineering review and approval if less than 176" WB. | $2,856 |
| 1680-0188 | Aerial hydraulics installed on bottom port of EVS4000/4500 transmission (to allow for flat rear cab floor). Requires drive through hyd pump option (6150-0015) on aerials with hyd generator. | $1,664 |
| 1680-0189 | Tow eyes front painted mounted in up position. Requires 16" minimum bumper extension on custom chassis and 18" minimum bumper extension on commercial chassis. | $272 |
| 1680-0193 | Tow eyes rear below body stainless steel. | $2,066 |
| 1680-0194 | Tow eyes front stainless steel through bumper / cab (PR). | $944 |
| 1680-0196 | Tow eyes front painted through bumper / cab (PR). | $530 |
| 1680-0212 | Tow eyes mid-ship painted in down position pair | $272 |
| 1680-0217 | Driveline guard (EA). | $311 |
| 1680-0218 | Rear skid plates (PR). Locate below rear of body aft of rear outriggers. | $3,003 |
| 1680-0226 | Shared aerial and hyd gen PTO system (for use with NPNT CR100/137/95-Platform with SmartPower or Harrison gen)(Requires eng approval with water pump). | $4,209 |
| 1680-0227 | Tow eyes front painted with 3" holes below bumper/cab (PR). | $682 |
| 1680-0228 | Under front bumper Class III hitch receiver. Custom chassis only. | $1,527 |
| 1680-0231 | Insta-chain tire chain installation. Requires pre-wire option located in Cab Electrical. | $2,856 |
| 1680-0239 | Tow eyes rear frame painted mounted low just above tailboard. | $556 |
| 1680-0242 | Cold weather pkg for cab. Includes additional insulation on the front wall and insulation on rear cab heater hose lines (if equipped). | $3,399 |
| 1680-0245 | Upgrade receiver and tow eye extension. The front bumper 9K winch receiver shall be extended forward approximately 1" beyond front bumper IPOS (rather than at the under bumper location). Custom chassis only. | $756 |
| 1680-0247 | Trailer hitch Class III mounted rear optmized mounting to be in a raised mounting position. | $995 |
| 1680-0249 | Driveline guards (as applicable). | $926 |
| 1680-0250 | Diesel Exhaust Fluid (DEF) 5 gallon tank for 2013 / 2016 EPA engines. Location: [#LOC]. | $1,761 |
| 1680-0251 | Diesel Exhaust Fluid (DEF) 10 gallon tank for 2013 / 2016 EPA engines. Location: [#LOC]. | $1,840 |
| 1680-0255 | Seperate PTO for aerial hydraulic pump IPO shared system. | $1,993 |
| 1680-0258 | Insta-chain tire chain installation. Includes 12 chain sytem. Requires pre-wire option located in Cab Electrical. | $2,982 |
| 1680-0271 | Tow eyes front painted through bumper / cab (PR). Eyes to be 1" thick material. | $530 |
| 1680-0272 | Plumb Vogel lube system to On-Spot tire chains. | $204 |
| 1680-0273 | Additional engine insulation under cab. Includes forward and rearward cab areas. See Engineering for installation instructions. | $1,435 |
| 1680-0274 | On-Spot tire chain installation. Includes 12 chains per wheel. Requires pre-wire option located in Cab Electrical. Requires engineering review and approval if less than 180" WB. | $3,062 |
| 1680-0277 | Under the body there shall be equipped with a pair of receiver assemblies each with a removable swivel hoist ring and chrome tow hooks (1) each side to act as tie down points. One each side of apparatus. The receivers shall be square steel tubing same size as a receiver for a Class III trailer hitch. Located to rear of front outriggers. | $3,577 |
| 1680-0279 | Steel tow bar located below rear compartment mounted to chassis frame for towing purposes only painted black. | $1,884 |
| 1680-0282 | Tow eyes rear below body painted. 1" thick material with 3" diameter hole staight down from chassis frame. | $746 |
| 1680-0286 | Tow eyes front painted in down position with additional officer only in the up position. | $406 |
| 1680-0287 | Tow eyes front painted bright silver through bumper / cab (PR). | $530 |
| 1680-0288 | Oil pan heater for ISL engine. Fleetguard 22MM 150W/120V wired to winterization shoreline receptacle. | $494 |
| 1680-0290 | Bevel interior holes of front and rear tow eyes. | $495 |
| 1680-0291 | Tow forks under front bumper extension. | $671 |
| 1680-0292 | Auto lube system CPL. Chassis points only. | $4,457 |

| Item No. | Description | |
|---|---|---|
| 1680-0293 | Tow hooks front painted in the outboard position. | $281 |
| 1680-0295 | Trailer hitch Class I receiver mounted rear. | $608 |
| 1680-0300 | Steel lift bar located below rear compartment mounted to chassis frame for lifting purposes only (no towing) painted black. | $1,884 |
| 1680-0301 | Cord connector. Daniel Woodhead 3 wire NEMA 5-20 straight blade male located for block heater routed to driver side battery box. | $158 |
| 1680-0302 | Steel tow/lift bar located below rear compartment mounted to chassis frame painted black. | $3,007 |
| 1680-0306 | Air intake emergency shut-down. Pump panel mounted guarded switch with reset switch located below front bumper. | $1,856 |
| 1680-0307 | 4-ply upper and lower radiator hose ipos. | $73 |
| 1680-0309 | Muncie digital tachometer. Locate display in cab visible to driver. | $698 |
| 1680-0311 | Fan drive w/thermatic clutch permanently engaged. | $1,446 |
| 1680-0316 | CPL auto lube system for chassis points (up to 26) and jack system points (12). | $8,164 |
| 1680-0318 | 1/4 turn heater valves for cab and body(if equipped). Includes centralized location under cab with mechanically fastened tags. | $623 |
| 1680-0319 | Tow eyes front painted below bumper/cab pointed forward. (PR). Custom chassis only. | $1,886 |
| 1680-0320 | Weather resistant box for tire chain solenoid. | $117 |
| 1680-0321 | Steel tow/lift bar located below front of cab mounted to chassis frame painted black. | $4,787 |
| 1680-0327 | Block heater 1500 watt wired through APU. Available on ISM ISX and S60 only. | $533 |
| 1680-0328 | Oil pan heater - Fleetguard 450W/120V wired to APU only. ISX only. | $547 |
| 1680-0329 | Air clutch for second hyd pump. For use with dual hyd pump systems on a single PTO. Requires first hyd pump to be drive-thru style. | $3,808 |
| 1680-0331 | Tow eyes front painted job color mounted in up position. Requires 16" minimum bumper extension on custom chassis and 18" minimum bumper extension on commercial chassis. | $405 |
| 1680-0334 | Oil pan heater - Fleetguard 450W/120V wired to block heater receptacle. ISX only. | $547 |
| 1680-0335 | 3M model 2084 sealant between the frame frame liner (if equipped) crossmembers and rear axle suspension brackets to prevent buildup of road salt and dirt and corrosion at all bracket to frame rail and frame to frame rail attachment points. | $887 |
| 1680-0338 | Extensions for chassis and cab tilt grease fittings. Extensions to be routed to three groups (left front right front and rear). | $944 |
| 1680-0344 | Tow eyes front painted in down position with additional stainless steel officer only in the up position. | $612 |
| 1680-0349 | Tow eyes rear below body painted. 1" thick material with 3" diameter hole staight down from chassis frame. For use as lifting eyes at rear of chassis. | $1,771 |
| 1680-0351 | All applicable .625" heater hose to have constant torque clamps. Includes end union and T-fittings. | $343 |
| 1680-0356 | Rope tie off. Side underbody Rope Tie Off. Includes (2) side facing- rope tie off points (1) each below body located per engineering approval. Rating: 1000 lbs with 10:1 safety factor with straight line pull. | $1,915 |
| 1685-0001 | Cab interior black. Does not include seat color. | $360 |
| 1685-0002 | Cab interior burgundy. Does not include engine cover or seat color. | $2,963 |
| 1685-0003 | Fold down computer tray bolted to engine cover on officer's side. | $767 |
| 1685-0004 | Storage below rear bench seat for four SCBA bottles. | $698 |
| 1685-0008 | Control lanyard Y type for air horns. | $179 |
| 1685-0011 | Stainless steel pair of window bars for rear cab doors. | $391 |
| 1685-0026 | Door Seat Riser Ovrlap drv/off for the Typhoon only. | $203 |
| 1685-0027 | Heater rear cab w/o cover (PR). 23000 BTU ea. | $1,556 |
| 1685-0028 | Heaters rear cab w/covers (PR). | $1,662 |
| 1685-0039 | Window bars stainless steel pair for canopy windows. | $391 |
| 1685-0050 | Modify rear bench seat riser to have storage access from each side for (4) SCBA bottles (2) ea side. Hinge doors as to work best with rear heater locations. | $1,627 |
| 1685-0056 | Heater rear cab w/o cover (PR) and front cab heater with heat to the feet for the driver and officer. | $1,556 |
| 1685-0057 | Heaters cab rear with covers (PR) and front heater with heat to the feet for the driver and officer. | $1,662 |
| 1685-0058 | Interior cab access panel. Driver side of cab for access to rear of shore line receptacle. Panel to be 8" x 8". | $316 |
| 1685-0059 | Locking seat riser door. Driver and officer seat riser doors are to include a locking push-button latch. Key type to be 1250. | $156 |
| 1685-0061 | Interior cab access panel. Officer side of cab for access to rear of shore line receptacle. Panel to be 8" x 8". | $316 |

| Item No. | Description | |
|---|---|---|
| 1685-0062 | Label package for Memphis units only to include labeling of items behind all removable panels and check loose items in cab warning labor for off side dash and cab tilt access door. | $540 |
| 1685-0063 | Medical glove box. Mount to rear area of engine cover. Includes slotted top for dispensing gloves without opening hinged lid. Box to be same color as interior of cab. Secure lid in closed position with small butterfly latch. | $262 |
| 1685-0064 | Embossed diamond plate foot plates located at driver officer and rear facing seat positions where feet would rest while seated. | $293 |
| 1685-0066 | Officer seat riser storage compartment door to be on front of riser hinged towards engine cover. | $184 |
| 1685-0068 | Rear engine cover diamond plate trim. | $226 |
| 1685-0069 | Hinged interior cab gauge panel in front of driver. Includes (9) gauges- English dominant. Panel to be hinged for access to driver gauge cluster. | $2,205 |
| 1685-0072 | There shall be no E-One logos on cab seats. | $2,130 |
| 1685-0075 | Removable ABS panel 35"H x 4.5"W for officer side cab wall to route communication wires from officer side communication cabinet to officer side dash area. Panel to be attached with screws. | $116 |
| 1685-0078 | Kick Plate in front of the officer to be diamond plate. | $150 |
| 1685-0080 | Embossed diamond plate foot plates located at driver officer and forward facing rear seat positions where feet would rest while seated. | $366 |
| 1685-0084 | 3/16" Aluminum plate on top engine access door. To have swirl finish and be spaced up approx 1/2". | $262 |
| 1685-0085 | Center cab dash electrical panel to be held in place with coin slot style fasteners. | $96 |
| 1685-0086 | Stainless steel scuff plate under interior canopy window. | $348 |
| 1685-0088 | Removable ABS panel 35"H x 4.5"W for driver side cab wall to route communication wires from driver side communication cabinet to driver side dash area. Panel to be attached with screws. | $116 |
| 1685-0089 | Louvers for officers seat riser. Locate louvers in the front side and door of riser (as applicable). | $354 |
| 1685-0090 | Rear cab headliner to be six pieces IPOS. | $270 |
| 1685-0091 | Mount customer supplied computer tray on engine cover. Includes support plates on the top and bottom. | $235 |
| 1685-0093 | Black rubber handrail mounted parallel to seats on rear of engine cover for driver and officer rear facing seats. | $188 |
| 1685-0094 | Storage below rear bench seat. (1) horizontal hinged door on the front of the rear bench seat. | $449 |
| 1685-0095 | Locking rear seat riser door (PR). Seat riser doors are to include a locking push-button latch. Key type to be 1250. | $156 |
| 1685-0104 | Map pockets 14 gauge stainless steel (PR). Includes vinyl trim around top of opening and nylon strap with snap to retain contents. Locate pockets one each side on rear cab wall centered between center cabinet and side wall of cab with bottom approx 20'' above floor. | $422 |
| 1685-0105 | Sun visor strap (PR) with snap fasteners. | $146 |
| 1685-0106 | Rear engine cover radio cabinet. Cabinet to have access from the top and from rear. | $698 |
| 1685-0107 | Interior grab handle rubber covered (2). Locate one each side at interior of rear cab door opening (at rear of opening). | $217 |
| 1685-0108 | Locking seat riser door. Driver and officer seat riser doors are to include a locking push-button latch. Key type to be CH-751. | $83 |
| 1685-0109 | Locking rear seat riser door (PR). Seat riser doors are to include a locking push-button latch. Key type to be CH-751. | $83 |
| 1685-0110 | Storage below rear bench seat for two SCBA bottles (one each side). | $698 |
| 1685-0111 | Rear cab interior wall overlay with swirl and clear coat finish. | $705 |
| 1685-0112 | Integrated Roll Sensor (IRS) for RollTek air bag system. | $2,261 |
| 1685-0113 | Integrated roll sensor slave module for RollTek air bag system. | $1,052 |
| 1685-0114 | Integrated Head Curtain (IHC) for RollTek air bag system. | $636 |
| 1685-0115 | Integrated Belt Pretensioner (IBP) for RollTek air bag system. | $370 |
| 1685-0116 | Interior grab handle rubber covered (2). Locate one each side at interior of front cab door opening (at rear of opening). | $217 |
| 1685-0117 | Rear cab interior wall overlay with Zolatone finish. | $459 |
| 1685-0119 | 3/16" Aluminum plate on top engine cover forward of access door. To have swirl finish and be spaced up approx 1/2". | $262 |
| 1685-0120 | Rear cab interior wall overlay with diamond plate finish. | $577 |
| 1685-0121 | Flat bar (.5" x 2") installed on rear cab wall up high with full length shelf track. | $324 |

| Item No. | Description | |
|---|---|---|
| 1685-0126 | SCBA Storage tubes (4) horizontally mtd (2) each side in lower rear cab compartments above floor level. | $814 |
| 1685-0127 | Locate rear cab heaters below front of rear wall seat riser(s). Includes louvers for ventilation. | $381 |
| 1685-0134 | Embossed diamond plate foot plates located at each seating position where feet would rest while seated. | $293 |
| 1685-0135 | Hot climate insulation package. Includes insulation for ceiling front wall rear wall side walls below seat risers and in doors. | $2,388 |
| 1685-0136 | Storage in rear wall free standing seat riser. (1) horizontal hinged door on the front of the free standing seat riser. | $348 |
| 1685-0138 | 3/16" Aluminum plate on top engine cover forward of access door. Finish to match cab interior and be spaced up approx 1/2". | $262 |
| 1685-0139 | 3/16" Aluminum plate on top engine access door. Finish to match cab interior and be spaced up approx 1/2". | $262 |
| 1685-0140 | Storage at rear engine cover w/ cargo net top. (3) sided storage approx. 44.5"W x flush with upper engine cover high x sloped area of engine cover deep. Storage area to match cab interior. | $764 |
| 1685-0146 | Extended electrical access panel in cab. Panel to extend up to allow for radio/equipment installation. | $602 |
| 1685-0147 | Narrow rear cab wall support channel. Not available with rear wall seating. | $223 |
| 1685-0153 | Storage below rear bench seat. (2) horizontally hinged doors on the front of the rear bench seat. | $897 |
| 1685-0154 | Communications cabinets (1/8"). 20.5"W x 16"H x 20"D INT (PR). Includes (2) roll out trays and cargo netting over openings. Location: One each side over cab wheel wells. Includes a smooth plate cover with matching cab finish for customer installed wiring between towers. | $2,699 |
| 1685-0155 | Cold climate insulation package. Includes insulation for ceiling front wall rear wall side walls below seat risers and in doors. | $2,388 |
| 1685-0161 | Severe duty dash package. Includes smooth plate alum center and officer side dash painted to match cab interior and lower dia plt kick panels. | $963 |
| 1685-0162 | Severe duty engine cover. Includes floor type matting on sides top forward and top rearward engine covers with sanded finish smooth aluminum trim. | $1,043 |
| 1685-0164 | Severe duty engine cover. Includes floor type matting on sides top forward and top rearward engine covers with smooth aluminum trim painted to match cab interior. | $1,225 |
| 1685-0165 | Storage below rear bench seat. (1) horizontally hinged door on the front of the rear bench seat. Hinge hardware mounted with acorn nuts outside. | $449 |
| 1685-0172 | Storage below rear bench seat. (1) hinged door on each front corner of the bench seat base. | $856 |
| 1685-0174 | Louvers for rear bench seat riser. Locate louvers on each side of riser. | $354 |
| 1685-0180 | On Scene Solutions Talon helmet holder (EA). Location: [#LOC]. | $409 |
| 1685-0182 | Severe duty dash package. Includes smooth plate alum center officer side dash and lower kick panels; all painted to match cab interior. | $963 |
| 1685-0183 | Heater cab with heat to the feet for the driver and officer | $812 |
| 1685-0184 | Heater rear cab w/o cover. Includes 110V blower. | $1,292 |
| 1685-0185 | Locking rear seat riser door. Seat riser door to include a locking push-button latch. Key type to be 1250. | $156 |
| 1685-0188 | Stainless steel trim low on officer side of engine cover (to match driver side). CII / Typhoon only. | $134 |
| 1685-0189 | Identification plate GSA units. Located on inside of driver's door. Exact information and wording to be determined at time of final inspection. See specification. | $285 |
| 1685-0191 | Diamond plate cover for battery charger/air compressor. Includes louvers for ventilation. | $228 |
| 1685-0192 | PAC TRAC panels vertical stacked with tool mounting grooves orientated horizontal on back wall of cab each side outboard of bench seat. | $1,490 |
| 1685-0193 | Slide-out MDT mount officer cab dash. Requires severe duty dash w/MDT notch. | $1,092 |
| 1685-0194 | Officer cab dash modification for Havis slideout MDT bracket. Not available with heat to feet or side roll protection. | $472 |
| 1685-0197 | Rear upper cab interior wall 3/16" overlay with Zolatone finish. Approximately 20" high. | $368 |
| 1685-0199 | Rear engine cover brushed stainless steel trim. | $475 |
| 1685-0201 | Severe duty dash package. Includes smooth plate alum center and officer side dash painted to match cab interior and lower dia. plt. kick panels. Officer cab dash notched for MDT slide-out bracket(s). | $1,173 |
| 1685-0204 | Side mount telescopic computer tray bolted to engine cover on officer's side. | $949 |

| Item No. | Description | |
|---|---|---|
| 1685-0205 | Storage at rear engine cover w/ drop down rear door. (3) sided storage approx. 44.5"W x flush with upper engine cover high x sloped area of engine cover deep with (2) equally spaced vertical dividers. Storage area to match cab interior. | $764 |
| 1685-0218 | KNOX-BOX KeySecure model 2642. Includes E-ONE installed wiring to switched 12v power supply. Location: officer side of engine cover. Requires dept to purchase software package from KNOX-BOX (if they do not already have it). | $1,243 |
| 1685-0219 | Interior grab handle rubber covered (2). Locate one each side at interior of rear cab door opening (at front of opening). | $217 |
| 1685-0220 | KNOX-BOX SentraLok A Model 3923 with red strobe. Includes E-ONE installed wiring to switched 12v power supply. Location: left side of officer dash. Requires dept to purchase software package from KNOX-BOX (if they do not already have it). | $1,737 |
| 1685-0221 | Severe duty dash package. Includes smooth plate alum center and officer side dash painted to match cab interior and lower dia plt kick panels. Officer cab dash notched with recessed glove box. Includes angled notepad holder on top. Not available with Rolltek. | $1,416 |
| 1685-0222 | Storage at lower rear engine cover w/ cargo net top. Approx. 30"W x 12"H x sloped area of engine cover deep. Storage area to match cab interior. | $764 |
| 1685-0223 | Storage at rear engine cover w/ lift-up door. Storage approx. 44.5"W x flush with upper engine cover high x sloped area of engine cover deep. Storage area to match cab interior. | $764 |
| 1685-0225 | Storage at rear engine cover w/ lift-up door. Storage approx. 37.5"W x flush with upper engine access cover high x 34" deep (front to rear). Includes forward 12" stationary cover. Storage area to match cab interior. | $1,059 |
| 1685-0235 | Foot switch Linemaster model 632S to control air horns located [#LOC]. Includes 25 degree diamond plate bracket. | $120 |
| 1685-0237 | KNOX-BOX KeySecure model 2642. Includes E-ONE installed wiring to switched 12v power supply. Location: officer side cab dash inboard. Severe duty dash only. Requires dept to purchase software package from KNOX-BOX (if they do not already have it). | $1,243 |
| 1685-0238 | Insulation - front cab wall. Includes insulation on rear cab heater hose lines (if equipped). | $108 |
| 1685-0239 | Cab floor to be overlayed with 1/8" embossed aluminum diamond plate; front and rear. Single piece with no gaps around perimeter. | $954 |
| 1685-0240 | Slide-out MDT mount officer cab dash with dock. Requires severe duty dash w/MDT notch. Not available with heat to the feet. | $1,497 |
| 1685-0243 | Pac Trac panels vertically stacked on back wall of cab each side outboard of medical cabinet. | $1,490 |
| 1685-0247 | Cab floor to be overlayed with 1/8" embossed diamond plate; front and rear. Single piece with no gaps around perimeter. Front plates to be sand blasted to remove shine. | $1,140 |
| 1685-0251 | Diamond plate cover to protect the steering wheel shaft/knuckle. | $222 |
| 1685-0252 | Storage cabinet center rear crew area. Box to be installed from behind engine cover to rear wall with open sides and (1) adjustable shelf. Sides will be provided with cargo net covers. Handrails provided on each side top of cabinet. Cabinet to match cab interior. | $2,942 |
| 1685-0254 | Storage box locking mounted on the rear lower engine cover. Engine cover lock box measures 18x24x9 with a lift top lid and a locking latch. Finish will match cab interior. | $871 |
| 1685-0258 | SCBA rear wall peg tool board mount for three (3) Lifeguard Smart Dock 2 SCBA brackets. The "peg board" SCBA tool board shall be mounted between the two (2) rear outboard seats with adequate room between each pack to mount complete SCBA packs. Peg board sizing shall be approximately 40" wide X 35" high and shall be spaced off the rear wall approximately 1". The peg board shall be finished with Zolotone. | $2,583 |
| 1685-0261 | Storage below rear bench seat. (1) cargo net (black) on each side of the bench seat to gain access to storage area. | $622 |
| 1685-0262 | Storage below rear bench seat for two SCBA bottles (driver side). Officer side to be open storage w/ door. | $698 |
| 1685-0263 | Severe duty dash package. Includes smooth plate alum center and officer side dash and lower kick panels; all painted to match cab interior. Officer cab dash notched for MDT slideout bracket(s). | $1,173 |
| 1685-0265 | Smooth plate cover(s) for battery charger and air compressor. These cover's shall be painted to match cab interior and shall include louvers as required for ventilation. | $228 |
| 1685-0266 | Bolt-in partition wall. Locate under bench seat centered between driver and officer side. | $227 |
| 1685-0267 | Modify rear bench seat riser to have storage access from each side for up to (2) 20lb ABC extinguishers (1) ea side. | $1,410 |
| 1685-0269 | Storage box approximately 11" wide x 10" high x 26" deep made from 1/8" diamond plate aluminum centered on to rear cab floor. The box shall cradle (1) 2.5 gallon water fire extinguisher. The door shall be hinged with push button latches to provide easy access to the extinguisher in its stowed position stored at a slight incline within the box. | $671 |

| Item No. | Description | |
|---|---|---|
| 1685-0271 | Embossed diamond plate foot plates painted with black Durabak located at each seating position where feet would rest while seated. | $412 |
| 1685-0272 | Cup holder (PR) with shallow tray located at front center of engine cover. Polyurethane construction for use with severe duty engine cover only. | $122 |
| 1685-0273 | KNOX-BOX MedVault 2 model 5520H3S2-4. Includes E-ONE installed wiring to battery hot. Location: rear wall of medical cabinet. Top of compartment right hand side forward facing. Requires dept to purchase software package from KNOX-BOX (if they do not already have it). | $2,707 |
| 1685-0274 | Plate aluminum 1/8" outboard of medical cabinet rear wall between extrusions behind padding. Plate to run from ceiling down to rear cab support bracket. | $222 |
| 1685-0275 | Cup holder (PR). Polyurethane construction for use in Typhoon and CII with severe duty engine cover only. Location: [#LOC]. | $149 |
| 1685-0279 | Chrome grab handle. Locate (1) on the engine cover centered between latches. | $116 |
| 1685-0281 | Control lanyard type officer side only for air horns. | $179 |
| 1685-0282 | Slideout MDT mount officer cab dash with dock (Havis DS-PAN-111 C-MD-105-Z C-HDM-135). Requires severe duty dash w/ MDT notch. Not available with heat to the feet. To include 12 VDC electrical outlet wired to battery hot. | $1,897 |
| 1685-0283 | Pac Trac panels vertically stacked on back wall of cab. | $1,490 |
| 1685-0284 | Raceway across lower engine cover; full width of cover. Painted to match cab interior. | $220 |
| 1685-0285 | Cup holder / tray for engine cover painted to match cab interior. Approx 14" wide x 10" long with tapered front corners and cup holders at each rear corner. For use in Typhoon and CII with severe duty engine cover. | $417 |
| 1685-0286 | Control lanyard Y type for air horns. Aircraft style cable (1/8" wire cable covered with clear plastic/nylon tubing) shall be used IPOS. | $230 |
| 1685-0287 | Rear engine cover trim 1/8" smooth aluminum painted to match cab interior and spaced up 1/2". Includes both horizontal surfaces and angle vertical surface between horizontal surfaces. | $475 |
| 1685-0289 | Foot switch Linemaster model 632S to control Q2B siren located [#LOC]. Includes 25 degree diamond plate bracket. | $120 |
| 1685-0290 | Pac Trac panels vertically stacked on back wall of cab between forward facing outboard seats. | $1,490 |
| 1685-0291 | 4Front air bag system with steering wheel bag driver knee bag and officer knee bag. Requires RollTek option. | $4,504 |
| 1685-0295 | The rear wall support channel shall not include pre-punched holes for optional seating not contained within this order. | $55 |
| 1685-0296 | Severe duty dash package. The officer side dash shall be lowered 2.5" below its standard height. Includes smooth plate alum center and officer side dash painted to match cab interior and lower dia. plt. kick panels. Officer cab dash notched for MDT slide-out bracket(s). The notch position shall not be modified (only the officer side dash top). Not available with heat to the feet. | $1,332 |
| 1685-0297 | Storage at rear engine cover w/ lift-up door. Storage approx. 36"W x flush with upper engine cover high x sloped area of engine cover deep. Storage area to match cab interior. | $727 |
| 1685-0298 | The cab floor shall have the pre-punched holes for the accelerator and brake pedals modified. All brake and accelerator pedal hole cutout(s) necessary shall not be visible after the pedals have been mounted in place. | $108 |
| 1685-0300 | Hook(s) stainless steel shall be provided in the cab. Location: within easy reach of the driver's seated position. | $74 |
| 1685-0307 | Cup holder / tray enlarged for engine cover painted to match cab interior. Approx 19" wide x 12" long with tapered front corners and cup holders at each rear corner. For use in Typhoon and CII with severe duty engine cover. | $449 |
| 1685-0308 | Riser rear bench seat with provisions for rear wall heaters (if equipped). For use with flip-up seats. | $1,465 |
| 1685-0312 | Locking thumb latch on DEF tank door ipos. | $70 |
| 1685-0313 | Smooth plate cover for battery charger. Includes louvers for ventilation. Cover to match cab interior. | $228 |
| 1685-0314 | Officer wheel well cabinet (1/8"). 20.5"W x 14"H x 20"D INT. Includes (1) roll out tray with 8" sides. Rear opening will have cargo netting. Includes 1" lip around perimeter of top. | $1,341 |
| 1685-0315 | Storage below rear bench seat. (1) hinged door on each side of the bench seat. The hinge shall be mounted on the forward edge of the opening each side. | $622 |
| 1685-0320 | Storage at rear engine cover w/ cargo net top. (4) sided storage approx. 44.5"W x 3" upper (13" lower) deep x 21" front to rear. ISX engines only. Storage area to match cab interior. | $764 |
| 1685-0321 | Divider below rear bench seat (PR). Requires side access doors. Location: (1) each side of front access door. | $358 |

| Item No. | Description | |
|---|---|---|
| 1685-0322 | Storage at lower rear engine cover w/ cargo net top. Approx. 30"W x 8"H x 12" deep with a center divider (front to rear). Storage area to match cab interior. | $764 |
| 1685-0324 | Storage at lower rear engine cover w/ lift up door and dividers for 3" binders. Approx. 24"W x 14"H x 12"D. Storage area to match cab interior. | $764 |
| 1685-0329 | Map pockets aluminum plate painted to match cab interior (PR). Includes vinyl trim around top of opening and nylon strap with snap to retain contents. Locate pockets one each side on front wall of rear access map box between driver and officer. | $422 |
| 1685-0330 | Pac Trac panels vertical stacked on back wall of cab officer side outboard of seat(s). | $746 |
| 1685-0333 | 3/16" aluminum plate on top engine cover forward of access door approx. 32"W x 12.5"L. Finish to black Durabak and be spaced up approx 1-1/4". Not available with cup holders. | $282 |
| 1685-0334 | VIN Tire size Paint Color and Vehicle Emissions tags to be metal engraved fastened in place with stainless steel hardware. | $683 |
| 1685-0335 | Rear engine cover swirl smooth plate (not clear coat) trim spaced 2" off cover. Includes lower horizontal surface and angle vertical surface between horizontal surfaces. | $565 |
| 1685-0336 | Storage below rear bench seat for two SCBA bottles (officer side). Driver side to be open storage w/ door. | $698 |
| 1685-0337 | Riser rear seat(s) with transverse. For use with side access ALS and flip-up ABTS seats. Transverse to be used for backboard storage. | $1,465 |
| 1685-0338 | Severe duty dash package with low profile center and officer side dash. Includes smooth plate alum center and officer side dash painted to match cab interior and lower dia plt kick panels. | $1,116 |
| 1685-0339 | Lower exterior cab steps to be equipped with Bustin Industries Type M stainless steel overlay in lieu of Gator Grip. Includes (6) 3/4" drain holes on the lower steps. | $1,024 |
| 1685-0341 | Diamond plate power strip cover (ea). | $155 |
| 1685-0343 | Storage at lower rear engine cover w/ cargo net top. Approx. 44"W x 8"H x 12" deep with (2) dividers (front to rear). Storage area to match cab interior. | $764 |
| 1685-0346 | Storage cabinet mounted on the officer wheel well offset forward toward officer seat 15.5X24X21. Includes rear facing cargo netting. | $1,038 |
| 1685-0347 | Bolt-in partition wall. Locate rear of driver seat approx. 21"W x 24"H. | $227 |
| 1685-0349 | PAC TRAC panels vertical stacked with tool mounting grooves orientated horizontal each side backwall of outboard medical cabinets. | $1,047 |
| 1685-0350 | Diamond plate storage at rear engine cover w/ drop down rear door. Approx. 41"W x flush with upper engine cover high x sloped area of engine cover deep. | $764 |
| 1685-0353 | Divider below rear bench seat; adjustable. Requires side access doors. | $358 |
| 1685-0355 | Storage below rear bench seat. (1) cargo net (black) on each side of the bench seat to gain access to storage area. Includes snaps on top and bungee cord on bottom | $622 |
| 1685-0356 | Writing surface cab dash finished same as cab interior. Location: Mount at final inspection. | $212 |
| 1685-0357 | Rear cab interior wall overlay plates with Zolatone finish each side outboard of rear seating. Approx. 15"W x 32"H. | $294 |
| 1685-0358 | Storage at lower rear engine cover w/ lift-up door (ISL only). Storage approx. 44.5"W x 15"H x 12"D. Storage area to match cab interior. | $764 |
| 1685-0362 | Cab floor overlays. Front and rear cab floors to be overlayed with diamond plate painted with black Durabak. Single piece with no gaps around perimeter. | $1,270 |
| 1685-0363 | Locking seat riser door. Officer seat riser door is to include a Simplex model 9672C-20-260-41 combination lock with satin chrome finish and black trim ring. Not available with air or electric seats. | $372 |
| 1685-0364 | Recessed access panel in MDT notch on officer side cab dash. Approx. 8" x 8". | $212 |
| 1685-0365 | Air ride seat pull down (S4) for RollTek air bag system. | $984 |
| 1685-0366 | Side Rollover Airbag (SRA) for RollTek air bag system. | $636 |
| 1685-0367 | Diamond plate tray rear engine cover. Approximately 43"W x 7.5"D x 2.5"H. Included strap over center of tray. | $410 |
| 1685-0368 | Pair of 36" handrails located inside driver and officer rear door on rear interior wall. Not available with outboard rear wall seats. | $412 |
| 1685-0369 | Severe duty dash package with low profile officer side dash. Includes smooth plate alum center and officer side dash and lower kick panels; all painted to match cab interior. | $1,173 |
| 1685-0370 | Bolt-in partition wall. Locate under bench seat side to side at pass-thru area of riser height compartments. | $227 |
| 1685-0371 | Overhead console flange re-inforcement. Includes driver and officer side consoles. | $108 |
| 1685-0373 | Transverse riser height area for use with exterior riser height compartments and fold down/flip up seats (if equipped). | $397 |
| 1685-0374 | Stack-On model PS-514-12 gun safe. Location: centered on top of rear wall medical cabinet. | $320 |

| Item No. | Description | |
|---|---|---|
| 1685-0376 | Rear engine cover shelves with cargo netting approx. 35" wide. Storage area to match cab interior. See sketch in file. | $795 |
| 1685-0377 | Fixed back wall mounted swirled overlay. Overlay to be spaced off wall approx. half inch. Location(s): center rear wall of cab full height above seat support channel x engine cover width. | $271 |
| 1685-0379 | Officer overhead panel painted FLNA4006 white. | $193 |
| 1685-0380 | Storage above rear wall medical cabinet w/ cargo net sides. Approx. 32"W x 22"H x 24" deep. Storage area to match cab interior. | $764 |
| 1685-0381 | 1/8" aluminum plate on top engine cover forward of access door approx. 32"W x 12.5"L. with 1" lips around perimeter. Finish to match cab interior and be spaced up approx 1". Not available with cup holders. | $445 |
| 1685-0382 | PAC TRAC panels vertical stacked with tool mounting grooves orientated horizontal each side backwall of outboard of fold down seats. | $1,047 |
| 1685-0383 | Upper vista wedge on driver side wheel well medical cabinet. Includes rear facing cutout 9.5H x 12.5W centered approx 1.25" up from bottom with cargo netting. Wedge to match cab interior. | $522 |
| 1685-0385 | Fixed back wall mounted swirled overlay. Overlay to be spaced off wall approx. 0.5". Location(s): driver side rear wall of cab outboard of rear wall seats full height above seat support channel. | $271 |
| 1685-0386 | Storage at upper rear engine cover between 3x3s w/ cargo net top. Approx. 34"W x 12.5"H x 12.5" D. Includes center divider (front to rear) and (2) side to side dividers in each storage area for a total of (6) slots. | $734 |
| 1685-0387 | LINE-X package: Cab floor overlays shall be coated with LINE-X. | $514 |
| 1685-0390 | Storage at rear engine cover w/ drop down rear door. (3) sided storage approx. 44.5"W x flush with upper engine cover (access door) high x approx. 22"D(upper)12"D(lower). Storage area to match cab interior. Door to be provided with cable hold open on each side. | $764 |
| 1685-0391 | Storage at rear engine cover w/ lift-up door. Storage approx. 23"W x 13"H x 10"D. Storage area to match cab interior. | $727 |
| 1685-0393 | Control lanyard type driver side only for air horns. | $179 |
| 1685-0396 | KNOX-BOX KeySecure model 2642. Includes E-ONE installed battery hot 12v power supply. Location: officer side of engine cover. Requires dept to purchase software package from KNOX-BOX (if they do not already have it). | $1,243 |
| 1685-0397 | Manual cab tilt pump handle located adjacent to pump with cable tether. | $55 |
| 1685-0399 | Front engine cover trim 1/8" sanded smooth plate spaced 1/2" off cover. Full cover over angled sides and foward of access door. | $588 |
| 1685-0400 | Pac Trac panels vertical stacked on back wall of cab driver side outboard of seat(s). | $746 |
| 1685-0401 | LINE-X package: Cab engine cover overlay trim shall be coated with LINE-X. | $514 |
| 1685-0402 | Storage at rear engine cover w/ cargo net rear opening. Storage approx. 44.5"W x flush with upper engine cover high x sloped area of engine cover deep. Storage area to match cab interior. | $764 |
| 1685-0404 | Cab steps and bolt-on steps (if applicable) to be equipped with Bustin Industries Type M stainless steel overlay in lieu of Gator Grip. | $1,732 |
| 1685-0405 | Chrome grab handle (PR). Locate (1) each side vertically mounted on rear facing seat riser(s) inboard. | $116 |
| 1685-0410 | Drug box with PharmGuard climate control system. Construction is of aluminum and an integral design utilizing the cab rear wall medial cabinet. Drug box interior area shall be lined with Dynamat insulation. Design shall include thumb style lever latches with a single Simplex combination lock centered between the thumb style latches and a front drop down hinged access door. Finish to match cab rear wall mdeical cabinet interior. Locate: Inside cab rear wall medical cabinet at floor level. PharmGuard shall be located on the officer side of the box and protrude thru the side of the rear cab wall mounted medical cabinet as required to accommodate venting and control access. | $5,206 |
| 1685-0412 | Cab interior gray with black driver dash only. Does not include engine cover or seat color. | $248 |
| 1685-0413 | Rear engine cover diamond plate trim. Each area to be individual plate spaced 1/2" off of cover. Total of (5) plates. | $503 |
| 1685-0414 | Storage at rear engine cover w/ lift-up door. Storage approx. 42.5"W (for use with ABTS seats) x flush with upper engine cover high x sloped area of engine cover deep. Storage area to match cab interior. | $764 |
| 1685-0415 | Cab interior wheel well risers angled and pushed as far forward as possible to match lower rear engine cover. | $1,493 |

| Item No. | Description | |
|---|---|---|
| 1685-0416 | KNOX-BOX MedVault 2 model 5520H3S2-4. Includes E-ONE installed wiring to battery hot. Location: above officer side wheel well medical cabinet facing rear. Requires dept to purchase software package from KNOX-BOX (if they do not already have it). | $2,707 |
| 1685-0419 | Reduced profile rear engine cover for increased legroom. Not available with rear engine cover options. | $119 |
| 1685-0420 | Officer seat riser storage opening to be provided with cargo netting in place of standard door. | $109 |
| 1685-0421 | 3/16" Aluminum plate on top engine cover forward of access door approx. 22"W x 11"D offset to officer side. Finish to match cab interior and be spaced up approx 1/2". Not available with cup holders. | $310 |
| 1685-0422 | Severe duty overhead console. Includes front full width overhead air conditioning plenum and rear facing blower. Overhead to match cab interior. | $2,413 |
| 1685-0423 | Driver side severe duty dash. Includes driver side aluminum upper dash to match cab interior with ABS gauge cluster. CIIX and TyphoonX cabs only. | $360 |
| 1685-0424 | Rear cab interior wall overlay plates with Zolatone finish each side outboard of rear seating. Approx. 24"W x 36"H. | $294 |
| 1685-0425 | Panel blank and housing cutout for severe duty dash upper tier. Includes: dash housing to be cutout behind panel overlay area. Color: Black. | $346 |
| 1685-0426 | Severe duty dash package with low profile center and officer side dash. Includes smooth plate alum center officer side dash and lower kick panels; all painted to match cab interior. | $1,116 |
| 1685-0427 | (3) severe duty dash upper tier blank panels (as applicable with other options in upper tier; ship additional panel(s) loose). Includes: dash housing to be cutout behind panel overlay areas. Color: Black. | $381 |
| 1685-0428 | Rear engine cover shelves with cargo netting approx 35" wide. Storage area to match cab interior. Includes 1/2" lip around top. See photos on file with sales. | $967 |
| 1685-0429 | Severe duty overhead console. Includes driver center and officer overhead and defrost only plenum. Overhead to match cab interior. | $1,886 |
| 1685-0430 | Heavy Duty interior panels includes: all ceilings panels back wall and side walls to be .125" aluminum smooth plate painted to match cab interior. Requires additional insulation for cab interior. | $1,640 |
| 1685-0431 | Storage below rear facing seat riser (PR). | $425 |
| 1685-0432 | Map pocket(s) aluminum plate painted to match cab interior. Includes vinyl trim around top of opening and nylon strap with snap to retain contents. Locate pocket(s) on front wall of rear access map box/medical cabinet between driver and officer. | $422 |
| 1685-0433 | Smooth plate cover for air compressor. Includes louvers for ventilation. Cover to match cab interior. | $228 |
| 1685-0436 | 3/16" Aluminum plate with sanded finish on top engine cover forward of access door. To have peg board design and be spaced up approx 1/2". | $310 |
| 1685-0438 | Divider(s) below rear bench seat to protect back of heaters from pass-thru (if equipped). | $358 |
| 1685-0439 | Diamond plate cover for PharmGuard climate control system. Includes ventilation as requrired. | $228 |
| 1685-0440 | Storage below rear bench seat. Cargo netting cover on the front of the rear bench seat. | $569 |
| 1685-0443 | LINE-X package: Lower front cab dash kick panels shall be coated with LINE-X. Requires severe duty dash. | $514 |
| 1685-0445 | Officer side cab dash access door. Includes louvers and push button latch. | $257 |
| 1685-0446 | Severe duty overhead console. Includes driver center and officer overhead ahead of air conditioning plenum. Overhead to match cab interior. | $1,358 |
| 1685-0449 | 3/16" aluminum plate on top engine cover forward of access door approx. 32"W x 12.5"L. Finish to match cab interior and be spaced up approx 1/2". Not available with cup holders. | $282 |
| 1685-0452 | Storage below rear bench seat. (1) hinged door on officer side of the bench seat. | $311 |
| 1685-0455 | Storage above driver wheel well medical cabinet w/ rear facing opening and cargo netting. Approx. 22"W x 16"H x 28" deep. Storage area to match cab interior. | $764 |
| 1685-0456 | Storage above officer wheel well medical cabinet w/ rear facing opening and cargo netting. Approx. 22"W x 16"H x 28" deep. Storage area to match cab interior. | $764 |
| 1700-0001 | Alternators Leece Neville dual 270 amp. 480 amp NFPA/540 amp SAE rating. Available only on ISX12 and Detroit EGR Series 60 engines. | $3,893 |
| 1700-0002 | Alternator Niehoff 250amp. (250 amp SAE/240 NFPA rating). Not available on Cummins ISC or Detroit Diesel engines. | $2,507 |
| 1700-0003 | Alternator Leece Neville 270 amp SAE 240 amp NFPA rating. | $2,046 |
| 1700-0004 | Alternator Niehoff 290 amp (290 amp SAE/265 NFPA rating). Not available on Cummins ISC ISL or Detroit Diesel engines. | $3,818 |
| 1700-0005 | Alternator Leece Neville 320 amp. 320 amp SAE/275 amp NFPA. | $3,308 |

| Item No. | Description | |
|---|---|---|
| 1700-0006 | Alternator Niehoff 400amp (400 Amp SAE/385 NFPA rating). Cyclone II w/Cummins ISM. Not available on Detroit Diesel Engines Recycle requires Eng. Review. | $5,790 |
| 1700-0008 | Alternator Leece Neville dual 320 amp. 560 amp NFPA/540 amp SAE rating. Available only on ISX12 and Detroit EGR Series 60 engines. | $5,352 |
| 1700-0010 | Noise filter for Leece Neville alternator. | $217 |
| 1700-0012 | Alternator Niehoff 430 amp (430 Amp SAE/380 NFPA rating). Available on Cummins ISX12 only. | $4,567 |
| 1700-0016 | Alternator Niehoff 350 amp (350 amp SAE/320 NFPA rating). Available on Cummins ISM. | $3,818 |
| 1700-0017 | Noise filter for Neihoff alternator. | $220 |
| 1700-0018 | Alternator Delco Remy 300 amp. 300 amp SAE/264 amp NFPA. | $3,243 |
| 1700-0019 | Alternator Niehoff 360 amp (360 amp SAE/320 NFPA rating). Available only on ISX12 and ISX15. | $3,311 |
| 1700-0020 | Alternator Niehoff (400 Amp SAE/385 NFPA rating). Cyclone II w/Cummins ISM. Not available on Detroit Diesel Engines Recycle requires Eng. Review. | $5,790 |
| 1700-0021 | Alternator Niehoff 360 amp (360 amp SAE/320 NFPA rating). Available only on ISL. | $3,311 |
| 1700-0023 | Alternator 320 amp for Freightliner - in place of 275 amp. | $333 |
| 1750-0000 | Ammeter gauge in cab 0-300 amps. | $324 |
| 1750-0001 | Dome lights clear large one for each cab door. | $145 |
| 1750-0002 | Dome lights red large one driver side one officer side | $145 |
| 1750-0004 | Dome lights red large one driver side one officer side rear of cab | $145 |
| 1750-0006 | Map light flexible arm. Located [#LOC]. | $203 |
| 1750-0008 | Radio AM/FM cassette with weather band located [#LOC] | $533 |
| 1750-0009 | Radio AM/FM CD with weather band located [#LOC]. | $815 |
| 1750-0010 | Radio speakers additional pair. Locate each side rear cab ceiling. | $276 |
| 1750-0011 | Speedometer officer's side overhead. | $314 |
| 1750-0012 | Swivel reading lamps (PR) overhead between driver and officer. Lights to be individually switched. | $110 |
| 1750-0013 | Turn signal Whelen 600 LED amber arrow pair located [#LOC]. | $648 |
| 1750-0015 | Windshield fans 8" pair. Location: [#LOC]. | $378 |
| 1750-0016 | Pump hourmeter in cab. | $137 |
| 1750-0019 | Battery charger Super Smart 110 volt 20 amp. | $422 |
| 1750-0021 | Battery charger Kussmaul model 1200 40 amp. | $709 |
| 1750-0022 | Battery charger Kussmaul 40 amp model 1200 with air compressor. | $2,391 |
| 1750-0024 | Auto-Eject receptacle inlet 20 amp located [#LOC] with a [#COL] cover. | $577 |
| 1750-0025 | Super Auto-Eject receptacle inlet 30 amp 120 volt located [#LOC] and with a [#COL] cover. | $843 |
| 1750-0026 | Clamshell controller mounted on officer's side of engine cover for the air horns. | $126 |
| 1750-0027 | Control push-button switch officer dash for Q2B siren. | $96 |
| 1750-0029 | Switch horn button two position DOT/air horn. | $101 |
| 1750-0030 | Switch horn button two position DOT/electronic siren. | $101 |
| 1750-0031 | Switch horn button two position DOT/Q2B. | $101 |
| 1750-0032 | Switch horn button three position DOT/air horn/electronic siren. | $204 |
| 1750-0033 | Switch horn button three position DOT/air horn/Q2B. | $204 |
| 1750-0034 | Switch additional 12 volt/15 amp. Location and function: [#LOC]. | $204 |
| 1750-0035 | Cornering light relay circuits for lights on sides of cab and / or bumper. Includes (2) relays. Requires scene light option. Interlocked with park brake. | $415 |
| 1750-0039 | Mrkr Pkg Chas LEDTrklt-Pmp/Res | $556 |
| 1750-0040 | Battery charger Super Smart 220 volt 50 Hz 20 amp. | $422 |
| 1750-0042 | Horn button selector switch 3-position DOT/ES/Q2B. | $204 |
| 1750-0043 | 12V power distribution module. Includes (6) battery hot and (6) switched hot circuits. 100 amps max (IATS). | $314 |
| 1750-0047 | The chassis shall be pre-wired for installation of tire chains. | $542 |
| 1750-0059 | Receptacle inlet 20 amp with a [#COL] cover. Location: [#LOC]. | $292 |
| 1750-0060 | Auto transfer switch 120 volt. Includes 8 place breaker box. Allows interior receptacles to be powered by either shore power or generator. | $766 |
| 1750-0061 | Control push-button switch officer dash for air horns. | $96 |
| 1750-0062 | Control push-button switch officer dash for siren. | $96 |
| 1750-0063 | Clamshell controller mounted on officer's side of engine cover for Q2B. | $126 |
| 1750-0064 | Clamshell controller mounted on on officer's side of engine cover for electronic siren. | $126 |
| 1750-0065 | Turn signal Whelen 600 halogen amber pair located [#LOC]. | $286 |
| 1750-0066 | Halogen front turn signal amber (PR). Locate: [#LOC]. | $276 |
| 1750-0067 | Additional 4" red LED dome lights (PR) for driver and officer. | $286 |
| 1750-0068 | Additional 4" red incandescent dome lights (PR) for rear of cab. | $268 |
| 1750-0069 | Additional 4" red incandescent dome lights (PR) for driver and officer. | $218 |

| Item No. | Description | |
|---|---|---|
| 1750-0070 | Additional 4" red LED dome lights (PR) for rear of cab. | $286 |
| 1750-0071 | Mount customer supplied antenna on cab roof. Location: [#LOC]. | $177 |
| 1750-0072 | 12 VDC (or 24VDC) electrical outlet in the cab wired battery hot. Location: [#LOC]. | $61 |
| 1750-0073 | Antenna base Tessco P/N 90942 (NMO Motorola Style - also called MATM style) on cab roof. Location: [#LOC]. | $95 |
| 1750-0074 | Interlock to position front intake for cab tilting. | $279 |
| 1750-0075 | English dominant main cab gauge cluster. | $2,048 |
| 1750-0076 | Metric dominant main cab gauge cluster. | $2,168 |
| 1750-0077 | Turn signal Code 3 model 65 LED amber with arrow insert (PR). Location: [#LOC]. | $725 |
| 1750-0078 | Light Whelen model PSR00FRR LED (4) red. Horizontal mounted flashing strip light on each of the inside lower cab door panels. Wire through door switch. | $796 |
| 1750-0079 | Fuel gauge for officer. | $252 |
| 1750-0080 | Conduit flexible 1.5" for radio installation center of dash to compartment under officer's seat. | $304 |
| 1750-0081 | Conduit flexible 1.5" for radio installation compartment under officer's seat to pump panel. | $268 |
| 1750-0082 | 12V power distribution module. Includes (6) battery hot and (6) switched hot circuits. 100 amps max (IATS). Location: [#LOC]. | $314 |
| 1750-0083 | Turn signal Federal Signal QuadraFlare QL64Z-ARROW LED amber pair located [#LOC]. | $276 |
| 1750-0084 | Receptacle inlet 220 volt European "Schuko" style. Includes matching cord connector. Location: [#LOC] | $416 |
| 1750-0091 | Battery Saver Kussmaul model 091-195-12 wired to battery charger receptacle. | $701 |
| 1750-0095 | Second DOT traffic horn | $135 |
| 1750-0096 | Bracket for Motorola Spectra Radio in the center overhead console offset to officer side. Dim: 7''W x 2''H must be size of the opening after break. | $83 |
| 1750-0097 | LED Light in cab to Illuminate Pump Shifter and shall activate with the headlights. | $51 |
| 1750-0115 | Master warning light switch to have a red cover (or bezel). | $39 |
| 1750-0117 | Auto eject receptacle inlet 15 amp 240 volt with a [#COL] cover. Location: [#LOC]. | $527 |
| 1750-0118 | Flexible 2" conduit with connectors. Location: Officer cab dash to bottom of medical cabinet. | $371 |
| 1750-0121 | Ammeter gauge in cab 0-400amp Cruz Pro digital. | $485 |
| 1750-0123 | Auto eject receptacle inlet 15amp location or function [#LOC] and the color shall be [#COL]. | $524 |
| 1750-0124 | Whelen 4'' round LED red door ajar light. Model 20R00FCR light with 2FLANGEC bezel. | $189 |
| 1750-0125 | Block heater receptacle 15 amp with a [#COL] cover. Location [#LOC]. | $292 |
| 1750-0126 | Conduit flexible 1.5" for radio installation center of dash to area behind officer's seat. | $304 |
| 1750-0131 | Pyrometer gauge in cab. | $576 |
| 1750-0132 | Auto transfer switch for additional battery charge receptacle. | $464 |
| 1750-0133 | Conduit flexible 1.5" for radio installation center of dash to rear bench seat. | $304 |
| 1750-0134 | Conduit flexible 1.5" for radio installation rear bench seat to pump panel. | $466 |
| 1750-0136 | Battery charger Super Smart 220 volt 60 Hz 20 amp. | $422 |
| 1750-0137 | Kwik Eject auto eject receptacle inlet 20amp located [#LOC] with a yellow cover. (Obsolete from vendor) | $625 |
| 1750-0144 | Q2B brake switch to have a red cover (or bezel). | $39 |
| 1750-0145 | Relocate the battery charger and (if applicable) air compressor to below the rear wall bench seat or rear center wall medical cabinet (if equipped). | $559 |
| 1750-0147 | Hand held flashlight orange Streamlight Survivor Division 2 right angle flashlight with 12 VDC fast charger. [#LOC]. | $271 |
| 1750-0148 | Turn signal Whelen 700 LED Chevron amber (PR). Locate [#LOC]. | $679 |
| 1750-0149 | Control push-button switch on officer's dash for Q2B siren brake. | $96 |
| 1750-0150 | Block heater receptacle 20 amp Auto-Eject with a [#COL] cover. Location [#LOC]. | $577 |
| 1750-0151 | Receptacle inlet 15amp with a [#COL] cover. Location: [#LOC] | $292 |
| 1750-0156 | Special EQ2B power amplifier location. Amp to be located [#LOC]. | $280 |
| 1750-0157 | Special battery charger location. Charger to be located [#LOC]. | $280 |
| 1750-0158 | Dome Lts Red/White LED. Package includes two lights mounted in the front and two mounted in the rear of the cab. White light wired through door and light assembly switch. Red light through light assembly switch. | $815 |
| 1750-0159 | 3 Position Q2B momentary switch (activate/off/brake). Loc: [#LOC]. | $204 |
| 1750-0160 | Dome Lts Red/White Incandescent. Package includes two lights mounted in the front and two mounted in the rear of the cab. Front cab lights: White light wired through door and light assembly mounted switch. Red light through light assembly mounted switch. Rear cab lights: White light wired through door and switch on side cab interior wall. Red light through switch on side cab interior wall. Rear dome switches to be located between side window and door opening and control light on respective side of cab. | $966 |
| 1750-0161 | Air compressor Kussmaul model 091-9B-1 120V. | $987 |

| Item No. | Description | |
|---|---|---|
| 1750-0162 | Battery charger Kussmaul model 091-35/10 35 amp battery charger / 10 amp battery saver. | $828 |
| 1750-0165 | Conduit flexible 1.5" for radio installation center of dash to compartment under driver's seat. | $304 |
| 1750-0166 | ATC override switch. | $204 |
| 1750-0167 | Block heater to be wired to battery charger receptacle with a lighted on/off switch behind driver seat. | $203 |
| 1750-0168 | Dome Lts Red/White 4" incandescent (5). Lights to be located two front and three rear. White light wired through door and light assembly mounted rocker switch. Red light through light assembly mounted rocker switch. | $735 |
| 1750-0169 | Radio speakers (3). Locate officer ceiling and each side rear cab ceiling. Wiring to terminate in officer side overhead console for customer supplied radio(s). | $473 |
| 1750-0171 | Clamshell controller mounted on on driver's side of engine cover for Q2B. | $126 |
| 1750-0172 | Special battery charger and air compressor location. Charger and air compressor to be located [#LOC]. | $280 |
| 1750-0173 | Rocker switch cover (or bezel) to be red. Location: [#LOC]. | $39 |
| 1750-0176 | Light Whelen model 70RA6FCR Super LED (4) split red/amber with chrome flanges. Horizontally mounted flashing lights on each of the interior cab door panels outboard mounted. Wire through door switch. | $1,624 |
| 1750-0177 | Receptacle inlet 30amp twist lock with a [#COL] cover. Location: [#LOC]. | $559 |
| 1750-0178 | Windshield fan 8". Location: rear facing mounted on driver side 3x3 post. | $191 |
| 1750-0179 | Dome light red/white Incandescent for tiller cab. White light wire through door and light assembly switch. Red light through light assembly switch. | $144 |
| 1750-0180 | Dome light red/white LED for tiller cab. White light wire through door and light assembly switch. Red light through light assembly switch. | $205 |
| 1750-0181 | Dome light red/white 4" incandescent for tiller cab. White light wired thru door and light assembly mounted rocker switch. Red light thru light assembly mounted rocker switch. | $149 |
| 1750-0182 | Dome light red/white 4" LED for tiller cab. White light wired through door and light assembly mounted rocker switch. Red light through light assembly mounted rocker switch. | $383 |
| 1750-0186 | Dome Lts Red/White Incandescent additional. White light wire through door and light assembly mounted switch. Red light through light assembly mounted switch. Location: Centered rear of cab. | $145 |
| 1750-0187 | Auto drain Kussmaul model 091-9-089 120V. For use with air compressor 091-9B-1 only. | $209 |
| 1750-0188 | DPF regeneration override switch. | $204 |
| 1750-0192 | Aerial engagement switch in cab to have a red cover (or bezel). | $39 |
| 1750-0193 | Oil level sensor light in cab to indicate drop in hydraulic reservoir oil level. Interlock w/parking brake tag to read "Power Steering System Failure Stop Vehicle". | $142 |
| 1750-0194 | Dome Lts Red/White LED additional (PR). White light wire through door and light assembly switch. Red light through light assembly switch. Location: Rear crew area. | $409 |
| 1750-0195 | Cab dome lts red/white (2 red/white 2 white) 4" incandescent. White light wired thru door and light assembly mounted rocker switch. Red light thru light assembly mounted rocker switch. Red/white located in front of cab white located at rear cab doors. | $588 |
| 1750-0196 | Battery charger Newmar model PT-80 80amp. | $3,544 |
| 1750-0197 | Clamshell controller mounted on driver's side of engine cover for the air horns. | $126 |
| 1750-0203 | Special location for battery charger indicator. Location: [#LOC]. | $112 |
| 1750-0205 | Handheld flashlight orange Streamlight Vulcan flashlight with vehicle mount system. Location: [#LOC]. | $259 |
| 1750-0206 | Clamshell controller mounted on officer's side cab dash for Q2B and air horns. | $126 |
| 1750-0208 | Light Whelen model PSA00FAR LED (4) amber. Horizontal mounted flashing strip light on each of the interior lower cab door panels outboard. Wire through door switch. | $796 |
| 1750-0209 | Clamshell controller mounted on on officer's side of engine cover (knee height) for Q2B. | $126 |
| 1750-0214 | Mount customer supplied GPS antenna on cab roof. Location: [#LOC]. | $177 |
| 1750-0215 | Turn signal Whelen M6 LED arrow amber pair located [#LOC]. | $655 |
| 1750-0217 | Conduit flexible .375" for radio installation driver dash to center overhead console. | $304 |
| 1750-0218 | Gauge engine oil temp in driver overhead console. | $499 |
| 1750-0219 | Keyed battery/ignition switch. | $135 |
| 1750-0221 | Xenon HID cab headlights. CIIX and TyphoonX only. | $1,795 |
| 1750-0222 | 12 volt electrical outlet in the cab wired through ignition. Location: [#LOC]. | $61 |
| 1750-0223 | Control push button switch center electrical cover offset to officer side for air horns | $96 |
| 1750-0226 | Whelen 4'' round LED amber jacks down light IPOS. Model 20A00FCR light with 2FLANGEC bezel. | $189 |
| 1750-0227 | Mount customer supplied antenna on cab roof. Location: (1) shark fin centered on cab roof between a/c condensor and storage box terminating below officer seat. | $177 |

| Item No. | Description | |
|---|---|---|
| 1750-0231 | Light Whelen model PSA00FAR LED (3) amber. Horizontally mounted flashing strip light on each of the interior lower cab door panels outboard. Wire through door switch. | $596 |
| 1750-0234 | Digital speedometer officer's side overhead. | $581 |
| 1750-0250 | Dome Lt Red/White LED additional (EA). White light wire through door and light assembly switch. Red light through light assembly switch. Location: Rear facing engine cover seat(s). | $205 |
| 1750-0252 | Kussmaul mounting plate model 091-9H for 12v air compressor. | $83 |
| 1750-0256 | Auto eject block heater receptacle inlet 15amp with a [#COL] cover. Location: [#LOC]. | $524 |
| 1750-0257 | Aerial PTO hourmeter in cab IPOS. | $137 |
| 1750-0258 | Antenna base Tessco P/N 90942 (NMO Motorola Style - also called MATM style) on cab roof package (6). Location: (3) driver side between a/c condensor and storage box terminating below officer seat and (3) officer side between a/c condensor and storage box with (1) terminating in center overhead and (2) terminating in officer dash. See customer layout drawing on file with sales. | $559 |
| 1750-0260 | Battery charger Super Smart 20 amp with 120V Kussmaul HP air compressor. | $1,676 |
| 1750-0261 | Clamshell controller mounted on on officer's side cab dash at "A" post for Whelen Howler. | $126 |
| 1750-0262 | Auto transfer switch 120 volt. Includes 8 place breaker box. Allows interior receptacles to be powered by either shore power or generator. Ship to VanMor for installation. | $766 |
| 1750-0263 | Radio speakers pair. Locate each side rear cab ceiling. Wiring to terminate in center dash for customer supplied radio(s). | $276 |
| 1750-0264 | Block/oil pan heater on/off 110V switch. Location: inside driver door; rear of seat. | $174 |
| 1750-0267 | Battery charger Kussmaul 4000 45 amp with air compressor. | $2,451 |
| 1750-0268 | Battery charger Kussmaul 40 amp model 1200 with 120V HP air compressor. | $2,441 |
| 1750-0269 | 12ga dedicated ground wire to center overhead console. | $80 |
| 1750-0270 | Control push-button switch officer side (side facing) of center electrical cover for Q2B siren. | $96 |
| 1750-0271 | Control push-button switch officer side (side facing) of center electrical cover for air horns. | $96 |
| 1750-0275 | Receptacle inlet 30amp household with a [#COL] cover. Location: [#LOC]. | $559 |
| 1750-0276 | Battery charger Newmar model EV-40-12-1 40amp. | $1,470 |
| 1750-0278 | Light Whelen LED strip model PSC0CDCR to illuminate cab floor. Horizontally mounted on seat riser. Wire through door switch. Location: [#LOC] | $155 |
| 1750-0281 | Safety Vision Safedrive Mini DVR. Locate officer side of center windshield post up high. | $1,959 |
| 1750-0283 | LED cab headlights. TyphoonX CIIX and QST2 only. | $1,590 |
| 1750-0284 | Switch additional guarded toggle. Location and Function: [#LOC]. | $204 |
| 1750-0285 | The chassis shall be pre-wired for installation of tire chains. Includes guarded toggle switch located on the driver side diagnostic panel. | $428 |
| 1750-0286 | Receptacle block heater inlet 20amp with a [#COL] cover. Location: [#LOC]. | $292 |
| 1750-0289 | Battery charger Kussmaul 4000 45 amp | $1,575 |
| 1750-0300 | Radio AM/FM/CD/weather band w/auxiliary input port located [#LOC]. | $712 |
| 1750-0302 | Control push-button switch officer side ovherhead for Rumbler. | $96 |
| 1750-0303 | Aerial engagement switch to be guarded style located on the panel outboard of the steering wheel below dash. | $223 |
| 1750-0304 | Radio Pioneer DEH-X 7500HD AM/FM CD/USB located [#LOC]. | $981 |
| 1750-0305 | Dome lts Whelen red/white 4" LED (6). Lights to be located two front and four rear. White light wired through door and light assembly mounted rocker switch. Red light through light assembly mounted rocker switch. | $3,002 |
| 1750-0306 | Radio speakers additional pair Pioneer TS-G1341R. Locate each side rear cab ceiling. | $350 |
| 1750-0310 | Clamshell controller mounted on officer's side of engine cover for Federal Signal Rumbler. | $126 |
| 1750-0314 | Battery charger Kussmaul model 12 HO PIM 20 amp. Includes model 091-189-12 indicator located adjacent to inlet receptacle. | $1,414 |
| 1750-0316 | Switch horn button two position DOT/Rumbler. | $101 |
| 1750-0319 | Control push-button switch officer side (side facing) of center electrical cover for EQ2B siren. | $96 |
| 1750-0322 | Light Whelen model PSC00FCR LED (4) clear. Vertically mounted flashing strip light with 14 flash patterns including steady burn shall be mounted on the lower cab step well areas (interior). The front doors shall have (1) strip light shall be located on forward step well wall (both sides). The rear doors shall have (1) strip light shall be located on rear step well wall (both sides). Wire through door switch. | $796 |
| 1750-0323 | Engine tunnel to be fitted with a position activation switch to activate engine compartment lighting when not in the fully closed position. | $503 |
| 1750-0324 | Air compressor Kussmaul model 091-9 12V. | $949 |
| 1750-0325 | Pigtail minimum of 18" of wire for service of the battery charger and/or air compressor. | $49 |
| 1750-0326 | Auto transfer switch 120 volt. Includes 2 place breaker box. Allows interior receptacles to be powered by either shore power or generator. | $745 |

| Item No. | Description | |
|---|---|---|
| 1750-0327 | Switch momentary to activate heat option contained in mirrors for 10 minutes. The heat will automatically turn itself off after the heat activation time period (10 minutes) has expired. | $196 |
| 1750-0328 | Auto transfer switch 120 volt. Includes 8 place breaker box. Allows interior receptacles to be powered by either shore power or inverter. | $766 |
| 1750-0329 | Cornering light relay circuits for lights in center of rear tandem wheel well. Includes (2) relays. Requires scene light option. Interlocked with park brake. | $415 |
| 1750-0330 | Dome Lt Red/White LED additional (EA). White light wire through door and light assembly switch. Red light through light assembly switch. Location: centered between rear cab dome lights. | $205 |
| 1750-0331 | Control push-button switch driver side (side facing) of center electrical cover for EQ2B siren. | $96 |
| 1750-0332 | Dome lights Red/White incandescent. Package includes two lights mounted in the front and two mounted in the rear of the cab Trucklite 80 series with push style on/off button (may be used with Ford chassis). White light wire through door and light assembly mounted switch. Red light through light assembly mounted switch. | $564 |
| 1750-0333 | Dome lights White incandescent. Package includes two lights mounted in the front and two mounted in the rear of the cab Trucklite 80 series with push style on/off button (may be used with Ford chassis). Lights wire through door and light assembly mounted switch. | $564 |
| 1750-0334 | Dome lights White incandescent. Package includes two lights mounted in the front of the cab Trucklite 80 series with push style on/off button (may be used with Ford chassis). Lights wire through door and light assembly mounted switch. | $282 |
| 1750-0335 | Metric speedometer in English dominant main cab gauge cluster. | $2,168 |
| 1750-0336 | Whelen traffic advisor control head (model TRACTRL1A) shall be mounted in the center overhead panel. The control head shall be wired to the main power switching circuit. There shall be a 50' control cable (model TAPVC50) ran from the control head to the rear of the body coiled up for dealer supplied and installed traffic advisor. | $1,014 |
| 1750-0337 | Garmin GSP 18X USB. May be mounted at E-ONE discretion on the cab roof within reach of cab 12VDC hot outlet(s). | $248 |
| 1750-0338 | Radio Pioneer DEH-3300UB AM/FM CD/USB (with a pair of TS-D1302R speakers) located [#LOC]. | $981 |
| 1750-0339 | Radio speakers additional pair Pioneer TS-D1302R. Locate each side rear cab ceiling. | $350 |
| 1750-0340 | Control push-button switch officer side (side facing) of center electrical cover for EQ2B siren brake. | $96 |
| 1750-0341 | Transverse cab compartment dome light package (4) LED. Trucklite 44 series. | $582 |
| 1750-0342 | Battery charger Kussmaul model 12 HO PIM 20 amp. Includes model 091-189-12 indicator located behind driver's door adjacent to exterior handrail. | $1,414 |
| 1750-0343 | Battery charger E-ONE LPC 20. 120 volt inlet 20 amp output. | $608 |
| 1750-0344 | Battery charger E-ONE LPC 40. 120 volt inlet 40 amp output. | $924 |
| 1750-0350 | Install customer supplied radio/intercom (ea). Loc: [#LOC]. | $505 |
| 1750-0351 | Kussmaul solar power charging system; model 092-1220-1. Location: Center rear cab roof. | $2,385 |
| 1750-0353 | Dome Lts Red/White LED. Package includes two lights mounted in the front and three mounted in the rear of the cab. White light wired through door and light assembly switch. Red light through light assembly switch. | $1,039 |
| 1750-0355 | Each 110 volt cab receptacle shall have a dedicated breaker within the breaker box. This is to provide each cab mounted receptacle (single outlet duplex etc. as applicable) with its own isolated circuit. | $269 |
| 1750-0356 | Radio speaker (1). Locate center rear ceiling. Wiring to terminate in center overhead console for customer supplied radio. | $140 |
| 1750-0360 | Auto-Eject receptacle inlet 30 amp 240 volt located [#LOC] and with a [#COL] cover. | $843 |
| 1750-0368 | Dome Lts Red/White 4" LED (6). Lights to be located two front and four rear. White light wired through door and light assembly mounted rocker switch. Red light through light assembly mounted rocker switch. | $2,280 |
| 1750-0369 | Guard. On-Spot activation switch shall have a red flip up safety guard. The switch shall de located on the driver side overhead panel offset to the officer side as far as possible. | $52 |
| 1750-0370 | Engine hourmeter in cab. | $159 |
| 1750-0372 | 12 VDC (or 24VDC) electrical outlet in the cab wired battery hot with 14AWG at each seated position. Outlets are shared within the same circuit. | $244 |
| 1750-0374 | Light Whelen model PSB00FBR LED (4) blue. Horizontally mounted flashing strip light on each of the inside lower cab door panels. Wire through door switch. | $796 |
| 1750-0375 | Switch console mounted to the driver side engine cover. | $160 |
| 1750-0377 | Additional 4" white LED dome lights (PR) for rear of cab wired battery hot to a 15 min. timer switch. Locate switch on interior officer side rear side wall just above floor level. | $483 |

| Item No. | Description | |
|---|---|---|
| 1750-0378 | Switch momentary to illuminate cab dome lighting for 15 minutes. The lights will automatically turn themselves off after the activation time period (15 minutes) has expired. Locate switch on interior officer side rear side wall just above floor level. | $252 |
| 1750-0381 | Cornering light relay circuits for cab/body lights on side of unit. Includes (2) relays. Interlocked with park brake. | $415 |
| 1750-0383 | Radio Jensen JHD1630B AM/FM/WB (with a pair of Polk Audio DXi525 5.25" speakers) located [#LOC]. | $1,092 |
| 1750-0385 | Cab step lighting package. Includes (2) EON LED lights per side IPOS. (1) Light per door mounted in the cab step well area | $252 |
| 1750-0389 | Radio speakers pair. Locate (1) above officer and (1) centered in rear crew cab area. Wiring to terminate (1) center dash (1) center overhead for customer supplied radio(s). | $276 |
| 1750-0392 | Battery charger Kussmaul 75 amp model 091-149-12 with 091-9 air compressor. | $3,541 |
| 1750-0393 | Switch secondary braking three position Jacobs/Off/Telma. Jacobs Brake top position off center Telma bottom position. | $209 |
| 1750-0395 | Light EON LED to illuminate cab floor(EA). Horizontally mounted on seat riser. Wire through door switch. Location: [#LOC]. | $155 |
| 1750-0396 | Control push-button switch on officer's overhead for Q2B siren brake. | $96 |
| 1750-0398 | Mount customer supplied GPS antenna on interior of cab. Location will be per antenna manufacturers' recommendation. | $177 |
| 1750-0399 | Control push-button switch driver side of center dash upper tier for Q2B siren. | $96 |
| 1750-0401 | Cornering light relay circuits for only the side facing gravel shield lights. Includes (2) relays. Requires scene light option. Interlocked with park brake. | $415 |
| 1750-0404 | Dome lights Whelen red/white 6" Super-LED surface mounted interior lights. Four (4) model 60CREGCS lights to be located two front and two rear. White light wired through door and light assembly. Red light through switch mounted on light assembly. | $1,347 |
| 1750-0405 | Battery charger Kussmual model 091-200-12-194-WT-RD. 120 Volt 40 Amp output includes water tight display mounted adjacent to inlet. | $1,772 |
| 1750-0406 | The air horn(s) shall not be included within the Multiplex system (separate switching from Multiplex display required). | $390 |
| 1750-0407 | Control push-button switch for Rumbler. Location [#LOC]. | $96 |
| 1750-0410 | Switch additional through multiplex display. Function: [#LOC]. | $91 |
| 1750-0411 | Dome Lts Red/White Whelen model 60CREGCS LED. Package includes two lights mounted in the front and four mounted in the rear of the cab. White light wired through door and light assembly switch. Red light through light assembly switch. | $1,678 |
| 1750-0412 | Kussmaul digital battery display model 091-194-IND-WT-RD in place of standard. | $347 |
| 1750-0414 | Warning light Whelen M6R series Linear Super LED (PR) red. Location: interior of canopy doors wired through each door ajar switch only. | $718 |
| 1750-0415 | Dome Lt Red/White LED additional (EA). White light wire through door and light assembly switch. Red light through light assembly switch. Location: Below forward vista medical cabinet. | $205 |
| 1750-0417 | Flexible 1" conduit with connectors. Location: radio cabinet to center of dash. | $304 |
| 1750-0419 | Turn signal TecNiq LED amber strip (PR) located in center of quad headlight bezel (QST2 only). | $109 |
| 1750-0420 | Daytime Running Light TecNiq LED strip (PR) located in center of quad headlight bezel (QST2 only). | $118 |
| 1750-0423 | Programming instructions for auxiliary switch 1 on steering wheel switch pod. Switch function: [#LOC]. | $91 |
| 1750-0424 | Programming instructions for auxiliary switch 2 on steering wheel switch pod. Switch function: [#LOC]. | $91 |
| 1750-0425 | Programming instructions for auxiliary switch 3 on steering wheel switch pod. Switch function: [#LOC]. | $91 |
| 1750-0426 | Turn signal Weldon LED amber pair located [#LOC]. | $547 |
| 1750-0428 | Interior courtesy red LED light package. Includes driver / officer side engine cover lighting center dash wash lights and front / rear floor lights. | $365 |
| 1750-0429 | Dual USB charging ports in the cab wired battery hot. Location: [#LOC]. | $70 |
| 1750-0431 | Conduit flexible 1" for radio installation center of dash to area behind officer's seat. | $304 |
| 1750-0433 | Battery charger Kussmaul LPC 80. 120 volt inlet 80 amp output. | $1,696 |
| 1750-0434 | Radio cabinet ventilation fan (PR). Location: ceiling of radio cabinet wired through ignition. | $220 |
| 1750-0436 | Dome Lt Red/White LED additional (EA). White light wire through door and light assembly switch. Red light through light assembly switch. Location: center between front cab seats. | $205 |
| 1750-0437 | The chassis shall be pre-wired for installation of tire chains. Includes guarded toggle switch located on the center dash panel. | $428 |

| Item No. | Description | |
|---|---|---|
| 1750-0438 | Radio AM/FM CD with weather band located [#LOC]. Includes speakers in ceiling to rear of driver/officer. | $815 |
| 1750-0439 | Dome Lt Red/White Whelen model 60CREGCS LED additional (EA). White light wired through door and light assembly switch. Red light through light assembly switch. Location: center rear crew cab ceiling. | $338 |
| 1750-0440 | Switch horn button three position DOT/air horn/electronic siren. Wired through multiplex display screen. | $204 |
| 1750-0441 | Battery charger Kussmaul model EV40 40 amp. | $1,540 |
| 1750-0442 | Light EON LED (EA). Horizontally mounted in seat riser. Wire through door switch. Location: officer seat riser. | $155 |
| 1750-0445 | Clamshell controller mounted on center console offset to officer side for air horns. | $126 |
| 1750-0447 | Dome Lts Red/White Whelen model 60CREGCS LED. Package includes two lights mounted in the front and two mounted in the rear of the cab. White light wired through door and light assembly switch. Red light through light assembly switch. | $1,119 |
| 1750-0448 | Light Whelen model PSRASXCR LED (4) red/amber. Horizontally mounted flashing strip light on each of the inside lower cab door panels. Wire through door switch. | $828 |
| 1750-0449 | Momentary DPF regeneration override switch. | $204 |
| 1750-0451 | Steering wheel with switch pods IPOS. Includes wiper functions master warning sw air horn sw aux brake on/off and (3) aux switches. For use only with Typhoon and CII NOT equipped with 4Front. (Requires seperate programming options to activate aux switches) | $915 |
| 1750-0452 | Radio speakers (3). Locate officer ceiling and each side rear cab ceiling. Wiring to terminate in center overhead console for customer supplied radio(s). | $473 |
| 1750-0453 | Auto transfer switch 120 volt. Includes 12 place breaker box. Allows interior receptacles to be powered by either shore power or generator. | $806 |
| 1750-0454 | Courtesy light for driver and officer located on front of risers wired through marker lights. Whelen model 0SR00SCR light. | $256 |
| 1750-0455 | Block heater connector; 15 amp male. Location: driver side under front bumper adjacent to frame rail. | $102 |
| 1750-0457 | Turn signal Whelen 600 LED amber arrow pair with black bezel located [#LOC]. | $700 |
| 1750-0458 | Quad bezels (4) black ipos. | $257 |
| 1750-0460 | Light Whelen model PSR00FRR LED (4) red. Horizontally mounted flashing strip light on each of the inside cab door panels below the windows. Wire through door switch. | $796 |
| 1750-0462 | Turn signal Whelen M6 LED arrow amber pair with clear lenses located [#LOC]. | $655 |
| 1750-0464 | Dome Lt Red/White Whelen model 60CREGCS LED. One (1) light centered between driver/officer in the ceiling. White light wired through door and light assembly switch. Red light through light assembly switch. | $338 |
| 1750-0466 | DEF level gauge adjacent to tank fill area. | $351 |
| 1750-0468 | Relocate driver master power window controls and officer front window control to center upper tier. | $416 |
| 1750-0470 | Relocate driver master power window controls to cab dash upper tier offset to driver. | $416 |
| 1750-0471 | Auto-Eject receptacle inlet 20 amp located rear of body driver side with a Yellow cover. Receptacle wired to roof top A.C. | $577 |
| 1750-0474 | Control push button switch center dash upper tier offset to officer side for air horns | $96 |
| 1750-0475 | Control push-button switch center dash upper tier offset to officer for Q2B. | $96 |
| 1750-0476 | Speaker wire for dealer/customer supplied radio/speaker. Route wire from driver side 3x3 up high to center dash. | $149 |
| 1750-0477 | Clamshell controller mounted on officer's side of engine cover for Q2B brake. | $126 |
| 1750-0478 | Battery charger Kussmaul model 091-216-40/20 40 amp battery charger / 20 amp battery saver. | $2,004 |
| 1750-0479 | On-Spot activation switch to have a red cover (or bezel). | $39 |
| 1750-0480 | Auto-Eject dual receptacle inlet; 30 amp 120V with air auto eject located [#LOC] with a [#COL] cover. | $1,519 |
| 1750-0481 | Auto-Eject receptacle inlet 20 amp wired to roof top AC located [#LOC] with a [#COL] cover. | $577 |
| 1750-0482 | Control push-button switch officer switch panel for Q2B siren. | $96 |
| 1750-0483 | Control push-button switch on officer's switch panel for Q2B siren brake. | $96 |
| 1750-0484 | Control push-button switch officer switch panel for siren. | $96 |
| 1750-0485 | Control push-button switch officer switch panel for air horns. | $96 |
| 1750-0486 | Battery charger Kussmaul model Pump Plus 1200 40 amp. | $1,442 |
| 1750-0488 | Ammeter gauge in cab 0-300 amps through multiplex display. | $762 |
| 1750-0489 | Air compressor to be located floor mounted in officer side wheel well medical cabinet. Includes grating over front for protection. | $124 |
| 1750-0490 | Lateral "G" Alert system with Audible and Visual warnings. | $4,296 |

| Item No. | Description | |
|---|---|---|
| 1750-0491 | The chassis shall be pre-wired for installation of tire chains. Includes 12 volt rocker lock-out/safety style switch. | $542 |
| 1750-0492 | Interlock to position front bumper lid for cab tilting. | $279 |
| 1750-0494 | Mobility Pro GPS system model BT5830V2-AT with model ANT-NA520-ABC008 antenna. | $1,735 |
| 1750-0495 | Kussmaul bluetooth module model 091-226 wired to cab speakers. Located in cab accessible to driver. | $348 |
| 1750-0497 | Additional marker light TecNiq amber LED strip (PR) located in center of quad headlight bezel (QST2 only). | $118 |
| 1750-0498 | Aerial PTO switch to have a red cover (or bezel). | $39 |
| 1750-0499 | Ammeter gauge in cab 0-400 amps through multiplex display. | $762 |
| 1750-0500 | Relocate driver master power window controls center upper tier offset to driver and officer front window control to center upper tier offset to officer. | $416 |
| 1750-0501 | Clamshell controller mounted on on driver's side of engine cover for electronic siren. | $126 |
| 1750-0503 | Whelen model 01-066A584152 red courtesy light with 45 degree bezel. Locate on the driver ceiling to illuminate overhead switches. Includes switch adjacent to light. | $332 |
| 1750-0504 | Radio Delphi AM/FM/Weatherband with CD and aux input and USB port. Located [#LOC]. | $815 |
| 1750-0505 | Dual DPF regeneration override switches. (1) controls manual generation; (1) controls inhibit. | $406 |
| 1750-0506 | Radio AM/FM CD Kenwood model KDC-BT762HD located [#LOC]. | $922 |
| 1750-0507 | The chassis shall be pre-wired for installation of tire chains. Includes guarded toggle switch located on the driver overhead console. | $428 |
| 1750-0509 | Battery charger Iota model DLS-75 75 amp. | $761 |
| 1750-0512 | Windshield fans RoadPro Tornado pair. Location: centered below overhead console. | $378 |
| 1750-0514 | Peterson LED cab headlights. | $981 |
| 1750-0516 | Auto drain Kussmaul model 091-9-086 12V. For use with air compressor 091-9-12V only. | $209 |
| 1750-0519 | Sirius cab headlights. TyphoonX CIIX and QST2 only. | $156 |
| 1750-0522 | Flexible 2" conduit with connectors. Location: Center cab dash to radio cabinet. | $371 |
| 1750-0523 | Switch for driver controlled differential lock to be momentary IPOS (Axle lock engages only when switch is pressed and held). | $126 |
| 1750-0526 | Dome Lts Red/White Incandescent. Package includes two lights mounted in the front of the cab. White light wire through door and light assembly mounted switch. Red light through light assembly mounted switch. | $326 |
| 1750-0527 | Light Whelen model PSR00FRR LED (2) red. Horizontal mounted flashing strip light on each of the inside lower cab door panels. Wire through door switch. | $796 |
| 1750-0529 | Air compressor Kussmaul model 091-9-12V-HP. | $1,054 |
| 1750-0530 | Radio speakers (4). Locate (1) each side front and rear cab ceiling. Wiring to terminate in center lower dash for customer supplied radio(s). | $630 |
| 1750-0531 | Control push-button switch center lower dash for Q2B siren. | $96 |
| 1750-0532 | Control push-button switch on center lower dash for Q2B siren brake. | $96 |
| 1750-0533 | Flexible 3/4" conduit with connectors. Location: officer side overhead to behind officer seat. | $443 |
| 1750-0535 | Clamshell controller mounted on officer's side switch panel for Q2B brake. | $126 |
| 1750-0536 | Clamshell controller mounted on officer's side switch panel for Q2B. | $126 |
| 1750-0538 | Flexible 1" conduit with connectors. Location: Center cab dash to radio cabinet. | $311 |
| 1750-0540 | Dual USB charging ports in the cab wired through ignition. Location: [#LOC]. | $70 |
| 1750-0541 | Kussmaul bluetooth module model 091-226 wired to cab speakers. Located in officer overhead. | $348 |
| 1750-0542 | PharmGuard dual mode power supply; 110V shoreline and 12V power. | $520 |
| 1750-0543 | Zoll RescueNet Road Safety driver monitoring system. | $10,169 |
| 1750-0544 | Control push-button switch on center console for Q2B siren. | $96 |
| 1750-0547 | Conduit flexible 1" from center cab dash to upper forward wall of L2. | $443 |
| 1750-0548 | Flexible 3/4" conduit with connectors. Location: officer side overhead to officer sid of forward vista medical cabinet . | $443 |
| 1800-0001 | Cooling for EGR engines. Includes charge air cooler. | $6,418 |
| 1800-0003 | Coolant System Overflow Recovery System CRS-150 | $558 |
| 1800-0005 | Cooling system for use with Cyclone II X Typhoon X and Quest chassis. Includes coolant recovery system. | $6,418 |
| 1800-0006 | Remote coolant filter for engine cooling system (Cummins ISC and ISL engines only). | $550 |
| 1800-0013 | Cooling system for use with Cyclone II X Typhoon X and Quest chassis. For use with 2010 / 2013 / 2016 EPA engines. Includes coolant recovery system. | $7,232 |
| 1800-0020 | Cooling system for 98 EPA non-EGR engines. Includes charge air cooler. | $6,418 |
| 1800-0023 | Cooling for Pre-2004 export engines. Includes charge air cooler. | $6,418 |
| 1800-0024 | Ball valve drain for radiator ipo petcock valve. | $112 |

| Item No. | Description | |
|---|---|---|
| 1800-0026 | Plug shall be installed in drain of radiator IPO petcock valve. | $67 |
| 1800-0027 | Cummins Compleat (blue) 50/50 pre-mixed antifreeze ipos. | $283 |
| 1800-0029 | Engine cooler. E-ONE chassis only. Requires control option for pump panel. | $454 |
| 1800-0030 | Shutoff valve (1) each side of optional coolant filter. | $137 |
| **AERIAL BODY** | | |
| 3080-0000 | Body aerial 95/CR100 CII/Quest medium cab without pump. 100" wide with L and R extended rescue style high sides and rear side staircases. 61" high body for 11'-10" OAH. | $57,976 |
| 3080-0001 | Body aerial 95/CR100 with center hose bed. Configured for midship pump and 300 tank. 100" wide with L and R extended rescue style high sides and double beavertails. 63" high body for 12'-1" OAH | $68,393 |
| 3080-0002 | Body aerial Bronto RLP. Includes full length hosebed and pocket style flop down steps at each staircase. The doors on compts next to fwd outriggers to match the outrigger covers. The doors on small compts over forward tandem wheel to match wheelwell. The doors at rear of body on the lower aerial control panel compt to match rear body finish. | $53,230 |
| 3080-0003 | Body aerial Bronto RLP. Includes deep upper right side compartment short hosebed and pocket style flop down steps at each staircase. The doors on compts next to fwd outriggers to match the outrigger covers. The doors on small compts over forward tandem wheel to match wheelwell. The doors at rear of body on the lower aerial control panel compt to match rear body finish. | $54,295 |
| 3080-0004 | Body aerial HM100/110 with center hose bed. Configured for midship pump and 500 tank. 100" wide with L and R extended rescue style high sides and double beavertails. 67" high body for 11'-6" OAH. | $65,162 |
| 3080-0005 | Body aerial HM100/110 CII without pump. 100" wide with L and R extended rescue style high sides and double beavertails. 67.25" high body for 11'-5" OAH. | $58,113 |
| 3080-0006 | Body aerial HP100 CII without pump. 100" wide tandem axle. (220" WB medium cab / 230" WB long cab). Includes L and R extended rescue style high sides and double beavertails. | $60,207 |
| 3080-0007 | Body aerial HP100 with center hose bed. Configured for midship pump and 500 tank. 100" wide body with (230" wheelbase medium cab/240" wheelbase long cab) tandem axle. Includes L and R extended rescue style high sides and double beavertails. | $69,088 |
| 3080-0008 | Body aerial HP75 / HP78 with center hose bed. Configured for midship pump and 400-500 tank. Single axle 100" wide body. Includes L and R rescue style high sides. The rear turntable access door to match the rear body finish. | $44,135 |
| 3080-0010 | Body aerial HP75 / HP78 SideStacker Quest / CII / Typhoon with pump. Single axle. Includes pocket style drop down step at left rear staircase. The rear access doors to match the rear body finish. | $48,934 |
| 3080-0011 | Body aerial Bronto Q118 with pump. Includes pocket style flop down steps at each staircase. Rear electrical compartment lift-up door to match rear body finish. | $51,705 |
| 3080-0027 | Body aerial RLP without pump. Includes pocket style flop down steps at each staircase. The doors on compts next to fwd outriggers to match the outrigger covers. The doors on small compts over forward tandem wheel to match wheelwell. The doors at rear of body on the lower aerial control panel compt to match rear body finish. | $51,711 |
| 3080-0030 | Tiller body without pump. Includes tool compartment at rear of body below ladder tunnel and staircases with pocket style flop down steps each side of tractor body. | $63,443 |
| 3080-0031 | HP95 MidMount front body with pump. | $20,963 |
| 3080-0032 | HP95 MidMount front body without pump. | $21,004 |
| 3080-0033 | HP95 MidMount front body without pump low travel height (for use with DPF / SCR aftertreatment). | $20,013 |
| 3080-0034 | HP95 MidMount center body with pump and 300g tank. | $17,884 |
| 3080-0035 | HP95 MidMount center body with pump and 500g tank. | $17,884 |
| 3080-0036 | HP95 MidMount center body with pump and 300g tank. Includes optional officer's side compartment above rear wheels. | $18,156 |
| 3080-0037 | HP95 MidMount center body with pump and 500g tank. Includes optional officer's side compartment above rear wheels. | $18,156 |
| 3080-0038 | HP95 MidMount center body without tank. | $16,930 |
| 3080-0039 | HP95 MidMount center body without pump with wide ladder tunnel. | $18,190 |
| 3080-0040 | HP95 MidMount center body without pump low travel. | $17,822 |
| 3080-0041 | HP95 MidMount rear body with hosebed. | $25,036 |
| 3080-0042 | HP95 MidMount rear body without hosebed. | $26,130 |
| 3080-0043 | HP95 MidMount rear body with narrow hosebed and shallow rescue style officer's side compartments. | $27,058 |
| 3080-0044 | HP95 MidMount rear body with wide ladder tunnel and no hosebed. | $26,130 |

| Item No. | Description | |
|---|---|---|
| 3080-0045 | HP95 MidMount rear body without hosebed low travel. | $24,680 |
| 3080-0046 | HP95 MidMount center body with pump and 300g tank. Includes optional officer's side shallow compartment above rear wheels. | $18,804 |
| 3080-0047 | HP95 MidMount center body with pump and 500g tank. Includes optional officer's side shallow compartment above rear wheels. | $18,804 |
| 3080-0057 | Body aerial HP100 Platform without pump. 100" wide with L and R extended rescue style high sides seperate rear side compartments and rear side staircases. The door on small compt next to rear outrigger to match wheelwell. | $57,976 |
| 3080-0059 | Body aerial HM100 CII without pump - Memphis. Includes left side traditional style extended high sides combined pltwrk in L6/L7 and L8/L9 half right side with DP panels above and double beavertails. Trans floor 3/16 Dia Plt others 3/16 SM Plt. Manual cab tilt in R1. 69.25" high body for 11'-7" OAH. | $58,770 |
| 3080-0064 | Body aerial HP75 / HP78 SideStacker Quest / CII / Typhoon with pump. Single axle. Includes extended R1 compt and pocket style drop down step at left rear staircase. The rear access doors to match the rear body finish. | $48,934 |
| 3080-0065 | Body aerial HP100 with center hose bed. Configured for midship pump and 300 tall tank. 100" wide body with 230" wheelbase tandem axle. Includes L and R extended rescue style high sides single right side hose chute and double beavertails. | $71,532 |
| 3080-0066 | Body aerial HP75 / HP78 with center hose bed. Configured for midship pump and 400-500 tank. Single axle 100" wide body. Includes L and R rescue style extended high sides. The rear turntable access door to match the rear body finish. | $46,469 |
| 3080-0067 | Body aerial HP75 / HP78 with combined extended height front side compts beavertail compts combined w/rear side compts and center hose bed. Configured for midship pump and 400-500 tank. Single axle 100'' wide body. The rear turntable access door to match the rear body finish. | $50,231 |
| 3080-0069 | Body aerial HP75 / HP78 SideStacker Quest / CII / Typhoon with pump. Single axle. Right side ahead of rear axle to have two seperate compts 24"w R1 and 32"w R2. Includes pocket style drop down step at left rear staircase. The rear access doors to match the rear body finish. | $49,885 |
| 3080-0070 | Body aerial 95/CR100 CII/Quest medium cab without pump. 100" wide with Left extended rescue style high side right half side with recessed area above for horizontal ladder storage and rear side staircases. 61" high body for 11'-10" OAH. | $61,775 |
| 3080-0071 | Body aerial 95/CR100 CII/Quest long cab without pump. 100" wide with L and R extended rescue style high sides and rear side staircases. 61" high body for 11'-10" OAH. | $57,976 |
| 3080-0072 | Tiller body - without pump. Includes tractor body w/12" wide compts (140" WB w/58" cab) trailer body with raised compts (L2/R2-L6/R6) 50" wide ladder tunnel tool compartment at rear of body below ladder tunnel and staircases with pocket style flop down steps each side of tractor body. | $66,353 |
| 3080-0073 | Body aerial HP100 CII without pump. 100" wide tandem axle. (230" WB medium cab). Includes L and R extended rescue style high sides and double beavertails. | $63,176 |
| 3080-0074 | Body aerial HP100 Platform 250" WB 67.5/68 cab without pump. 100" wide with L and R extended rescue style high sides seperate rear side compartments (tall compartment to be ahead of outrigger) and rear side staircases. The door on small compt to rear of rear outrigger to match wheelwell. | $57,395 |
| 3080-0075 | Tiller body - without pump. Includes tractor body w/22"w compts (150" WB w/58" cab) raised trailer body (L2/L3/L4/L5/L6 R2/R3/R4/R5/R6 50" wide ladder tunnel tool compartment at rear of body below ladder tunnel and staircases with pocket style flop down steps each side of tractor body. | $67,518 |
| 3080-0080 | Body aerial HM100/110 CII without pump. 96" wide with L and R ladder recesses 16 wide forward upper compt (IPO trans) (3) upper storage compartments (two trans)and double beavertails. Manual cab tilt pump located low in R1 against forward wall. 61.25" high body for low OAH. Requires troughed cab. | $70,039 |
| 3080-0087 | Body aerial HM100/110 CII without pump. 96" wide with L and R ladder recesses 20 wide forward upper compt (IPO trans) (3) upper storage compartments (two trans) and double beavertails. Manual cab tilt pump located low in R1 against forward wall. 61.25" high body for low OAH. Requires troughed cab. | $70,039 |
| 3080-0096 | Body aerial HP100 Platform 250" WB 67.5/68 cab without pump. 100" wide with L and R extended rescue style high sides seperate rear side compartments (tall compartment to be rearward of outrigger) and rear side staircases. The door on small compt next to rear outrigger to match wheelwell. | $57,395 |
| 3080-0097 | HP95 MidMount front body without pump. Includes a compt on each side ahead of waterway inlet with a vert hinged double pan painted door. | $22,990 |
| 3080-0098 | HP95 MidMount rear body with wide ladder tunnel and no hosebed or staircase. | $26,130 |

| Item No. | Description | |
|---|---|---|
| 3080-0100 | Body aerial 95/CR100 CII extended aerial cab without pump (245" WB). 100" wide with L and R extended rescue style high sides and rear side staircases. 58" high body for 11'-7" +or-1" OAH. Requires troughed cab. | $62,388 |
| 3080-0143 | Body aerial HM100/110 ladder without pump (172 C/A for use with DPF/SCR aftertreatment). 100" wide with L and R extended rescue style high sides and double beavertails. 67" high body for 11'-5" OAH. | $59,216 |
| 3080-0144 | Body aerial HP100 ladder without pump (172 C/A for use with DPF/SCR aftertreatment). 100" wide tandem axle. (230" WB medium cab / 240" WB long cab). Includes L and R extended rescue style high sides and double beavertails. | $60,760 |
| 3080-0145 | Body aerial 95/CR100 medium cab without pump (187 C/A for use with DPF/SCR aftertreatment). 100" wide with L and R extended rescue style high sides and rear side staircases. 61" high body for 11'-10" OAH. | $57,976 |
| 3080-0146 | Body aerial HP100 Platform without pump (192 C/A for use with DPF/SCR aftertreatment). 100" wide with L and R extended rescue style high sides seperate rear side compartments and rear side staircases. The door on small compt next to rear outrigger to match wheelwell. | $57,976 |
| 3080-0148 | HP95 MidMount front body without pump (for use with DPF / SCR aftertreatment). | $21,004 |
| 3080-0149 | HP95 MidMount front body without pump low travel height (for use with DPF / SCR aftertreatment). | $20,013 |
| 3080-0150 | Body aerial HP75/78 with combined standard height front side compts and center hose bed. Configured for midship pump and 400-500 tank. Single axle 100'' wide body. | $46,478 |
| 3080-0151 | Body aerial 95/CR100 CII/Quest long cab without pump (177 C/A for use with DPF/SCR aftertreatment). 100" wide with L and R extended rescue style high sides and rear side staircases. 61" high body for 11'-10" OAH. | $57,976 |
| 3080-0152 | Body aerial HP100 Platform without pump. 100" wide with L and R extended rescue style high sides separate rear side compartments and rear side staircase (left side only). The door on small compt next to rear outrigger to match wheel well. | $57,976 |
| 3080-0154 | Body aerial 95/CR100 with center hose bed. Configured for 250" wheel base long cab midship pump and 300 tank. 100" wide with L and R extended rescue style high sides and double beavertails. | $68,393 |
| 3080-0155 | Body aerial HP100 with center hose bed. Configured for midship pump and 500 tank. 100" wide body with 230" wheelbase tandem axle. Includes L and R extended rescue style high sides and single access staircase at center rear of body. The rear turntable access door to match the rear body finish. | $71,295 |
| 3080-0157 | Body aerial HP100 Platform without pump. 100" wide with L and R extended rescue style high sides combined rear side compartments and rear side staircases. The doors on small compts next to rear outrigger to match wheelwell. | $57,976 |
| 3080-0158 | Body aerial HM100/110 without pump 230" wheelbase with medium cab. 100" wide with L and R extended rescue style high sides L1 hydraulic oil reservior location and double beavertails. 61" high body for low OAH. Requires troughed cab. | $65,285 |
| 3080-0159 | Body aerial HM100/110 without pump 220" wheelbase with medium cab. 100" wide with L and R extended rescue style high sides L1 hydraulic oil reservior location and double beavertails. 61" high body for 10'-11" (+or-1") OAH. Requires troughed cab. | $65,285 |
| 3080-0161 | Body aerial Bronto RLP. Includes deep upper right side compartment short hosebed 3/16" smooth plate floors and pocket style flop down steps at each staircase. The doors on compts next to fwd outriggers to match the outrigger covers. The doors on small compts over forward tandem wheel to match wheelwell. The doors at rear of body on the lower aerial control panel compt to match rear body finish. | $54,295 |
| 3080-0162 | Body aerial HM100/110 without pump 220" wheelbase with medium cab. 100" wide with L and R extended rescue style high sides L1 hydraulic oil reservoir location and double beavertails. 64" high body for 11'-3" OAH. Requires troughed cab (if applicable). | $65,285 |
| 3080-0163 | Body aerial HM100/110 without pump 220" wheelbase with medium cab. 100" wide with L and R extended rescue style high sides L1 hydraulic oil reservoir location and double beavertails. 67" high body for 11'-5" OAH. | $58,113 |
| 3080-0164 | Body aerial HP75 / HP78 SideStacker Quest / CII / Typhoon with pump. Single axle. 65" body height for low OAH applications. Includes extended R1 compt and pocket style drop down step at left rear staircase. The rear access doors to match the rear body finish. | $48,934 |

| Item No. | Description | |
|---|---|---|
| 3080-0173 | Body aerial 95/CR100/137 CII/Quest long cab without pump (177.5 C/A for use with DPF/SCR after treatment). 96" wide body. Left side to include extended rescue style high side L1/L2 recessed area for horizontal ladder storage and additional compartment to rear of ladders. Right side to be extended rescue style high side. Body includes upper transverse storage in L2/R2 upper 3/16" upper body plate work rear of body raised 4" aft of rear jack legs and rear side staircases. 61" high body for 11'-10" +or-1" OAH. | $62,654 |
| 3080-0174 | Body aerial HP100 Platform without pump. 100" wide with L and R extended rescue style high sides seperate rear side compartments and rear side staircases. Rear of body raised 4" for improved angle of departure. The door on small compt next to rear outrigger to match wheelwell. | $57,976 |
| 3080-0175 | Body aerial 95/CR100 medium cab without pump (187 C/A for use with DPF/SCR aftertreatment). 100" wide with L and R extended rescue style high sides and rear side staircases. 58" high body for 11'-7" +or-1" OAH. Requires troughed cab. | $62,388 |
| 3080-0176 | Body aerial HP100 ladder without pump (172 C/A for use with DPF/SCR aftertreatment). 100" wide tandem axle. (230" WB medium cab / 240" WB long cab). Includes L and R extended rescue style high sides provisions for L1 hydraulic reservoir and double beavertails. | $60,760 |
| 3080-0188 | HP95 MidMount center body without crosslays includes tank 3/16" smooth plate compartment floors and wide ladder tunnel. | $19,271 |
| 3080-0195 | HP95 MidMount front body with pump and 3/16" smooth plate compartment floors (for use with DPF / SCR aftertreatment). | $21,287 |
| 3080-0196 | HP95 MidMount rear body with 3/16" smooth plate compartment floors wide ladder tunnel and no hosebed or staircase. | $31,538 |
| 3080-0197 | HP95 MidMount front body with pump and 3/16" smooth plate compartment floors. | $21,287 |
| 3080-0198 | Body aerial HP75 / HP78 SideStacker Quest / CII / Typhoon with pump. Single axle. Includes 3/16" diamond plate floors for all compartments pocket style drop down step at left rear staircase. The rear access doors to match the rear body finish. | $49,150 |
| 3080-0199 | Body aerial 95/CR100 CII/Quest medium cab without pump (187 C/A for use with DPF/SCR aftertreatment). 100" wide with L and R extended rescue style high sides and double beavertails. 63" high body for 12'-1" OAH. | $57,976 |
| 3080-0200 | Body aerial HP100 Platform 260" WB 80" cab without pump (180 C/A for use with DPF/SCR aftertreatment). 100" wide with L and R extended rescue style high sides separate rear side compartments and rear side staircases. The door on small compt next to rear outrigger to match wheelwell. | $57,395 |
| 3080-0201 | Body aerial 95/CR100 medium cab without pump (187 C/A for use with DPF/SCR aftertreatment). 100" wide with L and R extended rescue style high sides and rear side staircases. Includes rear perimeter of body aft of rear jack legs raised 4" to improve angle of departure. 61" high body for 11'-10" OAH. | $57,976 |
| 3080-0202 | Body aerial HM100/110 ladder without pump (172 C/A for use with DPF/SCR aftertreatment). 100" wide with L and R extended rescue style high sides and double beavertails. 64" high body for 11'-2" +/-1" OAH. Requires troughed cab (if applicable). | $65,285 |
| 3080-0204 | Body aerial single axle LTH100 without pump (162 C/A for use with vertical SCR aftertreatment). 96" wide with L and R rescue style high sides and rear side staircases. Rear of body aft of rear jack legs raised 3". 61" high body. (10'-7" OAH with no wway 10'10" OAH with wway). | $59,216 |
| 3080-0215 | Body aerial HP75 / HP78 SideStacker Quest / CII / Typhoon with pump for industrial applications. Single axle. Includes extended R1 compt and pocket style drop down step at left rear staircase. The rear access door to match the rear body finish. | $48,934 |
| 3080-0216 | Body aerial HM100/110 CII/Quest long cab ladder without pump (162.5" C/A for use with DPF/SCR aftertreatment). 100" wide with L and R extended rescue style high sides L1 hydraulic oil reservoir and double beavertails. 64" high body for 11'-2" +/-1" OAH. Requires troughed cab (if applicable). | $65,285 |
| 3080-0217 | Body aerial HP100 ladder without pump (172 C/A for use with DPF/SCR aftertreatment). 100" wide tandem axle. (230" WB medium cab / 240" WB long cab). Includes L and R extended rescue style high sides provisions for L1 hydraulic reservoir and double beavertails. 61" high body for low OAH. Requires troughed cab. | $64,979 |
| 3080-0218 | Body aerial HP100 ladder without pump (172 C/A for use with DPF/SCR aftertreatment). 100" wide tandem axle. (230" WB medium cab / 240" WB long cab). Includes L and R extended rescue style high sides and dual rear side staircases. 64" high body for 11'-9" OAH. | $61,286 |

| Item No. | Description | |
|---|---|---|
| 3080-0219 | Body aerial single axle LTH100 without pump (162 C/A for use with vertical SCR aftertreatment). 100" wide with L and R rescue style extended high sides and rear side staircases. Rear of body aft of rear jack legs raised 3". 61" high body. (10'-7" OAH with no wway 10'10" OAH with wway). | $61,325 |
| 3080-0220 | Body eMAX aerial HP75/78 with combined standard height front side compts and center hose bed. Configured for midship pump and 400-500 tank. Single axle 100" wide body. | $46,478 |
| 3080-0224 | Body aerial HM100/110 ladder without pump (172 C/A for use with DPF/SCR aftertreatment). 100" wide with L and R extended rescue style high sides and dual rear side staircases. 67" high body for 11'-5" OAH. | $61,325 |
| 3080-0227 | Body aerial HP100 Platform 250" WB 67.5/68 cab without pump (182" C/A for use with DPF/SCR aftertreatment). 100" wide with L and R extended rescue style high sides seperate rear side compartments upper 70" wide open storage beneath aerial and rear side staircases. Rear of body raised 4" for improved angle of departure. The doors on small compts next to rear outrigger to match wheelwell. | $59,504 |
| 3080-0228 | Body aerial HP75/78 SideStacker CII with pump. Single axle. 62" body height for low OAH applications. Includes pocket style drop down step at left rear staircase. The rear access doors to match the rear body finish. | $48,934 |
| 3080-0229 | Body aerial HP100 with 3" lower center hose bed body. Configured for midship pump and 450 tank. 100" wide body with 230" wheelbase tandem axle. Includes L and R extended rescue style high sides and double beavertails. | $72,252 |
| 3080-0231 | Body aerial 95/CR100 medium cab without pump (187 C/A for use with DPF/SCR aftertreatment). 100" wide with L and R extended rescue style high sides and rear side staircases. 58" high body for 11'-7" +or-1" OAH. Requires troughed cab. | $62,388 |
| 3080-0232 | Body aerial HP100 ladder without pump (172 C/A for use with DPF/SCR aftertreatment). 100" wide tandem axle. (230" WB medium cab / 240" WB long cab). Includes L and R extended rescue style high sides center front of body mounted aerial hydraulic reservoir and double beavertails. 61" high body for low OAH. Requires troughed cab. | $64,979 |
| 3080-0234 | Body aerial HP75 / HP78 with combined standard height front side compts beavertail compts combined w/rear side compts and center hose bed. Configured for midship pump and 400-500 tank. Single axle 100" wide body. The rear turntable access door to match the rear body finish. | $46,699 |
| 3080-0235 | Body aerial HP75 / HP78 SideStacker Quest / CII / Typhoon with pump for industrial applications. Single axle. Includes pocket style drop down step at left rear staircase. The rear access door(s) to match the rear body finish. | $48,934 |
| 3080-0238 | Body aerial HP100 Platform without pump (192 C/A for use with DPF/SCR after treatment). 100" wide with L and R extended rescue style high sides left side combined rear compartment with rear side staircase right side rear compartment IPO rear side staircase . The doors on small compartments next to rear outriggers to match wheel well. | $57,976 |
| 3080-0241 | Body aerial HP100 ladder 240" WB 80" cab without pump (160 C/A for use with DPF/SCR aftertreatment). 100" wide with L and R extended rescue style high sides extra deep open storage beneath aerial and double beavertails. | $60,246 |
| 3080-0247 | Body aerial 95/CR100 with center hose bed for 250" W/B. Configured for midship pump and 300 tank (192 C/A for use with DPF/SCR aftertreatment). 100" wide with L and R extended rescue style high sides and double beavertails. 63" high body for 12'-1" OAH. | $71,307 |
| 3080-0248 | Body aerial HPS105 with center hose bed. Configured for midship pump and 300 tank (182 C/A). 100" wide with L and R extended rescue style high sides double beavertails and raised rear body for improved angle of departure. | $68,393 |
| 3080-0249 | Body aerial HPS105 without pump (182 C/A for use with DPF/SCR aftertreatment). 100" wide with L and R extended rescue style high sides rear side staircases and raised rear body for improved angle of departure. | $57,976 |
| 3080-0250 | Body aerial single axle LTH100 without pump (162 C/A for use with vertical SCR aftertreatment). 96" wide with L and R rescue style high sides combined rear side compartments and an independent rear staircase module to rear of main body with Zico swing out and down access ladders one each side. Rear staircase module rear corners pinched in for better turning clearance and raised 3" for improved angle of departure. 61" high body. (10'-7" OAH with no wway 10'10" OAH with wway). | $65,028 |
| 3080-0251 | Body aerial HP100 Platform (lowered 2") with hydraulic driven water pump and 200 gallon tank (192 C/A for use with DPF/SCR after treatment). 100" wide with L and R extended rescue style high sides left side combined rear compartment left rear side staircase right side rear compartment IPO right rear side staircase and rear of body raised 4" for improved angle of departure. The doors on small compartments next to rear outriggers to match wheel well. | $60,034 |

| Item No. | Description | |
|---|---|---|
| 3080-0252 | Body aerial HM100/110/LTH100 with center hose bed. Configured for midship pump and 450 tank. 100" wide with L and R extended rescue style high sides and double beavertails. 64" high body. Requires troughed cab. | $69,576 |
| 3080-0253 | Body aerial HM100/110 with center hose bed. Configured for midship pump and 450 tank. 100" wide with L and R extended rescue style high sides right side hose hose chute only and rear side facing dual staircases . 64" high body for 11'-4" OAH. Requires troughed cab. | $71,633 |
| 3080-0254 | Body aerial HP100 Platform (lowered 1") 260"WB 67.5/68 cab without pump (192.5 C/A for use with DPF/SCR after treatment). 100" wide body L2/R2 transverse and dual rear side staircases. Left side to include recessed area for horizontal ladder storage. Right side to include extended rescue style high sides combined rear side compartment. The door on small compts next to rear outrigger to match wheel well. | $62,654 |
| 3080-0255 | Body aerial HP75 / HP78 with combined extended height front side compartment on driver side and separate extended height front side compartments (R1-36"W / R2 22"W) on officer side enhanced extended combined rear beavertail compts and center hose bed. Configured for midship pump and 400-500 tank. Single axle 100'' wide body. Includes driver and officer side ladder tunnels and hose chutes extended rearward flush with rear of body with standard center style turntable access staircase. The rear turntable access door to match the rear body finish. | $54,456 |
| 3080-0256 | Body aerial 95/CR100 with center hose bed. Configured for 240" WB medium cab midship pump w/42" PPNL and 300 tank. 100" wide with L and R extended rescue style high sides and double beavertails. 63" high body for 12'-1" OAH | $68,393 |
| 3080-0259 | Body aerial Bronto Industrial RLP. Includes pump module full length hosebed and pocket style flop down steps at each staircase. The doors on compts next to fwd outriggers to match the outrigger covers. The doors on small compts over forward tandem wheel to match wheelwell. The doors at rear of body on the lower aerial control panel compt to match rear body finish. | $57,185 |
| 3080-0262 | Body aerial HM100/110/LTH100 without pump (162 C/A for use with DPF/SCR aftertreatment) 230" wheelbase tandem axle with long cab. 100" wide with L and R extended rescue style high sides and dual rear side staircases. 61" high body for low OAH. Requires troughed cab. | $67,757 |
| 3080-0263 | Body aerial 95/CR100/CR137 with center hose bed. Configured for 250" wheel base long cab midship pump and 300 gallon tall tank. 100" wide with L and R extended rescue style high sides and double beavertails. Note hose chutes modified on driver and officer sides to allow 5" LDH hose to pass thru due to 5" lower aerial/body. 58" high body for 11'-7" +or- 1" OAH. Requires troughed cab. | $74,301 |
| 3080-0265 | Body aerial HP100 Platform without pump with 260" W/B and 80" cab (180" C/A for use with DPF/SCR aftertreatment). 100" wide with L and R extended rescue style high sides seperate rear side compartments and rear side staircase (left side only). The door on small compt next to rear outrigger to match wheelwell. | $57,976 |
| 3080-0267 | Body aerial 95/CR100 CII/Quest long cab without pump. 250"W/B (182 C/A for use with DPF/SCR aftertreatment). 100" wide with L and R extended rescue style high sides and rear side staircases. 61" high body for 11'-10" OAH. | $57,976 |
| 3080-0268 | Body aerial RLP without pump. Includes dual rear side staircases with pocket style flop down steps at each staircase. The doors on compts next to fwd outriggers to match the outrigger covers. The doors on small compts over forward tandem wheel to match wheelwell. The doors at rear of body on the lower aerial control panel compt to match rear body finish. | $52,697 |
| 3080-0269 | Body aerial single axle LTH100 without pump for use with a medium cab (162 C/A for use with vertical SCR aftertreatment). 96" wide R1 rescue style high side with L and R half sides with recess above for horizontal ladder storage. Upper body storage compartments for storage beneath aerial (1) one left side forward compartment (1) one transverse compartment and (2) two rearward compartments with open storage between. Dual rear side staircases includes 1" flex joint separating it from the main body rear corners pinched in for better turning clearance and raised 3" for improved angle of departure. 61" high body. (10'-7" OAH with no wway 10'10" OAH with wway). | $62,808 |
| 3080-0273 | Body aerial HP100 with center hose bed. Configured for midship pump and 500 tank. 100" wide body with (230" wheelbase medium cab/240" wheelbase long cab) tandem axle. Includes L and R extended rescue style high sides and double beavertails. Extended high only will be raised 3" for increased hosebed. | $70,572 |

| Item No. | Description | |
|---|---|---|
| 3080-0274 | Body aerial HP100 ladder without pump (172 C/A for use with DPF/SCR aftertreatment). 100" wide tandem axle with L1 extended rescue style high side and R1 extended rescue style high side with half right side for recessed ladder storage above tandem axle. (230" WB medium cab / 240" WB long cab). Includes provisions for L1 hydraulic reservoir and double beavertails. | $62,590 |
| 3080-0276 | Body eMAX aerial HP75/78 with combined standard height front side compts a deep upper L1 one large compartment over driver side rear wheel enhanced extended beavertail compartments combined with rear side compartments and center hose bed. Configured for midship pump and 400-500 tank. Single axle 100" wide body. | $55,666 |
| 3080-0277 | Body aerial HP100 Platform 250"WB 58 med cab without pump (192 C/A for use with DPF/SCR after treatment). 100" wide body L2/R2 transverse and dual rear side staircases. Right side to include recessed area for horizontal ladder storage. Left side to include extended rescue style high sides combined rear side compartment. The door on small compts next to rear outrigger to match wheel well. | $62,654 |
| 3090-0019 | Body Specs - SideStacker aerial with tandem axle. Includes left rear staircase with pocket style drop down step and 3/16" smooth plate compartment floors. | $1,371 |
| 3100-0317 | Horizontal partition located in driver side roof top compartment over DOT bottles. Floor to be provided above the DOT bottles to use remaining area above. | $918 |
| 3100-0512 | Vertical partition located in driver side roof top compartment at rear access door. Partition is to be full height of compartment and 61" long capped of at the end to create a boxed in area for separate storage. | $464 |
| 3100-0513 | Driver half side tandem body with (1) 44" wide first forward (1) 30" wide second forward and (1) 66" wide rearward compartments. Compartment height openings to be 30" IPO standard 34". | $11,687 |
| 3110-0027 | Rear of body to have un-painted extrusions with un-painted smooth plate body panels or just unpainted smooth plate to facilitate rear body striping. | $256 |
| 3110-0028 | Rear body panels to be painted smooth plate. | $899 |
| 3110-0058 | Rear of body to have flush un-painted smooth plate body panels to facilitate rear body striping. | $1,324 |
| 3110-0072 | Rear of body to have flush painted smooth plate body panels. | $1,619 |
| 3110-0079 | Rear of body to have painted extrusions with un-painted smooth plate body panels to facilitate rear body panel striping. | $256 |
| 3110-0244 | Single Low Rear Compartment with Officer Side Storage Tunnel. For use with low hosebed. Includes smooth plate panels and storage access door with push button latch. | $1,156 |
| 3110-0291 | Single Low Rear Compartment with Officer Side Storage Tunnel. For use with low hosebed. Includes smooth plate panels and storage access door with d-ring latch. | $1,156 |
| 3110-0360 | Rear of body to have un-painted smooth plate overlay style body panels to facilitate rear body striping. | $1,324 |
| 3110-0384 | Rear of body to have un-painted extrusions with un-painted smooth plate overlay style body panels to facilitate rear body striping. (For use with HM100/110 NPNT and center hosebed HM100/110 HP100CR100/137 HPS105 95-P only) | $256 |
| 3120-0486 | Vertical and horizontal partitions located in officer side roof top compartment. Vertical partition located rearward of electric cord reel and horizontal partition located over DOT bottles. Floor to be provided above the DOT bottles to use remaining area above. | $1,255 |
| 3120-0692 | Vertical partitions located in officer side roof top compartment. Vertical partition located 3" forward of electric cord reel and a adjustable divider shall be installed forward of the partition. The divider shall span from front to rear and be adjustable left to right. The use of Unistrut or equal materials shall provide for adjustability as required for divider. The divider plate shall be 3/16" smooth aluminum. | $699 |
| 3130-0024 | Upper SM pump module with diamond plate storage pan (only). | $1,613 |
| 3130-0059 | Pump module HP75 / HP78. Includes running boards. | $7,530 |
| 3130-0282 | Stainless steel 46" wide lower pump module. Includes side running boards with Bustin Tread inserts. | $5,039 |
| 3130-0291 | Upper SM stainless steel pump module with single stacked triple crosslays and top open storage with treadplate flooring. | $1,863 |

| Item No. | Description | |
|---|---|---|
| 3130-0421 | eMAX Pump module HP75/78. Includes enclosed pump panel compt on officer side (opposite pump panel) lower and upper storage areas center front pump access doors removable center floor in upper area storage pan and boom support diamond plate filler panels. Lower storage area to hold (1) tray for 200' of 1.75" DJ preconnected hose and (1) tray for 200' of 2.5" DJ preconnected hose. Upper storage area to hold (1) tray for 200' of 1.75" DJ preconnected hose offset to rear and storage area for (2) backboards vertically stored offset forward w/sleeve each side of center pump access. | $8,484 |
| 3130-0482 | eMAX Pump module HP75/78. Includes enclosed pump panel compt on officer side (opposite pump panel) lower and upper storage areas center front pump access doors removable center floor in upper area storage pan and boom support diamond plate filler panels. Lower storage area to hold (1) tray for 200' of 3" DJ preconnected hose offset to rear and storage area for (2) backboards vertically stored offset forward w/sleeve each side of center pump access. Upper storage area for dry storage. | $8,484 |
| 3130-0490 | Speedlay/crosslay HP75/78 module(stacked) for triple speedlays and double crosslay above. Includes 44" wide pump panel opening running boards upper area dunnage pan lower storage compartments with push button latches and boom support diamond plate filler panels. Lower for (2) 1.75" speedlays to hold 150' of 1.75" DJ hose in each. Upper for (1) 2.5" speedlay to hold 200' of 2.5" DJ hose. Speedlays to utilize removable tray(s). Upper crosslay storage to hold up to 100' of 1.75" DJ (forward) and 400' of 2.5" DJ (rearward). | $7,934 |
| 3130-0521 | eMAX Pump module HP75/78. Includes enclosed pump panel compt on officer side (opposite pump panel) lower and upper storage areas center front pump access doors removable center floor in upper area storage pan and boom support diamond plate filler panels. Lower storage area to hold (1) tray for 200' of 1.75" DJ preconnected hose and (1) tray for 200' of 2.5" DJ preconnected hose. Upper storage area to hold (1) tray for 200' of 1.75" DJ preconnected hose offset to rear of transverse storage area w/sleeve each side of center pump access. Label TRANSVERSE STORAGE (IPO BACK BOARD STORAGE). | $8,484 |
| 3130-0564 | eMAX Pump module HP75/78. Includes enclosed pump panel compt on officer side (opposite pump panel) lower and upper storage areas center front pump access doors removable center floor in upper area storage pan and boom support diamond plate filler panels. Lower storage area to hold (2) preconnected hose storage trays. Upper storage area to to have provision for (2) backboards vertically stored offset forward w/sleeve each side of center pump access. | $8,484 |
| 3130-0602 | Dunnage pan notch. Located in the pump module. Pan to have a notch on the rear wall for the ladders to extend into. | $271 |
| 3130-0611 | eMAX Pump module HP75/78. Includes enclosed pump panel compt on officer side (opposite pump panel) lower and upper storage areas center front pump access doors removable center floor in upper area storage pan and boom support diamond plate filler panels. Lower storage area to hold (1) tray for 200' of 1.75" DJ preconnected hose and (1) tray for 200' of 2.5" DJ preconnected hose. Upper storage area to hold (1) tray for 200' of 1.75" DJ preconnected hose and for dry storage (1) tray for 200' of 2.5" DJ hose. | $8,484 |
| 3130-0632 | Upper SM pump module with diamond plate storage pan and storage compartment. Storage compartment located forward of storage pan. Includes (1) full height adjustable divider and vertically hinged stainless steel door each side and push button latches. | $4,812 |
| 3130-0633 | Upper stainless steel pump module with single stacked triple crosslays and top open storage with treadplate flooring. Crosslay floors lowered to approximately 66" above ground. Crosslay plumbing terminates at side panels below beds. | $2,910 |
| 3130-0658 | eMAX Pump module HP75/78. Includes enclosed pump panel compt on officer side (opposite pump panel) lower and upper storage areas center front pump access doors removable center floor in upper area storage pan and boom support diamond plate filler panels. Upper and lower storage area to hold (1) tray for 200' of 1.75" DJ preconnected hose and (1) tray for 200' of 2.5" DJ preconnected hose. | $8,484 |
| 3130-0679 | Side mount panel for lever controls IPO push pull handles. | $1,472 |
| 3130-0683 | eMAX Pump module HP75/78. Includes enclosed pump panel compt on officer side (opposite pump panel) lower and upper storage areas center front pump access doors removable center floor in upper area storage pan and boom support diamond plate filler panels. Lower storage area to hold (2) trays for 200' of 1.75" DJ preconnected hose. Upper storage area to hold (1) tray for 200' of 2.50" DJ preconnected hose offset to rear and storage area for (2) backboards vertically stored offset forward w/sleeve each side of center pump access. | $8,484 |
| 3130-0709 | Pump panels to be recess mounted in the pump module by approximately 2" each side of body. | $512 |

| Item No. | Description | |
|---|---|---|
| 3130-0710 | eMAX Pump module HP75/78. Includes enclosed pump panel compt on officer side (opposite pump panel) lower and upper storage areas center front pump access doors removable center floor in upper area storage pan and boom support diamond plate filler panels. Lower storage area to hold (2) preconnected hose storage trays. Upper storage area to have transverse area accessible thru lift-up door each side. | $8,484 |
| 3130-0711 | eMAX Pump module HP75/78. Includes enclosed pump panel compt on officer side (opposite pump panel) lower and upper storage areas center front pump access doors removable center floor in upper area storage pan and boom support diamond plate filler panels. Lower storage area to hold (1) tray for 200' of 3" DJ preconnected hose offset to rear and storage area for (2) backboards vertically stored offset forward w/sleeve each side of center pump access. Upper transverse storage area for dry storage accessible from both sides and open top area. | $8,964 |
| 3134-0006 | The single gauge panel on the driver's side of the side mount module is to be hinged downward. Includes two (2) cable hold opens and latches. | $138 |
| 3134-0009 | The gauge panel(s) on the driver side of the Side Mount module to be hinged upward. Includes two (2) gas shock hold opens and latches. | $138 |
| 3134-0011 | Officer side pump panel to be vertical hinged on forward extrusion. Panel(s) to be secured in the closed position with push button latches. Upper panel to be held open with gas shock. | $507 |
| 3134-0019 | The driver and officer side pump panels are to be painted Zolatone black. | $643 |
| 3134-0020 | The driver and officer side pump panels are to be painted Zolatone gray. | $643 |
| 3134-0028 | Pump panel layout and approval drawing to match existing and/or previous unit. To match as close as possible (Engineering and/or vendor requirements may alter final panel layout). | $427 |
| 3134-0039 | The gauge panel on the driver side pump panel is to be hinged upward. Includes two spring type hold opens two trigger latches and a recessed handle. | $138 |
| 3134-0053 | Officer side pump panel Escutchion Plate shall be attach with Thumb Latch. | $182 |
| 3134-0055 | Officer side upper pump access panel to be horizontal hinged with stainless steel door. Includes (2) push button latches and (2) hold open devices. | $215 |
| 3134-0064 | The gauge panel(s) on the driver side of the Side Mount module to be hinged upward. Panel(s) to include (2) mechanical/pneumatic (as applicable to panel size) hold opens and latches. | $138 |
| 3134-0072 | Driver and officer side mounted pump panels are to be brushed stainless steel. | $554 |
| 3134-0082 | Driver side pump panel Escutchion Plate shall be hinge forward. Include thumb Latches. | $274 |
| 3134-0088 | The side pump intake / discharge panels to be painted Zolatone black. eMAX only. | $318 |
| 3134-0089 | Pump operator control panel in driver side forward body compartment to be painted Zolatone black. eMAX only. | $403 |
| 3134-0104 | Officer side upper pump access panel behind crosslays to be horizontally hinged with stainless steel door. Includes (2) push button latches and (2) hold open devices. | $215 |
| 3134-0106 | Officer side pump panel escutchion plate shall be around each discharge and pump intakes. | $180 |
| 3134-0113 | Officer side upper pump access panel to be horizontally hinged with aluminum smooth plate door painted Zolatone black both sides. Includes (2) push button latches and (2) hold open devices. | $256 |
| 3134-0134 | Officer side upper pump access panel to be horizontally hinged door painted Zolatone to match lower panels. Includes (2) push button latches and (2) hold open devices. | $215 |
| 3134-0136 | The side upper module panels/ access smooth plate doors to be painted Zolatone black. eMAX only. | $318 |
| 3134-0140 | Officer side upper pump access panel to be horizontally hinged with smooth plate door painted to match lower panels. Includes (2) push button latches and (1) hold open device. | $215 |
| 3134-0146 | Officer side upper pump access panel to be horizontally hinged with stainless steel door. Includes (2) push button latches and (1) hold open device. | $215 |
| 3134-0150 | Pump operator control panel in driver side forward body compartment L1 to be stainless steel.480 | $494 |
| 3134-0152 | The pump panels including gauge panels shall be coated with LINE-X. | $1,308 |
| 3134-0153 | Officer's side panels forward of and above pump access door to be smooth plate and painted job color IPOS. | $430 |
| 3134-0157 | The upper gauge panel is to be hinged upward. Includes latching and hold-open device. | $181 |
| 3136-0000 | Air horn switch at pump panel. Switch to be labeled ''Evacuation Alert''. Location: [#LOC]. | $143 |
| 3136-0001 | Backboard storage compartment in pump module. Locate rearward of crosslays on SM and forward of crosslays on TM. Includes vertical hinged diamond plate access door each side. | $1,049 |
| 3136-0002 | Microphone box. Locate at the [#LOC]. | $502 |
| 3136-0003 | Microphone box Cast Products. Locate at/in the [#LOC]. | $468 |

| Item No. | Description | |
|---|---|---|
| 3136-0004 | The lower area of the pump compartment to have a four (4) sided heat pan with two (2) removable (side to side) bottoms. Bottoms to be secured in the closed position with mechanical fasteners. | $1,020 |
| 3136-0005 | The crosslay divider(s) to be notched both ends for Task Force Nozzle. | $124 |
| 3136-0006 | Two (2) pump compartment heaters are to be mounted in the pump area. Locate as low as possible. | $1,658 |
| 3136-0011 | P-Rubber in flex joint(s) between pump module and/or body modules. | $608 |
| 3136-0021 | Divider in storage pan with adjustable tracks (front to rear). | $188 |
| 3136-0023 | Microphone Box Cast Products. Locate at/in the [#LOC]. | $497 |
| 3136-0027 | The lower area of the pump compartment to have (2) heat pans. (1) pan located under the driver side and (1) pan located under the officer side. pump compartment. | $1,020 |
| 3136-0029 | Air horn switch at pump panel. Switch to be labeled ''Air Horn''. Location: [#LOC]. | $143 |
| 3136-0031 | Removable Speedlay Tray(s). The floor of the tray(s) to be slotted to prevent the accumulation of water and allow for ventilation of wet hose. | $611 |
| 3136-0033 | Crosslay divider(s) to be lowered approx 5'' to provide room for bail handled nozzle(s) below cover. | $124 |
| 3136-0034 | Microphone box 10W X 6H X 11D located on pump operator panel. | $571 |
| 3136-0045 | Microphone Box Cast Products. Locate at/in the [#LOC]. | $497 |
| 3136-0047 | Backboard storage compartment in pump module. Locate rearward of crosslays on SM and forward of crosslays on TM. Includes vertically hinged smooth plate painted job color access door each side. | $1,289 |
| 3136-0051 | Air horn switch at pump panel. Switch to be labeled ''Code Red''. Location: [#LOC]. | $143 |
| 3136-0056 | The crosslay divider(s) to be held 12" short both ends. | $409 |
| 3136-0060 | Transverse compt over pump panel. Includes lift-up dia plt door on each end with gas shock and D-Ring latch. | $2,330 |
| 3136-0061 | Heat pan removable bottoms to have screws and nuts in place of butterfly latches. | $277 |
| 3136-0062 | Crosslay divider(s) to be adjustable front to rear. | $963 |
| 3136-0064 | Heat pan. The lower area of the pump compartment to have a four (4) sided heat pan with two (2) removable (side to side) bottoms. Bottoms to be secured in the closed position with butterfly latches. | $1,020 |
| 3136-0066 | Microphone box. Dimensions for microphone box are 12.5" wide x 8" high x 6" deep. Locate at the [#LOC]. | $550 |
| 3136-0067 | DEF Tank mounting provision in right side of pump compt. Includes tank supports heat shield and tank fill access either through pump access door or separate door as applicable. | $365 |
| 3136-0071 | Microphone Box Cast Products. Locate at/in the [#LOC]. | $468 |
| 3136-0079 | Q2B switch at pump panel. Switch to be labeled "Evacuation Alert". Location: [#LOC]. | $143 |
| 3136-0081 | A pump compartment heater with 110V blower to be mounted in the pump area. | $1,292 |
| 3136-0085 | Cast Products EB0010-1-A microphone box. Locate on driver side pump panel. Hinge door to the right. | $540 |
| 3136-0090 | Speedlay tray - removable. Tray includes a 1.25" extruded alum handle low on each end of tray and slots down each side to facilitate lifting. The floor of the tray shall have poly slides and be slotted to prevent the accumulation of water and allow for ventilation of wet hose. | $611 |
| 3136-0097 | Cold climate insulation for pump module. Includes insulation for top front wall rear wall and compartment/stairway back walls as applicable. RLP application only. | $1,314 |
| 3136-0098 | Microphone box. Dimensions for microphone box are 12" wide x 12" high x 6" deep. Locate at the [#LOC]. | $570 |
| 3136-0100 | Notched Speedlay divider(s) on both ends for connecting preconnected hoses. Notch to be 12"L X 4"H enough room to use a spanner wincher for connecting hoses. | $96 |
| 3136-0111 | Microphone box. Dimensions for microphone box are 8" wide x 12" high x 6" deep. Locate at the [#LOC]. | $550 |
| 3136-0114 | The running board(s) to be notched for Pistion Intake Valve. Location(s): [#LOC]. | $473 |
| 3136-0115 | The lower area of the pump compartment to have a four (4) sided heat pan with two (2) removable (side to side) bottoms. Lower section of pan designed to provide the maximum amount of ground clearance. Bottoms to be secured in the closed position with butterfly latches. | $1,020 |
| 3136-0116 | DEF Tank mounting provision in left side pump compt to the rear of the pump. Includes tank supports and tank fill access door. | $322 |
| 3136-0117 | P-Rubber in flex joint(s) between pump module and/or body modules. Horizontal across tops and along sides at flex joint(s). | $608 |

| Item No. | Description | |
|---|---|---|
| 3136-0118 | A two (2) piece aluminum pan shall be bolted in place below the pump controls within the pump module. This pan shall utilize .090 aluminum plate to provide a shield to reduce heat loss as the pump controls exit the pump module for the top mount control panel. | $265 |
| 3136-0121 | Speedlay tray - Polypropylene - removable. Tray includes pull out grab handle (poly dowel) down low on each end to facilitate lifting. The trays shall be made from Polypropylene the floor of the tray shall be slotted to prevent the accumulation of water and allow for ventilation of wet hose. | $867 |
| 3136-0124 | Backboard storage compartment located to rear of crosslays. Includes vertically hinged smooth plate painted job color access door each side. Top cover to be smooth plate IPO diamond plate painted black durabak. | $1,342 |
| 3136-0125 | The officer side pump module upper plate-work shall be smooth plate IPO diamond plate (where E-One logo is mounted). | $121 |
| 3136-0126 | Microphone box. Dimensions for microphone box are 7.5" wide x 15" high x 11" deep. Locate at the [#LOC]. | $550 |
| 3136-0130 | Speedlay tray - Polypropylene - removable. Tray includes pull out grab handle (poly dowel) down low on each end to facilitate lifting. The tray(s) shall be sized approximately 18" H X 10" W. The tray(s) shall be made from Polypropylene the floor of the tray shall be slotted to prevent the accumulation of water and allow for ventilation of wet hose. | $867 |
| 3136-0134 | Replace pump module handrails (left and right) with 18" handrails IPOS. | $379 |
| 3136-0136 | Removable speedlay tray(s). The floor of the tray(s) shall be sloped from a raised position in the middle slanted downward towards each end. Additionally the floors shall be slotted to prevent the accumulation of water and allow for ventilation of wet hose. There shall be slotted hand holds on each side of the tray (IPO grab handles on each end). | $746 |
| 3136-0151 | Microphone box. Dimensions for microphone box are 12" wide x 12" high x 6" deep. Locate at the driver side pump panel. With hold open device. | $673 |
| 3136-0152 | Air horn switch at pump panel. Switch to be labeled ''Evacuation Alert'' with a 4" x 2.5" orange backing plate. | $194 |
| 3136-0158 | Upper and/or lower speedlay tray 8.5" interior width. - removable. Tray includes a 1.25" extruded alum handle low on each end of tray and slots down each side to facilitate lifting. The floor of the tray shall have poly slides and be slotted to prevent the accumulation of water and allow for ventilation of wet hose. | $611 |
| 3136-0162 | Hi Rise tray - removable. Tray includes a 1.25" extruded alum handle low on each end of tray and slots down each side to facilitate lifting. The floor of the tray shall have poly slides and be slotted to prevent the accumulation of water and allow for ventilation of wet hose. | $611 |
| 3136-0165 | Microphone box. Dimensions for microphone box are 14" wide x 6" high x 6" deep. Locate at the pump operator panel. | $550 |
| 3136-0166 | Removable Speedlay Tray(s). The floor of the tray(s) to be slotted to prevent the accumulation of water and allow for ventilation of wet hose. The front and rear walls of tray(s) to be the same height. There shall be vertical slots on each side of the tray ( in place of extruded grab handle) to facilitate lifting. This tray shall only be used with taller speedlay opening so the preconnect swivel shall be at the top (as opposed to rear wall) and walls of the tray can be same height. | $611 |
| 3136-0181 | Speedlay tray - removable - extra length for full width module. Tray to be 14W x 9H x Full width of module. Tray includes a 1.25" extruded alum handle on each end of tray and slots down each side to facilitate lifting. The floor of the tray shall have poly slides and be slotted to prevent the accumulation of water and allow for ventilation of wet hose. | $704 |
| 3136-0183 | Backboard/pike pole storage compartment located to rear of crosslays. Includes partition between backboard and pike poles and vertically hinged diamond plate access door each side. Note pike poles will only be accessible from driver side and longest pike pole that compartment will accommodate is 6'. | $1,207 |
| 3136-0186 | Air horn switch at pump panel. Switch to be labeled ''Evacuation Alert'' with red cover. Location: [#LOC]. | $143 |
| 3136-0190 | Backboard storage compartment in pump module. Locate rearward of crosslays on SM and forward of crosslays on TM. Includes vertical hinged diamond plate access door each side. Backboard storage to be 10" wide. | $1,009 |
| 3136-0196 | Backboard/pike pole storage compartment located to rear of crosslays. Two (2) pikes to be offset rear in the compartment and up high. One (1) pike pole accessible from driver side and one (1) to be accessible from the officer side. Longest pike pole that compartment will accommodate is 6'. | $1,207 |

| Item No. | Description | |
|---|---|---|
| 3136-0197 | Backboard storage compartment in pump module. Locate rearward of crosslays on SM and forward of crosslays on TM. Includes vertical hinged diamond plate access door each side hinged rearward. Opening to be 7" wide. | $1,049 |
| 3136-0205 | Removable Aluminum Speedlay Tray with slotted floor to prevent the accumulation of water and allow for ventilation of wet hose. Includes vertical slotted hand hold cutouts on each end in place of extruded grab handle and no lip on either end to facilitate easy removal of hose. | $611 |
| 3136-0209 | Speedlay tray - removable. Tray includes a 1.25" extruded alum handle low on each end of tray and slots down each side to facilitate lifting. The floor of the tray shall have poly slides and be slotted to prevent the accumulation of water and allow for ventilation of wet hose. Tray to be 8" tall IPO standard. | $581 |
| 3136-0216 | Enclosed pump panel backboard/pike pole storage located to rear of crosslays to be accessible beneath rollup door drum on driver and officer side. Includes aluminum smooth plate sleeve for (2) two backboards approx size of backboard: 21"wide x 72"long x 3"thick (2) two 6' aluminum tubes for 6' pike poles one accessible from driver side one accessible from officer side and horizontally hinged lift-up diamond plate doors with gas shock hold open and push button latches each side. Note longest pike pole that compartment will accommodate is 6'. Storage pan is not available with this option. | $1,545 |
| 3136-0228 | Upper storage compartment in pump module. Located in the upper rear corner of pump module. Includes driver side vertical hinged diamond plate access door. | $1,049 |
| 3136-0231 | Transverse storage compartment in pump module. Locate rearward of crosslays on SM and forward of crosslays on TM. Includes vertical hinged diamond plate access door each side. Width and Height of storage based on available space forward (or) aft of the crosslays ilo a Dunnage pan if applicable. | $1,049 |
| 3136-0235 | Backboard and Pike Pole storage compartment in pump module. Locate rearward of crosslays on SM and forward of crosslays on TM. Includes vertical hinged diamond plate access door each side. Storage for one (1) backboards forward and three (3) pike poles on the rear wall stored vertically. The pike pole tubes to be inside each door opening 8" (60" long tubes). The door opening to be 6" wide. | $1,548 |
| 3136-0244 | The walls of top mount walk way tool storage compartments to have (2) additional louver patterns in rear wall of each compartment for a total of (3) each side IPO standard for additional ventilation. | $187 |
| 3136-0247 | The module design shall include a storage area rearward of the cross lays for (2) New York Hooks each 72" long. The storage area shall have an opening of approximately 20in. high x 5in. wide. The hooks shall be secured with 1/8in. (.125) aluminum treadplate vertical hinged doors on each end of the compartment with push button latches. There shall be a horizontal divider 8in. off storage compartment floor and the door shall be tied to door ajar. | $1,077 |
| 3136-0254 | Divider in back board compartment located 3" from the front wall. Rearward of the divider a full height stop located 50" from the door opening on the officer side for a 1" x 17" high x 45" long airbag. | $230 |
| 3136-0260 | Air horn switch at officer side pump panel. Switch to be labeled ''Evacuation Alert'' with a 4" x 2.5" orange backing plate. | $194 |
| 3136-0268 | Booster Reel Riser for rollers. Locate with officer side reel rollers. | $91 |
| 3136-0270 | Stokes basket storage compartment in pump module. Locate in forward upper area of module or as applicable per module layout. Includes vertical hinged diamond plate access door each side with applicable latch and shall be tired to door ajar system per NFPA. Must be located in a full body width section of the module as optioned separately. | $1,049 |
| 3136-0281 | Transverse storage compartment in pump module. Locate rearward of crosslays and/or backboard storage if applicable. Includes fixed transverse partition centered in compartment vertically hinged double pan diamond plate access door each side and sealed top to prevent moisture from entering. | $1,464 |
| 3300-0007 | Door single vertical hinged painted. Location(s): [#LOC] | $754 |
| 3300-0008 | Door double vertical hinged painted. Location(s): [#LOC]. | $838 |
| 3300-0009 | Door single vertical hinged diamond plate. Location(s): [#LOC] | $527 |
| 3300-0010 | Door double vertical hinged diamond plate. Location(s): [#LOC]. | $754 |
| 3300-0011 | Door single horizontal hinged lift-up box pan configuration painted. Location(s): [#LOC] | $732 |
| 3300-0012 | Door single horizontal hinged lift-up box pan configuration diamond plate. Location(s): [#LOC] | $568 |
| 3300-0013 | Door roll up short (up to 45") with satin finish POK. Location(s): [#LOC] | $759 |
| 3300-0014 | Door roll up tall (greater than 45") with satin finish POK. Location(s): [#LOC] | $1,086 |
| 3300-0015 | Door roll up short (up to 45") with painted finish POK. Location(s): [#LOC] | $1,214 |
| 3300-0016 | Door roll up tall (greater than 45") with painted finish POK. Location(s): [#LOC] | $1,538 |

| Item No. | Description | |
|---|---|---|
| 3300-0017 | Door roll up short (up to 45") with satin finish ROM. Location(s): [#LOC]. | $845 |
| 3300-0019 | Door roll up tall (greater than 45") with satin finish ROM. Location(s): [#LOC]. | $1,205 |
| 3300-0021 | Door roll up short (up to 45") with painted finish ROM. Location(s): [#LOC]. | $1,431 |
| 3300-0022 | Door roll up tall (greater than 45") with painted finish ROM. Location(s): [#LOC]. | $1,791 |
| 3300-0025 | Door single horizontal hinged drop down painted. Location(s): [#LOC]. Door(s) will have chain hold open devices. | $605 |
| 3300-0030 | Door double 3-point vertical hinged painted. Location(s): [#LOC] | $1,670 |
| 3300-0062 | Keyed compartment door latch with #1250 key. Location(s): [#LOC]. | $81 |
| 3300-0063 | Keyed roll-up compartment door with #1250 key. Location(s): [#LOC]. | $142 |
| 3300-0064 | All apparatus doors body and chassis are to be keyed alike. Not avail on Commercial Chassis. Requires keyed latch option to be included in shop order. | $312 |
| 3300-0065 | Electric lock for an ROM roll-up door (EA). The door to lock on both sides of compartment as applicable. Includes manual J236 key lock. Location(s): [#LOC] | $620 |
| 3300-0066 | Drip pan for a ROM roll-up door (EA). Location(s): [#LOC]. | $171 |
| 3300-0078 | Cleveland door springs provided for all vertical hinged body doors. | $155 |
| 3300-0096 | Keyed roll-up compartment door with #J236 key. Location(s): [#LOC] | $142 |
| 3300-0097 | Keyed compartment door latch with #J236 key. Location(s): [#LOC] | $81 |
| 3300-0099 | Intergrated sill plate. Water Dam type door sill for ROM rollup door. Location(s):[#LOC] | $146 |
| 3300-0103 | Door double vertical hinged smooth plate sanded. Location(s): [#LOC]. | $838 |
| 3300-0105 | Door roll up tall (greater than 45") with satin finish Amdor. Location(s): [#LOC]. | $1,573 |
| 3300-0106 | Door roll up short (up to 45") with satin finish Amdor. Location(s): [#LOC]. | $1,127 |
| 3300-0107 | Pull down straps for lift-up door. Loc: [#LOC]. | $106 |
| 3300-0120 | Electric lock for a ROM roll-up door (EA). The door to lock on both sides of compartment as applicable. Includes manual 1250 key lock. Location(s): [#LOC] | $620 |
| 3300-0121 | Door bi-fold horizontal hinged painted. Location(s): [#LOC] | $928 |
| 3300-0131 | Door bi-fold horizontal hinged painted. Location(s): [#LOC]. Includes upper door mounted guide roller assembly and the lower door will have chains for side or upper rear body mount or bumper style for lower rear body mounted. | $1,039 |
| 3300-0133 | Door single horizontal hinged drop-down sanded smooth plate. Location(s): [#LOC]. | $480 |
| 3300-0135 | Door double 3-point vertical hinged smooth plate sanded. Location(s): [#LOC]. | $1,670 |
| 3300-0136 | Gas spring(s) on the specified vert hinged compt door(s) to be mounted at the bottom of the door. Compt: [#LOC]. | $176 |
| 3300-0138 | Keyed compartment door latch with #CH751 key. Location(s): [#LOC] | $81 |
| 3300-0139 | Door double 3-point horizontal hinged painted. Location(s): [#LOC]. Lower door should act as an exterior writing surface w/ adjustable angles. The paddle latch on the second door shall not protrude past the edge of the door. | $1,670 |
| 3300-0140 | Door single horizontal hinged drop down diamond plate. Location(s): [#LOC]. | $455 |
| 3300-0144 | Stainless steel door horizontal hinged lift-up painted. Location(s): [#LOC]. | $732 |
| 3300-0151 | Drip pan with drain for a ROM roll-up door (EA). Location(s): [#LOC]. | $219 |
| 3300-0164 | Door double vertical hinged w/rotary latches - painted . Location(s): [#LOC] | $838 |
| 3300-0165 | Door double vertical hinged w/rotary latches - smooth plate sanded. Location(s): [#LOC]. | $838 |
| 3300-0166 | Door double vertical hinged w/rotary latches - diamond plate. Location(s): [#LOC] | $754 |
| 3300-0167 | Door double 3-point vertical hinged w/rotary latches - painted. Location(s): [#LOC] | $1,670 |
| 3300-0169 | Door double 3-point vertical hinged w/rotary latches - smooth plate sanded. Location(s): [#LOC] | $1,670 |
| 3300-0174 | Keyed roll-up compartment door with #CH751 key. Location(s): [#LOC]. | $142 |
| 3300-0177 | Door single horizontal hinged drop down painted. Door will have 2 D-ring handles. Location(s): [#LOC]. | $780 |
| 3300-0186 | Doors B1/B2 at rear of body to be diamond plate IPO standard. Without pump aerial body only. | $126 |
| 3300-0189 | Tri-Mark latches IPO quater turn latches. Includes compartments: B1 B2 & ladder tunnel doors. | $322 |
| 3300-0192 | Polished stainless steel overlay on all double pan door's inner pan on body. 95 mid-mount aerial only. Overlay will be full height and should go around latch gas shock castings and lock cover. | $2,019 |
| 3300-0195 | Door roll up tall (greater than 45") with painted finish Amdor. Location(s):[#LOC]. | $2,134 |
| 3300-0196 | Door double vertical hinged painted includes (2) gas shock-style hold-open device IPOS. Location(s): [#LOC]. | $903 |
| 3300-0197 | Door roll up short (up to 45") with painted finish Amdor. Location(s): [#LOC]. | $1,895 |
| 3300-0202 | Door single horizontal hinged drop-down sanded smooth plate. Location(s): [#LOC]. | $480 |
| 3300-0206 | Additional roll up door stop latches shall be mounted for B1 at a raised location aligned with the bottom of the ladder tunnel. The raised latches/hooks shall not be included as part the door ajar circuit. | $74 |

| Item No. | Description | |
|---|---|---|
| 3300-0211 | Door to be notched for 3" DJ hose. Notch to be 5" W x 1" H. Location: top of B2 officer side door. This door is to be the "first opened" door as shown on drawing. | $301 |
| 3300-0215 | Additional roll up door stop latches (PR) shall be mounted at a raised location aligned with the reduced depth transition area. The raised latches/hooks shall not be included as part the door ajar circuit. Location(s): [#LOC]. | $74 |
| 3300-0220 | Reverse hinge single compartment door. Includes vertical mounted drip rail along forward area of compartment opening (in addition to the horizontal drip rail above the door opening). Location(s): [#LOC]. | $156 |
| 3300-0222 | Double door to have latch handle extension installed on secondary door's interior latch with "PULL" tags. Location(s): [#LOC] | $60 |
| 3300-0223 | Tri-Mark latches IPO quater turn latches. Location(s): ladder tunnel door(s). | $161 |
| 3300-0228 | Door double 3-point vertical hinged w/rotary latches - painted. Location: [#LOC]. D-ring primary door located rearward ipo standard. Door double 3-point vertical hinged w/rotary latches - painted. | $1,670 |
| 3300-0239 | Door single vertical hinged painted with the hinge reversed so the door opens opposite of standard. Location(s): [#LOC] | $754 |
| 3300-0242 | Compartment door L2/R2 & L6/R6 D-ring latch lowered to align with following door's D-ring latch. | $405 |
| 3300-0248 | There shall be single piece compartment door drip rail provided over L1/L2 L5/L6 R1/R2 & R4/R5. Only available with (2) consecutive compartments with like doors. | $203 |
| 3300-0253 | Drip pan with end plates(E-ONE style) for a roll-up door with drain hose. Location(s): [#LOC]. | $342 |
| 3300-0255 | Door double expanded metal (material aluminum) and verticaly hinged. Includes bolt latch and door hold open device. Door to be located inside of body compartment and as close as possible behind exterior body compartment access door. Minimum depth behind expanded doors to be 24 inches. Finish: Sanded aluminum. Locate: R4: forward of partition. | $940 |
| 3300-0257 | Door roll up short (up to 45") with stainless steel door bar and painted finish ROM. Location(s): [#LOC]. | $1,468 |
| 3300-0258 | Door roll up tall (greater than 45") with stainless steel door bar and painted finish ROM. Location(s): [#LOC]. | $1,828 |
| 3300-0259 | Door roll up tall (greater than 45 in.) with painted finish Hansen. Location(s): [#LOC] | $1,900 |
| 3300-0260 | Door roll up short (up to 45 in.) with painted finish Hansen. Location(s): [#LOC] | $1,707 |
| 3300-0261 | Door roll up tall (greater than 45 in.) with satin finish Hansen. Location(s): [#LOC]. | $1,456 |
| 3300-0262 | Door double vertical hinged painted. Location: B1 Primary door with the D-ring latch shall be positioned to the driver side so the first compartment door can be opened on the primary side which the rear discharge poisitioned to the officer side on rear also in use on scene. | $838 |
| 3300-0263 | Door roll up short (up to 45 in.) with satin finish Hansen. Location(s): [#LOC]. | $917 |
| 3300-0264 | Door double 3-point vertical hinged w/dual rotary latches. Note exterior D-Ring latches on primary and secondary doors.- painted. Location(s): [#LOC]. | $2,185 |
| 3300-0274 | Additional roll up door stop latches (PR) shall be mounted at a raised location aligned just above the dump. The raised latches/hooks shall not be included as part the door ajar circuit. Location(s): just above the dump for the door to be at the top of the dump. | $74 |
| 3305-0000 | Diamond plate generator cover. | $1,016 |
| 3305-0001 | Hosebed cover aluminum (2) piece with recessed handles SideStacker. Note: This option effects hose bed capacity. | $1,910 |
| 3305-0002 | Bi-Fold diamond plate cover for the crosslay area. Includes applicable grab handles and (2) hold downs. | $890 |
| 3305-0003 | Single diamond plate cover for the crosslay area. Includes applicable grab handle(s) and (2) hold downs. | $603 |
| 3305-0007 | Vinyl [#COL] hose bed cover with attached rear flap(s). | $868 |
| 3305-0008 | Vinyl [#COL] crosslay cover with attached side flaps. | $305 |
| 3305-0009 | Compartment underbody with slide-out tray.(**Obsolete** See Sales code 3380-0078) Includes drop down front door with push button latch(es). [#LOC] | $1,932 |
| 3305-0010 | Compartment underbody. Includes drop down front door with push-button latches. Locate [#LOC]. | $1,256 |
| 3305-0016 | Vinyl [#COL] speedlay side covers. | $204 |
| 3305-0017 | Nylon black strap on running board suction tray (EA). Location: [#LOC]. | $81 |
| 3305-0021 | Vinyl [#COL] hose bed cover with side bungee cords and attached rear flap(s). | $1,207 |
| 3305-0022 | Vinyl rear cover for diamond plate hose bed cover. Color: [#COL]. | $270 |
| 3305-0023 | Nylon black cargo net at rear of diamond plate or vinyl hose bed cover or similar. | $565 |
| 3305-0024 | Vinyl [#COL] side covers for diamond plate crosslay cover. | $191 |
| 3305-0025 | Nylon black cargo net on sides for crosslay cover. | $226 |

| Item No. | Description | |
|---|---|---|
| 3305-0027 | Nylon black cargo net on sides of speedlay. | $262 |
| 3305-0028 | Vinyl [#COL] cover for running board suction tray. Location: [#LOC]. | $191 |
| 3305-0029 | Nylon black strap on running board suction tray (EA). For use with rolled hose. Location: [#LOC] | $92 |
| 3305-0033 | Vinyl access cover for fill tower(s). | $201 |
| 3305-0034 | Vinyl [#COL] hose bed cover without attached rear flap(s). Requires rear cover option. | $735 |
| 3305-0038 | Vinyl [#COL] crosslay cover top only. | $259 |
| 3305-0040 | Nylon black strap with clip release on running board suction tray (EA). Location: [#LOC] | $143 |
| 3305-0041 | Vinyl [#COL] hosebed cover with side twist locks and bungee cord attached rear flap(s). | $1,207 |
| 3305-0047 | Cover aluminum/vinyl Bronto. Aluminum cover from above front of R5 compt back to slope vinyl following contour and back aluminum rear above R9. Note: This option effects hosebed capacity. Vinyl color: [#COL] | $1,546 |
| 3305-0060 | Diamond plate cover for running board suction tray(s). Includes push-button latches and gator grip. Location(s): [#LOC]. | $378 |
| 3305-0062 | Hosebed cover aluminum (1) piece with recessed handles SideStacker. Note: This option effects hose bed capacity. | $1,333 |
| 3305-0063 | Diamond plate cover(s) to protect cascade system valves and fittings located in the upper open storage area. | $580 |
| 3305-0064 | Nylon black strap with aluminum quick-release buckle for hose tray. Strap to attach to side walls of tray down low as applicable. Location: [#LOC]. | $117 |
| 3305-0066 | Vinyl cover for front headboard opening. Cover to be black with twist locks in the corners and snaps on the sides. | $259 |
| 3305-0067 | Vinyl cover for open storage area. Color: [#COL] | $735 |
| 3305-0068 | Vinyl [#COL] hosebed cover with attached rear flap(s). Cover to have snaps and velcro along front (no awning attachment) and sides. No twist locks. The rear bungees to be tie-in versus sown (use ilets sized to secure a looped and tied bungee). Bungee to be easily removed and replaced (by fire department) in field. | $1,469 |
| 3305-0070 | Diamond plate portable pump cover. | $1,237 |
| 3305-0080 | Diamond plate cover for running board suction tray(s). Includes push-button latches and gator grip. Includes cords to prevent covers from dropping to the ground when removed. Location(s): [#LOC]. | $417 |
| 3305-0093 | Vinyl fire retardent [#COL] hosebed cover with twist locks fasteners and bungee cord attached rear flap(s). | $1,400 |
| 3305-0094 | Fire Retardent Vinyl [#COL] crosslay cover with attached side flaps. | $607 |
| 3305-0124 | Vinyl [#COL] crosslay cover with attached side flaps. Cover to have velcro on the top IPO snaps. | $305 |
| 3305-0128 | Vinyl rear cover for diamond plate hosebed cover. Cover to be attached with snaps. Color: [#COL]. | $379 |
| 3305-0129 | Nylon black strap with airline style aluminum quick release buckle (each) for hose bed hose retention at rear. If hose bed divider is supplied there shall be a set on either side of divider to maintain tension on hose without interference of divider (if applicable). | $338 |
| 3305-0130 | Vinyl [#COL] crosslay cover with attached side flaps. Cover to have snaps and velcro on the top. No twist locks. The side bungees to be tie-in versus sown (use ilets sized to secure a looped and tied bungee). Bungee to be easily removed and replaced (by fire department) in field. | $516 |
| 3305-0142 | Vinyl red side covers for diamond plate crosslay cover. Covers to attach to the DP cover with snaps. The lower corners to have bungee cords. Cords are to be tie-in versus sown. Flaps to have eyelets sized to secure individual looped and tied bungees. Cords to be easily removed and replaced (by fire department) in field. | $312 |
| 3305-0143 | Vinyl rear cover for diamond plate hosebed cover. Cover to attach to the DP cover with snaps. The lower edge to have bungee cords. Cords are to be tie-in versus sown. Flap to have eyelets sized to secure individual looped and tied bungees. Cords to be easily removed and replaced (by fire department) in field. Color: Red | $395 |
| 3305-0147 | Nylon yellow strap with aluminum quick-release buckle for hose tray. Strap to attach to side walls of tray down low as applicable. Location: [#LOC]. | $117 |
| 3305-0149 | Nylon yellow cargo net on sides for crosslay cover. Cover to have snaps in place of bungees. | $317 |
| 3305-0150 | Nylon yellow cargo net at rear of diamond plate or vinyl hosebed cover. Cover to have snaps in place of bungees. | $605 |
| 3305-0154 | Single diamond plate hinged cover on top w/hinged stainless steel side panels for the crosslay area. Includes center grab handle. Liftup hinged side panels hinged across the top on each end with gasket around sides and bottom. Includes center grab handle above rubber hood latch located at lower center of side panels to hold closed. Non-aerial applications to be tagged as a non-stepping surface. | $1,347 |

| Item No. | Description | |
|---|---|---|
| 3305-0155 | Vertically hinged aluminum plate door includes gasket around side and bottom and latch at rear of body over hose chute for diamond plate hosebed cover. Door to match rear body finish. | $423 |
| 3305-0156 | One piece vinyl cover for driver's side upper control & lower pump panel opening. RLP application only. Top of vinyl cover outboard corners to have twist locks with velcro around permetier and weighted lower bottom. Color to be Red. | $534 |
| 3305-0165 | Aluminum plate rear cover for diamond plate hosebed cover. Drop down with gasket along sides and top. Includes 1/4 turn D-Ring latch. Hose bed aluminum cover shall be provided with an extrusion at rear of cover for door`s top gasket to seal against when door is closed. Door to match rear body finish. Note: on HP75/78 SideStacker when door is open adjacent doors must be closed. | $506 |
| 3305-0166 | Nylon black strap with aluminum quick-release buckle for hose tray. Strap to attach to side walls of tray down low as applicable. For use with rolled hose. Location: [#LOC]. | $128 |
| 3305-0168 | Vinyl [#COL] hose bed cover with side bungee cords without attached rear flap(s). Requires rear cover option. | $1,075 |
| 3305-0173 | Cargo Net for inside R3 compartment for containing cribbing in compartment when door is opened. Net to permenantly fasten on rearward wall just inside door opening and fasten with twist locks on forward wall just inside door opening. Cargo netting will be 3"x3" squares. See photo in shop order file. | $830 |
| 3305-0174 | Single diamond plate cover for the crosslay area. Includes applicable grab handle(s) and (2) hold downs. Cover to be embossed diamond plate. | $663 |
| 3305-0175 | Vinyl fire retardent [#COL] hose bed cover with attached rear flap(s). | $1,084 |
| 3305-0176 | Vinyl fire retardent [#COL] side covers for diamond plate crosslay cover. | $239 |
| 3305-0177 | Vinyl fire retardent [#COL] cover for running board suction tray. Location: [#LOC]. | $239 |
| 3305-0180 | Vinyl [#COL] hose bed cover with side bungee cords and attached rear flap(s). Includes large pull tabs to ease securing cover while wearing gloves. | $1,317 |
| 3305-0181 | Vinyl [#COL] hosebed cover with side twist locks with Velcro in between the twist locks and bungee cord attached rear flap(s). | $1,445 |
| 3305-0182 | Hold open retaining pin for aluminum crosslay (single or bi-fold) cover. Locate as required based off options on module. | $152 |
| 3305-0183 | Vinyl [#COL] crosslay cover with attached side flaps with bungee cord. | $380 |
| 3305-0184 | Vinyl [#COL] side covers for diamond plate crosslay cover. Includes large pull tabs to ease securing end flaps while wearing gloves. | $191 |
| 3305-0186 | Nylon red cargo net on sides for crosslay cover. | $252 |
| 3305-0187 | Nylon red cargo net at rear of diamond plate or vinyl hose bed cover. | $598 |
| 3305-0188 | Nylon black strap with footman loops and Velcro closure to secure hose. Location: [#LOC]. | $92 |
| 3305-0189 | The rear flap(s) of the hosebed cover shall be upgraded to add weight to the bottom of the rear vertical flap(s). | $540 |
| 3305-0191 | Vinyl rear cover for diamond plate hose bed cover using California Type 3 straps IPOS. Color: [#COL]. | $411 |
| 3305-0192 | Vinyl rear cover for hose chute(s). Color: [#COL]. Includes large pull tabs to ease securing cover while wearing gloves. | $270 |
| 3305-0193 | Hold open device(s) shall be provided. Rubber plunger type hold downs(s) shall hold the aluminum crosslay cover(s) (single or bi-fold) in the open position. | $210 |
| 3305-0194 | Bi-Fold diamond plate cover for the crosslay area. Includes applicable grab handles (2) hold downs and magnetic door ajar switch(s). | $1,012 |
| 3305-0200 | Vinyl [#COL] end covers for upper outboard hose storage of the hosebed. | $191 |
| 3305-0201 | Bi-Fold smooth plate cover for the crosslay area. Includes applicable grab handles and (2) hold downs. The cover to be painted black durabak. | $1,068 |
| 3305-0203 | Nylon black strap with aluminum quick-release buckle for tailboard hose tray(s). Strap to attach to side walls of tray down low as applicable. | $117 |
| 3305-0205 | Vinyl [#COL] side covers for diamond plate crosslay cover. Covers to attach to the DP cover with snaps. The lower corners shall be secured in place using California type straps (2) each side IPOS. These straps shall function to allow each strap to be looped around the horizontal crosslay roller on each side as part of the attach system. | $386 |
| 3305-0206 | Vinyl [#COL] hose bed cover using Nitrogen/Oxygen type straps (2) attach positions each side (4) total to secure the rear flap(s) IPOS. The upper straps shall be sewn in place leaving the ratchet clamp approximately half way or mid height of the rear flap(s). The bottom straps shall be fastened to a strap tie down mounted slightly above the horizontal handrail in line with the sewn in straps above (4) total top and (4) total bottom. The bottom straps shall feed directly above to the ratchet clamps (sewn in) as part of the attach/securing system. | $1,645 |

| Item No. | Description | |
|---|---|---|
| 3305-0207 | Vinyl [#COL] hose bed cover with side bungee cords for main hose bed storage area. Seperate cover w/snaps and attached rear flap for hose chute(s). Aerial application only. | $1,207 |
| 3305-0208 | Cargo net for inside compartment for containing cribbing in compartment when door is opened. Net to permanently fasten on rearward wall just inside door opening and fasten with buckle straps on forward wall just inside door opening. Cargo netting will be 3" x 3" squares. Location: [#LOC]. | $830 |
| 3305-0212 | Vinyl fire retardent [#COL] hosebed cover with twist locks fasteners and bungee cord attached rear flap(s). Cover to be partial hosebed cover leaving hosebed walkway area uncovered. To extend full length of the hosebed from roof top compartment on the side to divider against walkway in the middle and to hosebed storage pan rearward mounting flange at the front. | $1,400 |
| 3305-0214 | Nylon black cargo net at rear of diamond plate or vinyl hose bed cover. Notched for hosebed storage compartment(s) and door(s) as required. | $565 |
| 3305-0215 | Vinyl [#COL] hose bed cover with attached rear flap(s). Cover to have snaps and velcro along front (NO awning attachment) and velcro along sides. No twist locks. | $868 |
| 3305-0217 | Vinyl [#COL] hosebed cover with attached rear flap(s). Cover to have bungees on sides ipo velcro. Bungee to be easily removed and replaced (by fire department) in field. | $1,469 |
| 3305-0221 | Liftup hinged diamond plate side panels for single diamond plate crosslay cover. Hinged across the top on each end with gasket around sides and bottom. Includes center grab handle above butterfly latch located at lower center of side panels to hold closed. | $748 |
| 3305-0222 | Vinyl rear cover for diamond plate hosebed cover. Cover to be attached with bungee cords at all attachment positions. Color: [#COL]. | $383 |
| 3305-0223 | Nylon black cargo net on sides of speedlay. Cover to be attached with bungee cords at all attachment positions. | $328 |
| 3305-0227 | Vinyl fire retardant rear cover for diamond plate hose bed cover. Color: [#COL]. | $296 |
| 3305-0228 | Fire Retardent Vinyl [#COL] side covers for diamond plate crosslay cover. | $381 |
| 3305-0235 | Booster Reel Cover. Cover to be .125" diamond plate and shall include hinged lid for top access with 1.5" lip all around gas shock hold open and (2) butterfly latches one on each end. A slot shall also be provided with 1.5" diameter stainless steel rollers for hose to fed through. Location: [#LOC].. | $881 |
| 3305-0237 | E-One fabricated enclosure shall be provided for the Haskel Booster Pump. Cover to be .125" diamond plate and shall include hinged lid for top access with 1.5" lip all around and (2) butterfly latches one on each end. Location: L4 compartment top offset forward. | $881 |
| 3305-0238 | Vinyl [#COL] hose bed covers with attached rear flaps. Two Seperate covers for bi-level hose bed sides stepped to clear overhead rack assembly. | $1,042 |
| 3305-0241 | Bi-fold style diamond plate cover for running board suction tray(s) hinged outboard from pump panels. Includes butterfly latches and gator grip. Location(s): [#LOC]. | $417 |
| 3305-0243 | Vinyl [#COL] crosslay cover with attached side flaps. Includes side snaps. | $379 |
| 3305-0246 | Smooth plate aluminum rear covers for the application of applicable chevrons mounted on the ends of the top outboard hose bed storage areas. Includes vertical hinge each side and a non-locking D-ring latch. Doors to be wired to door ajar circuit. Storage areas to be open to the top and shall be used for misc. equipment to be added/secured as applicable to NFPA by customer/dealer. Not identified to be used as loose hose storage. | $808 |
| 3305-0247 | Diamond plate vertically hinged door each side of the 2.5" crosslay hinge rearward. Includes thumb latch and wiring for door ajar switch. | $375 |
| 3305-0259 | Nylon black cargo net at rear of diamond plate or vinyl hose bed cover w/(2) aluminum quick release buckles. | $793 |
| 3305-0260 | Nylon black cargo net end flaps w/(2) aluminum quick release buckles on each side for crosslay cover. | $564 |
| 3305-0262 | Cover aluminum (3) piece with recessed handles SideStacker. Note: This option effects hose bed capacity. | $2,860 |
| 3305-0263 | Removable diamond plate cover for the crosslay area. Includes applicable grab handles and aluminum fabricated brackets with safety pins for hold downs. | $890 |
| 3305-0264 | Diamond plate cover for running board suction tray(s). Includes butterfly latches and gator grip. Includes cords to prevent covers from dropping to the ground when removed. Location(s): [#LOC]. | $417 |
| 3305-0265 | Vinyl rear cover for diamond plate hose bed cover. The top of the cover shall be mechanically attached to the rear hose bed cover extrusion with over lapping flaps in the center secured with velcro. The lower portion of the cover shall be secured in place with heavy duty nylon straps. The lower portion fasteners shall be mounted at pick up. Color: Red. | $395 |
| 3305-0269 | Vinyl rear cover for hose chute(s). Color: [#COL]. | $204 |

| Item No. | Description | |
|---|---|---|
| 3305-0274 | Vinyl black hose bed cover with attached rear flap on one side only to the top of the hose bed storage compartment. | $868 |
| 3305-0276 | Vinyl red crosslay cover top with attached nylon red cargo net on each side of cover. | $582 |
| 3305-0277 | Vinyl rear cover for diamond plate hose bed cover. Cover shall attach to hard cover optioned and have weighted bottom edge with additional shock cord attaching cords to comply with NFPA current version. Cover shall be split in the center along hard cover center or divider at center of hose bed. D&S custom covers brand NFPA compliant with reflective yellow and red "A" chevrons. | $869 |
| 3305-0280 | Nylon black strap with aluminum quick-release buckle for hose tray. Location: to be mounted at final inspection. [#LOC]. | $117 |
| 3305-0282 | Vinyl black hose bed cover with nylon black strap with footman loops and Velcro closure to secure hosebed cover without attached rear flap(s). Requires rear cover option. | $1,075 |
| 3305-0283 | Nylon black cargo net at rear of diamond plate or vinyl hosebed cover. Cover to have nylon black strap with footman loops and Velcro closure to secure hosebed end flap. | $605 |
| 3305-0294 | Vinyl red cover for fire extinguisher box. Cover to attach to the shelf lip with snaps. The lower corners to have bungee cords. | $312 |
| 3305-0297 | Crosslay cover to be a diamond plate three (3) piece cover. Forward and middle covers w/center section below aerial fixed with hinged outside panels above swivel connections. Full width hinged cover over rearward dry lay storage area (hinged forward). Includes applicable grab handles and (4) hold downs. | $1,807 |
| 3305-0300 | Nylon black cargo net on sides for crosslay cover. Note: Side flaps are to be interchangeable from side to side. | $324 |
| 3305-0304 | Crosslay cover to be a diamond plate three (3) piece cover. Forward crosslay cover (hinged forward) and second crosslay cover (hinged rearward) are each a two piece cover which includes a separate cover for access to swivel connections when the aerial is bedded. One piece cover over rearward dry lay storage area (hinged forward). Includes applicable grab handles and (6) butterfly latches. | $1,807 |
| 3305-0305 | Vinyl [#COL] hose bed cover with attached rear flap(s). End flap(s) to have nylon webbing straps with stainless steel spring buckles and footman loops to secure cover closed. | $912 |
| 3305-0306 | Vinyl Black hosebed cover with twist locks fasteners and nylon strap attached rear flap(s). | $911 |
| 3305-0307 | Vinyl [#COL] hose bed cover with attached rear flap(s). Cover to have snaps and velcro along front (NO awning attachment) and velcro along sides. Rear of cover to be attached with snaps (no bungee). | $868 |
| 3305-0310 | The mechanical attachments of the side crosslays and rear hosebed covers to be small clip (black) IPO bungees. | $393 |
| 3305-0311 | Vinyl [#COL] hose bed cover with side bungee cords and attached rear flap(s). Cover to accommodate main hose bed and side auxiliary hose bed above ladder tunnel. Top of cover to be one piece and rear cover to be one piece with two flaps to cover each storage area. | $1,593 |
| 3305-0312 | Smooth plate rear cover for vinyl hosebed cover. Cover to have horizontally hinged door (wired to door ajar) w/push-button latch and painted job color. | $582 |
| 3305-0314 | Nylon black cargo net crosslay cover with attached side flaps. | $417 |
| 3305-0315 | Bi-Fold diamond plate cover w/notch to clear waterway for the crosslay area. Includes applicable grab handles and (2) hold downs. Non-aerial applications to be tagged as a non-stepping surface. Notch is to allow cover to open while aerial is nested. | $925 |
| 3305-0316 | Embossed diamond plate cover at top of body over Generator/APU. Includes hinged access door and sliding door over vent and baffle around radiator to prevent re-circulation. Generator's radiator air flow directed into pump module for heating pump/plumbing during cool climate and redirected out during warm climate. | $1,915 |
| 3305-0317 | Vinyl [#COL] hose bed cover with attached rear flap(s). Rear face of body to have twist locks to hold down rear flap(s). | $868 |
| 3305-0319 | D&S brand vinyl hose bed cover with removable attached rear flap(s). Top cover to be heavy duty red vinyl with shock cord attaching system and rear nylon buckles with straps to attach rear flap. Rear flap to be matching heavy duty red vinyl with shock cords and mating buckles. Rear flap to feature weighted bottom skirting and have Yellow reflective letters centered "WEMA" as large as possible with weighted bottom per application. | $1,342 |
| 3305-0320 | OBSOLETE - USE 3305-0387 D&S brand nylon red cargo net on sides for cross lay cover with shock cord attaching system. One pair of covers. | $340 |
| 3305-0326 | OBSOLETE ON ALL TRUCKS ORDERED AFTER MAY 2016 - USE 3305-0387 INSTEAD D&S Custom Covers brand heavy duty 22 oz. Nylon black cargo net on sides for speed lay with shock cord attaching system. One pair of covers. | $340 |

| Item No. | Description | |
|---|---|---|
| 3305-0327 | Hose chute access door at rear of body. Diamond plate vertically hinged door hinged on officer side of hosebed chute for door to swing outboard. Includes push-button latches and hinges that hold door in open position. Note door to work in conjunction with hose bed cover. Wired to door ajar. Aerial application only. | $609 |
| 3305-0331 | Single diamond plate cover for the crosslay area. Includes (2) hold downs. NO grab handle(s) on cover. | $603 |
| 3305-0332 | Vinyl red flap for ladder tunnel opening at rear of body with twist lock fasteners. | $328 |
| 3305-0334 | Vinyl [#COL] hose bed cover with attached rear flap(s) with straps and 1in. Delrin buckles. | $917 |
| 3305-0335 | Vinyl [#COL] speed lay side covers with 1 inch Delrin buckles. | $243 |
| 3305-0339 | Vinyl red crosslay cover top with attached nylon black cargo net on each side of cover. Vinyl cover to be attached with twist locks only (No snaps). | $582 |
| 3305-0343 | Center hosebed aluminum/vinyl cover without center divider. Includes (2) piece aluminum diamond plate cover from the front of the hosebed back to just ahead of the "V" deflector vinyl covers between the rear of the dia plt covers and the forward ends of the hose chutes fill tower access door(s) gas shocks positive hold opens/hold closed at rear (2) frt grab handles and (2) rear grab handles. Note: Cover to be level no pitch. Aerial Application only. | $3,900 |
| 3305-0345 | Nylon black strap with aluminum quick-release buckle for hose tray. Strap to attach to side walls of tray as high as applicable. Location: [#LOC]. | $117 |
| 3305-0346 | Nylon black cargo net w/(2) pull straps and aluminum quick release buckles on each side for crosslay cover. Cargo net end flaps to be fasten at the front of the crosslay with twist locks and at the rear with the female portion of buckle at top and bottom corners. Includes (2) 2" aluminum quick release buckles (female end) to be attached at top and bottom of the cargo net on the rear of the crosslay opening to hold cargo net in place with the male portion attached to the module. Orange 1" nylon pull strap to be attached to the paddle to release for quick drop down access. Note pull straps to be attached to the crosslay with approx 5" hand loop at end and velcro on the back to hold in place during travel. | $564 |
| 3305-0350 | D&S brand heavy duty [#COL] vinyl cover for running board suction tray. Location: [#LOC]. | $385 |
| 3305-0351 | D&S Custom Covers brand heavy duty [#COL] vinyl cover on sides for cross lay cover with shock cord attaching system. One pair of covers. | $348 |
| 3305-0352 | D&S brand 22 oz heavy duty [#COL] vinyl hose bed cover with attached vinyl rear flap. Top cover fastened at the front and both sides using patented shock cord system. Rear flap with weighted end attached with nylon buckles at bottom and attached to the top cover using a zipper. | $1,289 |
| 3305-0353 | Heavy duty black nylon cargo netting with airline style quick release buckles shall be installed at the rear apparatus hose bed. | $757 |
| 3305-0354 | A heavy duty black nylon strap (EACH) with an airline style aluminum quick release buckle shall be provided for hose retention inside crosslay/speedlay as applicable. The strap shall be attached by looping beneath slats or drainage slots as applicable beneath respective hose storage areas. | $161 |
| 3305-0355 | Heavy duty black nylon cargo netting with airline style quick release buckles shall be installed on either side of the crosslay/speedlay hose storage areas. | $418 |
| 3305-0357 | A heavy duty black nylon strap (EACH) with an airline style aluminum quick release buckle shall be provided for hosebed hose retention. The strap shall be attached by looping beneath hosebed extrusions and beneath respective hose storage areas. | $242 |
| 3305-0360 | Embossed diamond plate (No gator grip) cover for running board suction tray(s). Includes push-button latches. Cover shall prevent water intrusion in the tray. Location(s): [#LOC]. | $416 |
| 3305-0363 | Vinyl rear cover for ROM power hose bed cover. Color: Red | $444 |
| 3305-0364 | Vinyl red cover for fire extinguisher box. Cover to attach with snaps. The lower corners to have bungee cords. | $312 |
| 3305-0367 | Black vinyl speedlay cover. Includes (2)single piece covers(1 each side). The cover to be attached at the bottom with slide and pull-down bungees at the top. | $564 |
| 3305-0369 | Diamond plate hosebed deflector 18" long located at front of hosebed area. Leading edge to be tapered hinged along forward edge with stainless steel piano hinge fastened with quarter turn latches. Includes a black vinyl hose bed cover attached to trailing edge of the deflector using Velcro and extending to the rear of the hose bed secured with side Velcro attachment. Rear of hose bed has cargo net secured to drivers side and quick release buckles on officer side. | $2,452 |

| Item No. | Description | |
|---|---|---|
| 3305-0371 | OBSOLETE: USE 3305-0392 (except SO# 140357) D&S Custom Covers brand heavy duty 22 oz. vinyl hose bed cover with removable attached rear flap(s). Top cover to be heavy duty black vinyl with shock cord attaching system and rear nylon buckles with straps to attach rear flap. Rear flap to be heavy duty black cargo net with shock cords and mating buckles. Rear flap to feature weighted bottom skirting. | $1,289 |
| 3305-0373 | D&S brand 22 oz heavy duty [#COL] vinyl hosebed rear flap. For use with aluminum hosebed cover (added seperately). Rear flap with weighted end attached with nylon buckles at bottom and attached to the top cover using a zipper. | $666 |
| 3305-0374 | D&S Custom Covers brand heavy duty black cargo net on sides for combined speed lay cover with bottom footman's loop attaching points and top seatbelt style pull release straps. Top seat belt style buckles to feature a lanyard pull attached to each corner seatbelt release to extend down and join to a common pull point. Pulling lanyard shall release both buckles and allow net to drop down for rapid deployment on-scene One pair of covers sized to allow for a single cover each side over two speed lay chutes. | $666 |
| 3305-0376 | Nylon black cargo net at rear of truck for lower storage. | $565 |
| 3305-0379 | Vinyl cover located forward pump module open storage area. Includes mechanical hold-downs on top outer corners and quick release side flap hold downs. Cover color: Black | $300 |
| 3305-0381 | D&S brand heavy duty vinyl [#COL] crosslay cover with attached side flaps. | $573 |
| 3305-0383 | Vinyl Black hosebed cover with attached rear flap(s). Cover to have Twist locks and velcro along front and sides (no awning attachment) No snaps. The rear bungees to be tie-in versus sown (use ilets sized to secure a looped and tied bungee). Bungee to be easily removed and replaced (by fire department) in field. | $1,469 |
| 3305-0384 | Red & Lime Yellow "A" pattern chevron sewn with PTFE thread on D&S Custom Covers brand hosebed rear flap (cover added seperately). | $408 |
| 3305-0385 | Reflective [#COL] letters as large as possible (up to 12") inlayed sewn with PTFE thread on D&S Custom Covers brand hosebed rear flap (cover added seperately). | $58 |
| 3305-0386 | Reflective [#COL] letters as large as possible (up to 20") inlayed sewn with PTFE thread on D&S Custom Covers brand hosebed rear flap (cover added seperately). | $98 |
| 3305-0387 | D&S brand [#COL] cargo net covers (pair) for crosslay sides. To be used with aluminum crosslay cover. Side covers to be attached to the aluminum top cover using twist locks. Bottom of the side covers attached using patented shock cord system with pull tabs. | $468 |
| 3305-0388 | D&S brand [#COL] cargo net covers (pair) for speedlay sides. One pair shall cover one speedlay opening. Cover attached using patented shock cord system with pull tabs on top corners and at the center and nylon buckles at the bottom corners. | $384 |
| 3305-0389 | D&S brand [#COL] cargo net covers (pair) for speedlay sides. All speedlay openings covered using a single cover. Cover attached using patented shock cord system with pull tabs on top corners of top most speedlay and in between each speedlay and nylon buckles at the bottom corners of bottom most speeday. | $612 |
| 3305-0392 | D&S brand 22 oz heavy duty [#COL] vinyl hose bed cover with attached cargo net rear flap. Top cover fastened at the front and both sides using patented shock cord system. Rear flap attached with nylon buckles at bottom and attached to the top cover using a zipper. | $1,299 |
| 3305-0393 | D&S brand 22 oz heavy duty vinyl boot over the water fill tower. Attached to and same color as the main vinyl hosebed cover. | $261 |
| 3305-0394 | D&S brand [#COL] cargo net covers for speedlay front opening. One cover per opening. Cover attached using patented shock cord system with pull tabs on top corners and in between corners and nylon buckles at the bottom corners. | $384 |
| 3305-0395 | D&S brand [#COL] cargo net cover for speedlay front openings. One cover for all openings. Cover attached using patented shock cord system with pull tabs on top corners and in between corners and nylon buckles at the bottom corners. | $612 |
| 3305-0396 | D&S brand 22 oz heavy duty [#COL] vinyl covers for speedlay front opening. One cover per opening. Cover attached using patented shock cord system with pull tabs on top corners and in between corners and nylon buckles at the bottom corners. | $384 |
| 3305-0397 | D&S brand 22 oz heavy duty [#COL] vinyl cover for speedlay front openings. One cover for all openings. Cover attached using patented shock cord system with pull tabs on top corners and in between corners and nylon buckles at the bottom corners. | $612 |
| 3305-0398 | D&S brand 22 oz heavy duty 2 piece [#COL] vinyl hosebed rear flap. For use with aluminum hosebed cover (added seperately). Rear flap with weighted end attached with seat belt style buckles at bottom and attached to the top with twist locks. | $857 |
| 3305-0399 | D&S brand heavy duty [#COL] cargo hosebed rear flap. Single cover on Aerials 2 piece cover on all other products. For use with aluminum hosebed cover (added seperately). Rear flap with nylon buckles at bottom and attached to the top with twist locks. | $857 |

| Item No. | Description | |
|---|---|---|
| 3305-0400 | D&S brand [#COL] crosslay cover with cargo net covers (pair) for crosslay sides. Side covers to be attached to the vinyl top cover using twist locks. Bottom of the side covers attached using patented shock cord system with pull tabs. | $732 |
| 3305-0403 | D&S brand [#COL] vinyl covers (pair) for crosslay sides. To be used with aluminum crosslay cover. Side covers to be attached to the aluminum top cover using twist locks. Bottom of the side covers attached using seat belt buckles. | $646 |
| 3305-0404 | D&S brand 22 oz heavy duty [#COL] vinyl covers (pair) for speedlay sides. Cover attached using twist locks on top corners and seat belt buckles at the bottom corners. | $646 |
| 3305-0405 | D&S brand [#COL] cargo net covers (pair) for speedlay sides. Cover attached using twist locks on top corners and nylon buckles at the bottom corners. | $468 |
| 3305-0407 | Smooth plate painted job color horizontally hinged door each side of the speedlay. Includes thumb latch and wiring for door ajar switch. | $375 |
| 3305-0410 | Vinyl [#COL] hose bed cover with attached rear flap(s). Cover to be held down with Quarter Turn fasteners ilo snaps. No Velcro to be used. | $868 |
| 3310-0000 | Compartments driver side tandem axle HP SideStacker. Includes rescue style compartments. | $40,129 |
| 3310-0001 | Compartments driver side tandem axle HP SideStacker. Includes rescue style extended height compartments. | $42,705 |
| 3310-0002 | Compartments driver side CR100/95 platform SideStacker with 300g tank. Includes rescue style compartments. | $39,213 |
| 3310-0003 | Compartments driver side CR100/CR137/95 platform SideStacker with 300g tank. Includes rescue style extended height compartments. | $42,070 |
| 3310-0004 | Compartments officer side tandem axle HP SideStacker. Includes low side compartments with full length extended hosebed. Decreases height of compartments R1 and R2. | $24,586 |
| 3310-0005 | Compartments officer side tandem axle HP SideStacker. Includes low side compartments with full length hosebed. Decreases height of compartments R1 and R2. | $23,155 |
| 3310-0006 | Compartments officer side tandem axle HP SideStacker. Includes rescue style compartments ahead of wheel well with extended hosebed. | $28,834 |
| 3310-0007 | Compartments officer side tandem axle HP SideStacker. Includes rescue style compartments ahead of wheel well with standard hosebed. | $27,402 |
| 3310-0008 | Compartments officer side tandem axle HP SideStacker. Includes rescue style extended height compartments ahead of wheel well with extended hosebed. | $31,017 |
| 3310-0009 | Compartments officer side tandem axle HP SideStacker. Includes rescue style extended height compartments ahead of wheel well with standard hosebed. | $32,471 |
| 3310-0010 | Compartments officer side CR100/95 platform SideStacker with 300g tank. Includes low side compartments with full length extended hosebed. Decreases height of compartments R1 and R2. | $24,254 |
| 3310-0011 | Compartments officer side CR100/95 platform SideStacker with 300g tank. Includes low side compartments with full length hosebed. Decreases height of compartments R1 and R2. | $23,000 |
| 3310-0012 | Compartments officer side CR100/95 platform SideStacker with 300g tank. Includes rescue style compartments ahead of wheel well with extended hosebed. | $27,746 |
| 3310-0013 | Compartments officer side CR100/95 platform SideStacker with 300g tank. Includes rescue style compartments ahead of wheel wells with standard hosebed. | $26,486 |
| 3310-0014 | Compartments officer side CR100/CR137/95 platform SideStacker with 300g tank. Includes rescue style extended height compartments ahead of wheel well with extended hosebed. | $30,060 |
| 3310-0015 | Compartments officer side CR100/95 platform SideStacker with 300g tank. Includes rescue style extended height compartments ahead of wheel well with standard hosebed. | $28,803 |
| 3310-0016 | Crosslay with backboard compartment RLP. Includes (2) 1.5" single stacked x-lays for 200' - 1.75" DJ each (1) 2.5" single stacked x-lay for 200' - 2.5" DJ (all 5.5" wide less plumbing) x-lay rollers on each end and 8" wide backboard compartment located ahead of x-lays w/diamond plate door on each end. | $3,220 |
| 3310-0017 | Auxiliary jack pad 24X24 (PR) with side mounted handle. Includes mounting brackets. | $1,176 |
| 3310-0018 | Auxiliary jack pads 24X24 (4). Includes pads with side mounted handle and mounting brackets to store (2) each side of the body next to front drop down jacks. | $1,679 |
| 3310-0019 | Auxiliary jack pads 30X30 (4). Pads to have side mounted handles. Includes (4) mounting brackets. | $2,545 |
| 3310-0020 | Step fold-down rear (EA). | $937 |
| 3310-0021 | Step flop down rear 24" wide rung type (EA). | $577 |
| 3310-0022 | Step flop down rear 12" wide rung type (PR). | $973 |
| 3310-0023 | Step pocket flop down rear (PR). | $1,171 |
| 3310-0024 | Tailboard 12" bolt on-G067. Includes handrail below hosebed and (1) underbody ground light on the officer's side. | $727 |

| Item No. | Description | |
|---|---|---|
| 3310-0026 | Contoured beavertail compartments. Door opening raised for warning light. | $3,763 |
| 3310-0027 | SCBA bottle storage with flat plate door (PR). Locate above forward outriggers. | $940 |
| 3310-0028 | Auxiliary jack pad 26X26 (4) with side mounted handle. Includes (4) mounting brackets. | $2,013 |
| 3310-0029 | Auxiliary jack pad 26X26 (4) with side mounted handle. Includes (2) double mounting brackets. | $2,013 |
| 3310-0030 | Crosslay with cord reel compartment RLP. Includes (2) 1.5" single stacked x-lays for 200' - 1.75" DJ each (1) 2.5" single stacked x-lay for 200' - 2.5" DJ (all 5.5" wide less plumbing with 2.5"to rear) x-lay rollers on each end and cord reel comparments located each side ahead of x-lays w/lift-up diamond plate door. | $3,079 |
| 3310-0031 | Transverse/cord reel compartment without pump RLP. Includes transverse compartment with painted vertically hinged doors and cord reel compartments located each side ahead of transverse w/lift up dia plt door. | $3,180 |
| 3310-0032 | Recessed tubes for (6) pike poles. Not available on HP75 SideStacker. | $648 |
| 3310-0033 | Pike pole/ladder storage. Available on HP75 SideStacker only. The access door to match the rear body finish. | $648 |
| 3310-0034 | Pikepole storage recessed for (4) poles. Bronto 118 only. Includes (2) recessed boxes at rear of box below tow eyes. Each box will have tubes for (1) 6' and (1) 8' pike pole. | $679 |
| 3310-0035 | Roll-up door with satin finish for rear ladder tunnel. | $1,203 |
| 3310-0036 | Rollup rear ladder compartment door with satin finish for SideStacker and NPNT aerial with side staircases (N/A on HP100P). Includes hinged ladder retention plate. | $1,826 |
| 3310-0037 | Rear ladder tunnel doors. Vertically hinged diamond plate. | $701 |
| 3310-0038 | Rear ladder tunnel door. Diamond plate lift up door to open 20 degrees past horizontal. | $743 |
| 3310-0040 | Notch compartment R2 in deep area above jack leg to allow for routing of hydraulic generator hoses. | $327 |
| 3310-0041 | Compartments driver side CR100/95 platform SideStacker with 500g tank. Includes rescue style compartments. | $39,213 |
| 3310-0042 | Compartments driver side CR100/95 platform SideStacker with 500g tank. Includes rescue style extended height compartments. | $42,070 |
| 3310-0043 | Compartments officer side CR100/95 platform SideStacker with 500g tank. Includes low side compartments with full length extended hosebed. Decreases height of compartments R1 and R2. | $24,254 |
| 3310-0044 | Compartments officer side CR100/95 platform SideStacker with 500g tank. Includes low side compartments with full length hosebed. Decreases height of compartments R1 and R2. | $23,000 |
| 3310-0045 | Compartments officer side CR100/95 platform SideStacker with 500g tank. Includes rescue style compartments ahead of wheel well with extended hosebed. | $27,746 |
| 3310-0046 | Compartments officer side CR100/95 platform SideStacker with 500g tank. Includes rescue style compartments ahead of wheel wells with standard hosebed. | $26,486 |
| 3310-0047 | Compartments officer side CR100/95 platform SideStacker with 500g tank. Includes rescue style extended height compartments ahead of wheel well with extended hosebed. | $30,060 |
| 3310-0048 | Compartments officer side CR100/95 platform SideStacker with 500g tank. Includes rescue style extended height compartments ahead of wheel well with standard hosebed. | $28,803 |
| 3310-0049 | Auxiliary jack pad 24X24 (4) with side mounted handles. Includes welded mounting brackets. | $2,350 |
| 3310-0050 | Crosslay triple 5.5" wide single stack to hold up to 200' of 2.0" DJ (each) or 150'-200' 2.5" DJ (each). Includes storage pan to rear of crosslays | $3,670 |
| 3310-0051 | Crosslay double to hold up to 200' of 2.0" DJ (each). Includes storage pan to rear of crosslays. | $2,705 |
| 3310-0052 | Crosslay double 5.5" wide single stack to hold up to 200' of 2.0" DJ (each) or 150'-200' 2.5" DJ (each). Includes storage pan to rear of crosslays (if applicable). | $2,705 |
| 3310-0053 | Crosslay double to hold up to 400' of 2.0" DJ (each). Includes storage pan to rear of crosslays. | $3,171 |
| 3310-0054 | Crosslay triple to hold up to 200' of 2.0" DJ (each). Includes storage pan to rear of crosslays. | $3,670 |
| 3310-0055 | Crosslay double w/dry lay. Includes (2) 5.5" wide single stack crosslays to hold up to 200' of 2.0" DJ or 150'-200' 2.5" DJ (each) and (1) 11" wide dry lay for up to 300' of 3.0" DJ. Includes storage pan to rear of crosslays. | $3,670 |
| 3310-0056 | Crosslay Double (1) Single (1) Double Stacked Midmount. Forward lay 5.5"W x 18"D to hold up to 200' of 2" DJ. Rearward lay 11.25"W x 18"D to hold up to 600' of 1.75" or 350' of 2.5" DJ. Midmount only. | $2,722 |
| 3310-0057 | Crosslay double to hold up to 400' of 2.0" DJ (each). | $2,722 |
| 3310-0058 | Crosslay triple 5.5" wide single stack to hold up to (2) 200' of 2.0" DJ (each) and up to 200' 2.5" DJ. | $2,905 |
| 3310-0059 | Storage box at rear of body for handheld jack control 12W x 13H x 8D. Locate below extended top step. Material to be the same as rear body surface. | $345 |
| 3310-0060 | Boxed out rear ladder tunnel doors. Vertically hinged diamond plate. | $1,101 |

| Item No. | Description | |
|---|---|---|
| 3310-0061 | Crosslay triple (2) 4.25" wide single stack to hold up to 200' of 2.0" DJ (each) and (1) 5.5" wide to hold up to 150'-200' 2.5" DJ. Includes storage pan to rear of crosslays | $3,670 |
| 3310-0062 | Rectangular beavertail compartments with double pan door opening to outside. Door opening raised for warning light. | $3,767 |
| 3310-0063 | Jack leg covers diamond plate. Includes (4) diamond plate extension covers and (4) diamond plate fixed covers. Access doors on covers to match the outrigger covers. | $2,232 |
| 3310-0064 | Jack leg covers painted job color. Includes (4) painted extension covers and (4) painted fixed covers. Access doors on covers to match the outrigger covers. | $3,354 |
| 3310-0065 | Jack leg covers. Includes (4) polished stainless steel extension covers and (4) painted fixed covers. Access doors on fixed covers to match the fixed outrigger cover material finish. | $3,682 |
| 3310-0066 | Cover plate over hydraulic generator lines located towards front of compartment below generator. | $253 |
| 3310-0067 | Roll-up door for rear ladder tunnel painted job color. | $1,790 |
| 3310-0068 | Rollup rear ladder compartment door for SideStacker aerial painted job color. Includes hinged ladder retention plate. | $2,412 |
| 3310-0069 | Rear ladder tunnel doors. Vertically hinged smooth plate to match rear body finish. | $883 |
| 3310-0070 | Rear ladder tunnel door. Lift-up door to open 20 degrees past horizontal (degrees may be reduced due to other options). Door will match rear body finish. | $925 |
| 3310-0071 | Boxed out rear ladder tunnel doors. Vertically hinged smooth plate. Doors to match rear body finish. | $1,346 |
| 3310-0072 | Compartments driver side HP100 Platform SideStacker with 300g tank. Includes rescue style extended height compartments. The door on small compts next to rear outrigger to match wheelwell. | $42,070 |
| 3310-0073 | Compartments officer side HP100 Platform SideStacker with 300g tank. Includes rescue style extended height compartments ahead of wheel well with extended hosebed. | $30,060 |
| 3310-0074 | Compartments officer side HP100 Platform SideStacker with 300g tank. Includes rescue style extended height compartments ahead of wheel well compartment over forward tandem and extended hosebed. | $31,282 |
| 3310-0075 | Upper dunnage area extension 34 x 58 diamond plate. | $556 |
| 3310-0076 | Body wheelwell compartments (4) approx 24" W x 6" H x maximum depth permissible without interference with hydraulic line(s) reservoir(s) etc. A gasketed drop down door shall be installed on each compartment. Door material to match wheelwell finish. | $1,420 |
| 3310-0079 | Stainless steel trim on bottom edge of rear ladder tunnels turntable access and pike pole compartment openings. | $499 |
| 3310-0080 | Crosslay triple (2) 5.5" wide single stack to hold up to 200' of 2.0" DJ (each) and (1) 10.5" wide to hold up to 300'-400' of 2.5" DJ. Includes storage pan to rear of crosslays | $3,670 |
| 3310-0081 | Jack leg opening cover diamond plate (4). Includes diamond plate outrigger cover and diamond plate filler panel. | $840 |
| 3310-0082 | Wall at rear of upper open storage area bolt-in 3/16 Dia Plt. with diamonds facing rear. May require notching for lift cylinder clearance if applicable. | $380 |
| 3310-0083 | Rear double beavertail handrails (outer handrail only) to be extended up and wrap up over top of body approx 10". | $211 |
| 3310-0084 | All tags on body to be mechanically attached with S/S screws and nuts. | $813 |
| 3310-0085 | Compartment at right rear of body for storage of tethered horn control. Locate above pike pole compartment. | $374 |
| 3310-0087 | Boxed out rear ladder tunnel doors. Vertically hinged diamond plate with lowered D-rings and gas shocks. Includes recess above doors for directional light. | $1,673 |
| 3310-0089 | Compartments officer side CR100/95 platform SideStacker with 300g tank. Includes rescue style extended height compartments ahead of wheel well with extended hosebed and optional R3 compartment above forward tandem. | $31,282 |
| 3310-0095 | Rear ladder tunnel doors. Vertically hinged diamond plate with slam latch style d-ring assemblies. | $774 |
| 3310-0096 | Doors for rear master and jack control controls. Doors will match rear body finish. | $404 |
| 3310-0099 | Jack leg covers painted job color. Includes (2) painted extension covers and (2) painted fixed covers. | $1,680 |
| 3310-0100 | Enclosed pump panels. Upper door opening stepped up to allow crosslays to be accessed from inside compartment. Includes hinged diamond plate crosslay cover. | $8,492 |
| 3310-0101 | Smooth plate fixed panels rear of tandem axle painted job color. | $189 |

| Item No. | Description | |
|---|---|---|
| 3310-0102 | Recessed storage for (6) pike poles. Includes box at upper left rear of body for (2) D-handled 6' poles (1) recessed tube on the left side below 6' poles for a 12' pole and (3) recessed tubes below right side hose chute for (2) 10' poles and (1) 12' pole. For use with center HB 4-jack aerial body with sgl chute. | $1,557 |
| 3310-0103 | Crosslay single w/dry lay. Includes (1) dbl stack for 200' of 2.0'' DJ in forward lay and (1) 20'' wide dry lay for up to 400' of 2.5'' DJ. Includes storage pan to rear of crosslays. | $3,670 |
| 3310-0104 | Crosslay double forward lay 7.5" w x 18" d to hold up to 400' of 2" DJ. Rearward lay 9.25" w x 18" d to hold 350' of 2.5" DJ. Midmount only. | $2,722 |
| 3310-0105 | Crosslay double w/dry lay. Includes (2) 4.25" wide single stack crosslays to hold up to 200' of 2.0" DJ (each) and (1) 5.5" wide dry lay for up to 200' of 2.5" DJ. Includes storage pan to rear of crosslays. | $3,670 |
| 3310-0106 | Rear ladder tunnel doors. Horizontally hinged drop down diamond plate. | $701 |
| 3310-0107 | Transverse compartment floor to be extended out to door opening in L1/R1. | $843 |
| 3310-0108 | Pan shallow for generator. Locate at front of open storage area. | $639 |
| 3310-0109 | Auxiliary jack pad 24X24 (4) with side mounted handles. Includes mounting brackets that are bolted to body. | $2,760 |
| 3310-0110 | Boxed out rear ladder tunnel doors. Horizontally hinged diamond plate (drop down). | $1,101 |
| 3310-0111 | Recessed tubes for (4) pike poles. Not available on HP75 SideStacker. | $519 |
| 3310-0113 | Upper body side panels to be smooth plate painted job color IPO D.P. | $760 |
| 3310-0114 | Crosslay triple (2) 5.5" wide single stack to hold up to 200' of 2.0" DJ or 150'-200' 2.5" DJ (each) and (1) 11" wide double stack for up to 300' of 3.0" DJ. Includes storage pan to rear of crosslays. | $3,670 |
| 3310-0115 | Jack leg covers polished stainless steel. Includes (2) polished stainless steel extension covers and (2) painted fixed covers. | $1,841 |
| 3310-0116 | Transverse compartment floor to be extended out to approx 4" from inside of door opening in L1. | $560 |
| 3310-0117 | Pikepole/backboard storage. Available on HP75/78 SideStacker only. The access door to match the rear body finish. | $648 |
| 3310-0118 | Crosslay triple w/dry lay. Includes (2) 5.5" wide single stack crosslays to hold up to 200' of 2.0" DJ (each) (1) 6" wide single stack crosslay to hold up to 150'-200' 2.5" DJ and (1) 6" wide dry lay for up to 150-200' of 3.0" DJ. Includes storage pan to rear of crosslays if applicable. | $4,636 |
| 3310-0119 | Auxiliary jack pad 24X24x1.5 poly (4) with textured finish and rope handles. Includes mounting brackets (welded on). | $3,142 |
| 3310-0120 | Transverse compartment floor to be extended out to door opening in R1. | $422 |
| 3310-0123 | Crosslay double w/dry lay. Includes (2) 5.5" wide single stack crosslays to hold up to 200' of 2.0" DJ or 150'-200' 2.5" DJ (each) and (1) 5.5" wide dry lay for up to 150-200' of 2.5" DJ. Includes storage pan to rear of crosslays. | $3,670 |
| 3310-0124 | Raised lip 3" high 3/16" dia plt on each end of center raised transverse compartment floor. Loc: L4/R4. | $399 |
| 3310-0125 | Recessed tubes for (4) pike poles. Tubes to be for (2) 8' and (2) 10' poles. | $519 |
| 3310-0126 | Storage compartment on top of body. Box to be dia plt approx 90L x 10H x 16W with lift-up door on outboard side of box. Locate over L4/L5/L6 and R4/R5/R6. | $1,772 |
| 3310-0127 | Crosslay quad w/dry lay. Includes (3) 5.5" wide single stack crosslays to hold up to 200' of 2.0" DJ or 150'-200' 2.5" DJ (each) and (1) 6" wide dry lay for up to 150-200' of 3.0" DJ. Includes storage pan to rear of crosslays if applicable. | $4,636 |
| 3310-0128 | Pike pole/Ladder storage. Available on HP75/78 SideStacker with tall R1 & HM100/110 SideStacker only. The access door to match the rear body finish. | $648 |
| 3310-0129 | Crosslay triple to hold 400' of 1.75'' DJ (each) in two forward lays and up to 300' of 2.5'' DJ in rear lay. Includes storage pan to rear of crosslays (if applicable). | $3,670 |
| 3310-0130 | Crosslay quad with (2) 4.25" wide single stack to hold up to 200' of 2.0" DJ (each) and (2) 5.5" wide to hold up to 150'-200' 2.5" DJ (each). Includes storage pan to rear of crosslays | $4,636 |
| 3310-0131 | Upper storage box w/hinged cover (PR). Boxes to be dia plt approx 20" wide x 72" long x 11" deep. Lid to be hinged on outboard side with a gas spring hold-open and chrome grab handle offset to the rear. Left side compt to have a full length divider centered side to side. Locate on top of the body between the upper transverse compartments and the turntable. | $3,246 |
| 3310-0132 | Hose storage box w/hinged cover. Box to be dia plt approx 18" wide x 64" long x 8" deep. Lid to be hinged on outboard side with a gas spring hold-open and chrome grab handle. Floor to have extruded alum slats. Locate on top of body left side offset forward. | $1,143 |
| 3310-0133 | Storage boxes above officer side recessed side mount ladder offset rearward. Provide (3) diamond plate storage boxes with drop down doors and D-ring latches. Two rearward boxes to be approx 80" wide each with remaining space for third box. | $2,589 |

| Item No. | Description | |
|---|---|---|
| 3310-0134 | Rear ladder tunnel doors. Vertically hinged diamond plate. Doors to hinge on outboard sides and latch in the middle. D-ring to be on right hand "prmary" door. | $701 |
| 3310-0135 | Recessed tubes for (6) 16' pike poles. Tubes to have locking slots to hold poles in compt IPO doors. | $909 |
| 3310-0136 | Compartments officer side tandem axle HM100/110 SideStacker with 300 gallon tank. Includes rescue style extended height compartments ahead of wheel well compartment over forward tandem and extended hosebed. | $32,239 |
| 3310-0137 | Compartments driver side tandem axle HM100/110 SideStacker with 300 gallon tank. Includes rescue style extended height compartments. | $42,705 |
| 3310-0138 | Crosslay double (2) 4.25" wide single stack to hold up to 200' of 2.0" DJ (each). Includes storage pan to rear of crosslays | $2,705 |
| 3310-0139 | Pikepole/Ladder storage. Holds (4) pike poles and (1) 10' attic with shoes. Available on rear mount platform only. The access doors to match the rear body finish. | $1,156 |
| 3310-0140 | Crosslay double (1) 7.5" wide double stack to hold up to 400' of 2.0" DJ and (1) 10.5" wide to hold 300'-400' of 2.5" DJ. Includes storage pan to rear of crosslays. | $3,171 |
| 3310-0141 | Body wheelwell compartments (4). Driver side forward driver side rearward and officer side rearward approx 24" W x 6" H x 26" D. Officer side forward approx 48" W x 6" H x 26" D. All with drop down doors. Door material to match wheelwell finish. N/A with 8 SCBA tubes (6 max). | $2,292 |
| 3310-0142 | Compartments officer side CR100/95 platform SideStacker with 500g tank. Includes rescue style extended height compartments ahead of wheel well with extended hosebed and optional R3 compartment above forward tandem. | $31,282 |
| 3310-0144 | Rear ladder tunnel doors. Vertically hinged smooth plate aluminum. Doors to hinge on outboard sides and latch in the middle. D-ring to be on right hand "primary" door. | $701 |
| 3310-0145 | Storage boxes above officer side recessed side mount ladder offset rearward. Provide (2) diamond plate storage boxes with drop down doors and D-ring latches. Boxes to be approx 93" wide each. | $2,544 |
| 3310-0147 | Compartments officer side HP100 SideStacker 3" lowered body with 450g tank. Includes rescue style extended height compartments ahead of wheel well with extended hosebed and optional R3 compartment above forward tandem. | $34,327 |
| 3310-0148 | Compartments driver side tandem axle HP SideStacker 3" lowered body with 450g tank. Includes rescue style extended height compartments. | $44,910 |
| 3310-0149 | Fixed diamond plate cover at front of hosebed approx 24'' long. | $577 |
| 3310-0150 | Nozzle/Hose holder with aluminum plate bottom and upright pipe. Location: Hosebed chute tray. | $430 |
| 3310-0151 | Crosslay triple 7.5w x 23d (to 3x3) to hold up to 400' of 2.0" DJ (each). Includes storage pan to rear of crosslays (if applicable). | $4,135 |
| 3310-0152 | Crosslay dry storage. Includes 20"W storage area and storage pan to rear of crosslay. | $3,670 |
| 3310-0153 | Hose storage box w/hinged cover. Box to be dia plt approx 18" wide x 64" long x 8" deep. Lid to be hinged on outboard side with a gas spring hold-open and chrome grab handle. Floor to have extruded alum slats. Locate on top of body right side offset forward. | $1,143 |
| 3310-0154 | Recessed tubes for (8) pike poles. Tubes to be sized for (2) 6' (2) 8' (2) 10' and (2) 12' poles. | $863 |
| 3310-0155 | Body wheelwell compartments (2) above forward tandem approx 24" W x 6" H x 26" D with drop down doors. Door material to match wheelwell finish. | $793 |
| 3310-0158 | Recessed tubes for (6) 12' pike poles. Tubes to have locking slots to hold poles in compt. | $797 |
| 3310-0159 | Side intake panels Zolatone black. HP95MM no tank/pump only. | $325 |
| 3310-0160 | Crosslay triple w/dry lay. All to be 31" deep (to 3x3) with approx 28" high dividers. Includes (2) 4.25" wide single stack crosslays to hold 200' of 1.75" DJ (each) (1) 5.5" wide single stack crosslays to hold 200' of 2.5" DJ and (1) 5.5" wide dry lay for 200' of 2.5" DJ. Includes storage pan to rear of crosslays if applicable. | $5,100 |
| 3310-0163 | Rear ladder tunnel door. Smooth plate lift up door to open 20 degrees past horizontal. Door will be painted. | $925 |
| 3310-0164 | Compartments driver side tandem axle HM100/110 SideStacker with 500 gallon tank. Includes rescue style extended height compartments (L1-L3). | $43,256 |
| 3310-0165 | Compartments officer side tandem axle HM100/110 SideStacker with 500 gallon tank. Includes rescue style extended height compartments ahead of wheel well compartment over forward tandem (extended height) and extended hosebed. | $32,791 |
| 3310-0166 | Crosslay quad with (3) 4.25" wide single stack to hold up to 200' of 2.0" DJ (each) and (1) 5.5" wide to hold up to 150'-200' 2.5" DJ. Includes storage pan to rear of crosslays. | $4,636 |
| 3310-0167 | Fixed diamond plate cover at front of hosebed approx 12'' long. | $577 |

| Item No. | Description | |
|---|---|---|
| 3310-0168 | Crosslay triple 28" deep (to 3x3). Includes (2) 4.25" wide single stack to hold up to 250' of 1.75" DJ(each) and (1) 8.75" wide dbl stack to hold 500' of 1.75" DJ. Includes storage pan to rear of crosslays. | $4,934 |
| 3310-0169 | Pikepole/Ladder storage. Holds (2)6' APH6 (2)8' APH8 (2)12' APH12 Fire Hooks Unlimited Inc. pike poles and (1) FL-10 attic ladder. Available on HP75 SideStacker only. The access door to match the rear body finish. | $648 |
| 3310-0170 | Crosslay Quad (3) 4.25" wide single stack to hold up to 200' of 2.0" DJ each and (1) 10.5 wide double stack to hold up to 300' of 2.5" DJ. Includes storage pan to rear of crosslays. | $4,892 |
| 3310-0171 | Crosslay quad with (2) 4.25" wide single stack to hold up to 200' of 2.0" DJ (each) (1) 5.5" wide to hold up to 150'-200' 2.5" DJ and (1) 10.25" wide dry lay for up to 300' of 2.5" DJ.. Includes storage pan to rear of crosslays if applicable. | $4,636 |
| 3310-0172 | Diamond plate trim plate at top of SideStacker hosebed to simiulate compartment top. | $268 |
| 3310-0173 | Fuel fill door at rear of body. Finish to match rear of body. | $285 |
| 3310-0174 | Provide gas shock for rear ladder tunnel doors at rear of body. To keep doors open when ladders are being deployed. | $176 |
| 3310-0175 | Body wheelwell compartments (4) approx 26" W x 5" H x maximum depth permissible without interference with hydraulic line(s) reservoir(s) etc. A gasketed drop down door shall be installed on each compartment. Door material to match wheelwell finish. | $1,803 |
| 3310-0176 | Transverse compartment floor to be extended out to approx 12" from inside of door opening in L1/R1. | $560 |
| 3310-0177 | Pikepole/tool storage. Holds (3) pike poles and (3) Akron Brass Rubbish Hooks. Available on rear mount platform only. The access doors to match the rear body finish. | $1,156 |
| 3310-0178 | Crosslay triple (2) 4.25" wide single stack to hold up to 200' of 2.0" DJ (each) and (1) 11" wide dbl stack to hold 300' of 3" DJ. Includes storage pan to rear of crosslays | $3,670 |
| 3310-0179 | Cover plate over hydraulic generator lines located towards rear of compartment below generator. | $253 |
| 3310-0180 | Crosslay with cord reel compartment RLP. Includes 2.5" x-lay extra capacity for 650' - 2.5" DJ approx. 17"w x 23"d (to 3x3) x-lay rollers on each end and cord reel comparments located each side ahead of x-lay w/lift-up diamond plate door. | $3,079 |
| 3310-0181 | Crosslay triple (2) 7.50" wide double stack to hold up to 400' of 1.75" DJ (each) and (1) 5.5" wide single stack to hold up to 150'-200' 2.5" DJ. Includes storage pan to rear of crosslays | $4,135 |
| 3310-0182 | Crosslay triple w/dry lay. Includes (2) 10w x 18d (to 3x3) double stack to hold up to 400' of 1.5" DJ or 250-300' of 2.5" DJ each and (1)16"w x 18d (to 3x3) wide dry lay. Does NOT include space for a dunnage pan to rear of crosslays. | $2,608 |
| 3310-0183 | Recessed tubes for (6) pike poles (2)6' (2)8' (1)12' & (1)14'. Note 14' pike pole located officer side storage at bottom position. Not available on HP75 SideStacker. | $869 |
| 3310-0184 | Bolt-in 3/16" diamond plate wall. Locate in upper storage area beneath aerial from side to side just ahead of point where body sides angle down. Note may require notching to wall for aerial lift cylinder clearance (if applicable). | $227 |
| 3310-0185 | Compartments officer side CR100/CR137/95 platform SideStacker with 450g tank. Includes rescue style compartments ahead of wheel wells with standard hosebed. 58" high body for low OAH. Requires troughed cab. | $28,694 |
| 3310-0186 | Compartments driver side CR100/CR137/95 platform SideStacker with 450g tank. Includes rescue style compartments. 58" high body for low OAH. Requires troughed cab. | $41,419 |
| 3310-0187 | Compartments officer side CR100/95 platform with 300g tank. Includes rescue style extended height compartments. | $43,173 |
| 3310-0188 | Rear SideStacker body access doors (4) to have single pan doors with slam style compartment latches. | $628 |
| 3310-0189 | Storage box w/hinged cover. Box to be dia plt approx 13" wide x 96" long x 10" deep. Lid to be hinged on outboard side with slat flooring gas spring hold-opens and chrome grab handle. Locate on top of right side extended high compartments offset rearward. | $981 |
| 3310-0190 | Auxiliary jack pad 24X24 (PR) with side mounted handle and 2x2 aluminum angles welded to form u-shaped channel for jack foot. Includes mounting brackets. Note: Truck is not to be driven with pads on jack feet. | $1,288 |
| 3310-0191 | Observation door with light to view hydraulic generator's reservoir sight level gauge. Locate door above forward driver side outrigger. RLP only. | $221 |
| 3310-0192 | Hose storage box w/hinged covers hinged on outboard side. Box to be dia plt approx 9" wide x 132" long x 14" deep. Cover to be two piece split in the middle with tab permanently attached to underside surface of one of the covers to support the other cover. Includes gas spring hold-opens chrome grab handles and (2) butterfly latches for each cover. Floor to have extruded alum slats. Locate on top of body right side offset as far forward as possible. | $1,625 |

| Item No. | Description | |
|---|---|---|
| 3310-0193 | Crosslay with backboard compartment RLP. Includes (2) 1.5" single stacked x-lays for 200' - 1.75" DJ each (1) 2.5" single stacked x-lay for 200' - 2.5" DJ (all 5.5" wide less plumbing) stainless steel trim around crosslay openings on each end and 8" wide backboard compartment located ahead of x-lays w/smooth plate painted door on each end (Note fixed panel ahead of backboard storage on each side also to be smooth plate painted). | $3,220 |
| 3310-0194 | Stainless steel trim shall be installed vertically at the hosebed chute at rear of body to help protect the body paint. | $184 |
| 3310-0195 | Compartments officer side tandem axle HP SideStacker. Includes rescue style extended height compartments ahead of wheel well with extended hosebed and optional R3 compartment above forward tandem. | $34,952 |
| 3310-0196 | Notch compartment L2 in deep area above jack leg to allow for routing of hydraulic generator hoses. | $327 |
| 3310-0204 | Notch compartment R3 in deep area below compartment depth change offset to forward wall to allow for routing of hydraulic generator hoses. | $327 |
| 3310-0205 | Additional "Safe Operating Grade Indicator" gauge shall be provided gauge is in addition to gauge at rear of body. To be located side facing at rear of body midway up on body panel above corner tailboard. Aerial body only. | $118 |
| 3310-0206 | Crosslay double. Both lays 10.875"W x 23"D (to 3x3) to hold up to 300-350' of 2.5" (each) or 300' of 3" DJ (each). Includes storage pan to rear of crosslays if applicable. | $3,171 |
| 3310-0207 | Crosslay triple extra deep. All to be 31" deep (to 3x3) with approx 28" high dividers. Includes (2) 4.25" wide single stack crosslays to hold 200' of 1.75" DJ (each) (1) 5.5" wide single stack crosslays to hold 200' of 2.5" DJ. Includes storage pan to rear of crosslays if applicable. | $4,126 |
| 3310-0208 | Jack leg opening covers smooth plate painted job color (2) sets. Includes outrigger covers and fixed filler panels. | $1,124 |
| 3310-0209 | Forward jack pad access doors painted outside surface job color and inside surface zolatone gray IPO diamond plate. 95 Mid-mount only. | $438 |
| 3310-0210 | Storage at rear of body in rear tow eye compartment for Junkin MIL-8131-W stokes basket and (2) two pike pole tubes for (1)10' and (1)12' poles. 95' Mid-Mount only. | $492 |
| 3310-0211 | Diamond plate storage box with hinged lid to outside for (2) K12 power cut saws. Box to be approx 48L x 18W x 18H includes butterfly latch gas shock hold-upen and chrome grab handle. Locate on top of body right side offset forward. | $941 |
| 3310-0212 | Crosslay triple extra deep. All to be 31" deep (to 3x3) with approx 28" high dividers (notched). Includes (2) 4.25" wide single stack crosslays to hold 250' of 1.75" DJ (each) (1) 5.5" wide single stack crosslays to hold 200-250' of 2.5" DJ. Includes storage pan to rear of crosslays if applicable. | $4,126 |
| 3310-0213 | Pike pole/Ladder storage. Available on HP75/78 SideStacker with tall R1 & HM100/110 SideStacker only. The pike pole tubes to accomodate APH pike poles. The access door to match the rear body finish. | $648 |
| 3310-0214 | Jack leg opening covers polished stainless steel (2) sets. Includes outrigger covers and fixed filler panels. | $1,841 |
| 3310-0215 | Transverse compartment floor to be extended out to door opening in L1. | $423 |
| 3310-0216 | Compartments officer side tandem axle HP eMAX SideStacker. Includes rescue style extended height compartments ahead of wheel well with extended hosebed. | $32,639 |
| 3310-0217 | Storage box w/hinged cover. Box to be dia plt approx 15" wide x 96" long x 15" deep. Lid with 1.5" lip to be hinged on outboard side with (2) thumb latches (3) EON LED lights mounted to lid to illuminate interior when open gas spring hold-opens and chrome grab handle. Locate on top of body right side above R1/R2. | $1,455 |
| 3310-0218 | Storage box w/hinged cover. Box to be dia plt approx 15" wide x 96" long x 15" deep. Lid with 1.5" lip to be hinged on outboard side with (2) thumb latches (3) EON LED lights mounted to lid to illuminate interior when open gas spring hold-opens and chrome grab handle. Locate on top of body left side above L1/L2. | $1,455 |
| 3310-0219 | Storage box w/hinged cover. Box to be dia plt approx 16" wide x 43" long x 12" deep. Lid to be hinged on outboard side with gas shock hold-opens and chrome grab handle. Locate on top of body over R1 offset forward. | $965 |
| 3310-0220 | Crosslay single (1) 10.5" wide double stack to hold up to 300-400' of 2.5" DJ. Includes storage pan to rear of crosslays. | $1,481 |
| 3310-0221 | Compartments driver side tandem axle HP eMAX SideStacker med cab 240 WB. Includes rescue style extended height compartments. | $43,256 |
| 3310-0222 | Rear turntable access door. Smooth plate lift up door to open 20 degrees past horizontal. Door will match rear body finish. | $925 |

| Item No. | Description | |
|---|---|---|
| 3310-0223 | Compartments driver side HP100 industrial platform SideStacker with short cab 1000 gallon tank and 260" WB. Includes rescue style extended height compartments and raised rear perimeter aft of rear jack legs. The door on small compts next to rear outrigger to match wheelwell. Requires aerial envelope controls. | $44,277 |
| 3310-0224 | Compartments officer side HP100 industrial platform SideStacker with 1000 gallon tank and 260" WB. Includes rescue style extended height compartments ahead of wheel well with extended hosebed optional R3 compartment above forward tandem and raised rear perimeter aft of rear jack legs. Requires aerial envelope controls. | $32,808 |
| 3310-0225 | Compartments officer side CR100/95 platform with 300g tank. Includes rescue style extended height compartments. | $43,151 |
| 3310-0226 | Jack leg opening covers smooth plate painted job color (4) sets. Includes painted plate outrigger covers and fixed painted plate filler panels. HM100/110 requires surface mount warning lights. | $1,772 |
| 3310-0227 | Exterior body stepping surfaces (running boards floor of left rear staircase staircase turntable access steps and rear area at top of access steps) to be 3/16" smooth plate with gator grip painted black durabak IPOS diamond plate. | $1,379 |
| 3310-0228 | Recessed compartment at right rear of body up high for storage of long handle tools (approx size: 6"W x 13"H x 88"D). Locate to outside of officer side pike pole compartment includes hinged door with push button latch. The access door to match the rear body finish. | $708 |
| 3310-0229 | Compartments driver side HP100 Platform SideStacker 260" W/B with medium cab and 300g tank. Includes rescue style extended height compartments. The door on small compts next to rear outrigger to match wheelwell. | $42,070 |
| 3310-0231 | Compartments officer side HP100 SideStacker 3" lowered body with 450g tank. Includes rescue style extended height compartments ahead of wheel well with extended hosebed. | $33,245 |
| 3310-0234 | Compartments officer side HP100 industrial platform SideStacker with 750 gallon tank 252" WB and 58-62K rear. Includes rescue style extended height compartments ahead of wheel well with extended hosebed and raised rear perimeter. Requires aerial envelope controls. | $31,142 |
| 3310-0235 | Compartments driver side HP100 industrial platform SideStacker with short cab 750 gallon tank 252" WB and 58-62K rear. Includes rescue style extended height compartments and raised rear perimeter. The door on small compts next to rear outrigger to match wheelwell. Requires aerial envelope controls. | $43,151 |
| 3310-0236 | Recessed tubes for (4) pike poles. Tubes to be for (2) 6' and (2) 12' poles. | $519 |
| 3310-0237 | Body wheelwell compartments (2) one each side above rearward tandem wheel approx 24" W x 6" H x 26" D with drop down doors. Door material to match wheelwell finish. | $793 |
| 3310-0238 | Wall at rearward most point between cord reel enclosure storage boxes to enclose open storage area beneath aerial. Shall be bolt-in 3/16 Dia Plt. with diamonds facing rear. May require notching for lift cylinder clearance if applicable. | $380 |
| 3310-0239 | Compartments officer side HP100 Platform SideStacker with 300 gallon tank 252" WB and 58-62K rear. Includes rescue style extended height compartments ahead of wheel well compartment over forward tandem and extended hosebed. Requires aerial envelope controls. | $32,337 |
| 3310-0240 | Compartments driver side HP100 Platform SideStacker for long cab with 300 gallon tank 252" WB and 58-62K rear. Includes rescue style extended height compartments ahead of wheel well. The door on small compt next to rear outrigger to match wheelwell. Requires aerial envelope controls. | $43,125 |
| 3310-0241 | Compartments officer side HP100 Platform SideStacker with 300g tank. Includes rescue style extended height compartments ahead of wheel well and rescue style compartments IPO hosebed. The door on small compts next to rear outrigger to match wheelwell. | $32,903 |
| 3310-0242 | Compartments driver side HP100 Platform SideStacker with 300g tank (lowered 2"). Includes rescue style extended height compartments. The door on small compts next to rear outrigger to match wheelwell. | $44,277 |
| 3310-0243 | Compartments officer side HP100 Platform SideStacker with 300g tank (lowered 2"). Includes rescue style extended height compartments ahead of wheel well and rescue style compartments IPO hosebed. The door on small compts next to rear outrigger to match wheelwell. | $44,277 |
| 3310-0244 | Contoured beavertail compartments. Full height door for compartment openning. Includes special mount painted job color for upper rear warning light and rear facing scene (if applicable). | $3,763 |
| 3310-0246 | Auxiliary jack pad 24X24 (4) with side mounted handle. Includes (2) double mounting brackets welded in place. | $2,350 |

| Item No. | Description | |
|---|---|---|
| 3310-0247 | Compartments driver side HP100 industrial platform SideStacker for short cab 1000 gallon tank 252" WB and 58-62K rear. Includes rescue style extended height compartments. The door on small compt next to rear outrigger to match wheelwell. Requires aerial envelope controls. | $44,277 |
| 3310-0248 | Compartments officer side HP100 industrial platform SideStacker with 1000 gallon tank 252" WB and 58-62K rear. Includes rescue style extended height compartments ahead of wheel well with extended hosebed optional R3 compartment above forward tandem. Requires aerial envelope controls. | $32,808 |
| 3310-0249 | Storage box for handheld jack control. Approx size: 14"wide x 8" high x 14"deep. Includes hinged diamond plate door with push button latch. Locate in driver side rear staircase down low recessed in back wall. | $345 |
| 3310-0250 | Diamond plate trm between turntable disc and top of body. Required on Metro 100 with waterway. | $476 |
| 3310-0251 | Recessed storage for (4) pike poles IPO recessed tubes at rear of body. Includes boxes at driver's side for (2) D-handled 6' poles and officer's side for (2) D-handled 8' poles. The access doors to match the rear body finish. For use with rear mount aerials. | $1,156 |
| 3310-0253 | Recessed tubes for (4) pike poles. Tubes to be for (2) APH-6' (1) APH-8' and (1) APH-12' Fire Hooks Unlimited poles. | $519 |
| 3310-0254 | Diamond plate storage box with hinged lid to outside for chain saws. Box to be approx 35L x 16W x 18H includes butterfly latch gas shock hold-upen and chrome grab handle. Locate on top of body right side offset forward. | $900 |
| 3310-0255 | Crosslay triple extra deep. All to be 27" deep (to 3x3). Includes (2) 4.25" wide single stack crosslays to hold 225' of 1.75" DJ (each) (1) 5.5" wide single stack crosslays to hold 200' of 2.5" DJ. Includes storage pan to rear of crosslays if applicable. | $4,126 |
| 3310-0256 | Compartments driver side tandem axle HP eMAX SideStacker med cab 240 WB. Includes rescue style compartments. | $40,681 |
| 3310-0257 | Compartments officer side tandem axle HP eMAX SideStacker med cab 240 WB. Includes low side compartments with full length hosebed. Decreases height of compartments R1 and R2. | $24,778 |
| 3310-0259 | Recessed tubes for (10) pike poles. Tubes to be sized for (4) 8' (2) 10' and (4) 12' poles. Locate (5) each side of rear ladder tunnel. | $1,078 |
| 3310-0260 | Aluminum plate provided at bottom behind fuel fill door at rear of body to protect wiring from spills when refueling. | $134 |
| 3310-0262 | Upper dunnage area extension 34 x 73 diamond plate. | $662 |
| 3310-0263 | Crosslay triple to hold 200' of 1.75" DJ (each) in two forward lays and 200' of 2.5" DJ in rear lay. Includes storage pan to rear of crosslays. | $3,670 |
| 3310-0264 | Compartments driver side HP100 Platform SideStacker for long cab with 300 gallon tank 252" WB and 58-62K rear. Includes rescue style extended height compartments ahead of wheel well and raised rear perimeter. The door on small compt next to rear outrigger to match wheelwell. Requires aerial envelope controls. | $43,125 |
| 3310-0265 | Compartments officer side HP100 Platform SideStacker with 300 gallon tank 252" WB and 58-62K rear. Includes rescue style extended height compartments ahead of wheel well compartment over forward tandem and extended hosebed and raised rear perimeter. | $32,337 |
| 3310-0266 | Rear ladder tunnel door. Smooth plate lift up door to open 20 degrees past horizontal. Door will be painted to match the "two tone" sale code color. | $925 |
| 3310-0267 | Compartments officer side HP100 Platform SideStacker with 300 gallon tank 252" WB and 58-62K rear. Includes rescue style extended height compartments ahead of wheel well extended hosebed and raised rear perimeter. | $31,116 |
| 3310-0268 | Compartments driver side HP100 Platform SideStacker for medium cab with 300 gallon tank 252" WB and 58-62K rear. Includes rescue style extended height compartments ahead of wheel well and raised rear perimeter. The door on small compt next to rear outrigger to match wheelwell. Requires aerial envelope controls. | $43,125 |
| 3310-0269 | Recessed tubes for (6) pike poles. Not available on HP75 SideStacker. | $648 |
| 3310-0270 | Pike pole/Attic ladder storage at rear of body each side of ladder tunnel. Shall hold (3) pike poles and (1) 8' Duo-Safety attic ladder on driver side and (3) pike poles and (1) 10' Duo-Safety attic ladder on officer side. Available on rear mount platform only. The access doors to match the rear body finish. | $1,805 |
| 3310-0271 | Recessed tubes for (6) pike poles: (2)8' (1)10' (1)12' (1) 14' & (1)16'. Note 14' & 16' pike poles located one each side in lower storage at rear of body. Not available on HP75 SideStacker. | $1,095 |
| 3310-0272 | Compartments officer side tandem axle HM100/110 SideStacker 3" lowered body with 450 gallon tank. Includes rescue style extended height compartments ahead of wheel well and extended hosebed. | $34,954 |

| Item No. | Description | |
|---|---|---|
| 3310-0273 | Compartments driver side tandem axle HM100/110 SideStacker 3" lowered body with 450g tank. Includes rescue style extended height compartments ahead of wheel well. | $45,419 |
| 3310-0274 | Rear tandem wheel well splash shields provided on driver and officer sides to prevent road salt from getting between ladder tunnel platework and top of torque box. Shields must be removable (bolt-on) for periodic cleaning. Aerial application only. | $1,689 |
| 3310-0275 | Crosslay quad with (2) 4.25" wide single stack to hold up to 200' of 2.0" DJ (each) (1) 5.5" wide to hold up to 150'-200' 2.5" DJ and (1) 22" wide dry lay for up to 600' of 3" DJ. Includes storage pan to rear of crosslays if applicable. | $4,636 |
| 3310-0276 | Crosslay double extra deep. All to be 31" deep (to 3x3) with approx 28" high dividers. Includes (2) 5.5" wide single stack crosslays to hold up to 250' of 2.0" DJ (each) or 200' 2.5" DJ (each). Includes storage pan to rear of crosslays if applicable. | $3,592 |
| 3310-0277 | Boxed out rear ladder tunnel doors. Horizontally hinged smooth plate (drop down). Doors to match rear body finish. | $1,346 |
| 3310-0278 | Notch compartment R4 lower ceiling below offset to allow for routing of 5" rear intake pipe to exit out at rear of body beneath officer side ladder tunnel. | $327 |
| 3310-0279 | Crosslay triple 5.5" wide single stack to hold up to 200' of 2.0" DJ (each) or 150'-200' 2.5" DJ (each). Includes smooth plate IPO diamond plate storage pan painted black durabak to rear of crosslays. | $3,823 |
| 3310-0280 | There shall be no visible diamond plate on the body exterior. The following items on the body to be smooth plate painted job color or two tone if applicable: forward facing panels in the pump module's headboard panel to rear of crosslay on the officer side upper side and rear facing panels driver and officer side above compartments and bolt-on splash guards at front of the pump module. The following items on the body to be smooth plate painted black durabak: gator grip running boards upper deck plate work on top of body including compartment tops rear beavertail plate work rear access steps w/gator grip tailboard w/gator grip and exterior inside facing platework/extrusions on the extended beavertail compartments at either side of driver and officer side ladder tunnels. | $1,247 |
| 3310-0281 | Rear ladder tunnel doors. Horizontally hinged drop down smooth plate. Doors to match rear body finish. | $701 |
| 3310-0282 | Combine L4 lower with L5 for mounting long handled tools on back wall. Note this applies to the height of L5 only. | $376 |
| 3310-0283 | Crosslay triple 10.5w x 15d (to 3x3) to hold up to 200' of 2.5" DJ (each). Includes storage pan to rear of crosslays if applicable. | $4,135 |
| 3310-0284 | Crosslay double (1) 5.5" wide single stack to hold up to 200' of 2.0" DJ and (1) 16.5 wide triple stack for dry storage to hold up to 400' of 3.0" DJ. Includes storage pan to rear of crosslays (if applicable). | $2,756 |
| 3310-0285 | Compartments driver side tandem axle HP SideStacker. Includes rescue style compartments ext height on L1-L3. | $43,256 |
| 3310-0286 | Compartments officer side tandem axle HP SideStacker. Includes rescue style compartments ahead of wheel well with extended hosebed and optional R3 compartment above forward tandem. | $32,770 |
| 3310-0287 | Bolt-in floor. Location: turntable access area. HP75/78 only. | $374 |
| 3310-0288 | Compartments officer side HP100 Platform SideStacker 400-500 gallon tank 252" WB and 58-62K rear. Includes rescue style extended height compartments ahead of wheel well and extended hosebed. Requires aerial envelope controls. | $31,116 |
| 3310-0289 | Compartments driver side HP100 Platform SideStacker for long cab with 400-500 gallon tank 252" WB and 58-62K rear. Includes rescue style extended height compartments ahead of wheel well. The door on small compt. next to rear outrigger to match wheelwell. Requires aerial envelope controls. | $43,125 |
| 3310-0290 | Jack leg opening covers brushed finish S/S (2) sets. Includes outrigger covers and fixed filler panels. HP95 MM only. | $285 |
| 3310-0291 | Jack leg opening covers brushed finish S/S (4) sets. Includes outrigger covers and fixed filler panels. | $569 |
| 3310-0292 | Jack leg opening covers brushed finish S/S (2) sets. Includes outrigger covers and fixed filler panels. For HP75/78 and Tiller. | $389 |
| 3310-0293 | Crosslay Triple (2) single stacked and (1) double stacked Midmount. Forward two lays 5.5"W x 18"D to hold up to 200' of 2" DJ each. Rearward lay 10.5"W x 18"D to hold up to 300' of 2.5" DJ. Midmount only. | $3,433 |
| 3310-0294 | Storage box w/hinged cover for miscellaneous items. Box to be dia plt approx 16" wide x 60" long x 10" deep. Lid to be hinged on outboard side with a gas spring hold-open chrome grab handle and butterfly latch. Locate on top of body on compartment top over L4. | $1,143 |

| Item No. | Description | |
|---|---|---|
| 3310-0295 | Additional "Safe Operating Grade Indicator" gauge (PR) shall be provided gauge is in addition to gauge at rear of body. To be located one each side in driver and officer side rear side staircases attached to back wall. Aerial body only. | $236 |
| 3310-0296 | Auxiliary jack pad 24X24 (4) with handle welded to top surface of pad. Includes mounting brackets. | $2,350 |
| 3310-0297 | Recessed tubes for (6) pike poles. Not available on HP75 SideStacker. | $648 |
| 3310-0298 | Auxiliary jack pad 26X26x1.5 poly (4) with textured finish and rope handles. Includes (2) double mounting brackets (welded on). | $3,357 |
| 3310-0299 | Miscellaneous long handle tool storage sleeve. Suspended from ceiling mounted just below roll-up door approximate size: 8"H x 16"W x 89"L. Includes 1.5" lip on each side of opening to prevent tools from interfering with roll-up door. Location: L1/R1 transverse offset rearward. | $1,241 |
| 3310-0300 | Compartments driver side HPS105 ladder SideStacker and 300 gallon tank (182 C/A). Includes rescue style extended height compartments and raised rear body for improved angle of departure. | $42,070 |
| 3310-0301 | Compartments officer side HPS105 ladder SideStacker with 300 gallon tank. Includes rescue style extended height compartments ahead of wheel well with extended hosebed and raised rear body for improved angle of departure. | $30,060 |
| 3310-0302 | Boxed out rear ladder tunnel doors. Horizontally hinged (drop down) on driver side vertically hinged on officer side (hinged outboard). Doors to match rear body finish. | $1,346 |
| 3310-0303 | Auxiliary jack pad 24X24 (4) with 20 degree formed handle. Includes (4) mounting brackets. | $2,350 |
| 3310-0304 | Jack leg opening covers smooth plate painted Durabak black (4) sets. Includes painted plate outrigger covers and fixed painted plate filler panels. HM100/110 requires surface mount warning lights. Only available with jack leg tie off eye on outriggers. | $1,772 |
| 3310-0305 | Storage box w/hinged cover. Box to be smooth plt painted black Durabak approx 15" wide x 96" long x 15" tall. Lid with 1.5" lip to be hinged on outboard side with (3) EON LED lights mounted to lid to illuminate interior when open gas spring hold-opens and chrome grab handle painted Durabak black. Note: Aerial applications may require raising aerial to open storage lid if option for ladder storage bracket mounted to side of base is present in order. Locate on top of body above L2-L4. | $1,548 |
| 3310-0306 | Storage box w/hinged cover. Box to be smooth plt painted black Durabak approx 15" wide x 96" long x 15" tall. Lid with 1.5" lip to be hinged on outboard side with (3) EON LED lights mounted to lid to illuminate interior when open gas spring hold-opens and chrome grab handle painted Durabak black. Note: Aerial applications may require raising aerial to open storage lid if option for ladder storage bracket mounted to side of base is present in order. Locate on top of body above R2-R4. | $1,548 |
| 3310-0307 | Aluminum smooth plate IPO diamond plate painted job color for the following: forward facing panels in the pump module's headboard upper side facing and rear facing panels driver and officer side above compartments panel just to rear of tandem axle and bolt-on splash guards at front of the body. Diamond plate painted Durabak black for the following: upper deck plate work on top of body including compartment tops and contoured beavertail exterior inside facing plate work. Body plate work to be smooth plate IPO diamond plate painted Durabak black for the following: rear access steps w/gator grip and tailboard w/gator grip. | $2,379 |
| 3310-0308 | Storage area beneath aerial at top of body to have roof top style compartment lids for weather proof storage gas shocks chrome grab handles painted Durabak black and (3) EON LED lights mounted to each lid to illuminate interior when open. All exterior plate work to be diamond plate painted Durabak black. All enclosed interior plate work to be smooth plate with sanded finish (unpainted). Includes an open transverse storage forward for generator and (2) lift up lids with one degree pitch hinged to outside to enclose rearward storage. Note inside enclosed storage area to be open without partitions. | $10,393 |
| 3310-0309 | Auxiliary jack pad 26X26 (4) with 20 degree formed handle. Includes (4) mounting brackets. | $2,416 |
| 3310-0310 | Auxiliary jack pad 26X26 (4) with 20 degree formed handle. Includes (2) double mounting brackets. | $2,013 |
| 3310-0311 | Auxiliary jack pads 24X24 (4) with 20 degree formed handle. Includes mounting brackets to store (2) each side of the body next to front drop down jacks. | $1,934 |
| 3310-0312 | Auxiliary jack pad 28X28 (4) with 20 degree formed handle. Includes (2) double mounting brackets. | $2,072 |
| 3310-0313 | Auxiliary jack pad 30X30 (4) with 20 degree formed handle. Includes (4) mounting brackets. | $2,545 |
| 3310-0314 | Auxiliary jack pad 24X24 (2) with 20 degree formed handle. Includes mounting brackets. | $1,176 |
| 3310-0315 | Auxiliary jack pad 26X26 (4) with 20 degree formed handles. Includes (2) double mounting brackets. Note both pads to store in same slot to reduce profile below body. | $2,350 |

| Item No. | Description | |
|---|---|---|
| 3310-0317 | Hose storage box w/hinged covers hinged on outboard side. Box to be dia plt approx 11" wide x 115" long x 16" deep with forward facing surface of box left open for preconnected hose. Cover to be two piece split in the middle with tab permanently attached to underside surface of one of the covers to support the other cover. Includes black nylon strap with buckle to secure hose and gas spring hold-opens chrome grab handles and (2) butterfly latches for each cover. Floor to have extruded alum slats. Locate on top of body right side offset as far forward as possible. | $1,625 |
| 3310-0318 | Compartments officer side HP100 Platform SideStacker with 300g tank (lowered 2"). Includes rescue style extended height compartments ahead of wheel well compartment over forward tandem and extended hosebed. | $32,781 |
| 3310-0319 | Hose/Electric ladder pipe storage box w/hinged cover to outside for 100' of 3" DJ and Akron Electric Ladder Pipe monitor model#1494 with 5177 nozzle. Box to be dia plt approx 12" wide x 88" long x 16" deep with divider offset 50" from forward wall to separate hose storage side from electric ladder pipe storage side. Includes gas spring hold-opens chrome grab handle and (2) butterfly latches. Hose storage side (38" long) floor to have extruded alum slats. Locate on top of body right side offset forward. | $1,892 |
| 3310-0320 | Body exterior aluminum plate work to be smooth plate IPO diamond plate and painted job color as follows: upper side facing and rear facing panels driver and officer side above compartments and fuel fill hinged door and fixed panel below door each side to rear of tandem axle. | $551 |
| 3310-0321 | Access panels on upper back wall of L4/R3 for access to inside of ladder tunnel for periodic cleaning. Requires corresponding access panels on ladder tunnel plate work. Aerial bodies with center ladder tunnel only. | $327 |
| 3310-0322 | Compartments officer side HP100 Platform SideStacker with 300g tank. Includes rescue style extended height compartments and rescue style compartments IPO hosebed (Note officer side compartments to match driver side). The door on small compt next to rear outrigger to match wheelwell. | $42,861 |
| 3310-0323 | Compartments driver side HP100 Platform SideStacker with 300g tank. Includes rescue style extended height compartments and separate rear side compartment ahead of 18"W rear side staircase. The door on small compt next to rear outrigger to match wheelwell. | $42,861 |
| 3310-0324 | Crosslay double w/dry lay 26" deep. Includes (1) 4.25" wide single stack to hold up to 200' of 2.0" DJ (1) 5.5" wide single stack to hold up to 200' of 2.5" DJ and (1) 11" wide dry lay to hold up to 300' of 3" DJ. Includes storage pan to rear of crosslays (if applicable). | $3,670 |
| 3310-0325 | Storage box w/hinged cover for miscellaneous items. Box to be dia plt approx 16" wide x 60" long x 10" deep. Lid to be bi-fold style and hinged on outboard side with a gas spring hold-open chrome grab handle and butterfly latch. Floor to have extruded aluminum slats. Locate on top of body on compartment top over L4. | $1,341 |
| 3310-0326 | Compartments driver side CR100/CR137/95 platform SideStacker with 300g tank. Includes rescue style extended height compartments (L1-L3) and rear corner style staircase w/corner access steps to allow 45 degree angle access to turntable. | $43,593 |
| 3310-0327 | Recessed tubes for (8) Fire Hooks Unlimited pike poles. Tubes to be sized for (2) 6' (2) 8' (2) 10' and (2) 12' poles. The access doors to match the rear body finish. Not available on HP75/78 SideStacker. | $863 |
| 3310-0328 | Compartments officer side CR100/CR137/95 platform SideStacker with 300g tank. Includes rescue style extended height compartments (R1-R3) and rear corner style staircase w/corner access steps to allow 45 degree angle access to turntable IPO hosebed. | $45,129 |
| 3310-0329 | Double crosslays for use with removable poly trays and dry lay storage offset to rear without tray. Forward tray to be accessible from driver side only and second tray to be accessible from officer side only each tray to hold 180' of 2" DJ preconnected hose. Rearward for dry lay storage to hold 200' of 3" DJ accessible from officer side only. Includes storage pan to rear (if applicable). | $3,176 |
| 3310-0330 | Fuel fill hinged door and fixed panel below door each side to rear of tandem axle to be brushed S/S IPOS. Grain to run horizontal. | $59 |
| 3310-0331 | Compartments driver side HPS105 ladder SideStacker with 500g tank (182 C/A). Includes rescue style extended height compartments and raised rear body for improved angle of departure. | $42,070 |
| 3310-0332 | Compartments officer side HPS105 ladder SideStacker with 500 gallon tank. Includes rescue style extended height compartments ahead of wheel well with extended hosebed and raised rear body for improved angle of departure. | $30,060 |
| 3310-0334 | Stainless steel trim (PR) along sides and top edge of each fuel fill opening on driver and officer side of body. | $350 |

| Item No. | Description | |
|---|---|---|
| 3310-0335 | Fabricated aluminum smooth plate enclosure for pump panel to mount to. Located in L1 transverse compartment against rearward wall that extends from inside of L1 door opening to center of transverse compartment to allow plumbing to enter up through floor between frame rails. Includes an access panel with thumb latches on forward wall for plumbing access. Note enclosure to match compartment interior finish. | $1,284 |
| 3310-0336 | Crosslay double w/dry lay. Includes (2) 7.5" wide double stacked crosslays to hold up to 200' of 1.75" DJ preconnected hose in each lay and (1) 11.5"w double stack dry lay for 200' of 3" DJ (15" deep to 3x3). Forward lay to be accessible from driver side only with second lay and third dry lay accessible from officer side only. Remaining space to rear of crosslays for long handle tool storage with vertically hinged diamond plate door and thumb latch on driver side only. For use with hose connection above crosslay floor only. | $4,061 |
| 3310-0337 | Crosslay single w/dry storage. Includes (1) 5.5" wide single stack to hold up to 200' of 2.0" DJ or 150'-200' 2.5" DJ and (1) 14.25" wide for dry storage. Includes storage pan to rear of crosslays. | $3,790 |
| 3310-0338 | Crosslay quad (4) 4.75" wide single stack to hold up to 200' of 2.0" DJ (each) or 150-200' of 2.5" DJ (each). Includes storage pan to rear of crosslays. | $4,636 |
| 3310-0339 | Crosslay single w/dry lay. Includes (1) 5.5" wide single stack crosslays to hold up to 200' of 2.0" DJ or 150'-200' 2.5" DJ and (1) 11" wide dry lay for up to 300' of 3.0" DJ. Includes storage pan to rear of crosslays. | $3,670 |
| 3310-0341 | Compartments officer side CR100/95 platform/CR137 SideStacker with 500g tank. Includes rescue style compartments ahead of wheel well optional R3/R4 above tandem with extended hosebed with single lay extending behind R4. Rear of body raised 4" for improved angle of departure. | $32,702 |
| 3310-0342 | Compartments driver side CR100/95 platform/CR137 SideStacker 250" w/b with 500g tank. Includes rescue style extended height compartments on L1-L3. Rear of body raised 4" for improved angle of departure. | $43,225 |
| 3310-0343 | Compartments driver side HP100 Platform SideStacker for medium cab 400-500 gallon tank 252" WB and 58-62K rear. Includes rescue style extended height compartments ahead of wheel well and raised rear perimeter. The door on small compt next to rear outrigger to match wheelwell. Requires aerial envelope controls. | $43,125 |
| 3310-0344 | Compartments driver side HP100 Platform SideStacker for long cab 400-500 gallon tank 252" WB and 58-62K rear. Includes rescue style extended height compartments ahead of wheel well and raised rear perimeter. The door on small compt next to rear outrigger to match wheelwell. Requires aerial envelope controls. | $43,125 |
| 3310-0345 | Compartments officer side HP100 Platform SideStacker 400-500 gallon tank 252" WB and 58-62K rear. Includes rescue style extended height compartments ahead of wheel well extended hosebed and raised rear perimeter. Requires aerial envelope controls. | $31,116 |
| 3310-0346 | Compartments officer side HP100 Platform SideStacker 400-500 gallon tank 252" WB and 58-62K rear. Includes rescue style extended height compartments ahead of wheel well optional R3 compartment above forward tandem extended hosebed and raised rear perimeter. Requires aerial envelope controls. | $31,642 |
| 3310-0347 | Body exterior aluminum plate work to be smooth plate IPO diamond plate and painted job color as follows: upper side facing and rear facing panels driver and officer side above compartments. | $346 |
| 3310-0348 | Auxiliary jack pad 24X24 (4) with 20 degree formed handle. Includes (1) double mounting bracket for driver side and (2) single mounting brackets for officer side. Applies to L2 lower aerial hydraulic reservoir location. | $2,148 |
| 3310-0349 | Body wheelwell compartments (2) one each side above forward tandem wheel approx 24" W x 4" H x maximum depth permissible without interference with hydraulic line(s) reservoir(s) etc. A gasketed drop down door shall be installed on each compartment. Door material to match wheelwell finish. | $793 |
| 3310-0350 | Storage shall be provided for two (2) customer supplied Junkin JSA-200 stokes baskets and four (4) 6' pike poles in L2/R2 transverse compartment. Includes the transverse floor extended out to door opening on each side one horizontal fixed shelf offset approximately 8.5" above transverse floor and four 6' aluminum tubes. Four 6' pike pole tubes located one at each lower corner of the two storage bins that will store the stokes baskets pike pole tubes to be bolted in. Note pike poles to exit out L2 to be mounted ahead of stokes and pike poles to exit out R2 to mount to rearward of stokes baskets. | $609 |

| Item No. | Description | |
|---|---|---|
| 3310-0351 | Two storage boxes (PR) for dealer supplied 6' Dragon Slayer hooks with D-Handles. Approx. box size: 8" wide x 74" long x 3" high. Boxes to be fabricated from .125" diamond plate with drop down hinged door and butterfly latches on each box end. Locate over horizontal ladder storage offset forward bolted to ceiling positioned approximately at 15 degree angle out to rear. | $939 |
| 3310-0352 | Long handle tool storage box w/lift-up hinged cover. Special design box to allow cover to open with storage box extending below bottom rail of aerial base section. Box to be diamond plate approx 26" wide x 74" long x 14" tall. Lid hinged on outboard side with 1.5" lip all sides chrome grab handle (2) thumb latches (3) EON LED lights mounted to lid to illuminate interior when open and gas spring hold-opens. Locate on top of body driver side just to rear of L2 extended high side. | $1,466 |
| 3310-0354 | Auxiliary jack pad 24X24 (4) with 20 degree formed handle. Includes (2) double mounting brackets. | $1,947 |
| 3310-0355 | Body wheelwell compartments for total of (4) shall be as follows: driver side (2) approx 24" W and officer side (2) approx 20" W both sides x 6" H x maximum depth permissible without interference with hydraulic line(s) reservoir(s) etc. A gasketed drop down door shall be installed on each compartment. Door material to match wheelwell finish. | $1,420 |
| 3310-0356 | Upper dunnage area extension 34 x 46 diamond plate. Includes offset for generator cover clearance. | $605 |
| 3310-0357 | Body modification to R3 compartment for mounting diesel generator. Includes support bracing diamond plate cover raised approx 4" with lift-up hinged access door on top gas shock hold open and thumb latches. Diamond plate liftup door with expanded metal cutout for side access IPO double pan door includes gas shock hold open and thumb latches. Fixed diamond plate panel w/expanded metal cutout offset ahead of lift-up door with partition wall to prevent air flow recirculation. | $2,953 |
| 3310-0358 | Hinged smooth plate cover for the aerial hydraulic reservoir for use in top side mounting applications. Includes flush access door with thumb latch to inspect or fill hydraulic reservoir. | $376 |
| 3310-0360 | Ladder tunnel opening to have a S/S chain to retain ladders. | $348 |
| 3310-0361 | Crosslay double (1) 7.5" wide double stack for 200' of 2.0" DJ and (1) 10.5" wide double stack for 200' of 2.5" DJ. Includes storage pan to rear of crosslays. | $3,171 |
| 3310-0362 | Diamond plate liftup door with expanded metal cutout for side access to diesel/APU generator. Includes hinged lift-up diamond plate access panel w/D-ring latch and (2) gas shocks. Officer side of body over forward outrigger. | $414 |
| 3310-0363 | Compartments driver side HP100 Platform SideStacker with pump no tank. Includes rescue style extended height compartments. The door on small compts next to rear outrigger to match wheelwell. | $42,070 |
| 3310-0364 | Compartments officer side HP100 Platform SideStacker with pump no tank. Includes rescue style extended height compartments ahead of wheel well with extended hosebed. | $30,060 |
| 3310-0365 | Compartments officer side HP100 Platform SideStacker with 150g tank. Includes rescue style extended height compartments ahead of wheel well with extended hosebed. | $30,060 |
| 3310-0366 | Compartments driver side HP100 Platform SideStacker with 150g tank. Includes rescue style extended height compartments. The door on small compts next to rear outrigger to match wheelwell. | $42,070 |
| 3310-0367 | Crosslay quad w/dry lay. Includes (2) 5.5" wide single stack crosslays to hold up to 200' of 2.0" DJ (1) 10.5" wide double stack to hold up to 200' of 2.5" DJ and (1) 11" wide dry lay for up to 300' of 3.0" DJ. Does NOT include a storage pan rearward of crosslays. | $3,972 |
| 3310-0368 | Crosslay quad with (2) 4.25" wide single stack to hold up to 200' of 2.0" DJ (each) (1) 10.5" wide to hold 200' 2.5" DJ and (1) 16.5" wide dry lay for up to 450' of 3" DJ. Does NOT include storage pan to rear of crosslays. | $4,636 |
| 3310-0369 | Rear under-body splash shield(s) to mitigate road debris from getting on components up in chassis at rear of body. HP100 Platform only. Locate rearward of jacks. Shield(s) must be removable (bolt-on) for periodic cleaning. | $970 |
| 3310-0370 | Recessed tubes for (6) NY Hook pike poles. Not available on HP75 SideStacker. | $648 |
| 3310-0371 | Pike pole/Attic ladder storage at rear of body each side of ladder tunnel. Shall hold (2) 8' and (2) 10' pike poles w/Fire Hooks Unlimited all purpose heads on driver side and (2) 10' Duo-Safety attic ladders (585-A) on officer side. Available on rear mount platform only. The access doors to match the rear body finish. | $1,805 |
| 3310-0372 | Rear beavertail access staircase's top step on both sides to extend to and align with hose chute floor. | $140 |

| Item No. | Description | |
|---|---|---|
| 3310-0373 | Body wheelwell compartments (4) approx 24" W x 4" H x maximum depth permissible without interference with hydraulic line(s) reservoir(s) etc. A gasketed drop down door shall be installed on each compartment. Door material to match wheelwell finish. | $1,196 |
| 3310-0374 | Crosslay single (1) 10.5" wide double stack to hold up to 200' of 2.5" DJ. Includes storage pan to rear of crosslays (if applicable). | $1,481 |
| 3310-0375 | Compartments officer side CR100/95 platform SideStacker with 500g tank and extended hosebed. Includes rescue style extended height compartments R1-R2 ahead of wheel well extended higher to match enclosed pump panel compartment height followed by optional R3 over forward tandem wheel stepped down to standard extended height with hosebed behind for additional hose storage making R3 shallow compartment. | $35,751 |
| 3310-0376 | Compartments driver side CR100/CR137/95 platform SideStacker 250" WB with 500g tank. Includes rescue style extended height compartments L1-L2 ahead of wheel well extended higher to match enclosed pump panel compartment height followed by L3 stepped down to standard extended high. | $41,293 |
| 3310-0377 | Doors for rear master and jack control controls. Doors for jack controls to be drop down door. Doors to match rear body finish. | $404 |
| 3310-0378 | Diamond plate hose storage box on officer side of open storage area below aerial device behind generator. Includes open top area with (3) seatbelt style hold downs and decking. Size box to fit 150' of 3" hose. (hose not included) | $921 |
| 3310-0379 | Compartments L3 & L4 modified into one continuous compartment on the inside without wall between. Note will maintain original compartment depths. | $324 |
| 3310-0380 | Doors for rear master and jack control controls. Doors for jack controls to hinged on inboard side for clearance when operating controls. Door for master control to be drop down door. Doors will match rear body finish. | $404 |
| 3310-0381 | Pikepole/Ladder storage. Recessed tubes for (5) Fire Hooks Unlimited pike poles w/straight fiberglass poles and (1) 10' attic with shoes. Available on rear mount platform only. The access doors to match the rear body finish. | $760 |
| 3310-0382 | Jack leg opening covers smooth plate painted job color (2) sets. Includes painted plate outrigger covers and fixed painted plate filler panels. HP95 MM only. | $886 |
| 3310-0383 | Auxiliary jack pad 26X26x1.5 poly (4) with textured finish and rope handles. Includes mounting brackets (welded on). | $3,208 |
| 3310-0384 | Storage boxes above officer side recessed side mount ladder offset rearward. Provide (2) diamond plate storage boxes with drop down doors and D-ring latches. Boxes to be approx 72" wide each | $2,477 |
| 3310-0385 | Recessed fuel fills IPOS for dual fuel fill application (1) each side recessed in panel behind body wheel wells. Aerial application only. | $663 |
| 3310-0386 | Attic ladder storage at rear of body above top step each side of ladder tunnel. Shall hold (2)10' Alco-Lite attic ladders w/shoes one each side. Available on rear mount platform only. The access doors to match the rear body finish. | $1,805 |
| 3310-0387 | Storage sleeve ceiling mounted in L1/R1 compartment in transverse area horizontally mounted. Sleeve to hold pike poles and quartz lights. Sleeve to be approximately 24" wide x 12" high x 72" long centered side to side between compartment openings. Sleeve shall have four total openings. Upper opening to be approximately 23.5" wide x 6" high x 72" long. Three lower openings equally spaced approximately 7.75" wide x 6" high x 72" long. Below each equally spaced compartment shall be (1) 6' pike pole tube. (2) tubes to be accessible from officer side (1) from the driver side. See photo on file. | $2,078 |
| 3310-0388 | Compartments officer side HPS105 ladder SideStacker with 300g tank. Includes rescue style extended height compartments ahead of wheel well with extended hosebed optional R3 compartment above forward tandem and raised rear body for improved angle of departure. | $31,282 |
| 3310-0389 | Compartments officer side HPS105 ladder SideStacker with 500g tank. Includes rescue style extended height compartments ahead of wheel well with extended hosebed optional R3 compartment above forward tandem and raised rear body for improved angle of departure. | $31,282 |
| 3310-0390 | Compartments driver side CR100/CR137/95 platform SideStacker with 270g tank. Includes rescue style height compartments. 58" high body for low OAH. Requires troughed cab. | $41,270 |
| 3310-0391 | Compartments officer side CR100/CR137/95 platform SideStacker with 270g tank. Includes rescue style height compartments ahead of wheel well with standard hosebed. 58" high body for low OAH. | $29,800 |
| 3310-0392 | Contoured beavertail compartments. Door opening raised for warning light. Includes special mount painted job color for upper rear warning light and rear facing scene (if applicable). | $3,763 |
| 3310-0393 | Rollup rear ladder compartment door for SideStacker and NPNT aerial with side staircases (N/A on HP100P) painted upper two-tone job color. Includes hinged ladder retention plate. | $2,412 |

| Item No. | Description | |
|---|---|---|
| 3310-0394 | Jack leg opening covers brushed finish S/S (4) sets. Includes outrigger covers and fixed filler panels. Panels made of 12ga material. | $740 |
| 3310-0396 | Recessed tubes for (4) pike poles. Not available on HP75 SideStacker. | $519 |
| 3310-0397 | Compartments officer side HP100 Platform SideStacker with 300g tank (lowered 2"). Includes rescue style extended height compartments ahead of wheel well with extended hosebed. | $32,267 |
| 3310-0398 | Auxiliary jack pad 24X24 (4) with 20 degree formed handle. Includes (4) mounting brackets. Brackets to be mounted so the formed handles are flush with edge of rubrail. | $2,844 |
| 3310-0399 | Hose storage box w/hinged cover to outside. Box to be diamond plate approximately 10.25" wide x 62" long x 12" deep. Includes gas spring hold-opens chrome grab handle and (2) butterfly latches. Floor to have extruded alum slats. Locate on top of body right side offset forward. | $1,143 |
| 3310-0400 | Compartments driver side CR100/95 platform/CR137 SideStacker with 500g tank long cab 250 WB. Includes rescue style extended height compartments. | $42,564 |
| 3310-0401 | Recessed storage box at driver side rear of body for handheld jack control 10W x 13H x 10D. Locate below extended top step. Door material to be the same as rear body surface. | $499 |
| 3310-0403 | Storage pan. Locate in forward area of ladder tunnel in center body section on officer side ahead of ladders for generator storage. Applies to 95 mid-mount only. | $770 |
| 3310-0404 | Compartments officer side tandem axle HP SideStacker. Includes rescue style extended height compartments ahead of wheel well with extended hosebed and optional R3 & R4 compartments above forward and rearward tandem wheels. | $35,912 |
| 3310-0405 | Crosslay quad with (3) 4.75" wide single stack to hold up to 200' of 2.0" DJ (each) and (1) 5.5" wide to hold up to 150'-200' 2.5" DJ. Includes storage pan to rear of crosslays. | $4,876 |
| 3310-0406 | Boxed out rear ladder tunnel doors. Vertically hinged smooth plate aluminum. Doors to hinge on outboard sides and latch in the middle. D-ring to be on right hand "primary" door. Doors to match rear body finish. | $1,181 |
| 3310-0407 | Compartment door drip rail provided over each wheel well cribbage storage compartment(s). Only available with tandem axle wheel well storage compartment option. | $203 |
| 3310-0408 | Upgrade the aerial turntable access steps to include cutouts with Grip Strut inserts IPO Gator Grip. | $541 |
| 3310-0409 | Body wheelwell compartments for a total of (4) shall be as follows: (1) each side centered over forward wheel approx 20" W and (1) each side centered over rearward wheel approx 24" W both sides x 6" H x maximum depth permissible without interference with hydraulic line(s) reservoir(s) etc. A gasketed drop down door shall be installed on each compartment. Door material to match wheelwell finish. | $1,420 |
| 3310-0410 | Relocate fuel fill as high as possible at rear of body. | $480 |
| 3310-0411 | Crosslay triple (3) 6.00" wide single stack to hold up to 200' of 2.0" DJ or 150'-200' 2.5" DJ. Includes storage pan to rear of crosslays. | $3,670 |
| 3310-0412 | Jack leg opening covers polished stainless steel (4) sets. Includes outrigger covers and fixed filler panels. | $1,289 |
| 3310-0413 | Storage shall be provided for one (1) customer supplied Junkin JSA-200 stokes basket in L2/R2 transverse compartment. Includes the transverse floor extended out to door opening on each side and one horizontal fixed shelf offset approximately 8.5" above transverse floor. | $394 |
| 3310-0414 | Long handle tool storage box w/lift-up hinged cover. Box to be diamond plate approx 18" wide x 74" long x 14" tall. Lid hinged on outboard side with 1.5" lip all sides chrome grab handle (2) thumb latches (3) EON LED lights mounted to lid to illuminate interior when open and gas spring hold-opens (Note lid to open up to 90 degrees). Locate on top of body officer side just to rear of R2 extended high side. | $1,466 |
| 3310-0415 | Compartments driver side HP100 Platform SideStacker with 300g tank. Includes rescue style extended height compartments and separate rear side compartments. The door on small compt next to rear outrigger to match wheelwell. | $42,861 |
| 3310-0416 | Recessed tubes for (5) pike poles and (1) NY Hook. Not available on HP75 SideStacker. | $792 |
| 3310-0417 | Crosslay double (1)4.25"/(1)5.50" wide single stack to hold up to 200' of 2.0" DJ/150'-200' 2.5" DJ. Includes storage pan to rear of crosslays. | $2,705 |
| 3310-0426 | Boxed out rear ladder tunnel door. Smooth plate lift-up door to open 20 degrees past horizontal (degrees may be reduced due to other options). Door will match rear body finish. | $1,388 |
| 3310-0427 | Compartments officer side tandem axle HM100/110 SideStacker with 500 gallon tank. Includes rescue style extended height compartments ahead of wheel well compartment over forward tandem and extended hosebed. | $32,791 |
| 3310-0428 | Compartments driver side tandem axle HM100/110 SideStacker with 500 gallon tank. Includes rescue style extended height compartments ahead of wheel well. | $42,776 |

| Item No. | Description | |
|---|---|---|
| 3310-0429 | Crosslay triple 6" wide single stack to hold up to 200' of 2.0" DJ (each) or 150'-200' 2.5" DJ (each). Includes storage pan to rear of crosslays. | $3,670 |
| 3310-0432 | Crosslay quad w/dry lay. All to be 31" deep (to 3x3) with approx 28" high dividers. Includes (3) 5.5" wide single stack crosslays to hold up to 200' of 2.0" DJ or 200' of 2.5" DJ (each) and (1) 6" wide dry lay for up to 150-200' of 3.0" DJ. Includes storage pan to rear of crosslays (if applicable). | $5,100 |
| 3310-0433 | Pike pole/Ladder storage. Available on HP75/78 SideStacker with tall R1 & HM100/110 SideStacker only. The pike pole tubes to accomodate New York roof hook pike poles. The access door to match the rear body finish. | $648 |
| 3310-0435 | Compartments officer side CR100/95 platform SideStacker with 300g tank. Includes rescue style extended height compartments (R1-R3) with extended hosebed. | $31,776 |
| 3310-0436 | Compartments driver side CR100/95 platform/CR137 SideStacker Med cab 240" W/B with 300g tank. Includes rescue style extended height compartments (L1-L3) and 18" wide rear staircase. | $42,564 |
| 3315-0030 | System shall consist of a Space Saver 2 bottle fill station offset against rearward wall and control panel with provisions to have low pressure system which includes controls for E-One supplied air reel and air outlet port. Control panel shall be mounted in an E-One fabricated enclosure offset against forward wall located in L3. Haskel booster pump shall be provided in L3 mounted to fixed shelf just above breathing air system units. A (4) DOT bottle cascade system located in L1/R1 horizontally mounted to transverse floor offset as far forward as possible in an E-One supplied rack. | $38,687 |
| 3315-0036 | Storage rack for two DOT or ASME air bottles. Mounted either vertical or horizontal in a compartment or top of body. Locate top of body in upper storage beneath aerial offset forward transversely mounted ahead of aerial hydraulic reservoir. | $514 |
| 3315-0037 | Storage enclosure for breathing air system's control panel shall be provided. Located in L3 offset against forward wall. | $638 |
| 3315-0038 | System shall consist of a Space Saver 2 bottle fill station offset against rearward wall in L3 conpartment and control panel with provisions to have low pressure system which includes controls for E-One supplied air reel and air outlet port. Control panel shall be mounted in an E-One fabricated enclosure offset against forward wall located in L3. Haskel booster pump with E-One supplied diamond plate cover shall be located on compartment top over L4 offset forward. A (4) ASME bottle cascade system located top of body in upper storage beneath aerial offset forward transversely mounted ahead of aerial hydraulic reservior in an E-One supplied racks. | $41,518 |
| 3315-0044 | Storage rack for four (4) DOT or ASME air bottles. Mounted horizontal in roof top compartments. Locate two (2) each side in roof top compartments for dealer supplied and installed DOT/ASME bottles and Cascade system. | $833 |
| 3315-0063 | Storage enclosure for breathing air system's control panel shall be provided. Panel for (1) DOT tool system. Located in L3 between reels as high as possible. | $404 |
| 3315-0064 | Storage rack for One (1) DOT air bottle. Mounted vertical top of body in compartment L1 rearward to back wall. | $602 |
| 3315-0077 | Diamond plate enclosure for six (6) DOT breathing air bottles in open storage area beneath aerial. Note top of enclosure to be approx. 1" below top of body. | $1,789 |
| 3315-0078 | System shall consist of HYPRES single containment fill station with control fill panel. System includes all associated plumbing from cascade storage bottles to compartment with fill station. Locate: L3 | $25,644 |
| 3315-0079 | Enclosure for breathing air system control panel shall be provided. Locate: L3 above fill station. | $638 |
| 3315-0084 | Raceway for air lines between L2 & L3 compartments at upper rear corner and from open storage area to L2 compartment. | $610 |
| 3315-0085 | 2-Bottle DOT 6000 PSI Breathing Air Cascade System with Space Saver M2792M 2-bottle fill station in L2 offset against forward wall bottle rack and all associated air lines valves and gauges for Dealer supplied and installed air control panel. Includes Sierra Precision 12000A electric booster pump 30A/110V in L3 offset forward. Rack and bottles to be located in open storage area on officer side beneath aerial. | $22,162 |
| 3320-0001 | SCBA large tube bottle rack. Location: [#LOC]. | $103 |
| 3320-0002 | SCBA Small Tube Bottle Rack. Location: [#LOC] | $86 |
| 3320-0005 | SCBA Bottle Storage. (4) Cast Product SCBA bottle storage with gasketed doors. (2) each side in rear wheel well area. | $752 |
| 3320-0009 | SCBA Bottle Storage. (8) Cast Product SCBA bottle storage with gasketed doors. (4) each side in rear wheel well area. | $1,500 |
| 3320-0010 | SCBA Bottle Storage. (4) Cast Product SCBA bottle storage doors. (2) each side in rear wheel well area. Each tube to include a ribbed rubber insert mounted to rear of tube. | $676 |

| Item No. | Description | |
|---|---|---|
| 3320-0018 | SCBA Bottle Storage. (8) Fire Shopp SCBA bottle storage with hinged doors with push button latches. (4) officer side and (4) driver side in wheel well area. | $1,751 |
| 3320-0020 | SCBA Bottle Storage. (4) Fire Shopp SCBA bottle storage with hinged doors with push button latches. (2) officer side and (2) driver side in wheel well area. | $1,274 |
| 3320-0023 | SCBA Storage. (6) Cast Product SCBA bottle storage with gasketed doors. (3) each side rear wheel well area located in center and rearward positions. | $1,126 |
| 3320-0025 | SCBA Storage. (6) Cast Product SCBA bottle storage with gasketed doors. (4) Driver side rear wheel well area and (2) officer side (located either side of the rearward tandem wheel). | $1,126 |
| 3320-0031 | Zico metal QUIC-STORAGE bottle rack for large bottles for 6.1" to 7.4" cylinder. Locate in [#LOC]. Each unit will have straps to hold the bottle in and all top units will have a flat top. Each unit will be bolted together and be [#COL] PVC coated. | $140 |
| 3320-0032 | Zico metal QUIC-STORAGE for small bottles 5.3" to 5.8" cylinder. Locate in [#LOC]. Each unit will have straps to hold the bottle in an angle floor to hold bottle in place and all top units will have a flat top. Each unit will be bolted together and be [#COL] PVC coated. | $140 |
| 3320-0033 | SCBA/Wheel Chock Storage. (4) Cast Product SCBA bottle storage with gasketed doors two (2) each side centered between tandems. Four (4) wheel chock storage compartments with hinged doors (doors to match wheel well material) and push button latches located two (2) each side (1) forward and (1) rearward in each rear wheel well area for (1) SAC-44-E wheel chock to be stored per compartment. Does not include wheel chocks. | $2,972 |
| 3320-0042 | SCBA Bottle Storage. (8) Cast Product SCBA bottle storage with gasketed doors with locking latches. (4) each side in rear wheel well area. | $1,740 |
| 3320-0046 | SCBA Bottle Storage. (12) E-ONE SCBA bottle storage with hinged doors (doors to match wheel well material) with push button latches and one aluminum tray for each bottle. Each side of body to have (3) Double SCBA bottle storage compartments (1) forward (1) rearward and (1) between tandem offset to rear in wheel well area. | $1,693 |
| 3320-0053 | SCBA Bottle Storage. (4) E-ONE SCBA bottle storage with hinged doors (doors to match wheel well material) with push button latches. (2) officer side and (2) driver side in wheel well area. | $718 |
| 3320-0054 | SCBA Bottle Storage. (4) Fire Shopp SCBA double bottle storage with hinged doors and push button latches. (2) SCBA bottles forward and (2) SCBA bottles rearward each side in wheel well area. | $1,751 |
| 3320-0055 | SCBA Storage. (6) Fire Shopp SCBA bottle storage with hinged doors with push button latches. (4) Driver side rear wheel well area and (2) officer side (located either side of the rearward tandem wheel). | $1,909 |
| 3320-0059 | SCBA Bottle Storage. (6) Fire Shopp SCBA bottle storage with hinged doors with push button latches. (4) officer side and (2) in center on driver side in tandem wheel well area. | $1,313 |
| 3320-0061 | SCBA Bottle Storage. (4) Cast Product SCBA bottle storage doors. (2) each side in rear wheel well area. | $676 |
| 3320-0064 | SCBA/Fire Extinguisher Storage. Eight (8) storage compartments with hinged doors (doors to match wheel well material) and push button latches. Four each side in rear wheel well area. | $2,972 |
| 3320-0069 | PAC Cylinder Mate. Locate in [#LOC]. Each unit will be black in color and have a strap to secure bottle. | $241 |
| 3320-0072 | SCBA Bottle Storage. (8) Cast Product gasketed doors with (7) SCBA bottle storage tubes. (4) Cast Product SCBA bottle storage with gasketed doors on officer's side and (3) Cast Product SCBA bottle storage tubes with (4) gasketed doors on driver's side. Recessed fuel fill to be protected behind the rear driver side SCBA door. | $1,500 |
| 3320-0073 | SCBA bottle storage/Recessed fuel fill. (7) Fire Shopp style SCBA bottle storage with hinged polished stainless steel doors with push-button latches. (4) officer side (3) driver side and (1) recessed fuel fill with cast stainless housing and hinged SCBA style polished stainless steel door offset rearward in wheel well area. Note all doors to match. | $4,259 |
| 3320-0074 | SCBA Bottle Storage. (16) E-ONE SCBA bottle storage with hinged doors (doors to match wheel well material) with push button latches and one aluminum tray for each bottle. (8) officer side and (8) driver side in wheel well area. | $2,255 |
| 3320-0077 | SCBA/Wheel Chock Storage. (6) Cast Product SCBA bottle storage with gasketed doors (2) two driver side centered between tandem and (4) four officer side. Two (2) wheel chock storage compartments with hinged doors (doors to match wheel well material) and push button latches located (2) two driver side (1) forward and (1) rearward in rear wheel well area for (1) one SAC-44-E wheel chock to be stored in each compartment. Does not include wheel chocks. | $2,972 |
| 3320-0081 | Vision Mark tags (2) for driver side wheel well area SCBA bottle storage. Tags to have red letters on white background. (1) Tag forward inboard tube to read "WATER EXTINGUISHER". (1) Tag rearward inboard tube to read "DRY CHEM". | $108 |

| Item No. | Description | |
|---|---|---|
| 3320-0083 | SCBA Bottle Storage. (4) Fire Shopp SCBA double bottle storage for (8) bottles and (4) Fire Shopp SCBA single bottle storage for (4) bottles with hinged doors and push button latches (wired to door ajar). Double storage tubes located over forward tandem wheel and single storage tubes over rearward tandem wheel each side in rear wheel well area for a total of (12) SCBA bottles. | $3,022 |
| 3320-0087 | SCBA Bottle Storage. (4) E-ONE SCBA bottle storage with hinged doors. Doors are smooth aluminum plate painted job color (doors only) with push button latches. (2) officer side and (2) driver side in wheel well area. | $1,009 |
| 3320-0089 | SCBA Bottle Storage. (4) Fire Shopp SCBA bottle storage with hinged doors with push button latches with locking latches. (2) officer side and (2) driver side in wheel well area. | $1,483 |
| 3320-0090 | SCBA bottle storage. (7) E-ONE SCBA bottle storage hinged doors. Doors are smooth aluminum plate painted job color (doors only) with push button latches. (4) Officer side and (3) driver side in wheel well area. | $1,764 |
| 3320-0092 | PAC Cylinder Mate. Each unit will be black in color and have a strap to hold the bottle in. Locate: Inside rear body drivers side on top of counter top in rear most corner. | $241 |
| 3320-0094 | SCBA Storage. (6) Cast Product SCBA bottle storage with gasketed doors. (3) each side rear wheel well area located in center and forward positions. | $1,126 |
| 3320-0098 | SCBA/Wheel Chock Storage with hinged doors (doors to match wheel well material) with push button latches. (6) E-ONE SCBA bottle storage (2) two driver side centered between tandem and (4) four officer side. Two (2) wheel chock storage compartments located (2) two driver side (1) forward and (1) rearward in rear wheel well area for (1) one SAC-44-E wheel chock to be stored in each compartment. Does not include wheel chocks. | $2,972 |
| 3320-0107 | SCBA Bottle Storage. (4) Fire Shopp SCBA bottle storage with hinged doors with push button latches. (4) driver side only in wheel well area. Officer side SCBA not to be installed due to rear body plumbing options. Available only on commercial units with forward fuel tanks or custom applications with officer side only fuel fill. | $885 |
| 3320-0108 | SCBA Storage. (6) Cast Product SCBA bottle storage with gasketed doors. (3) each side rear wheel well area located in center and rearward positions. Note rear bottle tube support brackets to be welded to body IPO bolted. | $1,126 |
| 3320-0109 | Extinguisher Bottle Storage (PR). Includes hinged stainless steel door with push button latch and fabricated aluminum bottle tray. Each storage compartment 26" deep to fit Amerex 420 2.5 gallon H2O extinguisher at 8" diameter or Ansul 1-20-G extinguisher at 9" diameter. Locate driver and officer side in rear tandem wheel well offset forward. Wired to door ajar. | $2,828 |
| 3320-0113 | SCBA Bottle Storage. (8) E-ONE SCBA bottle storage with hinged doors (doors to match wheel well material) with push button latches. Note one aluminum tray for each bottle in double storage compartments. Each side of body to have (2) Double SCBA bottle storage compartments (1) offset forward and (1) offset rearward over each tandem wheel in wheel well area. | $1,267 |
| 3320-0116 | SCBA Bottle Storage. (10) E-ONE SCBA bottle storage with hinged doors (doors to match wheel well material) with push button latches. Note one aluminum tray for each bottle in double storage compartments. Each side of body to have (1) Double SCBA bottle storage compartment offset forward and (3) single storage compartments (2) between tandem and (1) offset to rear in wheel well area. | $1,693 |
| 3320-0121 | SCBA Bottle Storage. (4) Fire Shopp SCBA double bottle storage and (4) Fire Shopp SCBA single bottle storage with hinged doors and push button latches to store twelve (12) SCBA bottles. Locate (2) Double SCBA bottle storage compartments (1) offset forward over each tandem wheel and (2) single storage compartments (1) offset rearward over each tandem wheel in wheel well area. | $2,508 |
| 3320-0123 | SCBA Bottle Storage. (12) E-ONE SCBA bottle storage with hinged doors (doors to match wheel well material) with push button latches. Note one aluminum tray for each bottle in double storage compartments. Each side of body to have (2) Double SCBA bottle storage compartments (1) offset forward over each tandem wheel and (2) single storage compartments (1) offset rearward over each tandem wheel in wheel well area. | $1,899 |
| 3320-0126 | SCBA/Wheel Chock Storage. (6) Fire Shopp SCBA bottle storage doors (2) two driver side centered between tandem and (4) four officer side. Two (2) wheel chock storage compartments with hinged doors (doors to match wheel well material) and push button latches located (2) two driver side (1) forward and (1) rearward in rear wheel well area for (1) one SAC-44-E wheel chock to be stored in each compartment. Does not include wheel chocks. | $2,972 |
| 3320-0128 | SCBA Bottle Storage. (3) E-ONE SCBA bottle storage with hinged doors (doors to match wheel well material) with push button latches. (3) driver side ONLY in wheel well area. | $550 |
| 3320-0131 | SCBA Bottle Storage. (4) Fire Shopp SCBA bottle storage with hinged doors with push button latches. (2) officer side and (2) driver side in 2 bottle pods in forward wheel well areas only. | $1,274 |

| Item No. | Description | |
|---|---|---|
| 3320-0133 | Extinguisher Bottle Storage (PR). Includes hinged stainless steel door with push button latch and fabricated aluminum bottle tray. Each storage compartment 26" deep to fit Amerex 420 2.5 gallon H2O extinguisher at 8" diameter or Ansul 1-20-G extinguisher at 9" diameter. Locate officer side in rear tandem wheel well one forward and one rearward. Wired to door ajar. | $2,828 |
| 3320-0134 | SCBA Storage. (6) Cast Product SCBA bottle storage with gasketed doors. . (4) Driver side rear wheel well area and (2) officer side (located center between of the rearward tandem wheel). | $1,126 |
| 3320-0135 | SCBA Bottle Storage. (4) Cast Product SCBA bottle storage with gasketed doors. Officer side in rear tandem wheel well area. | $752 |
| 3320-0137 | SCBA Bottle Storage. (2) Fire Shopp SCBA double bottle storage with hinged doors and push button latches. (2) SCBA bottles forward each side of body in wheel well area. | $876 |
| 3320-0140 | SCBA Bottle Storage. (4) E-ONE SCBA bottle storage with hinged doors (doors to match wheel well material) with push button latches. (2) officer side and (2) driver side in forward wheel well areas. | $718 |
| 3320-0141 | Extinguisher Bottle Storage (PR). Includes hinged door (doors to match wheel well material) with push button latch and fabricated aluminum bottle tray. Each storage compartment 26" deep to fit Amerex 420 2.5 gallon H2O extinguisher at 8" diameter or Ansul 1-20-G extinguisher at 9" diameter. Locate driver and officer side in rear tandem wheel well offset forward. Wired to door ajar. | $2,828 |
| 3320-0142 | SCBA Bottle Storage. (8) E-ONE SCBA bottle storage with hinged doors (doors to match wheel well material) with push button latches. Note one aluminum tray for each bottle in double storage compartments. Each side of body to have (1) Double SCBA bottle storage compartment offset forward over each rear tandem wheel and (2) single storage compartments (1) offset rearward over each tandem wheel in wheel well area. | $1,434 |
| 3320-0147 | Extinguisher Bottle Storage. Includes hinged stainless steel door with push button latch and fabricated aluminum bottle tray. Storage compartment 26" deep to fit Amerex 420 2.5 gallon H2O extinguisher at 8" diameter or Ansul 1-20-G extinguisher at 9" diameter. Locate driver side in rear tandem wheel well offset forward. | $1,414 |
| 3320-0151 | SCBA/Fire Extinguisher Storage. (12) E-ONE SCBA bottle and Fire Extinguisher storage with hinged doors (doors to match wheel well material) with push button latches. Note one aluminum tray for each SCBA bottle in double storage compartments. Each side of body to have (2) Double SCBA bottle storage compartments (1) offset forward over each tandem wheel and (1) single storage compartment offset rearward over forward tandem wheel and Fire Extinguisher storage compartment offset to rear over rearward tandem wheel. | $2,326 |
| 3320-0153 | SCBA/Wheel Chock Storage. (3) E-ONE SCBA double bottle storage compartments with hinged doors (doors to match wheel well material) with push button latches. Includes one aluminum tray for each bottle for total of (6) SCBA bottles (4) officer side and (2) driver side in wheel well area. Storage compartment with hinged door and push button latch driver side in forward wheel well area for (2) NON-folding AC-44 Zico wheel chocks. Does not include wheel chocks. | $2,238 |
| 3320-0157 | SCBA/Wheel Chock Storage. (9) E-ONE SCBA bottle and Wheel Chock storage with hinged doors (doors to match wheel well material) with push button latches. Note one aluminum tray for each SCBA bottle in double storage compartments. Officer side to have (2) Double SCBA bottle storage compartments (1) offset forward over each tandem wheel and (2) single storage compartments (1) offset rearward over each tandem wheel. Driver side of body to have (1) Double SCBA bottle storage compartment offset forward over rear tandem wheel and (1) single storage compartment offset rearward over forward tandem wheel with (2) Wheel Chock storage compartments (1) forward and (1) rearward in rear wheel well area. One (1) SAC-44-E wheel chock to be stored in each compartment. Does not include wheel chocks. | $2,326 |
| 3320-0161 | SCBA Bottle Storage. (4) E-ONE SCBA bottle storage with hinged doors (doors to match wheel well material) with push button latches. (2) officer side and (2) driver side in rearward wheel well areas. | $718 |
| 3320-0170 | SCBA/Wheel Chock Storage. (6) Fire Shopp SCBA bottle storage doors (3) three each side. Two (2) wheel chock storage compartments with bushed stainless steel hinged doors and push button latches located (1) one each side offset forward in rear wheel well area for (1) one SAC-44-E wheel chock to be stored in each compartment. Does not include wheel chocks. | $2,972 |
| 3320-0173 | SCBA/Oxygen Bottle Storage. (4) Fire Shopp SCBA bottle storage with hinged doors with push button latches. (2) officer side and (2) driver side in wheel well area. The (2) forward tubes shall hold "D" sized oxygen bottle (1) each side the (2) rear tubes to hold SCBA bottles (1) each side. | $1,754 |

| Item No. | Description | |
|---|---|---|
| 3320-0182 | E-ONE (1) SCBA bottle storage in rear wheel well with hinged door and push button latch. Door material to match wheel well material. Door shall cover the recessed fuel fill if located adjacent to the SCBA storage. | $257 |
| 3320-0183 | E-ONE (2) SCBA bottle storage in rear wheel well with hinged door and push button latch. Door material to match wheel well material. | $387 |
| 3320-0184 | E-ONE designed (3) SCBA bottle storage in rear wheel well with hinged door and push button latch. Door material to match wheel well material. | $602 |
| 3320-0185 | Fire Shopp brand (1) SCBA bottle storage in rear wheelwell with hinged door and push button latch. Door shall have a brushed stainless steel finish. Door shall NOT cover the recessed fuel fill if located adjacent to the SCBA storage. | $321 |
| 3320-0186 | Fire Shopp brand (2) SCBA bottle storage in rear wheelwell with hinged door and push button latch. Door shall have a brushed stainless steel finish. | $499 |
| 3320-0188 | E-ONE designed Wheel Chock storage compartment in rear wheel well with hinged door and push button latch. Door material to match wheel well material. Storage area shall hold (2) Zico Model SAC-44-E or comparable Wheel Chocks (not included). | $430 |
| 3320-0189 | E-ONE Speedy Dry storage compartment in rear wheel well hinged door and push button latch. Door material to match wheel well material. Includes a slide out bin (sanded finish) with hinged lid on top and grab handle on front. Capacity: Approximately 35 lbs of Speedy Dry absorbent material. | $1,116 |
| 3325-0001 | E-ONE designed PTO driven HRT system 9000-10500 PSI system with 4 tool capability. | $43,936 |
| 3325-0003 | E-ONE designed PTO driven HRT system 9000-10500 PSI system with 2 tool capability. | $32,820 |
| 3325-0004 | XRT Hydraulic tool system with 2 tool capability. 10500 PSI system. Includes selector vlv for each reel hyd res / filter and remote cooler. Requires gen with XRT hyd pump. | $22,568 |
| 3325-0008 | TNT PTO-TWIN Hydraulic tool system with 2 tool capability. 10500 PSI system. Requires Harrison gen with IHT configuration. Pump location: [#LOC] | $12,613 |
| 3325-0009 | XRT Hydraulic tool system with 3 tool capability. 5000 PSI system. Includes selector vlv for each reel hyd res / filter and remote cooler. Requires gen with XRT hyd pump. | $25,365 |
| 3325-0010 | XRT Hydraulic tool system with 2 tool capability. 5000 PSI system. Includes selector vlv for each reel hyd res / filter and remote cooler. Requires gen with XRT hyd pump. | $26,428 |
| 3325-0014 | XRT Hydraulic tool system with 3 tool capability. 10500 PSI system. Includes selector vlv for each reel hyd res / filter and remote cooler. Requires gen with XRT hyd pump. | $25,365 |
| 3325-0018 | There will be a thru shaft for the generator to work off the same PTO as HRT system. | $2,253 |
| 3325-0019 | E-ONE HRT hydraulic outlet control panel for Amkus tools. Location: driver and officer side front bumper. | $2,293 |
| 3325-0021 | Genesis Mach III Hydraulic tool system with 2 tool capability. 10000 PSI system. Requires Harrison gen with IHT configuration. Pump location: [#LOC]. | $15,711 |
| 3325-0022 | XRT Hydraulic tool system with 1 tool capability. Includes selector vlv for each reel hyd res / filter remote cooler and hydraulic pump. Requires Smart Power Liberator generator. | $20,008 |
| 3325-0024 | XRT PTO driven HRT system 5000 PSI system with 2 tool capability. | $29,916 |
| 3330-0001 | Slide-out platform integral driver side running board (includes hand rail as applicable). | $1,416 |
| 3330-0002 | Slide-out platform rollerless. Includes chrome grab handle centered on the front face of the platform (includes hand rail as applicable). Located [#LOC]. | $1,371 |
| 3330-0003 | Rear slideout platform - rollerless HP75 / HP78 SideStacker 36" wide located below hosebed. Includes a chrome grab handle centered on the frt face of the platform and a handrail below hosebed. | $1,026 |
| 3330-0004 | Slideout platform-recessed rear. Located below hosebed. Includes a handrail below hosebed. Requires extended hosebed on HP100 CR100 and 92 Pltfrm SideStacker bodies. | $926 |
| 3330-0005 | Slideout platform-rollerless low profile style located below driver side pump panel. RLP only. | $919 |
| 3330-0007 | Folding Step. Location [#LOC]. Each location requires a minimum of (1) handrail per NFPA. | $133 |
| 3330-0008 | Handrail up to 12". Location [#LOC]. | $117 |
| 3330-0023 | Slideout platform-integral officer side running board. Not available with a front suction (includes handrail as applicable). | $1,416 |
| 3330-0029 | Intermediate pump panel step officer side with forward tapered corner. Includes (1) lower and (1) upper folding step with (1) handrail and (1) recessed step light located above the intermediate step. Step light to be switched thru work light in cab. | $959 |
| 3330-0030 | Intermediate pump panel step officer side with forward tapered corner. Includes (2) lower and (1) upper folding step with (1) handrail and (1) recessed step light located above the intermediate step. Step light to be switched thru work light in cab. | $1,084 |
| 3330-0042 | Hansen white LED body hand rails upgrade package (includes pump module if applicable). | $1,374 |
| 3330-0059 | Zico swing-out access ladder with 4 rungs on main ladder and 2 rungs on swing down ladder. Locate on right side of pump module offset to rear. | $1,969 |

| Item No. | Description | |
|---|---|---|
| 3330-0072 | Hansen red LED body handrails upgrade package (includes pump module if applicable). | $1,374 |
| 3330-0075 | Slideout platform - SlideMaster. Location: [#LOC]. | $1,808 |
| 3330-0079 | Slide-out platform rollerless. Includes chrome grab handle centered on the front face of the platform (includes hand rail as applicable for body mounted locations) and required step lighting. Located [#LOC]. | $923 |
| 3330-0086 | Below body step (PR) bolt-on. Locate on right side of body forward and rearward of rear outrigger. Steps to be approx 12" wide with gator grip top surface. Each step to include a horizontal handrail on side of body. Requires aux jack pad to be located to rear of rearward step. For use with extended HB body only. | $902 |
| 3330-0100 | Step below body. Located below [#LOC]. Each location requires a minimum of (1) handrail / handhold per NFPA. | $352 |
| 3330-0102 | Handrail 18" (PR) located one each side at front of body for use when entering or exiting rear cab doors. | $379 |
| 3330-0105 | Dual lighted LED folding step. Location: [#LOC]. Each location requires a minimum of (1) handrail per NFPA. | $126 |
| 3330-0114 | Intermediate pump panel step officer side with forward tapered corner. Includes (1) lower and (1) upper dual LED lighted CPI folding step and a minimum of (1) handrail as req to meet NFPA. Step lights to be switched thru work light in cab. | $953 |
| 3330-0115 | Intermediate pump panel step officer side with forward tapered corner. Includes (2) lower and (1) upper dual LED lighted CPI folding step and a minimum of (1) handrail as req to meet NFPA. Step lights to be switched thru work light in cab. | $1,076 |
| 3330-0125 | Slideout platform-integral driver side running board (includes handrail as applicable). The platform step to be smooth plate with gator grip painted black durabak. | $1,702 |
| 3330-0128 | Diamond plate step (approx. 12"w) with Gator Grip at center rear of body even with top of body to provide additional top deck area. Step to have tappered ends left and right and 1" lip extending up. Available on SideStacker style bodies only. | $770 |
| 3330-0130 | Diamond plate gator grip overlay to be located on driver and officer compartment tops forward body and compartment tops ahead of turntable. | $746 |
| 3330-0139 | Step below side intake / discharge panel (PR). Embossed dia plt with supports. Each location requires a minimum of (1) handrail / handhold per NFPA. eMAX only. | $1,376 |
| 3330-0147 | Slideout platform with OnScene Solutions slide 81900 step series rated at 500lbs. Platform sized as required per location and includes handrail (as applicable for body mounted locations). Location: [#LOC]. | $2,014 |
| 3330-0150 | Intermediate pump panel step officer side without taper. Includes (1) lower and (1) upper dual LED lighted CPI folding step and a minimum of (1) handrail as req to meet NFPA. Step lights to be switched thru work light in cab. | $953 |
| 3330-0158 | Step below side intake / discharge panel (PR). Gator grip diamond plate. Each location requires a minimum of (1) handrail / handhold per NFPA. eMAX only. | $1,052 |
| 3330-0165 | Handrail 24". Location [#LOC]. | $211 |
| 3330-0166 | Handrail 12". Location: Mount on rear of truck at E-One discretion. | $117 |
| 3330-0170 | Slideout platform-roller-less. Includes chrome grab handle and retaining pin centered on the front face of the platform (includes handrail as applicable for body mounted locations) and required step lighting. Located: [#LOC]. | $923 |
| 3330-0174 | Slideout platform-rollerless. Includes chrome grab handle centered on the front face of the platform (includes hand rail as applicable). The platform step to be smooth plate with gator grip painted black durabak. Located [#LOC]. | $1,643 |
| 3330-0185 | Step below side intake / discharge panel (PR). Gator grip plate constructed of 1/8" (.125") aluminum smooth plate with black Scorpion coating (rough finish) IPOS diamond plate. Each location requires a minimum of (1) handrail / handhold per NFPA. eMAX only. | $1,336 |
| 3330-0188 | Hansen green LED body hand rails upgrade package (includes pump module if applicable). | $1,374 |
| 3330-0190 | Step below side intake / discharge panel (PR). Smooth plate aluminum with gator grip painted black durabak. Each location requires a minimum of (1) handrail / handhold per NFPA. eMAX only. | $1,263 |
| 3330-0200 | Step flop down rear 16" wide rung type (PR) IPO pocket step at rear side staircases. | $973 |
| 3330-0204 | Diamond plate step (approx. 12"w) with Gator Grip at center rear of body even with top of body to provide additional top deck area. Step to have square ends left and right and 1" lip extending up. Available on SideStacker style bodies only. | $770 |
| 3330-0207 | Hansen blue LED body hand rails upgrade package (includes pump module if applicable). | $1,374 |
| 3330-0209 | Slide-out platform rollerless. Includes chrome grab handle centered on the front face of the platform (includes hand rail as applicable). Located below tailboard centered and the step area the same width as the access ladder. | $1,371 |

| Item No. | Description | |
|---|---|---|
| 3330-0210 | Handrail 12". Install 12" handrails on the upper flat section above the speedlays for easier access to the top mount pump panel walkway. | $117 |
| 3330-0212 | (2) Dual lighted LED folding steps. Location: Side by side centered on front pump module access door above walkway to aid pump operator in reaching and operating deck gun from crosswalk area. Includes reinforced 3/16" diamond plate pump access door. Each location requires a minimum of (1) handrail per NFPA. | $355 |
| 3330-0215 | Step flop down rear 12" wide rung type (PR). Painted Durabak black. | $1,231 |
| 3330-0229 | Diamond plate step (approx. 8"w) with Gator Grip at center rear of body full width even with top of body to provide additional top deck area. Step to have tapered ends left and right with 1" lip extending up. Includes (2) two gussets one each side inboard of upper rear warning lights. Available on SideStacker style bodies only. | $1,067 |
| 3330-0231 | Slide-out platform rollerless to be painted Durabak black. Includes chrome grab handle centered on the front face of the platform (includes hand rail as applicable). Located [#LOC].. | $3,425 |
| 3330-0232 | Step below side intake / discharge panel (PR) to be painted Durabak black.. Smmoth plate. Each location requires a minimum of (1) handrail / handhold per NFPA. eMAX only. | $1,316 |
| 3330-0240 | Step staircase access treadplate with Gator Grip. Pair.Locate: Rear of body 1 step each side of staircase for access to staircase from tailboard. | $579 |
| 3330-0242 | Flop down 36" wide step (EA) fabricated from .125" diamond plate with gator grip to be located at rear of body for access to turntable. Includes mechanical lock to store in the up and stored position. | $1,636 |
| 3330-0244 | Diamond plate step w/Gator Grip at rear of body even with top of body. Located between beavertail aerial access staircases over ladder tunnel to provide additional stepping surface. Available on aerial center hosebed style bodies only. | $538 |
| 3330-0245 | LINE-X Package for step below body (each). | $134 |
| 3330-0256 | Hansen amber LED body hand rails upgrade package (includes pump module if applicable). | $1,374 |
| 3330-0257 | Upper rear turntable handrails shall have (2) two additional horizontal handrails spaced approximately 14" off the top and bottom of each of the main rails. | $667 |
| 3330-0263 | Intermediate pump panel step driver and officer side without taper below crosslays. Intermediate steps to be 8" wide and made of embossed diamond plate. Includes (2) lower and (1) above dual LED lighted CPI folding steps each side and a minimum of (1) handrail as required to meet NFPA. Step lights to be switched thru work light in cab. (officer side requires vertical hinged pump panel) | $2,098 |
| 3330-0269 | Dual lighted LED Signature4 folding step. Location: [#LOC]. Each location requires a minimum of (1) handrail per NFPA. | $184 |
| 3330-0275 | Intermediate pump panel step officer side with forward tapered corner. Includes (1) lower and (1) upper Innovative Controls dual LED lighted folding step with (1) handrail and (1) recessed step light located above the intermediate step. Step light to be switched thru work light in cab. | $999 |
| 3330-0276 | Intermediate pump panel step officer side with forward tapered corner. Includes (2) lower and (1) upper Innovative Controls dual LED lighted folding step with (1) handrail and (1) recessed step light located above the intermediate step. Step light to be switched thru work light in cab. | $1,137 |
| 3330-0279 | Innovative Controls dual lighted LED folding step. Location: [#LOC]. Each location requires a minimum of (1) handrail per NFPA. | $186 |
| 3330-0280 | Intermediate pump panel step officer side with forward tapered corner. Includes (1) lower and (1) upper Innovative Controls duall LED lighted folding step and a minimum of (1) handrail as req to meet NFPA. Step lights to be switched thru work light in cab. | $994 |
| 3330-0281 | Intermediate pump panel step officer side with forward tapered corner. Includes (2) lower and (1) upper Innovative Controls dual LED lighted folding step and a minimum of (1) handrail as req to meet NFPA. Step lights to be switched thru work light in cab. | $1,137 |
| 3330-0283 | Handrail 18" (PR) located on each side inboard of beavertails up high angled to assist in access to aerial device. | $379 |
| 3330-0284 | Hansen red LED body hand rails upgrade package (includes pump module if applicable). | $1,374 |
| 3330-0285 | Handrail 18". Location: Officer side above pump panel and below E-One logo. | $176 |
| 3330-0294 | Diamond plate gator grip overlay to be located on driver side forward compartment top. | $178 |
| 3330-0295 | Diamond plate gator grip overlay to be located on officer side forward compartment top. | $178 |
| 3330-0302 | Slide-out intermediate step. Includes hand hold notch centered on the front face of the step and required step lighting. Located on the rear body. | $1,153 |
| 3340-0003 | Cast Products recessed fuel fill with door. | $135 |
| 3340-0015 | Diamond plate single axle wheel well. Includes bolt-on composite wheel well liners and aluminum trim fenderettes. | $1,162 |

| Item No. | Description | |
|---|---|---|
| 3340-0027 | Diamond plate corner guards for the driver and officer front compartment face. Guards to wrap around the corner and be full height of side assembly or to a max of 96". | $217 |
| 3340-0034 | The hinged door(s) of [#LOC] to have door louvers for additional ventalation. | $168 |
| 3340-0035 | Divider Long. To run full length of hose bed (front to rear). | $513 |
| 3340-0036 | Body compartment interiors to have a swirled finish. Includes pan or hinged door as applicable. | $2,184 |
| 3340-0041 | Removable number plate with mounting brackets. Locate [#LOC]. Plate to be painted job color. Lettering and/or graphics not included. | $282 |
| 3340-0049 | Hosebed storage pan. Locate in forward area of hosebed. | $770 |
| 3340-0051 | Reinforce flooring of compartment [#LOC] for storage of heavy equipment. | $337 |
| 3340-0052 | Stainless steel trim on bottom edge of compartment opening of [#LOC]. | $128 |
| 3340-0055 | Cast Products recessed fuel fills with doors for dual fuel fill application. | $459 |
| 3340-0059 | Recessed fuel fills for dual fuel fill application (1) each side in rear wheel wells. | $261 |
| 3340-0061 | The walls of compartment [#LOC] to have additional louvers for additional ventilation. | $86 |
| 3340-0062 | Divider medium. To run full length of hose bed (front to rear) behind single fill tower. | $460 |
| 3340-0067 | Turtle Tile Brand [#COL] Floor Matting covering all applicable Compartment Floors Shelves and Rollout Trays. | $1,110 |
| 3340-0077 | Body compartment Interiors to have Zolatone gray finish. To include pan of hinged doors and tool compartments (as applicable). Does not include floors if they are dia plt. | $5,463 |
| 3340-0078 | Body compartment Interiors and compartment mounted components (shelves trays toolboardsetc.) to have Zolatone gray finish. To include pan of hinged doors and tool compartments (as applicable). Does not include floors if they are dia plt. | $11,589 |
| 3340-0088 | Smooth plate single axle wheel well painted job color. Includes bolt-on composite wheel well liners. | $1,683 |
| 3340-0089 | Turtle Tile Brand [#COL] Floor Matting covering all applicable Compartment Floors Shelves and Rollout Trays. | $1,789 |
| 3340-0090 | Turtle Tile Brand [#COL] Floor Matting covering all applicable Compartment Floors Shelves and Rollout Trays. | $2,436 |
| 3340-0093 | Mud flaps rear black with E-ONE logo. | $170 |
| 3340-0102 | Angled (Boston style) style tailboard corners. | $463 |
| 3340-0107 | Diamond plate tandem axle wheel well. Includes bolt-on composite wheel well liners and fenderettes. | $2,317 |
| 3340-0108 | Smooth plate tandem axle wheel well painted job color. Includes bolt-on composite wheel well liners and fenderettes. | $3,359 |
| 3340-0109 | Power vent system located in [#LOC]. Includes timer and is run from shorepower inlet. | $201 |
| 3340-0111 | Horizontal ladder bracket. Location and type of ladder: [#LOC]. | $269 |
| 3340-0124 | Upgrade runningboards to 3/16" diamond plate. | $97 |
| 3340-0125 | Directonal light bar to be recess mounted. Located on rear area of body. | $415 |
| 3340-0132 | Diamond plate single axle wheel well. Includes fenderettes and bolt-on aluminum wheel well liners painted job color. | $2,317 |
| 3340-0141 | Label package for Memphis units only to include labeling of removable panels to indicate what is behind. | $103 |
| 3340-0147 | Louver Guards. All lower body compartment louvers to have protective guard provided on exterior of compartments. Guards to prevent road spray from entering compartments. | $556 |
| 3340-0151 | Dri-Dek Brand [#COL] floor matting covering all applicable body compartment floors shelves and rollout trays. | $1,714 |
| 3340-0152 | Dri-Dek brand [#COL] floor matting covering all applicable compartment floors shelves and rollout trays. | $2,362 |
| 3340-0154 | Mud flaps rear black with no logo. | $170 |
| 3340-0158 | Underbody splash guard behind rear axle mounted to body. | $548 |
| 3340-0166 | Partition bolt-in vertical partition wall. Locate in [#LOC]. | $227 |
| 3340-0174 | Stokes basket storage compartment. Locate in [#LOC] with a strap(s) to hold basket in rack. | $759 |
| 3340-0176 | Swirl plate single axle wheel well with clear coat finish. Includes bolt-on composite wheel well liners. | $1,785 |
| 3340-0187 | Sign "Stay Back 150 Metres" with black reflective lettering. Locate below rear of body. | $139 |
| 3340-0200 | Removable slat flooring. Location: [#LOC] | $279 |
| 3340-0203 | Bracket Hooligan tool mount [#LOC] | $168 |
| 3340-0207 | Piping cover to be located in compartment [#LOC]. Includes compartment wall cut-outs for piping. | $471 |
| 3340-0215 | Divider Long. To run full length of hosebed (front to rear). Divider height to half of hosbed depth (top to bottom). For use with low hosebed configurations only. | $513 |

| Item No. | Description | |
|---|---|---|
| 3340-0218 | Sign "Stay Back 500FT". White plate with red reflective lettering. Locate low on rear of body / body doors. | $139 |
| 3340-0220 | Body compartment Interiors to have Zolatone black finish. To include pan of hinged doors (as applicable). Does not include floors if they are dia plt. | $5,463 |
| 3340-0239 | Recessed fuel fills for dual fuel fill applications. Fills located (1) each side top rear of tractor body. | $261 |
| 3340-0249 | Stokes basket storage on forward top of body officer side. | $522 |
| 3340-0258 | A deflector shield will be placed in front of the light tower or A/C system. Deflector will be in front of the forward most component. | $968 |
| 3340-0264 | License plate sized number plate. Locate in license plate bracket(s). Plate to be painted job color. Lettering and/or graphics not included. | $220 |
| 3340-0267 | Stokes/backboard storage rack. Stokes rack for 8''W x 24''H x 84''L basket with backboard sleeves for (2) backboards 2.5''W x 18''H x 84''L forward of rack. Includes restraining strap for stokes and backboards on each side. Location: L1/R1 transverse rear wall. | $984 |
| 3340-0269 | Diamond plate tandem axle wheel well. Includes bolt-on alum wheel well liners (un-painted) and fenderettes. | $2,864 |
| 3340-0272 | Sign "Stay Back 500FT" with black reflective lettering. Locate B1 door above D-ring. | $139 |
| 3340-0277 | Pass through in compartment ceiling for cord reel cable / hyd hose. For use with compts that have a ceiling spaced away from compt top. Loc: [#LOC] | $886 |
| 3340-0278 | Diamond plate tandem axle wheel well. Includes bolt-on painted job color alum wheel well liners and fenderettes. | $3,340 |
| 3340-0281 | Backboard storage compartment for (2) boards. [#LOC]. Includes retaining strap for boards. | $707 |
| 3340-0283 | Horizontal ladder bracket. Location and type of ladder: [#LOC]. | $269 |
| 3340-0286 | Mounting bar for 36" long roll of sheet plastic. Includes "U" brackets on each end and quick release pins to hold bar to brackets. Bar to be up high in compt positioned for a 10" dia roll. Loc: [#LOC]. | $564 |
| 3340-0287 | Lip 2" high along lower compartment door opening just inside door. Loc: [#LOC]. | $152 |
| 3340-0289 | Stokes basket storage on forward top of body driver side for storage of a CMC Rescue-CMC Pro Series Model #726112-T1 stokes basket. | $522 |
| 3340-0309 | Sign "Keep Back 300FT". White plate with red reflective lettering. Locate on rear ladder access door. | $139 |
| 3340-0328 | Hosebed partition. Locate at rear of hosebed approx 9.25" from right side wall extend 90" forward and taper at 45 degrees to right hosebed side wall. Partition to be .25" al plt with sanded finish. | $675 |
| 3340-0335 | Cast Products pass thru with door. There will be a sealed pass thru from the outside of the truck to the inside for wires. Opening size 5-7/16"T x 5-5/8"W. Locate [#LOC]. | $135 |
| 3340-0337 | Hosebed divider with 45 degree offset to store customer required hose load. Rear section of divider approx. 94.5" to rear of offset and forward section of divider approx. 102.5" ahead of offset. HP75/78 only. | $756 |
| 3340-0358 | Backboard storage sleeve for (1) board. 4"H x 20"W x 76"L. Includes (2) retaining straps (1) each side for boards. Location: Horizontally mounted through L3/B1/R3. | $707 |
| 3340-0374 | Sign "Stay Back 300FT" with black reflective lettering. Locate below rear of body. | $139 |
| 3340-0376 | Diamond plate single axle wheel well. Includes fenderettes and bolt-on aluminum wheel well liners sanded finish. | $2,096 |
| 3340-0388 | Brushed stainless steel rubrails for the sides of the body below the lower side compartments. | $780 |
| 3340-0392 | Underbody full width mudflap behind rear axle (as applicable) mounted to body. | $646 |
| 3340-0396 | A deflector shield will be placed in front of the light tower or A/C system. Deflector will be in front of the forward most component. Deflector will be painted [#COL]. | $1,205 |
| 3340-0400 | Backboard storage compartment for (2) boards in transverse. Location: [#LOC]. Includes retaining straps on both sides for boards. | $707 |
| 3340-0405 | Sign "STAY BACK 500 FEET" with black reflective lettering. Locate below rear of body. | $139 |
| 3340-0406 | Sign "Stay Back 150 Metres" with black reflective lettering. Locate below rear of body. | $139 |
| 3340-0413 | Wheel Chocks 44" NFPA Complaint - Pair of Zico SAC-44. Up to 44" diameter Tires. Includes mounting bracket. Locate [#LOC]. | $672 |
| 3340-0464 | Rubrail spaced .50" away from body IPOS. | $234 |
| 3340-0471 | Hosebed partition. Locate at rear of hosebed approx 9.25" from left side wall extend 86" forward and taper at 45 degrees to left hosebed side wall. Partition to be .25" al plt with sanded finish. | $675 |
| 3340-0474 | Body Cab and Aerial Tags in French to replace standard English E-One supplied Tags. Includes pump panel and multiplex display if applicable. | $1,576 |

| Item No. | Description | |
|---|---|---|
| 3340-0476 | Stainless steel tandem axle rear fender panels painted job color. Includes bolt-on stainless steel wheel well liners (not painted) and polished stainless steel outer fenderettes. | $2,208 |
| 3340-0478 | Insulation shall be installed behind and / or below the body to protect the compartment(s) from excessive exhaust system heat. | $950 |
| 3340-0486 | Diamond plate single axle wheel well. Includes bolt-on composite wheel well liners and bolt-on polished alum fenderettes. | $1,052 |
| 3340-0487 | Backboard storage sleeve. Locate in ladder tunnel between PEL-24 and PRL-14. Sleeve to be approx 4''W x 19.625''H x 74''L. | $430 |
| 3340-0488 | Divider long for use with hosebed preconnect. Divider to be set back and/or notched at forward area of hosebed for access to preconnect line connection. | $513 |
| 3340-0490 | Sign "Stay Back 15 Meters" with black reflective lettering. Locate below rear of body. | $139 |
| 3340-0493 | Sign "Keep Back 150M". White plate with red reflective lettering. Locate on rear ladder access doors. | $139 |
| 3340-0495 | Fabricate and install a storz hose holder including Zico coupling mount (CM 3.0/4.0) for 4" hose at rear of body on officers side below pike pole storage. Fabricated from .125" alumimum diamond plate. | $571 |
| 3340-0496 | Louver Guards. All body compartment louvers to have protective guard provided on exterior of compartments. Guards to prevent road spray from entering compartments. | $556 |
| 3340-0497 | Storage bin with (4) cells each approx. 9"w x 9"h for square configuration. Located in L3 floor mounted offset rearward. | $444 |
| 3340-0498 | Storage bin approx. 24"w x 8"h. Located in R3 suspended from ceiling offset rearward. | $333 |
| 3340-0499 | Storage area to officer side of center hosebed divider. Area to include (from driver to officer side): (1) 10" H x 10" W. This includes (1) divider with square ends and hosebed style top. Remaining are to be for horizontally stored backboards (2). Area to be 6" H x remaining hosbed width with a hosebed style top (full length of hosebed).Each storage area to have a drop down diamond plate door with push button latching and each wired to door ajar indicator in cab. | $664 |
| 3340-0521 | All body and pump module compartments (if applicable) and/or storage areas to have no louvers or vents. | $277 |
| 3340-0522 | Vehicle number sign plate (painted job color) bolted on top of compartment top over R1. | $143 |
| 3340-0530 | Removable number plate with mounting brackets. Locate [#LOC]. Plate to be painted job color. Plate to be 12"W x 8"H. Lettering and/or graphics not included. | $269 |
| 3340-0541 | Cab Body and Pump Module safety and warning Tags in French to be in addition to standard English E-One supplied Tags. | $2,114 |
| 3340-0553 | Solid aluminum 1" x 3" bar stock rubrail with 45 degree mitered ends. Includes white Diamond Grade Scotchlite. | $1,044 |
| 3340-0554 | Aluminum smooth plate false back wall bolted-in 6" from outside of body. Locate in each L2 & R4 compartments. | $406 |
| 3340-0590 | Storage sleeve compartment in transverse. Location: L1/R1 just below rollup door drum centered on upper rear wall. Approximately 6"wide x 12"high x 72"long. Includes retaining straps on both sides. | $478 |
| 3340-0601 | Backboard storage compartment for (2) boards in transverse. Location: [#LOC]. Includes retaining straps on both sides for boards. | $707 |
| 3340-0606 | Diamond plate partition on inboard side of hydraulic generator in open storage area. | $364 |
| 3340-0614 | [#COL] edge trim for floor mounted Turtle Tile matting. Locate on door opening side only. Requires seperate floor matting option. | $391 |
| 3340-0628 | Entire top of body's diamond plate panels to be sand blasted to remove shine. | $711 |
| 3340-0636 | Fill Tower support bracket to be held 1/4" back from fill tower and attached to front hosebed wall. | $122 |
| 3340-0637 | Cover plates around rear frame mounted tow eyes in B1 compartment. | $122 |
| 3340-0640 | Bolt-in partition walls located as follows in hose bed (1) one partition side to side to rear of fill towers and (2) partitions located one each side to inside of each tower for additional storage space between fill towers. | $718 |
| 3340-0643 | Stainless steel trim for lower edge of rear mudflap (PR). The trim shall be 2" in height and go full width of the mudflap. The material shall be "polished" stainless steel and it will be mounted to the lower edge of the rear (back side) of the mudflaps. | $325 |
| 3340-0652 | Stainless steel trim for lower edge of front mudflap (PR). The trim shall be 2" in height and go full width of the mudflap. The material shall be "polished" stainless steel and it will be mounted to the lower edge of the rear (back side) of the mudflaps. | $325 |
| 3340-0653 | Diamond plate tandem axle wheel well. Includes bolt-on composite wheel well liners and bolt-on polished alum fenderettes. | $2,102 |
| 3340-0660 | Insulation to protect compartment from exhaust system heat. Locate in R2 lower back wall. | $950 |

| Item No. | Description | |
|---|---|---|
| 3340-0661 | Vehicle number sign plate (un-painted smooth plate) bolted on top of storage box over R1. Approx. size 16" x 24". | $135 |
| 3340-0676 | Hosebed divider with 45 degree offset to store customer required hose load. Locate on driver side of hosebed to store 400' of 2.5" DJ hose. | $862 |
| 3340-0677 | Stokes basket storage top of body [#LOC]. | $522 |
| 3340-0683 | Hosebed storage pan. Locate in forward area of hosebed. Pan depth shall be approximately 18". | $1,086 |
| 3340-0688 | The driver & officer side upper body to be flush painted smooth plate body panels. Includes rear facing to rear of extended high side body panels and side facing over L3 & R3 body panels. These areas are to be painted job color. | $913 |
| 3340-0689 | Insulation to protect compartment from exhaust system heat. Locate behind R1 wall. | $556 |
| 3340-0691 | Drop down fuel fill door and panel below on side of body to rear of driver and officer side tandem wheel well to be smooth plate painted job color. | $348 |
| 3340-0697 | Power vent system located in [#LOC]. Wired through receptacle in compartment. | $202 |
| 3340-0698 | Body compartment floors to be 3/16" aluminum smooth plate. | $698 |
| 3340-0711 | Hosebed divider with 45 degree offset to store customer required hose load. Rear section of divider approx. 82" to rear of offset and forward section of divider approx. 46" ahead of offset. HP75/78 only. | $756 |
| 3340-0713 | Diamond plate deflector shield for Light Tower. Deflector to be mounted on driver side compartment top at front of body. See photos on file. | $416 |
| 3340-0714 | Bolt-in floor [#LOC]. Floor is in addition to the existing DP floor. Floor to have 2" raised forward area (tapered towards rear for securing cribbing) and run full length front to rear. | $229 |
| 3340-0730 | Smooth plate corner guards for the driver and officer front and rear compartment faces. Guards to wrap around the corner and be full height of side assembly or to a max of 96". Corner guards to be painted black durabak. | $933 |
| 3340-0731 | Access panels thru B1 interior officer side and into rear of R4. Service access rear of fill station controls. Access panel to be sized as large as possible to accommodate sevice operations. | $478 |
| 3340-0735 | The [#LOC] compartment to have .187" smooth plate floor IPO diamond plate. | $184 |
| 3340-0740 | Divider shroud for cab tilt pump bolt in R1. | $190 |
| 3340-0747 | Compartment heater as high as possible on forward wall. Includes switch on driver overhead. Location: [#LOC]. | $1,244 |
| 3340-0751 | One (1) vertical air bag module to contain four (4) customer supplied air bags (2) 21" x 21" and (2) 22.5" x 16". Module to be .125" aluminum sheet with four (4) slots and installed in L2 offset forward. Half circle cut outs shall be provided on the outer edge to assist in grabbing the bags. Layout shall be (2) slots approximately 2" W x 12" H x 23" D (2) slots 2" W x 22" H x 22" D configuration. One (1) strap will be installed horizontally across the openings to keep items securely stowed. | $722 |
| 3340-0753 | Diamond plate storage enclosure on top of body. Enclose the driver side forward area of the catwalk to create a storage area with interior dimensions of approx. 60"L x 60"W x 15"D. Method of construction optional. Two (2) double pan diamond plate lift-up doors hinged to the outboard (left and right) of the box. The doors shall utilize D-ring handles with (2) point latching and be wired to the door ajar circuit. LED lighting shall be provided for each compartment. The lights shall illuminate when the compartment lid is in the open position. There shall be gas spring hold open device(s) on each door. The rear of the doors shall include pull down straps to assist closing the doors by pulling the straps from the opened position. Locate forward of driver side roof top compartments extending forward and to the right short of generator as mounted position. | $2,871 |
| 3340-0754 | Hosebed storage pan constructed of 3/16" (.187") aluminum smooth plate with black Scorpion coating (rough finish) IPOS diamond plate. Locate in forward area of hosebed. | $977 |
| 3340-0762 | False ceiling L1/R1. Mounted in place just below roll up guards ( upper door handle stop) and stop each side just inside the roll up door drums (open ends inboard of drums are acceptable) full length and width. | $464 |
| 3340-0763 | Storage box fully enclosed for Paratech TVS 200. (1) in L1/R1 transverse floor mounted centered on rear wall 12" tall x8" wide. Access available from L1 and or R1 includes a strap to secure the stabilizer in place within the storage box. Does not include Paratech Stabilizer TVS 200. | $315 |
| 3340-0767 | Dividers bolt in Qty (2) for transverse compartment. Location between L3/R3. One (1) divider to be located 26 inches deep from L3 and one 28 inches deep R3 door opening so as to generate a compartment located over chassis centerline. | $988 |
| 3340-0774 | Body wheelwell compartments (2) centered above tandem approx 24" W x 6" H x 26" D with drop down doors. Door material to match wheelwell finish. | $793 |

| Item No. | Description | |
|---|---|---|
| 3340-0778 | Wheel well liner extensions for inboard side of rear wheel well liners (PR). | $344 |
| 3340-0785 | There shall be no visible diamond plate on the body exterior. | $318 |
| 3340-0790 | Swing arm bracket with smooth plate box for TAL65 lightbar mounted on square extrusion. Swing arm to be mounted at rear of hosebed with pivot tower and (2) locking towers to be provided. | $737 |
| 3340-0793 | Hosebed divider for dry lay storage with 45 degree offset to store customer required hose load. Locate on driver side of hosebed to store 300' of 3" DJ hose. | $862 |
| 3340-0800 | Notched hosebed divider(s). Notch to be in center approximately 32" up from floor and angle up 45 degrees at each end. See photo on file. | $432 |
| 3340-0840 | Divider in left hand full body length storage area running side to side with adjustable track (Provides two storage areas one ahead and one behind divider). To be located in LH hosebed open storage area on driver side top of body. Locate adjustable divider tracks on sides of storage area 55" forward of the rear of the storage area with tracks to allow for adjustment a minimum of 15" forward and rearward from 55" location. For storage of a bound Hi-Rise hose pack to be stored rearward of the divider and the forward area to be open misc. equipment storage. | $245 |
| 3340-0841 | Sign plate smooth 30" x 30" mounted centered on body roof. Color: [#COL]. | $244 |
| 3340-0861 | Reinforce flooring of compartment LTC and RTC for storage of heavy equipment. | $516 |
| 3340-0862 | Stainless steel trim on bottom edge of compartment opening of [#LOC]. Includes full height of exterior extrusion. | $159 |
| 3340-0864 | Diamond plate single axle wheel well. Includes bolt-on composite wheel well liners and sanded aluminum trim fenderettes. | $942 |
| 3340-0868 | Fire Shopp recessed fuel fills for dual fuel fill applications. Includes brushed finish S/S doors with positive latch. | $603 |
| 3340-0869 | Divider long. To run full length of hosebed from front of hosebed to rear of hose chute on driver side of hosebed/chute. Divider shall also be set back and/or notched at forward area of hosebed for access to preconnect line connection. Can be mulitiple pieces due to overall length if needed. | $615 |
| 3340-0870 | Stainless steel trim on bottom edge and covering entire surface of extrusion below compartment opening of [#LOC]. | $192 |
| 3340-0874 | Reinforced hinged .188" embossed diamond plate lid for dunnage pan. Includes two (2) D-Ring latches stainless steel hinge along forward edge and gas shock hold open. Lid to be reinforced with welded on structure on underside to allow for lid to be a walking surface. | $701 |
| 3340-0880 | Brushed stainless steel scuff plates for all body handrails. | $488 |
| 3340-0893 | Hosebed divider with 45 degree offset to store customer required hose load. Locate on driver side of hosebed to store 250' of 3" DJ hose. | $862 |
| 3340-0894 | Smooth plate single axle wheel well painted job color. Includes bolt-on composite wheel well liners and bolt-on polished alum fenderettes. Wheel well plates to be flush mounted. | $3,164 |
| 3340-0895 | Smooth plate tandem axle wheel well painted job color. Includes bolt-on composite wheel well liners and bolt-on polished alum fenderettes. Wheel well plates to be flush mounted. | $5,152 |
| 3340-0897 | Air bag storage rack with four (4) horizontal slots that angle downward into the compartment to hold three (3) air bags (each 24"W x 24"L x 1"THK) and one (1) pelican case (24"W x 20"L x 9"THK). The rack fabricated from .125" smooth plate aluminum with a strap to hold contents in rack and finish to match body compartment interior. Note rack is designed with slot directed at an angle down to allow 24" x 24" air bag to fit in upper compartment`s 24" depth. Openings are: (3) 26" wide x 24.5" deep x 2" tall and (1) 26" wide x 21" deep x 10" tall. Located in L1 ceiling mounted offset against forward face of partition wall. | $1,293 |
| 3340-0901 | (3) Removable number plates with mounting brackets. Locate (1) each side of cab rearward of driver and officer doors (1) driver side rear compartment face above taillights. Plates to be 5.25" tall X 5" wide and painted job color. Lettering and/or graphics not included. | $846 |
| 3340-0909 | Divider Long Fixed. To run full length of hose bed (front to rear) positioned fixed as close to center of hosebed ROM roll up door drum center as hose loading permits.. | $605 |
| 3340-0918 | Wheel Chocks Alum HGS Heavy Includes Brackets. Locate below compartment ahead of Drivers side rear wheels. | $546 |
| 3340-0924 | Aluminum angle 2"x2" bolt on light guard to protect ROM light fixture and roll-up door track from damage for L4 rearward light only. (1) 18" piece at top and (1) 18" piece at the bottom bolted to the rear wall. | $117 |
| 3340-0929 | Smooth plate tandem axle wheel well painted job color. Includes bolt-on composite wheel well liners and fenderettes painted Durabak black. | $3,976 |

| Item No. | Description | |
|---|---|---|
| 3340-0930 | Hosebed storage area (no pan) in forward area of hosebed with embossed diamond plate cover hinged forward with two grab handles and gas shock hold opens. The cover to open past 90 degree for ease of equipment loading and removal in the storage area. | $770 |
| 3340-0938 | Provide access with covers on forward wall of compartment R3 to access to upper KLAMP-IT hardware for DOT storage bottles located in R2. | $189 |
| 3340-0950 | Rubrail for the body (serrated surface facing down). | $581 |
| 3340-0958 | Backboard storage sleeve for (2) boards individually stored one on top of the other. Each area to be 3"W x 17"H x 72"L. Includes (1) retaining strap on the driver side. Location: Vertically mounted in L1 and into R1 (no access this side) inboard of the vertical exhaust. | $707 |
| 3340-0963 | Hosebed storage pan smooth plate painted black Durabak. Locate in forward area of hosebed. | $963 |
| 3340-0975 | Smooth plate painted tandem axle wheel well. Includes bolt-on composite wheel well liners and bolt-on polished alum fenderettes. | $3,187 |
| 3340-0983 | All body and pump module compartments (if applicable) and/or storage areas (EXCEPT R1 compartment) to have no louvers or vents. Louvers or vents for compartment R1 are to located up high only. | $277 |
| 3340-0985 | Attic Ladder / Pike Pole cover to be located in compartment R1. Includes compartment wall cut-outs. | $180 |
| 3340-0993 | LINE-X package for hosebed storage pan(s): Includes all surfaces of the pan visible from top of the truck. Also includes all platework fabricated at E-ONE mounted inside the pan such as hydraulic system cover generator shield reservoir cover cooler cover cord reel cover boxes dividers trays etc as applicable. | $735 |
| 3340-0994 | LINE-X package for Pumper or Tanker body (excluding eMAX) see specification for more details. | $2,253 |
| 3340-0995 | LINE-X package for under body platform(s): Includes all exterior surfaces of the pump panel operator and/or under body platform(s) as applicable. Quantity each. | $131 |
| 3340-0996 | LINE-X package for eMAX Pumper see specification for details. | $3,749 |
| 3340-0997 | Horizontal fixedl shelf. Shelf to seperate upper hose from lower hose. | $562 |
| 3340-1000 | Cast Products FG4102-1-250-N (hinge right) recessed fuel fill with door. Recessed fuel fill driver side wheel well. | $135 |
| 3340-1004 | Stokes storage compartment. Compartment shall include a top load hinged access door with D-ring latches and moon spring door hold open device. Compartment shall be 9 in. wide X full width of body and full height of upper body. Locate: eMAX module pan toward aft bulkhead with vertical access to rear body catwalk area. | $1,483 |
| 3340-1017 | LINE-X package for Tandem Axle Aerial see specification for details. | $8,341 |
| 3340-1018 | LINE-X package for body fenderettes. | $229 |
| 3340-1019 | LINE-X package for Aerial body miscellaneous parts: Includes wheel well plates outrigger covers diamond plate filler panels diamond plate fuel fill doors and aerial control doors as applicable. | $1,031 |
| 3340-1023 | Cab Body Multiplex Color Display and Pump Module safety and warning Tags in Spanish to be in addition to standard English E-One supplied Tags. | $2,639 |
| 3340-1025 | Storage sleeve compartment in transverse. Location: L1/R1 offset to the rear of the compartment. There shall be three separate storage areas. The bottom sleeve shall be approximately 34" wide x 12" high x 86" long. Two vertical sleeves shall be on top of this base section. The first shall be 16" wide x 24" high x 86" long and offset to the rear. The second shall be 18" wide x 24" high x 86" long and shall be offset forward. Includes (3) sets of retaining straps on both sides (1) for each sleeve. | $1,433 |
| 3340-1035 | All compartment louvers to be up as high as possible. | $289 |
| 3340-1036 | Body compartment floors to be 3/16" aluminum smooth plate. | $1,211 |
| 3340-1039 | Diamond plate tandem axle wheel well. Includes bolt-on composite wheel well liners and bolt-on rubber trim fenderettes. | $1,973 |
| 3340-1040 | Body compartment Interiors and compartment mounted components (shelves trays toolboardsetc.) to have gray Scorpion polyurethane coating. To include pan of hinged doors and tool compartments (as applicable). Does not include floors if they are dia plt. | $13,452 |
| 3340-1041 | Solid aluminum 1" x 2" bar stock rubrail with 45 degree mitered ends. No scotchlite striping to be included. | $948 |
| 3340-1047 | Hosebed divider with 45 degree offset to store customer required hose load. Locate on officer side of hosebed to store 400' of 2.5" DJ hose. | $862 |
| 3340-1054 | Sign plate smooth plate with sanded finish 30" x 30" mounted on forward body roof. | $244 |
| 3340-1055 | A tag stating "Top off DEF tank when fueling main tank" shall be permanently affixed to the vehicle near the fuel fill(s). | $69 |

| Item No. | Description | |
|---|---|---|
| 3340-1064 | LINE-X Package: Body compartment Interiors and compartment mounted components (shelves trays toolboardsetc.) to have LINE-X finish. To include pan of hinged doors and tool compartments (as applicable). Includes diamond plate floors and E-ONE style wheel well SCBA compartments if applicable. Package does not include roof top compartment interior. | $17,384 |
| 3340-1065 | LINE-X package for Pumper or Tanker body stepping surfaces see specification for more details. | $752 |
| 3340-1066 | The storage box(es) shall have LINE-X finish both inside and outside. | $612 |
| 3340-1067 | LINE-X Package: Body compartment Interiors shall have LINE-X finish. Package does not include roof top compartment interior. | $8,195 |
| 3340-1068 | Smooth plate tandem axle wheel well painted job color. Includes bolt-on composite wheel well liners and bolt-on alum fenderettes painted Durabak black. Wheel well plates to be flush mounted. | $5,749 |
| 3340-1070 | LINE-X package for Rescue catwalk area on top of the body. Includes floor surfaces of catwalk and forward pan area. | $1,874 |
| 3340-1081 | Two (2) short dividers to run from foward hosebed wall front of fill tower to create a storage area. Wetside Tanker Only. | $772 |
| 3340-1088 | Officer side running board modified to extend out 2" beyond body side with 45 degree angled forward and rearward corners | $220 |
| 3340-1089 | Hosebed divider fixed to store customer required hose load. Locate divider inline with back wall of R3 shallow compartment extending rearward to hosebed opening to store 750' of 5" LDH hose. | $513 |
| 3340-1090 | Diamond plate single axle wheel well. Includes bolt-on aluminum wheel well liners sanded finish and bolt-on polished aluminum fenderettes. | $1,563 |
| 3340-1091 | Durabak package for Tandem Axle Aerial see specification for details. | $8,341 |
| 3340-1102 | Durabak package for hosebed storage pan(s): Includes all surfaces of the pan visible from top of the truck. Also includes all platework fabricated at E-ONE mounted inside the pan such as hydraulic system cover generator shield reservoir cover cooler cover cord reel cover boxes dividers trays etc as applicable. | $735 |
| 3340-1103 | Durabak package for Pumper or Tanker body (excluding eMAX) see specification for more details. | $2,253 |
| 3340-1104 | Durabak package for body fenderettes. | $229 |
| 3340-1105 | Durabak package for body interior door panels. Location(s): [#LOC]. | $229 |
| 3340-1112 | Deflector for hosebed. To run fron center of "V" to the left side of hosbed so all hose deploys through right side chute. | $321 |
| 3340-1113 | Bracing installed for Dealer supplied and installed wheel chock brackets (PR). Location below L2 & R2 offset rearward. Note requires jack pad bracket offset forward as far as possible (if applicable). | $454 |
| 3340-1114 | Body compartment door pans to have a swirled finish. Includes pan or hinged door as applicable. | $546 |
| 3340-1119 | Rivet in place stainless steel trim on bottom edge of compartment opening. Option quantity is each. Option does not include stainless steel trim. | $52 |
| 3340-1120 | Stokes basket mounting brackets top of body officer side over R3/R4 for storage of a CMC Rescue-Stainless Steel Rescue Litter Model #726101 Stokes basket. | $522 |
| 3340-1123 | Underbody full width mudflap mounted to body. Includes white reflective "STAY BACK 300 FEET" lettering. Locate at rear of body ahead of staircase. Bottom of flap to be approx 12" off ground. | $784 |
| 3340-1125 | All body walkway and speedlay compartments (if applicable) and/or storage areas (EXCEPT R3 compartment) to have no louvers or vents. Louvers for compartment R3 are to located only on the rear and back walls. | $277 |
| 3340-1126 | Spool plastic roll storage 1 inch diameter round bar stock for a 36 inch long roll of plastic located in R4 upper. See Photos on file. | $427 |
| 3340-1134 | LINE-X package for Wetside body: All visible diamond plate surfaces shall be coated with LINE-X finish. See specification for more details. | $2,253 |
| 3340-1150 | Rear Aerial staircase steps beavertail platework and tailboard shall be coated with black Line-X. | $830 |
| 3340-1151 | Smooth plate corner guards for the driver and officer front compartment face. Guards to wrap around the corner and be full height of side assembly. Corner guards to be painted job color. | $617 |
| 3340-1163 | Compartment heater. Includes switch on driver overhead. Location: [#LOC]. | $1,244 |
| 3340-1174 | Horizontal air bag module for (7) seven customer furnished Paratech air bags. Floor mounted in L3 compartment offset against rearward wall. See sketch in file and for specifications see detailed specs. | $759 |
| 3340-1180 | Notch the ceiling of the [#LOC] compartment and add a cap to raise the ceiling height. | $286 |

| Item No. | Description | |
|---|---|---|
| 3340-1186 | LINE-X package for under body platform(s): Includes all exterior surfaces of the pump panel operator and/or under body platform(s) as applicable. Quantity each. | $238 |
| 3340-1189 | Nylatron bolt-on overlay for compartment floor (full width/full depth). Includes 45 degree beveled edge to outside and .187" smooth plate aluminum beneath Nylatron floor with fasteners countersunk. Location: [#LOC]. | $551 |
| 3340-1214 | Aluminum diamond plate trim on bottom and side edges of speedlay openings. | $393 |
| 3340-1225 | Diamond plate single axle wheel well. Includes bolt-on composite wheel well liners and bolt-on rubber trim fenderettes. | $1,021 |
| 3340-1240 | Aluminum diamond plate overlays on both sides of the pump module to extend from the top of the pump panel or as applicable to surround openings down to running boards. Overlay shall surround the openings for the speed lay(s) and or tool compartments in the forward area of the pump module and shall be positioned to protect the module surface during tool or hose deployment. | $710 |
| 3340-1253 | LINE-X Package: Specified Body compartment interior and compartment mounted components (shelves trays toolboardsetc.) to have LINE-X finish. To include pan of hinged doors if applicable. Compartment interior includes floor back and side walls and ceiling as applicable. Location(s): [#LOC]. | $2,484 |
| 3340-1259 | The spacer plates between the cab and body shall be coated with LINE-X. | $238 |
| 3340-1271 | Cover heater. Cover to be aluminum. Finish to match compartment interior. Location: [#LOC]. | $95 |
| 3340-1274 | Stop bracket. A 1 inch aluminum angle to be located along body compartment floor edge close to door opening. Locate: L1. | $75 |
| 3340-1284 | Swirl plate corner guards for the driver and officer front compartment face. Guards to wrap around the corner and be full height of side assembly or to a max of 96". | $437 |
| 3350-0000 | Hydraulic hose reel for use with Hurst brand tools. Includes 100' 1/4" Parker Polyflex hose (up to 5000 PSI) and rollers (captive type). Location: [#LOC]. Hose Color: [#COL]. | $2,523 |
| 3350-0001 | Air Reel w/electric rewind. 12V with 100' 1/4 in. hose plumbed to the truck air system (unless otherwise specified). Location: [#LOC]. | $2,773 |
| 3350-0004 | Reel Air. Low Pressure Utility Air Hose Reel assembly (Includes Rollers) with 250' 3/8 in. low pressure air hose. Includes mini panel located in compartment below reel. Located in [#LOC]. | $2,661 |
| 3350-0009 | Hydraulic hose reel for use with TNT brand tools. Includes 100' 1/4" Parker Polyflex hose (up to 10500 PSI) and rollers (captive type). Location: [#LOC]. Hose Color [#COL]. | $5,068 |
| 3350-0010 | Hydraulic hose reel for use with Phoenix brand tools. Includes 100' 1/4" Parker Polyflex hose (up to 5000 PSI) and rollers (captive type). Location: [#LOC]. Hose Color [#COL]. | $2,523 |
| 3350-0011 | Hydraulic hose reel for use with Code 3 brand tools. Includes 100' 1/4" Parker Polyflex hose (up to 5000 PSI) and rollers (captive type). Location: [#LOC]. Hose Color [#COL]. | $2,523 |
| 3350-0012 | Hydraulic hose reel for use with Amkus brand tools. Includes 100' 1/4" Parker Polyflex hose (up to 10500 PSI) and rollers (captive type). Location: [#LOC]. Hose Color: [#COL]. | $5,068 |
| 3350-0013 | Hydraulic hose reel for use with Hurst Centaur brand tools. Includes 100' 1/4" Parker Polyflex hose (up to 10000 PSI) and rollers (captive type). Location: [#LOC]. Hose Color [#COL]. | $5,068 |
| 3350-0014 | Hydraulic hose reel for use with Genesis brand tools. Includes 100' 1/4" Parker Polyflex hose (up to 10000 PSI) and rollers (captive type). Location: [#LOC]. Hose Color [#COL]. | $5,068 |
| 3350-0015 | Hydraulic hose reel for use with Holmatro brand tools. Includes 100' 1/4" Parker Polyflex hose (up to 10000 PSI) and rollers (captive type). Location: [#LOC]. Hose Color [#COL]. | $5,068 |
| 3350-0016 | 12' Lead/Supply Line for high pressure hydraulic reel. To be used with 10000 PSI hyd reels. Locate on reel in [#LOC]. | $863 |
| 3350-0017 | 30' Lead/Supply Line for high pressure hydraulic reel. To be used with 10500 PSI hyd reels. Locate [#LOC]. | $1,283 |
| 3350-0018 | 12' Lead/Supply Line for low pressure hydraulic reel. To be used with 5000 PSI hyd reels. Locate [#LOC]. | $691 |
| 3350-0019 | 30' Lead/Supply Line for low pressure hydraulic reel. To be used with 5000 PSI hyd reels. Locate [#LOC]. | $1,086 |
| 3350-0025 | Hydraulic hose reel for use with TNT brand tools. Includes 100' 1/4" synthetic rubber hose (up to 10500 PSI) and rollers (captive type). Location: [#LOC]. Hose Color [#COL]. | $5,068 |
| 3350-0026 | Hydraulic hose reel for use with Amkus brand tools. Includes 100' 1/4" rubber hose (up to 10500 PSI) and rollers (captive type). Location: [#LOC]. Hose Color: [#COL]. | $5,068 |
| 3350-0029 | Route hydraulic lead line(s) to [#LOC]. | $103 |
| 3350-0030 | Low pressure utility air hose reel w/spring rewind. Includes 50' 3/8" low pressure air hose rollers ball stop and and shut-off valve accessible from ground. Loc: [#LOC]. | $1,397 |
| 3350-0032 | Akron utility air hose reel. Includes 200' 3/8" hose and reel mounted rollers (captive type). Loc: [#LOC]. | $1,483 |

| Item No. | Description | |
|---|---|---|
| 3350-0033 | Akron hydraulic hose reel for use with Hurst brand tools. Includes 100' 1/4" Parker Polyflex hose (up to 5000 PSI) and rollers (captive type). Location: [#LOC]. Hose Color: [#COL]. | $2,345 |
| 3350-0036 | Hydraulic hose reel for use with Hurst Centaur brand tools. Includes 150' 1/4" Parker Polyflex hose (up to 10000 PSI) and rollers (captive type). Location [#LOC]. Hose Color [#COL]. | $6,170 |
| 3350-0040 | 12' Lead/Supply Line for high pressure hydraulic reel. To be used with 10500 PSI hyd reels. Locate on reel in [#LOC]. | $906 |
| 3350-0041 | 30' Lead/Supply Line for high pressure hydraulic reel. To be used with 10500 PSI hyd reels. Locate [#LOC]. | $1,346 |
| 3350-0043 | Akron hydraulic hose reel for use with Amkus brand tools. Includes 100' 1/4" Parker Polyflex hose (up to 10500 PSI) and rollers (captive type). Location: [#LOC]. Hose Color: [#COL]. | $3,617 |
| 3350-0045 | Akron reel to be powder painted custom color. Requires approval from vendor on color. Location: [#LOC]. Reel Color: [#COL]. | $128 |
| 3350-0046 | 8' Lead/Supply Line for high pressure hydraulic reel. To be used with hyrdraulic reels between 10000 to 10500 PSI. Locate: [#LOC]. | $420 |
| 3350-0048 | Low Pressure Utility Air Hose Reel assembly with 250' 3/8 in. low pressure air hose. Locate in [#LOC]. | $1,999 |
| 3350-0052 | 6' Lead/Supply Line for high pressure hydraulic reel. To be used with 10000 PSI hyd reels. Locate on reel in [#LOC]. | $830 |
| 3350-0062 | Hydraulic hose reel for use with Hurst brand tools. Includes rollers (captive type). Does not include hydraulic hose. Location: [#LOC]. | $1,936 |
| 3350-0064 | Air reel w/electric rewind 100' of .375" hose plumbed to the cascade system for low pressure utility air. Includes 100' 3/8" low pressure air hose rollers and ball stop (controls for reel included with breathing air system). Location: L3 suspended below fixed shelf offset rearward next to breathing air fill station. | $1,999 |
| 3350-0066 | 16' Lead/Supply Line for low pressure hydraulic reel. To be used with 5000 PSI hyd reels. Locate [#LOC]. | $733 |
| 3350-0068 | A lead line #8 5000 psi hydraulic hose line routed from IHT manifold to B2 lower rear wall. | $493 |
| 3350-0069 | Hydraulic tool ports with TNT RV-120 remote actuation vlv. Quick connect fittings on vlv to be for Phoenix brand tools. vlv with tool fittings to be located on officer side of front bumper. Includes hyd supply lines run to B1. | $1,942 |
| 3350-0072 | A lead line 5000 psi hydraulic line routed from B2 lower forward wall to dunnage pan located MAS heat exchanger | $706 |
| 3350-0073 | A return lead line 5000 psi hydraulic line routed from B2 lower forward wall to dunnage pan located generator | $706 |
| 3350-0075 | Remote actuation vlv for hyd tool reels. Includes TNT RV-ATT vlv and hyd supply lines run to front bumper. Vlv to be located low on back wall of center frt bumper tray with inlet lines running through back wall. Lines between RV-ATT vlv and reel to have quick connect fittings. | $3,669 |
| 3350-0077 | Hydraulic hose reel for use with Amkus brand tools. Includes 150' 1/4" Parker Polyflex hose (up to 10500 PSI) and rollers (captive type). Location: [#LOC]. Hose Color: [#COL]. | $5,321 |
| 3350-0078 | Hydraulic reels to be mounted in aluminum tray with a cutout for roller assembly. A 1" lip around roller tray assembly to contain any fluids that may leak from hyd reel. Location [#LOC]. | $410 |
| 3350-0083 | Hydraulic hose reel for use with Amkus brand tools. Includes rollers (captive type). Does not include hydraulic hose. Location: [#LOC]. | $2,241 |
| 3350-0084 | 16' Lead/Supply Line for high pressure hydraulic reel. To be used with 10500 PSI hyd reels lines are red and black in color. Compatible with Amkus tool brand. Locate on reel in [#LOC]. | $1,062 |
| 3350-0085 | 16' Lead/Supply Line for high pressure hydraulic reel. To be used with 10500 PSI hyd reels lines are yellow and black in color. Compatible with Amkus tool brand. Locate on reel in [#LOC]. | $1,062 |
| 3350-0088 | 40' Lead/Supply Line for high pressure hydraulic reel. To be used with 10500 PSI hyd reels. Locate: [#LOC]. | $1,710 |
| 3350-0089 | CMW model 6011-W3-H1 dual reel low pressure working air and hydraulic hose reel combo. Includes 100' of 300 PSI blue air hose and 100' of 10500 PSI red/black hydraulic hose compatible with Amkus tools. Located on ceiling of compartment B1 offset to officer side. | $6,721 |
| 3350-0090 | CMW model 6011 dual hydraulic hose reel for use with 10500 PSI Amkus tools. Reel SHALL NOT be supplied with hose or ball stops. Located on ceiling of compartment B1 offset to driver side. | $4,713 |
| 3350-0091 | 15' Lead/Supply Line for high pressure hydraulic reel. To be used with 10500 PSI hyd reels. Locate on reel in [#LOC]. | $992 |
| 3350-0092 | Hydraulic hose reel for use with Holmatro brand tools. Includes 60' of Core Technology hose installed (up to 10000 PSI) and rollers (captive type). Location: [#LOC]. Hose Color: [#COL]. | $4,820 |

| Item No. | Description | |
|---|---|---|
| 3350-0098 | 45' Lead/Supply Line for low pressure hydraulic reel. To be used with 5000 PSI hyd reels. Locate [#LOC]. | $1,507 |
| 3350-0100 | 31' to 40' Core Technology Lead/Supply Line for high pressure hydraulic reel. To be used with 10000 PSI hyd reels. Locate on reel in [#LOC]. | $1,776 |
| 3350-0101 | Up to 10' Core Technology Lead/Supply Line for high pressure hydraulic reel. To be used with 10000 PSI hyd reels. Locate on reel in [#LOC]. | $1,206 |
| 3350-0102 | Hydraulic reel rewind switch. Switch located [#LOC]. | $120 |
| 3350-0104 | 8' Lead/Supply Line for high pressure hydraulic reel. To be used with 10500 PSI hyd reels. Locate on reel in [#LOC]. | $817 |
| 3350-0108 | CMW model 6011 dual hydraulic hose reels for use with 5000 PSI tools shall be provided and installed. Includes two (2) sets of 100' 1/4" twinline hose (up to 5000 PSI) hose guides and ball stops. Includes (2) 30' lead/supply lines. Location: [#LOC]. Hose Color: [#COL]. | $12,284 |
| 3350-0111 | Bulk Head Fittings including (2) 3' Pig Tails. Locate R3 back wall offset forward and 10" off compartment floor. | $841 |
| 3350-0119 | Akron utility air hose reel. Capacity for 200' 3/8" hose (hose not included) and reel mounted rollers (captive type). Loc: L3 forward. | $1,229 |
| 3350-0120 | Remote dual actuation vlv for (2) hyd tool reels. Includes Genesis remote dual valve. Does not include lead lines. | $4,345 |
| 3350-0121 | 30' Lead/Supply Line for high pressure hydraulic reel. To be used with 10000 PSI hyd reels. Locate [#LOC]. | $1,283 |
| 3350-0122 | Mounting to be provided for twin line hydraulic hose reel. Includes mounting only. Location: [#LOC]. | $494 |
| 3350-0123 | Bulk Head Fittings including (2) 5' Pig Tails. Locate R3 back wall offset forward and 10" off compartment floor. | $1,039 |
| 3350-0127 | Hydraulic hose reel for use with Genesis brand tools. Includes Genesis 100' 1/4" twinline hose with One Step coupler and rollers (captive type). Location: [#LOC]. Hose Color [#COL]. | $6,813 |
| 3350-0129 | Bulk Head Fittings including (2) 5' Pig Tails. Locate R3 back wall offset rearward and 10" off compartment floor. | $1,039 |
| 3350-0131 | CMW model 6011 dual hydraulic hose reel for use with 10500 PSI Genesis tools. Reel SHALL NOT be supplied with hose or ball stops. Located [#LOC]. | $4,713 |
| 3350-0134 | Hydraulic hose reel Hannay model EF2516-17-18 for use with TNT brand tools. Includes rollers (captive type). Does not include hydraulic hose. Location: [#LOC]. | $2,465 |
| 3350-0135 | Remote actuation hydraulic valve for hydraulic tool utility (reel outlet etc). Includes TNT RV-120 valve and hydraulic supply lines run from dealer supplied tool pump/power unit to RV120 valve and from RV-120 valve to hydraulic utility (reel outlet etc). Lines between RV-120 valve and reel to have quick connect fittings. RV-120 valve location: Front Bumper. | $1,942 |
| 3350-0136 | The lead lines connecting the hydraulic tool outlet valve to the power unit shall have #6 FJIC connections on the power unit side and #6 MNPT connections on the valve side. | $49 |
| 3350-0137 | Air reel w/electric rewind 100' of .375" hose plumbed to the cascade system for low pressure utility air. Includes 100' 3/8" low pressure air hose rollers and ball stop (controls for reel included with breathing air system). Location: [#LOC]. | $1,999 |
| 3350-0138 | Upgrade hydraulic hose on a reel to Hurst brand yellow/grey with Streamline fitting (EA). | $2,686 |
| 3350-0140 | CMW model 6011 dual reel electric cord and hydraulic hose reel combo. Includes 100' of 10/4 yellow cord and 100' of 5000 PSI [#COL] (vendor supplied) hydraulic hose compatible with Hurst tools. Location: [#LOC]. | $8,102 |
| 3350-0142 | CMW model 6011 dual reel electric cord and hydraulic hose reel combo. Includes 100' of 10/3 black cord and 100' of 10500 PSI [#COL] (vendor supplied) hydraulic hose compatible with TNT tools. Location: [#LOC]. | $8,102 |
| 3350-0144 | CMW model 6022 dual hydraulic hose reel for use with 10500 PSI Amkus tools shall be provided and installed. Includes two (2) sets of 200' 1/4" twinline hose (up to 10500 PSI) hose guides and ball stops. Location: [#LOC]. Hose Color: [#COL]. | $10,805 |
| 3350-0145 | CMW model 6011 dual hydraulic hose reel for use with 10500 PSI Amkus tools shall be provided and installed. Includes two (2) sets of 100' 1/4" twinline hose (up to 10500 PSI) hose guides and ball stops. Location: [#LOC]. Hose Color: [#COL]. | $9,838 |
| 3350-0146 | CMW model 6011 dual hydraulic hose reel for use with 10500 PSI tools. Reel SHALL NOT be supplied with hose or ball stops. Location: [#LOC] | $4,713 |
| 3365-0011 | Floor mounted roll-out tray. Includes 250lbs. tray capacity. Mount on [#LOC] floor. | $683 |
| 3365-0013 | Center mounted ladder tunnel. Ladder rack to hold: [#LOC]. | $5,352 |
| 3365-0014 | Dual ladder tunnel for HP75 / HP78 SideStacker. Ladder rack to hold: [#LOC]. | $5,352 |
| 3365-0015 | Dual ladder tunnel for HP75 / HP78. Ladder rack to hold: [#LOC] | $5,352 |

| Item No. | Description | |
|---|---|---|
| 3365-0016 | Box type enclosure for forward end of ladder tunnel. Required on center HB HP75 / HP78 with ladder tunnel doors. | $455 |
| 3365-0025 | Attic ladder mounting brackets (PR). Locate [#LOC]. | $323 |
| 3365-0036 | Center mounted ladder tunnel. Ladder rack to hold: [#LOC] | $5,352 |
| 3365-0037 | Center mounted ladder tunnel. Ladder rack to hold: [#LOC]. | $5,352 |
| 3365-0038 | Center mounted ladder tunnel. Ladder rack to hold: [#LOC] | $5,352 |
| 3365-0039 | Center mounted ladder tunnel. Ladder rack to hold: [#LOC] | $5,352 |
| 3365-0074 | SCBA/Fire Extinguisher storage rack. Locate in [#LOC]. To hold (6) bottles- (3) wide/(2)high. Bottles to be stored angled upward in the compartment. The bottom and sides are to include ribbed rubber inserts. | $525 |
| 3365-0076 | Center mounted ladder tunnel. Ladder rack to hold: [#LOC]. | $5,352 |
| 3365-0084 | Vertical ladder brackets (3) with adjustable tracks. Locate on officer's side of body to hold PEL-28 PRL-14 and CJL-14 ladders. | $1,044 |
| 3365-0117 | Storage rack (4) 8" x 64" aluminum tubes. Locate ceiling mtd in L1/R1 transverse compartment centered side to side offset to front. | $1,156 |
| 3365-0119 | Horizontal ladder brackets right side of body in recessed storage area above half side compartments. Brackets to hold from top to bottom: [#LOC]. | $2,194 |
| 3365-0127 | Storage box in ladder tunnel for tripod 10 wide x 10 high x 106 long. | $1,039 |
| 3365-0131 | Stokes basket storage rack approx 9"H x 25"W x 86"L with open ends. Includes nylon strap on each end to retain stokes. Also includes (6) pile pole tubes equally spaced below stokes rack. Position retaining slots so they alternate facing the left and right sides (first pole left second pole right. etc). Locate ceiling mtd in L2/R2 transverse. | $1,068 |
| 3365-0132 | Fire extinguisher storage rack to hold (3) extinguishers in a single horz row. Bottom and sides to include ribbed rubber inserts. Each opening to have a vertically mounted strap. Locate floor mtd in [#LOC]. | $688 |
| 3365-0144 | Horizontal ladder brackets left side of body in recessed storage area above half side compartments. Brackets to hold from top to bottom: [#LOC]. | $2,194 |
| 3365-0145 | Nylon scuff pads for vert uprights of rear ladder rack. Approx 1/16 thick self-stick material located on each side of extension ladders. | $115 |
| 3365-0146 | Pike pole storage tube aluminum 16' with capped end. Locate in ladder tunnel. | $228 |
| 3365-0147 | Backboard and Little Giant storage rack. Backboard sleeve approx 4"H x 20"W x 70"L with open ends located in trans compt over pump ceiling mtd offset to frt. Little Giant sleeve for a Model 17 approx 7"H x 25.5" W x 56" L open on left side only and located below backboard sleeve. | $1,158 |
| 3365-0167 | Dual ladder tunnel for HP75 / HP78 SideStacker with tall R1 compartment. Ladder rack to hold: [#LOC]. | $5,352 |
| 3365-0215 | Double Hard Suction Storage Rack to store 6"x 6' hard suction hoses. (1) set Driver side compartment top offset forward and (1) set matching on Officer side atop diamond plate hosebed cover. Includes spring hold downs with scuff plates (as applicable). | $684 |
| 3365-0248 | (2) Pike pole storage tubes to store (2) Fire Hooks Unlimited 16' Boston Rake Hooks. Locate in ladder tunnel recessed forward to allow ladder tunnel door to close. | $455 |
| 3365-0282 | Hard suction storage box. Located in the officer side hose bed. Includes drop down door with finish to match rear of body latch(s) shall be provided to secure the door in the closed position ( (wired to door ajar) hose bed style top nylatron flooring and hosebed divider extending to top of hose bed for inboard side. Box to hold (1)6" x 10' hard suction hose w/rocker lugs. Approximate size of opening 9.5"w x 8"h. | $1,323 |
| 3365-0296 | Rubber flaps to enclose ladder tunnel between body sections at boom support (sides top and bottom). HP95 Mid-mount only. | $469 |
| 3365-0321 | Horizontal ladder bracket Includes .187" smooth aluminum boot painted black durabak with ladder hold down. Location and type of ladder: [#LOC]. | $321 |
| 3365-0334 | Ladder Storage Box. Located in the officer side hosebed. The top shall be enclosed using the hosebed cover the rear access shall be included in the vinyl rear flap as part of the hose bed cover (hinged door not included) The hosebed cover and rear flap shall be sold separately. Box to hold (1) Alcolite PEL 24' 3-section (1) Alcolite PRL 12' roof (1) Alcolite FL 10' attic ladder (2) backboards and (2) pike poles. | $2,834 |
| 3365-0335 | Miscellaneous storage in hosebed above the ladder tunnel. Upper area open and main hosebed cover to be used to cover top area of the storage area. There is to be a bolted end plate at the rear of the storage area horizontal adjustable tracks 60" from the rear mounted forward with a divider. | $375 |

| Item No. | Description | |
|---|---|---|
| 3365-0351 | Box type enclosure shall be provided for Little Giant "Classic" Model 17 ladder. Box shall be mounted rearward on bi-directional tray. The box shall be approximately 58" long X 28" high X 8.63" wide. The box ends (left and right) shall be left open Straps shall be provided on each end to secure the ladder in place. WOP aerial body only. | $754 |
| 3365-0355 | Hard suction Storage Box located in the drivers side roof top compartment. The storage to be boxed off inside roof top compartment. Includes vertical hinged smooth plate door (wired to door ajar) w/push-button latch. Storage to hold [#LOC] 6" x 10' hard suction hoses. | $2,112 |
| 3365-0356 | Ladder storage thru tank for (1) 2-section 24' extension (1) 14' roof (1) 10' attic with feet and (2) pike poles. Provide retaining straps to hold contents stationary. Reduces selected water tank capacity by approximately 250 gallons for pumpers and 300 gallons for tankers. | $2,996 |
| 3365-0377 | Fire extinguisher storage rack to hold (3) extinguishers in a single horz row. The rack shall be raised 3" on the open end to allow the extinguishers to slide back into the box at an angle. Bottom and sides to include ribbed rubber inserts. Each opening to have a vertically mounted strap. The rearward opening shall be 15" wide the middle and forward opening to be 10" wide. The opening shall be 18" high. The top shall be flat and have a 2" lip up for storing items as a permanent shelf. Locate floor mtd in [#LOC]. | $688 |
| 3365-0378 | Ladder Storage Box. Located in the officer side hosebed. The top shall be enclosed using hosebed style top. Includes drop down door (wired to door ajar) W/ D-ring latch. Box to hold (1) Alcolite FEL 24' 2-section (1) Alcolite FRL 14' roof (1) Alcolite FL 10' attic ladder and (5) 10' pike poles (NY hooks). | $2,834 |
| 3365-0379 | Fire extinguisher storage rack to hold (3) extinguishers in a single horz row. Bottom and sides to include ribbed rubber inserts. Each opening to have a vertically mounted strap. The top shall have a 1" lip up for storing items.Locate floor mtd in [#LOC]. | $688 |
| 3365-0410 | Ladder Storage Box. Located in the officer side hosebed. The top shall be enclosed using the hosebed cover the rear access shall be equipped with an outboard vertical hinged door with thumb latch and moon spring hold open The hosebed cover and rear flap shall be sold separately. Box to hold (1) Alcolite PEL 24' 3-section (1) Alcolite PRL 12' roof with separete divider and (1) Model 13 Little Giant | $2,834 |
| 3365-0415 | Little Giant sleeve for a Classic Model 17 approx 9.25" W x 25.5" H x 56" L for vertical storage in transverse compartment. Includes door to secure the ladder in place with composite flooring. Located just above upper transverse floor centered on forward wall to be accessible from L1/R1. | $512 |
| 3365-0422 | Ladder storage through tank for (1) 2-section 24' extension (1) 14' roof (1) 10' attic with feet(2) pike poles and (2) backboards. Reduces selected water tank capacity by approximately 350 gallons. | $3,392 |
| 3365-0429 | Hard suction Storage Box located in the driver side roof top compartment. The storage to be boxed off inside roof top compartment. Includes vertical hinged smooth plate door (wired to door ajar) w/push-button latch. Storage to hold (2) 6" X 12' hard suction tubes. | $2,112 |
| 3365-0434 | Ladder Storage Box. Located in the officer side hosebed. The top shall be enclosed using the hosebed cover the rear access shall be equipped with an INBOARD vertical hinged door with thumb latch and moon spring hold open The hosebed cover and rear flap shall be Sold Separately. Rear Flap does not cover rear ladder box door. Box to hold (1) Alcolite PEL 24' 3-section (1) Alcolite PRL 12' roof with separete divider (1) Model 13 Little Giant (1) 6` Firehook model MPH-6 pike pole w/gas shut-off end and (1) 8` Firehook model MPH-8 pike pole w/gas shut-off end. | $3,167 |
| 3365-0443 | Hard suction storage rack for (1) 6" X 8' suction hose. Locate [#LOC]. Includes NFPA retaining strap(s). | $294 |
| 3365-0480 | Hard suction storage in hosebed for the following: (2) 6" x 10' hard suction hoses. Includes (1) hosebed divider with squared off upper rear vertically hinged (to swing outboard hosebed area) door with latch (wired to door ajar indicator) and composite material overlay on hosebed flooring. Upper area open and main hosebed cover to be used to cover top area of storage area. Storage located to officer side of hosebed. | $1,150 |
| 3365-0509 | Double hard suction storage rack (side by side) for 6" x 6' hard suction hoses. Driver side compartment top. Includes spring hold downs with scuff plates (as applicable). | $633 |
| 3365-0514 | Fire extinguisher storage rack to hold (3) extinguishers in a single horz row. Each storage area to be 11" wide x 11" high x 25" deep with a trough in the bottom (same as used in E-ONE wheelwell bottle storage. Bottom and sides of the trough to include ribbed rubber inserts. Each opening to have a vertically mounted strap. Bolt to the bottom of the adjustable shelf in R1 forward end. | $688 |

| Item No. | Description | |
|---|---|---|
| 3365-0534 | Ladder assist roller system shall be provided for the Duo-Safety 45' 1525-A "Bangor" style ladder in the ladder tunnel. Includes sealed bearing rollers at the opening of the ladder tunnel. Purpose is to relieve a significant portion of the weight of the ladder at the opening to reduce the pulling force required to remove the ladder from the storage compartment. | $597 |
| 3365-0542 | Center mounted ladder tunnel. Ladder rack to hold: PEL3-35 PEL-20 PRL-14 PRL-12 and FL-10. | $5,352 |
| 3365-0574 | Center mounted ladder tunnel. Ladder rack to hold: (1)PEL-24 24' 2-sect. extension ladder | $1,841 |
| 3365-0608 | Bolt-in storage sleeve. Located in center of ladder rack to be approximately 5" wide x 19" high by as deep as waterway riser pipe will allow. Note sleeve to remain open at rear. | $692 |
| 3365-0614 | Horizontal ladder bracket. Location and type of ladder: over R1 for Little Giant model 17. Mounted similar to previous unit see photo in electronic file. | $269 |
| 3365-0651 | Fire extinguisher storage rack to hold (2) extinguishers in a single horz row. Each storage area to be 11" wide x 11" high x 25" deep with a trough in the bottom (same as used in E-ONE wheelwell bottle storage. Bottom and sides of the trough to include ribbed rubber inserts. Each opening to have a vertically mounted strap. Rack to be mounted to the compartment top below off set in R1 off set forward. | $459 |
| 3365-0657 | SCBA/Fire Extinguisher storage. Locate in [#LOC]. To hold (6) bottles floor mounted. There shall be a permanent shelf located 8" off of floor. Space below shall be have 6 equally spaced openings. | $729 |
| 3370-0023 | Tracks for adjustable shelf and/or adjustable tray in single depth or rescue style single depth compartment. Location: [#LOC]. | $194 |
| 3370-0025 | Shelf permanent shelf. Locate in [#LOC]. | $102 |
| 3370-0026 | Adjustable shelf. For compartments that are full height/full depth or lower compartments with full depth. Location: [#LOC]. | $251 |
| 3370-0027 | Tracks for adjustable shelf and/or adjustable tray in the lower area of the compartment. Location: [#LOC]. | $99 |
| 3370-0028 | Tracks for adjustable shelf and/or adjustable tray in the upper area of the compartment. Location: [#LOC]. | $54 |
| 3370-0029 | Adjustable shelf. For compartments with upper shallow depth. Location: [#LOC]. | $128 |
| 3370-0031 | Storage system for compartment L1. Includes vertical partition 24" from right side wall (2) adj. HD tool boards to rear of partition roll-out tray w/24" 500 lb. slides on floor ahead of partition & fixed shelf at the top of the rear wall offset ahead of partition. HP75 / HP78 SideStacker. | $2,795 |
| 3370-0034 | Shelf adj full transverse. Locate in [#LOC]. | $513 |
| 3370-0035 | Shelf adjustable 1/2 depth in transverse compartment. Locate in [#LOC]. | $409 |
| 3370-0036 | Shelf adjustable 250 lbs capacity. 2/3 deep in transverse compartment. Locate in [#LOC]. | $460 |
| 3370-0038 | Adjustable shelf. For lower area of compartments with multiple depths. Location: [#LOC]. | $251 |
| 3370-0039 | Adjustable shelf. For upper area of compartments with multiple depths. Location: [#LOC]. | $251 |
| 3370-0040 | Adjustable shelf for single depth or rescue style single depth compartment. Location: [#LOC]. | $251 |
| 3370-0041 | Adjustable shelf full width for transverse compartment (Memphis aerial). Includes 2" lips on each end (8) 5" holes lengthwise down center of shelf 8" high bolt-on alum stop close to left side (for stokes entering from right) straps below shelf for 19W x 2H x 73L backboard w/stop on left side for backboard. Location: L1/R1 | $1,377 |
| 3370-0042 | Tracks for adjustable shelf and/or adjustable tray in transverse compartment. Location: L1/R1. | $383 |
| 3370-0049 | Tracks for adjustable shelf and/or adjustable tray in transverse compartment. Location: L4/R4. | $383 |
| 3370-0051 | Tracks for adjustable shelf and/or adjustable tray in 1/2 or 2/3rds depth of transverse compartment. Location: [#LOC]. | $291 |
| 3370-0052 | Adjustable shelf (J-Style) for non-transverse compartments 16" or greater in depth. Location: [#LOC]. | $251 |
| 3370-0053 | Adjustable shelf (C-Style) for non-transverse compartments up to 15.99" in depth. Location: [#LOC]. | $128 |
| 3370-0054 | Tracks for adjustable shelf and/or adjustable tray in compartments 16" or greater in depth. Location: [#LOC]. | $194 |
| 3370-0055 | Tracks for adjustable shelf in shallow compartments up to 15.99" deep. Location: [#LOC]. | $99 |
| 3370-0112 | Adjustable shelf tracks to be mounted at Customer's final inspection. | $194 |
| 3370-0115 | Shelf approx. 46"long L1/R1 transverse compartment. Locate in center of transverse up high. | $409 |
| 3370-0116 | Tracks for adjustable shelf and/or adjustable tray in transverse compartment. Note two (2) center tracks on forward and rear wall to extend up to within 2" of ceiling and two outer tracks to remain at standard height. Location: L1/R1. | $633 |
| 3370-0129 | Shelf 1/2 depth in transverse compartment. Rear lip to be 4" high. Locate in [#LOC]. | $442 |

| Item No. | Description | |
|---|---|---|
| 3370-0133 | Tracks shall be provided for use with adjustable shelves and/or trays. The tracks shall align for use of a shallow depth adjustable shelf(s) and/or adjustable tray(s). The tracks shall be ran from floor to ceiling to allow the shallow depth adjustable shelf/tray to have full compartment height adjustability. Position tracks within compartment for optimal adjustability. The tracks as installed from floor to ceiling may be impacted by other items located within the compartment; tracks may be cut and continued again as required to provide full height adjustability. The tracks shall be vertically mounted and attached to the side and/or rear walls of the compartments. Location: [#LOC]. | $194 |
| 3370-0134 | Permanent shelf to have 1" lips. Location: [#LOC]. | $114 |
| 3370-0142 | Permanent shelf for Hurst power unit. Locate on forward bulkhead high as possible [#LOC]. | $695 |
| 3370-0144 | Permanent shelf bolt in suspended from ceiling and forward in compartment. Locate in [#LOC]. | $306 |
| 3370-0149 | Adjustable shelf. For non-transverse compartments that are 16" or greater in depth. The shelf shall have a minimum 2" front rear and side lips. Location: [#LOC]. | $276 |
| 3370-0154 | Adjustable shelf with 2" lips around entire shelf. For compartments that are shallow up to 15.99" depth. Location: [#LOC]. | $237 |
| 3370-0158 | Tracks on rear wall of compartment for equipment mounting. Three (3) aluminum adjustable shelf tracks shall be vertical mounted on the rear wall of the L2 compartment over rear wheel. Tracks shall be located forward and rearward offset from compartment walls 4 inches in the compartment and one centered in the compartment. Tracks shall be for mounting customer equipement and shall not have any shelves included. | $161 |
| 3370-0161 | Stainless steel adjustable shelf. For non-transverse compartments that are 16" or greater in depth. Location: [#LOC]. | $300 |
| 3370-0162 | Stainless steel adjustable shelf. For non-transverse compartments that are up to 15.99" deep. Location: [#LOC]. | $154 |
| 3370-0167 | Mount two (2) pieces of shelf track horizontal from front to back on the back wall for attaching SCBA air bottle brackts to. Use old style adjustable track part # 273490. Locate [#LOC]. | $227 |
| 3370-0170 | Hydraulic hose storage sleeve with retaining strap(s) mounted to bottom of adjustable shelf. Located below R1 upper adjustable shelf offset forward. Storage sleeve shall be approximately 32" wide x 5" high x full depth of shelf. Includes partition in center to divide into (2) compartments. Material finish to match shelf. | $385 |
| 3370-0171 | Compartment R2 to have an "L" shaped shelf bolted to the ceiling and front wall to support the (8) air bottle storage. | $324 |
| 3370-0172 | Adjustable shelf (J-Style) for non-transverse compartments 16 in. or greater in depth. Shelf to be partial depth and extend from back wall 18in. or as applicable per compartment depth options. Design to offset attach to standard location adjustable tracks and relief notch as needed to adjust at breaker box or similar compartment mounted options.. Location: [#LOC]. | $251 |
| 3370-0178 | Permanent shelf. Locate in L3 approximately 1/2 depth of compartment even with bottom of lower 3x3 extrusion at turntable access panel on back wall. | $91 |
| 3370-0179 | All adjustable and fixed shelves to be extended outboard towards door opening and inboard towards back wall as far as possible. Note outboard corners may require notching for compartment track lighting (if applicable). | $394 |
| 3370-0182 | Permanent shelf bolt in and full transverse mounted located above the upper transverse Speedlay assembly as low as the speedlay plumbing and tray will allow. | $306 |
| 3370-0183 | Shelf adjustable 250 lbs capacity with a notch to maximize compartment shape. A 2/3 deep adjustable shelf shall be provided in transverse compartment. Design to include a notch to clear body feature obstruction. Locate in [#LOC]. | $554 |
| 3370-0186 | Permanent shelf. Locate in L1 9" off floor. | $196 |
| 3370-0187 | Permanent shelf. Locate in R1. Locate the shelf to bottom of the rear suction cover box.. | $102 |
| 3370-0188 | All shelves adjustable and permanent to have 4" lips IPOS. | $411 |
| 3370-0189 | Adjustable shelf with inverted for mounting of adjustable trays due to the gear box cover for the ladder rack. For compartments that are full height/full depth or lower compartments with full depth. Location: L1. | $251 |
| 3370-0190 | Permanent shelf. Locate in Battery compartment. Height to be approximately 2" above chassis batteries. | $102 |
| 3370-0191 | Adjustable shelf (C-Style) tilted at 45 degrees (inboard edge tilted up) for mounting miscellaneous tools. Includes fixed mounted peg toolboard attached to shelf for tools to mount too. Toolboard to be spaced off shelf a half inch. Location: [#LOC]. | $447 |
| 3370-0192 | Permanent shelf bolt in and full transverse mounted located in L1/R1 just above breaker box. | $306 |
| 3370-0193 | Adjustable shelf (C-Style) for non-transverse compartments up to 15.99" in depth. Shelf to be half the width of the compartment. Location: [#LOC]. | $128 |

| Item No. | Description | |
|---|---|---|
| 3370-0194 | Compartment R2 to have the following storage package: (1) vertical partition 12" off forward wall and (1) adjustable shelf in upper section rear of the partition. | $671 |
| 3370-0196 | Adjustable shelf for non-transverse compartment. Location: [#LOC]. | $251 |
| 3370-0198 | Permanent shelf. Locate in [#LOC]. | $102 |
| 3370-0199 | Vertically mounted tracks for adjustable shelves and/or trays for non-transverse compartment [#LOC]. | $194 |
| 3370-0202 | Adjustable shelf for non-transverse compartment. The shelf shall have inverted lips. Location: [#LOC]. | $251 |
| 3370-0206 | Permanent mounted shelf for non-transverse compartment. The shelf shall have inverted lips. Location: [#LOC]. | $251 |
| 3370-0214 | Tracks for adjustable shelf in shallow compartments up to 15.99" deep. Location: [#LOC]. | $194 |
| 3370-0215 | Adjustable shelf (C-Style) for non-transverse compartments up to 15.99" in depth. For shelf tracks mounted on front and rear side compartment walls. Location: [#LOC]. | $255 |
| 3380-0014 | Roll-out generator tray. Includes tray interlock. Locate [#LOC]. | $812 |
| 3380-0015 | Fixed back wall mounted toolboard. Toolboard to be spaced off wall a half inch. Location(s): [#LOC]. | $226 |
| 3380-0017 | Floor mounted slide master roll-out/tilt down tray. Single depth. Mount on [#LOC] floor. | $1,143 |
| 3380-0018 | Adjustable roll-out toolboard. Includes upper and lower adjustable track with 250 lbs. slides and gas shock actuated. Toolboard sized to compartment height and depth as applicable. Location(s): [#LOC]. | $840 |
| 3380-0019 | Running board suction tray. Includes removable slats in bottom of tray. Location(s): [#LOC] | $535 |
| 3380-0022 | Floor mounted roll-out tray. Includes 500lbs. tray capacity. Location: [#LOC]. | $890 |
| 3380-0023 | Adjustable mounted roll-out/tilt-down tray. Location(s): [#LOC]. For use in single depth or rescue style compartments. | $1,445 |
| 3380-0024 | Adjustable mounted roll-out tray. Includes 250 lbs tray capacity. Location(s): [#LOC] | $980 |
| 3380-0025 | Adjustable mounted roll-out tray. Includes 500 lbs tray capacity. Location(s): [#LOC] | $1,190 |
| 3380-0027 | Floor mounted SlideMaster with tray. Model SM3-SP. Single depth. Mount on [#LOC] floor. | $916 |
| 3380-0028 | Adjustable mounted Slide Master with tray. Model SM3-SP. Single depth. Location(s): [#LOC] | $1,213 |
| 3380-0029 | Floor mounted Bi-Directional Slide Master with tray. Model SM2-D-SP. Mounted on [#LOC]. | $1,577 |
| 3380-0030 | Adjustable mounted bi-directional Slide Master with tray. Model SM2-D-SP. Mounted in transverse area of [#LOC]. | $1,874 |
| 3380-0036 | Fixed wall mounted peg tool board. Tool board to be spaced off wall a half inch. Location(s): [#LOC]. | $271 |
| 3380-0038 | Floor mounted roll-out tray with Jonathan Slides. Includes 400lbs. tray capacity. Mount on [#LOC] floor. | $1,556 |
| 3380-0039 | Adjustable mounted roll-out tray with Jonathan Slides. Includes 400 lbs tray capacity. Location(s): [#LOC] | $1,855 |
| 3380-0040 | Vertical hinged swing-out tool board. Location: [#LOC]. Hinge along forward compartment wall and position centered between door and back wall. Includes butterfly latch to secure in the closed position that is accessible from the ground. | $1,578 |
| 3380-0041 | PAC TRAC panels vertical stacked with tool mounting grooves orientated horizontal on back wall of compartment. Locate: [#LOC]. | $815 |
| 3380-0045 | Floor mounted Slide Master with tray. Model SM3-SP. 1/2 depth transverse or full depth on non transverse. Mount on [#LOC] floor. | $1,193 |
| 3380-0049 | Running board suction tray (floating style). Includes tapered 3" front corner and removable slats in bottom of tray. Location(s): [#LOC]. | $694 |
| 3380-0052 | Rollout tool boards (PR). To hold Memphis F.D aerial compliment of Holmatro tools (Bracketry to be dealer installed). Locate against front and rear wall of R1. | $3,801 |
| 3380-0055 | Floor mounted roll-out/tilt down tray with aluminum frame. Mount on [#LOC] floor. | $1,114 |
| 3380-0056 | Adjustable mounted roll-out/tilt down tray with aluminum frame. Location(s): [#LOC]. For use in single depth or rescue style compartments. | $1,410 |
| 3380-0059 | Running board suction tray. Outboard (front) wall of tray and rubrail hinged at the bottom with quick release latches for drop down door. Includes tapered 3" front corner and removable slats in bottom of tray. Location(s): [#LOC] | $864 |
| 3380-0060 | Adjustable tool board with 500 lbs slides. Includes upper and lower adjustable track and gas shock actuated. Tool board sized to compartment height and depth as applicable. Location(s): [#LOC]. | $1,155 |
| 3380-0061 | Compartment underbody. Includes drop down front door with D-ring latches. Locate [#LOC]. | $1,561 |
| 3380-0062 | Adjustable peg tool board. Includes upper and lower adjustable track and gas shock actuated. Tool board sized to compartment height and depth as applicable. Location(s): [#LOC]. | $1,009 |

| Item No. | Description | |
|---|---|---|
| 3380-0063 | Ready Respond Storage cabinet. Includes (5) drawers with gray fronts. No side trim required. Locate floor mounted in [#LOC]. | $4,134 |
| 3380-0065 | Vertical hinged swing-out toolboard. Location: [#LOC]. Hinge along forward compartment wall and position centered between door and back wall. Includes D-Ring latch to secure in the closed position that is accessable from the ground. | $1,578 |
| 3380-0068 | Floor mounted equally sized roll-out trays (PR). Includes 250lbs. tray capacity. Mount on [#LOC] floor. | $1,360 |
| 3380-0069 | Adjustable tool board - notched. Includes upper and lower adjustable track and is gas shock actuated. Tool board sized to compartment height and depth as applicable. Upper end to be notched around compartment offset to provide maximum height. Location(s): [#LOC] | $962 |
| 3380-0070 | (2) Rollout Trays with 500lb slides approx. 27"W x 44"D to be floor mounted one each side on upper transverse floor offset forward in L1/R1. | $1,229 |
| 3380-0071 | Tool board on dual direction 1000 lb. SlideMaster. Includes lock-in/lock-out. Tool board sized to compartment height and depth as applicable. Location(s): [#LOC]. | $2,261 |
| 3380-0074 | Tool board HD adjustable. Includes upper and lower adjustable track and is gas shock actuated return style re-enforcing bends on vertical front and rear edges of tool board upper and lower adjustable track and gas shock actuated. Tool board sized to compartment height and depth as applicable. Location(s): [#LOC] | $898 |
| 3380-0076 | Tray floor mounted roll-out with gas spring. 500 lbs. capacity. Location: [#LOC]. | $683 |
| 3380-0077 | Tray adjustable roll-out with 500 lbs. capacity and a gas shock. Location(s): [#LOC]. | $980 |
| 3380-0079 | Adjustable heavy duty tool board with 500 lbs. capacity. Includes return style reinforcing bends on vertical front and rear edges of tool board upper and lower adjustable track and gas shock actuated. Tool board sized to compartment height and depth as applicable. Location(s): [#LOC]. | $898 |
| 3380-0080 | Adjustable heavy duty tool pegboard with 500 lbs. capacity. Includes return style reinforcing bends on vertical front and rear edges of tool board upper and lower adjustable track and gas shock actuated. Tool board sized to compartment height and depth as applicable. Location(s): [#LOC]. | $1,067 |
| 3380-0081 | Roll-out generator tray. Includes tray interlock. Locate [#LOC]. | $812 |
| 3380-0082 | Slidemaster frame powder coated black (EA). Location: [#LOC]. | $123 |
| 3380-0087 | Adjustable toolboard with 500 lb. slides for use with deep compartments. Includes upper and lower adjustable track with lock in/lock out latch. Toolboard sized to compartment height and depth as applicable. Location(s): [#LOC]. | $1,155 |
| 3380-0093 | Floor mounted roll-out/tilt down tray. Mount on [#LOC] floor. For use on half transverse trays. | $1,143 |
| 3380-0094 | Floor mounted roll-out/tilt down tray. Mount on [#LOC] floor. For use on two thirds transverse trays or in the B1above the frame rails. | $1,143 |
| 3380-0095 | Adjustable mounted roll-out/tilt down tray. Location(s): [#LOC]. For use on 1/2 depth transverse trays or upper deep B1 compartment. | $1,445 |
| 3380-0096 | Adjustable mounted roll-out/tilt down tray. Location(s): [#LOC]. For use on 2/3 deep transverse trays or B1above the frame rails. | $1,445 |
| 3380-0099 | Vertical hinged swing-out toolboard. Location: [#LOC]. Hinge along rearward compartment wall and position centered between door and back wall. Includes D-Ring latch to secure in the closed position that is accessable from the ground and a positive hold open device in the open position. | $1,578 |
| 3380-0100 | SlideMaster slideout tray w/hose tray approx 8.625 wide x 124 long x 16 deep to hold 200' of 5" LDH. Includes handrail at rear top corner of tray and slotted holes in floor for hose ventaltion. Floor mounted at rear of body in ladder tunnel on officer side. | $1,586 |
| 3380-0125 | Running board suction tray. Outboard (front) wall of tray and rubrail hinged at the bottom with quick release latches for drop down door. Includes removable slats in bottom of tray. Location(s): [#LOC] | $864 |
| 3380-0133 | On Scene Solutions floor mounted roll-out/tilt down tray mount on [#LOC] floor. This tray shall not exceed 30" in depth. | $1,551 |
| 3380-0134 | On Scene Solutions adjustable mounted roll-out/tilt down tray mount in the [#LOC] compartment. This tray shall not exceed 30" in depth. | $1,842 |
| 3380-0150 | Fixed back wall mounted toolboard with swirled finish. Toolboard to be spaced off wall a half inch. Location(s): [#LOC]. | $371 |
| 3380-0155 | Running board suction tray. Includes Turtle Tile brand black floor matting in bottom of tray. Location(s): [#LOC]. | $535 |
| 3380-0158 | Floor mounted roll-out tray. Includes OnScene Solutions slide 81900 series. 500 lbs. tray capacity. Location: [#LOC]. | $2,013 |

| Item No. | Description | |
|---|---|---|
| 3380-0159 | Adjustable tool board with 500 lbs slides. Includes upper and lower adjustable track .75" x .75" aluminum angle welded to front edge and gas shock actuated. Tool board sized to compartment height and depth as applicable. Location(s): [#LOC]. | $898 |
| 3380-0162 | Vertical hinged swing-out pegboard toolboard. Location: [#LOC]. Hinge along rearward compartment wall and position centered front to rear. Includes latch to secure in the closed position and gas shock to secure in the open position that is accessible from the ground. | $1,711 |
| 3380-0167 | Vertical hinged heavy duty swing-out toolboard. Location: [#LOC]. Hinge along forward compartment wall and position centered between door and back wall. Includes D-Ring latch to secure in the closed position that is accessible from the ground. Hinge made from 1/2" stainless steel rod and stainless steel plate with flanged bearing top and bottom. | $1,657 |
| 3380-0168 | Floor mounted roll-out tray with 500 lbs. capacity. Locate in R1 offset forward. Tray to be half the width of compartment. | $683 |
| 3380-0169 | Adjustable roll-out tray with 500 lbs. capacity. Tray to have 6" lips. Location(s): [#LOC]. | $1,262 |
| 3380-0171 | Floor mounted bi-directional Slide Master with tray. Model SM2-D-SP. Rear wall of tray to extend up as high as possible to make a toolboard. Includes return style reinforcing bends on vertical sides and horizontal top edges of toolboard. Mounted on floor of L1/R1 transverse. | $2,019 |
| 3380-0173 | Vertical hinged heavy duty swing-out pegboard toolboard. Location: [#LOC]. Hinge along forward compartment wall and position centered between door and back wall. Includes D-Ring latch to secure in the closed position that is accessable from the ground. Hinge made from 1/2" stainless steel rod and stainless steel plate with flanged bearing top and bottom. | $1,752 |
| 3380-0177 | Prepare upper back walls of compartment L3 and L4 with studs for dealer to provide plywood (or whatever material) toolboard panels. Studs are to be threaded stainless steel. | $300 |
| 3380-0179 | Vertical hinged heavy duty swing-out aluminum tool board(s) shall be provided for compartment(s) [#LOC]. The tool board shall be constructed of 1/4" (.25") smooth aluminum plate peg board style and be sized in height and length as applicable. The tool board shall be position centered between door and back wall and hinged along rearward wall mounted. The hinge shall be made from 1/2" stainless steel rod and stainless steel plate with flanged bearing top and bottom that will permit the board to swing out of the compartment for easier access to tools and/or equipment. The tool board shall latch to a 3" x 3" extrusion with a Tri-Mark latch to secure the toolboard in the closed position. | $2,139 |
| 3380-0180 | (2) Hand hold slotted cut-outs shall be provided on rollout tray's front wall (one each side) for easier roll-out/roll-in. Rubber trim shall line the hand cut outs. Approximate size of cut-out to be 1-1/2" x 5". Locate on each tray in [#LOC]. | $40 |
| 3380-0181 | Vertical hinged swing-out toolboard. Located in [#LOC] 12" from door. Hinge along rearward compartment wall and position centered between door and back wall. Includes D-Ring latch to secure in the closed position that is accessable from the ground and a positive hold open device in the open position. | $1,578 |
| 3380-0182 | Floor mounted slidemaster roll-out tray to hold (3) SCBA donning stations. Donning stations will be Zico spring clip brackets. Location [#LOC]. | $1,802 |
| 3380-0189 | Running board suction tray with a diamond plate door hinged on the inboard side with quick release flush latch(s) and a lanyard type holding device. Includes removable slats in bottom of tray. Location(s): [#LOC]. | $1,134 |
| 3380-0191 | Vertical hinged heavy duty swing-out toolboard. Location: [#LOC]. Hinge along rearward compartment wall and position centered between door and back wall. Includes D-Ring latch to secure in the closed position that is accessible from the ground. Hinge made from 1/2" stainless steel rod and stainless steel plate with flanged bearing top and bottom. | $1,657 |
| 3380-0194 | PAC TRAC panels vertical stacked with tool mounting grooves orientated horizontal on each side of Swing-out Toolboard. Locate:[#LOC]. | $1,629 |
| 3380-0196 | Vertical hinged heavy duty swing-out pegboard toolboard. Location: [#LOC]. Hinge along rearward compartment wall and includes D-Ring latch to secure in the closed position that is accessible from the ground. Hinge made from 1/2" stainless steel rod and stainless steel plate with flanged bearing top and bottom. | $1,736 |
| 3380-0197 | Floor mounted roll-out/tilt down tray with aluminum frame. Mount on [#LOC] floor. Tray(s) to have 2" high sides all around IPO standard. | $1,114 |
| 3380-0198 | Adjustable mounted roll-out/tilt down tray with aluminum frame. Location(s): [#LOC]. Tray(s) to have 2" high sides all around IPO standard. For use in single depth or rescue style compartments. | $1,410 |

| Item No. | Description | |
|---|---|---|
| 3380-0199 | Floor mounted bi-directional Slide Master with tray. Model SM2-D-SP. Includes fixed toolboard centered in tray lengthwise extending up as high as possible. Toolboard to be fabricated from 1.5" square aluminum tubing for frame and centered inside of frame shall be .250" smooth plate with bracing on each end for rigidity when tools are mounted. Tray/toolboard mounted on L1/R1 transverse floor. | $2,442 |
| 3380-0200 | Running board suction tray (floating style). Includes tapered 3" front corner and removable slats in bottom of tray. Location(s): [#LOC]. Trays to be smooth plate painted black durabak. | $879 |
| 3380-0203 | Adjustable peg tool board. Includes upper and lower adjustable track and gas shock actuated. Tool board sized to compartment height and depth as applicable. Location(s): [#LOC]. | $974 |
| 3380-0204 | Floor mounted Slide Master with tray. Model SM3-LP (low profile). Single depth. Mount on [#LOC] floor. | $977 |
| 3380-0206 | Adjustable peg tool board. Includes upper and lower adjustable track with lock in/lock out latch. Slides for use with deep compartments. Toolboard sized to compartment height and depth as applicable. Location(s): [#LOC]. | $1,228 |
| 3380-0210 | Pac Trac panels vertically stacked on forward wall of transverse storage box located in L1/R1. | $1,490 |
| 3380-0211 | Officer side running board suction tray shall have 1/2" drain holes IPOS. | $28 |
| 3380-0212 | Floor mounted rollout tray/toolboard with gas spring and 500 lbs. capacity. The vertical peg board tool board will be mounted on adjustable mount(s) on the floor of the roll out tray. Includes return style reinforcing bends on vertical front and rear edges of tool board. Tool board sized to compartment height and depth as applicable. Location: [#LOC]. | $1,460 |
| 3380-0220 | Floor mounted roll-out/tilt down and adjustable mounted roll-out/tilt down trays with aluminum frame. Trays to have 2" high sides all around IPO standard. Mount in [#LOC] compartment. | $2,523 |
| 3380-0222 | Floor mounted roll-out inverted tray with 500 lbs. capacity. Location: [#LOC]. | $683 |
| 3380-0224 | Floor mounted roll-out tray with gas spring. 500 lbs. capacity. Tray shall be made of 1/4" smooth aluminum. Location: [#LOC]. | $904 |
| 3380-0229 | Adjustable toolboard partition. With unistrut track mounted to inside of rollout tray on floor for toolboard to adjust side to side. Toolboard to be fabricated from 1.5" square aluminum tubing for frame and centered inside of frame shall be .250" smooth plate with bracing on each end for rigidity when tools are mounted. Locate in [#LOC] floor mounted roll-out tray. | $530 |
| 3380-0230 | Compartment underbody. Includes drop down front door with push-button latches. Locate: Span below R1 and R2. | $1,461 |
| 3380-0233 | Adjustable roll-out tray with 500 lbs. capacity. Tray to have raised forward lip with hole(s) to accommodate mounting of captive rollers for optioned reels in compartment. Tray at full extension shall position rollers outward to provide additional protection from hoses chafing or damaging painted surfaces: [#LOC]. | $1,332 |
| 3380-0236 | Vertical hinged heavy duty swing-out toolboard with storage trough(s). Location: [#LOC]. Hinge along forward compartment wall and position centered between door and back wall. Includes D-Ring latch to secure in the closed position that is accessible from the ground. The Toolboard shall include a 5" x 5" Trough enclosed on each end and running full length along the botom edge of the board both inside and outside (for as long as available space allows when fully opened) used for small containers storage. Hinge made from 1/2" stainless steel rod and stainless steel plate with flanged bearing top and bottom. | $1,811 |
| 3380-0237 | Compartment underbody 30" wide. Includes drop down front door with push-button latches. The storage compartment shall hold approximately 50` of 3" DJ hose. Locate [#LOC}. | $1,256 |
| 3380-0238 | Pac Trac Vertical hinged swing-out toolboard adjustable in and out. Location: [#LOC]. Hinge along forward compartment wall. Includes latch to secure in the closed position that is accessible from the ground. | $1,630 |
| 3380-0240 | Floor mounted stainless steel roll-out tray. Includes OnScene Solutions slide 81900 series. 500 lbs. tray capacity. Location: [#LOC]. | $2,041 |
| 3380-0243 | Adjustable roll-out tray. Includes 500lbs. tray capacity. Location: L3 compartment. The tray to be maximum of 20" deep x standard compartment width size. Use 20" long slides due to the enhanced extended compartmentation. | $980 |
| 3380-0246 | Running board suction tray. Includes removable slats in bottom of tray. Tray inside dimensions to be 35" long from front to back x 10" from rub rail inward to pump panel x 9.5" total depth inside. Tray shall be equipped with a removable slat which will reduce the listed depth dimension. The outboard edge of the tray shall have no folded lip and shall bolt through rub rail to allow for max width. Location(s): [#LOC] | $584 |
| 3380-0247 | Floor mounted roll-out tray 48" wide sized for portable pump. Includes 500lbs tray capacity. Location: R1 offset forward. | $890 |

| Item No. | Description | |
|---|---|---|
| 3380-0249 | Compartment underbody. Includes drop down front door with push-button latches. To hold approximately 25' of 5" LDH hose in each underbody compartment. Locate below L1/R1. | $1,256 |
| 3380-0261 | Roll-out generator tray. Includes tray interlock. Locate R3. 23 x 18 x 3 spaced from forward wall 8 inches. | $812 |
| 3380-0262 | Vertical hinged heavy duty swing-out toolboard. Location: L2. Hinge along forward compartment wall and position so that face of toolboard will be 6" into compartment from back of closed door. Includes D-Ring latch to secure in the closed position that is accessible from the ground. Hinge made from 1/2 | $1,657 |
| 3380-0264 | PAC TRAC panels vertical stacked with tool mounting grooves orientated horizontal on forward and rearward side walls of compartment L2. | $548 |
| 3380-0265 | Tray floor mounted roll-out with gas spring. 500 lbs. capacity. The front and rear lips shall be 1.5" high. Location: [#LOC]. | $683 |
| 3380-0268 | Tray / toolboard combination floor mounted roll-out with gas spring. 500 lbs. capacity. The tray portion to be rearward. L1 rearward of CAFS unit. | $1,548 |
| 3380-0273 | Fixed back wall mounted toolboard. Toolboard to be spaced off wall a half inch. Location(s): L1 lower on forward rearward and back walls. Note toolboard fixed to back wall will be removable due to jack access. | $226 |
| 3380-0274 | Vertical hinged heavy duty swing-out toolboard. Location: [#LOC]. Hinge along forward compartment wall and position centered between door and back wall. Includes D-Ring latch to secure in the closed position that is accessible from the ground and a ball type nylon catch with a ball socket rod to hold device in the open position. Hinge made from 1/2" stainless steel rod and stainless steel plate with flanged bearing top and bottom. | $1,694 |
| 3380-0275 | Vertical hinged heavy duty swing-out toolboard. Location: [#LOC]. Hinge along forward compartment wall and position 8 in. in from door opening between door and back wall. Includes D-Ring latch to secure in the closed position that is accessible from the ground and a ball type nylon catch with a ball socket rod to hold device in the open position. Hinge made from 1/2" stainless steel rod and stainless steel plate with flanged bearing top and bottom. | $1,694 |
| 3380-0278 | Running board suction tray. Includes removable slats in bottom of tray. Tray to be as long and as deep as possible to hold 50' of 5.00" LDH hose with Storz couplings. Location(s): officer side runningboard. | $765 |
| 3380-0279 | Floor mounted SlideMaster tray with aluminum frame. Model M3. Single depth. Mount on [#LOC] floor. | $1,216 |
| 3380-0282 | All floor mounted and adjustable tray(s) to have 4" high sides all around IPO standard. | $411 |
| 3380-0289 | Fixed back wall mounted peg toolboard. Toolboard to be spaced off wall an inch. Location(s): [#LOC]. | $271 |
| 3380-0292 | Tray floor mounted roll-out with gas spring. 500 lbs. capacity. For use with half transverse tray. Tray travel will be limited to 26 inches of extension. Location: [#LOC]. | $683 |
| 3380-0293 | Floor mounted bi-directional Slide Master with tray. Aluminum Model M2D. Mounted on [#LOC]. | $1,884 |
| 3380-0296 | Tray floor mounted roll-out with mechanical rotary latch system. 500 lbs. capacity. Location: [#LOC]. | $683 |
| 3380-0297 | SlideMaster slide out tray w/hose tray approx 10.875 wide x 124 long x 16 deep to hold 400' of 2.5" DJ. Includes handrail at rear top corner of tray and slotted holes in floor for hose ventilation. Floor mounted at rear of body in ladder tunnel on driver side. | $1,586 |
| 3380-0301 | PAC TRAC panels vertical stacked with tool mounting grooves orientated horizontal on forward wall of L1/R1 transverse compartment. | $1,630 |
| 3380-0302 | Adjustable heavy duty tool board with 500 lb capacity. Includes return style reinforcing bends on vertical front and rear edges of tool board upper and lower adjustable track and gas shock actuated. Tool board sized to compartment height and depth as applicable. Upper end to be notched around compartment offset to provide maximum height. Relocate upper slide as applicable for maximum extension of toolboard. Location(s): [#LOC]. | $962 |
| 3380-0304 | Tray floor mounted roll-out with gas spring. 500 lbs. capacity. Location: L1 Tray to include a center vertical mounted peg board divider to extend 26in. above the top of the tray lip into open area above in compartment. Peg board will be centered in tray and positioned to utilize peg board storage on the forward and rearward sides of the board as mounted. Peg board to be utilized for fitting and tool storage. | $880 |
| 3380-0306 | Fixed wall mounted peg toolboard. Toolboard to be spaced off wall a half inch on forward rearward and back wall from floor to ceiling (as practical). Location(s): [#LOC]. | $1,080 |
| 3380-0307 | SlideMaster generator roll-out tray with interlock. Model SM3-SP. Single depth. Mount on [#LOC] floor. | $1,065 |

| Item No. | Description | |
|---|---|---|
| 3380-0310 | Fixed upper transverse wall mounted peg toolboard. Toolboard to be spaced off wall a half inch. Includes cutouts in toolboard for adjustable shelf tracking for shelving to be as wide as possible. Toolboard to align with top of transverse shelf and extend out to door opening and as high as practical. Location(s): L1/R1 forward wall. | $1,079 |
| 3380-0311 | Fixed upper transverse wall mounted peg toolboard. Toolboard to be spaced off wall a half inch. Includes cutouts in toolboard for adjustable shelf tracking for shelving to be as wide as possible. Toolboard to align with top of transverse shelf and extend out to door opening and as high as practical. Location(s): L1/R1 rearward wall. | $1,079 |
| 3380-0312 | Fixed wall mounted peg toolboard. Toolboard to be spaced off wall a half inch on forward rearward and back wall from floor to ceiling as practical. Location(s): [#LOC]. | $810 |
| 3380-0314 | Vertical hinged heavy duty swing-out toolboard. Location: R2. Hinge along forward compartment wall and position centered between door and back wall. Includes Tri-Mark latch to secure in the closed position that is accessible from the ground. Hinge made from 1/2" stainless steel rod and stainless steel plate with flanged bearing top and bottom. | $1,738 |
| 3380-0316 | Vertical hinged severe duty swing-out tool board. Location:[#LOC] Hinge along rearward compartment wall and position centered between door and back wall. Includes positive lock to secure in both closed and open position that is accessible from the ground. Heavy duty pivots for 400lb weight capacity on tool board. Tool board is to be Peg board style with 1in. on center pattern for the peg board holes. | $3,815 |
| 3380-0318 | Floor mounted Slide Master with flat plate. Model SM3-MP (Mid profile) with 300 Lb capacity. For use with deep compartments. Located upper pump module compartment. | $1,189 |
| 3380-0322 | Floor mounted roll-out tray. Includes 500lbs. tray capacity. No lip on tray. Location: L3. | $890 |
| 3380-0327 | Adjustable mounted Hansen roll-out/tilt-down tray. Location(s): R2. For use in single depth or rescue style compartments. | $1,445 |
| 3380-0328 | Adjustable heavy duty two sided peg board roll-out aluminum tool board with hidden gas shock . Includes return style re-enforcing bends on vertical front and rear edges of tool board with boxed in design upper and lower adjustable track and gas shock actuated. Tool board sized to compartment height and depth as applicable. Location(s): [#LOC] | $1,067 |
| 3380-0329 | Adjustable heavy duty two sided tool board with 500 lbs. capacity. Includes return style reinforcing bends on vertical front and rear edges of tool board and boxed in design upper and lower adjustable track and gas shock actuated. Tool board sized to compartment height and depth as applicable. Location(s): [#LOC]. | $898 |
| 3380-0331 | Floor mounted Slide Master with tray. Model SM3-SP. 1/2 depth transverse or full depth on non transverse. Tray side walls to be 6 inches tall. Design includes (4) four 2 inch diameter holes equally spaced each side wall of tray for hold down strap attachment. Mount on [#LOC] floor. | $1,433 |
| 3380-0333 | Running board suction tray (floating style). Includes tapered 3" front corner and removable slats in bottom of tray. Tray to be as long as possible. Also tray to be wider than standard to accommodate three lays of 1.75" DJ hose. Requires 2" wider running board. Location(s): [#LOC]. | $952 |
| 3380-0334 | Vertical hinged heavy duty swing-out toolboard. Location: [#LOC]. Hinge along forward compartment wall and position close at door opening just inside envelope to clear door. Customer to utilize the back wall of the compartment and the back wall of the swing out tool board only. Includes D-Ring latch to secure in the closed position that is accessible from the ground. Hinge made from 1/2in. stainless steel rod and stainless steel plate with flanged bearing top and bottom. | $1,657 |
| 3380-0335 | PAC TRAC panels vertical stacked with tool mounting grooves orientated horizontal on back side of Swing-out Tool board. Locate:[#LOC]. | $814 |
| 3380-0338 | Adjustable mounted Hansen roll-out/tilt-down tray. Location(s): R1. For use in single depth or rescue style compartments. | $1,445 |
| 3380-0339 | Running board suction tray with extra capacity (see drawing for details). Includes removable slats in bottom of tray. Location(s): [#LOC] | $641 |
| 3380-0340 | PAC TRAC panels vertical stacked with tool mounting grooves orientated horizontal on rearward wall of compartment. Locate: [#LOC]. | $815 |
| 3380-0341 | PAC TRAC panels vertical stacked with tool mounting grooves orientated horizontal on forward rearward and back walls of compartment R1 upper and lower. | $1,000 |
| 3380-0342 | PAC TRAC panels vertical stacked with tool mounting grooves orientated horizontal on forward rearward and back walls of compartment L1 upper only. | $518 |
| 3380-0345 | Running board suction tray. Includes removable slats in bottom of tray. Tray to be as long as possible. Also tray to be wider than standard to accommodate three lays of 1.75" DJ hose. Requires 2" wider running board. Location(s): [#LOC]. | $1,221 |

| Item No. | Description | |
|---|---|---|
| 3380-0349 | Floor mounted Slide Master with tray. Model SM3-SP. Floor mounted at rear of body in ladder tunnel on driver side. | $1,337 |
| 3380-0361 | Adjustable heavy duty tool pegboard with 500 lbs. capacity. Includes return style reinforcing bends on vertical front and rear edges of tool board upper and lower adjustable track and gas shock actuated. Tool board sized to compartment height and depth as applicable. Upper end to be notched around compartment offset to provide maximum height. Relocate upper slide as applicable for maximum extension of toolboard. Location(s): [#LOC]. | $1,131 |
| 3380-0362 | Adjustable mounted Hansen roll-out/tilt-down tray. Location(s): [#LOC] For use in single depth or rescue style compartments. | $1,445 |
| 3380-0364 | Adjustable roll-out tray with 500 lbs. capacity. Tray to have 4" lips. Location(s): [#LOC]. | $1,262 |
| 3380-0379 | Floor mounted Bi-Directional Slide Master with tray. Model SM2-D-SP. Mounted inside cab medical cabinet. The tray shall be made as wide as possible. Options like rear wall cab heaters etc will reduce the width of the tray. | $1,884 |
| 3380-0381 | Tool board(s) to have a hand hold cutout on each outboard edge. | $259 |
| 3380-0383 | Tray floor mounted roll-out with gas spring and "Hansen" slides. 500 lbs. capacity. Location: [#LOC]. | $1,103 |
| 3380-0384 | Tray with 6" sides floor mounted roll-out with gas spring and "Hansen" slides. 500 lbs. capacity. Location: [#LOC]. | $1,218 |
| 3380-0385 | Adjustable mounted roll-out tray with gas spring and "Hansen" slides. 500 lbs tray capacity. Location(s): [#LOC] | $1,611 |
| 3390-0053 | Lower rear compt to have two vertical dividers creating three storage areas approx 8.25" W x 7.25" H x 96"L with .375 polyethyene on floor of each area. | $967 |
| 3390-0503 | An adjustable partition wall(s) will be locate in [#LOC]. This will include both top and bottom adjustable tracks. | $668 |
| 3390-0509 | Bolt-in vertical peg board style partition wall. Locate in [#LOC]. | $227 |
| 3390-0512 | Partition transverse. A transverse bolt-in vertical partition wall shall be provided. Locate in [#LOC]. | $520 |
| **PUMP AND PLUMBING** | | |
| 4000-0036 | Stainless Steel Victaulic couplings for all discharge and intake plumbing. | $4,230 |
| 4005-0010 | Hale RSD (1250 GPM) single stage PTO driven pump. For use with rear mount pump body and mid-ship engine applications. | $28,241 |
| 4005-0011 | Hale 8FG Pump 3000/3500 GPM single stage | $45,750 |
| 4005-0012 | Hale 8FGR 1500-2000 GPM Pump single stage | $43,736 |
| 4005-0013 | Hale QFLO 750-1250 GPM pump single stage. | $23,739 |
| 4005-0014 | Hale QMID 1250 GPM single stage Pump | $31,994 |
| 4005-0015 | Hale QMAX 1000-1250 GPM single stage Pump | $28,551 |
| 4005-0016 | Hale QMAX 1000-2250 GPM single stage pump. | $28,551 |
| 4005-0017 | Hale QTWO 1000-1250 GPM two stage Pump | $36,062 |
| 4005-0018 | Hale QTWO 1500-2000 GPM two stage pump. | $37,025 |
| 4005-0019 | Waterous CS 750-1250 single stage pump. | $24,924 |
| 4005-0020 | Waterous CM 750-1250 two stage Pump | $28,626 |
| 4005-0021 | Waterous CSU 1500-2250 GPM single stage pump. | $28,271 |
| 4005-0022 | Waterous CMU 1500-2250 GPM two stage pump. | $42,907 |
| 4005-0023 | Waterous S100 2000 GPM Pump for RLP | $38,292 |
| 4005-0036 | Extended Hale Pump 1 Year Warranty in addition to the standard 2 year warranty. | $745 |
| 4005-0037 | Extended Hale Pump 2 Year Warranty in addition to the standard 2 year warranty. | $1,431 |
| 4005-0038 | Extended Hale Pump 3 Year Warranty in addition to the standard 2 year warranty. | $2,118 |
| 4005-0039 | Extended Waterous Pump 3 Year Warranty in addition to the standard 2 year warranty. | $1,800 |
| 4005-0044 | Rating 3000 GPM Industrial | $2,801 |
| 4005-0052 | Hale QMAX 1500-2250 GPM single stage pump with K Gear Box | $29,653 |
| 4005-0057 | Hale DSD Pump 750/1500 GPM single stage | $32,260 |
| 4005-0060 | Hale HPX300 BD26 Hale Portable Pump mounted in pan. W/Remote controls in Cab. Hook up to Chassis Fuel System. | $20,842 |
| 4005-0063 | Hale QFLO Plus 750-1250 GPM Pump single stage | $43,910 |
| 4005-0085 | Hale QMAX-21L 1750 pump. Tradition. | $25,408 |
| 4005-0098 | Waterous Pump TPP-5 Extended Warranty. | $1,800 |
| 4005-0099 | Hale Pump Pro-Tech Extended 3 Year Warranty in addition to the standard 2 year warranty. | $2,036 |
| 4005-0122 | Waterous CSU 1500-2250 GPM single stage Pump. Shall include the Endurance CSC20 Waterous C20 transmission. | $39,568 |
| 4005-0129 | Hale 8FG single stage pump. For use with Industrial products. | $39,655 |
| 4005-0131 | E-ONE 1250-1500 GPM pump single stage. | $36,168 |

| Item No. | Description | |
|---|---|---|
| 4005-0143 | Hale DSD Pump 750/1500 GPM single stage | $23,265 |
| 4005-0150 | Hale MG Pump 500/1000 GPM single stage | $22,493 |
| 4005-0152 | Hale MG Pump 500/1000 GPM single stage | $19,032 |
| 4005-0154 | Hale QMAX-XS 1250-2250 GPM single stage pump. | $29,540 |
| 4005-0155 | Hale RME/RGA 3000gpm Pump for Rear Mount with (3) 6" Inlets. | $40,516 |
| 4005-0169 | Hale QMAX-XS R 1250-2250 GPM single stage pump. (R GEAR BOX) | $30,181 |
| 4005-0171 | Waterous CXVK 750-1250 single stage PTO Pump. | $24,825 |
| 4005-0172 | Waterous CS 750-1250 single stage pump. (With gear box to front IPOS) | $28,457 |
| 4005-0178 | Waterous S100 2000 GPM Pump with R gearbox. | $45,689 |
| 4005-0182 | Waterous CXVK 1250 GPM single stage pump with 150CFM CAFS | $66,602 |
| 4005-0185 | Hale CBP 250 GPM PTO pump. | $10,508 |
| 4005-0186 | Hale 8FG pump 2000 GPM for Bronto RLP. | $38,292 |
| 4005-0190 | Darley 1.5 AGH single stage hydraulically driven centrifugal pump. | $12,412 |
| 4005-0195 | Hale QFLO 750-1250 GPM pump single stage. Requires primer option. | $20,722 |
| 4005-0196 | Hale QMAX 1000-2250 GPM single stage pump. Requires primer option. | $25,534 |
| 4005-0197 | Hale QTWO 1500-2000 GPM two stage pump. Requires primer option. | $34,008 |
| 4005-0198 | Hale 8FGR 1500-2000 GPM Pump single stage. Requires dual primer option. | $38,877 |
| 4005-0199 | Hale 8FG single stage pump. For use with Industrial products. Requires dual primer option. | $34,796 |
| 4005-0200 | Waterous CS 750-1250 single stage pump. Requires primer option. | $21,857 |
| 4005-0201 | Waterous CSU 1500-2250 GPM single stage pump. Requires primer option. | $25,205 |
| 4005-0202 | Waterous CMU 1500-2250 GPM two stage pump. Requires primer option. | $39,841 |
| 4005-0203 | Waterous S100 2000 GPM Pump with R gearbox. Requires primer option. | $42,623 |
| 4005-0204 | E-ONE 1250-1500 GPM pump single stage. Requires primer option. | $33,252 |
| 4005-0207 | Hale 8FG pump 1500-2000 GPM for Bronto RLP. Requires primer option. | $35,274 |
| 4010-0195 | 300 gallon "T" water tank. UPF Poly III blue fill tower. | $5,178 |
| 4010-0196 | 400 gallon "T" water tank. UPF Poly III blue fill tower. | $6,663 |
| 4010-0197 | 450 gallon "T" water tank. UPF Poly III blue fill tower. Note: Any foam cell(s) will reduce the overall water capacity. | $6,971 |
| 4010-0198 | 500 gallon "T" water tank. UPF Poly III blue fill tower. | $7,275 |
| 4010-0199 | 280 gallon "T" water tank. UPF Poly III blue fill tower. Includes sleeve for ladder tunnel. | $6,435 |
| 4010-0200 | 250 gallon "T" water tank. UPF Poly III blue fill tower. Includes sleeve for ladder tunnel. | $6,435 |
| 4010-0201 | 490 gallon "T" water tank. UPF Poly III blue fill tower. Includes sleeve for ladder tunnel. | $8,532 |
| 4010-0202 | 480 gallon "T" water tank. UPF Poly III blue fill tower. Includes sleeve for ladder tunnel. | $8,532 |
| 4010-0203 | 475 gallon "T" water tank. UPF Poly III blue fill tower. Includes sleeve for ladder tunnel. | $8,532 |
| 4010-0204 | 450 gallon "T" water tank. UPF Poly III blue fill tower. Includes sleeve for ladder tunnel. | $8,532 |
| 4010-0205 | 430 gallon "T" water tank. UPF Poly III blue fill tower. Includes sleeve for ladder tunnel. | $8,532 |
| 4010-0206 | 320 Gallon "T" Water Tank Note: Any foam cell(s) will reduce the overall water capacity. Tank capacity is 320 US gallon / 266 Imperial gallons / 1211 Liters. | $5,178 |
| 4010-0228 | 560 gallon "T" water tank. UPF Poly III blue fill tower. Note: Any foam cell(s) will reduce the overall water capacity. | $7,886 |
| 4010-0270 | 500 gallon "T" water tank. UPF Poly III blue fill tower. Includes sleeve for ladder tunnel. | $8,532 |
| 4010-0272 | 330 gallon "T" water tank. UPF Poly III blue fill tower. | $5,690 |
| 4010-0277 | 200 Gallon "T" Water Tank UPF Poly III color fill towers. Note: Any foam cell(s) will reduce the overall water capacity. | $4,438 |
| 4010-0281 | 475 gallon "T" water tank. UPF Poly III blue fill tower. Includes sleeve for ladder tunnel. Note: Any foam cell(s) will reduce the overall water capacity. | $7,124 |
| 4010-0285 | 150 gallon "R" water tank. UPF Poly III blue fill tower. Foam tank capacity will reduce the water tank capacity. Tank capacity is 150 US gallon / 124 Imperial gallons / 568 Liters. | $3,452 |
| 4010-0291 | 300 gallon "T" water tank. UPF Poly III blue fill tower. Includes 4" diameter sleeve for rear discharge. Note: Any foam cell(s) will reduce the overall water capacity. | $5,807 |
| 4010-0295 | 270 gallon "T" water tank. UPF Poly III blue fill tower. | $4,663 |
| 4010-0313 | 500 gallon "T" water tank. UPF Poly III blue fill tower. Includes sleeve for 6" waterway pipe. | $8,532 |
| 4015-0002 | Mechanical speed counter for Hale pumps. | $324 |
| 4015-0007 | Pump cooler 1/4" valve with 3/8" tubing. | $171 |
| 4015-0008 | Zinc anodes for Hale pump (PR) (1) discharge side and (1) intake side. | $327 |
| 4015-0012 | Pump shift override side panel mounted. | $754 |
| 4015-0013 | Fire Research ThrottleXcel engine throttle. Includes engine gauges. | $1,610 |
| 4015-0014 | Thermal Relief Valve - Hale TRV120. | $842 |
| 4015-0015 | Valve relief system Hale TPM. | $3,765 |
| 4015-0016 | Thermal relief valve Hale TRVL-120. | $1,525 |
| 4015-0018 | Valve Inlet MIV-E - Hale. Location: [#LOC]. | $3,485 |

| Item No. | Description | |
|---|---|---|
| 4015-0019 | Valve inlet MIV-M Hale. Location: [#LOC]. | $2,989 |
| 4015-0020 | Valve Monarch Manual - Waterous. Location: [#LOC]. | $5,116 |
| 4015-0021 | Valve Monarch Air Actuated - Waterous. Location: [#LOC] | $5,550 |
| 4015-0022 | Mechanical pump seal - Hale. | $770 |
| 4015-0026 | Electronic speed counter for Waterous pumps. | $321 |
| 4015-0029 | Hale pressure relief valve. | $1,321 |
| 4015-0030 | Waterous pressure relief valve. | $1,476 |
| 4015-0031 | Valve Relief System - Dual TPM Required for pump rating 2250 GPM and above. | $4,455 |
| 4015-0033 | Hale 2-Stage Power Operated Transfer Valve. | $1,748 |
| 4015-0035 | Waterous 2-Stage electronic transfer valve. | $1,476 |
| 4015-0036 | 6" Additional Intake for 2250 GPM Pump. | $2,016 |
| 4015-0037 | Engine throttle vernier. | $368 |
| 4015-0039 | Pump seal mechanical for Waterous pump. | $725 |
| 4015-0041 | Valve Monarch Electric - Waterous. Location: [#LOC]. | $5,680 |
| 4015-0042 | Waterous Overheat Protection Manager. | $1,086 |
| 4015-0043 | Anodes for Hale CAFSPRO Pump (Pair) (1) Discharge side and (2) Intake Side. | $492 |
| 4015-0044 | Anodes for Waterous pump - (Pair) (1) discharge side and (1) intake side. | $397 |
| 4015-0045 | Throttle Selection Switch on Pump Operator's Panel for Back-Up of Relief and Throttle System. | $558 |
| 4015-0046 | Hale pump shift override. | $1,201 |
| 4015-0047 | Additional Hale Primer Valve. Located: [#LOC]. | $617 |
| 4015-0048 | Pump Shift Override - driver's side under running board forward of running board tray if applicable. | $754 |
| 4015-0049 | Extend Fire Pump Grease Zerks to Operator's Panel | $434 |
| 4015-0050 | Relocate Primer to the Outside of the Frame Rail on Driver's Side | $96 |
| 4015-0051 | Two 4.5" Steamers for Hale Qflo Pump | $769 |
| 4015-0054 | Additional Waterous Primer. Located: [#LOC]. | $1,383 |
| 4015-0055 | 6" Additional Intake for Industrial | $2,174 |
| 4015-0056 | Air operated master pump drain (upgrade). | $225 |
| 4015-0062 | Primer indicator light shall be provided on the pump operator's panel color to be red. | $118 |
| 4015-0063 | TPM Relief Valve outlet to be extended to the side of truck under runningboard or compartment. | $291 |
| 4015-0064 | Hale Auto Fill/Thief Inlet 2.5" Tank Fill "AutoFill" Automatic Tank Fill Valve Location: [#LOC]. | $4,437 |
| 4015-0065 | Schedule 40 stainless steel piping. | $1,227 |
| 4015-0066 | Trident Pump Primer W/3 Barrel Push Button Control. (In addition to standard.) | $1,097 |
| 4015-0068 | 6" intake valve Akron electric with relief. Location: [#LOC]. | $3,700 |
| 4015-0070 | WATEROUS OIL PRIMER | $74 |
| 4015-0071 | Valve Relief Thermal - Hale TRVL-120 W/Audible Alarm | $1,539 |
| 4015-0072 | 6" Intake Valve Elkhart Electric UBEC1 Control with Releif. Location: [#LOC] | $3,700 |
| 4015-0074 | Manual remote operated master pump drain. The master drain control shall be clearly marked and placed in accessible location on driver side pump panel. | $329 |
| 4015-0080 | 6" Cap Vented "IPOS" | $18 |
| 4015-0081 | Hale Semi-Automatic Priming push-button control. | $514 |
| 4015-0082 | Electric Over Air Actuation Pump Cooler Valve | $446 |
| 4015-0083 | Electric Over Air Actuation Engine Cooler Valve | $287 |
| 4015-0084 | Pump Air Blow Out with 1/4" Snubber Valve. | $256 |
| 4015-0085 | Auto Tank to Pump Operation. When Switched to Automatic Mode The Tank Valve will Close When Suction Pressure Reaches 15 PSI & Opens When Suction PressureI Drops Below 15 PSI. | $1,885 |
| 4015-0086 | Pump Cooler 1/4 Turn 3/8" Valve | $269 |
| 4015-0087 | Engine Cooler 1/4 Turn 3/8" Valve | $269 |
| 4015-0088 | Portable/Qmax Pump Shall be with Manifold and check valves for Front Bumper Turret and Ground Sweep. To be use dearing Pump&Roll operation. | $921 |
| 4015-0090 | Akron Test Port for Master Gauges | $98 |
| 4015-0091 | Pump cooler with .75" 1/4 turn valve. | $304 |
| 4015-0092 | Hale Fill Thieft Steamers to be Flush + 2 Location [#LOC] | $1,629 |
| 4015-0102 | Powder Coating Plumbing Components. Include all Stainless Steel Piping and Vic's applicable. With the exception of the smaller threadded components and Bronto supplieed parts. | $12,222 |
| 4015-0103 | Fuel cooler to have .375 tubing for a max of 20 GPM water flow. | $88 |
| 4015-0104 | Engine Cooler: E-One part number 629430; plumb with 1" control valve on pump panel and 1" ID low pressure hydraulic hose cooler. Install .375 ID restriction orifice in line to limit flow to between 45 and 50 GPM at 150PSI. | $3,660 |
| 4015-0105 | All Stainless Steel piping is to be constructed of 316L stainless steel. | $1,772 |

| Item No. | Description | |
|---|---|---|
| 4015-0106 | All flanges on plumbing larger that 2" shall have welded flanges where possible. Threaded connections are acceptable for 2" and smaller plumbing. | $1,213 |
| 4015-0107 | Plated or Stainless Steel fastners on all plumbing and the plumbing system. | $1,103 |
| 4015-0109 | Galvanized Victaulic Coupling. All Victaulic couplings shall galvanized. | $223 |
| 4015-0111 | Ferrell Compression Fittings for all Plastic Tubing in the Pump module plumbing. | $682 |
| 4015-0125 | Red Switch Cover on Master Drain Switch. | $14 |
| 4015-0126 | Hale PTO/MIDSHIP 250GPM to 1000gpm Pump Pressure Relief Valve | $2,334 |
| 4015-0127 | Fire Research Infinity vernier type engine throttle. | $706 |
| 4015-0129 | Waterous Overheat Protection Manager with audible alarm. | $1,020 |
| 4015-0130 | Additional Trident Primer Valve Located: [#LOC]. Requires aux air tank if connected to front or rear intake. | $371 |
| 4015-0131 | Hale Anode Pro Kit (3) Anodes with Flange. One on each suction tube and one anode on the discharge located as close to the center of the pump as possible. | $1,151 |
| 4015-0133 | Anode for Darley pump - (1) intake side. | $428 |
| 4015-0134 | Class 1 Engine Twister throttle vernier | $892 |
| 4015-0135 | Mechanical speed counter for pumps. | $395 |
| 4015-0139 | Darley Pump Overheat Thermal relief valve shall be provided with a light located on pump operator's panel. | $767 |
| 4015-0144 | Manual remote operated master pump drain. The master drain control shall be clearly marked and placed in accessible location rearward below running board on driver side or L1 compartment. | $329 |
| 4015-0146 | Four (4) 6.0'' diameter suction inlet ports with 6'' NST male threads and removable screens shall be provided on left side. | $2,174 |
| 4015-0149 | Four (4) 6.0'' diameter suction inlet ports with 6'' NST male threads and removable screens shall be provided two (2) left side and two (2) right side.. | $2,174 |
| 4015-0152 | Hale pump shift override. Pump shift to be recess behind pump operator pump panel with door. | $1,460 |
| 4015-0159 | Valve Inlet MIV-E - Hale. Location: [#LOC]. | $3,485 |
| 4015-0166 | Pump cooler automatic with 3/8" tubing. Include a check valve that is install between the pump discharge and tank that will automatically close when drafting. | $147 |
| 4015-0172 | Primer indicator light shall be provided on the pump operator's panel color to be red. The indicator light shall be upgraded to a LED indicator light IPOS. | $179 |
| 4015-0175 | Additional control and air bleeder for the MIV-E to provide controls at: [#LOC]. | $562 |
| 4015-0177 | Additional Anode for Darley pump. Location: Discharge side of pump. | $428 |
| 4015-0178 | Anodes for Waterous pump - (Three) (1) discharge side (1) intake side and (1) inside of tank. | $599 |
| 4015-0179 | Waterous Monarch Electric valve manual override control located on pump panel same side as Waterous intake valve is. | $397 |
| 4015-0180 | 6" Intake Akron Electric Valve and 9323 Controller with relief. Location: [#LOC]. | $3,700 |
| 4015-0181 | Pump cooler with .75" 1/4 lift lever turn valve. | $304 |
| 4015-0182 | Engine cooler with .75" 1/4 lift lever turn valve. | $304 |
| 4015-0183 | Test Port 1/4"  Drain Valve. | $82 |
| 4015-0186 | Trident Pump Primer W/3 Barrel Push Button Control. (In place of standard primer.)  Requires a 15.6 CFM or larger air compressor. | $212 |
| 4015-0187 | Anodes Pro System for Hale pump (QTY3) (1) discharge side and (2) intake side with one on each side of intake. | $637 |
| 4015-0188 | Red Switch Cover on rear dump valve switches. | $14 |
| 4015-0191 | Valve Monarch Electric - Waterous. Location:Front Intake with Elkhart Relief valve. | $4,974 |
| 4015-0193 | Hale 3" Auto Fill w/Thief Inlet. Locate: [#LOC]. | $6,463 |
| 4015-0204 | Trident Manually operated master pump drain. The master drain shall be clearly marked and placed in accessible location on pump panel. | $166 |
| 4015-0209 | Hale Fluid Primer IPOS. | $141 |
| 4015-0210 | Pump cooler with Innovative Control 1/4 turn valve with "T" handle and label. | $164 |
| 4015-0212 | Trident Automatic Pump Primer.(In place of standard primer.) | $887 |
| 4015-0214 | Additional Darley Primer Valve. Located: [#LOC]. | $1,003 |
| 4015-0221 | Additional 9323 electric controller for 6" intake electric valve. Location officer side pump panel. Include 1/4" air bleeder. | $1,339 |
| 4015-0222 | Waterous "H Manifold" shall be located on the left and right side pump. | $1,868 |
| 4015-0224 | Hale Pump Shift Override - driver's side under runningboard forward of runningboard tray. Pump shift to be flush with runingboard when is in gear. | $1,201 |
| 4015-0225 | Zinc anodes for Hale pump (3) (2) discharge side and (1) intake side. | $273 |
| 4015-0231 | Qmax Pump gear box to be "R" IPOS. | $836 |

| Item No. | Description | |
|---|---|---|
| 4015-0233 | Throttle Selection Switch on Pump Operator's Panel to be recess with cover. | $573 |
| 4015-0234 | Control for engine cooler. Includes Innovative Controls 1/4 turn valve with "T" handle and label. Requires engine cooler option. | $360 |
| 4015-0235 | Pump Shift Override - driver's side under running board rearward of running board tray if applicable. (Rod linkage in place of cable.) | $1,201 |
| 4015-0237 | Trident Automatic Pump Primer w/gauge. IPOS | $1,104 |
| 4015-0238 | Hale electric primer (oil-less). | $2,204 |
| 4015-0239 | Waterous electric primer (oil-less). | $2,253 |
| 4015-0241 | Trident primer W/2 barrel push button control. For use with up to 1000 GPM pumps. | $1,550 |
| 4015-0242 | Trident primer W/3 barrel push button control. For use with 1250 GPM and larger pumps. Requires 15.6 CFM or large engine air compressor. | $1,851 |
| 4015-0243 | Hale electric primer - dual (oil-less). | $4,045 |
| 4015-0248 | Pump Air Blow Out with Innovative Controls 1/4" valve w/1/4 turn handle. | $256 |
| 4015-0249 | Pump cooler Innovative Controls 3/4" include lift lever with ergonomic grip. | $304 |
| 4015-0251 | Zinc anodes for Hale pump (3) (1) discharge side and (2) in intake manifold side. | $273 |
| 4015-0252 | Hale Anode Pro Kit (3) Anodes with Flange. One on each suction tube and one anode on the discharge located as close to the center of the pump as possible. Display monitor location: Pump panel. | $1,151 |
| 4015-0253 | Hale Anode Pro Kit (3) Anodes with Flange. One on each suction tube and one anode on the discharge located as close to the center of the pump as possible. Display monitor location: Pump panel. | $1,151 |
| 4015-0254 | Flame Plated Impeller Hubs Waterous pump. | $718 |
| 4015-0255 | Pump 6" inlet both side shall be recess to allow room for a Akron 7983 piston valve to fit and not extend out pass the running boards. | $1,200 |
| 4015-0256 | Trident Automatic Pump Primer w/gauge. For use with 1250 GPM and larger pumps. Requires 15.6 CFM or large engine air compressor. | $2,388 |
| 4015-0257 | Waterous 6" Jamesbury Electric Inlet Valve. Location: [#LOC] | $5,369 |
| 4020-0001 | Additional tank sump. | $324 |
| 4020-0006 | Direct 1.0" Water Tank Fill with Akron Valve Terminate with .75 Hose Bib. Location: driver side pump panel | $816 |
| 4020-0014 | Water tank fill tower to be 6" wide x 17" long. Required on HP100/CR100/92RM with 2.5" tank fill. | $112 |
| 4020-0042 | Water tank notched at forward top face (overall tank capacity will be reduced). Notch along forward top face of tank for storage pan clearance. | $590 |
| 4020-0098 | Water tank notched for rear suction piping clearance. | $1,413 |
| 4020-0101 | Water tank notched at rear lower face (overall tank capacity will not be reduced). Notch along rear lower face of tank to accommodate clearance from aft body compartment. | $590 |
| 4100-0033 | 30 gallon integral foam tank for [#LOC]. UPF Poly III [#COL] fill tower. Foam tank capacity will reduce the water tank capacity. | $1,144 |
| 4100-0034 | 10 gallon integral foam tank for [#LOC]. UPF Poly III [#COL] fill tower. Foam tank capacity will reduce the water tank capacity. | $982 |
| 4100-0035 | 20 gallon integral foam tank for [#LOC]. UPF Poly III [#COL] fill tower. Foam tank capacity will reduce the water tank capacity. | $1,057 |
| 4100-0036 | 40 gallon integral foam tank for [#LOC]. UPF Poly III [#COL] fill tower. Foam tank capacity will reduce the water tank capacity. | $1,247 |
| 4100-0037 | 50 gallon integral foam tank for [#LOC]. UPF Poly III [#COL] fill tower. Foam tank capacity will reduce the water tank capacity. | $1,337 |
| 4100-0038 | 100 gallon integral foam tank for [#LOC]. UPF Poly III [#COL] fill tower. Foam tank capacity will reduce the water tank capacity. | $2,484 |
| 4100-0052 | 500 Gallon integral foam tank for [#LOC]. UPF Poly III [#COL] fill tower. The fill tower shall include a an expansion dome. Foam tank capacity will reduce the water tank capacity. Tank capacity is 500 US gallons / 416 Imperial gallons / 1892 Liters. | $7,686 |
| 4100-0053 | 30 Gallon external foam tank for [#LOC]. UPF Poly III [#COL]. Locate in storage pan. | $3,418 |
| 4100-0054 | 500 gallon "T" foam tank for class B foam. UPF Poly III Yellow fill tower. Foam tank capacity will reduce the water tank capacity. Tank capacity is 500 US gallons / 416 Imperial gallons / 1892 Liters. | $7,686 |
| 4100-0055 | 250 Gallon integral foam tank for [#LOC]. UPF Poly III [#COL] fill tower. The fill tower shall include an expansion dome. Foam tank capacity will reduce the water tank capacity. Tank capacity is 250 US gallons / 208 Imperial gallons / 946 Liters. | $3,900 |
| 4100-0058 | 25 gallon integral foam tank for [#LOC]. UPF Poly III [#COL] fill tower. Foam tank capacity will reduce the water tank capacity. | $1,136 |

| Item No. | Description | |
|---|---|---|
| 4100-0059 | 230 Gallon integral foam tank for [#LOC]. UPF Poly III [#COL] fill tower. The fill tower shall include an expansion dome. Foam tank capacity will reduce the water tank capacity. Tank capacity is 230 US gallons / 191 Imperial gallons / 870 Liters. | $4,304 |
| 4100-0062 | Label on Foam Tank to read "Class A Foam" or "Class B Foam" as necessary. | $30 |
| 4100-0064 | 30 Gallon external foam tank for [#LOC]. UPF Poly III [#COL] tower to be accessible from driver side. Includes bolt-on .187" diamond plate cover with end panel (if applicable) and cutout in top panel for fill tower. Locate in storage pan over pump offset to driver side. | $1,714 |
| 4100-0067 | 300 Gallon "T" foam tank for Class B foam. UPF Poly III Yellow fill tower. Tank capacity is 300 US gallons / 250 Imperial gallons / 1137 Liters. | $5,178 |
| 4100-0068 | 35 imperial gallon integral foam tank for [#LOC]. UPF Poly III [#COL] fill tower. Foam tank capacity will reduce the water tank capacity. Tank capacity is 42 US gallon / 35 Imperial gallons / 159 Liters. | $1,247 |
| 4100-0069 | 265 gallon integral foam tank for [#LOC]. UPF Poly III [#COL] fill tower. Foam tank capacity will reduce the water tank capacity. 265 US gal/220 Imperial gal/1003 liters | $4,304 |
| 4100-0070 | 200 gallon integral foam tank for [#LOC]. UPF Poly III [#COL] fill tower. Foam tank capacity will reduce the water tank capacity. | $3,075 |
| 4110-0002 | Foam tank (B) outlet. Includes 1" male adapter and connector (ship loose). Outlet location: [#LOC]. | $972 |
| 4110-0004 | Foam tank shutoff. 1/4 turn shut off on each connection to the foam tank - foam discharge refill and sending unit. The Valves shall be located at the tank. | $760 |
| 4110-0005 | Direct 1.5" Foam Tank Fill with Akron 1.5" Valve. A 1.5" FNST tank fill connection with rocker lug plug and a replaceable .25" mesh strainer on the left pump panel. | $767 |
| 4110-0006 | Foam tank outlet. Includes 1" male adaptor and connector (ship loose). Outlet location: [#LOC] | $971 |
| 4110-0009 | TTP 4" WILLIAMS FOAM SINGLE | $10,140 |
| 4110-0011 | 1.5" Foam tank drain Akron manual valve. | $710 |
| 4110-0013 | Foam tank outlet. Includes 1.5" MNST with cap. A 1.5" FNST fitting shall be included in the loose equipment . Outlet location: [#LOC]. | $1,065 |
| 4110-0014 | Foam tank (B) outlet. Includes 2" male adapter. Outlet location: [#LOC]. | $1,405 |
| 4110-0015 | Foam tank outlet. Includes 1" Female adaptor and connector (ship loose). Outlet location: [#LOC]. | $971 |
| 4110-0017 | Direct 1.5" Foam Tank Fill with Akron 1.5" Valve. A 1.5" FNST tank fill connection with rocker lug plug with a replaceable strainer on left side pump panel. | $767 |
| 4110-0019 | All foam service valves to be stainless steel IPOS. No PVC valves to be used. | $492 |
| 4110-0020 | Foam tank outlet. Includes 1" male camlock adaptor and connector (ship loose). Outlet location: (1)driver and (1) officer side pump panel. | $971 |
| 4405-0021 | Booster reel - front bumper. Center between frame rails. Will hold 100' of 1'' or 150' of 3/4'' booster hose. | $6,396 |
| 4405-0026 | Booster Reel Aluminum shall hold 100' of 1" or 150' of .75" Hose Reel installed in [#LOC]. A rewind switch shall be provided at the reel. | $2,742 |
| 4405-0053 | One (1) booster reel to hold 200` of .75" hose (not included)shall be provided. Includes rollers mounted on compartment door and foot mounted rewind switch below forward area of compartment. Locate R2. | $3,444 |
| 4405-0056 | Booster reel to hold up to 200' of .75" or 100' of 1" hose. Locate over L1 on compartment top offset forward. | $3,385 |
| 4405-0060 | Booster reel Akron Elect valve with a 9315 controller to read pressure only- Behind Front of Cab. Center between frame rails. To hold 100' of 1'' | $6,616 |
| 4405-0061 | Akron Booster reel - front bumper. Center between frame rails. Will hold 150' of 1'' or 250' of 3/4'' booster hose. | $6,838 |
| 4405-0076 | Booster Reel to hold up to 200' of .75" or 100' of 1" hose. Locate over R1 on compartment top offset forward. | $3,385 |
| 4405-0077 | Booster Hose Reel 12 Volt. Shall hold 200' of .75" Booster Hose (Hose not included) Includes stirrup style rewind switch below body. Reel Location: [#LOC] | $2,760 |
| 4405-0090 | Booster Reel with air actuated control at pump operator panel. Shall hold 200' of 1" Booster Hose (Hose not included) installed in [#LOC] | $2,638 |
| 4405-0095 | Booster Hose Reel 12 Volt located on the floor of B1. Shall hold 200' of .75" Booster Hose (Hose not included). Includes rewind switch officers side of B1 wall close to opening for easy accessability. | $2,760 |
| 4405-0096 | The booster reel manual crank shall have the crank handle extended an additional 12" beyond standard length. | $99 |

| Item No. | Description | |
|---|---|---|
| 4405-0098 | Booster Reel 100' X 1" or 150' x 0.75" hose (Hose not included) model EF4026-19-20-8. Located: [#LOC]. | $2,755 |
| 4405-0100 | Booster reel rewind switch. Switch located [#LOC]. | $120 |
| 4405-0113 | Booster Hose Reel 12 Volt located dunnage pan offset to officer side. Shall hold 200' of .75" Booster Hose (Hose not included). Includes rewind switch officers side pump panel. | $2,760 |
| 4405-0115 | Booster Reel. Reel to have capacity of 150' of 3/4" or 100' of 1" booster hose. Hose is sold seperately. Location: [#LOC]. | $2,760 |
| 4405-0121 | Akron Booster reel - front bumper. Center between frame rails. Will hold 150' of 1'' or 250' of 3/4'' booster hose. Include painted black Durabak cover and skid plate | $6,838 |
| 4405-0124 | Booster Reel to hold up to 200' of .75" or 100' of 1" hose. Includes rollers and foot mounted rewind switch (if applicable). Locate over R1/R2 on compartment top. | $3,385 |
| 4405-0130 | Booster Reel 100' X 1" or 150' x 0.75" hose (Hose not included) blow out valve included model EF4126-19-20-8. Located: [#LOC]. | $2,755 |
| 4405-0135 | Booster Reel w/2" Elkhart Electric Unibody Valve with UICS-2 CAFS Controller. Reel to have capacity of 200' of 1" (not included). Locate driver side of pan. | $5,711 |
| 4405-0139 | Booster reel with 200' of 1" red hose. Locate reel in driver side pan. Reel to be painted job color white. | $3,380 |
| 4405-0142 | Booster Reel with manual hand wheel control Akron valve. Reel to have capacity of 200' of 1" (not included). Locate [#LOC]. | $3,911 |
| 4410-0004 | Plumbing Package "A" RLP. Includes intake and discharge manifolds 6" intake valves 2.5" left intake 2.5" left discharge w/ integral droop 2.5" right discharge w/ integral droop 4" right discharge w/ integral droop 4" waterway discharge (2) 1.5" crosslays 2.5" crosslay 1.5" tank fill w/ 2" valve and 3" tank to pump. | $53,856 |
| 4410-0012 | Plumbing Package ''B'' RLP. Includes intake and discharge manifolds 6" intake valves 2.5" left intake 2.5" left discharge w/ integral droop 4" right discharge w/ integral droop 4" waterway discharge (2) 1.5" crosslays 2.5" crosslay 1.5" tank fill w/ 2" valve and 3" tank to pump. | $50,550 |
| 4410-0013 | Plumbing Package "A" RLP. Includes intake and discharge manifolds 6" intake valves 2.5" left intake 2.5" left discharge w/ integral droop 2.5" right discharge w/ integral droop 4" right discharge 4" waterway discharge (2) 1.5" crosslays 2.5" crosslay 1.5" tank fill w/ 2" valve and 3" tank to pump. | $53,856 |
| 4410-0036 | Plumbing Package "C" RLP. Includes intake and discharge manifolds. The 2.5" left discharge w/ integral droop 2.5" right discharge w/ integral droop 4" right discharge w/ integral droop 4" waterway discharge (2) 1.5" front bumper crosslays (1) 2.5" crosslay shall be 9315 electric controllers. The 6" intake valves 2.5" left intake 1.5" tank fill w/ 2" valve and 3" tank to pump Shall be 9313 Electric controllers. | $69,301 |
| 4410-0065 | Foam tank outlet. Includes 1" MNST adaptor with cap. Outlet location: [#LOC]. | $971 |
| 4415-0008 | 1.5" front bumper discharge Akron manual valve. | $1,598 |
| 4415-0009 | 1.5" Front Bumper Discharge Hale Manual Valve | $1,705 |
| 4415-0010 | 1.5" Front Bumper Discharge Akron Electric Valve | $3,298 |
| 4415-0011 | 2.5" Front Bumper Discharge Akron Electric Valve | $3,458 |
| 4415-0012 | 1.5" Crosslay with Akron manual valve. Location: [#LOC]. | $996 |
| 4415-0014 | 2.5" Left Pump Panel Discharge Akron Manual Valve. Location: [#LOC]. | $1,037 |
| 4415-0015 | 2.5" Left Panel Discharge Hale Manual Valve. Location: [#LOC] | $1,348 |
| 4415-0016 | 2.5" Right Pump Panel Discharge Akron Manual Valve. Location: [#LOC]. | $1,151 |
| 4415-0017 | 2.5" Right Pump Panel Discharge Hale Manual Valve. Location: [#LOC] | $1,462 |
| 4415-0018 | 2.5" left front hose bed discharge Akron manual valve. | $1,499 |
| 4415-0019 | 2.5" Left Front Hosebed Discharge Hale Manual Valve | $1,751 |
| 4415-0028 | 2.5" Right Rear Discharge Akron Manual Valve. Location: [#LOC]. | $1,212 |
| 4415-0029 | 2.5" Right Rear Discharge Hale Manual Valve Location: [#LOC] | $1,462 |
| 4415-0034 | 3" Right Pump Panel Discharge Akron Manual Valve (Waterous pumps noted location to be forward lower port). Location: [#LOC]. | $1,665 |
| 4415-0035 | 3" Right Pump Panel Discharge Hale Manual Valve Location: [#LOC] | $2,041 |
| 4415-0036 | 3" Left Front Hose Bed Discharge Akron Manual Valve. | $2,174 |
| 4415-0037 | 3" Right Front Hose Bed Discharge Akron Manual Valve. | $2,174 |
| 4415-0041 | 3" Deck Gun Discharge Akron manual valve. | $1,699 |
| 4415-0043 | 4" Deck Gun Discharge 6" Electric Elkhart Valve w/ Ratio Controller | $10,556 |
| 4415-0049 | 4" Pump Panel Discharge Hale Electric Valve Location: [#LOC] | $5,868 |
| 4415-0050 | 4" Pump Panel Discharge Akron Electric Valve (Waterous pumps noted location to be forward lower port). [#LOC] | $4,755 |
| 4415-0051 | 4" Waterway Discharge with 3" Akron Manual Valve. | $2,307 |
| 4415-0052 | 4" Waterway Discharge with 4" Akron Electric Valve | $4,756 |

| Item No. | Description | |
|---|---|---|
| 4415-0053 | 4" Waterway Discharge with 3" Akron Electric Valve | $3,976 |
| 4415-0054 | 4" Right Pump Panel Discharge with 3" Akron Manual Valve (Waterous pumps noted location to be forward lower port). Location: [#LOC]. | $1,958 |
| 4415-0057 | 5" Right Pump Panel Discharge with 3" Akron Manual Valve. Location: [#LOC]. | $2,715 |
| 4415-0058 | 2.5" Crosslay Akron Manual Valve. Location: [#LOC]. | $1,200 |
| 4415-0065 | 1.5" Double Speedlay with Akron Manual Valves. | $1,950 |
| 4415-0067 | 1.5" left front hose bed preconnect Akron manual valve. | $1,037 |
| 4415-0072 | 1.5" Right Rear Discharge Akron Manual Valve. Location: [#LOC]. | $1,093 |
| 4415-0073 | Triple Speedlay (2) 1.5" and (1) 2.5" with Akron Manual Valve. | $4,366 |
| 4415-0085 | 1.5" Crosslay w/2" Akron Electric Valve Location: [#LOC] | $2,899 |
| 4415-0086 | 2.5" Crosslay w/Akron Electric Valve. To be located rearward of 1.5" crosslay(s) if applicable. Location: [#LOC]. | $3,333 |
| 4415-0088 | 1.5" Crosslay w/2" Akron Electric Valve & Navigator 9305 Location: [#LOC] | $5,425 |
| 4415-0089 | 2.5" Crosslay w/Akron Electric Valve & Navigator 9305. To be located rearward of 1.5" crosslay(s) if applicable. Location: [#LOC] | $6,303 |
| 4415-0099 | 3" Deck Gun Discharge Akron Electric Valve | $3,907 |
| 4415-0100 | 3" Deck Gun Discharge Akron Electric Valve & Navigator 9305 | $6,956 |
| 4415-0102 | 1.5" Front Bumper Discharge Akron Electric Valve & Navigator 9305 | $6,054 |
| 4415-0104 | 2.5" Front Bumper Discharge Akron Electric Valve & Navigator 9315 | $7,028 |
| 4415-0106 | 1.5" Left Front Hosebed w/2" Akron Electric Valve | $2,965 |
| 4415-0107 | 2.5" Left Front Hosebed Akron Electric Valve | $3,636 |
| 4415-0109 | 1.5" Left Front Hosebed w/2" Akron Electric Valve & Navigator 9305 | $5,491 |
| 4415-0110 | 2.5" Left Front Hosebed Akron Electric Valve & Navigator 9305 | $6,687 |
| 4415-0124 | 2.5" Left Pump Panel Discharge Akron Electric Valve. Location: [#LOC] | $3,175 |
| 4415-0125 | 2.5" Left Pump Panel Discharge Akron Electric Valve & Navigator 9305. Location: [#LOC] | $6,227 |
| 4415-0127 | 2.5" Right Pump Panel Discharge Akron Electric Valve Location: [#LOC] | $3,175 |
| 4415-0128 | 3" Right Pump Panel Discharge Akron Electric Valve (Waterous pumps noted location to be forward lower port) Location: [#LOC] | $3,878 |
| 4415-0129 | 4" Right Pump Panel Discharge w/3" Akron Electric Valve (Waterous pumps noted location to be forward lower port) Location: [#LOC] | $4,171 |
| 4415-0130 | 5" Right Pump Panel Discharge w/3" Akron Electric Valve Location: [#LOC] | $4,926 |
| 4415-0131 | 2.5" Right Pump Panel Discharge Akron Electric Valve & Navigator 9305 Location: [#LOC] | $6,227 |
| 4415-0132 | 3" Right Pump Panel Discharge Akron Electric Valve & Navigator 9305 (Waterous pumps noted location to be forward lower port) Location: [#LOC] | $6,920 |
| 4415-0133 | 4" Pump Panel Discharge Akron Electric Valve & Navigator 9305 Location: [#LOC] | $8,396 |
| 4415-0134 | 4" Right Pump Panel Discharge w/3" Akron Electric Valve & Navigator 9305 Location: [#LOC] | $7,213 |
| 4415-0135 | 5" Right Pump Panel Discharge w/3" Akron Electric Valve & Navigator 9305 Location: [#LOC] | $7,970 |
| 4415-0149 | 1.5" Right Rear Discharge Akron Electric Valve Location: [#LOC] | $3,023 |
| 4415-0150 | 2.5" Right Rear Discharge Akron Electric Valve Location: [#LOC] | $3,350 |
| 4415-0152 | 1.5" Right Rear Discharge Akron Electric Valve & Navigator 9305 Location: [#LOC] | $5,550 |
| 4415-0153 | 2.5" Right Rear Discharge Akron Electric Valve & Navigator 9305 Location: [#LOC] | $6,400 |
| 4415-0161 | 2.5" Left Panel Discharge Akron Manual Valve w/30 Degree Chrome Droop. Location: [#LOC]. | $1,302 |
| 4415-0162 | 2.5" Left Panel Discharge Akron Electric Valve w/30 Degree Chrome Droop. Location: [#LOC]. | $3,442 |
| 4415-0163 | 2.5" Left Panel Dishcarge Akron Electric Valve & Navigator 9305 w/30 Degree Droop Location: [#LOC] | $6,492 |
| 4415-0164 | 2.5" Right Panel Discharge Akron Manual Valve w/30 Degree Chrome Droop. Location: [#LOC]. | $1,302 |
| 4415-0165 | 3" Right Panel Discharge Akron Manual Valve w/30 Degree Chrome Droop. (Waterous pumps noted if location is forward of steamer use lower discharge port.) Location: [#LOC]. | $1,989 |
| 4415-0166 | 2.5" Right Panel Discharge Akron Electric Valve w/30 Degree Chrome Droop Location: [#LOC] | $3,442 |
| 4415-0167 | 3" Right Panel Discharge Akron Electric Valve w/30 Degree Chrome Droop (Waterous pumps noted location to be forward lower port) Location: [#LOC] | $4,201 |
| 4415-0168 | 2.5" Right Panel Discharge Akron Electric Valve & Navigator 9305 w/30 Degree Droop Location: [#LOC] | $6,492 |
| 4415-0169 | 3" Right Panel Discharge Akron Electric Valve & Navigator 9305 w/30 Degree Droop (Waterous pumps noted location to be forward lower port) Location: [#LOC] | $7,245 |
| 4415-0171 | 3" Auxillary Waterway Discharge Akron Manual Valve. Plumbed from foam manifold and "Y" into w/way pipe downstream from main w/way discharge valve. | $1,239 |
| 4415-0172 | 2.5" Auxillary Waterway Discharge Akron Manual Valve. Plumbed from foam manifold and "Y" into w/way pipe downstream from main w/way discharge valve. | $1,166 |
| 4415-0179 | 2.5" Auxiliary Deck Gun Discharge Akron Valve for use with CAFS System.Plumbed from foam manifold and "Y" into Deck Gun pipe downstream from main Deck Gun discharge valve. | $2,017 |

| Item No. | Description | |
|---|---|---|
| 4415-0180 | 2.5" Auxillary Waterway Discharge Hale Manual Valve. Plumbed from foam manifold and "Y" into w/way pipe downstream from main w/way discharge valve. | $1,425 |
| 4415-0181 | 3" Auxillary waterway discharge Hale Manual Valve. Plumbed from foam manifold and "Y" into w/way pipe downstream from main w/way discharge valve. | $1,452 |
| 4415-0184 | 3" Deck Gun Discharge Hale Manual Valve | $1,907 |
| 4415-0187 | 1.5" Crosslay with Hale Manual Valve Location: [#LOC] | $1,916 |
| 4415-0189 | 2.5" Crosslay with Hale Manual Valve Location: [#LOC] | $2,583 |
| 4415-0192 | 4" Waterway Discharge with 3" Hale Manual Valve | $2,689 |
| 4415-0194 | 2.5" Front bumper discharge Akron manual valve. | $1,836 |
| 4415-0195 | 4" Right Pump Panel Discharge with 3" Hale Manual Valve Location: [#LOC] | $2,337 |
| 4415-0196 | 5" Right Pump Panel Discharge with 3" Hale Manual Valve Location: [#LOC] | $3,096 |
| 4415-0197 | 2.5" Left Panel Discharge Hale Manual Valve with Droop. Location: [#LOC] | $1,613 |
| 4415-0198 | 2.5" Right Pump Panel Discharge Hale Manual Valve with droop. Location: [#LOC] | $1,725 |
| 4415-0199 | 3" Right Pump Panel Discharge Hale Manual Valve with Droop Location: [#LOC] | $2,359 |
| 4415-0204 | 1.5" Crosslay with Hale Electric Valve Location: [#LOC] | $3,453 |
| 4415-0205 | 2.5" Crosslay with Hale Electric Valve Location: [#LOC] | $4,259 |
| 4415-0209 | 3" Deck Gun Discharge Hale Electric Valve | $4,207 |
| 4415-0210 | 2.5" Auxiliary Deck Gun Discharge Hale Valve for use with CAFS System | $4,316 |
| 4415-0211 | 2.5" Front Bumper Discharge Hale Manual Valve | $1,892 |
| 4415-0212 | 1.5" Front Bumper Discharge Hale Electric Valve | $3,243 |
| 4415-0213 | 2.5" Front Bumper Discharge Hale Electric Valve | $3,567 |
| 4415-0214 | 1.5" Left Front Hosebed Discharge Hale Manual Valve | $1,185 |
| 4415-0215 | 3" Left Front Hosebed Discharge Hale Manual Valve | $2,384 |
| 4415-0216 | 1.5" Left Front Hosebed Discharge Hale Electric Valve | $2,722 |
| 4415-0217 | 2.5" Left Front Hosebed Discharge Hale Electric Valve | $3,425 |
| 4415-0218 | 3" Left Front Hosebed Discharge Hale Electricl Valve | $4,683 |
| 4415-0227 | 2.5" Left Panel Discharge Hale Electric Valve. Location: [#LOC] | $3,022 |
| 4415-0228 | 2.5" Left Panel Discharge Hale Electric Valve with Droop. Location: [#LOC] | $3,285 |
| 4415-0232 | 2.5" Right Pump Panel Discharge Hale Electric Valve. Location: [#LOC] | $3,137 |
| 4415-0233 | 2.5" Right Pump Panel Discharge Hale Electric Valve with droop. Location: [#LOC] | $3,400 |
| 4415-0234 | 3" Right Pump Panel Discharge Hale Electric Valve Location: [#LOC] | $4,342 |
| 4415-0235 | 3" Right Pump Panel Discharge Hale Electric Valve with Droop Location: [#LOC] | $4,660 |
| 4415-0236 | 4" Right Pump Panel Discharge with 3" Hale Electric Valve Location: [#LOC] | $4,636 |
| 4415-0237 | 5" Right Pump Panel Discharge with 3" Hale Electric Valve Location: [#LOC] | $5,394 |
| 4415-0243 | 1.5" Right Rear Discharge Hale Manual Valve Location: [#LOC] | $1,202 |
| 4415-0244 | 3" Right Rear Discharge Hale Manual Valve Location: [#LOC] | $2,079 |
| 4415-0245 | 1.5" Right Rear Discharge Hale Electric Valve Location: [#LOC] | $2,740 |
| 4415-0246 | 2.5" Right Rear Discharge Hale Electric Valve Location: [#LOC] | $3,137 |
| 4415-0247 | 3" Right Rear Discharge Hale Electric Valve Location: [#LOC] | $4,380 |
| 4415-0248 | 1.5" Crosslay Elkhart Manual Valve Location: [#LOC]. | $1,051 |
| 4415-0249 | 2.5" Crosslay Elkhart Manual Valve. To be located rearward of 1.5" crosslay(s) if applicable. Location: [#LOC] | $1,351 |
| 4415-0250 | 1.5" Crosslay w/2" Elkhart Electric Valve Location: [#LOC] | $2,325 |
| 4415-0251 | 2.5" Crosslay w/Elkhart Electric Valve. To be located rearward of 1.5" crosslay(s) if applicable. Location: [#LOC] | $2,839 |
| 4415-0258 | 4" Waterway Discharge with 3" Hale Electric Valve | $4,608 |
| 4415-0259 | 4" Waterway Discharge with 4" Hale Electric Valve | $5,827 |
| 4415-0260 | 4" Waterway Discharge with 3" Elkhart Manual Valve | $2,532 |
| 4415-0261 | 4" Waterway Discharge with 3" Elkhart Electric Valve | $3,996 |
| 4415-0262 | 4" Waterway Discharge with 4" Elkhart Unibody Electric Valve | $6,032 |
| 4415-0263 | 3" Auxillary Waterway Discharge Elkhart Manual Valve. Plumbed from foam manifold and "Y" into w/way pipe downstream from main w/way discharge valve. | $1,461 |
| 4415-0264 | 2.5" Auxillary Waterway Discharge Elkhart Manual Valve. Plumbed from foam manifold and "Y" into w/way pipe downstream from main w/way discharge valve. | $1,321 |
| 4415-0265 | 3" Deck Gun Discharge Elkhart Manual Valve w/RC-10 Controller. | $1,922 |
| 4415-0266 | 3" Deck Gun Discharge Elkhart Electric Valve | $3,383 |
| 4415-0267 | 2.5" Auxiliary Deck Gun Discharge Elkhart Valve for use with CAFS System | $2,171 |
| 4415-0268 | 1.5" Front Bumper Discharge Elkhart Manual Valve | $1,680 |
| 4415-0269 | 2.5" Front Bumper Discharge Elkhart Manual Valve | $1,991 |
| 4415-0270 | 1.5" Front Bumper Discharge Elkhart Electric Valve | $2,951 |
| 4415-0272 | 1.5" Left Front Hosebed Preconnect Elkhart Manual Valve | $1,117 |

| Item No. | Description | |
|---|---|---|
| 4415-0273 | 2.5" Left Front Hosebed Discharge Elkhart Manual Valve | $1,651 |
| 4415-0274 | 3" Left Front Hosebed Discharge Elkhart Manual Valve | $2,400 |
| 4415-0275 | 1.5" Left Front Hosebed w/2" Elkhart Electric Valve | $2,389 |
| 4415-0276 | 2.5" Left Front Hosebed Elkhart Electric Valve | $3,137 |
| 4415-0280 | 3" Right Front Hosebed Discharge Elkhart Manual Valve | $2,400 |
| 4415-0285 | 4" Pump Panel Discharge Elkhart Electric Valve (Waterous pumps noted location to be forward lower port) Location: [#LOC]. | $4,960 |
| 4415-0286 | 5" Pump Panel Discharge with 4" Akron Electric Valve Location: [#LOC] | $5,420 |
| 4415-0287 | 5" Pump Panel Discharge with 4" Hale Electric Valve Location: [#LOC] | $6,492 |
| 4415-0288 | 5" Pump Panel Discharge with 4" Elkhart Electric Valve Location: [#LOC] | $5,626 |
| 4415-0289 | 2.5" Left Pump Panel Discharge Elkhart Manual Valve. Location: [#LOC] | $1,190 |
| 4415-0290 | 2.5" Left Panel Discharge Elkhart Manual Valve w/45 Degree Droop. Location: [#LOC]. | $1,456 |
| 4415-0292 | 2.5" Left Pump Panel Discharge Elkhart Electric Valve. Location: [#LOC] | $2,678 |
| 4415-0293 | 2.5" Left Panel Discharge Elkhart Electric Valve w/45 Degree Droop Location: [#LOC] | $2,943 |
| 4415-0299 | 2.5" Right Pump Panel Discharge Elkhart Manual Valve. Location: [#LOC]. | $1,302 |
| 4415-0300 | 2.5" Right Panel Discharge Elkhart Manual Valve w/45 Degree Droop. Location: [#LOC]. | $1,456 |
| 4415-0301 | 3" Right Pump Panel Discharge Elkhart Manual Valve Location: [#LOC] | $1,889 |
| 4415-0302 | 4" Right Pump Panel Discharge with 3" Elkhart Manual Valve w/RC-10 Control w/lights. Location: [#LOC]. | $2,181 |
| 4415-0303 | 5" Right Pump Panel Discharge with 3" Elkhart Unibody Manual Valve Location: [#LOC] | $2,939 |
| 4415-0304 | 2.5" Right Pump Panel Discharge Elkhart Electric Valve Location: [#LOC] | $2,791 |
| 4415-0305 | 2.5" Right Panel Discharge Elkhart Electric Valve w/45 Degree Droop Location: [#LOC] | $2,943 |
| 4415-0306 | 3" Right Pump Panel Discharge Elkhart Electric Valve Location: [#LOC] | $3,351 |
| 4415-0307 | 4" Right Pump Panel Discharge w/3" Elkhart Electric Valve (Waterous pumps noted location to be forward lower port) Location: [#LOC] | $3,645 |
| 4415-0308 | 5" Right Pump Panel Discharge w/3" Elkhart Electric Valve Location: [#LOC] | $4,400 |
| 4415-0315 | 1.5" Right Rear Discharge Elkhart Manual Valve Location: [#LOC] | $1,174 |
| 4415-0316 | 2.5" Right Rear Discharge Elkhart Manual Valve. Location: [#LOC]. | $1,365 |
| 4415-0318 | 1.5" Right Rear Discharge Elkhart Electric Valve Location: [#LOC] | $2,447 |
| 4415-0319 | 2.5" Right Rear Discharge Elkhart Electric Valve Location: [#LOC] | $2,850 |
| 4415-0370 | Second 1.5" Front Bumper Discharge Akron Manual Valve. | $1,598 |
| 4415-0371 | Second 1.5" Front Bumper Discharge Hale Manual Valve | $1,705 |
| 4415-0372 | Second 1.5" Front Bumper Discharge Akron Electric Valve | $3,298 |
| 4415-0373 | Second 2.5" Front Bumper Discharge Akron Electric Valve | $3,458 |
| 4415-0374 | Second 1.5" Front Bumper Discharge Akron Electric Valve & Navigator 9305 | $6,054 |
| 4415-0376 | Second 2.5" Front Bumper Discharge Akron Electric Valve & Navigator 9305 | $7,028 |
| 4415-0378 | Second 2.5" Front Bumper Discharge Akron Manual Valve | $1,836 |
| 4415-0379 | Second 2.5" Front Bumper Discharge Hale Manual Valve | $1,892 |
| 4415-0380 | Second 1.5" Front Bumper Discharge Hale Electric Valve | $3,243 |
| 4415-0381 | Second 2.5" Front Bumper Discharge Hale Electric Valve | $3,567 |
| 4415-0382 | Second 1.5" Front Bumper Discharge Elkhart Manual Valve | $1,680 |
| 4415-0383 | Second 2.5" Front Bumper Discharge Elkhart Manual Valve | $1,991 |
| 4415-0384 | Second 1.5" Front Bumper Discharge Elkhart Electric Valve | $2,951 |
| 4415-0385 | Second 2.5" Front Bumper Discharge Elkhart Electric Valve | $3,478 |
| 4415-0391 | 4" Deck Gun Discharge Akron Electric Valve. | $5,644 |
| 4415-0392 | 4" Deck Gun Discharge Hale Electric Valve | $6,684 |
| 4415-0397 | 4" Officer side discharge. Foward of steamer and includes 30 degree droop 4" Akron full flow valve with 4" driver side hand wheel control. | $3,912 |
| 4415-0399 | 1.5" Crosslay w/2" Akron Valve Handwheel Control Location: [#LOC] | $2,052 |
| 4415-0400 | 1.5" Crosslay w/2" Elkhart Valve Handwheel Control Location: [#LOC] | $2,103 |
| 4415-0401 | 2.5" Crosslay w/Akron Valve Handwheel Control. To be located rearward of 1.5" crosslay(s) if applicable. Location: [#LOC] | $2,254 |
| 4415-0402 | 2.5" Crosslay w/Elkhart Unibody Valve Handwheel Control. To be located rearward of 1.5" crosslay(s) if applicable. Location: [#LOC] | $2,304 |
| 4415-0403 | 3" Deck Gun Discharge Akron Valve Handwheel Control. | $2,753 |
| 4415-0404 | 3" Deck Gun Discharge Elkhart Valve Handwheel Control | $2,806 |
| 4415-0405 | 1.5" Front Bumper Discharge Akron Valve Handwheel Control | $2,655 |
| 4415-0406 | 1.5" Front Bumper Discharge Elkhart Unibody Valve Handwheel Control | $2,706 |
| 4415-0407 | 2.5" Front Bumper Discharge Akron Valve Handwheel Control | $2,892 |
| 4415-0408 | 2.5" Front Bumper Discharge Elkhart Valve Handwheel Control | $2,944 |
| 4415-0409 | 1.5" Left Front Hosebed Preconnect AkronValve Handwheel Control | $2,092 |

| Item No. | Description | |
|---|---|---|
| 4415-0410 | 1.5" Left Front Hosebed Preconnect Elkhart Valve Handwheel Control | $2,145 |
| 4415-0411 | 2.5" Left Front Hosebed Discharge Akron Valve Handwheel Control | $2,554 |
| 4415-0412 | 2.5" Left Front Hosebed Discharge Elkhart Valve Handwheel Control | $2,604 |
| 4415-0413 | 3" Left Front Hosebed Discharge Akron Valve Handwheel Control | $3,231 |
| 4415-0414 | 3" Left Front Hosebed Discharge Elkhart Valve Handwheel Control | $3,281 |
| 4415-0419 | 3" Right Front Hosebed Discharge Akron Valve Handwheel Control | $3,231 |
| 4415-0420 | 3" Right Front Hosebed Discharge Elkhart Valve Handwheel Control | $3,281 |
| 4415-0421 | 4" Pump Panel Discharge Akron Valve Handwheel Control. (Waterous pumps noted location to be forward lower port.) Location: [#LOC]. | $3,977 |
| 4415-0423 | 5" Right Pump Panel Discharge with 4" Akron Valve Handwheel Control | $4,644 |
| 4415-0424 | 5" Right Pump Panel Discharge with 4" Elkhart Valve Handwheel Control | $4,721 |
| 4415-0425 | 2.5" Right Pump Panel Discharge Akron Valve Handwheel Control. Location: [#LOC] | $2,207 |
| 4415-0426 | 2.5" Right Pump Panel Discharge Elkhart Valve Handwheel Control. Location: [#LOC] | $2,257 |
| 4415-0427 | 2.5" Right Panel Discharge Akron Valve Handwheel Control w/30 Degree Droop Location: [#LOC] | $2,358 |
| 4415-0428 | 2.5" Right Panel Discharge Elkhart Valve Handwheel Control w/30 Degree Droop Location: [#LOC] | $2,411 |
| 4415-0429 | 3" Right Pump Panel Discharge Akron Valve Handwheel Control (Waterous pumps noted location to be forward lower port). Location: [#LOC]. | $2,721 |
| 4415-0430 | 3" Right Pump Panel Discharge Elkhart Unibody Valve Handwheel Control Location: [#LOC] | $2,772 |
| 4415-0431 | 3" Right Panel Discharge Akron Valve Handwheel Control w/Droop. Location:(Waterous pumps noted location to be forward lower port) [#LOC]. | $3,045 |
| 4415-0432 | 4" Right Panel Discharge w/3" Akron Valve Handwheel Control. Location: [#LOC]. | $3,014 |
| 4415-0433 | 4" Right Panel Dischargew/3" Elkhart Unibody Valve Handwheel Control Location: [#LOC] | $3,065 |
| 4415-0434 | 5" Right Pump Panel Discharge with 3" Akron Valve Handwheel Control Location: [#LOC] | $3,770 |
| 4415-0435 | 5" Right Pump Panel Discharge with 3" Elkhart Valve Handwheel Control Location: [#LOC] | $3,821 |
| 4415-0443 | 1.5" Right Rear Discharge Akron Valve Handwheel Control Location: [#LOC] | $2,149 |
| 4415-0444 | 1.5" Right Rear Discharge Elkhart Valve Handwheel Control Location: [#LOC] | $2,199 |
| 4415-0445 | 2.5" Right Rear Discharge Akron Valve Handwheel Control Location: [#LOC] | $2,268 |
| 4415-0446 | 2.5" Right Rear Discharge Elkhart Unibody Valve Handwheel Control Location: [#LOC] | $2,317 |
| 4415-0451 | 4" Waterway Discharge with 3" Akron Valve Handwheel Control. | $3,362 |
| 4415-0452 | 4" Waterway Discharge with 3" Elkhart Valve Handwheel Control | $3,414 |
| 4415-0453 | 4" Waterway Discharge Akron Valve Handwheel Control | $3,978 |
| 4415-0455 | Second 1.5" Front Bumper Discharge Akron Valve Handwheel Control | $2,655 |
| 4415-0456 | Second 1.5" Front Bumper Discharge Elkhart Valve Handwheel Control | $2,706 |
| 4415-0457 | Second 2.5" Front Bumper Discharge Akron Valve Handwheel Control | $2,892 |
| 4415-0474 | 1.5" Right Discharge Akron Valve in Runningboard Hose Tray [#LOC]. | $1,037 |
| 4415-0489 | 2.5" Auxillary Waterway Discharge Akron Elect Valve. Plumbed from foam manifold and "Y" into w/way pipe downstream from main w/way discharge valve. | $3,510 |
| 4415-0491 | 2.5" Left Panel Discharge Elkhart Manual UnibodyValve w/30 Degree Chrome Droop. Location: [#LOC]. | $1,425 |
| 4415-0492 | 2.5" Right Panel Discharge Elkhart Manual UnibodyValve w/30 Degree Chrome Droop. Location: [#LOC]. | $1,452 |
| 4415-0493 | 1.5" Crosslay w/2" Elkhart Unibody Manual Valve. Location: [#LOC]. | $1,051 |
| 4415-0494 | 1.5" Crosslay w/2" Elkhart Unibody Electric Valve UBEC3 to read flow and pressure. Location: [#LOC] | $5,106 |
| 4415-0495 | 2.5" Right Panel Discharge Elkhart Hand Wheel Control UnibodyValve w/30 Degree Chrome Droop Location: [#LOC] | $2,334 |
| 4415-0496 | 3" Deck Gun Discharge Elkhart Unibody Valve Handwheel Control | $2,708 |
| 4415-0497 | 4" Pump Discharge Elkhart Electric UBEC3 Valve to read flow and pressure. Location: [#LOC] | $6,663 |
| 4415-0498 | 1.5" Right Rear Discharge Elkhart Electric UBEC3 Valve to read flow and pressure. Location: [#LOC] | $4,954 |
| 4415-0499 | 2.5" Right Rear Discharge Elkhart Electric UBEC3 Valve to read flow and pressure. Location: [#LOC] | $5,755 |
| 4415-0500 | 1.5" Front Bumper Crosslay Elkhart Electric UBEC3 Valve to read flow and pressure. | $5,252 |
| 4415-0502 | 1.5" Front Bumper Discharge Akron Manual Valve without Blowout | $1,598 |
| 4415-0504 | 2.5" Right Panel Discharge Elkhart Manual UnibodyValve Location: [#LOC] | $1,330 |
| 4415-0505 | 2.5" Left Panel Discharge Elkhart Manual UnibodyValve Location: [#LOC] | $1,301 |
| 4415-0506 | 2.5" Right Panel Discharge Elkhart Hand Wheel Control UnibodyValve Location: [#LOC] | $2,214 |
| 4415-0509 | 2.5" Auxillary Waterway Discharge Akron Hand Wheel Valve. Plumbed from foam manifold and "Y" into w/way pipe downstream from main w/way discharge valve. | $2,433 |

| Item No. | Description | |
|---|---|---|
| 4415-0514 | 4" Officer side discharge. Foward of steamer and includes 30 degree droop 4" Elkhart Elect Control full flow valve. | $5,138 |
| 4415-0515 | Front jumpline swivel to be recess so WYE valve will clear rise lid and tray. | $170 |
| 4415-0516 | 4" Right Panel Discharge w/ 3" Akron Valve Handwheel Control w/Droop Location: [#LOC] | $3,347 |
| 4415-0517 | 4" Right Pump Panel Discharge with 3" Akron Manual Valve w/Droop. Location: [#LOC]. | $2,283 |
| 4415-0518 | 4" Right Panel Discharge w/ 3" Akron Valve Electric w/Droop (Waterous pumps noted location to be forward lower port) Location: [#LOC] | $4,496 |
| 4415-0519 | 4" Right Pump Panel Discharge w/3" Akron Electric Valve & Navigator 9305 with 30 Degree Droop Location: [#LOC] | $7,539 |
| 4415-0520 | 4" Right Pump Panel Discharge with 3" Hale Manual Valve with 30 Degree Droop Location: [#LOC] | $2,661 |
| 4415-0523 | 5" Right Panel Discharge w/4" Elkhart Electric UBEC3 Valve to read flow and pressure. Location: [#LOC] | $6,957 |
| 4415-0524 | 3" Deck Gun Discharge Elkhart Unibody Manual Valve. | $1,915 |
| 4415-0525 | 1.5" Front Bumper Discharge Elkhart Unibody Manual Valve. | $1,680 |
| 4415-0527 | 1.5" Crosslay w/2" Elkhart Electric Unibody UBEC1 Valve Location: [#LOC] | $2,899 |
| 4415-0528 | 2.5" Left Pump Panel Discharge Elkhart Unibody Electric Valve. Location: [#LOC] | $3,175 |
| 4415-0529 | 3" Right Pump Panel Discharge Elkhart Unibody Electric Valve Location: [#LOC] | $3,878 |
| 4415-0530 | 4" Pump Panel Discharge Elkhart UBEC1 Electric Valve (Waterous pumps noted location to be forward lower port). Location: [#LOC]. | $4,755 |
| 4415-0531 | 4" Pump Panel Discharge Akron Electric Valve with 30 Degree Droop (Waterous pumps noted location to be forward lower port) Location: [#LOC] | $5,063 |
| 4415-0532 | 4" Waterway Discharge with 4" Elkhart Unibody Electric Valve | $4,756 |
| 4415-0536 | 5" Right Pump Panel Discharge with 4" Akron Valve Handwheel Control. Location: [#LOC]. | $3,996 |
| 4415-0537 | 2.5" Crosslay Elkhart Unibody Manual Valve. To be located rearward of 1.5" crosslay(s) if applicable. Location: [#LOC] | $1,411 |
| 4415-0541 | 3" Deck Gun Discharge Elkhart Unibody Manual Valve. | $1,806 |
| 4415-0545 | 5" Pump Panel Discharge with 4" Elkhart UBEC1 Electric Valve Location: [#LOC] | $5,626 |
| 4415-0546 | 4" Waterway Discharge with 3" Elkhart Unibody Valve Handwheel Control | $3,414 |
| 4415-0547 | 2.5" Front Bumper Discharge Elkhart Unibody Manual Valve | $1,991 |
| 4415-0548 | 3" Auxillary Waterway Discharge Elkhart Unibody Manual Valve. Plumbed from foam manifold and "Y" into w/way pipe downstream from main w/way discharge valve. | $1,228 |
| 4415-0549 | 1.5" Front Bumper Discharge Elkhart Electric UBEC1 Valve | $3,393 |
| 4415-0552 | 1.5" Front Bumper Crosslay Discharge Akron Manual Valve. | $2,244 |
| 4415-0553 | 2.5" Left Front Hosebed Discharge Akron Manual Valve located outlet shall be located 13.625" from inside hosebed wall. | $1,499 |
| 4415-0555 | 3" Deck Gun Discharge Akron Manual Valve with no Plumbing from the valve to deck gun channel Dealer to install Extend-A-Gun and Plumbing from the valve to the channel.. | $1,577 |
| 4415-0556 | 4" Waterway Discharge with 4" Akron Electric Valve & Navigator 9305 Control | $7,958 |
| 4415-0561 | 2.5" Left Panel Discharge Akron Electric Valve w/30 Degree Droop Location: [#LOC] | $3,442 |
| 4415-0562 | 3" Right Pump Panel Discharge Akron Electric Valve w/30degree Droop (Waterous pumps noted location to be forward lower port) Location: [#LOC] | $4,056 |
| 4415-0563 | 2.5" Right Panel Discharge Akron Electric Valve w/30 Degree Droop Location: [#LOC] | $3,442 |
| 4415-0564 | 3" Right Pump Panel Discharge Elkhart Electric Valve w/30degree Droop Location: [#LOC] | $4,056 |
| 4415-0565 | 4" Waterway Discharge with 5" Elkhart Electric Valve | $6,149 |
| 4415-0566 | 1.5" crosslay w/2" Akron electric valve. Location: [#LOC]. | $2,899 |
| 4415-0567 | 2.5" Crosslay w/Akron Electric Valve. To be located rearward of 1.5" crosslay(s) if applicable. Location: [#LOC]. | $3,333 |
| 4415-0568 | 3" deck gun discharge Akron electric valve. | $3,907 |
| 4415-0569 | 4" deck gun discharge Akron electric valve. | $5,644 |
| 4415-0570 | 1.5" Front Bumper Discharge Akron Electric Valve. | $3,298 |
| 4415-0571 | Second 1.5" Front Bumper Discharge Akron Electric Valve | $3,298 |
| 4415-0572 | 2.5" Front Bumper Discharge Akron Electric Valve | $3,458 |
| 4415-0573 | Second 2.5" Front Bumper Discharge Akron Electric Valve | $3,458 |
| 4415-0574 | 2.5" Left Pump Panel Discharge Akron Electric Valve. Location: [#LOC]. | $3,175 |
| 4415-0575 | 2.5" Left Panel Discharge Akron Electric Valve w/30 Degree Droop. Location: [#LOC]. | $3,175 |
| 4415-0576 | 4" Pump Panel Discharge Akron Electric Valve. (Waterous pumps noted location to be forward lower port.) Location: [#LOC]. | $4,755 |
| 4415-0577 | 5" Pump Panel Discharge with 4" Akron Electric Valve. Location: [#LOC]. | $5,420 |
| 4415-0582 | 1.5" Right Rear Discharge Akron Electric Valve Location: [#LOC] | $3,023 |
| 4415-0583 | 2.5" Right Rear Discharge Akron Electric Valve. Location: [#LOC]. | $3,350 |

| Item No. | Description | |
|---|---|---|
| 4415-0586 | 2.5" Right Pump Panel Discharge Akron Electric Valve. Location: [#LOC]. | $3,175 |
| 4415-0587 | 3" Right Pump Panel Discharge Akron Electric Valve. Location: [#LOC]. | $3,878 |
| 4415-0588 | 4" Right Pump Panel Discharge w/3" Akron Electric Valve (Waterous pumps noted location to be forward lower port) Location: [#LOC] | $4,171 |
| 4415-0589 | 5" Right Pump Panel Discharge w/3" Akron Electric Valve. Location: [#LOC]. | $4,926 |
| 4415-0590 | 2.5" Right Panel Discharge Akron Electric Valve w/30 Degree Droop. Location: [#LOC]. | $3,442 |
| 4415-0591 | 3" Right Panel Discharge Akron Electric Valve w/30 Degree Droop (Waterous pumps noted location to be forward lower port). Location: [#LOC]. | $4,201 |
| 4415-0592 | 4" Right Panel Discharge w/3" Akron valve electric w/droop (Waterous pumps noted location to be forward lower port). Location: [#LOC]. | $4,496 |
| 4415-0593 | 3" Right Pump Panel Discharge Akron Electric Valve w/30degree Droop (Waterous pumps noted location to be forward lower port) Location: [#LOC] | $4,056 |
| 4415-0594 | 2.5" Right Panel Discharge Akron Electric Valve w/30 Degree Droop Location: [#LOC] | $3,442 |
| 4415-0595 | 1.5" Left Front Hosebed w/2" Akron Electric Valve | $2,965 |
| 4415-0596 | 2.5" Left Front Hose Bed Akron Electric Valve. | $3,636 |
| 4415-0601 | 1.5" Crosslay w/2" Akron Electric Valve Location: [#LOC] | $2,899 |
| 4415-0612 | 4" waterway discharge with 3" Akron electric valve. | $3,976 |
| 4415-0613 | 4" waterway discharge with 4" Akron electric valve. | $4,756 |
| 4415-0617 | 2.5" Left Panel Discharge Akron Manual 3" Valve w/30 Degree Droop. Location: [#LOC]. | $1,665 |
| 4415-0618 | 2.5" Auxillary Deck Gun Discharge Manual Valve. Plumbed from foam manifold and "Y" into Deck Gun pipe downstream from main Deck Gun discharge valve. | $1,166 |
| 4415-0619 | 4" Right Pump Panel Discharge with 3" Akron Manual Valve. The 4" NST threads shall be a integral part of the valve. (Waterous pumps noted location to be forward lower port.) Location: [#LOC]. | $1,958 |
| 4415-0621 | 3" Left Front Hosebed Discharge Elkhart Unibody Manual Valve | $2,400 |
| 4415-0622 | 3" Right Front Hosebed Discharge Elkhart Unibody Manual Valve | $2,400 |
| 4415-0627 | 3" Deck Gun Discharge Elkhart Electric Unibody UBEC3Valve to read flow and pressure. | $5,983 |
| 4415-0629 | 2.5" Right Rear Discharge Elkhart Unibody Manual Valve Location: [#LOC] | $1,365 |
| 4415-0636 | 4" Right Pump Panel Discharge with 3" Elkhart Unibody Manual Valve. (Waterous pumps noted location to be forward lower port.) Location: [#LOC]. | $2,181 |
| 4415-0651 | 4" Waterway Discharge with 4" Akron Electric Valve with Digital Flow Meter. | $5,705 |
| 4415-0659 | 2.5" Left Pump Panel Discharge Elkhart Unibody Electric Valve with Droop. Location: [#LOC] | $3,305 |
| 4415-0662 | 3" Deck Gun Discharge Elkhart Electric Unibody Valve | $3,907 |
| 4415-0665 | 1.5" Front Bumper Discharge Akron Electric Valve & Navigator 9315 | $6,054 |
| 4415-0667 | 2.5" Left Panel Dishcarge Akron Electric Valve & Navigator 9315 w/30 Degree Droop Location: [#LOC] | $5,841 |
| 4415-0668 | 2.5" Right Panel Discharge Akron Electric Valve & Navigator 9315 w/30 Degree Droop Location: [#LOC] | $5,841 |
| 4415-0670 | 3" Right Panel Discharge Akron Electric Valve & Navigator 9315 w/30 Degree Droop (Waterous pumps noted location to be forward lower port) Location: [#LOC] | $6,804 |
| 4415-0719 | 3" Deck Gun Discharge Akron Electric Valve & Navigator 9315 | $6,956 |
| 4415-0722 | 3" Deck Gun Discharge Akron Electric Valve with a 9315 valve controller with pressure reading only. [#LOC] | $4,350 |
| 4415-0723 | 4" Discharge Akron Electric Valve & Navigator 9315 (Waterous pumps noted location to be forward lower port). Location: [#LOC]. | $8,396 |
| 4415-0724 | 4" Rear Mount Discharge w/3" Akron 9315 Electric Valve to read Flow and Pressure with 30 degree droop (Waterous pumps noted location to be forward lower port) Location: [#LOC] | $7,213 |
| 4415-0725 | 4" Rear Mount Discharge w/3" Akron 9315 Electric Valve to read Pressure (Waterous pumps noted location to be forward lower port) Location: [#LOC] | $4,116 |
| 4415-0726 | 1.5" Front Bumper Discharge Akron Electric Valve & Navigator 9315 with Pressue Reading only. | $3,693 |
| 4415-0727 | 1.5" Crosslay w/2" Akron Electric Valve & Navigator 9315 to Read Pressure only Location: [#LOC] | $3,437 |
| 4415-0728 | 2.5" Rear Mount Discharge Akron Electric Valve & Navigator 9315 to Read Pressure only. Location: [#LOC] | $3,605 |
| 4415-0731 | 2.5" Left Pump Panel Discharge UBEC3 Electric Valve with 30 degree droop to read flow and pressure. Location: [#LOC] | $5,723 |
| 4415-0732 | 2.5" Right Pump Panel Discharge UBEC3 Electric Valve with 30 degree droop to read flow and pressure. Location: [#LOC] | $5,723 |
| 4415-0733 | 4.5" Right Pump Panel Discharge with 3" Akron Manual Valve w/Droop Location: right side discharge 1 [#LOC] | $2,483 |
| 4415-0739 | 3" Right Pump Panel Discharge Elkhart Electric Valve w/30degree Droop to Terminate with 2.5" MNST w/cap Location: [#LOC] | $4,056 |

| Item No. | Description | |
|---|---|---|
| 4415-0747 | 4" Pump Panel Discharge Akron Electric Navigator 9315 Valve (Read Pressure only) Location: [#LOC] | $5,207 |
| 4415-0751 | 2.5" Crosslay Elkhart UBEC3 Electric Valve to read flow and pressure.. To be located rearward of 1.5" crosslay(s) if applicable. Location: [#LOC] | $5,592 |
| 4415-0752 | 4" Waterway Discharge with 4" Elkhart UBEC3 Valve to read flow and pressure. | $7,452 |
| 4415-0757 | 1.5" Front Bumper Discharge Elkhart Electric UBEC3 Valve to read flow and pressure. | $5,499 |
| 4415-0758 | Left Front Hosebed Discharge 2.5" Elkhart Unibody UBEC3 Valve to read flow and pressure. | $5,682 |
| 4415-0759 | Right Front Hosebed Discharge 2.5" Elkhart Unibody UBEC3 Valve to read flow and pressure. | $5,682 |
| 4415-0760 | 2.5" Front Bumper Discharge Akron Manual Valve without Blowout. | $1,836 |
| 4415-0762 | 4" Pump Panel Discharge Akron Electric Valve with 30 Degree Droop. Location: [#LOC]. | $5,063 |
| 4415-0767 | 2.5" Right Panel Discharge Akron Manual 3" Valve w/30 Degree Droop Location: [#LOC] | $1,665 |
| 4415-0771 | 4" Deck Gun Discharge Akron Electric Valve & Navigator 9315 | $7,051 |
| 4415-0772 | 4" Deck Gun Discharge Elkhart Electric Unibody Valve | $5,844 |
| 4415-0773 | 2.5" Right Pump Panel Discharge w/3" Elkhart Electric Unibody Valve and 30degree Droop [#LOC] | $4,056 |
| 4415-0777 | 2.5" Left Panel Discharge 3" Akron Electric 9315 Navigator Valve w/30 Degree Droop to Read Pressure and Flow Location: [#LOC] | $5,873 |
| 4415-0778 | 2.5" Crosslay w/Akron 3" Electric Valve & Navigator 9315 include 3" plumbing. To be located rearward of 1.5" crosslay(s) if applicable. Location: [#LOC] | $6,522 |
| 4415-0781 | 3" Right Pump Panel Discharge UBEC3 Electric Valve with 30 degree droop to read flow and pressure. Location: [#LOC] | $6,804 |
| 4415-0805 | 5" Left Pump Panel Discharge W/4" Akron Electric Navigator 9315 valve and controller. Include valve position display pressure and flow meter. [#LOC] | $8,477 |
| 4415-0806 | 5" Right Pump Panel Discharge W/4" Akron Electric Navigator 9315 valve and controller. Include valve position display pressure and flow meter. [#LOC] | $8,477 |
| 4415-0812 | Elkhart Unibody 2.5" foam system discharge with swing handle. For use with Williams Advent or Hot Shot foam systems. Locate to [#LOC]. | $1,146 |
| 4415-0820 | 5" Right Side Discharge 5" Akron Electric Valve. Locate: [#LOC]. | $5,466 |
| 4415-0834 | 4" Deck Gun Discharge Outlet with 6" Electric Elkhart Valve and plumbing. Require 4" Monitor | $6,206 |
| 4415-0835 | 4" Deck Gun Discharge Outlet with 6" Electric Akron Valve and plumbing. Requires 4" Monitor. | $6,206 |
| 4415-0842 | 5" Right Side Discharge 5" Elkhart Electric Valve. Locate: [#LOC] | $5,466 |
| 4415-0847 | Akron 635 Swivel with turning vane Located on Top of Bumper officer's side of center tray for Front Bumper Discharge | $174 |
| 4415-0849 | 5" Pump Panel Discharge 4" Akron Electric Valve & Navigator 9315 (Waterous pumps noted location to be forward lower port) Location: [#LOC] | $7,993 |
| 4415-0854 | 3" Left Rear Discharge Elkhart Electric Unibody Valve Location: [#LOC] | $3,517 |
| 4415-0855 | 3" Right Rear Discharge Elkhart Electric Unibody Valve Location: [#LOC] | $3,517 |
| 4415-0877 | 2.5" Crosslay Elkhart UBEC1 Electric Valve. To be located rearward of 1.5" crosslay(s) if applicable. Location: [#LOC] | $2,839 |
| 4415-0878 | 2.5" Right Panel Discharge Elkhart Unibody Electric Valve. Location: [#LOC] | $3,193 |
| 4415-0880 | 2.5" Left Panel Discharge with Elkhart Unibody Manual 3" Valve and 30 Degree Droop Location: [#LOC] | $1,665 |
| 4415-0883 | 6" Right Side Discharge 6" Akron Electric Valve. Locate: [#LOC]. | $6,181 |
| 4415-0889 | 2.5" Front Bumper Discharge Elkhart Electric UBEC3 Valve to read flow and pressure. | $5,716 |
| 4415-0892 | 3" Front Bumper Discharge Akron Manual Valve. Location; 3" front bumper discharge piped through the center of the center front bumper tray and to come out thru the front bumper. Piping to have a cover plate in tray. | $3,782 |
| 4415-0899 | 4" Waterway Discharge with 3" Elkhart Unibody Manual Valve | $2,532 |
| 4415-0900 | 5" Right Side Discharge 5" Akron Hydraulic activated Valve. Location: [#LOC] | $5,466 |
| 4415-0903 | 1.5" Front Bumper Crosslay Discharge Akron Manual Valve | $2,351 |
| 4415-0904 | 2" front bumper discharge Elkhart Electric valve. Include Elkhart electric valve plumbing and harness from the valve to joystick control located in cab console. Discharge to terminate and capped off just below the center of the bumper for dealer supplied and installed joystick and bumper turret. | $2,463 |
| 4415-0908 | 2.5" Rear Mount Discharge Akron Electric Valve & Navigator 9315 to Read Pressure only w/30 Degree Droop. Location: [#LOC] | $3,728 |
| 4415-0909 | 4" Waterway Discharge with 4" Akron Electric Valve & Navigator 9315 Control. (Waterway valve override must be accessible through right side pump panel from standing on the ground). | $7,958 |
| 4415-0912 | Second Left Front Hosebed 3" Elkhart Unibody manual Valve | $2,399 |
| 4415-0915 | 6" Waterway Discharge with 6" Akron Electric Valve. | $6,188 |
| 4415-0916 | 4" Deck Gun Discharge Akron Valve Handwheel Control. | $4,669 |

| Item No. | Description | |
|---|---|---|
| 4415-0918 | 1.5" Front Bumper Crosslay Discharge Elkhart Unibody Manual Valve | $2,244 |
| 4415-0919 | Deck gun monitor 3" Gemini manual hand wheel model 34700011 and nozzle 2.5" NH Excel model 51471000. | $3,543 |
| 4415-0920 | Left Front Hosebed Discharge 2.5" Elkhart Unibody UBEC1 Valve. | $3,136 |
| 4415-0921 | Right Front Hosebed Discharge 2.5" Elkhart Unibody UBEC1 Valve. | $3,136 |
| 4415-0923 | 4" Right Pump Panel Discharge with 3" Akron Manual Valve. Include a 4"FNST swivel x 4"MNST 30 degree droop adapter and cap. Location: [#LOC]. | $2,283 |
| 4415-0925 | All Discharge/Intake caps and plug to be Kochek brand and Powder coated. Color; White. | $608 |
| 4415-0931 | 2.5" Front Bumper Discharge Akron Electric Valve & Navigator Pro Controller 9325 with pressure read out. | $4,190 |
| 4415-0933 | 2.5" Right Panel Discharge Akron Electric Valve & Navigator Pro 9325 controller w/30 Degree Droop to Read Pressure. Location: [#LOC] | $4,175 |
| 4415-0934 | 2.5" Left Panel Discharge Akron Electric Valve & Navigator Pro 9325 controller w/30 Degree Droop to Read Pressure. Location: [#LOC] | $3,914 |
| 4415-0935 | 4" Right Pump Panel Discharge w/3" Akron Electric Valve & Navigator Pro 9325 with Pressure read out. (Waterous pumps noted location to be forward lower port) Location: [#LOC] | $5,202 |
| 4415-0936 | 4" Pump Panel Discharge Akron Electric Valve & Navigator 9325 to read flow and pressure w/30 degree droop. (Waterous pumps noted location to be forward lower port). Location: [#LOC]. | $6,010 |
| 4415-0937 | 3" Deck Gun Discharge Akron Electric Valve & Navigator read flow and pressure with 9325 controller. | $5,360 |
| 4415-0938 | 2.5" Left Pump Panel Discharge Akron Manual Valve. The discharge shall extend out beyond the pump panel w/Chrome plated finish. Location: [#LOC]. | $1,169 |
| 4415-0939 | 2.5" Right Pump Panel Discharge Akron Manual Valve. The discharge shall extend out beyond the pump panel w/Chrome plated finish. Location: [#LOC]. | $1,169 |
| 4415-0940 | 3" Right Pump Panel Discharge Akron Manual Valve. The discharge shall extend out beyond the pump panel w/Chrome plated finish. (Waterous pumps noted location to be forward lower port). Location: [#LOC]. | $1,797 |
| 4415-0941 | 4" Right Pump Panel Storz Discharge with 3" Akron Manual Valve. Include 3" FNST X 4" Storz 30 degree elbow adapter with cap. (Waterous pumps noted location to be forward lower port). Location: [#LOC]. | $2,494 |
| 4415-0942 | Left Rear Discharge 2.5" Elkhart Unibody electric valve with UICS-2 CAFS Controller. | $4,447 |
| 4415-0943 | 3" Deck Gun Discharge Akron Electric Valve & Navigator with 9323 controller. | $3,928 |
| 4415-0944 | 3" Right Panel Discharge Akron Electric Valve & Navigator 9325 w/30 Degree Droop (Waterous pumps noted location to be forward lower port) Location: [#LOC] | $5,324 |
| 4415-0945 | 1.5" Front Bumper Discharge Elkhart Electric Valve with UICS-2 CAFS Controller. | $4,703 |
| 4415-0946 | 1.5" Crosslay w/2" Elkhart Electric Unibody Valve with UICS-2 CAFS Controller. Location: [#LOC]. | $4,210 |
| 4415-0947 | 2.5" Right Panel Discharge Elkhart Unibody Electric Valve w/Droop and include UICS-2 CAFS Controller. Location: [#LOC]. | $4,614 |
| 4415-0948 | Preconnect extension (Each). The front hosebed preconnect to be extended to the rear of the hosebed area. Includes smooth plate cover. Location: [#LOC]. | $481 |
| 4415-0952 | 4" Deck Gun Discharge Outlet with 6" Electric Akron Valve and plumbing. Require 4" Monitor. Locate right rear. | $7,261 |
| 4415-0954 | 1.5" Front Bumper Discharge Akron Electric Valve & Navigator 9325 controller to read flow and pressure.. | $5,813 |
| 4415-0955 | 3" Deck Gun Discharge Akron Electric Valve with 9325 Navigator Controller to read flow and pressure. | $5,958 |
| 4415-0956 | 4" Right Rear Discharge Akron Electric Valve with 9325 Navigator controller to read flow and pressure. [#LOC]. | $7,880 |
| 4415-0959 | 3" Deck Gun Discharge Akron Electric Valve with 9325 Navigator Controller(to read pressure only). | $4,065 |
| 4415-0963 | One (1) pre-connect 1.5" adaptation to Storz. The pre-connect extension hose shall include an adapter to Storz and the pre-connect nozzle (sold separately in loose equipment) shall be supplied with a Storz adapter. | $197 |
| 4415-0965 | Left Front Hosebed Discharge 3" Akron Manual Valve and shall terminate with a 3"FNPT X 2.5"MNST adapter. | $2,190 |
| 4415-0966 | Right Front Hosebed Discharge 3" Akron Manual Valve and shall terminate with a 3"FNPT X 2.5"MNST adapter. | $2,190 |
| 4415-0967 | 1.5" Crosslay w/2.5" Akron Manual Valve and plumbing. Include 2.5" FNST X 1.5" MNST adapter. Location: [#LOC]. | $1,213 |

| Item No. | Description | |
|---|---|---|
| 4415-0969 | 2.5" left front hose bed discharge Akron manual valve. Locate discharge(s) approximately 26" up from hosebed floor. | $1,797 |
| 4415-0970 | 5" Right Pump Panel Discharge with 3" Akron Manual Valve w/Droop. Include a 3"FNST swivel x 5"Storz adapter and a 5"Storz x 4" Storz with cap. Location: [#LOC]. | $2,609 |
| 4415-0972 | 4" Right Pump Panel Storz Discharge with 4" Akron Electric Valve. Include 4" FNST X 4" Storz 30 degree elbow adapter with cap. (Waterous pumps noted location to be forward lower port). Location: [#LOC]. | $4,932 |
| 4415-0973 | 5" Right Pump Panel Storz Discharge with 3" Akron Manual Valve. Include 3" FNST X 5" Storz 30 degree elbow adapter with cap. (Waterous pumps noted location to be forward lower port). Location: [#LOC]. | $2,609 |
| 4415-0975 | 2.5" Front Bumper Crosslay Discharge Akron Electric Valve. | $3,458 |
| 4415-0977 | 2.5" Front Bumper Crosslay Discharge Akron Manual Valve. | $2,567 |
| 4415-0978 | 4" Waterway Discharge with 4" Akron Electric Valve & Navigator 9325 Control to read flow and pressure. | $5,453 |
| 4415-0980 | 6" Right Rear Discharge 6" Akron Electric Valve with 9323 controller. Locate: right rear discharge. | $6,287 |
| 4415-0981 | 6" Left Rear Discharge 6" Akron Electric Valve with 9323 controller. Locate: left rear discharge. | $6,287 |
| 4415-0982 | 6" Pump Panel Discharge 6" Akron Electric Valve with 9323 controller. Locate: [#LOC]. | $6,181 |
| 4415-0983 | 2.5" Right Pump Panel Discharge Akron Electric Valve with 9323 controller. Location: [#LOC]. | $3,175 |
| 4415-0984 | 2.5" Left Pump Panel Discharge Akron Electric Valve with 9323 controller. Location: [#LOC]. | $3,175 |
| 4415-0985 | 1.5" crosslay w/2" Akron electric valve and 9323 controller. Location: [#LOC]. | $2,899 |
| 4415-0986 | 4" Right Pump Panel Discharge w/4" Akron Electric Valve with 9323 controller. (Waterous pumps noted location to be forward lower port) Location: [#LOC] | $4,856 |
| 4415-0989 | Left Front Hosebed Discharge 3" w/ 3" Elkhart Unibody Manual Valve and shall terminate with a 3"FNPT X 2.5"MNST adapter. | $2,400 |
| 4415-0991 | 4" Pump Panel Discharge Akron Electric Valve & Navigator 9325 to read flow and pressure. (Waterous pumps noted location to be forward lower port). Location: [#LOC]. | $5,804 |
| 4415-0992 | 4" Pump Panel Discharge Akron Electric Valve & Navigator 9325 (Waterous pumps noted location to be forward lower port). Location:Left Side Discharge 1. | $8,412 |
| 4415-0994 | 4" waterway discharge with 4" Akron electric valve with 9323 controller. | $4,756 |
| 4415-0996 | 1.5" Front Bumper Discharge Akron Electric Valve with 9323 controller. | $3,298 |
| 4415-0999 | 4" Right Pump Panel Discharge w/3" Akron Electric Valve and 9323 controller. (Waterous pumps noted location to be forward lower port) Location: [#LOC] | $4,171 |
| 4415-1001 | 4" Right Panel Discharge w/30 Degree Droop. Include 4" Akron Electric Valve w/9323 Controller. (Waterous pumps noted location to be forward lower port) Location: [#LOC] | $5,071 |
| 4415-1003 | 1.5" Front Bumper Crosslay Discharge Elkhart Unibody Valve with hand wheel control. | $3,032 |
| 4415-1004 | 1.5" Double Speedlay with Elkhart Unibody Valves with hand wheel controls. | $4,463 |
| 4415-1005 | 2.5" Left Panel Discharge Elkhart Hand Wheel Control UnibodyValve w/30 Degree Droop Location: [#LOC] | $2,333 |
| 4415-1010 | 3" Right Panel Discharge Akron Electric Valve and 9323 Controller w/30 Degree Droop. (Waterous pumps noted location to be forward lower port). Location: [#LOC]. | $4,095 |
| 4415-1011 | 3" Right Pump Panel Discharge Akron Electric Valve. Location: [#LOC]. | $3,877 |
| 4415-1015 | 3" Right Pump Panel Discharge Akron Electric Valve with 9323 controller. Location: [#LOC]. | $3,877 |
| 4415-1016 | 4" waterway discharge with 3" Akron electric valve and 9323 controller. | $3,975 |
| 4415-1017 | 2.5" Front Bumper Discharge Akron Electric Valve with 9323 controller. | $3,458 |
| 4415-1018 | 2.5" Left Front Hose Bed Akron Electric Valve with 9323 controller. | $3,636 |
| 4415-1021 | 2.5" Left Pump Panel Discharge Akron Electric Valve with 9323 controller and 30 degree droop. Location: [#LOC]. | $3,543 |
| 4415-1022 | 2.5" Right Pump Panel Discharge Akron Electric Valve with 9323 controller and 30 degree droop. Location: [#LOC]. | $3,543 |
| 4415-1023 | 4" Deck Gun Discharge Outlet with 6" Electric Akron Valve and plumbing. Requires 4" Monitor. | $6,206 |
| 4415-1024 | 4" Right Pump Panel Discharge w/3" Akron Electric Valve and 9323 controller include 30 degree droop. (Waterous pumps noted location to be forward lower port) Location: [#LOC] | $4,495 |
| 4415-1025 | 5" Right Pump Panel Discharge w/3" Akron Electric Valve. Location: [#LOC]. | $4,926 |
| 4415-1026 | 5" Pump Panel Discharge with 4" Akron Electric Valve with 9323 controller. Location: [#LOC]. | $5,420 |
| 4415-1031 | 4" Deck Gun Discharge 6" Electric Akron Valve with 9323 controller and plumbing. Requires 4" Monitor. | $6,206 |
| 4415-1036 | 2.5" Right Pump Panel Discharge Akron Manual Valve to be used with Wetside - under tank design only. Location: [#LOC]. | $2,302 |
| 4415-1038 | 2.5" Right Pump Panel Discharge Akron Electric Valve to be used on Wetside with under tank design only. Location: [#LOC]. | $4,361 |

| Item No. | Description | |
|---|---|---|
| 4415-1040 | 1.5" Crosslay w/2.5" Elkart Unibody Manual Valve and plumbing Location: [#LOC] | $1,213 |
| 4415-1041 | 4" Pump Panel Discharge w/3" Akron Electric Valve & Navigator 9325 to read flow and pressure. (Waterous pumps noted location to be forward lower port). Location: [#LOC]. | $5,427 |
| 4415-1043 | 3" Deck Gun Discharge Elkhart Electric Unibody valve UBEC2 to pressure. | $4,622 |
| 4415-1044 | 3" Right Pump Panel Discharge UBEC2 Electric Valve with 30 degree droop to read pressure. Location: [#LOC] | $4,529 |
| 4415-1045 | Preconnect extension (Each). The front hosebed preconnect to be extended to the rear of the hosebed area. Includes smooth plate cover. Location: second officer side hose bed preconnect is to treminate approx 10" from back edge of hosebed. | $415 |
| 4415-1052 | 1.5" Preconnect Discharge Akron Electric Valve with 9325 controller with pressure reading only. Locate (1) L1 and (1) R1. | $3,708 |
| 4415-1054 | 2.5" Front Bumper Discharge Akron Manual Valve. Locate 2.5" discharge under front bumper on officer side center under officer side. | $1,836 |
| 4415-1055 | 2.5" Crosslay w/2.5" Elkhart Electric Unibody Valve with UICS-2 CAFS Controller with pressure reading. Location: [#LOC]. | $4,426 |
| 4415-1056 | 1.5" crosslay with Akron manual valve and no swivel. For use with discharges that locate below the hose beds. Location: [#LOC]. | $996 |
| 4415-1057 | 4" Left Rear Discharge 4" Elkhart Electric Unibody Valve. | $4,572 |
| 4415-1059 | Quad Speedlay (2) 1.5" / (2) 2.5" with Akron Manual Valves. | $4,342 |
| 4415-1060 | 2.5" Front Bumper Discharge Elkhart Electric Valve with UICS-2 CAFS Controller with pressure reading. | $4,808 |
| 4415-1063 | 2.5" Right Pump Panel Discharge Akron Manual Valve w/droop to be used with Wetside - under tank design only. Location: [#LOC]. | $2,583 |
| 4415-1068 | 1.5" Crosslay w/2" Akron Electric Valves with a Navigator 9325 controller. Include presure sensor for pressure read out only. Location: [#LOC]. | $3,653 |
| 4415-1070 | 2.5" Crosslay w/2.5" Akron Electric Valves with a Navigator 9325 controller. Include presure sensor for pressure read out only. Location: [#LOC]. | $3,995 |
| 4415-1071 | 1.5" Front Bumper Crosslay Discharge Akron Electric Valve with a Navigator 9325 controller. Include pressure sensor for pressure read out only. | $3,693 |
| 4415-1072 | 4" Pump Panel Discharge Akron Electric with a Navigator 9325 controller. Include presure sensor for pressure read out only. (Waterous pumps noted location to be forward lower port). Location: [#LOC]. | $5,580 |
| 4415-1074 | 4" Waterway Discharge with 5" Akron Electric Valve with 9325 controller. Include pressure sensor for pressure read out only. Location: pump module. | $6,468 |
| 4415-1076 | 2.5" Right Pump Panel Discharge Akron Electric Valve to be used on Wetside with under tank design only. Location: [#LOC]. | $4,361 |
| 4415-1077 | 2.5" Center Rear Discharge Akron Manual Valve. To terminate at rear of ladder tunnel opening centered. | $1,660 |
| 4415-1078 | 2.5" Right Pump Panel Discharge Waterous Manual Hand Wheel Valve. Locate discharge 2. | $3,349 |
| 4415-1079 | 2.5" Left Pump Panel Discharge Waterous Manual Hand Wheel Valve. Locate discharge 1 and 2. | $3,251 |
| 4415-1080 | 2.5" Left Front Hosebed Discharge Waterous Manual Hand Wheel Valve. Location: left front hosebed. | $3,501 |
| 4415-1081 | 2.5" Right Rear Discharge Waterous Manual Hand Wheel Valve. Location: right rear | $3,501 |
| 4415-1082 | 1.5" Crosslay w/2.5" Waterous Valve Handwheel Control. | $3,356 |
| 4415-1084 | 1.5" front bumper discharge Akron manual valve with chrome adapter through bumper. Location: Driver Side. | $1,697 |
| 4415-1085 | 4.5" Right Pump Panel Discharge with 3" Akron Manual Valve Location: [#LOC] | $2,291 |
| 4415-1086 | 4" Front Discharge w/4" Elect 9323 Akron Valve and Plumbed Thruogh Front Bumper. | $6,809 |
| 4415-1087 | 4" Left Pump Panel Discharge w/4" Akron Electric Valve with 9323 controller. (Waterous pumps noted location to be forward lower port) Location: [#LOC] | $4,856 |
| 4415-1090 | 4" Discharge with 4" Akron Electric valve. The discharge plumbing will be wye into the 5" rear intake plumbing. Where the rear intake can be utilized as a Intake or Discharge. | $4,633 |
| 4415-1091 | 2.5" Deck Gun Discharge Akron manual valve. | $1,668 |
| 4415-1094 | 3" Right Rear Discharge UBEC3 Electric Valve to read flow and pressure. Location: Right rear. | $6,804 |
| 4415-1095 | Triple Speedlay (2) 1.5" and (1) 2.5" with Akron valves hand wheel control. | $7,255 |
| 4415-1096 | 2.5" Crosslay Akron Manual Valve. For use with discharges that locate below the hose beds. Location: [#LOC]. | $1,200 |
| 4415-1099 | 4" Left Pump Panel Discharge w/4" Akron Electric Valve with 9323 controller. (Waterous pumps noted location to be forward lower port). [#LOC]. | $4,856 |

| Item No. | Description | |
|---|---|---|
| 4415-1100 | 1.5" Crosslay w/2" Akron Electric Valve with 9325 controller to Read Flow and Pressure. Location: [#LOC] | $3,803 |
| 4415-1101 | 2.5" Front Bumper Discharge Akron Electric Valve with 9325 controllerto Read Flow and Pressure. | $6,068 |
| 4415-1102 | 2.5" Right Panel Discharge Akron Electric Valve & Navigator Pro 9325 controller w/30 Degree Droop to Read Flow and Pressure. Location: [#LOC] | $4,968 |
| 4415-1103 | 2.5" Left Panel Discharge Akron Electric Valve & Navigator Pro 9325 controller w/30 Degree Droop to Read Flow and Pressure. Location: [#LOC] | $4,968 |
| 4415-1104 | 3" Front Bumper Discharge Akron Manual Valve. Location; Officer side with a fix 90 degree elbow on top of bumper.. | $3,639 |
| 4415-1106 | 1.5" Double Speedlay with Akron Valves with hand wheel controls. | $4,463 |
| 4415-1110 | 5" Right Pump Panel Discharge with 3" Akron Manual Valve. Include a 4"FNST swivel x 5" Storz 30 degree droop adapter and cap. Location: [#LOC]. | $2,476 |
| 4417-0019 | Fire Shop Bezel Chrome - Side Discharge/Intake | $98 |
| 4417-0026 | Automatic drain valve. For: [#LOC]. | $83 |
| 4417-0030 | Monitor Akron 3578 Electric 2000. | $10,112 |
| 4417-0031 | Monitor Akron 3570 Manual 2000 | $3,708 |
| 4417-0032 | Monitor Scorpion wireless RF radio 2000 GPM | $11,348 |
| 4417-0038 | Elkhart Model 8294-06 Monitor with SM-200E Nozzle. Wireless Remote control | $14,423 |
| 4417-0039 | Akron DeckMaster 3440 electric 1250 GPM monitor w/stow. | $11,781 |
| 4417-0040 | Akron 5177 Akromatic 2.5" master stream nozzle for an Akron 3440 DeckMaster monitor. | $1,799 |
| 4417-0041 | Akron 1577 SaberMaster 2.5" Nozzle for an Akron 3440 DeckMaster monitor. | $3,440 |
| 4417-0042 | An Akron tether remote control kit with a 30`cable shall be provided for an Akron monitor. Plug for the remote control to be located: [#LOC]. | $1,142 |
| 4417-0043 | Task Force Hurricane RC electric 1250 GPM monitor. | $13,263 |
| 4417-0044 | Task Force M-ERP-NJ 2.5" master stream electric nozzle for a Hurricane RC monitor. | $1,991 |
| 4417-0045 | Elkhart Stinger 8297-25 Manual 800gpm Monitor w/portable base and adapter to mount to deck gun discharge or extend-a-gun | $3,288 |
| 4417-0046 | Elkhart 8500 Vulcan RF monitor with panel mounted and hand held remote controls w/adapter to mount to deck gun discharge or extender. | $6,556 |
| 4417-0047 | Elkhart SM-1250E Select-O-Matic 2.5" electric nozzle. | $2,489 |
| 4417-0048 | Elkhart 8598 Electrically Actuated Extender. | $2,978 |
| 4417-0051 | Thread Type: All 1.5" discharges to be NPSH threads. All 2.5" inlets and discharges to be CSA (Ontario) threads as an integral part of the valve. | $652 |
| 4417-0052 | Extend Specified Hosebed Preconnect up to top of hosebed. Top of preconnect to be below top of hosebed. Location: [#LOC] | $417 |
| 4417-0054 | Preconnect extension (Each). The front hosebed preconnect to be extended to the rear of the hosebed area. Includes smooth plate cover. Location: [#LOC] | $415 |
| 4417-0057 | Ferrell Compression Fittings for all Discharge and Intake Bleeder Lines | $630 |
| 4417-0059 | Extend Specified Hosebed Preconnect up to mid-point of hosebed. Center of preconnect to be approximately center of hosebed height. Location: [#LOC] | $314 |
| 4417-0067 | Monitor 4" TFT Monsoon Manual with TFT Master Stream 2000 gpm manual Nozzle. | $6,613 |
| 4417-0068 | TFT Tether Kit with 30' Cable for an TFT Monitor Location: [#LOC] | $795 |
| 4417-0075 | Monitor 4" TFT Monsoon Electric with TFT Master Stream 2000 gpm electric Nozzle. Include panel mount and hand held Remote. | $14,935 |
| 4417-0077 | Adapter 3"FNST x 3.5" MNST with Cap. | $244 |
| 4417-0078 | Thread Type: All 1.5" discharges to be NPSH threads. All 2.5" inlets and discharges to be (Western Canada Fire Underwriters Association) threads as an integral part of the valve. | $847 |
| 4417-0079 | 9304 Akron Navitgator electric valve control. Location: All electric discharge valves IPOS. | $614 |
| 4417-0080 | All 1.5" Threads to be IPT threads | $72 |
| 4417-0081 | Vented caps and plugs for all discharges/intakes. | $598 |
| 4417-0083 | Elkhart 8297F Stinger RF Monitor with Panel Mounted and Hand-Held Remote Controls w/adapter to mount to deck gun discharge or extender | $9,330 |
| 4417-0085 | Thread Type: All 1.5" discharges to be NPSH threads. | $326 |
| 4417-0086 | Task Force Typhoon RC Electric Monitor with 1500gpm nozzle. Include Radio Remote Control | $13,980 |
| 4417-0088 | Bleeder drain valve plumbed to: [#LOC]. | $119 |
| 4417-0090 | Additional control for deck gun electric valve locate adjacent to the discharge outlet. | $1,772 |
| 4417-0092 | Task Force Typhoon RC Electric Monitor without nozzle. Include Radio Remote Control (Require Nozzle) | $11,220 |
| 4417-0099 | Akron Wireless Deck Gun Remote Monitor Controller. | $1,635 |
| 4417-0100 | Akron 3600 Wireless Remote Control. | $1,755 |

| Item No. | Description | |
|---|---|---|
| 4417-0102 | Akron DeckMaster 3440 Electric 1250gpm Monitor w/Stow. With 30' Tether controller located in pump panel operator compartment. | $12,395 |
| 4417-0118 | Discharge Elbow 3" 45Deg 3"FNPT X 2.5"MNST with cap. Location on rear discharge IPOS. | $197 |
| 4417-0119 | Task Force Hurricane RC Electric Monitor with a Master Stream 1250 GPM nozzle. Includes wireless Radio Remote Control. | $12,415 |
| 4417-0120 | Adapter Chrome Reducer 2.5"FNST x 1.5"MNST w/Cap. [#LOC]. | $98 |
| 4417-0127 | Chrome discharge elbow 3"FNST x 2.5"MNST 30 Deg [#LOC]. | $261 |
| 4417-0129 | Left side 2.5" pump panel discharges on Waterous pump to be side by side. For use with Side Mount Pump Module. | $830 |
| 4417-0130 | Task Force Tip Hurricane XFI-PLNJ Manual Monitor with MST-4NJ-2.5"NH Quad Stack Tips and M-R1000-NJ Automatic Nozzle. | $3,761 |
| 4417-0135 | Addition Automatic drain valve. For: front bumper discharge. Loction under front bumper at lowest point. | $83 |
| 4417-0138 | Officer side pump panel shall have polished stainless steel split escutcheon plates mounted in place for each discharge/intake. The escutcheon plates will be fastened in place to allow quick disassembly to permit the hinge to operate. | $248 |
| 4417-0147 | Special piping run for 2.5" bumper discharge. Run piping thru back wall of center tray down low offset to officer side (approximately 1" clearance between pipe and officer side tray wall) run piping into tray approx halfway then 90 degrees up to top of gravel shield. | $190 |
| 4417-0149 | Akron DeckMaster 3440 electric 1250 GPM monitor w/stow package. Include 1577 SaberMaster 2.5" Nozzle and 3600 Wireless Remote Control. (DND OF CANADA) | $14,693 |
| 4417-0150 | Manual override access hole to be supplied in officer's side pump panel to access the override on the 4" discharge .Wrench required for manual override shall be located in vicinity of access panel. | $86 |
| 4417-0153 | Elkhart Cobra EXM monitor with panel mounted and hand-held remote controls w/adapter to mount to deck gun discharge or extender. Include SM-1250E nozzle and EXM stow module. | $11,415 |
| 4417-0154 | Additional electric controller for discharge electric valve locate adjacent to the outlet. Locate.[#LOC]. | $1,772 |
| 4417-0158 | Deck Gun Discharge piping shall be extended flush with top of booster reels. | $266 |
| 4417-0159 | Monitor Scorpion 8294-02 Monitor w/2000 GPM Nozzle and ST-195 stacked tips (tips shipped loose). | $9,346 |
| 4417-0160 | Thread Type: All 1.5" discharges to be NEW CHICAGO FD 1.933 x 11 1/2 threads per inch. All 2.5" inlets and intake releif valve dump pipe to be 2.99 x 7 1/2 NEW CHICAGO FD threads per inch. | $549 |
| 4417-0162 | Akron DeckMaster 3440 UII CAN electric 1250 GPM monitor w/stow. | $11,781 |
| 4417-0163 | Additional control for deck gun valve handwheel control locate adjacent to discharge outlet. Hand wheel to be extended to top of pan. | $1,472 |
| 4417-0166 | Monitor 3" TFT Monsoon Electric with TFT Master Stream 1500 gpm electric Nozzle. Include panel mount and hand held Remote. | $11,704 |
| 4417-0171 | Deck Gun Pipe. The piping for the deck gun shall terminate with a 4 bolt flange. | $168 |
| 4417-0178 | Task Force Tip Hurricane Manual Monitor XFIH-D61A female NPT thread for use with Manual Extend-a-gun. | $1,607 |
| 4417-0179 | Task Force 2.5 Master Stream 1250 Series M-R1250-NJ Manual Nozzle | $1,414 |
| 4417-0180 | Task Force Tip Hurricane XFIH- Manual Monitor with MST-4NJ-2.5"NH Quad Stack Tips and M-R1250-NJ Automatic Nozzle. | $3,761 |
| 4417-0183 | Monitor Scorpion 8294-02 Monitor w/2000gpm Nozzle. | $9,135 |
| 4417-0185 | Innovative Controls discharge and intake bezels with integral color code and verbiage for side mount pump panel. | $497 |
| 4417-0186 | Innovative Controls discharge and intake bezels with color code and verbiage for top mount pump panel. | $320 |
| 4417-0192 | Innovative Controls discharge and intake bezels with integral color code and verbiage for rear mount pump panel. | $341 |
| 4417-0193 | Extend Driver Hosebed up 16" from hosebed floor. | $417 |
| 4417-0196 | Task Force Tip Hurricane XFIH-DL1A Manual Monitor with MST-4NJ-2.5"NH Quad Stack Tips and M-R1250-NJ Automatic Nozzle. | $4,070 |
| 4417-0197 | The crosslay preconnects shall be mounted vertical approximately 1" below the top of the pump module xlay when installed. Preconnect #1 will deploy off driver side and preconnect #2 will deploy off officer side. | $119 |
| 4417-0200 | Chrome discharge elbow 3"FNST x 2.5"MNST 45 Deg with cap. | $249 |
| 4417-0203 | Innovative Controls discharge and intake bezels with integral color code and verbiage for AP50 pump. | $124 |

| Item No. | Description | |
|---|---|---|
| 4417-0204 | Trident Hand Wheel Control.(In place of standard push/pull rod.): Location [#LOC]. | $1,034 |
| 4417-0206 | Innovative Controls 3/4" Bleeder drain valve plumbed to: direct/inlet tank fill. | $119 |
| 4417-0208 | Elkhart Cobra EXM monitor with panel mounted and hand-held remote controls w/adapter to mount to deck gun discharge or extender. Include ST-194 stack tips and EXM stow module. | $9,399 |
| 4417-0209 | Monitor Akron 3480 Electric StreamMaster II with 5178 2000gpm electric nozzle. | $12,640 |
| 4417-0213 | Discharge elbow 2.5"FNST x 2.5"MNST 45 Deg to be painted job color. | $249 |
| 4417-0216 | Superior style cable controls for side mount. | $261 |
| 4417-0220 | Akron 5075 Akromatic 2.5" master stream nozzle for an Akron 3440 DeckMaster monitor. | $1,799 |
| 4417-0221 | Thread Type: All 1.5" discharges to be NYFD threads. | $326 |
| 4417-0222 | Extend-a-Gun piping shall terminate with 4 bolt flange and be position in storage pan so it don't affect OAH w/8297 MONITOR. | $168 |
| 4417-0226 | A sensor shall be located at the monitor that signals the door ajar light in the cab to indicate that the monitor is raised. | $248 |
| 4417-0229 | The Akron electric controller to have Lexan guardr cover. (SEE PICTURE IN FILE) | $115 |
| 4417-0235 | Akron DeckMaster 3440 UII CAN electric 1250 GPM monitor w/stow. 1577 SaberMaste 1250gpm nozzle. | $14,265 |
| 4417-0238 | Trident 6" Hand Wheel Control.(In place of standard push/pull rod.): Location [#LOC]. | $1,226 |
| 4417-0239 | Rack and Sector Actuator Control.(In place of standard.): Location right side 2.5" discharge and left front hosebed. | $266 |
| 4417-0240 | Task Force Tip Hurricane XFIE-FLNJ Manual Monitor with MST-4NJ-2.5" NH and M-R1250-NJ Automatic Nozzle. | $3,377 |
| 4417-0241 | Akron Apollo (3433) High Rise Monitor. Include lift off and direct mount only. Include Hi-Riser direct mount base. | $3,909 |
| 4430-0008 | Advent 30 Foam System for a Single Foam Tank | $20,545 |
| 4430-0011 | 1600 Rockwood Around The Pump Foam System | $4,314 |
| 4430-0013 | Williams 1500 Around-The-Pump foam system. | $7,321 |
| 4430-0014 | Hale 2.1A FoamLogix foam system. | $7,272 |
| 4430-0015 | Hale 3.3 FoamLogix foam system. | $15,448 |
| 4430-0016 | 5.0 Hale FoamLogix Foam System. | $17,416 |
| 4430-0017 | 400 Rockwood around the pump foam system. | $3,250 |
| 4430-0018 | 1600 Hypro/FoamPro foam system. | $8,436 |
| 4430-0019 | 2001 Hypro/FoamPro foam system. | $13,700 |
| 4430-0020 | 2002 Hypro/FoamPro foam system. | $17,462 |
| 4430-0022 | Hot Shot II 150 Foam System. | $52,646 |
| 4430-0023 | Hot Shot II 300 Foam System | $56,019 |
| 4430-0031 | Eclipse Compressed Air Foam System 1000 GPM Manifold w/2002 FoamPro. | $81,505 |
| 4430-0039 | Eclipse Compressed Air Foam System 500 GPM Manifold w/2001 FoamPro | $76,002 |
| 4430-0041 | WATP 500 A/B Foam System Include 1.5" Foam pick up. | $10,012 |
| 4430-0042 | Advent 12 Foam System for a Single Foam Tank | $20,332 |
| 4430-0043 | Advent 12 Dual Foam System for Dual Foam Tanks | $22,322 |
| 4430-0045 | 95 GPM Akron Foam Eductor. Location: [#LOC]. | $2,233 |
| 4430-0046 | 125 GPM Elkhart Foam Eductor Location: [#LOC] | $2,784 |
| 4430-0047 | 125 GPM Akron foam eductor. Location: [#LOC]. | $2,551 |
| 4430-0048 | 95 GPM Elkhart Foam Eductor Location: [#LOC] | $2,540 |
| 4430-0052 | CAFSPRO with 3.3 Foam Logix Compressed Air Foam System with 750gpm Manifold | $61,342 |
| 4430-0053 | CAFSPRO with 5.0 Foam Logix Compressed Air Foam System with 750gpm Manifold | $62,385 |
| 4430-0056 | 125 GPM Elkhart Foam Eductor w/air actuated foam valve Location: [#LOC] | $3,360 |
| 4430-0057 | 125 GPM Akron Foam Eductor w/air actuated foam valve. Location: [#LOC]. | $2,990 |
| 4430-0058 | Hot Shift Clutch - Required with CAFS system | $3,044 |
| 4430-0059 | Eclipse Compressed Air Foam System 500 GPM Manifold w/2002 FoamPro. | $79,765 |
| 4430-0060 | CAFSPRO 5.0 FoamLogix Compressed Air Foam System with 1000 GPM manifold. | $64,077 |
| 4430-0061 | FoamPro 3012 foam system hydraulics PTO driven. | $23,234 |
| 4430-0066 | Foam Tank To Pump 1" Air/Act for Dealer install foam system. | $852 |
| 4430-0070 | 125 GPM Akron Simple Apparatus Foam System | $1,622 |
| 4430-0071 | 1500V Williams A/B Around The Pump foam system. Include A/B tanks control. | $9,007 |
| 4430-0073 | 1.5 Feecon Around The Pump Foam System | $4,385 |
| 4430-0075 | 2.0 Feecon Around The Pump Foam System | $4,513 |
| 4430-0076 | Eclipse Waterous Compressed Air Foam System 1000 GPM Manifold. | $64,046 |
| 4430-0077 | Waterous Advantus 6.0 Foam System | $19,600 |
| 4430-0078 | Classic 140 Compressed Air Foam System. Shall include (5) Discharge outlets (1) 2.5" Left Hosebed Preconnect Discharge (2) 1.5" Crosslay outlets and (2) booster reels. | $42,548 |

| Item No. | Description | |
|---|---|---|
| 4430-0079 | The foam system performance shall be tested and certified in compliance with the applicable NFPA 1901 requirements. | $294 |
| 4430-0080 | The balanced pressure foam system performance shall be tested and certified in compliance with 2009 NFPA 1901. | $585 |
| 4430-0081 | 1500 Williams Around The Pump Foam System Up Graded to 2000gpm at 3% | $2,856 |
| 4430-0090 | Hot Shot II 160-348 High Pressure Foam System. | $59,987 |
| 4430-0093 | Venom 5.0 Hypro/Foam Pro Foam System. | $17,905 |
| 4430-0094 | Advent 12 Elecrict (230) Dual Foam System for Dual Foam Tanks | $25,392 |
| 4430-0107 | WATP 500 B Foam System. Includes 1.5" Foam pick-up. | $8,422 |
| 4430-0109 | Waterous Advantus 3.0 foam system. | $14,252 |
| 4430-0112 | 125 GPM Akron Foam Eductor w/manual panel mount 1/4 turn foam valves (1) for A tank and (1) for B tank. Location: [#LOC] | $3,306 |
| 4430-0113 | The foam system shall be factory tested at minimum maximum and midrange. | $294 |
| 4430-0114 | Eclipse Compressed Air Foam System 3" Manifold w/Advantus 6.0 Foam system. | $75,334 |
| 4430-0115 | 125 GPM Akron foam eductor system with air actuation for both foam eductor and foam supply valve. Location: [#LOC]. | $3,754 |
| 4430-0117 | 1500V Williams A/B Around The Pump Foam System with Single Tank and Aux Pickup to be use for Class A or Class B foam inlet. | $9,567 |
| 4430-0120 | 1500V Williams Manual A/B Around The Pump foam system with pickup. Include manual A/B tanks control with manual .75 flush valve. | $9,060 |
| 4430-0122 | 1601 Hypro/FoamPro foam system. | $7,723 |
| 4430-0128 | Hale SmartCAFS 5.0 FoamLogix Compressed Air Foam System with 1000 GPM manifold. | $63,582 |
| 4430-0130 | Waterous 200-P PTO Platinum Compressed Air Foam System | $28,405 |
| 4430-0131 | Waterous 140-P PTO Platinum Compressed Air Foam System | $27,701 |
| 4430-0132 | Waterous 80-P PTO Platinum Compressed Air Foam System | $21,156 |
| 4430-0133 | Darley 150 ODIN Compressed Air Foam System. | $20,632 |
| 4430-0135 | 125 GPM Akron Foam Eductor w/manual panel mount 1/4 turn foam valves. Include push/pull for foam eductor Location: [#LOC] | $3,101 |
| 4430-0136 | Darley 150-PTO Compressed Air Foam System | $26,227 |
| 4430-0137 | 95 GPM Akron Foam Eductor Air Actuated. Plumb to both 1.5" preconnects. | $2,953 |
| 4430-0139 | 95 GPM Akron Foam Eductor w/air actuated foam valve. Location: [#LOC]. | $2,953 |
| 4430-0140 | Williams 1500 Around-The-Pump foam system. Include air actuated aux foam inlet valve IPOS control at operator panel. | $7,568 |
| 4430-0141 | Pyrolance Model B 200 M-G gasoline engine driven ultra high pressure system with 150' lenght of 3/4" hose with ultra high pressure pistol grip fog nozzle. Include plumbing to water and foam tank. | $38,504 |
| 4430-0142 | Advent 30 Foam System for a Single Foam Tank | $32,193 |
| 4430-0144 | 1.5 Feecon Around The Pump Foam System | $8,340 |
| 4430-0145 | FRC TurboFoam TFC400 foam system. Include FRC A/B Electric Selector. | $20,649 |
| 4430-0147 | Waterous One Step Compressed Air Foam System with Advantus 3.0 foam system. | $89,115 |
| 4430-0149 | 125 GPM Akron foam eductor system with air actuation foam eductor. Location: [#LOC]. | $3,644 |
| 4432-0001 | Akron 5178 Electric 2000 GPM Nozzle. | $2,348 |
| 4432-0002 | Akron 5070 Manual 2000 GPM Nozzle | $1,806 |
| 4432-0003 | Elkhart SM2000 Electric Nozzle | $2,334 |
| 4432-0009 | Hot Shot Ratio Controller 2" Discharge. Plumbed to: [#LOC]. | $2,151 |
| 4432-0010 | Hot Shot Ratio Controller 2.5" Discharge. Plumbed to: [#LOC]. | $2,214 |
| 4432-0011 | Hot Shot Ratio Controller 3" Discharge. Plumbed to: [#LOC]. | $2,285 |
| 4432-0012 | Advent Ratio Controller 2" Discharge. Plumbed to: [#LOC] | $1,761 |
| 4432-0013 | Advent Ratio Controller 2.5" Discharge. Plumbed to: [#LOC] | $1,764 |
| 4432-0014 | Advent Ratio Controller 3" Discharge. Plumbed to: [#LOC] | $1,790 |
| 4432-0015 | Advent Ratio Controller 4" Discharge. Plumbed to: [#LOC] | $1,983 |
| 4432-0016 | Advent Ratio Controller 5" Discharge. Plumbed to: [#LOC] | $3,615 |
| 4432-0019 | Foam Pro Remote Start Switch | $714 |
| 4432-0020 | Eclipse 1.5"/3.0" Compressed Air Foam System Discharge Kit. Location: [#LOC]. | $23 |
| 4432-0022 | 1.5" Compressed Air Foam System Discharge Kit Location: [#LOC] | $344 |
| 4432-0023 | 2.0" Compressed Air Foam System Discharge Kit. Location: [#LOC]. | $347 |
| 4432-0024 | 2.5" Compressed Air Foam System Discharge Kit. Location: [#LOC]. | $349 |
| 4432-0025 | 3.0" Compressed Air Foam System Discharge Kit Location: [#LOC] | $391 |
| 4432-0026 | 3" Deck Gun Discharge Eclipse Compressed Air Foam System | $3,819 |
| 4432-0027 | 3" Deck Gun Compressed Air Foam System | $4,148 |
| 4432-0036 | A/B Hypro/FoamPro manual foam selector. | $2,304 |

| Item No. | Description | |
|---|---|---|
| 4432-0037 | A/B Class 1 manual foam selector. | $3,326 |
| 4432-0045 | Hot Shift Clutch | $3,134 |
| 4432-0054 | Akron Quick Disconnect Foam Pickup Tube on Driver's Side Pump Panel for Eductor. Located on: [#LOC]. | $484 |
| 4432-0055 | Elkhart Quick Disconnect Foam Pickup Tube on Driver's Side Pump Panel for Eductor Located on: [#LOC] | $687 |
| 4432-0056 | Hale EZ-Fill foam system for a single foam tank. Includes clear hose wand (shipped loose). Controller and connection port located [#LOC]. | $2,831 |
| 4432-0057 | Hale EZ-Fill foam system for dual foam tank. Includes clear hose wand (ship loose). Controller and connection port located [#LOC]. | $3,194 |
| 4432-0058 | Akron quick-disconnect foam pickup tube on officer's side pump panel for eductor. Located on: [#LOC]. | $484 |
| 4432-0059 | Elkhart Quick Disconnect Foam Pickup Tube on Officer's Side Pump Panel for Eductor Located on: [#LOC] | $687 |
| 4432-0060 | Label for ATP foam systems. | $36 |
| 4432-0061 | FoamPro foam system refill. Includes clear hose wand (ship loose). Controller and connection port located [#LOC]. | $3,200 |
| 4432-0063 | Hale FoamLogix air actuated A/B selector. | $3,764 |
| 4432-0064 | Hypro FoamPro electric actuated A/B selector. | $3,533 |
| 4432-0065 | 3" Deck Gun CAFSPRO Compressed Air Foam System. | $6,615 |
| 4432-0066 | Additional 3/4" Foam Tank Valve for 95 Eductor and Dual Foam Cells | $467 |
| 4432-0070 | Hot Shot Ratio Controller 4" Discharge. Plumbed to: [#LOC]. | $3,048 |
| 4432-0074 | .375 Foam Maniflod Drain | $136 |
| 4432-0075 | FoamPro Advanced Digital Controller "auto start". | $139 |
| 4432-0077 | Foam Pickup 10 feet with 1.0 PVC Clear Spiraflex Hose IPOS | $244 |
| 4432-0078 | Foam tank drain plumbed to side panel with valve and 3/4" male garden hose connection. To allow filling of remote foam unit and pails from tank. | $875 |
| 4432-0079 | A/B Class 1 Manual Foam Selector | $3,326 |
| 4432-0080 | Special CAFS/FOAM Manifold for (4) preconnects Deck Gun and 3" Right Rear discharge. | $6,116 |
| 4432-0082 | Foam Pickup 2" on Side Pump Panel. With Manual valve and Pickup Tube. | $814 |
| 4432-0083 | Deck Gun Foam Tank To Pump Connection Provide a Manual 1.5" Valve Locate Next to Deck gun outlet. | $816 |
| 4432-0088 | 5" Discharge Right Side Electric Valve W/Ratio Controler for Hot Shot II System. Location: [#LOC] | $6,446 |
| 4432-0089 | CAFS Manual Air Valve to be .3/4" Valve in place of standard. | $141 |
| 4432-0090 | CAFS/Foam System Operation Label "Operate only (2) 1 3/4" Discharges or (1) 2 1/2" at a time" | $186 |
| 4432-0091 | Special design 5" foam/water manifold with check valves. | $3,894 |
| 4432-0093 | Hot Shot Ratio Controller 5". Plumbed to: [#LOC]. | $3,107 |
| 4432-0094 | Waterous Electric Actuated A/B Selector. | $3,380 |
| 4432-0097 | .75" Foam Manifold Drain with 1/4 turn valve. | $467 |
| 4432-0099 | Foam System Plumbed to [#LOC]. | $306 |
| 4432-0100 | 2.0" Compressed Air Foam System Discharge Kit with Electric actuated 1/2" valve. Location: [#LOC]. | $380 |
| 4432-0101 | 2.5" Compressed Air Foam System Discharge Kit with Electric actuated 3/4" valve. Location: [#LOC]. | $384 |
| 4432-0104 | Hale Manual Single Foam Flush System. | $1,178 |
| 4432-0105 | A/B Foam Selector locate Driver side walk way recess in box on diamond plate panel at front of module. | $178 |
| 4432-0106 | 15 GPM 12 volt Foam Transfer Pump mounted in vehicle body and switch operated from Officer's side pump panel. | $2,194 |
| 4432-0107 | 5" Discharge Right Side Electric Valve W/Ratio Controler for Hot Shot II System. Include Adjustable metering valve Location: [#LOC] | $6,446 |
| 4432-0108 | Hot Shot Ratio Controller 5" Discharge with adjustable metering valve. Plumbed to: [#LOC] | $3,107 |
| 4432-0109 | Hot Shot Ratio Controller 3" Discharge with adjustable metering valve. Plumbed to: [#LOC] | $2,285 |
| 4432-0110 | Hot Shot Ratio Controller 2" Discharge with adjustable metering valve. Plumbed to: [#LOC] | $2,151 |
| 4432-0111 | Install Foam Percentage Rivets in metering valves Precentage Plate. | $884 |
| 4432-0113 | Foam Intake Test Port Locate on the intake side of pump between the strainer and the pump bulkhead fitting is to be on operator pump panel. | $98 |
| 4432-0114 | Foam testing. The foam system shall be calibrated for 1 X 3 Thunderstrom foam AR-AFFF concentrate. The foam propotioning system shall provide .25% .5% 1% and 3% foam solutions within the allowable concentration ranges required in NFPA #1901. Each percentage shall be tested at a high and low flow and a revit shall be install at mid point.. | $2,098 |

| Item No. | Description | |
|---|---|---|
| 4432-0117 | 1.5" FNST Hydro- Foam Aux Foam pickup. The 1.5" FNST foam inlet fitting shall be located on officer side pump panel with a electic over air control valve. And be control at the operator panel. | $1,412 |
| 4432-0118 | Foam Strainer Pump Panel Mount with 1" connection ports and 2.5" NST cap. (IPOS strainer for foam system.) | $1,082 |
| 4432-0119 | Foam Strainer Pump Panel Mount with 1" connection ports and 2.5" NST cap. (For Foam Refill) | $1,082 |
| 4432-0120 | Special 5" FOAM Manifold for all discharge outlets to plumb to foam. | $3,312 |
| 4432-0121 | Foam Tank Supply/Flush 1" valves will be electric control operated through the V-MUX system. The flush valve to be located as close to foam tank supply valve as possible. A manual flush drain .75" valve will be located under the officer's side running board. | $1,059 |
| 4432-0122 | A 1.50" x 10' reinforced concentrate hose and stinger shall be provided with NST threads to connect to the foam inlet as (shipped loose) for auxiliary foam operations. | $287 |
| 4432-0123 | Eclipse 1.5"/3.0" Compressed Air Foam System Discharge Kit Location: [#LOC] | $548 |
| 4432-0125 | 6" Ratio Controller for Hot Shot II System. Include metering valve. Location: [#LOC]. | $3,992 |
| 4432-0129 | Hot Shot Ratio Controller 5" Discharge. Plumbed to: [#LOC]. | $4,116 |
| 4432-0134 | Eclipse 1.5"/3.0" Compressed Air Foam System Discharge Kit. Location: [#LOC]. | $306 |
| 4432-0135 | CAFS Audible w/light Low Air Alarm shall be tied into the CAFS air system. If it drop below 90PSI the alarm aviate. | $365 |
| 4432-0138 | Hot Shot Ratio Controller 2.5" Discharge with adjustable metering valve. Plumbed to: [#LOC] | $3,097 |
| 4432-0151 | FoamPro aux foam fill kit. Include check valve level sensor placard and camlok connection. | $748 |
| 4432-0152 | 1.5" Foam Tank to pump Electric/Air Actuated. With a guard switch cover adjacent to the foam control display. | $1,040 |
| 4432-0153 | CAFS system water drain shall be extended out to pump panel. | $237 |
| 4432-0159 | CAFs system drains shall be extended to the officer's side pump panel area. | $356 |
| 4432-0160 | 3" Compressed Air Foam System Discharge Kit with Electric actuated 3/4" valve. Location: [#LOC] | $444 |
| 4432-0161 | 1.5" Compressed Air Foam System Discharge Kit with Electric actuated 1/2" valve. Location: [#LOC] | $379 |
| 4432-0162 | 6" High Flow Ratio Controller for Hot Shot II System. Includes metering valve. Location: [#LOC]. | $3,991 |
| 4432-0163 | 1.5" Foam Tank to pump Air Actuated. With a guard switch cover adjacent to the foam control display. | $1,039 |
| 4432-0164 | Waterous Electric Actuated A/B Selector. A to be plumb to the foam tank and B to be plumb to the left pump panel for an aux foam pick-up. | $3,380 |
| 4432-0165 | Special design foam/water manifold to allow dealer supplied foam system to be plumbed to crosslay 1 crosslay 2 and rear discharge so they are foam ready. | $3,894 |
| 4432-0168 | Auto on power-up mode which automatically come on with pump in gear. | $139 |
| 4432-0169 | Advent Ratio Controller 2" Discharge. Special Orifice size .10 .250 .500 1.0 and 3.0% Plumbed to: [#LOC] | $1,761 |
| 4432-0170 | Advent Ratio Controller 2.5" Discharge. Special Orifice size .10 .250 .500 1.0 and 3.0% Plumbed to: [#LOC] | $1,764 |
| 4432-0171 | Advent Ratio Controller 3" Discharge. Special Orifice size .10 .250 .500 1.0 and 3.0% Plumbed to: [#LOC] | $1,790 |
| 4432-0172 | Advent Ratio Controller 4" Discharge. Special Orifice size .10 .250 .500 1.0 and 3.0% Plumbed to: [#LOC] | $1,983 |
| 4432-0173 | An Elkhart quick-connect foam outlet with pick-up tube assembly permits foam from on-board tank supply or to a 5 gal. pails/buckets. For portable eductor. Install one on each side pump panel. | $1,852 |
| 4432-0176 | A Elkhart quick-connect foam outlet with pick-up tube assembly permits foam from on-board tank supply or to a 5 gal. pails/buckets. For portable eductor. Location: [#LOC]. | $928 |
| 4432-0179 | A Elkhart quick-connect foam outlet with pick-up tube assembly permits foam from on-board tank supply or to a 5 gal. pails/buckets. For portable eductor. Location: [#LOC]. | $798 |
| 4432-0180 | Foam Flush with 1/4" valve. Locate inside driver side upper pump access door rearward. | $467 |
| 4432-0182 | Extended warranty for Waterous CAFS compressor - 4 Years in addition to the standard 1 year warranty (parts only). | $2,645 |
| 4432-0185 | Foam Flush System. | $112 |
| 4432-0187 | Addition Foam Flush System. A 3/4" valve with garden hose bib connection mounted in pump compartment (1) for 2002 and (1) for 3060 system. They will be plumb to the foam supply line for flushing of the system. A check valve prevents water from entering the foam tank when the system is not being flushed. | $430 |
| 4432-0189 | CAFS Compressor "Auto On". | $139 |

| Item No. | Description | |
|---|---|---|
| 4432-0190 | .75" Foam Manifold Drain with lift lever 1/4 turn valve. | $319 |
| 4432-0191 | FoamPro off-board pickup. Includes clear hose wand (ship loose). Controller on operator panel and connection port located [#LOC]. | $3,379 |
| 4432-0193 | Foam ready Manifold for a Hale Foam Logix or a Foam Pro system- plumbed to front jumpline bottom 1.75" speedlay and officer side 2.5" discharge. W/3" plumbing. | $1,997 |
| 4432-0196 | A CAFS Compressor RPM interlock indicator light and label shall be on the pump operator panel. Indicator light will come on when engine RPM is to high to engage CAFS PTO. | $78 |
| 4432-0198 | Dual discharge port "Y" togehter plumb to 4" foam loop feeding the foam manifold to prevent friction loss and to keep pump head pressure to a minimum. | $149 |
| 4432-0199 | Foam Metering valve shutoff. Each metering to have a electric/air foam shutoff valve control at pump operator panel in cab. A toggles switch with guarded cover and green indicator light for each valve. | $3,992 |
| 4432-0207 | Hale EZ-Fill foam system for a single foam tank with dual pickup (1) left and (1) right pump panel. Includes clear hose wand (shipped loose). Controller to be located on left pump panel. | $3,263 |
| 4432-0208 | Foam tank B outlet valve shall have rubber hood latch as a secondary lock. | $192 |
| 4432-0209 | CAFS Discharge Addition activated switch with a red guarded cover Location: Officer side front bumper adjacent to discharge. | $163 |
| 4432-0211 | All foam service/drain valves to be brass or stainless steel IPOS. No PVC valves to be used. | $492 |
| 4432-0212 | Foam tank outlet 1.5" plumbed to pan. Include 1.5" valve manual control with cam-lock fiiting and cap located in the pan off set to officer side rearward. (Dealer supply HYDRO foam nozzle. | $1,086 |
| 4435-0001 | Class 1 Intelli-Tank water tank level gauge. On pump panel. | $498 |
| 4435-0002 | Class 1 Intelli-Tank foam tank level gauge. On pump panel. | $515 |
| 4435-0003 | Class 1 Intelli-Tank/Whelen 500 LED water tank level gauge package. Location of Whelen 500 tank level lights: [#LOC]. | $4,026 |
| 4435-0004 | Sight Tube Water Tank Level Gauge. Located driver's side front of body. | $513 |
| 4435-0005 | Innovative Controls 5 Water Tank Level Gauge | $468 |
| 4435-0006 | Innovated Contols 5 Foam Tank Level Gauge | $731 |
| 4435-0007 | Class 1 Water Bar graph style Tank Level Gauge. | $782 |
| 4435-0008 | Class 1 foam Bar graph style Tank Level Gauge. | $1,037 |
| 4435-0009 | Fire Research TankVision model WL2600 Class A foam tank level gauge. | $963 |
| 4435-0010 | Fire Research TankVision model WL2000 water tank level gauge. | $838 |
| 4435-0011 | Fire Research TankVision model WL2700 B foam tank level gauge. | $962 |
| 4435-0012 | Pump overheat indicator. | $371 |
| 4435-0013 | 4.5" Class 1 compound pressure gauge (30-0-600 PSI). | $197 |
| 4435-0014 | Dual Read 4.5" Pressure Gauge (30-0-600 psi/100-0-4000 KPA). | $295 |
| 4435-0015 | 2.5" Class 1 compound pressure gauge (30-0-600). Discharge(s): [#LOC]. | $142 |
| 4435-0016 | Dual Read 2.5" Pressure Gauge (30-0-600 psi/100-0-4000 KPA). Discharge: [#LOC]. | $200 |
| 4435-0018 | Dual Read 3.5" Pressure Gauge (30-0-600 psi/100-0-4000 KPA). Discharge: [#LOC] | $271 |
| 4435-0019 | 3.5" Class 1 compound pressure gauge (30-0-600). Discharge: [#LOC]. | $170 |
| 4435-0020 | MC Products gauge heater line controls and strips for 4 gauges. | $757 |
| 4435-0021 | Gauge heater strips additional (EA). | $145 |
| 4435-0022 | 6" NoShok pressure gauge (30-0-600). | $687 |
| 4435-0023 | 4" NoShok master pressure gauges (30-0-600). | $210 |
| 4435-0024 | 6" Class 1 compound pressure gauge (30-0-600). | $677 |
| 4435-0025 | Flowminder Super System. Discharge: [#LOC]. | $2,796 |
| 4435-0026 | Flowminder System. Discharge: [#LOC]. | $1,808 |
| 4435-0027 | Flow Meter Value System. Discharge: [#LOC]. | $1,660 |
| 4435-0030 | Transmission temperature gauge. | $256 |
| 4435-0031 | Pump hourmeter on pump operator's panel. | $159 |
| 4435-0033 | Ammeter gauge on pump operator's panel. | $291 |
| 4435-0034 | Fuel level gauge on pump operator's panel. | $351 |
| 4435-0035 | Enfo III System on Pump Operator's Panel | $1,060 |
| 4435-0036 | Engine gauge package at the pump operator's panel. | $734 |
| 4435-0038 | Class 1 Engine Status Center on Pump Operator's Panel | $1,740 |
| 4435-0040 | FRC Tachplus engine monitoring display. | $1,427 |
| 4435-0047 | Class 1 Intelli-Tank water tank level gauge additional. Location: [#LOC]. | $572 |
| 4435-0049 | Class 1 tank level water LED graph gauge additional. Location: [#LOC]. | $782 |
| 4435-0050 | FRC Tank Level Water TankVision Gauge Additional. Location: [#LOC]. | $533 |
| 4435-0051 | Innovated Controls 5 Light Tank Level Water Gauge Additional Location: [#LOC] | $699 |

| Item No. | Description | |
|---|---|---|
| 4435-0052 | Class 1 Tank Level Water Mini Gauge Additional. Location: [#LOC]. | $523 |
| 4435-0053 | FRC Tank Level Water TankVision model WLA205-A00 Mini Gauge. Location: [#LOC]. | $398 |
| 4435-0054 | Innovative Controls 5 Light Tank Level Water Mini Gauge. Location: [#LOC]. | $546 |
| 4435-0055 | Class 1 Tank Level Intelli Foam Gauge Additional. Location: [#LOC]. | $572 |
| 4435-0056 | Class 1 Tank Level Foam Mini Gauge Additional Location: [#LOC] | $523 |
| 4435-0057 | FRC Tank Level A Foam Tank Vision model WLA265-A00 Mini Gauge Additional. Location: [#LOC]. | $477 |
| 4435-0058 | FRC Tank Level B Foam Tank Vision model WLA205-A00 Mini Gauge Location: [#LOC] | $477 |
| 4435-0059 | Innovated Controls Tank Level Foam Mini Gauge Additional Location: [#LOC] | $546 |
| 4435-0063 | Duplex Master Gauge for CAFS or Industrial Foam Systems. | $529 |
| 4435-0064 | FRC Insight Ultimate model FPA400 combination pressure/flow gauge. Location: [#LOC]. | $2,107 |
| 4435-0065 | 2.5" NoShok pressure gauge (30-0-600). For: [#LOC]. | $153 |
| 4435-0066 | IC5/Whelen 500 Water Tank Level Gauge Package Location of Whelen 500 Tank Level Lights: [#LOC] | $3,997 |
| 4435-0067 | Class 1/Whelen PSTank Water Tank Level Gauge Package. Location of Whelen PSTank Strip-Lights: [#LOC]. | $1,897 |
| 4435-0068 | IC5/Whelen PSTank Water Tank Level Gauge Package Location of Whelen PSTank Strip-Lights: [#LOC] | $1,867 |
| 4435-0069 | Class 1 ENFO IV system on pump operator's panel. | $949 |
| 4435-0070 | Fire Research TankVision model WL2600 Class A and WL2700 Class B foam tank level gauges. | $1,918 |
| 4435-0071 | FRC Tank Vision model WLA205-A00 Tank Level A and B Foam Gauges Location: [#LOC] | $949 |
| 4435-0072 | Fire Research Tank Vision Water Tank Level Gauge with Automatic Tank Filling System model ATA400 Location: [#LOC] | $2,933 |
| 4435-0074 | FRC Water Tank Level Gauge with Driver for Spartan Chassis only. | $1,115 |
| 4435-0076 | Ashcroft 3.5" dry discharge gauges. Provide for each discharge. | $1,483 |
| 4435-0083 | Innovative Controls 10 LED SL series water tank level gauge. On pump panel. | $510 |
| 4435-0084 | Innovative Controls 10 LED series foam tank level gauge. On pump panel. | $731 |
| 4435-0085 | Innovative Controls 10 LED SL series tank level water gauge additional. Location: [#LOC]. | $699 |
| 4435-0086 | Innovative Controls 10 LED series Tank Level Water Mini Gauge. Location: [#LOC]. | $546 |
| 4435-0087 | Innovative Controls IC 10 LED SL series Tank Level Foam Mini Gauge Additional. Location: [#LOC]. | $546 |
| 4435-0088 | IC 10 LED SL series/Whelen 500 water tank level gauge package. Location of Whelen 500 tank level lights: [#LOC]. | $3,997 |
| 4435-0089 | IC 10 LED SL series/Whelen PSTank water tank level gauge package. Location of Whelen PSTank Strip Lights: [#LOC]. | $1,867 |
| 4435-0090 | Additional PSTank Level Strip-Light. Located: [#LOC]. | $455 |
| 4435-0092 | 2.5" Class 1 compound pressure gauge (30-0-400). Discharge: [#LOC]. | $142 |
| 4435-0093 | 3.5" Class 1 pressure gauge (30-0-400). Discharge: [#LOC]. | $170 |
| 4435-0094 | Class 1 4-1/2" compound pressure gauge (30-0-400 PSI). | $197 |
| 4435-0101 | 2.5" Span Pressure Gauge (30-0-600). Discharge: [#LOC]. | $135 |
| 4435-0102 | 3.5" Span Pressure Gauge (30-0-600). Discharge: [#LOC]. | $164 |
| 4435-0103 | 4.5" Span Pressure Gauge (30-0-600 PSI). | $191 |
| 4435-0104 | MC Series 2000 4 Light Water Tank Level Gauge | $659 |
| 4435-0105 | MC Series 2000 4 Light Series Foam Tank Level Gauge | $828 |
| 4435-0106 | Dual Scale 3.5" Pressure Gauge 0-400 PSI / 100-2800 KPA. Replaces Standard | $327 |
| 4435-0108 | Digital Pressure Gauge IPO Duplex Gauge | $842 |
| 4435-0109 | 2.5" Class 1 Pressure Gauge (30-0-600). IPO Duplex | $142 |
| 4435-0110 | Pump Overheat Gauge Indicator with Audible Alarm | $473 |
| 4435-0111 | MC Series 500 4 LED Series Water Tank Level Gauge | $781 |
| 4435-0112 | Class 1 Pressure 4.5" Gauge (30-0-300 PSI) | $197 |
| 4435-0113 | FRC TankVision/Whelen PSTank water tank level gauge package. Location of Whelen PSTank Strip-Lights: [#LOC]. | $2,517 |
| 4435-0114 | Digital CAFS CFM Flow Meter | $2,137 |
| 4435-0115 | 2.5" NoShok Pressure Gauge (-30-0-600 PSI/100-0-4000KPA). For: [#LOC]. | $171 |
| 4435-0116 | 4" NoShock Dual Read Pressure Gauge 30-0-600PSI/100-0-4000KPA | $222 |
| 4435-0117 | FRC Tank Level Foam Tank Vision Gauge Additional Location: [#LOC] | $605 |
| 4435-0118 | 4" NoShock Dual Read Pressure Gauge 30-0-400PSI/100-0-2800KPA | $222 |
| 4435-0119 | 2.5" NoShok Pressure Gauge (0-400 PSI/-0-2800KPA) For: [#LOC] | $171 |
| 4435-0120 | Duplex Master Gauge (0-400 PSI) for CAFS or Industrial Foam Systems. | $529 |
| 4435-0122 | Fire Research Tank Vision model WL2000 Water Tank Level Gauge w/an audible alarm low level buzzer shall be installed. The buzzer shall sound when the tank volume indicator drops to 1/4 tank. | $999 |

| Item No. | Description | |
|---|---|---|
| 4435-0123 | FRC Insight model FPA410 Ultimate Pressure Gauge LPM/KPA Location: [#LOC] | $2,107 |
| 4435-0124 | 6" Class 1 Compound Pressure Gauge (30-0-400 PSI). | $663 |
| 4435-0125 | Class Digital Pressure Gauge Discharge: [#LOC] | $842 |
| 4435-0126 | Digital Master Pressure Gauge | $804 |
| 4435-0127 | 3.5" Span Pressure Gauge (0-400). Discharge: [#LOC] | $173 |
| 4435-0128 | Dual Read 2.5" Span Pressure Gauge (0-300 psi/0-2050KPA). Discharge: [#LOC] | $189 |
| 4435-0129 | Dual Read 6.0" Span Pressure Gauge (30-0-400 psi/100-0-2800KPA) | $386 |
| 4435-0130 | FRC Insight model FPA400 Ultimate Master Flow Gauge | $1,626 |
| 4435-0131 | 2.5" Class 1 Pressure Gauge (0-300). Discharge: [#LOC] | $150 |
| 4435-0133 | FRC/Whelen 500 Water Tank Level Gauge Package Location of Whelen 500 Tank Level Lights: [#LOC] | $3,960 |
| 4435-0134 | FRC Foam Tank Level Gauge "Class B Foam" with Driver for Spartan Chassis only. | $1,257 |
| 4435-0135 | Class 1 Intelli/Whelen PSTank Water Tank Level Gauge Package Location of Whelen PSTank Strip-Lights: [#LOC] | $2,386 |
| 4435-0139 | Span Pressure 4" Gauge (0-400 PSI) | $197 |
| 4435-0140 | Span Master Intake/Pressure 4" 50/50 Gauge (30-0-300) | $329 |
| 4435-0147 | Innovative Controls 14 LED SL series Water Tank Level Gauge | $516 |
| 4435-0151 | 4.5" Class 1 Pressure Gauge (30-0-600) Black Face w/White letters. | $210 |
| 4435-0152 | 2.5" Class 1 Pressure Gauge (30-0-600). Discharge with Black Face and White Letters: [#LOC] | $150 |
| 4435-0155 | Dual Read 4.5" Span Pressure Gauge (30-0-600 psi/100-0-4000 KPA) | $295 |
| 4435-0156 | Class 1 Intelli-40 Tank Water Tank Level Gauge with Blue LED's. | $744 |
| 4435-0157 | Class 1 Intelli-40 Tank Foam Tank Level Gauge with Red LED's. | $711 |
| 4435-0158 | 6" Span Pressure Gauge (30-0-600) | $682 |
| 4435-0159 | Dual Read 2.5" Pressure Gauge (30-0-400 psi/100-0-2800KPA). Discharge: [#LOC] | $200 |
| 4435-0160 | Transmission Temperature Gauge with light and a buzzer alarm for audible warning. | $367 |
| 4435-0161 | Dual Read 4.5" Pressure Gauge (30-0-400 psi/100-0-2800 KPA) | $295 |
| 4435-0162 | IC10/Whelen M6 LED Water Tank Level Gauge Package Location of Whelen M6 LED Tank Level Lights: [#LOC] | $4,139 |
| 4435-0174 | Sight Tube Water Tank Level Gauge. Located on driver's pump panel. | $513 |
| 4435-0175 | Duplex Master Gauge (0-600 PSI) for CAFS or Industrial Foam Systems. | $606 |
| 4435-0177 | Innovated Controls 14 LED SL series Tank Level Water Gauge Additional Location: [#LOC] | $724 |
| 4435-0178 | Engine gauge package at the pump operator's panel. | $845 |
| 4435-0179 | Deluxe engine gauge package with fuel and transmission temp built into the tach gauge display at the pump operator's panel. | $966 |
| 4435-0180 | 2.5" Pressure Gauge Dual Read (0-400 PSI/-0-2700KPA) . Discharge: [#LOC]. Color: [#COL]. | $250 |
| 4435-0181 | 4.5" Pressure Gauge (30-0-400 psi/100-0-2758 KPA). Color: [#COL]. | $316 |
| 4435-0183 | Sight Tube Water Tank Level Gauge with Indicator. Located inside pump compartment on driver's side as high/low as possible. | $513 |
| 4435-0184 | 2.5" NoShok pressure gauge (0-400). For: [#LOC]. | $153 |
| 4435-0185 | 4" NoShok master pressure gauges 30-0-400PSI. | $257 |
| 4435-0186 | Class 1 Tank Level Intelli 40 Water Gauge Additional Location: [#LOC] | $820 |
| 4435-0188 | Class 1 Intelli with (1) Whelen PSTank Water Tank Level Gauge. Location of Whelen PSTank Strip-Lights: Officer side rear of front cab door. | $1,414 |
| 4435-0190 | IC10 Water with (1) Whelen PSTank Water Tank Level Gauge. Location of Whelen PSTank Strip-Lights: Officer side rear of front cab door. | $1,414 |
| 4435-0191 | Dual Scale 3.5" Pressure Gauge 0-400 PSI / 100-2800KPA.. Discharge: [#LOC]. | $276 |
| 4435-0193 | 2.5" Class 1 compound pressure gauge (0-400). Discharge: [#LOC]. | $142 |
| 4435-0196 | 2.5" Waterway Pressure Gauge Dual Read (30-0-600 psi/100-0-4140 KPA). Discharge: [#LOC]. Color: [#COL]. | $201 |
| 4435-0198 | 3.5" Class 1 pressure gauge (0-400). Discharge: [#LOC]. | $173 |
| 4435-0199 | Class 1 Intelli-40M Tank Water Tank Level Gauge. | $763 |
| 4435-0200 | 2.5" Class 1 pressure gauge (0-600). Discharge: [#LOC]. | $138 |
| 4435-0205 | 3.5" LED Class 1 compound pressure gauge (30-0-400). Discharge: [#LOC]. Color: [#COL]. | $252 |
| 4435-0206 | 4.5" LED Class 1 compound pressure gauge (30-0-400). Color: [#COL]. | $252 |
| 4435-0209 | 2.5" LED Class 1 compound pressure gauge (30-0-400). Discharge: [#LOC]. Color: [#COL]. | $248 |
| 4435-0210 | PSTank Level Strip-Light Pair Located: [#LOC] (Chassis only option require sale codes for gauge and driver) | $910 |
| 4435-0212 | Generator hourmeter on officer side rear compartment. | $159 |
| 4435-0213 | Class 1 3-1/2" compound pressure gauge (30-0-400 PSI). Master intake and discharge gauges. | $344 |

| Item No. | Description | |
|---|---|---|
| 4435-0214 | IC10 Water with (1) Whelen PSTank Water Tank Level Gauge. Location of IC10 LED tank level gauge on operator panel. Location of Whelen PSTank Strip-Lights: Officer side rear of body facing rearward. | $1,414 |
| 4435-0215 | Class 1 4-1/2" compound pressure gauge (30-0-400 PSI). Locate Auto Fill Inlet. | $197 |
| 4435-0217 | Duplex 4.5" Dual Read Master Gauge (0-600 psi/0-4000KPA) for CAFS or Industrial Foam Systems. | $529 |
| 4435-0218 | 6" LED Backlit compound pressure gauge (30-0-400). Color: [#COL]. | $555 |
| 4435-0219 | Water pump digital water temperature gauge. | $362 |
| 4435-0221 | Class 1 Intelli-40M Tank Foam Tank Level Gauge with red back ground. | $763 |
| 4435-0222 | Class 1 Intelli-40M Tank Foam Tank Level Gauge with green back ground. | $763 |
| 4435-0224 | 3.5" Class 1 pressure gauge (0-400). w/Class 1 Logo. Discharge: [#LOC]. | $169 |
| 4435-0226 | DEF level gauge on pump operator's panel. | $351 |
| 4435-0229 | 2.5" LED Class 1pressure gauge (0-300). Discharge: [#LOC]. Color: [#COL]. | $201 |
| 4435-0231 | Class 1 Tank Level Intelli 40M Water Gauge Additional Location: [#LOC] | $761 |
| 4435-0232 | 4.5" LED Class 1 compound pressure gauge (30-0-300). Color: [#COL]. | $324 |
| 4435-0233 | Single Read 2.5" Thuemling Pressure Gauge (0-2800KPA. Location: One (1) for each discharge outlet. | $1,391 |
| 4435-0234 | Single Read 4.5" Thuemling Pressure Gauge (100-0-4000 KPA) (1) master intake and (1) master discharge gauges. | $573 |
| 4435-0240 | Innovative Controls 10 LED SL series tank level foam gauge additional. Location: [#LOC]. | $731 |
| 4435-0241 | Innovative Controls 10 LED series foam tank level gauge with a bright yellow easy to read graphics overlay. On pump panel. | $730 |
| 4435-0242 | Sight Tube Water Tank Level Gauge. Located on driver's side adjacent to pump operator panel. | $512 |
| 4435-0243 | 4" Innovative Controls Brass Case Nite-Glo Master Pressure Gauges with Bezel. Intake 30-0-400 and Discharge 0-400. | $898 |
| 4435-0244 | 2.5" Innovative Controls brass case pressure gauge (0-400) with color code bezel. | $163 |
| 4435-0246 | 2.5" Innovative Controls stainless steel case pressure gauge (0-400) with color code bezel. | $143 |
| 4435-0247 | 4" Innovative Controls stainless steel case master pressure gauges with bezel. Intake 30-0-400 and discharge 0-400. | $406 |
| 4435-0248 | 2.5" Innovative Controls stainless steel case dual read pressure gauge (0-2750KPA/0-400PSI) with color code bezel. | $143 |
| 4435-0249 | 4" Innovative Controls stainless steel case master pressure gauges with bezel. Intake 30-0-400 and discharge 0-400 dual read KPA/PSI. | $406 |
| 4435-0250 | 2.5" Innovative Controls brass case pressure gauge (0-400) with color code bezel. | $163 |
| 4435-0251 | Innovative Controls SL Plus series water tank level gauge with E-One logo at the bottom. | $602 |
| 4435-0252 | Innovative Controls SL Plus series foam tank level gauge (foam tank A). | $602 |
| 4435-0253 | Innovative Controls SL Plus series foam tank level gauge (foam tank B). | $602 |
| 4435-0254 | 4" Innovative Controls brass case master pressure gauges with bezel. Intake 30-0-400 and discharge 0-400. | $605 |
| 4435-0255 | 4" Innovative Controls brass case master pressure gauges with bezel. Intake 30-0-400 and discharge 0-400 dual read KPA/PSI. | $596 |
| 4435-0257 | Additional Innovative Controls SL Plus series tank level water gauge. Location: [#LOC]. | $617 |
| 4435-0258 | Addition 4" Innovative Controls stainless steel case master pressure gauges 0-400. Locate driver side pump panel. | $235 |
| 4435-0261 | 4" Innovative Controls stainless steel case master pressure gauges with bezel. Intake 30-0-400 and duplex discharge 0-400 for CAFS and Industrial applications. | $1,373 |
| 4435-0262 | 2.5" Innovative Controls Nite-Glo brass case pressure gauge (0-400) and color code bezel with blue light gauge illumination. | $324 |
| 4435-0263 | 2.5" Innovative Controls Nite-Glo brass case pressure gauge (0-400) and color code bezel with red light gauge illumination. | $324 |
| 4435-0264 | FRC TankVision/FRC Maxvision water tank level gauge package. Location of FRC Maxvision Strip-Lights: each side of cab towards rear | $2,620 |
| 4435-0266 | 2.5" Innovative Controls Nite-Glo brass case pressure gauge (0-400) and color code bezel with white light gauge illumination. | $324 |
| 4435-0269 | 4" Innovative Controls stainless steel case pressure gauge (0-400). Location: Master discharge pressure gauge. | $223 |
| 4435-0270 | IC SL PLUS series/Whelen PSTank water tank level gauge package. Location of Whelen PSTank Strip Lights: [#LOC]. | $2,421 |
| 4435-0271 | 2.5" LED Class 1pressure gauge (0-400). Discharge gauge. Color: [#COL]. | $248 |
| 4435-0272 | 4" Innovative Controls stainless steel case master pressure gauges with bezel. Intake 30-0-400 and duplex discharge 0-400 dual read KPA/PSI. for CAFS and Industrial applications. | $1,373 |

| Item No. | Description | |
|---|---|---|
| 4435-0274 | 2.5" Innovative Controls stainless steel case pressure gauge (0-300) with color code bezel. | $143 |
| 4435-0275 | 4" Innovative Controls stainless steel case duplex pressure gauge (0-400) with color code bezel. | $1,079 |
| 4435-0277 | Class 1 ENFO IV system on pump operator's panel. (METRIC UNITS) | $949 |
| 4435-0278 | FRC Insight Ultimate model FPA-402 combination pressure/flow gauge w/ back light. Include color code bezel. | $2,179 |
| 4435-0281 | Class 1 Intelli w/driver and (1) Whelen PSTank Water Tank Level Gauge. Location of Whelen PSTank Strip-Lights: Driver side upper body forward of scene light. | $1,222 |
| 4435-0283 | 2.5" LED Class 1 compound pressure gauge (30-0-400). Color Red | $248 |
| 4435-0285 | Fire Research TankVision Pro model WL300-A00 water tank level gauge. | $723 |
| 4435-0286 | Fire Research TankVision Pro model WL360-A00 Class A foam tank level gauge. | $819 |
| 4435-0287 | Fire Research TankVision Pro model WLA300-B00 water level gauge Additional. Location: [#LOC]. | $638 |
| 4435-0288 | Fire Research TankVision Pro model WLA360-A00 Class A and WLA370-B00 Class B foam tank level gauges. | $1,636 |
| 4435-0289 | Fire Research TankVision Pro model WLA 370-A00 Class B foam tank level gauge. | $819 |
| 4435-0291 | 4" Innovative Controls stainless steel case master pressure gauges with bezel. Intake 30-0-400 and duplex discharge 0-400 for CAFS and Industrial applications. IPOS HALE | $406 |
| 4435-0292 | FRC TankVisionWLA300-B00/Whelen PSTank water tank level gauge package. Location of Whelen PSTank Strip-Lights: [#LOC]. | $2,517 |
| 4435-0293 | Class 1 3.5" discharge gauges. Provide for each discharge. (0-300) [#LOC] | $169 |
| 4435-0294 | 6" Class 1 Compound Pressure Gauge (30-0-400 PSI). | $663 |
| 4440-0005 | 2.5" Left Intake Akron Manual Valve. | $1,128 |
| 4440-0006 | 2.5" Right intake Akron manual valve. | $1,128 |
| 4440-0010 | 3" Left Intake Akron Manual Valve. | $1,850 |
| 4440-0011 | 3" Right Intake Akron Manual Valve. | $1,892 |
| 4440-0014 | 5" front intake without valve. | $3,587 |
| 4440-0015 | 5" Front Intake w/5" Air Actuated Valve and Relief. | $5,656 |
| 4440-0025 | 5" front intake with no valve plumbed through front bumper. | $4,009 |
| 4440-0026 | 5" Front Intake w/5" Air Actuated Valve and Relief Plumbed Through Front Bumper. | $6,081 |
| 4440-0027 | 2.5" Left Intake Hale Manual Valve | $1,149 |
| 4440-0028 | 2.5" Right Intake Hale Manual Valve | $1,351 |
| 4440-0029 | 3" Right Intake Hale Manual Valve | $2,393 |
| 4440-0031 | 3" Left Intake Hale Manual Valve | $1,877 |
| 4440-0036 | 2.5" left intake Elkhart manual valve. | $1,282 |
| 4440-0037 | 3" Left Intake Elkhart Manual Valve | $2,074 |
| 4440-0040 | 2.5" Right Intake Elkhart Manual Valve | $1,282 |
| 4440-0041 | 3" Right Intake Elkhart Manual Valve | $2,118 |
| 4440-0061 | 5" front intake w/5" Akron electric actuated valve and relief. | $7,082 |
| 4440-0062 | 5" Front Intake w/5" Elkhart Electric Actuated Valve and Relief. | $7,085 |
| 4440-0064 | 2.5" Left Intake w/3" Akron Manual Valve | $1,723 |
| 4440-0065 | 2.5" Left Intake w/3" Hale Manual Valve | $1,925 |
| 4440-0066 | 2.5" Left Intake w/3" Elkhart Manual Valve | $1,941 |
| 4440-0067 | 2.5" Right Intake w/3" Akron Manual Valve | $1,723 |
| 4440-0068 | 2.5" Right Intake w/3" Hale Manual Valve | $1,925 |
| 4440-0069 | 2.5" Right Intake w/3" Elkhart Manual Valve | $1,941 |
| 4440-0074 | 5" Front Intake without Valve Low "S" in Tray | $3,493 |
| 4440-0075 | 5" Front Intake w/5" Air Actuated Valve and Relief Low "S" in Bumper Tray. | $5,563 |
| 4440-0077 | 2.5" Side Intake Operator Control Akron Elec Valve Drivers side. | $2,996 |
| 4440-0078 | 2.5" Left Intake Elkhart Unibody TM Control Manual Valve | $1,397 |
| 4440-0082 | 2.5" Left Intake Akron Manual Valve With Integral 30 Degree Droop | $1,201 |
| 4440-0083 | 2.5" Right Intake Akron Manual Valve With Integral 30 Degree Droop | $1,201 |
| 4440-0084 | 5" Front Intake w/5" Manual Gear Actuated Valve and Relief | $6,636 |
| 4440-0086 | 2.5" Side Intake Operator Control Akron Elec Valve Officer side. | $2,996 |
| 4440-0089 | 5" Front Intake w/5" Electric Actuated Valve and Relief Low "S" in Bumper Tray | $6,990 |
| 4440-0092 | 3" Left Intake Elkhart Unibody Manual Valve | $1,850 |
| 4440-0093 | 3" Right Intake Elkhart Unibody Manual Valve | $1,892 |
| 4440-0094 | 2.5" Left Intake Elkhart Unibody Manual Valve w/chrom valve face. | $1,128 |
| 4440-0095 | 2.5" Right Intake Elkhart Unibody Manual Valve w/chrome valve face. | $1,128 |
| 4440-0096 | 5" Front Intake w/4" Hale Electric Actuated Valve and Relief Low "S" in Bumper Tray | $6,966 |
| 4440-0097 | 2.5" Right Intake Elkhart Unibody Manual Valve | $1,128 |
| 4440-0098 | 5" Front Intake w/5" Akron Electric Actuated Valve and Relief | $7,082 |

| Item No. | Description | |
|---|---|---|
| 4440-0103 | 5" Front Intake w/5" Elect. Actuated Valve and Relief Plumbed Through Front Bumper. | $7,082 |
| 4440-0127 | Elkhart 2.5" foam system intake with swing handle. For use with Williams Advent or Hot Shot foam systems. Locate to [#LOC]. | $1,128 |
| 4440-0130 | 2.5" Right Intake w/3" Akron Manual Valve. Location: (REAR OF STREAM) | $1,723 |
| 4440-0131 | 2.5" Right Side intake Akron manual valve. Locate valve down low and the handle to be horizontally. | $1,299 |
| 4440-0138 | 2.5" right intake Akron manual valve with chrome plated end. | $1,177 |
| 4440-0140 | 2.5" right intake Akron manual valve located rear of steamer IPO standard location. | $1,128 |
| 4440-0141 | 5" Front Intake w/5" Air Actuated Valve and Relief. A three position air control switch will be located adjacent to the front suction on top of gravel shield inboard of front suction swivel. | $5,656 |
| 4440-0146 | Aux 2.5" foam system intake with swing handle. Locate to be [#LOC]. | $1,128 |
| 4440-0147 | 2.5" Left Intake Akron Manual Valve With Integral 30 Degree Chrome Droop. | $1,394 |
| 4440-0148 | 2.5" Right Intake Akron Manual Valve With Integral 30 Degree Chrome Droop. | $1,394 |
| 4440-0150 | 2.5" Side Intake Top Mount Contro Handlel Akron manual valve. With Integral 30 Degree Droop.. Location: [#LOC]. | $1,569 |
| 4440-0157 | 2.5" Intake with Akron electric valve with 9323 controller. Controller to be located at pump operator panel. Locate intake [#LOC]. | $3,011 |
| 4440-0159 | 5" front intake w/5" Akron electric actuated valve and relief with 9323 valve controller. | $7,082 |
| 4440-0160 | 5" Front Intake w/5" Electric Akron Valve with 9323 controller and Relief Low "S" in Bumper Tray | $6,990 |
| 4440-0164 | 5" Front Intake w/5" Elect. Akron Valve 9323 controller and Relief Plumbed Through Front Bumper. | $7,185 |
| 4440-0167 | 5" Front intake w/5" hand wheel actuated valve and relief. | $6,489 |
| 4440-0172 | 5" Front Intake w/5" Jamesbury Valve Hand Wheel Actuated and Relief. "Low S" | $6,766 |
| 4445-0004 | Front intake swivel 5" polished chrome. | $2,131 |
| 4445-0005 | Front intake swivel 6" polished chrome. | $2,217 |
| 4445-0006 | Intake Adapter 5" FNPT x 4.5" MNST for Front Intake | $434 |
| 4445-0007 | Intake adapter 5" FNPT x 6" MNST for front intake. | $535 |
| 4445-0008 | Intake Relief Valve - Elkhart. | $639 |
| 4445-0009 | Intake relief valve Akron. | $469 |
| 4445-0011 | Valve Relief Intake - Ross 2.5" | $1,932 |
| 4445-0013 | 2.5" Check Valve for [#LOC] intake. | $404 |
| 4445-0014 | 3" Check Valve for [#LOC] Intake | $690 |
| 4445-0015 | 6" Check Valve for [#LOC] Steamer | $673 |
| 4445-0016 | Intake relief valve Hale 2.5". | $645 |
| 4445-0018 | Intake relief valve outlet to be extended to the side of the truck under the running board. Includes tag that reads "Intake Pressure Relief Outlet - Do Not Cap". | $291 |
| 4445-0019 | Intake Adapter 5" FNST x 4.5" MNST for Front Intake | $434 |
| 4445-0020 | Intake Adapter 5" FNST x 6" MNST for Front Intake | $535 |
| 4445-0023 | Recessed front suction intake swivel in bumper 3" in tray. | $982 |
| 4445-0024 | Intake adapter 5" FNPT x 5" MNST for front intake. | $398 |
| 4445-0025 | Intake Adapter 5" FNPT x 5" MNST for Rear Intake. | $398 |
| 4445-0028 | Intake bleeder/drain valve to be extended to the side of the truck. | $60 |
| 4445-0030 | Intake Adapter 5" FNST x 4" MNST with LH 4" cap for Front Rear or Side Intake. | $434 |
| 4445-0032 | Front Intake Swivel 5" Painted Job Color | $120 |
| 4445-0035 | Front Intake Swivel 6" Painted Job Color | $2,217 |
| 4445-0038 | Waterous Intake Pressure Relief Valve. | $1,476 |
| 4445-0039 | Intake Adapter 2-1/2"MNST X 3" FNST Swivels with plug. | $246 |
| 4445-0048 | Intake pressure relief valve Task Force Tips. | $452 |
| 4445-0049 | Intake relief valve outlet to be extended to the side of the truck under the front body compartment. Includes tag that reads "Intake Pressure Relief Outlet - Do Not Cap". | $291 |
| 4445-0052 | Recessed front suction intake swivel in bumper 3" in tray using aluminum smooth plate with black Scorpion coating (IPOS diamond plate). | $1,064 |
| 4445-0054 | Intake Adapter 5" FNPT x 4" MNST for Front Rear or Side Intake with 4" Cap. | $434 |
| 4445-0055 | Intake adapter 5" FNPT x 5" MNST for front intake.The 5" front intake adapter shall be mounted so the threads approximately 2" from the bumper (Flush+2). | $398 |
| 4445-0056 | Storz Connector 5" FNPT x 4" Storz 30 Degree Elbow with Tethered Cap For Rear Intake. | $453 |
| 4445-0058 | 5" Check Valve shall be install in front intake to prevent back flow. | $1,115 |
| 4445-0060 | Front intake bleeder valve to be located adjacent to inlet at front bumper. | $91 |
| 4445-0062 | 2.5" Left Aux Intake shall be as located approximately 6" below main pump inlet offset to rear. | $360 |
| 4445-0068 | Storz Connector 5"FNPT x 5" Storz with Tethered Cap For front/rear intake. | $372 |

| Item No. | Description | |
|---|---|---|
| 4445-0069 | Intake Adapter 5" FNPT x 4.547 PHOENIX 6 TPI with cap for Front or rear intake. | $644 |
| 4445-0071 | Front Intake Swivel 5" Painted Job Color | $2,130 |
| 4445-0074 | 2.5" Aux Intake shall be as located approximately 12" awayfrom main pump inlet offset to rear. | $360 |
| 4445-0075 | Manual override knob on officer's side pump panel for front intake electric valve. | $336 |
| 4445-0079 | Intake Adapter 4" FNPT x 5" MNST with cap for Rear Intake | $434 |
| 4445-0080 | Intake pressure relief valve Trident Air Max with adjustment knob and pressure gauge. | $1,417 |
| 4450-0007 | 1" Tank Fill Akron Manual Valve | $410 |
| 4450-0008 | 1.5" tank fill Akron manual valve. | $933 |
| 4450-0009 | 1.5" Tank Fill Hale Manual Valve | $1,080 |
| 4450-0010 | 2" tank fill Akron manual valve. | $1,120 |
| 4450-0011 | 2.5" tank fill Akron manual valve. At pump panel. | $1,200 |
| 4450-0012 | 1.5" tank drain Akron manual valve. | $817 |
| 4450-0014 | Direct 2.5" water tank fill with Akron valve. Location: [#LOC]. | $1,358 |
| 4450-0021 | 3" Dual Tank to Pump Akron Manual Valves - Side Panel Controlled | $1,596 |
| 4450-0022 | 3" tank to pump Akron manual valve. | $1,180 |
| 4450-0023 | 3" Tank to Pump Akron Air Actuated Valve | $1,653 |
| 4450-0032 | 2" Tank Fill Akron Electric Valve | $2,760 |
| 4450-0034 | 2.5" Tank Fill "AutoFill" Automatic Tank Fill Valve. Location: [#LOC]. Requires Class 1 tank gauge. | $7,945 |
| 4450-0035 | 2.5" Direct Tank Fill Location: [#LOC] | $1,246 |
| 4450-0038 | Hale 4" Air Tank to Pump for CAFSPRO Foam System. | $4,467 |
| 4450-0054 | 2.5" Tank Fill Hale Manual Valve | $1,577 |
| 4450-0055 | Hale 4" Manual Tank-to-pump | $3,372 |
| 4450-0056 | 3" Air Tank to Pump for Cafspro Foam System with4" plumbing. | $2,312 |
| 4450-0057 | 3" Tank to Pump Hale Manual Valve | $1,345 |
| 4450-0058 | 2.0" Tank Fill Hale Manual Valve | $1,283 |
| 4450-0059 | 1.5" Tank Fill Elkhart Manual Valve | $1,014 |
| 4450-0060 | 2" Tank Fill Elkhart Manual Valve | $1,202 |
| 4450-0061 | 2.5" Tank Fill Elkhart Manual Valve | $1,351 |
| 4450-0062 | 3" Tank to Pump Elkhart Manual Valve | $1,406 |
| 4450-0064 | Direct 2.5" Water Tank Fill with Elkhart Valve. Location: [#LOC] | $1,509 |
| 4450-0066 | Tank-to-pump 4" Akron Air Valve. | $3,595 |
| 4450-0067 | Tank-to-pump 4" Akron electric valve. | $3,676 |
| 4450-0068 | 3" Tank to Pump w/3.5" Waterous Valve | $1,803 |
| 4450-0070 | 2.5" Tank Fill Hale Electric Valve | $2,824 |
| 4450-0071 | Tank-to-pump 4" Hale Electric Valve | $4,633 |
| 4450-0072 | 2.5" Direct Fill Line into the tank Akron electric valve. Location: [#LOC]. | $3,276 |
| 4450-0073 | 3" Tank to Pump w/3.5" Waterous Electric Valve | $3,484 |
| 4450-0074 | 2" Tank Fill Akron Valve Handwheel Control | $2,175 |
| 4450-0075 | 2" Tank Fill Elkhart Valve Handwheel | $2,228 |
| 4450-0076 | 2.5" Tank Fill Akron Valve Handwheel Control | $2,254 |
| 4450-0077 | 2.5" Tank Fill Elkhart Valve Handwheel Control | $2,304 |
| 4450-0078 | 3" Dual Tank to Pump Akron Air Valves. | $2,627 |
| 4450-0082 | 1.5" Tank Drain Hale Manual Valve | $921 |
| 4450-0083 | 1.5" Tank Drain Elkhart Manual Valve | $898 |
| 4450-0085 | 3" Tank to Pump Elkhart Unibody Manual Valve | $1,496 |
| 4450-0086 | 2" Tank Fill Elkhart Unibody Manual Valve | $1,205 |
| 4450-0088 | 2" Tank Fill Elkhart Unibody Electric Valve | $2,551 |
| 4450-0090 | 1.5" Direct Tank Fill Elkhart Unibody Manual Valve Left Side Panel | $1,119 |
| 4450-0091 | 2.5" Direct Tank Fill "AutoFill" Automatic Tank Fill Valve. Location: [#LOC]. | $4,496 |
| 4450-0092 | 3" Tank to Pump Akron Valve Hand Wheel Control. | $2,435 |
| 4450-0093 | Tank-to-pump 3" Akron Electric Valve | $3,432 |
| 4450-0099 | 3" Tank to Pump Elkhart Unibody Air Actuated Valve | $1,664 |
| 4450-0105 | 3" Tank Fill Akron Manual Valve | $1,577 |
| 4450-0107 | Direct 2.5" water tank fill with 3" Elkhart manual valve. Location: [#LOC]. | $1,740 |
| 4450-0108 | 2" tank fill Akron 9313 electric valve. | $2,760 |
| 4450-0110 | Tank-to-pump 4" Akron electric valve. | $3,676 |
| 4450-0114 | 3" Tank to Pump Electric Over Air Actuated Valve. (For Pump&Roll Operation) | $1,752 |
| 4450-0117 | Tank-to-pump 4" Elkhart Unibody Electric Valve | $3,676 |
| 4450-0119 | 3" tank to pump Akron manual valve w/4" tank connection. | $1,203 |
| 4450-0121 | 3" Tank to pump Akron air actuated valve w/4" tank connection. | $1,653 |

| Item No. | Description | |
|---|---|---|
| 4450-0122 | 3" Tank To Pump Akron Electric Actuated Valve w/4" Plumbing. Include 9323 controller. | $3,392 |
| 4450-0123 | Direct 3" Tank Fill Akron Electric Valve with control at pump operator panel valve Location: [#LOC] | $3,310 |
| 4450-0124 | 3" Tank To Pump Elkhart Unibody Manual Valve w/4" Plumbing. | $1,262 |
| 4450-0125 | 3" Tank To Pump Elkhart Unibody Air Actuated Valve w/4" Plumbing | $1,746 |
| 4450-0127 | 2.5" Tank Fill "AutoFill" Automatic Tank Fill Valve with IntelliTank level gauge located behind officer side pump panel. Location: [#LOC]. | $7,945 |
| 4450-0132 | 3" Tank To Pump Elkhart Unibody Electric Actuated Valve w/4" Plumbing | $3,408 |
| 4450-0133 | 3" Tank To Pump Akron air actuated valve w/4" plumbing from the tank to the valve or check. | $1,653 |
| 4450-0134 | 3" Tank To Pump Akron Manual Valve w/ Trident Hand Wheel Control and 4" tank connection. | $2,964 |
| 4450-0143 | 2" Tank Fill Elkhart Electric Valve | $2,551 |
| 4450-0144 | 3" Tank to Pump Elkhart Air Actuated Valve | $1,664 |
| 4450-0146 | Tank-to-pump 3" Elkhart Unibody Electric Valve | $3,064 |
| 4450-0156 | 3.0" Tank Drain Akron Air Actuated Valve. | $1,653 |
| 4450-0160 | Bush Pack 1" Fill with 1" Cam-Lock fitting located on pump operator pump panel. Include a 3' length of 1" clear hose. | $417 |
| 4450-0164 | Direct 2.5" Tank Fill Akron Electric Valve with Dual Control (1) control at the valve and (1) at the pump operator panel. Valve location officer side rear. | $3,947 |
| 4450-0166 | Additional 3" Tank To Pump Akron Manual Valve w/4" plumbing. Shall include internal plumbing to the rear of the tank into the rear sump on officer side. | $2,172 |
| 4450-0175 | 4" rear direct tank fill. Includes electric dual control (1)operator panel (1) at valve with 4" Swivel Storz elbow and cap. Located to (1) left and (1) right side off the rear body | $3,897 |
| 4450-0176 | 3" Tank to Pump Electric Over Air Actuated Valve w/4" Plumbing.. Include (1) control in cab and (1) control pump operator panel). | $1,751 |
| 4450-0185 | 3" Tank to Pump Electric Over Air Actuated Valve. (For Pump&Roll Operation) | $1,751 |
| 4450-0186 | 2.5" Tank Fill "AutoFill" Automatic Tank Fill Valve. Location: [#LOC]. | $8,148 |
| 4450-0199 | Reverse push/pull handle on 3" tank to pump Akron manual valve. The "in" position will be open and the "out" position will be closed. | $57 |
| 4450-0207 | 2" Tank to Pump Electric Over Air Actuated Valve. (For Pump&Roll Operation) | $1,243 |
| 4450-0210 | 2" tank fill Akron electric valve & Navigator Pro 9323 Controller. | $2,690 |
| 4450-0211 | 2.5" Direct Tank Fill "AutoFill" Automatic Tank Fill Valve. Waterous (Auto Fill) shall be "T" into both side 6" intake front and rear 5" intake with a special manifold and check valves. | $5,550 |
| 4450-0215 | 2" tank fill Akron Electric Valve & Navigator 9325 controller. Controller only no flow or pressure reading require. | $2,716 |
| 4450-0216 | Tank-to-pump 4" Akron electric valve with Navigator 9325 Controller. Controller only no flow or pressure reading require. | $3,676 |
| 4450-0229 | 3" Tank Fill Akron Valve Handwheel Control | $2,373 |
| 4450-0230 | 3.5" Tank To Pump Akron Manual Valve w/4" Plumbing. Piping from the tank to the valve to be 4". | $1,472 |
| 4450-0236 | 2" Tank Fill Elkhart Unibody Valve Handwheel | $2,227 |
| 4450-0237 | 3" Tank To Pump Elkhart Unibody Manual Valve w/4" Plumbing. Include manual hand wheel control. | $1,862 |
| 4450-0238 | Tank-to-pump 4" Akron electric valve with Navigator 9323 Controller. | $3,676 |
| 4450-0243 | Direct 2.5" Water Tank Fill with Firemen Friend high flow Valve. Location: B1. | $1,560 |
| 4450-0250 | 2.5" Direct Tank Fill "Elkhart AutoFill" UBEC1AT Automatic Tank Fill Valve. Location: off driver side MIV intake valve. | $4,804 |
| 4450-0256 | 2.5" Rear Direct tank fill. Includes Fireman Friend 3" valve with 4" body to terminate with 2.5" FNST adapter 30 degree droop and plug. Location; B1 | $1,735 |
| 4450-0257 | 1.5" Tank Drain Elkart Manual Valve with pull cable control at left pump panel. Valve shall be located at the tank sump and extend plumbing below frame rail. | $858 |
| 4450-0258 | 1.5" Tank Fill/Re-circulation line Akron manual valve. | $933 |
| 4450-0259 | 1.5" Tank Fill/Re-circulation line Elkhart manual valve. | $933 |
| 4450-0260 | 2.5" Tank Drain Akron Air Actuated Valve. | $1,464 |
| 4450-0261 | 2.5" Tank Fill Waterous 2.5" Valve. | $1,472 |
| 4450-0264 | Second 3" tank to pump Akron manual valve w/4" tank connection. | $1,203 |
| 4450-0267 | 2.5" Direct Fill Line into the tank Elkhart electric valve. Location: driver side pump panel. | $3,276 |
| 4450-0269 | 3" Dual Tank to Pump Akron Manual Valves with 4" tank connection- Side Panel Controlled. | $2,625 |
| 4450-0272 | 2.5" Direct Fill Line into the tank Elkhart electric valve. Location: driver side pump panel. | $3,276 |
| 4450-0273 | Direct 2.5" Water Tank Fill with Akron manual/Firemen Friend Valve. Location: Officer side rear below ladder tunnel. Include 2.5" stainless steel pipe and/or high pressure flexible hose from the connection to the water tank. | $2,695 |

| Item No. | Description | |
|---|---|---|
| 4455-0004 | Gasket Material around all Discharges Intakes and Handle Slots on Pump Panel to hold in heat of Module Plumbing | $993 |
| 4455-0010 | Winterization Package. System shall protect the pump piping firefighting systems and watertank to 0 degree. While in storage the winterization system shall be powered through shoreline connection. | $4,195 |
| 4455-0012 | Winterization Package. System shall protect the pump piping firefighting systems and water tank to 0 degree. While in storage the winterization system shall be powered through winterization shoreline connection. | $4,195 |
| 4460-0000 | Air outlet w/snubber valve. Location: [#LOC]. | $273 |
| 4460-0001 | Air blow-out for: [#LOC]. | $256 |
| 4460-0002 | Hose reel blow-out primary. | $261 |
| 4460-0004 | All tags installed on the exterior of the apparatus shall be mechanically fastened with stainless steel screws. These include but not limited to tags installed on the pump module body cab and bumper. Pump panel tags shall be mechanically fastened regardless whether the panel is enclosed behind a door. | $1,282 |
| 4460-0005 | Fire Shop Bezel Chrome - Standard 2.5" Gauge | $40 |
| 4460-0006 | Radiator Fill Valve on Pump Panel. | $301 |
| 4460-0007 | Air outlet with snubber valve and 25' hose. Location: [#LOC]. | $306 |
| 4460-0008 | Air Outlet Valve to operate off of CAFS System Compressor. Location: [#LOC]. | $376 |
| 4460-0009 | Pump panel tags special color. (Must specify.) | $323 |
| 4460-0010 | Pump panel tags - Special label. (Must specify.) | $276 |
| 4460-0017 | Class 1 Color Coded Bezel Chrome - 2.5" Gauge. | $26 |
| 4460-0018 | Class 1 color coded bezel chrome - 3.5" gauge. | $30 |
| 4460-0023 | Span Color Coded Bezel - 2.5" Gauge | $11 |
| 4460-0024 | Span Color Coded Bezel - 3.5" Gauge | $11 |
| 4460-0026 | CAFS Air Outlet Valve Recess Driver side Pump Panel with door. | $380 |
| 4460-0029 | All exterior 1x3 and .1/2x1 tags shall be Vision Mark tags. | $714 |
| 4460-0032 | Push/Pull Rod Extrusion at pump panel to be thru bolted with nuts IPOS nut cert. | $96 |
| 4460-0033 | CAFS Air outlet .75 valve with Handle and Quick Disconnect. Location: [#LOC] | $423 |
| 4460-0039 | Innovative Controls Color Coded Bezel Chrome - 2.5" Gauge. | $109 |
| 4460-0043 | Pump panel tags mechanically fastened with screws. | $423 |
| 4460-0059 | Class 1 color coded bezel gauge trim ring - 2.5" Gauge | $38 |
| 4460-0061 | Air outlet with 3/8" valve 1/4 turn and 25' hose. Location:driver side | $360 |
| 4460-0062 | Air outlet w/3/8" valve. Location: Officer side pump panel. | $300 |
| 4460-0067 | Officer side pump panel shall include an access door to provide access to the cab tilt switch and manual jack as mounted. | $200 |
| 4460-0069 | Class 1 color coded bezel gauge trim ring - 3.5" gauge. | $43 |
| 4460-0070 | Fire Shop Trim Ring/Collar Chrome w/color code insert - Side Discharge/Intake | $98 |
| 4460-0074 | Air blow-out for:Frt Jumpline .75" lift lever turn valve IPOS. | $304 |
| 4460-0078 | Pump panel tags special color. #1 -Red Crosslay #2 -Yellow 2" tank fill- Black 3" tank to pump- Black 2.5" Left Intake - Black 2.5 Left rear dis -Blue 3" Deck Gun - Grey 2.5 Left Dis - Pink 2.5 Right Dis- Green 4" Right Dis- Purple. | $323 |
| 4460-0085 | CAFS Air Outlet Valve Recess Driver side Pump Panel with door. | $380 |
| 4460-0086 | Air blow-out with Innovative Control 1/4" valve w/1/4 turn "T" handle and label for: [#LOC]. | $245 |
| 4460-0087 | Hose reel blow-out with Innovative Controls 1/4" valve w/1/4 turn handle. | $245 |
| 4460-0088 | Air outlet with Innovative Control 1/4" valve w/1/4 turn "T" handle and label for: [#LOC]. | $245 |
| 4460-0089 | Pump panel tags special color. Discharge #1 - blue; Discharge #2 - white; Preconnect #1 - red; Preconnect #2 - yellow. | $257 |
| 4460-0090 | All single tags placed directly on the pump panel to be mechanically fastened with screws. | $423 |
| 4460-0095 | Air outlet with Innovative Control 1/4" valve w/1/4 turn "T" handle w/label and 25' hose. Location: driver side | $360 |
| 4460-0096 | Speaker Grille Located on the pump operator panel. | $250 |
| 4465-0003 | FRC In-Control pressure governor. Includes engine and master pump gauges. | $5,598 |
| 4465-0005 | Class 1 Captain pressure governor. | $2,963 |
| 4465-0007 | Class1 Command Master pressure governor. Includes pump intake pressure and discharge pressure throttle relief tank level(s) water oil volt and tachometer. | $5,423 |
| 4465-0008 | FRC PumpBoss Pressure Governor. Includes engine gauges. | $2,753 |
| 4465-0009 | FRC Pro-S Pressure Governor | $2,906 |
| 4465-0010 | FRC In-Control pressure governor TGA200. Includes engine transmission and master pump gauges. | $5,659 |
| 4465-0011 | Class 1 TPG pressure governor. Includes water oil volt and tachometer. | $2,284 |

| Item No. | Description | |
|---|---|---|
| 4465-0012 | Fire Commander II pressure governor. Includes engine gauges Pump Ditigal Master Gauges. Detroit engines only. | $5,415 |
| 4465-0013 | FRC In-Control pressure governor. Includes engine and master pump gauges.The discharge pressure display shall show pressures from 0 to 4000 kPa. The intake pressure display shall show pressures from -100 to 4000 kPa. | $5,598 |
| 4465-0015 | FRC In-Control pressure governor TGA300. Includes engine transmission and master pump gauges. | $4,122 |
| 4465-0017 | FRC PumpBoss pressure governor PBA400. Includes engine monitor gauges. | $2,753 |
| 4465-0018 | FRC InControl pressure governor TGA400. Includes engine transmission and master pump gauges. | $4,122 |
| 4465-0020 | Class 1 TPG Plus pressure governor. Includes master intake and discharge gauges water oil volt and tachometer. | $3,050 |
| 4465-0021 | FRC In-Control pressure governor TGA400-A10. Includes engine transmission and master pump gauges. | $4,122 |
| 4465-0024 | The Pressure Governor as mounted on the pump panel shall include a stainless steel shield/visor to shade the display from direct sunlight (the shield/visor shall share the same painted on finish as the pump panel if applicable). | $155 |
| 4465-0028 | Class 1 Sentry pressure governor/ Twister throttle. Includes master intake and discharge gauges water oil tran volt and tachometer. | $2,930 |
| 4465-0030 | FRC PumpBoss pressure governor PBA200. Includes engine monitor gauges. | $2,373 |
| 4465-0031 | FRC Total Control pressure governor TCA100. Includes engine transmission and master pump gauges. | $3,628 |
| 4475-0000 | Pump certification 750-2250 GPM | $2,627 |
| 4475-0002 | UL Testing - the unit will be third party tested and certified by Underwriters Laboratories Inc. (UL). UL will issue a Certificate of Automotive Fire Apparatus Examination and Test stating the unit's compliance with the required pump sections of NFPA. | $2,979 |
| 4475-0009 | UL Testing - the unit will be third party tested and certified by Underwriters Laboratories Inc. (UL). UL will issue a Certificate of Automotive Fire Apparatus Examination and Test stating the unit's compliance with the required pump sections of NFPA. | $2,978 |
| **ELECTRICAL SYSTEMS** | | |
| 5010-0003 | Multiplex modem kit. Includes cable modem and adapter harness. | $930 |
| 5010-0004 | Multiplex data logger. | $659 |
| 5010-0005 | Multiplex electrical system for aerials. | $5,895 |
| 5010-0008 | Electrical system w/Load Manager for Tiller | $4,177 |
| 5010-0013 | Vehicle data recorder - 2009 / 2016 NFPA compliant. Includes occupant detection with display. Display location: [#LOC]. | $2,612 |
| 5010-0015 | Additional CrewGuard display for use with VDR. Location: [#LOC]. | $504 |
| 5010-0017 | Multiplex electrical system for Tiller aerial. | $7,109 |
| 5010-0024 | Modem for use with the E-ONE multiplex electrical system. | $649 |
| 5010-0037 | Multi-color touch screen display for multiplexed based electrical system. Location: [#LOC]. | $1,921 |
| 5010-0039 | V-MUX Electrical system for aerials. | $5,895 |
| 5010-0049 | Vehicle data recorder - 2009 / 2016 NFPA compliant. Includes occupant detection shown in multiplex display. E-ONE chassis only. | $2,254 |
| 5010-0050 | V-MUX Electrical system for Tiller aerial. | $7,109 |
| 5010-0051 | HVAC Controlled through multiplex display(s). | $1,186 |
| 5010-0052 | Vista IV touch screen display for V-MUX electrical system. Location: [#LOC]. | $2,170 |
| 5010-0055 | Vista IV display for V-MUX electrical system. Location: [#LOC]. | $1,850 |
| 5010-0057 | GPS Module for V-MUX electrical system (Garmin). Includes antenna. Requires Vista display. | $1,668 |
| 5010-0059 | VFD Text display for V-MUX electrical system. Location: [#LOC]. | $806 |
| 5010-0065 | Pump and roll screen for multiplex display. Reference specification for details. | $1,546 |
| 5010-0067 | GPS Module for V-MUX electrical system (Weldon). Includes antenna. Requires Vista display with touch screen. | $1,262 |
| 5010-0070 | Es-Key Multiplex electrical system for aerials. | $5,895 |
| 5010-0074 | Special programming for multiplex color display (per hour). Requires engineering review and approval to determine feasibility and time. | $55 |
| 5010-0075 | Vista display to have a customized sticker for legend buttons (Reference info in file for new configuration). May require special programming fee. | $540 |
| 5010-0078 | Link2 Vehicle information system for V-MUX electrical system. Does not include required subscription. | $1,528 |
| 5010-0079 | Vista display translated to French. | $714 |
| 5010-0081 | Pump and roll screen for multiplex display. Reference specification for details. | $1,546 |

| Item No. | Description | |
|---|---|---|
| 5010-0084 | Newton Dump control screen for multiplex display. | $557 |
| 5010-0086 | Weather proof Vista display for V-MUX electrical system. Location: [#LOC]. | $3,757 |
| 5050-0000 | Vanner Bravo 1800 watt inverter. For use with (2) quartz lights. Includes on/off switch in cab. Inverter to be mounted in a body compartment as close to the chassis batteries as practical (20' max cable length). | $2,889 |
| 5050-0017 | Body 110 volt outlets shall have a dedicated breaker within the breaker box for no more than every (2) body mounted receptacles (single outlet duplex etc. as applicable). This is to provide multiple isolated circuits as required that carry no more than (2) receptacles located throughout the body. | $534 |
| 5050-0018 | Vanner Tru-sine 1000 watt inverter. For use with (4) cab interior receptacles when generator is not running or shoreline is not connected. Includes on/off switch in cab. Inverter to be mounted in a body compartment as close to the chassis batteries as practical (20' max cable length). | $1,944 |
| 5050-0019 | Inverter prewire for dealer/customer supplied and installed 3KW inverter. Includes 12 volt wiring and A/C cabling to breaker box. Prewire to [#LOC]. | $828 |
| 5100-0000 | Foot switch to control air horns located [#LOC]. | $120 |
| 5100-0001 | Switch circuit three way. Includes (1) additional switch. An additional switch required for more than two locations. Location: [#LOC]. | $170 |
| 5100-0002 | Momentary switch with 6' pendant for cab tilt. Yellow weatherproof push button at end of coiled cord. Location of switch plug-in: [#LOC] | $378 |
| 5100-0006 | Foot switch to control Q2B located [#LOC]. | $120 |
| 5100-0007 | Foot switch to control electronic siren located [#LOC]. | $120 |
| 5100-0009 | Audible door ajar alarm wired through door ajar light. | $62 |
| 5100-0010 | Additional push button hose reel switch. Location: [#LOC]. | $188 |
| 5100-0011 | Switch 12V for 120-240V (EA). Location: [#LOC]. | $434 |
| 5100-0014 | Air horns to be interlocked through the master warning switch. | $102 |
| 5100-0015 | Back-up alarm override momentary switch located at the cab dash. The switch will allow for overriding the back-up alarm and reset after transmission is shifted again. | $60 |
| 5100-0019 | Additional amber warning light override momentary switch located at the cab warning light switch panel. The switch will allow for overriding the rear additional amber warning lights and reset after ignition is turned off. | $325 |
| 5100-0020 | Switch additional 12 volt/15 amp toggle. Location and function: Under driver side cab dash for master battery override. | $204 |
| 5100-0021 | Opticom switch wired through upper level warning switch. | $77 |
| 5100-0022 | Push-button hose reel switch. Location: [#LOC]. | $188 |
| 5100-0029 | Stirrup style hose reel switch. Location: [#LOC]. | $188 |
| 5100-0036 | Additional programming instructions: [#LOC]. | $126 |
| 5100-0038 | Hose Reel rewind switch located in rubrail. | $96 |
| 5100-0039 | Foot switch(es) mounted on a 45 degree bracket. | $83 |
| 5100-0042 | Ramsey control with 3' cord for cab tilt in addition to standard toggle. Red/Black weatherproof push buttons at end of cord. Location of switch plug-in: [#LOC]. | $378 |
| 5100-0044 | Rear cab heater switch. Function and location: [#LOC]. | $204 |
| 5100-0045 | Thermostatic controls for pump compt heaters. Thermostat set at freezing temp. | $256 |
| 5100-0046 | Cut-off switch for Q2B main power. Switch to be accessible from driver's seat. | $276 |
| 5100-0047 | Switch household 110V w/ weaterproof cover. Location and function: cab mounted next to air compressor for 120V air compressor | $204 |
| 5100-0048 | Magnetic door ajar switches IPO std for all body compt doors. | $735 |
| 5100-0049 | Ramsey control with 8' cord for cab tilt in addition to standard toggle. Red/Black weatherproof push buttons at end of cord. Location of switch plug-in: [#LOC]. | $378 |
| 5100-0050 | Push button test switch for tank or foam level gauge push button wired "hot" to batteries to allow checking tank level in fire station without having to power up truck electrical system. Located on operator pump panel. | $353 |
| 5100-0055 | Switch for hydraulic gen to be located on officer side overhead console IPOS. | $126 |
| 5100-0056 | Hose deployment switch in front bumper tray. Includes hinged plate on bottom of bumper tray with switch on floor and indicator light on pump panel. Requires tray without slats. Location: [#LOC]. | $598 |
| 5100-0058 | Master battery disconnect switch. Location: driver seat riser ipo riser door. Includes overlay plate. | $486 |
| 5100-0060 | Switch for 12V quartz lights to be located on officer side overhead console IPOS. | $126 |
| 5100-0061 | Door ajar alarm override momentary switch located at the cab dash. The switch will allow for overriding the door ajar alarm and reset after transmission is shifted again. | $204 |

| Item No. | Description | |
|---|---|---|
| 5100-0063 | Ramsey control with 10' cord for cab tilt. Red/Black weatherproof push buttons at end of cord. Location of switch plug-in: next to manual cab tilt pump | $378 |
| 5100-0072 | Locate Q2B brake in officer side overhead console IPO standard location of driver side overhead console. | $58 |
| 5100-0075 | Jump stud disconnect switch. Location: driver side of body adjacent to connectors. Includes overlay plate. | $486 |
| 5100-0087 | Ramsey control plug-in for cab tilt in addition to standard toggle. Does not include tether controller. Location: [#LOC]. | $213 |
| 5100-0088 | Linemaster Twin 491-S foot switch to control air horns and Q2B located [#LOC]. | $385 |
| 5100-0089 | Foot switch to control electric fire bell located [#LOC]. | $120 |
| 5100-0090 | Foot switch to control Scream Eagle siren located [#LOC]. | $120 |
| 5100-0091 | Switch 12V for 110-240V (EA). Location: cab switch panel for rear body quartz light(s). | $434 |
| 5100-0093 | Master battery disconnect switch. Location: driver seat riser facing outward behind access door. | $530 |
| 5100-0094 | Ramsey control with 15' cord for cab tilt in addition to standard toggle. Red/Black weatherproof push buttons at end of cord. Location of switch plug-in: [#LOC]. | $378 |
| 5100-0095 | Switching controlled through the Multiplex display for 120-240V devices (EA). The 120-240V Multiplex switching utility shall be used for: [#LOC]. | $434 |
| 5100-0098 | Switch additional rocker lock-out safety style. Location and function: [#LOC]. | $204 |
| 5100-0099 | Momentary rocker switch for the Federal Rumbler (secondary siren) located on the driver and officer side overhead panels. The switches will allow for overriding the Federal Signal Rumbler siren and reset after ignition is turned off. | $325 |
| 5100-0100 | Switch additional (2) position shall be installed and properly labeled to enable operator to activate the OEM traffic horn or air horn. The switch shall be located: rear of body driver side approximately 65" above ground level. | $204 |
| 5100-0102 | A cab interior audible alarm and hazard light. The light shall be blue in color and 2" diameter The alarm and hazard light shall be wired to the light tower to provide a clear indicator of when the light tower is raised or not in the bedded position. The light shall be mounted in the vicinity of the door ajar hazard light. | $151 |
| 5100-0103 | Locate Q2B brake on lower dash between touch screens IPOS. | $58 |
| 5100-0104 | Air horn switch at rear body. Switch to be labeled ''Air Horn''. Location: driver side rear of body approx. eye level (if applicable). | $143 |
| 5100-0105 | Switch momentary. Head lights running lights and tail lights (on with ignition) override momentary switch located at the cab dash. The switch will allow for overriding the head lights running lights and tail lights (turning them off momentarily) after the ignition has been turned on. | $204 |
| 5100-0106 | Thermostatic control for compartment heater. Thermostat set at 60 degrees Fahrenheit to prevent freezing. Location: [#LOC]. | $131 |
| 5100-0107 | Cut-off switch for Q2B main power. Switch to be accessible from officer's seat. | $276 |
| 5100-0108 | Switch circuit three way 12V for 120-240V (EA). Includes (1) additional 12V for 120-240V switch. An additional switch required for more than two locations. Location: [#LOC]. | $434 |
| 5100-0109 | Audible alarm to sound when water level is below 1/4 tank remaining. | $289 |
| 5100-0112 | Ramsey control on officer side cab dash with 3' cord to operate Q2B and air horns. Red switch Q2B Black air horns. | $356 |
| 5100-0115 | Monarch control for cab tilt in place of standard toggle. | $415 |
| 5100-0116 | Weldon 4-button V-MUX switch module. Location [#LOC]. | $415 |
| 5100-0117 | Switch additional momentary 12 volt/15 amp. Location and function: [#LOC]. | $204 |
| 5100-0118 | Door ajar indicator switch for each SCBA air bottle storage compartment door on body wired to "Door Open" indicator inside cab. Switches as optioned are in addition to standard SCBA bottle retainer straps. | $57 |
| 5100-0119 | Rear cab heater Eaton guarded switch. Function and location: [#LOC]. | $204 |
| 5100-0120 | Switch additional guarded toggle. Location and Function: driver side rear of body for rear flood lights. | $204 |
| 5100-0125 | Door ajar indicator switches for all SCBA air bottle storage compartment doors on cab wired to "Door Open" indicator inside cab. | $57 |
| 5100-0127 | Switch panel three way. Includes (7) additional switches. An additional switch required for more than two locations. Location: L1 adjacent to breaker box for front brow lights driver 120V cab/body scene lights officer 120V cab/body scene lights driver 12V cab/body scene lights officer cab/body 12V scene lights and rear 12V scene lights. | $1,181 |
| 5100-0128 | Red flip cover for toggle switch. Location: [#LOC]. | $19 |
| 5100-0130 | Weatherproof Eaton rocker switches on pump panel ipo toggle switches. | $233 |
| 5100-0131 | Foot switch(es) mounted on a 30 degree bracket. | $83 |

| Item No. | Description | |
|---|---|---|
| 5100-0132 | Switch additional through multiplex display. Function: [#LOC] | $91 |
| 5100-0133 | Switch. Location and function: [#LOC]. | $204 |
| 5100-0135 | Cole Hersee lock out device for master battery switch. Model CLH24505. | $87 |
| 5100-0136 | Locate Q2B brake in officer side switch panel IPO standard location. | $58 |
| 5100-0138 | Push-button hose reel switch on 10' tether located in L1 rearward wall. | $295 |
| 5100-0139 | Foot switch Linemaster model 632S to control electric siren located [#LOC]. Includes 25 degree diamond plate bracket. | $120 |
| 5100-0140 | Ramsey control with 3' cord for cab tilt in place of standard toggle. Red/Black weatherproof push buttons at end of cord. Includes receptacle with cover. Location of receptacle: [#LOC]. | $378 |
| 5100-0141 | Ramsey control with 6' cord for cab tilt in addition to standard toggle. Red/Black weatherproof push buttons at end of cord. Location of switch plug-in: [#LOC]. | $378 |
| 5100-0142 | Switch door ajar additional. Location: front bumper raised lid. | $204 |
| 5100-0143 | Switch additional ladder climbing lights in cab accessible to driver. Requires Engineering approval. | $316 |
| 5100-0144 | Magnetic door ajar switch IPO std for [#LOC] body compt door. | $105 |
| 5100-0145 | Additional driver side overhead switches in addition to vista screen operations. See specifications. | $2,645 |
| 5100-0147 | Ramsey control with 3' cord for cab tilt in addition to standard toggle. Red/Black weatherproof push buttons at end of cord hardwired adjacent to standard toggle. | $378 |
| 5100-0149 | Switch lever 120V shoreline disconnect. Location: Adjacent to shoreline receptacle. | $434 |
| 5100-0150 | Hose Reel rewind switch located in pump module rearward in rubrail. One (1) left and one (1) right side. | $188 |
| 5100-0152 | Locate Q2B brake through multiplex display(s) IPOS. | $58 |
| 5100-0153 | Locate Q2B brake on center lower dash panel IPO standard location. | $58 |
| 5100-0154 | Push-button hose reel switch on 10' tether located in R1 rearward wall. | $295 |
| 5110-0003 | High impact orange ABS plastic handheld spotlight SL-45 Location: [#LOC]. | $216 |
| 5110-0004 | Alternating flasher for headlights. | $347 |
| 5110-0005 | Pre-wire for trailer hitch. Includes stop left turn right turn marker and ground wires. Does not include connector. | $245 |
| 5110-0007 | Audible indicator in cab with rear button. The rear button will be located on the driver's side at the rear behind the hand rail (if applicable). | $354 |
| 5110-0008 | Audible indicator in cab with rear buttons. The rear buttons will be located one each side at the rear behind the hand rail (if equipped). | $391 |
| 5110-0009 | Clock Digital 12/24 Waterproof mounted in cab officer's overhead dash. | $643 |
| 5110-0011 | Vehicle Information Control Center for E-One Multiplexed trucks located on Driver's Side. | $6,104 |
| 5110-0012 | Vehicle Information Control Center for E-One Multiplexed trucks located on Officer's Side. | $6,104 |
| 5110-0014 | Vehicle Information Control Center for E-One Multiplexed trucks located on Officer's Side. Display Only No computer. | $2,592 |
| 5110-0015 | Vehicle Information Control Center for E-One Multiplexed trucks located at center of engine cover mounted on swivel bracket. | $6,486 |
| 5110-0016 | Emi Testing and Certification | $4,144 |
| 5110-0017 | Back-up alarm 97 dB. | $106 |
| 5110-0018 | 12 volt 12 gauge constant hot lead (24" long) with ground wire. Location: [#LOC]. | $83 |
| 5110-0019 | Audible indicator in cab with rear button. Locate (1) buzzer in tractor cab wired to foot switch on right side of tiller cab. (1) buzzer in tiller cab wired to push button switch in tractor cab center of dash. Includes indicator lights wired to each buzzer. Provide labels that read: 1-STOP 2-GO 3-BACKUP in both cabs. | $1,016 |
| 5110-0020 | Starter safety circuit for tillerman cab. Locate on the driver side floor of tillerman cab. Includes service override switch under cab dash within easy reach of driver position. | $604 |
| 5110-0024 | Back up alarm Grote 107 dB(A). | $271 |
| 5110-0025 | Back up horn system. Includes 12v independent horn (NAPA 730-1047) below officer's side dash 12v independent horn (NAPA 730-1047) at rear of body and Ramsey control switch with 25' tether at rear of body. | $847 |
| 5110-0026 | 12 volt 12 gauge wired through ignition lead (24" long) with ground wire. Location: [#LOC]. | $83 |
| 5110-0028 | Code3 model 700 flasher for alternating headlights. | $340 |
| 5110-0032 | Clock digital 12/24 waterproof mounted in [#LOC]. | $643 |
| 5110-0037 | Additional wiring instructions: [#LOC]. | $374 |
| 5110-0040 | Indicator light. Color: [#COL]. Location and function: [#LOC]. | $118 |
| 5110-0042 | Trailer wiring and connector for 2009 NFPA 1901 Type I Type II or Type III trailer. Includes model 12-907 connector on body. Stop/turn/tail circuits shall be connected remaining wires to be coiled up for future use. Trailer end 12-906 shipped loose. | $472 |

| Item No. | Description | |
|---|---|---|
| 5110-0043 | Back-up alarm Federal Reactor model 210350 self-adjusting. | $184 |
| 5110-0044 | ABS cover for multiplex PDMs' located in the pump module. | $97 |
| 5110-0045 | Radio interface cable-run a 7-conductor 20 gauge wiring (578865) from the pump panel microphone box to the center overehead area leave a 30" coil of wire at each end. | $571 |
| 5110-0052 | 12V power distribution module. Includes (6) battery hot and (6) switched hot circuits. 100 amps max (IATS). Location: [#LOC]. | $314 |
| 5110-0060 | 12 volt 4 gauge constant hot lead (24" long) with ground wire. Location: [#LOC]. | $247 |
| 5110-0065 | Lighted bumper guide (PR). Bores model 848211 located (1) each side of front bumper extension. | $418 |
| 5110-0067 | Back up alarm Preco 97 dB(A) warble tone. | $275 |
| 5110-0068 | Handheld flashlight orange Streamlight Litebox flashlight with vehicle mount system. Location: [#LOC]. | $194 |
| 5110-0069 | Back up alarm ECCO model 410 97 dB(A) grommet mount. | $212 |
| 5110-0070 | Vehicle Information Control Center for E-One Multiplexed trucks swivel pedestal mount located at center between driver and officer. Mid engine cabs only. | $6,486 |
| 5110-0079 | Back up alarm Ecco model SA917 87-112dB. | $241 |
| 5110-0087 | Tekonsha model Prodigy 2 trailer brake controls wired to connector. Control located in cab accessible to driver. Requires 9-pin connector. | $900 |
| 5110-0088 | Lighted bumper guide (PR) with angled support brackets. Bores model 848211 located (1) each side of front bumper extension. | $540 |
| 5110-0089 | Back-up alarm Ecco model 575 107dB. | $178 |
| 5110-0090 | Breaker box grounding cable. 10' 2Ga cable attached to ground side of breaker box. Includes clamp on end of cable for use with aerial ground pad. | $237 |
| 5110-0094 | Wiring instructions: Dedicated ground wire for 12V distribution module located behind officer seat. | $133 |
| 5110-0109 | Indicator light Weldon 9186-2300. Color: [#COL]. Location and function: [#LOC]. | $118 |
| 5110-0112 | Back up alarm Preco model 1040. | $183 |
| 5110-0117 | ATIMS vehicle "Brick" system. | $5,378 |
| 5110-0124 | Audible indicator in cab with rear buttons. The rear buttons will be located [#LOC]. | $391 |
| 5110-0132 | Indicator light. Color: Green. Location and function: driver side overhead for jake brake "on". | $118 |
| 5110-0133 | 12 volt 10 gauge constant hot lead (24" long) with ground wire. Location: [#LOC]. | $96 |
| 5110-0138 | Regen indicator light with warning tag . Whelen 500 series TIR6 amber light located in rubrail above exhaust end. Includes warning tag to read "High Exhaust Heat When Flashing". Light to be wired through indicator in cab and park brake. | $317 |
| 5110-0139 | 12 volt 14 gauge wired through ignition lead (36" long) with ground wire. Location: [#LOC]. | $98 |
| 5110-0140 | 12 volt 10 gauge wired through ignition lead terminated in a junction box with ground wire. Location: [#LOC]. | $98 |
| 5110-0145 | Pre-Wiring for trailer hitch should include a hot 12vdc and back-up light wire at the connector and a wire from the connector to the cab for future electric brake unit in cab. In the cab there should be a wire labeled for brake lights to connect to future electric brake unit. Connector sold separately. | $245 |
| 5110-0146 | Cole-Hersee trailer tail light converter model 48000. Trailer connector sold separately. | $321 |
| 5110-0149 | Generator power shall be supplied to the command desk area. One (1) 12/3 cable shall supply 20 amps with 10' of wire coiled at the command desk area. The wires shall be clearly marked to identify them as 110V/20A generator power. | $355 |
| 5110-0150 | Shoreline power shall be supplied to the command desk area. One (1) 12/3 cable shall supply 20 amps with 10' of wire coiled at the command desk area. The wires shall be clearly marked to identify them as 110V/20A shoreline power. | $355 |
| 5110-0153 | 12V power distribution module. Includes (6) battery hot and (6) switched hot circuits. 100 amps max (IATS). Includes circuit breakers ipo fuses. Location: [#LOC]. | $314 |
| 5110-0154 | Dow Corning 738 white electrical sealant. Apply to all exposed electrical connections. | $338 |
| 5110-0155 | Customer supplied handheld spotlight SL-45 shall be mounted in place. Location: [#LOC]. | $177 |
| 5110-0158 | 12 volt 12 gauge lead (24" long) with ground wire wired to battery saver. Location: [#LOC]. | $83 |
| 5110-0162 | Wiring instructions: Dedicated ground wire for 12V distribution module located at driver and officer 3x3 post. | $133 |
| 5110-0169 | Aluminum smooth plate cover for foam controller shall be located on back of controller. | $206 |
| 5110-0173 | LINE-X package for miscellaneous parts mounted on the body: Includes aerial style or similar brackets used for beacon lights camera shield license plate bracket traffic advisor box (non-recessed only) fabricated shield over traffic advisor fabricated light boxes and other brackets used for mounting scene and warning lights stirrup style switch as applicable. | $258 |
| 5110-0174 | Back up alarm Hella model A1399 SA-BBS-97. | $300 |

| Item No. | Description | |
|---|---|---|
| 5110-0179 | Durabak package for miscellaneous parts mounted on the body: Includes aerial style or similar brackets used for beacon lights camera shield license plate bracket traffic advisor box (non-recessed only) fabricated shield over traffic advisor fabricated light boxes and other brackets used for mounting scene and warning lights stirrup style switch as applicable. | $258 |
| 5110-0180 | Collision Avoidance Systems model CAS-4HW rear obstacle detection and proximity system. Includes 4 sensors at rear of vehicle and speaker in cab. | $1,908 |
| 5110-0185 | 12 volt 12 gauge constant hot lead (24" long) with ground wire and circuit breaker. Location: [#LOC]. | $137 |
| 5110-0187 | Pre-wire for customer supplied electric fire bell. Includes push button activation switch on center cab dash offset to officer side. | $344 |
| 5110-0188 | Handheld flashlight orange Streamlight Knucklehead Haz-LO LED flashlight with charger. Location: [#LOC]. | $365 |
| 5110-0191 | 12V power distribution module. Includes (12) battery hot circuits. 100 amps max (IATS). Location: [#LOC]. | $314 |
| 5110-0192 | 12V power distribution module. Includes (12) switched hot circuits. 100 amps max (IATS). Location: [#LOC]. | $314 |
| 5130-0000 | Cord reel 150 feet of 12/3 black cord installed on the [#LOC] with an electric rewind. | $1,859 |
| 5130-0001 | Cord reel electric with 200' of 10/3 black cable. Locate [#LOC]. | $2,195 |
| 5130-0002 | Cord reel electric with 200' of 10/3 yellow cable. Location(s): [#LOC]. | $2,478 |
| 5130-0003 | Cord reel electric with 200' of 10/4 black cable. Location: [#LOC]. | $2,471 |
| 5130-0004 | Cord reel electric with 200' of 10/4 yellow cable. Location [#LOC]. | $3,204 |
| 5130-0005 | Ground reel with 20' of cable and 3' rod to be used for grounding unit while using the generator. | $421 |
| 5130-0006 | Rollers for cord reel mounted on reel. Locate: [#LOC]. | $358 |
| 5130-0007 | Cord connector. Daniel Woodhead 3 wire NEMA 5-15 straight blade female located on cord for reel in [#LOC]. | $84 |
| 5130-0008 | Cord connector. Daniel Woodhead 3 wire NEMA L5-15 twist lock female located on cord for reel in [#LOC] | $86 |
| 5130-0009 | Cord connector. Daniel Woodhead 3 wire NEMA L5-20 twist lock female located on cord for reel in [#LOC]. | $117 |
| 5130-0010 | Cord connector. Daniel Woodhead 4 wire NEMA L14-20 twist lock female located on cord for reel in [#LOC]. | $117 |
| 5130-0011 | Cord connector. Daniel Woodhead 3 wire NEMA L6-20 twist lock female located on cord for reel in [#LOC] | $117 |
| 5130-0012 | Junction box Circle-D with four (4) 3-wire NEMA L5-15 110 volt 15 amp twist lock receptacles. Located on cord for reel in [#LOC]. | $756 |
| 5130-0013 | Junction box Circle-D with four (4) 3-wire NEMA L5-20 110 volt 20 amp twist lock receptacles. Located on cord for reel in [#LOC]. | $756 |
| 5130-0014 | Circle D wall/floor mounting box. Mount at final or ship loose (customer preference). For use with reel located in or on [#LOC]. | $149 |
| 5130-0015 | Junction box Circle-D with two (2) 15 amp straight blade and two (2) 20 amp twist lock receptacles. Located on cord for reel in [#LOC]. | $955 |
| 5130-0016 | Junction box Circle-D with all twist lock 2-120V and 2-240V outlets. Located on cord for reel in [#LOC]. | $936 |
| 5130-0017 | Junction box Woodhead with four (4) NEMA L5-15 110 Volt 15 Amp twist lock receptacles. Located on cord for reel in [#LOC]. | $1,503 |
| 5130-0018 | Junction box Daniel Woodhead with four (4) NEMA L5-20 110 volt 20 amp twist lock receptacles. Located on cord for reel in [#LOC]. | $1,202 |
| 5130-0022 | Rollers for cord reel mounted through panel. Location(s): [#LOC]. | $358 |
| 5130-0024 | Electric cord reel rewind switch. Switch located [#LOC]. | $120 |
| 5130-0026 | Cord connector. Fire Power 3 wire 20A/110V female located on cord for reel in [#LOC]. | $606 |
| 5130-0027 | Cord connector. Duraline 4 wire 20A/220V female located on cord for reel in [#LOC]. | $159 |
| 5130-0028 | Rollers captive for cord reel mounted on reel. | $358 |
| 5130-0030 | Junction box Circle-D with one (1) straight blade and three (3) twist lock receptacles. Located on cord for reel in [#LOC]. | $955 |
| 5130-0031 | Cord reel electric/manual back-up with 200' of 10/3 black cable. Crank handle mounted next to reel. Locate [#LOC] | $2,636 |
| 5130-0032 | Cord reel electric with 150' of 10/4 yellow cable. Location [#LOC] | $3,204 |
| 5130-0033 | Junction box Circle D with four (4) 3-wire NEMA 5-15 110 volt 15 amp straight blade receptacles. Located on cord for reel in [#LOC]. | $756 |

| Item No. | Description | |
|---|---|---|
| 5130-0034 | Cord reel Akron electric with 200' of 10/3 yellow cable. Location(s): [#LOC]. | $2,365 |
| 5130-0035 | Junction box Circle-D with (3) L5-15 and (1) L5-20 110Volt twist lock receptacles. Located on cord for reel in [#LOC]. | $756 |
| 5130-0036 | Diamond plate cord reel cover over reel. Use rollers provided with reel on cover IPO E-One supplied if applicable. Location: [#LOC] | $626 |
| 5130-0037 | Cord reel Akron electric with 200' of 10/4 yellow cable. Location(s): [#LOC] | $3,095 |
| 5130-0038 | Junction box Circle-D with (2) L5-20 twist lock and (2) 5-20 110Volt straight blade duplex receptacles. Located on cord for reel in [#LOC]. | $756 |
| 5130-0039 | Bracket for rollers. A support bracket for rollers shall be provided up high at compt opening for reel in [#LOC]. | $272 |
| 5130-0040 | Hannay PWM (Pulse Width Modulator) control for reel. Mounted next to switch for cord reel in [#LOC]. | $674 |
| 5130-0041 | Cord reel rollers bracket mounted on top of [#LOC]. | $358 |
| 5130-0042 | Junction box Circle-D with four (4) 3-wire Nema 5-20 110Volt 20 Amp duplex receptacles. Located on cord for reel in [#LOC]. | $838 |
| 5130-0043 | Cord reel Akron electric with rear mounted motor. Includes 200' of 10/3 yellow cable. Location(s): [#LOC]. | $2,695 |
| 5130-0044 | Junction box Akron with (2) 5-20 125v 20 Amp duplex recepts and (2) L5-20 125v 20 Amp twist lock recepts. Located on cord for reel in [#LOC]. | $596 |
| 5130-0045 | Akron model EJB-VMT-TP mounting box. Locate box for use with reel in or on [#LOC]. | $291 |
| 5130-0046 | Junction box Circle-D with one (1) 5-20 straight blade and three (3) L5-20 twist lock receptacles. Box wired as 240v with individual circuit breakers on box. Located on cord for reel in [#LOC]. | $955 |
| 5130-0048 | Junction box Circle-D with (2) NEMA 5-20 120V GFCI duplex and (2) NEMA L6-20 220V twist lock receptacles. Located on cord for reel in [#LOC]. | $955 |
| 5130-0049 | Cord reel electric for 200' of 10/3 cable. Cable not included. Location(s): [#LOC] | $2,217 |
| 5130-0051 | Junction box Circle-D with (2) 5-15 straight blade and (2) L5-15 twist lock receptacles. Box to have individual circuit breakers on box. Located on cord for reel in [#LOC]. | $955 |
| 5130-0054 | Cord reel electric with 200' of 8/3 black cable. Locate [#LOC] | $3,759 |
| 5130-0055 | Rollers for cord reel mounted on support bracket. Location(s): [#LOC] | $358 |
| 5130-0056 | Junction box Woodhead with (3) NEMA L5-15 110 Volt 15 Amp twist lock receptacles and (1) NEMA 5-20 110 Volt 20 Amp household receptacle. Located on cord for reel in [#LOC]. | $1,503 |
| 5130-0057 | Mounting box for Woodhead junction box. Mount at final or ship loose (customer preference). For use with reel located in or on [#LOC]. | $272 |
| 5130-0058 | Junction box Akron with four (4) 3-wire NEMA L5-20 110 volt 20 amp twist lock receptacles. Located [#LOC]. | $596 |
| 5130-0059 | Junction box Circle-D with four (4) FirePower FP11 110Volt 20 Amp receptacles. Located on cord for reel in [#LOC]. | $1,233 |
| 5130-0061 | Cord reel electric with 250' of 10/3 black cable. Locate [#LOC]. | $2,589 |
| 5130-0062 | Junction box Circle-D with (2) 5-20 straight blade and (2) twist lock receptacles; (1) L5-20 and (1) L5-15. Located on cord for reel in [#LOC]. | $955 |
| 5130-0063 | Cord reel electric with 200' of 12/3 black cable. Locate [#LOC]. | $2,589 |
| 5130-0067 | Junction box Akron with (4) 5-20-GFCI 125v 20 Amp duplex recepts. Includes 12" pigtail with L14-20 connector and rubber feet. Located on cord for reel in [#LOC]. | $596 |
| 5130-0069 | Cord reel electric with 250' of 10/3 yellow cable. Locate [#LOC]. | $2,943 |
| 5130-0070 | Cord connector. Hubbell 4 wire NEMA L14-20 twist lock female located on cord for reel in [#LOC] | $117 |
| 5130-0073 | Cord reel electric low profile with 200' of 10/3 yellow cable. Location(s): [#LOC]. | $3,140 |
| 5130-0079 | Cord reel electric with 150' of 10/3 yellow cable. Location(s): [#LOC]. | $2,274 |
| 5130-0080 | Junction box Circle-D with four (4) 3-wire NEMA L5-20 110 volt 20 amp GFCI twist lock receptacles. Located on cord for reel in [#LOC]. | $955 |
| 5130-0081 | Cord reel electric model ECR 1620-17-18 with 200' of 10/4 yellow cable. Location [#LOC]. | $3,204 |
| 5130-0082 | Cord connector. Daniel Woodhead 3 wire NEMA L5-30 twist lock female located on cord for reel in [#LOC]. | $164 |
| 5130-0083 | Slideout roller assembly for reel located in [#LOC]. | $996 |
| 5130-0084 | Junction box Circle-D with one (1) 15 amp straight blade and three (3) 15 amp twist lock receptacles. Located on cord for reel in [#LOC]. | $955 |
| 5130-0087 | Cord connector. Daniel Woodhead 4 wire NEMA L14-30 twist lock female located on cord for reel in [#LOC]. | $164 |
| 5130-0088 | Junction box Woodhead with two (2) NEMA L5-20 110V 20A twist lock and two (2) NEMA 5-20 110V 20A duplex receptacles. Located on cord for reel in [#LOC]. | $1,365 |

| Item No. | Description | |
|---|---|---|
| 5130-0089 | Swing out roller assembly for cable reel. Roller is Hannay Reels w/ 2.5" opening. Location: [#LOC] | $358 |
| 5130-0090 | Junction box Akron with (4) 5-15 120v 15 Amp duplex recepts. Located on cord for reel in [#LOC]. | $596 |
| 5130-0094 | Cord reel electric with 200' of 10/3 black cable model ELFCR1622-14-16. Locate [#LOC]. | $2,195 |
| 5130-0095 | Cord reel Akron electric low profile with 200' of 10/3 black cable with rollers and cord stop. Location(s): [#LOC]. | $2,832 |
| 5130-0098 | Cord reel Akron electric low profile with 200' of 10/3 yellow cable with rollers and cord stop. Location(s): [#LOC]. | $3,126 |
| 5130-0101 | Cord reel electric with 150' of 10/4 yellow cable. Reel to include strap (Comet) brake to provide drag pressure to reel axle. Location [#LOC] | $3,284 |
| 5130-0102 | Junction box Circle-D with four (4) 3-wire 120Volt 20 Amp Hubbel model HBL7310B twist lock receptacles. Located on cord for reel in [#LOC]. | $955 |
| 5130-0103 | Junction box Circle-D with four (4) 3-wire NEMA L5-20 110 volt 20 amp GFCI twist lock receptacles with 220V feed. Located on cord for reel in [#LOC]. | $955 |
| 5130-0104 | Cord reel electric with 150' of 10/4 black cable. Location: [#LOC]. | $2,021 |
| 5130-0105 | Cord reel electric CMW 6020 with 200' of 10/3 yellow cord. Location: [#LOC]. | $5,996 |
| 5130-0106 | Cord reel Akron electric low profile with 200' of 10/3 black cable with rollers and cord stop. Location(s): [#LOC]. | $2,832 |
| 5130-0107 | Cord reel electric with 200' of 12/3 yellow cable. Locate [#LOC]. | $2,659 |
| 5130-0108 | Cord reel electric with 150' of 10/4 yellow cable. Reel has 3 conductor cover IPO 4 (for narrower reel). Location: [#LOC]. | $3,204 |
| 5130-0109 | Junction box Circle D with four (4) 3-wire 20 amp receptacles two (2) twist lock NEMA L 5-20 and two (2) straight blade NEMA 5-20 receptacles. Located on cord for reel in [#LOC]. | $815 |
| 5130-0111 | Stirrup style cord reel rewind switch. Location: [#LOC]. | $188 |
| 5130-0112 | Junction box Akron with (3) NEMA L5-20 GFCI twistlock and (1) NEMA L6-20 220V twist lock receptacle. Located on cord for reel in [#LOC]. | $698 |
| 5130-0114 | Rollers hydraulic/air reel rollers mounted through panel. Location(s): [#LOC]. | $358 |
| 5130-0115 | Junction box Akron with (2) NEMA L5-15 GFCI twistlock and (2) NEMA L14-20 120V/240V twist lock receptacle. Located on cord for reel in [#LOC]. | $698 |
| 5130-0116 | Optional Comet (friction) brake for Hannay cord reel (EA). | $75 |
| 5130-0120 | Cord reel electric painted black from manufacturer with 200' of 10/3 black cable. Locate [#LOC]. | $2,195 |
| 5130-0121 | Junction box Akron with four (4) 3-wire NEMA L5-15 110 volt 15 amp twist lock receptacles. Located [#LOC]. | $596 |
| 5130-0122 | Cord connector. Hubbell 3 wire NEMA L5-15 twist lock female with yellow seal-tite cover located on cord for reel in [#LOC]. | $136 |
| 5130-0123 | Smooth plate cord reel cover with black Durabak finish over reel. Use rollers provided with reel on cover IPO E-One supplied if applicable. Location: [#LOC] | $752 |
| 5130-0124 | Junction box Circle-D with (3) L5-20 twist lock and (1) 5-20 110V straight blade duplex receptacles. Located on cord for reel in [#LOC]. | $756 |
| 5130-0125 | Cord reel Hannay electric low profile with 200' of 10/3 black cable. Locate [#LOC]. | $2,832 |
| 5130-0126 | Junction box Circle-D with (1) L5-20 twist lock and (3) 5-15 110Volt straight blade duplex receptacles. Located on cord for reel in [#LOC]. | $756 |
| 5130-0127 | Cord reel electric with 175' of 10/3 yellow cable. Location [#LOC]. | $3,204 |
| 5130-0131 | Cord reel electric Hannay model 1614-17-18 with 150' of 10/3 black cable. Location(s): [#LOC]. | $2,003 |
| 5130-0132 | Cord reel electric Hannay model 1614-17-18 with 150' of 10/3 yellow cable. Location(s): [#LOC]. | $2,085 |
| 5130-0133 | Cord reel electric Hannay model 1615-17-18 with 150' of 10/3 black cable. Location(s): [#LOC]. | $2,177 |
| 5130-0137 | Cord reel electric low profile with 200' of 10/3 black cable; Hannay model ELFCR1636-10-11-6. Locate [#LOC]. | $2,340 |
| 5130-0139 | Junction box Circle-D with two (2) 15 amp twist lock receptacles and two (2) 20 amp twist lock receptacles. Located on cord for reel in [#LOC]. | $955 |
| 5130-0140 | Cord reel electric low profile with 200' of 10/3 yellow cable; Hannay model ELFCR1636-10-11-6. Locate [#LOC]. | $2,633 |
| 5130-0141 | Junction box Circle-D with two (2) 15 amp straight blade and two (2) 15 amp twist lock receptacles. Located on cord for reel in [#LOC]. | $955 |
| 5130-0142 | Air reel rewind switch. Switch located [#LOC]. | $120 |
| 5130-0143 | Junction box Woodhead with (1) NEMA 5-15 110V GFCI duplex receptacle (2) NEMA L5-20 110V GFCI twist lock receptacles and (1) NEMA L6-20 220V twist lock receptacle. Located on cord for reel in [#LOC]. | $1,695 |

| Item No. | Description | |
|---|---|---|
| 5130-0146 | Junction box Circle-D with two (2) 15 amp duplex receptacles and two (2) 20 amp duplex receptacles. Located on cord for reel in [#LOC]. | $955 |
| 5130-0150 | Junction box Woodhead with (2) NEMA L5-20 110 Volt 20 Amp twist lock receptacles and (2) NEMA 5-20 110 Volt 20 Amp household receptacle. Located on cord for reel in [#LOC]. | $1,503 |
| 5130-0151 | Cord reel low profile electric with 200' of 10/4 yellow cable. Location: [#LOC]. | $3,377 |
| 5150-0003 | Weldon auxiliary turn signal model 9186-8560 (PR). Location: [#LOC] | $212 |
| 5150-0006 | Whelen 600 series LED horizontal mount tail lights. Includes LED stop/tail arrow turn and halogen back-up lights with horizontal Cast 3 housing and weatherproof connectors. | $1,375 |
| 5150-0007 | Whelen 600 series LED vertical mount tail lights. Includes LED stop/tail arrow turn and halogen back-up lights with vertical Cast 3 housing and weatherproof connectors. | $1,343 |
| 5150-0008 | Whelen 600 series LED vertical mount tail lights. Includes LED stop/tail arrow turn and halogen back-up lights with vertical Cast 4 housing and weatherproof connectors. | $1,643 |
| 5150-0010 | Whelen 600 series LED horizontal mount tail lights. Includes LED stop/tail turn and halogen back-up lights. Available on G067 L193 and Q100/114 only. With weatherproof connectors. | $1,476 |
| 5150-0011 | Whelen 600 series LED vertical mount tail lights. Includes LED stop tail turn and halogen back-up lights with vertical Cast 3 housing and weatherproof connectors. | $1,447 |
| 5150-0012 | Whelen 600 series LED vertical mount tail lights. Includes LED stop/tail turn and halogen back-up lights with vertical Cast 4 housing and weatherproof connectors. | $1,542 |
| 5150-0013 | Whelen 600 series horizontal mount taillights. Includes incandescent stop/tail arrow turn and halogen backup light. Available on G067 and L193 only. With weatherproof connectors. | $648 |
| 5150-0015 | Whelen 600 series vertical mount taillights. Includes incandescent stop/tail arrow turn and halogen backup lights with vertical Cast 4 housing and weatherproof connectors. | $748 |
| 5150-0017 | License plate light LED with chrome housing located at the rear of the body. | $140 |
| 5150-0019 | Marker lights addtional red LED Trucklite Model 21 (PR). Location: [#LOC] | $180 |
| 5150-0020 | Weldon model 1010 LED / incandescent tail lights. Includes red LED stop/tail/turn and clear incandescent back-up. | $388 |
| 5150-0023 | Weldon Model 1010 LED / incandescent tail lights. Includes red LED stop/tail amber LED turn and clear incandescent back-up. | $564 |
| 5150-0026 | Marker light LED body/cab package. E-ONE custom cab with aerial ladder Mid-Mount platform or Bronto bodies only. | $1,465 |
| 5150-0028 | Marker light LED body/cab package. E-ONE custom cab with rear mount aerial platform bodies only. Includes (3) marker lights on front of platform. | $1,728 |
| 5150-0032 | Bracket license plate at rear of body. | $41 |
| 5150-0035 | Trucklite LED taillights. Includes 4" red LED stop/tail amber LED turn and clear incandescent backup. | $683 |
| 5150-0036 | Truck-Lite LED tail lights. Includes 4" red LED stop/tail amber LED turn and clear LED back-up. | $867 |
| 5150-0037 | Zico backing light (PR) with white pained housing model #ZQL-RV-H7614. Location: [#LOC]. | $407 |
| 5150-0039 | Marker lights Britax amber/red rubber housed mounted on the rear body corners angled down. | $305 |
| 5150-0042 | Federal Signal LED tail lights. Includes 4" diameter red LED stop/tail amber turn and LED clear back-up. | $589 |
| 5150-0050 | Zico backing lights (PR) with polished stainless steel housing model ZQL-SS-H7614. Location: [#LOC]. | $628 |
| 5150-0052 | Code 3 65STK4 vertical mount tail lights. Includes red LED stop/tail amber LED turn and white LED back-up lights. | $2,093 |
| 5150-0053 | Code 3 65PKG vertical mount tail lights. Includes red LED stop/tail amber arrow LED turn and white LED back-up lights. | $1,704 |
| 5150-0055 | Whelen 600 series LED horizontal mount tail lights. Includes LED stop/tail arrow turn and back-up lights with horizontal Cast 3 housing and weatherproof connectors. | $2,173 |
| 5150-0056 | Whelen 600 series LED vertical mount tail lights. Includes LED stop/tail arrow turn and back-up lights with vertical Cast 3 housing and weatherproof connectors. | $2,144 |
| 5150-0057 | Whelen 600 series LED vertical mount tail lights. Includes LED stop/tail arrow turn and back-up lights with vertical Cast 4 housing and weatherproof connectors. | $2,443 |
| 5150-0058 | Federal Signal QuadraFlare LED vertical mount tail lights. Includes LED stop/tail arrow turn and back-up lights with vertical Cast 4 housing and weatherproof connectors. | $1,340 |
| 5150-0059 | Federal Signal QuadraFlare LED vertical mount tail lights. Includes LED stop/tail arrow turn and back-up lights with vertical Cast 3 housing and weatherproof connectors. | $1,170 |
| 5150-0060 | Federal Signal QuadraFlare LED vertical mount tail lights. Includes LED stop/tail turn and back-up lights with vertical Cast 3 housing and weatherproof connectors. | $1,280 |
| 5150-0061 | Federal Signal QuadraFlare LED horizontal mount taillights. Includes LED stop/tail turn and backup lights with horizontal Cast 3 housing and weatherproof connectors. | $1,170 |

| Item No. | Description | |
|---|---|---|
| 5150-0062 | Federal Signal QuadraFlare LED horizontal mount taillights. Includes LED stop/tail arrow turn and backup lights with horizontal Cast 3 housing and weatherproof connectors. | $1,362 |
| 5150-0063 | Double chrome trim ring for Weldon 1010 tail lights (PR). | $283 |
| 5150-0065 | Marker light LED body/cab package. E-ONE custom cab with tiller aerial ladder body only. | $1,558 |
| 5150-0068 | Marker lights Britax LED amber/red rubber housed mounted on the rear body corners angled down. | $417 |
| 5150-0071 | Light Whelen model PSR00XRR LED (EA) red 3rd brake light. Location: [#LOC]. | $202 |
| 5150-0073 | Marker lights additional red LED Whelen Model 50R00MRR (PR). Location: [#LOC] | $259 |
| 5150-0074 | Marker lights additional amber LED Whelen Model 50A00MAR (PR). Location: [#LOC] | $259 |
| 5150-0075 | Whelen 600 series LED vertical mount taillights. Includes LED stop/tail arrow turn and backup lights with individual chrome flanges and weatherproof connectors. | $2,896 |
| 5150-0076 | Whelen 700 LED auxiliary chevron turn signal (PR) with 15 degree castings. Location: [#LOC] | $757 |
| 5150-0077 | Whelen 900 series LED tail lights. Includes LED stop/tail arrow turn and back-up lights with weatherproof connectors. | $5,223 |
| 5150-0078 | Truck-Lite model #35720 guards for front LED clearance lights on cab. | $96 |
| 5150-0080 | Weldon auxiliary turn signal model 9186-8580 LED (PR). Location: [#LOC]. | $289 |
| 5150-0081 | Light Whelen 500 model 5SR00XRR red LED 3rd brake light (ea). Location: [#LOC]. | $227 |
| 5150-0082 | Whelen 600 series LED vertical mount taillights. Includes LED stop/tail arrow turn in vertical Cast 3 housing with 900 series halogen backup lights down low and weatherproof connectors. | $1,785 |
| 5150-0086 | Marker light LED body/cab package. E-ONE custom cab with aerial ladder Mid-Mount platform or Bronto bodies only. Outer cab roof lights to be Weldon model 5060. | $1,465 |
| 5150-0091 | Whelen M6 series LED vertical mount tail lights. Includes LED stop/tail arrow turn and back-up lights with vertical 4 light housing and weatherproof connectors. | $1,700 |
| 5150-0098 | Truck-Lite auxiliary turn signal model 60117Y LED (PR) with model 60719 stainless steel cover. Location: [#LOC]. | $276 |
| 5150-0099 | LED marker light cab and body package. E-ONE custom cab and SS body vehicles. | $1,374 |
| 5150-0101 | Whelen M9 series LED taillights. Includes LED stop/tail arrow turn and backup lights with weatherproof connectors. | $3,567 |
| 5150-0102 | Whelen M6 series LED vertical mount tail lights. Includes LED stop/tail arrow turn and back-up lights with vertical 3 light housing and weatherproof connectors. | $1,562 |
| 5150-0120 | Whelen 600 LED auxiliary arrow turn signal (PR) with 15 degree castings. Location: [#LOC]. | $690 |
| 5150-0122 | Marker lights addtional red LED Trucklite Model 15 (PR). Location: [#LOC]. | $107 |
| 5150-0123 | Marker lights addtional amber LED Trucklite Model 15 (PR). Location: [#LOC]. | $107 |
| 5150-0124 | The amber LED marker light on each side front of body just in front of rear wheels shall be upgraded to an amber Trucklite LED clearance/auxiliary turn light IPOS (clearance only no turn). | $187 |
| 5150-0127 | Whelen M6 series LED vertical mount tail lights. Includes LED stop/tail arrow turn lights with vertical 3 light housing (PR) with M9LZC Super LED scene lights (PR) with chrome flanges and weatherproof connectors. | $2,666 |
| 5150-0129 | Whelen M6 series LED horizontal mount tail lights. Includes LED stop/tail arrow turn and back-up lights individually mounted with weatherproof connectors. | $1,562 |
| 5150-0130 | License plate light LED with chrome housing located at the rear of the body driver side down low. | $140 |
| 5150-0133 | License plate light LED with chrome housing located at the rear of the body below B1 entry door. | $140 |
| 5150-0134 | License plate light incandescent with chrome housing located at the rear of the body. | $140 |
| 5150-0147 | Whelen 600 series LED vertical mount tail lights. Includes LED stop/tail arrow turn and halogen back-up lights with individual chrome flanges and weatherproof connectors. | $2,097 |
| 5150-0148 | Bracket license plate at rear of body. Fabricated from .125" smooth plate aluminum painted job color. | $50 |
| 5150-0149 | License plate light incandescent with chrome housing located at the rear of the body below tailboard/body. | $58 |
| 5150-0150 | Weldon LED vertical mount tail lights. Includes LED stop taill turn and halogen back-up lights with vertical 4 housing and weatherproof connectors. | $1,968 |
| 5150-0152 | Federal Signal QuadraFlare LED vertical mount tail lights. Includes LED stop/tail arrow turn and back-up lights with individual chrome bezels and weatherproof connectors. | $1,112 |
| 5150-0154 | License plate light EON LED located at the rear of the body. | $117 |
| 5150-0155 | Whelen 600 series LED vertical mount taillights. Includes LED stop/tail arrow turn and backup lights with individual black flanges and weatherproof connectors. | $2,343 |
| 5150-0156 | Marker lights Britax model L428 LED amber/red rubber housed (PR). Location: [#LOC]. | $417 |
| 5150-0158 | Whelen M6 series LED vertical mount tail lights with clear lenses. Includes LED stop/tail arrow turn and back-up lights with vertical 4 light housing and weatherproof connectors. | $1,700 |

| Item No. | Description | |
|---|---|---|
| 5150-0159 | License plate light EON LED located on front bumper. | $117 |
| 5150-0160 | Marker lights Britax LED amber/red rubber housed mounted on the rear body corners angled up. | $417 |
| 5150-0161 | Weldon auxiliary turn signal and marker light model 9186-8580 LED (PR). Location: [#LOC]. | $289 |
| 5150-0162 | Weldon LED vertical mount tail lights. Includes LED stop taill turn and back-up lights with vertical 4 housing and weatherproof connectors. | $2,391 |
| 5150-0163 | Whelen M6 series LED vertical mount tail lights. Includes LED stop/tail arrow turn and back-up lights individually mounted with weatherproof connectors. | $1,562 |
| 5150-0165 | Marker light LED body/cab package TecNiq. E-ONE custom cab with rear mount aerial platform bodies only. Includes (3) marker lights on front of platform. | $1,728 |
| 5150-0166 | Light Whelen M6 red LED 3rd brake light (ea). Location: [#LOC] | $284 |
| 5150-0167 | Weldon clearance light model 9186-8580 LED (PR). Low intensity only wired as steady on with marker light circuit. Location: (1) each side in body wheel well offset forward. | $289 |
| 5150-0168 | Whelen M6 series LED vertical mount tail lights. Includes LED stop/tail arrow turn and back-up lights individually mounted with black bezels and weatherproof connectors. | $1,562 |
| 5150-0169 | License plate light LED with black housing located at the rear of the body. | $140 |
| 5150-0170 | Optronics 4" GloLight LED taillights. Includes red LED stop/tail amber turn and clear back-up. | $546 |
| 5200-0000 | Breaker box 8 place single phase. Includes main breaker. Note: Main breaker occupies 2 places leaving 6 available. Locate [#LOC]. | $879 |
| 5200-0001 | Breaker box 12 place single phase. Includes main breaker. Note: If gen is 6KW or less main will occupy 2 places leaving 10 available. Locate [#LOC]. | $919 |
| 5200-0002 | Breaker Box 20 Place Single Phase. Includes main breaker. Locate [#LOC]. | $936 |
| 5200-0003 | Breaker box 2 place single phase (70A 110/220V). Location [#LOC]. | $392 |
| 5200-0008 | Breaker box 16 place single phase. Includes main breaker. Locate [#LOC]. | $923 |
| 5200-0009 | Breaker box 8 place single phase; no main breaker. For use with multiple options wired through shoreline power with 30A or larger inlet recept. Locate adjacent to main breaker box. | $685 |
| 5250-0003 | Generator Onan 6KW diesel. Requires fuel pick up option in chassis and 3rd party testing. Generator location: [#LOC]. | $15,744 |
| 5250-0004 | Generator Onan 10KW diesel. Requires fuel pick up option in chassis and 3rd party testing. Generator location: [#LOC]. | $20,100 |
| 5250-0005 | Generator Onan 6KW hydraulic. Includes generator control / PTO engage switch and a gauge panel located adjacent to breaker box. Generator location: [#LOC]. | $13,466 |
| 5250-0006 | Generator Onan 8KW hydraulic. Includes generator control/PTO engage switch and a gauge panel located adjacent to circuit breaker box. Generator location: [#LOC]. | $15,156 |
| 5250-0007 | Generator Onan 10KW hydraulic. Includes generator control / PTO engage switch and a gauge panel located adjacent to breaker box. Generator location: [#LOC]. | $15,737 |
| 5250-0008 | Generator Harrison 15KW MPC hydraulic. Includes generator control / PTO engage switch and a gauge panel located adjacent to breaker box. Generator location: [#LOC]. | $26,089 |
| 5250-0009 | Generator Harrison 20KW MPC hydraulic. Includes generator control / PTO engage switch and a gauge panel located adjacent to breaker box. Generator location: [#LOC]. | $28,187 |
| 5250-0012 | Generator Onan 15KW hydraulic. Includes generator control/PTO engage switch and a gauge panel located adjacent to circuit breaker box. Note: Generator is not compatible with an Amkus electric hyd tool power unit. Generator location: [#LOC]. | $22,729 |
| 5250-0017 | Generator Honda EM5000SXK with 4.5KW continuous output. Generator location: [#LOC]. | $6,374 |
| 5250-0026 | Generator Smart Power 10KW hydraulic model ER110. Includes generator control / PTO engage switch and a gauge panel located adjacent to breaker box. Generator location: [#LOC]. | $17,952 |
| 5250-0036 | Generator Smart Power 6KW hydraulic model HR-6 (with top mount cooler). Includes generator control / PTO engage switch and a gauge panel located adjacent to breaker box. Generator location: [#LOC]. | $14,297 |
| 5250-0037 | Generator Smart Power 8KW hydraulic model HR-8 (with top mount cooler). Includes generator control/PTO engagement switch and a gauge panel located adjacent to the circuit breaker box. Generator location: [#LOC]. | $16,338 |
| 5250-0038 | Generator Smart Power 10KW hydraulic model HR-110 (with top mount cooler). Includes generator control / PTO engage switch and a gauge panel located adjacent to breaker box. Generator location: [#LOC]. | $17,952 |
| 5250-0039 | Generator Harrison 10KW MCR hydraulic. Includes generator control / PTO engage switch and a gauge panel located adjacent to breaker box. Generator location: [#LOC]. | $16,986 |
| 5250-0040 | Generator Harrison 6KW MCR hydraulic. Includes generator control / PTO engage switch and a gauge panel located adjacent to breaker box. Generator location: [#LOC]. | $13,231 |
| 5250-0042 | Generator Westerbeke 5KW diesel (model#5.0 BCDB). Requires fuel pick up option in chassis and 3rd party testing. Generator location: [#LOC]. | $16,280 |

| Item No. | Description | |
|---|---|---|
| 5250-0043 | Dealer installed generator. Option includes space only. Dealer responsible for NFPA required 3rd party generator testing. | $311 |
| 5250-0047 | Generator Smart Power 15KW hydraulic model HR-15 (with top mount cooler). Includes generator control / PTO engage switch and a gauge panel located adjacent to breaker box. Generator location: [#LOC]. | $23,880 |
| 5250-0050 | Generator Smart Power 20KW hydraulic model HR-20 (with top mount cooler). Includes generator control / PTO engage switch and a gauge panel located adjacent to breaker box. Generator location: [#LOC]. | $26,255 |
| 5250-0051 | Locate generator gauge panel on pump operators panel ipo next to breaker box. | $126 |
| 5250-0053 | Generator Harrison 8KW hydraulic plumbed through aerial system. Bronto HDT only. When gen is engaged the Bronto will run off (1) hyd pump reducing it's speed by 50%. Includes generator control switch and gauge panel located adjacent to breaker box. Generator location: Driver side of dunnage pan over pump. | $18,036 |
| 5250-0055 | Generator Smart Power 8KW hydraulic model ER8. Includes generator control / PTO engage switch and a gauge panel located adjacent to breaker box. Generator location: [#LOC] | $19,346 |
| 5250-0060 | Dealer installed Onan 6KW diesel generator located [#LOC]. Option includes space only. Dealer responsible for NFPA required 3rd party generator testing. | $311 |
| 5250-0061 | Dealer installed Onan 6KW hydraulic generator located [#LOC]. Option includes space only. Dealer responsible for NFPA required 3rd party generator testing. | $311 |
| 5250-0062 | Dealer installed Onan 8KW hydraulic generator located [#LOC]. Option includes space only. Dealer responsible for NFPA required 3rd party generator testing. | $311 |
| 5250-0063 | Dealer installed Onan 10KW hydraulic generator located [#LOC]. Option includes space only. Dealer responsible for NFPA required 3rd party generator testing. | $311 |
| 5250-0064 | Dealer installed Onan 15KW hydraulic generator located [#LOC]. Option includes space only. Dealer responsible for NFPA required 3rd party generator testing. | $311 |
| 5250-0065 | Dealer installed Onan 20KW hydraulic generator located [#LOC]. Option includes space only. Dealer responsible for NFPA required 3rd party generator testing. | $311 |
| 5250-0066 | Dealer installed Smart Power 10KW hydraulic model ER110 generator located [#LOC]. Option includes space only. Dealer responsible for NFPA required 3rd party generator testing. | $311 |
| 5250-0067 | Dealer installed Smart Power 10KW hydraulic model HR110 generator located [#LOC]. Option includes space only. Dealer responsible for NFPA required 3rd party generator testing. | $311 |
| 5250-0068 | Dealer installed Smart Power 6KW hydraulic model HR-6 (with top mount cooler) generator located [#LOC]. Option includes space only. Dealer responsible for NFPA required 3rd party generator testing. | $311 |
| 5250-0069 | Dealer installed Smart Power 8KW hydraulic model HR-8 (with top mount cooler) generator located [#LOC]. Option includes space only. Dealer responsible for NFPA required 3rd party generator testing. | $311 |
| 5250-0070 | Dealer installed Smart Power 15KW hydraulic model HR-15 (with top mount cooler) generator located [#LOC]. Option includes space only. Dealer responsible for NFPA required 3rd party generator testing. | $311 |
| 5250-0071 | Dealer installed Smart Power 20KW hydraulic model HR-20 (with top mount cooler) generator located [#LOC]. Option includes space only. Dealer responsible for NFPA required 3rd party generator testing. | $311 |
| 5250-0072 | Dealer installed Harrison 6KW MCR hydraulic generator located [#LOC]. Option includes space only. Dealer responsible for NFPA required 3rd party generator testing. | $311 |
| 5250-0073 | Dealer installed Harrison 10KW MCR hydraulic generator located [#LOC]. Option includes space only. Dealer responsible for NFPA required 3rd party generator testing. | $311 |
| 5250-0074 | Dealer installed Harrison 30KW MPC hydraulic generator located [#LOC]. Option includes space only. Dealer responsible for NFPA required 3rd party generator testing. | $311 |
| 5250-0075 | Guarded generator PTO engage toggle switch. Located driver side cab switch panel. For use on Typhoon X and CIIX cabs only. | $204 |
| 5250-0076 | Guarded PTO engage rocker switch. Located driver side cab switch panel. For use on Quest CIIX LTH aerial and commercial cabs. | $204 |
| 5250-0077 | Generator Harrison 8KW MCR hydraulic. Includes generator control / PTO engage switch and a gauge panel located adjacent to breaker box. Generator location: [#LOC]. | $16,801 |
| 5250-0078 | Generator Smart Power 10KW hydraulic Liberator model Li15 (with top mount cooler and XRT hyd tool pump). Includes generator control / PTO engage switch and a gauge panel located adjacent to breaker box. Generator location: [#LOC]. | $27,746 |
| 5250-0080 | Dealer installed 5KW gas generator located [#LOC]. Option includes space only. Dealer responsible for NFPA required 3rd party generator testing. | $311 |

| Item No. | Description | |
|---|---|---|
| 5250-0092 | Generator Honda EM5000SXK with 4.5KW continuous output. NFPA rated at 3.3KW. Generator location: [#LOC]. | $5,775 |
| 5250-0094 | Harrison gas powered 5.5KW generator. Includes alternator duct and attached fuel tank. Locate in compartment [#LOC]. | $4,382 |
| 5250-0106 | Westerbeke 10KW BTDAR diesel single phase generator and XRT Hydraulic tool system with 3 tool capability. 10500 PSI system. Includes selector valve for each reel hyd res / filter and remote cooler. Requires fuel pick up option in chassis and 3rd party testing. Locate in dunnage pan offset to officer side. Route (4) lead lines to B1 compt. | $48,237 |
| 5250-0111 | Westerbeke 10KW BTDAR diesel single phase generator and XRT Hydraulic tool system with 2 tool capability. 10500 PSI system. Includes selector valve for each reel hyd res / filter. Requires fuel pick up option in chassis and 3rd party testing. Locate in [#LOC]. Route (4) lead lines to B1 compt. | $48,237 |
| 5250-0115 | Generator Harrison 15KW MPC hydraulic w/IHT. Includes tool circuit manifold aux heat exchanger generator control / PTO engage switch and a gauge panel located adjacent to breaker box. [#LOC] | $35,016 |
| 5250-0116 | Dealer installed Powertech 8KW diesel generator located [#LOC]. Option includes space only. Dealer responsible for NFPA required 3rd party generator testing. | $311 |
| 5250-0117 | Generator Harrison 8KW MAS hydraulic. Includes generator control/PTO engage switch and a gauge panel located adjacent to breaker box. Generator location: [#LOC]. | $16,801 |
| 5250-0118 | Generator Harrison 8KW LPG hydraulic. Includes generator control switch to engage the PTO and start the generator and a gauge panel located adjacent to breaker box. Generator location: [#LOC]. | $16,487 |
| 5250-0119 | Generator Harrison 8KW MCR hydraulic w/IHT. Includes tool system manifold aux heat exchanger generator control / PTO switch tool sytem / PTO switch (both switches accessible by driver) and a generator gauge panel located adjacent to breaker box. Generator location: [#LOC]. | $27,928 |
| 5250-0123 | Generator Honda EM4000 with 3.5KW continuous output. NFPA rated at 3.3KW. Generator location: [#LOC]. | $5,775 |
| 5250-0124 | Generator Smart Power 6KW hydraulic model LR-6 Light Rescue Series (FORD 250 350 450 550 Chassis). Includes generator control / PTO engage switch and a gauge panel located adjacent to breaker box. Generator location:[#LOC]. | $15,126 |
| 5250-0125 | Generator Harrison 10KW LPG hydraulic. Includes generator control/PTO engage switch and a gauge panel located adjacent to breaker box. Generator location: [#LOC]. | $16,986 |
| 5250-0128 | Generator Smart Power 15KW hydraulic Liberator model Li20 (with top mount cooler and XRT hyd tool pump). Includes generator control switch and a gauge panel located adjacent to breaker box. Generator location: [#LOC]. | $32,383 |
| 5250-0130 | Generator Harrison 6KW MDS hydraulic w/IHT for continuous accessory. Includes aux hyd system manifold integral aux heat exchanger generator control / PTO switch aux system / PTO switch (both switches accessible by driver) and a generator gauge panel located adjacent to breaker box. Generator location: [#LOC]. | $26,378 |
| 5250-0132 | Generator Harrison 8KW MDS hydraulic w/IHT for continuous accessory. Includes aux hyd system manifold integral aux heat exchanger generator control / PTO switch aux system / PTO switch (both switches accessible by driver) and a generator gauge panel located adjacent to breaker box. Generator location: [#LOC]. | $28,377 |
| 5250-0134 | Generator Harrison 6KW LPG hydraulic with remote mounted reservoir. Includes generator control / PTO engage switch and a gauge panel located adjacent to breaker box. Generator location: [#LOC]. | $17,356 |
| 5250-0135 | Generator Harrison 10KW MCR hydraulic w/IHT for continuous accessory. Includes aux hyd system manifold aux heat exchanger generator control / PTO switch aux system / PTO switch (both switches accessible by driver) and a generator gauge panel located adjacent to breaker box. Generator location: [#LOC]. | $26,686 |
| 5250-0137 | Generator Harrison 10KW LPG hydraulic with remote reservoir. Includes generator control/PTO engage switch and a gauge panel located adjacent to breaker box. Generator location: [#LOC]. | $16,986 |
| 5250-0138 | Generator Smart Power 20KW hydraulic Liberator model Li25 (with top mount cooler and XRT hyd tool pump). Includes generator control switch guarded PTO switch and a gauge panel located adjacent to breaker box. Generator location: [#LOC]. | $39,514 |
| 5250-0141 | Generator Smart Power 6KW hydraulic model ER6. Includes generator control / PTO engage switch and a gauge panel located adjacent to breaker box. Generator location: [#LOC]. | $14,297 |
| 5250-0142 | Generator Harrison 6KW LPG hydraulic. Includes generator control / PTO engage switch and a gauge panel located adjacent to breaker box. Generator location: [#LOC]. | $14,234 |

| Item No. | Description | |
|---|---|---|
| 5250-0143 | Generator Onan 8KW hydraulic 50 Hz. Includes generator control/PTO engage switch and a gauge panel located adjacent to circuit breaker box. Generator location: [#LOC]. | $15,737 |
| 5250-0144 | Generator Harrison 12KW MCR hydraulic. Includes generator control / PTO engage switch and a gauge panel located adjacent to breaker box. Generator location: [#LOC]. | $17,901 |
| 5250-0145 | Generator Harrison 6KW LPG hydraulic w/IHT. Includes tool system manifold aux heat exchanger generator control / PTO switch tool sytem / PTO switch (both switches accessible by driver) and a generator gauge panel located adjacent to breaker box. Generator location: [#LOC]. | $22,969 |
| 5250-0146 | Generator PTO engage programmed through multiplex display. For use on Typhoon X and CIIX cabs only. | $204 |
| 5250-0147 | Generator Smart Power 10KW hydraulic Liberator model Li10 (with top mount cooler and compatible with an XRT pump). Includes generator control / PTO engage switch and a gauge panel located adjacent to breaker box. Generator location: [#LOC]. | $25,346 |
| 5250-0149 | Harrison diesel APU/Generator model# 10K160. APU location: [#LOC]. Seperate fuel pick-up option is required with this option. | $25,857 |
| 5250-0151 | Generator Harrison 6KW MAS hydraulic. Includes generator control/PTO engage switch and a gauge panel located adjacent to breaker box. Generator location: [#LOC]. | $13,231 |
| 5250-0152 | Generator Harrison 10KW MAS hydraulic. Includes generator control/PTO engage switch and a gauge panel located adjacent to breaker box. Location: [#LOC] | $16,986 |
| 5255-0000 | 3rd party generator testing without pump. | $706 |
| 5255-0001 | 3rd party generator test with pump. | $94 |
| 5260-0000 | Generator air deflector for Onan hydraulic. When generator is compartment mounted or mounted in a pan on an aerial body engineering is to specify updraft or downdraft. | $460 |
| 5260-0001 | Remote start for diesel generator. Location: [#LOC]. | $434 |
| 5260-0002 | Remote control starting kit for Honda EM3800SX EM4000 EM5000SX and EM6500SX generators. Locate [#LOC]. | $749 |
| 5260-0004 | Generator prewire for dealer supplied and installed 5 KW portable generator. Includes 12 volt wiring and cable between breaker box. Prewire to [#LOC]. | $281 |
| 5260-0006 | Compartment door(s) of compartment mounted generator to have interlock. | $211 |
| 5260-0008 | Generator prewire for dealer supplied and installed 6.5KW portable generator. Includes 12volt wiring and cable between breaker box. Prewire to [#LOC]. | $345 |
| 5260-0014 | Oil drain valve with tube extending below officer side pump panel. | $220 |
| 5260-0017 | Compartment door(s) of compartment mounted compressor to have interlock. | $211 |
| 5260-0018 | Diamond plate generator shield (3) sided. Forward rearward and outboard sides w/2'' space between generator and shield. Outboard side to have slots for hot air exhaust. | $676 |
| 5260-0020 | Compartment door(s) of compartment mounted electric dump valve to have interlock. | $211 |
| 5260-0021 | Oil drain valve with tube extending below driver side pump panel. | $220 |
| 5260-0024 | Locate generator gauge panel on the pump operators panel in lieu of standard location adjacent to breaker box. | $126 |
| 5260-0025 | Generator prewire for dealer supplied and installed 3.5 KW portable generator (Honda or other with equivalent dimensions). Includes 12 volt wiring and A/C cabling to breaker box. Prewire to [#LOC]. | $281 |
| 5260-0033 | Diamond plate guard to protect the generator's wiring and harnesses in the dunnage pan. The guard will go full height of the dunnage pan forward to rear separating the generator and breaker box from the other side (driver's side) of the dunnage pan. | $349 |
| 5260-0034 | Vertical exhaust for Harrison MCR and MPC generators 6KW - 20KW. | $533 |
| 5260-0037 | Generated auxiliary 12V power system wired through diesel generator. System includes (3) Power Max 100A 12V converters to power VMUX electrical system. Generator not included (engine off but ignition must be in "on" posiion). Requires Engineering review for generator and 12V power requirements. | $6,669 |
| 5260-0041 | Idle reduction system powered by a diesel generator. System includes (2) Power Max 100A 12V converters to power the vehicle electrical system. Requires diesel generator. Requires Engineering review for generator and 12V power requirements. | $4,169 |
| 5260-0046 | Generator prewire for dealer supplied and installed 2KW portable generator. Includes 12 volt wiring and cable between breaker box. Prewire to [#LOC]. | $311 |
| 5260-0047 | Aesthetic shield for hydraulic generator on outboard end of dunnage pan. To be 3-sided open top and constructed from diamond plate. | $460 |
| 5260-0051 | Support bracing for generator between L1/R1 compartments. | $1,907 |
| 5260-0052 | Generator hydraulic pump to have drive through upgrade for second hydraulic pump. Includes upgrade to 80cc pump for increased torque capacity. Harrison and SmartPower 6-10kw only. Requires engineering review and approval. | $1,221 |

| Item No. | Description | |
|---|---|---|
| 5260-0054 | Generator prewire for dealer supplied and installed 3KW portable generator. Includes 12 volt wiring and cable between breaker box. Prewire to [#LOC]. | $311 |
| 5300-0000 | Light bar Code 3 model XL5100 (PR) 22" Long. All red lens. Location: [#LOC] | $1,280 |
| 5300-0003 | Light bar Code 3 model 556A3 56" long with all red lenses. Location: Centered on the front cab roof | $1,761 |
| 5300-0004 | Light bar Code 3 model 718A1 (PR) 18" Long. Red Upper / Clear Lower lens. Location: [#LOC]. | $1,443 |
| 5300-0015 | Light bars Federal Signal ADX2201 LED (PR) with red lenses. Location: [#LOC]. | $3,188 |
| 5300-0017 | Light bar Federal Signal Jet Stream 48" LED with R/W/R lenses red diodes and single traffic clearing light. Location: Centered on the front cab roof | $2,615 |
| 5300-0020 | Light bar Federal Signal JetStream JLX54HH-00011 54" LED. Red Solaris reflectors with red domes each side and (2) center clear TCL lights. Location: Centered on the front cab roof. | $2,909 |
| 5300-0021 | Light bar Federal Signal JetSolaris 60" LED. Red Solaris reflectors with clear domes. NFPA compliant. Does not require 2 addl side facing bars. Location: Centered on the front cab roof. | $2,765 |
| 5300-0023 | Light bars Federal Signal 22I (PR). Location: [#LOC]. | $1,156 |
| 5300-0024 | Light bar Federal Signal Aerodynic 25RQL-Fast 52" with red/clear lens. Location: Centered on the front cab roof. | $1,603 |
| 5300-0026 | Light bar Federal Signal Aerodynic ADL5202 52" with red/clear/red lens. Location: Centered on the front cab roof. | $1,515 |
| 5300-0028 | Light bar Federal Signal Aerodynic ADX5271 52" with 10 red Solaris LED reflectors. Location: Centered on the front cab roof | $3,071 |
| 5300-0029 | Light bar Federal Signal AeroDynic ADX7201 72" with 8 red Solaris LED reflectors. Location: Centered on the front cab roof. | $3,217 |
| 5300-0030 | Light bar Federal Signal Aerodynic AH1LC 72" with red/clear lens. Location: Centered on the front cab roof. | $1,932 |
| 5300-0031 | Light bar Federal Signal Aerodynic AH2LC 72" with red/clear lens. Location: Centered on the front cab roof | $2,009 |
| 5300-0044 | Light bar Federal Signal Vector VC6001. Location: Centered on the front cab roof | $2,268 |
| 5300-0047 | Light bar Whelen model 9M380NQ66 w/MKEZ7 mounts. Location: Centered on the front cab roof. | $2,921 |
| 5300-0048 | Light bar Whelen Centurion model C300700N 72". Location: Centered on the front cab roof | $1,785 |
| 5300-0049 | Light bar Whelen Edge model 9M380NV 66" with MKEZ7 mounts. Location: Centered on the front cab roof | $3,343 |
| 5300-0050 | Light bar Whelen Edge model 9M387NQ 72" with MKEZ7 mounts without rear facing strobes. N/A on INTL Chassis. Location: Centered on the front cab roof | $3,074 |
| 5300-0051 | Light bar Whelen model 9M387NV 72" all strobe with MKEZ7 mounts. N/A with Vista roof with front facing windows. N/A on INTL Chassis. Location: Centered on the front cab roof | $3,074 |
| 5300-0052 | Light bar Whelen Edge model 9MINNFPA 28 1/4" with MK9 mounts. All strobe light bar. Location: [#LOC] | $3,113 |
| 5300-0053 | Light bar Whelen Freedom model FN66QLED 66" with MKEZ7 mounts. All LED light bar without rear facing LEDs. Location: Centered on the front cab roof. | $3,959 |
| 5300-0055 | Light bar Whelen Freedom model FN72QLED 72" LED with MKEZ7 mounts and clear lenses. Location: Centered on the front cab roof. | $4,060 |
| 5300-0056 | Light bar Whelen Freedom model FN72VLED 72" LED with MKEZ7 mounts. N/A INTL Chassis or Vista roofs with front facing windows. Location: Centered on the front cab roof. | $4,060 |
| 5300-0059 | Light bar Whelen model 9MINNFPA 28 1/4" strobe with MKEZ7 mounts (PR). Location: [#LOC] | $3,113 |
| 5300-0060 | Light bar Code 3 model 574NFPA1 74" with all red lenses. Location: Centered on the front cab roof. | $2,036 |
| 5300-0065 | Light bar Federal Signal ADX2202 LED (PR) with red lenses. Located side facing only. Not NFPA compliant forward facing. Location: [#LOC]. | $1,977 |
| 5300-0070 | Light bar Federal Signal JetStream JLX5401 LED 54". Red Solaris reflectors with red domes. Location: Centered on the front cab roof | $2,367 |
| 5300-0074 | Whelen Mini-Freedom LED light bars (PR) model FNMINI 24" with red/clear lenses and low profile MK9 mounts. Location: [#LOC]. | $4,592 |
| 5300-0076 | Whelen Mini-Freedom LED side facing light bars (PR) model FT8RRRRF 24" with low profile MK9 mounts. Location: [#LOC]. Lense colors: Clear. | $4,399 |
| 5300-0082 | Whelen Mini-Freedom LED side facing light bars (PR) model FT8RRRRF 24" with MKEZ7 mounts. Location: [#LOC]. Lens color: Clear. | $4,399 |
| 5300-0084 | Whelen Mini-Freedom LED light bars (PR) model FNMINI 24" with red/clear lenses and MKEZ7 mounts. Location: [#LOC]. | $4,592 |

| Item No. | Description | |
|---|---|---|
| 5300-0086 | Light bar Code 3 MX model 758A1. Upper deck contains (4) rotators (2 ea side) with red lenses and (2) clear oscilasers. Lower deck contains (2) frt red halogen flashers outboard intersection sweeps and clear lenses. Loc: Centered on the frt cab roof. | $1,964 |
| 5300-0087 | Light bar Code 3 model XL5100 22" Long. All red lens. Location: Centered on the front cab roof. | $642 |
| 5300-0088 | Light bar Whelen Freedom model FN55VLED 55" LED with MKEZ7 mounts. N/A with Vista roofs with front facing windows. Location: Centered on the front cab roof. | $3,587 |
| 5300-0089 | Light bar Code 3 MX model 769A1. Upper deck contains 9 rotators w/ red lenses. Lower deck contains intersection sweeps w/clear lenses. Location: Centered on the front cab roof. | $2,034 |
| 5300-0091 | Light bar Code 3 Excalibur model X58A. Upper deck contains (4) rotators (two ea side) with red lenses and (2) white oscilasers with clear lenses. Lower deck contains (4) takedown lights and two alley lights. Location: Centered on the front cab roof. | $2,231 |
| 5300-0092 | Light bar Whelen Freedom model FN55QLED 55" LED with takedown lights MKEZ7 mounts and clear lenses. Location: Centered on the front cab roof. | $3,886 |
| 5300-0093 | Light bar Whelen Freedom model FN72VLED 72" LED with Opticom and MKEZ7 mounts. N/A INTL Chassis or Vista roofs with front facing windows. Location: Centered on the front cab roof. | $6,795 |
| 5300-0094 | Light bar Federal Signal 22I (ADL2201Y) with 175 FPM rotators (PR). Location: [#LOC] | $1,156 |
| 5300-0095 | Light bar Code 3 MX model 769 with R/C/C/C/B lenses. Upper deck contains 9 rotators. Lower deck contains intersection sweeps w/clear lenses. Location: Centered on the front cab roof. | $2,034 |
| 5300-0096 | Light bar Code 3 Javelin LED model JX67A. Location: Centered on the front cab roof. | $6,828 |
| 5300-0099 | Light bar Federal Signal JLX21 LED (PR). Located side facing only. Location: [#LOC]. | $1,938 |
| 5300-0100 | Light bar Whelen Freedom model FN72QLED 72" LED with clear lenses and MKEZ7 mounts. Includes (8) red LED and (2) white LED. N/A INTL Chassis. Location: Centered on the front cab roof. | $4,512 |
| 5300-0101 | Light bar Federal Signal Aerodynic ADL5202 52" with blue lenses. Location: Centered on the front cab roof. | $1,515 |
| 5300-0102 | Whelen Mini-Freedom LED side facing light bars (PR) model FT8RCRCF 24" with MKEZ7 mounts. Location: [#LOC]. Lense colors: Clear. | $4,365 |
| 5300-0103 | Light bar Whelen Freedom model FN66QLED 66" LED with 795H Opticom takedown lights and MKEZ7 mounts. Location: Centered on the front cab roof. | $5,603 |
| 5300-0105 | Light bar Code 3 model 718A1 (PR) 18" Long. Red upper/clear lower lens driver side and blue upper/clear lower officer side. Location: [#LOC] | $1,248 |
| 5300-0106 | Light bar Code 3 MX model 769 with B/B/C/R/R upper lenses clear lower lenses. Upper deck contains (8) rotators; (4) each side and alley lights. Lower deck contains intersection sweeps (4) LED warning; (2) blue driver and (2) red officer. Includes pre-wire for opticom in the center of the upper deck. Location: Centered on the front cab roof. Requires 5300-0105. | $3,650 |
| 5300-0110 | Light bar Whelen Freedom model FN72QLED 72" LED with MK8H high mounts. Includes (12) red LED and (2) white LED. N/A INTL Chassis. Location: Centered on the front cab roof. | $5,700 |
| 5300-0111 | Whelen Mini-Freedom LED side facing light bars (PR) model FT8RRRRF 24" with MK8H high mounts. Location: [#LOC]. Lens colors: Clear. | $4,604 |
| 5300-0113 | Light bar Whelen Freedom model FL2RRRRF 72" LED with MKEZ7 mounts. Includes (10) red LEDs and (4) blue LEDs. N/A INTL Chassis. Location: Centered on the front cab roof. | $5,416 |
| 5300-0117 | Light bar Code 3 model 729A (PR) 29" long. Red upper / clear lower lens. Location: [#LOC] | $3,657 |
| 5300-0118 | Light bar Code 3 MX model 769A with R/W/W/W/R upper lenses and clear lower lenses. Upper deck contains (6) rotators and 3-M Opticom. Lower deck contains intersection sweeps (6) red LED warning and (4) white LED warning. Location: Centered on the front cab roof. | $7,572 |
| 5300-0126 | Light bar Whelen Freedom model FN72VLED 72" LED with 795H Opticom (12) red LEDs (2) clear LEDs and MKEZ7 mounts. N/A INTL Chassis or Vista roofs with front facing windows. Location: Centered on the front cab roof. | $8,314 |
| 5300-0128 | Federal ADX7250 LED Light bar 72". Includes (12) Solaris 6-LED red reflectors (4) Solaris 9-LED red reflectors and (12) Solaris 6-LED white reflectors. Includes (2) flashers (1) for red LEDs and (1) for white LEDs. | $5,032 |
| 5300-0129 | Light bar Federal Signal ADX2205 LED (PR). Location: [#LOC] | $5,489 |
| 5300-0130 | Light bar Whelen Freedom model FN82VLED 82" LED with 3M Opticom and MKEZ7 mounts. N/A INTL Chassis or Vista roofs with front facing windows. Location: Centered on the front cab roof | $6,489 |
| 5300-0131 | Light bar Whelen model FFX2068 19" LED. Location: Centered front of cab below windshield | $1,741 |
| 5300-0136 | Light bar Federal Signal 22I (PR) red/blue lenses. Location: [#LOC] | $1,156 |
| 5300-0137 | Light bar Whelen Freedom model FN72VLED 72" LED with Opticom and MKEZ7 mounts. Includes (10) red LED and (2) white LED. N/A INTL Chassis. Location: Centered on the front cab roof. | $7,701 |
| 5300-0138 | Light bar package Federal Signal Escape LED (5) bar package. Includes: (1) 40'' LED front bar w/ Opticom (2) diagonal 26'' LED bars and (2) 28'' side LED bars. | $12,073 |

| Item No. | Description | |
|---|---|---|
| 5300-0140 | Light bar Whelen Freedom model FN72QLED 72" LED with MK8 high mounts and clear lenses. Includes (10) red LED and (4) white LED. N/A INTL Chassis. Location: Centered on the front cab roof. | $5,706 |
| 5300-0141 | Light bar Code 3 model 574A1 74" with all red lenses. Location: Centered on the front cab roof. | $2,298 |
| 5300-0142 | Light bar Federal Signal JetStream 60" LED. Red/White Solaris reflectors with clear domes. NFPA Compliant does not require 2 addl side facing bars. Location: Centered on the front cab roof. | $2,928 |
| 5300-0144 | Light bar Whelen Edge model 9M387NQ 72" with MKEZ7 mounts pre-wire for Opticom and without rear facing strobes. N/A on INTL Chassis. Location: Centered on the front cab roof | $3,359 |
| 5300-0145 | Federal ADX7204 LED Lightbar 72". Includes (12) Solaris 9-LED red reflectors and Opticom. Location: Centered on the front cab roof. | $6,097 |
| 5300-0146 | Light bar Whelen Freedom model FN72QLED 72" LED with MKEZ7 mounts. Includes (6) red LED (2) blue LED and (2) white LED. N/A INTL Chassis. Location: Centered on the front cab roof. Lens color: Clear. | $4,512 |
| 5300-0148 | Light bar Whelen model 9MMEDFFD 28 1/4" strobe with MK9 mounts (PR). Lense colors to be RRCR (front to rear). Location: [#LOC] | $2,852 |
| 5300-0151 | Light bar Whelen Freedom model FN66VLED 66" with MKEZ7 mounts. All LED light bar. Location: Centered on the front cab roof | $3,959 |
| 5300-0152 | Light bar Whelen Freedom model FN72QLED 72" LED with Opticom and MKEZ7 mounts. Includes (6) red LED (4) Blue LED and (2) white LED. N/A INTL Chassis. Location: Centered on the front cab roof. | $7,670 |
| 5300-0154 | Light bar Federal Signal JetStream 60'' LED. Red Solaris reflectors and red domes with clear center and 3M 792 Opticom. NFPA Compliant does not require 2 addl side facing bars. Location: Centered on the front cab roof | $7,079 |
| 5300-0155 | Federal ADX5283 LED Lightbar 52" with clear domes. Includes (16) Solaris 6-LED red reflectors (4) Solaris 6-LED white reflectors TCL and Opticom. Includes (2) flashers (1) for red LEDs and (1) for white LEDs. | $6,553 |
| 5300-0157 | Whelen Mini-Freedom LED light bars (PR) model FNMINI 24" with clear lenses and MKEZ7 mounts. Location: [#LOC]. | $4,592 |
| 5300-0158 | Light bar Whelen Freedom model FN72QLED 72" LED with 3M Opticom clear lenses and MKEZ7 mounts. N/A INTL Chassis. Location: Centered on the front cab roof. | $6,565 |
| 5300-0159 | Light bar Federal Signal ADX7202 72" with (6) red (2) white Solaris LED reflectors and 3M Opticom. Location: Centered on the front cab roof | $5,547 |
| 5300-0160 | Light bar Federal Signal JetSolaris 60" LED. Red Solaris reflectors with center traffic clearing light. NFPA compliant does not require 2 addl side facing bars. Location: Centered on the front cab roof. | $2,849 |
| 5300-0161 | Light bar Whelen Freedom model FN72VLED 72" LED with Opticom and MKEZ7 mounts. Includes (10) red LED (2) white LED and (2) green LED. N/A INTL Chassis. Location: Centered on the front cab roof. | $8,540 |
| 5300-0162 | Whelen Mini-Freedom LED side facing light bars (PR) model FT8RARRF driver and FT8RRARF officer 24" with MKEZ7 mounts. Location: [#LOC]. Lense colors: Clear. | $4,399 |
| 5300-0163 | Light bar Whelen Freedom model FN72VLED 72" LED with offset Opticom and MKEZ7 mounts. N/A INTL Chassis or Vista roofs with front facing windows. Location: Centered on the front cab roof. | $6,795 |
| 5300-0164 | Light bar package Federal Signal Escape LED (5) bar package. Includes: (1) 40'' LED front bar (RRWRR) (2) diagonal 26'' LED bars (RWR) and (2) 28'' side LED bars (RRR). | $9,300 |
| 5300-0165 | Whelen Mini-Freedom LED side facing front cab light bars (PR) model FT8RRRRF 24" with MKEZ7 mounts. All red LEDs with clear lenses. For use on rear mount platforms with supplemental upper level Zone A warning lights. Locate one each side front cab corners side facing. | $4,399 |
| 5300-0166 | Light bar Whelen Freedom model FN60VLED 60" LED with MKEZ7 mounts. N/A on Vista roofs with front facing windows. Location: Centered on the front cab roof | $5,096 |
| 5300-0167 | Whelen Mini-Freedom LED side facing light bars (PR) model FT8RRRRF 28.25" with MKEZ7 mounts. Location: [#LOC]. Lense colors: Clear. | $5,554 |
| 5300-0168 | Whelen Mini-Freedom LED side facing light bars (PR) model FT8RRRRF 24" with MKEZ7 mounts. Location: [#LOC]. Lens colors: Red. | $4,399 |
| 5300-0169 | Light bar Whelen Freedom model FN72QLED 72" LED with red lenses and MKEZ7 mounts. Includes (8) red LED and (2) white LED. N/A INTL Chassis. Location: Centered on the front cab roof. | $4,512 |
| 5300-0171 | Light bar Federal Signal Aerodynic ADL5202 52" with driver red and officer blue lenses. Location: Centered on the front cab roof. | $1,515 |
| 5300-0172 | Whelen Mini-Freedom LED side facing front cab light bars (PR) model FT8RRRRF 24" with MKEZ7 mounts. All red LEDs with red lenses. For use on rear mount platforms with supplemental upper level Zone A warning lights. Locate one each side front cab corners side facing. | $4,399 |

| Item No. | Description | |
|---|---|---|
| 5300-0173 | Light bar Whelen Freedom model FN72VLED 72" LED with MK8 high mounts. Includes (12) red LED (2) amber LED and (4) white LED. N/A INTL Chassis or Vista roofs with front facing windows. Location: Centered on the front cab roof. | $6,582 |
| 5300-0174 | Light bar Whelen Freedom model FN82VLED 82" LED with MKEZ7 mounts and red lenses. Includes (1) driver forward facing steady burn to meet California law. N/A INTL Chassis or Vista roofs with front facing windows. Location: Centered on the front cab roof | $4,794 |
| 5300-0175 | Light bar Whelen Freedom model FN72QLED 72" LED with PE215 pre-emptor and MKEZ7 mounts. Includes (12) red LED and (2) white LED. N/A INTL Chassis. Location: Centered on the front cab roof. | $6,281 |
| 5300-0176 | Light bar Whelen Freedom model FN72QLED 72" LED with MK8 high mounts. N/A INTL Chassis. Location: Centered on the front cab roof. | $4,060 |
| 5300-0179 | Light bar Federal Signal JLX21 LED red/blue(PR). Locate blue forward if side facing. Location: [#LOC] | $2,505 |
| 5300-0180 | Light bar Federal Signal Escape LED model ESC 2202-NFPA (PR). Red / white with clear lenses. Location: [#LOC]. | $3,572 |
| 5300-0181 | Light bar Federal Signal Escape LED model ESC 2202-NFPA (EA). Red / white with clear lenses. Location: Center front of cab. Requires additional forward facing lightbars. | $1,788 |
| 5300-0182 | Light bar (PR) Federal Signal Escape LED model ESC 2201P-NFPA (driver side) and ESC 2201D-NFPA (officer side). Red / white with clear lenses. Side facing only - not for use at front cab corners. Location: [#LOC]. | $3,388 |
| 5300-0184 | Whelen Mini-Freedom LED side facing light bars (PR) model FT8RCCRF 28.25" with R/C/C/R lenses and MKEZ7 mounts. Location: [#LOC] | $4,365 |
| 5300-0185 | Light bar Whelen Freedom model FN72QLED 72" LED with clear lenses MKEZ7 mounts and pre-wire for 3M opticom. Includes (8) red LED and (2) white LED. N/A INTL Chassis. Location: Centered on the front cab roof | $4,594 |
| 5300-0186 | Light bar Whelen Freedom model FN72QLED 72" LED with pre-wire for 3M Opticom and MKEZ7 mounts. N/A INTL Chassis. Location: Centered on the front cab roof | $4,328 |
| 5300-0187 | Light bar Whelen Freedom model FN72QLED 72" LED with clear lenses and MKH8 high mounts. Includes (8) red LED and (2) white LED. N/A INTL Chassis. Location: Centered on the front cab roof | $4,557 |
| 5300-0188 | Light bar Whelen Freedom model FN72VLED 72" LED with Opticom and MK8 high mounts. N/A INTL Chassis or Vista roofs with front facing windows. Location: Centered on the front cab roof. | $6,842 |
| 5300-0189 | Light bar Federal Signal ADX2201 LED with red lenses. Location: Centered on the front cab roof. Requires additional corner lightbars for NFPA compliance. | $1,596 |
| 5300-0190 | Light bar Whelen Freedom model FN72QLED 72" LED with Opticom and MK8 high mounts. Includes (6) red LED (4) Blue LED and (2) white LED. N/A INTL Chassis. Location: Centered on the front cab roof. | $7,716 |
| 5300-0192 | Light bar Code 3 Model XP9588NFPA1 88" LED. All red with clear lenses. Not available on commercial cabs. Location: Centered on the front cab roof. | $5,028 |
| 5300-0193 | Code3 model XP9501NFPA1 (PR) red LED with clear domes. Location: [#LOC]. | $2,136 |
| 5300-0195 | Light bar Federal Signal JetStream 60" LED. Red driver/Blue officer Solaris reflectors. Location: Centered on the front cab roof | $2,425 |
| 5300-0196 | Whelen Mini-Freedom LED light bars (PR) model FNMINI 24" with red lenses and MK8 high mounts. Location: [#LOC]. | $4,707 |
| 5300-0197 | Light bar Whelen Freedom model FN72QLED 72" LED with GTT Opticom red lenses and MKH8 high mounts. N/A INTL Chassis. Location: Centered on the front cab roof. | $6,617 |
| 5300-0198 | Light bar Federal Signal ADX2215-SMV LED side facing (PR) with driver blue forward/red rearward and officer red forward/blue rearward facing lenses. Location: [#LOC]. | $4,499 |
| 5300-0199 | Light bar Whelen Freedom model FL2RRRR 72" LED with Opticom and MKEZ7 mounts. Includes (12) red LED. N/A INTL Chassis. Location: Centered on the front cab roof. | $7,673 |
| 5300-0202 | Light bar Weldon Aero Maxx II 59" LED. NFPA Compliant does not require 2 addl side facing bars. Location: Centered on the front cab roof | $3,151 |
| 5300-0203 | Light bar Whelen Freedom model FN72QLED 72" LED with 3M 795H Opticom (10) red LEDs (2) clear LEDs and MK8 high mounts. For use with front vista windows. Location: Centered on the front cab roof. | $7,674 |
| 5300-0204 | Federal ADX7262 LED Lightbar 72" with clear lenses. Includes (12) Solaris 6-LED red reflectors (8) Solaris 6-LED blue reflectors (4) Solaris 9-LED red reflectors and a 3M Opticom. Includes (2) flashers (1) for red LEDs and (1) for blue LEDs. | $6,132 |
| 5300-0205 | Whelen Mini-Freedom LED side facing light bars (PR) model FT8CRRCF 28.25" with CRRC lenses and MKEZ7 mounts. Location: [#LOC]. | $4,365 |

| Item No. | Description | |
|---|---|---|
| 5300-0207 | Federal ADX7250 LED Lightbar 72". Includes (12) Solaris 6-LED red reflectors (4) Solaris 9-LED red reflectors and (10) Solaris 6-LED white reflectors and Opticom. Includes (2) flashers (1) for red LEDs and (1) for white LEDs. | $7,620 |
| 5300-0209 | Federal ADX7265 LED Lightbar 72". Includes (10) Solaris 6-LED red reflectors (10) Solaris 6-LED blue reflectors (4) Solaris 9-LED red reflectors and a 3M Opticom. Includes (2) flashers (1) for red LEDs and (1) for blue LEDs. | $6,132 |
| 5300-0210 | Whelen Mini-Freedom LED light bars (PR) model FNMINI 24" with red/clear lenses and MK8 high mounts. Location: [#LOC]. | $4,707 |
| 5300-0211 | Light bar Whelen Freedom model FN60QLED 60" LED with MKEZ7 mounts. Includes (8) red (2) white and (2) amber modules. Location: Centered on the front cab roof | $5,193 |
| 5300-0212 | Light bar Whelen Freedom model FN72VLED 72" LED with MKEZ7 mounts. Includes (10) red LED and (4) white LED. N/A INTL Chassis. Location: Centered on the front cab roof. | $5,280 |
| 5300-0213 | Light bar Code 3 MX model 769NFPA1 with Opticom. Upper deck contains 5 rotators w/ red lenses. Lower deck contains 795H Opticom and intersection sweeps w/clear lenses. Location: Centered on the front cab roof. | $3,412 |
| 5300-0214 | Light bar Whelen Freedom model FN72QLED 72" LED with GTT Opticom clear lenses and MKH8 high mounts. N/A INTL Chassis. Location: Centered on the front cab roof | $6,617 |
| 5300-0215 | Light bar Whelen Freedom model FL2RRRRF 72" LED with MK8H high mounts. Includes (10) red LEDs and (4) blue LEDs. N/A INTL Chassis. Location: Centered on the front cab roof. | $5,468 |
| 5300-0216 | Light bar Whelen Freedom 72" LED with (8) red LEDs (2) white LEDs side facing LR11 alley lights 3M Opticom clear lenses and MKEZ7 mounts. N/A INTL Chassis. Location: Centered on the front cab roof | $6,905 |
| 5300-0217 | Light bar Federal Signal AeroDynic ADX7205 72" with 12 red Solaris LED reflectors and 2 traffic clearing lts. Location: Centered on the front cab roof. | $3,718 |
| 5300-0219 | Light bar Whelen Freedom model FL2RRRR 72" LED with MKEZ7 mounts and clear lenses. Includes (12) red LEDs (2) clear LEDs and GTT Opticom. N/A INTL Chassis and vista cabs. Location: Centered on the front cab roof. | $6,756 |
| 5300-0220 | Light bar Whelen Freedom 82" LED with MKEZ7 mounts and clear lenses. Includes (14) red LEDs and (2) LR11Takedown lights . N/A commercial Chassis. Location: Centered on the front cab roof | $5,725 |
| 5300-0232 | Light bar Code 3 Excalibur model X69A. Upper deck contains (8) OPX-6 red LED modules and (1) LEDX modules in the center. Lower deck contains (10) OPX-6 red LED modules with a center mounted N-3 emitter. Lens color: Clear. Location: Centered on the front cab roof. | $5,998 |
| 5300-0233 | Light bar Code 3 Excalibur 36". Upper contains (6) OPX-6 red LED modules. Lower contains (6) OPX-6 red LED modules. Lens color clear. Location: [#LOC]. | $8,212 |
| 5300-0236 | Light bar Federal Signal JLX2133C-NFPA LED (PR). Red Solaris reflectors with clear lenses. Location: [#LOC]. | $2,304 |
| 5300-0244 | Whelen Mini-Freedom LED side facing light bars (PR) model FT8RRRRF driver and FT8BBBBF officer 28.25" with MKEZ7 mounts. Location: [#LOC]. Lense colors: Clear. | $4,399 |
| 5300-0245 | Whelen Mini-Freedom LED light bars (PR) model FT8RCRCF 28.25" with clear lenses and MKEZ7 mounts. Location: [#LOC]. | $4,592 |
| 5300-0246 | Whelen Mini-Freedom LED light bars (PR) model FT8RCRCF 28.25" with clear lenses and MKEZ7 mounts. Location: [#LOC]. | $4,592 |
| 5300-0247 | Light bar Federal Signal ADX2201 LED (PR) red with clear lenses. Location: [#LOC]. | $3,188 |
| 5300-0251 | Light bar Whelen Freedom model FN72QLED 72" LED with clear lenses Opticom and MKEZ7 mounts. Includes (7) red LED (3) blue LED and (2) white LED. N/A INTL Chassis. Location: Centered on the front cab roof. | $7,013 |
| 5300-0252 | Light bar Whelen Freedom model FN72QLED 72" LED red/blue with MKEZ7 mounts and clear lenses. N/A INTL Chassis. Location: Centered on the front cab roof | $4,060 |
| 5300-0253 | Whelen Mini-Freedom LED side facing light bars (PR) model FT8RRBBF driver and FT8BBRRF officer 28.25" with MKEZ7 mounts. Location: [#LOC]. Lense colors: Clear. | $4,399 |
| 5300-0255 | Light bar Federal Signal JLX2133-CNFPA LED (PR) with clear lenses. Location: [#LOC]. | $2,304 |
| 5300-0256 | Light bar Whelen Freedom model FN72QLED 72" LED with MKEZ7 mounts. Includes (4) red LED (4) blue LED and (2) white LED. N/A INTL Chassis. Location: Centered on the front cab roof | $4,512 |
| 5300-0257 | Light bar Whelen Freedom model FN72QLED 72" LED with MKEZ7 mounts. Includes (1) driver forward facing steady burn to meet California law. N/A INTL Chassis. Location: Centered on the front cab roof. | $4,060 |
| 5300-0260 | Light bar Whelen Freedom 66" LED with 3M Opticom red lenses and MKEZ7 mounts. Includes (10) red LED and (2) LR11 dual alley lights. Location: Centered on the front cab roof. | $6,408 |
| 5300-0261 | Light bar Federal Signal Legend. (2) 24" light bars LED side facing only. Lenses color: clear. Location: [#LOC]. | $3,701 |

| Item No. | Description | |
|---|---|---|
| 5300-0264 | Whelen Mini-Freedom LED side facing light bars (PR) model FT8RCRRF driver and FT8BCBBF officer 24" with MKEZ7 mounts. Location: each side over rear cab doors. Lense colors: Clear. | $4,365 |
| 5300-0265 | Whelen Mini-Freedom LED side facing light bars (PR) model FT8RCRRF driver and FT8BCBBF officer 24" with MKEZ7 mounts. Location: front cab corners. Lense colors: Clear. | $4,365 |
| 5300-0267 | Light bar Whelen Justice model JE2NFPA 56" LED with clear lenses and MKEZ7 mounts. N/A on Vista roofs with front facing windows. Includes (4) red corner facing LIN6 LED lights (6) forward facing CON3 Linear LED lights; (4) red (2) white. Location: Centered on the front cab roof. | $2,423 |
| 5300-0269 | Light bar Whelen Freedom model FN60VLED 60" LED with clear lenses and MKEZ7 mounts. Includes (6) red (2) white (4) blue modules and GTT Opticom. Location: Centered on the front cab roof. | $6,205 |
| 5300-0270 | Light bar Whelen model 45B38 38" LED with Opticom. Location: Centered front of cab below windshield | $2,966 |
| 5300-0271 | Light bar Whelen Freedom model FN72QLED 72" LED red/blue with MK8 high mounts. N/A INTL Chassis. Location: Centered on the front cab roof | $4,113 |
| 5300-0277 | Light bar Whelen Freedom model FN72VLED 72" LED with MK8 mounts. N/A INTL Chassis or Vista roofs with front facing windows. Location: Centered on the front cab roof. | $4,112 |
| 5300-0278 | Light bar Whelen 4500 LED red/clear (PR) side facing. Includes: (2) 28'' side LED bars. Location: [#LOC]. | $5,101 |
| 5300-0279 | Light bar Whelen 4500 LED red/clear (PR). Includes: (2) 24'' LED bars. Location: [#LOC]. | $4,873 |
| 5300-0280 | Whelen Mini-Freedom LED side facing light bars (PR) model FT8RCRRF driver and FT8RRCRF officer 24" with clear lenses no rear facing lights and MKEZ7 mounts. Location: [#LOC] | $4,592 |
| 5300-0283 | Light bar Whelen Freedom model FN72QLED 72" LED with MKEZ7 mounts. Includes (4) red LED (4) blue LED and (2) white LED. N/A INTL Chassis. Location: Centered on the front cab roof | $4,512 |
| 5300-0284 | Light bar Whelen Freedom model FN82VLED 82" LED with MKEZ7 mounts and clear lenses. Includes (12) red (4) white LEDs. N/A commercial Chassis. Location: Centered on the front cab roof | $6,067 |
| 5300-0285 | Whelen Mini-Freedom LED side facing light bars (PR) model FT8RRRRF 24" with MK8H high mounts. Location: [#LOC]. Lense colors: Red. | $4,604 |
| 5300-0286 | Light bar Whelen Freedom model FN72QLED 72" LED with MK8 high mounts. Includes (14) red LED with red lenses. N/A INTL Chassis. Location: Centered on the front cab roof. | $5,706 |
| 5300-0287 | Light bar Whelen Freedom model FN82VLED 82" LED with MKEZ7 mounts and clear lenses. Includes (14) red (4) white LEDs. N/A commercial Chassis. Location: Centered on the front cab roof | $6,418 |
| 5300-0288 | Light bar Federal Signal JetStream 60" LED. Red/Blue Solaris reflectors with clear domes. NFPA Compliant does not require 2 addl side facing bars. Location: Centered on the front cab roof | $2,928 |
| 5300-0289 | Light bar Whelen Freedom model FN72QLED 72" LED with MKEZ7 mounts. Includes (5) red LED (5) blue LED and (4) white LED. N/A INTL Chassis. Location: Centered on the front cab roof | $5,409 |
| 5300-0290 | Whelen Mini-Freedom LED light bars (PR) model FT8 28.25" with clear lenses and MKEZ7 mounts. Includes: (4) corner mounted red LED (2) split red/white forward facing LED flashing in X pattern and (1) end mounted red LED Location: [#LOC]. | $5,604 |
| 5300-0291 | Whelen Mini-Freedom LED light bars (PR) model FT8 28.25" with clear lenses and MK8H high mounts. Includes: (4)corner mounted red LED (2) split red/white forward facing LED flashing in X pattern and (1) end mounted red LED Location: [#LOC]. | $5,654 |
| 5300-0292 | Light bar Whelen Freedom model FN72QLED 72" LED with MK8 high mounts. Includes (8) red LED (2) split red/white flashing in X pattern and (4) white LED. N/A INTL Chassis. Location: Centered on the front cab roof. | $5,976 |
| 5300-0294 | Light bar Whelen Freedom model FN72QLED 72" LED with MK8H mounts. Centered on the front cab roof. | $4,005 |
| 5300-0295 | Light bar Whelen Freedom model FN72QLED 72" LED with 3M Opticom clear lenses and MKH8 mounts. N/A INTL Chassis. Location: Centered on the front cab roof. | $6,565 |
| 5300-0296 | Light bar Whelen Freedom model FN72QLED 72" LED with MKEZ7 mounts. Includes (12) red LED and (2) white LED. N/A INTL Chassis. Location: Centered on the front cab roof | $5,409 |
| 5300-0297 | Light bar Whelen Freedom model FN66QLED 66" with MKEZ7 mounts. All LED light bar without rear facing LEDs. Driver side red LED officer blue LED. Location: Centered on the front cab roof. | $3,959 |
| 5300-0298 | Light bar Whelen Freedom model FN72QLED 72" LED with MKEZ7 mounts. Location: Centered on the front cab roof. | $4,060 |
| 5300-0299 | Light bar Whelen 4500 Series 20" LED (model 45B20). Location: Centered front of cab below windshield. | $1,807 |

| Item No. | Description | |
|---|---|---|
| 5300-0300 | Light bar Whelen Freedom model FN72QLED 72" LED with 3M Opticom clear lenses and MKEZ7 mounts. N/A INTL Chassis. Location: Centered on the front cab roof. | $6,565 |
| 5300-0301 | Light bar Whelen Freedom model FN72QLED 72" LED with Opticom and MK8 high mounts. Includes (8) red LED and (4) white LED with red/clear lenses. N/A INTL Chassis. Location: Centered on the front cab roof. | $6,372 |
| 5300-0302 | Light bar Federal Signal Split Vision VSLR8-NFPA1. Two (2) 26.5" 4-pod light bars w/ (3) red and (1) multi-color pods on each bar with red/clear lenses. Location: [#LOC]. | $4,200 |
| 5300-0303 | Light bar Whelen Freedom model FN66QLED 66" with MKEZ7 mounts. Includes (10) red LED with red lenses and (2) white LED with clear lenses. Location: Centered on the front cab roof. | $4,724 |
| 5300-0304 | Light bar Whelen Freedom model FN72QLED 72" LED with MK8 high mounts. Includes (5) red LED (5) blue and (4) white LED . N/A INTL Chassis. Location: Centered on the front cab roof. | $5,706 |
| 5300-0305 | Light bar Whelen Freedom model FN55QLED 55" LED with driver red/officer blue LEDS takedown lights and MKEZ7 mounts. Location: Centered on the front cab roof. | $3,886 |
| 5300-0306 | Light bar Federal Signal JetSolaris 60" LED. Red and blue Solaris reflectors with center traffic clearing light. NFPA Compliant does not require 2 addl side facing bars. Location: Centered on the front body mounted to the roof with no upper body or mounted on a bracket in front of the body with 13" upper body. | $2,849 |
| 5300-0307 | Light bar Whelen Freedom model FN72QLED 72" LED with clear lenses Opticom and MKEZ7 mounts. Includes (10) red LED and (2) white LED. N/A INTL Chassis. Location: Centered on the front cab roof. | $7,013 |
| 5300-0309 | Whelen Mini-Freedom LED side facing light bars (PR) model FNMINI 24" with red/blue LED and MKEZ7 mounts. Location: [#LOC]. Lens colors: Clear. | $4,399 |
| 5300-0310 | Light bar Whelen Freedom model FN72VLED 72" LED with Opticom and MK8H high mounts. Includes (10) red LED (2) white LED and (2) blue LED. N/A INTL Chassis. Location: Centered on the front cab roof. | $6,948 |
| 5300-0313 | Light bar Federal Signal ADX2205 LED (PR) red/clear. State of Maryland only. Location: [#LOC]. | $5,489 |
| 5300-0314 | Light bar Federal Signal Legend. (2) 24" light bars LED. Lenses color: clear. (1) Model number LGD24Z-00019 and (1) model number LGD24Z-00020. Location: [#LOC]. | $2,162 |
| 5300-0315 | Whelen Mini-Freedom LED side facing light bars (PR) model FT8BRBRF driver and FT8RBRBF officer 28.25" with MKEZ7 mounts. Location: [#LOC]. Lense colors: Clear. | $4,399 |
| 5300-0317 | Light bar Whelen Freedom model FN55QLED 55" with GTT 795H Opticom and MKEZ7 mounts. All LED light bar without rear facing LEDs. Location:[#LOC]. | $5,127 |
| 5300-0318 | Light bar risers (PR) for the light bars installed on the top of the cab to insure 360 degree visibility. The riser shall raise the as mounted light bar(s) approximately 4" to prevent interference with the brow lighting (if so equipped) and ensure 360 degree visibility is maintained. | $201 |
| 5300-0319 | Light bar Whelen Freedom model FN60VLED 60" LED with MK8H mounts. N/A on Vista roofs with front facing windows. Location: Centered on the front cab roof | $5,162 |
| 5300-0320 | Light bar Whelen Freedom model FN72QLED 72Light bar Whelen Freedom model FN72QLED 72" LED with MKEZ7 mounts. Includes (10) red LED (4) blue. Location: Centered on the front cab roof. | $4,576 |
| 5300-0322 | Light bar made from (2) PowerArc model M90FK-RC light heads. Each light head houses (12) red LEDs (24 total) with clear lenses and a polished stainless steel flange. Includes oscillating technology. Both light heads when mounted together to make light bar are approximately 20" in length. Location: centered front of cab below windshield. | $1,729 |
| 5300-0325 | Light bar Whelen Freedom model FN72VLED 72" LED with 795H Opticom (12) red LEDs (2) clear LEDs and MK8H mounts. N/A INTL Chassis or Vista roofs with front facing windows. Location: Centered on the front cab roof. | $8,359 |
| 5300-0326 | Light bar Whelen Freedom model FN72QLED 72" LED with GTT Opticom clear lenses and MK8H mounts. Includes (3) red LED (3) blue LED and (2) white LED. N/A INTL Chassis. Location: Centered on the front cab roof. | $6,615 |
| 5300-0328 | Light bar Whelen Freedom model FN72QLED 72" LED with MK8 high mounts. Includes (8) red LED (2) blue LED and (4) white LED. N/A INTL Chassis. Location: Centered on the front cab roof. | $5,706 |
| 5300-0329 | Light bar Whelen Freedom model FN55QLED 55" LED with driver red/officer blue LEDS takedown lights and MKEZ7 mounts. Location: Centered on the front cab roof. | $3,886 |
| 5300-0330 | Light bar Whelen Freedom model FN72QLED 72" LED with clear lenses and MKE7 mounts. Includes (10) red LED and (4) white LED. N/A INTL Chassis. Location: Centered on the front cab roof. | $5,706 |
| 5300-0331 | Light bar Federal Signal JetSolaris 60" LED. Clear/white Solaris reflectors with red domes. NFPA compliant. Does not require 2 addl side facing bars. Location: Centered on the front cab roof. | $2,765 |

| Item No. | Description | |
|---|---|---|
| 5300-0332 | Light bar Whelen Freedom model FN72QLED 72" LED with MKEZ7 mounts. Includes (6) red (4) blue and (4) white Super LED modules. Lens color to be R/R/B/W/B/R/W/W/R/B/W/B/R/R Location: Centered on the front cab roof. | $5,317 |
| 5300-0333 | Whelen Mini-Freedom LED side facing light bars (PR) model FT8RBRP 24" with MKEZ7 mounts. Location: [#LOC]. Lens color: Red/Blue. | $4,399 |
| 5300-0334 | Light bar Whelen Freedom model FN72QLED 72" LED GTT Opticom and clear lenses MKEZ7 mounts. Includes (8) red LED and (2) white LED. N/A INTL Chassis. Location: Centered on the front cab roof | $5,796 |
| 5300-0335 | Federal ADX7204 LED lightbar 72". Includes (12) Solaris 9-LED red reflectors with clear lenses and Opticom. Location: Centered on the front cab roof. | $6,097 |
| 5300-0336 | Federal ADX7204 LED lightbar 72". Includes (12) Solaris 9-LED red reflectors with lens arrangement of R/C/R/C/R/C/C/C/C/R/C/R/C/R and Opticom (with switch accessible to driver). Location: Centered on the front cab roof. | $6,097 |
| 5300-0337 | Light bar Whelen Freedom model FN72QLED 72" LED with MK8H high mounts. Includes (8) red LED and (6) white LED. N/A INTL Chassis. Location: Centered on the front cab roof. | $5,353 |
| 5300-0339 | Light bar Federal Signal JetSolaris 72" LED. Red and White Solaris reflectors with clear domes. NFPA compliant. Does not require 2 addl side facing bars. Location: Centered on the front cab roof. | $2,629 |
| 5300-0340 | Light bar Whelen Freedom model FN72QLED 72" LED GTT Opticom with MKEZ7 mounts. Includes (4) red LED (4) blue LED and (2) white LED. N/A INTL Chassis. Location: Centered on the front cab roof | $5,796 |
| 5300-0343 | Light bar Whelen Freedom model FN72QLED 72" LED with clear lenses MKEZ7 mounts and pre-wire for 3M opticom. Includes (3) red LED (3) blue LED and (2) white LED. N/A INTL Chassis. Location: Centered on the front cab roof | $3,879 |
| 5300-0344 | Light bar Whelen Justice model JE0NFPA 62" LED with clear lenses and MKEZ7 mounts. N/A on Vista roofs with front facing windows. Includes (4) red corner facing LIN6 LED lights (6) forward facing CON3 Linear LED lights; (4) red (2) white. Location: Centered on the front cab roof. | $2,546 |
| 5300-0346 | Whelen Mini-Freedom LED light bars (PR) model FNMINI 24" with clear lenses and MKEZ7 mounts. Includes red/clear/blue driver and blue/clear/red officer. Location: [#LOC]. | $4,592 |
| 5300-0347 | Light bars Federal Signal One (1) center 3 pod Vision SLR model VSLR3S-NFPA1 LED light bar on 4" tall channel riser. One (1) Vision SLR model VSLR85-NFPA1 side light bars containing two (2) 4 pod LED light bars. Lenses to be R/R/W/R R/W/R R/W/R/R. Location: "V" centered on the front cab roof with the center pod mounted on 4" tall channel risers to accommodate an Opticom below (not included). | $6,232 |
| 5300-0349 | Light bar Whelen Freedom model FN72QLED 72" LED with clear lenses Opticom and MK8H high mounts. Includes (8) red LED (2) blue LED (2) white (2) LR11 takedown and 795H Opticom. N/A INTL Chassis. Location: Centered on the front cab roof. | $6,900 |
| 5300-0350 | Whelen Mini-Freedom LED side facing light bars (PR) model FT8RBRRF 28.25" with clear lenses and MK8H mounts. Location: [#LOC]. | $4,415 |
| 5300-0351 | Light bar Whelen Freedom model FN66QLED 66" LED with MK8 high mounts. Includes (13) red LED (7) blue and (2) white takedown LEDs. Location: centered on the front cab roof. | $6,939 |
| 5300-0352 | Whelen Mini-Freedom LED light bars (PR) red/blue 24" with clear lenses and MKEZ7 mounts. Location: [#LOC]. | $4,592 |
| 5300-0354 | Light bar Federal Signal Split Vision VSLR6. Two (2) 21" 3-pod light bars w/ (3) red pods on each bar with red lenses. Location: [#LOC]. | $3,552 |
| 5300-0355 | Light bar Federal Signal Split Vision VSLR6. Two (2) 21" 3-pod light bars w/ (2) red pods and (1) multi-color pod on each bar with red/clear lenses. Location: [#LOC]. | $3,552 |
| 5300-0357 | Light bar Federal Signal Vision VSLR60S-NFPA1. Includes (7) LED pods; (5) red (2) multi-color. Location: center cab roof. | $3,971 |
| 5300-0358 | Light bars Federal Signal Vision VSLR. One (1) center 21" 3 pod and two (2) side 26.5" 4 pod LED light bars. Lenses to be R/R/C/R R/C/R R/C/R/R. Location: "V" centered on the front cab roof. If equipped with front vista windows rear LED to be shut off. | $5,493 |
| 5300-0359 | Light bar Federal Signal Split Vision VSLR6. Two (2) 21" 3-pod light bars w/ (3) blue pods on each bar with blue lenses. Location: [#LOC]. | $3,552 |
| 5300-0360 | Light bar Federal Signal Split Vision VSLR6. Two (2) 21" 3-pod light bars w/ (2) red pods and (1) multi-color pod on each bar with R/C/R lenses. Pods 2 and 5 to have rear rotators programmed amber to rear white side and forward. Location: [#LOC]. | $3,886 |
| 5300-0361 | Light bar Federal Signal Split Vision VSLR6. Two (2) 21" 3-pod light bars w/ (2) blue pods and (1) multi-color pod on each bar with B/C/B lenses. Pods 2 and 5 to have rear rotators programmed amber to rear white side and forward. Location: [#LOC]. | $3,886 |

| Item No. | Description | |
|---|---|---|
| 5300-0362 | Light bars Power Arc model VM2502GLP-1P LED (PR). Colors to be RBR RBR. Includes Golight on each bar. Location: [#LOC]. | $5,218 |
| 5300-0363 | Whelen Mini-Freedom LED side facing light bars (PR) model FT8RCCRF 28.25" with R/C/C/R lenses and MK8H mounts. Location: [#LOC]. | $4,415 |
| 5300-0364 | Light bar Whelen Freedom model FN72QLED 72" LED with red lenses and MKEZ7 mounts. Includes (10) red LED. N/A INTL Chassis. Location: Centered on the front cab roof. | $4,512 |
| 5300-0365 | Light bars Federal Signal Vision VSLR. One (1) center 21" 3 pod and two (2) side 26.5" 4 pod LED light bars. Lenses to be R/C/R/R C/R/C R/R/C/R. Location: "V" centered on the front cab roof. If equipped with front vista windows rear LED to be shut off. | $5,493 |
| 5300-0366 | Light bars Federal Signal Vision VSLR. One (1) center 21" 3 pod and two (2) side 26.5" 4 pod LED light bars. Lenses to be R/R/C/R R/R/R R/C/R/R. Location: "V" centered on the front cab roof. If equipped with front vista windows rear LED to be shut off. | $5,493 |
| 5300-0367 | Light bar Whelen Freedom model FN66QLED 66" with MKEZ7 mounts. (10) red and (2) white LED light bar without rear facing LEDs. Location: Centered on the front body mounted to the roof with no upper body or mounted on a bracket in front of the body with 13" upper body. | $4,802 |
| 5300-0368 | Light bar Federal Signal JetSolaris 60" LED. Red and blue Solaris reflectors reflectors with center traffic clearing light. NFPA compliant does not require 2 addl side facing bars. Location: Centered on the front cab roof. | $2,849 |
| 5300-0369 | Light bar Whelen Freedom model FN72QLED 72" LED with MK8H high mounts and red/clear lenses. Includes (12) red LED and (2) white LED. N/A INTL Chassis. Location: Centered on the front cab roof. | $5,700 |
| 5300-0370 | Light bar Federal Signal Split Vision VSLR8S-CFD2. Two (2) 26.5" 4-pod light bars w/driver side (3) red and (1) multi-color pods officer side (2) red (1) green and (1) multi-color pods with red/green/clear lenses. Location: [#LOC]. | $4,328 |
| 5300-0371 | Light bar Federal Signal Split Vision VSLR8S-CHI. Two (2) 26.5" 4-pod light bars w/driver side (3) red and (1) multi-color pods officer side (2) red (1) green and (1) multi-color pods with red and clear lenses. Location: [#LOC]. | $4,328 |
| 5300-0372 | Light bar Whelen Freedom 72" LED with 3M Opticom and MKEZ7 mounts. Includes (12) red LED and clear lenses. N/A INTL Chassis. Location: Centered on the front cab roof. | $6,648 |
| 5300-0373 | Light bar Code 3 model 2758NFPA1CC LED red with clear lenses. Location: Centered on the front cab roof. | $3,242 |
| 5300-0374 | Light bar Code 3 LED model 2722NFPA1 (PR) 22" Long. All red with clear lens. Location:[#LOC]. | $3,797 |
| 5300-0375 | Light bar Federal Signal Split Vision VSLR8-NFPA4. Two (2) 26.5" 4-pod light bars w/ (2) red and (2) multi-color pods on each bar with clear lenses. Location: [#LOC]. | $5,247 |
| 5300-0376 | Light bar Federal Signal Split Vision VSLR6-NFPA1. Two (2) 21" 3-pod light bars w/ (2) red and (1) multi-color pods on each bar with clear lenses. Location: [#LOC]. | $3,946 |
| 5300-0379 | Light bar Whelen Freedom model FN72VLED 72" LED with MKEZ7 mounts. Includes (12) red LED and (2) white LED. N/A INTL Chassis. Location: Centered on the front cab roof. | $5,280 |
| 5300-0380 | Light bar Federal Signal JetSolaris 60" LED. Blue Solaris reflectors with clear domes. NFPA compliant. Does not require 2 addl side facing bars. Location: Centered on the front cab roof. | $2,765 |
| 5300-0381 | Light bar Federal Signal ADX2205 LED with clear lenses(PR). Location: [#LOC] | $5,489 |
| 5300-0382 | Light bar Federal Signal Split Vision VSLR8S-CFD2. Two (2) 26.5" 4-pod light bars w/ (3) red with red domes and (1) multi-color pod with clear dome on driver and (2) red with red domes (1) multi-color with clear dome and (1) green with clear dome. Location: [#LOC]. | $4,595 |
| 5300-0383 | Light bar Federal Signal JetStream JLX54HH-00011 with all lenses clear 54" LED. Red Solaris reflectors each side and (2) center TCL lights. Location: Centered on the front cab roof. | $2,909 |
| 5300-0384 | Light bar Code 3 model XL5000 74" with R/R/R/B lenses. Location: Centered on the front cab roof. | $2,036 |
| 5300-0385 | Light bar Whelen Freedom model FN72QLED 72" LED with MKEZ7 mounts. Includes (8) red LED (2) white LED and (2) dual LR11 LED take down lights. N/A INTL Chassis. Location: Centered on the front vista cab roof. | $4,996 |
| 5300-0386 | Light bar Code 3 model 21TR 69". Includes: (4) corner mounted red TRS6 LED modules (2) side facing red TRS3 LED modules and (7) forward facing red LED modules R/R/W/R/W/R/R w/clear lenses. Location: Centered on the front cab roof. | $2,419 |
| 5300-0387 | Whelen Mini-Freedom LED light bars (PR) model FT8RRRRF 28.25" with MK8H high mounts. Location: [#LOC]. Lense colors: Clear. | $4,415 |
| 5300-0388 | Light bar Whelen Freedom model FN72QLED 72" LED with clear lenses and MKEZ7 mounts. Includes (8) red LED and (4) white LED. N/A INTL Chassis. Location: Centered on the front cab roof. | $4,847 |
| 5300-0389 | Light bar Whelen Freedom model FN66QLED 66" with MK8H high mounts. All LED light bar without rear facing LEDs. Location: Centered on the front cab roof. | $4,007 |

| Item No. | Description | |
|---|---|---|
| 5300-0390 | Light bar Whelen Freedom model FN72QLED 72" LED with MK8 high mounts. Includes (8) red LED (2) blue LED and (2) white LED. N/A INTL Chassis. Location: Centered on the front cab roof. | $4,628 |
| 5300-0391 | Light bar Federal Signal Split Vision VSLR8. Two (2) 26.5" 4-pod light bars. Driver w/ (2) red and (2) multi-color pods with clear lenses; officer w/ (3) red and (1) multi-color pods with clear lenses. Location: [#LOC]. | $5,247 |
| 5300-0393 | Light bar Whelen Freedom model FN72VLED 72" LED with MKEZ7 mounts. Includes (10) red LED and (2) white LED. N/A INTL Chassis. Location: Centered on the front cab roof. | $4,708 |
| 5300-0395 | Whelen Mini-Freedom Rota-Beam LED light bars (PR) 24" with clear lenses and MKEZ7 mounts. Location: [#LOC]. | $5,956 |
| 5300-0396 | Light bar Whelen Freedom 72" LED with MK8 high mounts and clear lenses. Includes (5) red Rota-Beam LED (4) red LED and (4) white LED. N/A INTL Chassis. Location: Centered on the front cab roof. | $6,266 |
| 5300-0397 | Light bar Whelen Freedom model FN72QLED 72" LED with MKEZ7 mounts. Includes (10) red LED and (2) white LED. N/A INTL Chassis. Location: Centered on the front cab roof. | $4,905 |
| 5300-0398 | Light bar package Whelen 4500 LED (4) bar package. Includes: (2) diagonal 24'' LED bars and (2) 28'' side LED bars over canopy windows. | $8,408 |
| 5300-0399 | Light bar Whelen Freedom model FN72QLED 72" LED with GTT Opticom clear lenses and MKEZ7 mounts. Includes (6) red LED (2) blue LED and (2) white LED. N/A INTL Chassis. Location: Centered on the front cab roof. | $6,708 |
| 5300-0400 | Light bar Whelen Freedom model FN72QLED 72" LED with GTT Opticom red lenses and MKEZ7 mounts. N/A INTL Chassis. Location: Centered on the front cab roof. | $6,565 |
| 5300-0401 | Light bar Whelen Freedom 72" LED with MKEZ7 mounts and clear lenses. Includes (6) Rota-Beam LED (4-red 2-white) (2) green LED (2) red LED (2) dual LR11 alley lights (2) LR11 take down lights and GTT 795H Opticom. N/A INTL Chassis. Location: Centered on the front cab roof. | $7,213 |
| 5300-0403 | Whelen Mini-Freedom Rota-Beam LED light bars (PR) 28.25" with R/C/R lenses (2) red and (1) white Rota-Beam LED lights and MK8H high mounts. Location: [#LOC]. | $5,732 |
| 5300-0404 | Light bar Whelen Freedom 72" LED with MK8 high mounts and red / clear lenses. Includes (6) red Rota-Beam LED (1) white Rota-Beam LED and (4) red LED. N/A INTL Chassis. Location: Centered on the front cab roof. | $5,834 |
| 5300-0405 | Whelen Mini-Freedom LED light bar package with MKEZ7 mounts. (1) model FT8RCCRF centered on front cab roof (1) FT8RRRRF each side front cab corner at 30 degree angle. Lense colors: Clear. | $5,665 |
| 5300-0406 | Light bar Whelen Freedom 72" LED with MK8H high mounts and clear lenses. Includes (6) red Rota-Beam LED (1) white Rota-Beam LED (2) red LED and (2) white LED. N/A INTL Chassis. Location: Centered on the front cab roof. | $6,080 |
| 5300-0407 | Light bar Whelen Freedom 60" LED with MK8 high mounts and clear lenses. Includes (6) red Rota-Beam LED (1) white Rota-Beam LED and (2) white LED. N/A INTL Chassis. Location: Centered on the front cab roof. | $5,584 |
| 5300-0409 | Light bar Whelen Freedom model FN55QLED 55" LED with MKEZ7 mounts. Location: Centered on the front cab roof. | $3,367 |
| 5300-0410 | Light bar Federal Signal JetSolaris 60" LED. Red Solaris reflectors with red domes. NFPA compliant. Does not require 2 addl side facing bars. Location: Centered on the front cab roof. | $2,765 |
| 5300-0411 | Light bar Whelen Freedom model FN82QLED 82" LED with clear lenses Opticom and MKEZ7 mounts. Includes (12) red LED and (2) white LED. N/A INTL Chassis. Location: Centered on the front cab roof. | $6,651 |
| 5300-0412 | Light bar Federal Signal Legend 70" LED with red/white diodes and clear lenses. Location: Centered on the front cab roof. | $4,213 |
| 5300-0413 | Light bar Federal Signal Navigator model NVG73-EONE 73" with (6) red and (2) white Quadraflare LED lights. Location: Centered on the front cab roof. | $3,426 |
| 5300-0414 | Light bar Federal Signal Legend. (2) 24" light bars LED. Lenses color: clear. (1) Model number LGD24Z-2655171 and (1) model number LGD24Z-2655292. Location: [#LOC]. | $2,162 |
| 5300-0415 | Light bar Federal Signal Navigator model NVG73-NFPA3 73" with (2) red SLR rotators (2) red / white SLR rotators and (4) red Quadraflare LED lights. Location: Centered on the front cab roof. | $3,821 |
| 5300-0416 | Whelen Mini-Freedom Rota-Beam LED light bars (PR) 24" with clear lenses and MK8H high mounts. Location: [#LOC]. | $6,012 |
| 5300-0417 | Light bar Whelen Freedom 72" LED with MKEZ7 mounts and clear lenses. Includes (5) red Rota-Beam LED and (2) white Rota-Beam LED. N/A INTL Chassis. Location: Centered on the front cab roof. | $5,037 |

| Item No. | Description | |
|---|---|---|
| 5300-0418 | Whelen Ultra Freedom Micro Edge LED (PR) model MCFLED25 clear lens with red LEDs. Location [#LOC]. When used at front cab corners requires additional lighting to meet NFPA. | $2,020 |
| 5300-0419 | Whelen Mini-Freedom LED light bars (PR) model FNMINI 24" with clear lenses and low profile MK9 mounts. Location: [#LOC]. | $4,592 |
| 5300-0420 | Whelen Mini-Freedom LED side facing light bars (PR) model FT8RRRRF 24" with low profile MK9 mounts. Location: [#LOC]. Lense colors: Red. | $4,399 |
| 5300-0421 | Light bar Whelen Freedom 72" LED with MKEZ7 mounts and clear lenses. Includes (8) red Rota-Beam LED and GTT 795H Opticom. N/A INTL Chassis. Location: Centered on the front cab roof. | $6,796 |
| 5300-0422 | Light bar Whelen Freedom model FN72VLED 72" LED with 795H Opticom and MKEZ7 mounts. Includes (6) red LED (4) blue LED and (2) white LED. N/A INTL Chassis. Location: Centered on the front cab roof. | $7,701 |
| 5300-0423 | Light bar Whelen Freedom model FN66VLED 66" with dual LR11 alley lights dual LR11 takedown lights and MKEZ7 mounts. All LED light bar. Location: Centered on the front cab roof | $4,333 |
| 5300-0424 | Light bar Whelen Freedom 72" LED with MKEZ7 mounts and red/clear lenses. Includes (8) red Rota-Beam LED and GTT 795H Opticom. N/A INTL Chassis. Location: Centered on the front cab roof. | $6,796 |
| 5300-0427 | Light bar Whelen Freedom model FN55VLED 55" LED with PE215 emitter (4) red driver LED (4) blue officer LED and MKEZ7 mounts and clear lenses. N/A with Vista roofs with front facing windows. Location: Centered on the front cab roof. | $4,307 |
| 5300-0428 | Light bar Whelen Freedom model FN66QLED 66" with MKEZ7 mounts. Red/blue/clear LED light bar without rear facing LEDs. Location: Centered on the front cab roof. | $3,959 |
| 5300-0429 | Light bar Whelen Freedom model FN72QLED 72" LED red/blue with MKEZ7 mounts and red/clear/blue lenses. N/A INTL Chassis. Location: Centered on the front cab roof | $4,060 |
| 5300-0430 | Light bar Power Arc model LED VM6004-3P 60" long. Lenses color: R/R/R/W/R/R/R Location: center front cab roof. | $3,592 |
| 5300-0431 | Light bar Federal Signal Navigator model NVG25-NFPA3 LED (PR). Includes (3) QL64 red and (2) QL73 red in each bar with clear lenses. Location: [#LOC] | $3,553 |
| 5300-0432 | Light bar Federal Signal Navigator model NVG25 (PR). Includes (3) QL64 red and (2) QL73 red in each bar with red lenses. Location: [#LOC] | $3,553 |
| 5300-0433 | Light bar Federal Signal Navigator model NVG25-0001 (PR). Includes (2) SLR rotators red/white and (1) QL64 red in each bar with clear lenses. Location: [#LOC] | $3,491 |
| 5300-0441 | Light bar Whelen Freedom model FN88VLED 88" LED with MKEZ7 mounts and clear lenses. Includes (10) red (6) white LEDs and (2) dual LR11 alley lights. N/A commercial Chassis. Location: Centered on the front cab roof | $6,522 |
| 5300-0442 | Light bar Whelen Freedom model FN72VLED 72" LED with 795H Opticom and MKEZ7 mounts. Includes (8) red LED and (4) blue LED. N/A INTL Chassis. Location: Centered on the front cab roof. | $7,701 |
| 5300-0443 | Light bar Federal Signal Navigator model NVG25-NFPA-D & -P LED (PR). Includes (2) QL64 red (1) QL64 split red/white and (1) QL73 red in each bar with clear lenses. Location: [#LOC] | $3,553 |
| 5300-0444 | Light bar Federal Signal Navigator model NVG73-FLNDRS 73" with (2) red SLR rotators (2) red/white SLR rotators (2) red/white Quadraflare LED and (2) blue Quadraflare LED lights. Location: Centered on the front cab roof. | $4,349 |
| 5300-0445 | Federal JLX7250-NFPA LED Light bar 72". Includes (8) red 6-LED reflectors (3) white 6-LED reflectors and (6) red 3-LED reflectors. The lenses shall be clear. No rear lighting. | $4,524 |
| 5300-0446 | Whelen Mini-Freedom LED light bars (4) 24" with clear lenses and MKEZ7 mounts. Includes red/clear/blue driver and blue/clear/red officer. Location: (1) each side front cab corner at 20 degree angle (1) each side over rear cab doors. | $12,016 |
| 5300-0448 | Light bar Whelen Freedom model FN72VLED 72" LED with MK8H high mounts. Includes (11) red LED (2) white LED and (1) green LED. N/A INTL Chassis. Location: Centered on the front cab roof. | $5,104 |
| 5300-0449 | Light bar Whelen Freedom model FN72QLED 72" LED with 3M Opticom clear lenses (4) red LEDs' (2) blue LEDs' (2) clear LEDs' and MKEZ7 mounts. N/A INTL Chassis. Location: Centered on the front cab roof. | $6,565 |
| 5300-0450 | Light bar Whelen Freedom model FN72VLED 72" LED with Opticom and MKEZ7 mounts. Includes (10) red LED (2) blue LED and (2) white LED. N/A INTL Chassis. Location: Centered on the front cab roof. | $6,948 |
| 5300-0451 | Light bar Power Arc model LED VM8504GLP-6P 85" long. Lenses color: R/R/B/R/W/W/R/B/R/R. Includes (2) Go-Lights with controls. Location: center front cab roof. | $6,599 |
| 5300-0453 | Light bar Whelen Freedom model FN72VLED 72" LED with MKEZ7 mounts and clear lenses. Includes (10) red LED (2) white LED (2) dual LR11 alley lights and (2) dual LR11 takedown lights. N/A INTL Chassis. Location: Centered on the front cab roof. | $5,316 |

| Item No. | Description | |
|---|---|---|
| 5300-0454 | Whelen Mini-Freedom LED light bars (PR) model FNMINI 24" with red/clear lenses driver blue/clear lenses officer and MK9 low mounts. Location: [#LOC]. | $4,592 |
| 5300-0455 | Whelen Mini-Freedom Rota-Beam LED light bars (PR) 24" with clear lenses and MKEZ7 mounts. Location: [#LOC]. | $5,956 |
| 5300-0456 | Light bar Whelen Justice 56" LED with clear lenses and MKEZ7 mounts. N/A on Vista roofs with front facing windows. Includes (4) corner facing LIN6 LED lights (red driver blue officer) (6) forward facing CON3 Linear LED lights; (3) red driver and (3) blue officer. Location: Centered on the front cab roof. | $2,423 |
| 5300-0459 | Light bar Whelen Freedom model FN72VLED 72" LED with MKEZ7 mounts and PE215 emitter. Includes (8) red LED and (4) blue LED. N/A INTL Chassis. Location: Centered on the front cab roof. | $5,640 |
| 5300-0460 | Tomar Scorpion model 970L-2603-0101 LED all red with rear blank NFPA light bars (PR). Location: [#LOC]. | $3,808 |
| 5300-0461 | Light bar Whelen Freedom model FN72QLED 72" LED with MK8 high mounts and red/clear lenses. Includes (10) red LED and (4) white LED. N/A INTL Chassis. Location: Centered on the front cab roof. | $5,706 |
| 5300-0462 | Light bar Federal Signal Split Vision VSLR6S-CHI3. Two (2) 21" 3-pod light bars w/ (1) red pod (1) multi-color pod and (1) blue pod on each bar with clear lenses. Location: [#LOC]. | $3,612 |
| 5300-0463 | Wire light bars using Deutsch connectors on exterior for maintenance/replacement. | $178 |
| 5300-0464 | Whelen Mini-Freedom LED light bar model FNMINI 28.25" with Opticom MKEZ7 mounts and clear lenses. Location: center front of cab. Requires additional forward facing lightbars. | $3,228 |
| 5300-0465 | Light bar Whelen Freedom model FN55QLED 55" LED with takedown lights MKEZ7 mounts and red lenses. Location: Centered on the front cab roof. | $3,886 |
| 5300-0466 | Light bar Whelen Freedom 60" LED with MKEZ7 mounts and clear lenses. Includes (6) red Rota-Beam LED and (2) white Rota-Beam LED. Location: Centered on the front cab roof. | $5,693 |
| 5300-0467 | Whelen Mini-Freedom Rota-Beam LED light bars (PR) 28.25" with clear lenses (1) red (1) white and (1) blue Rota-Beam LED lights with MKEZ7 mounts. Location: [#LOC]. | $5,686 |
| 5300-0468 | Light bar Whelen Freedom 82" LED with MKEZ7 mounts and clear lenses. Includes (8) Rota-Beam LED (6-red 2-white) (2) red LED and GTT 795H Opticom. N/A INTL Chassis. Location: Centered on the front cab roof. | $7,836 |
| 5300-0470 | Light bar Whelen Freedom model FN55QLED 55" LED with (6) red LED (6) white LED and MKEZ7 mounts. Location: Centered on the front cab roof. | $3,977 |
| 5300-0471 | Whelen Mini-Freedom LED side facing front cab light bars (PR) model FT8RRCRF 24" with MKEZ7 mounts. (3) red LEDs (1) white with clear lenses. For use on rear mount platforms with supplemental upper level Zone A warning lights. Locate one each side front cab corners side facing. | $4,399 |
| 5300-0473 | Whelen F4 Mini-Freedom LED light bars (PR) 21.5" with MKEZ7 mounts. Red and white LEDs with clear lense. Location: [#LOC]. | $4,592 |
| 5300-0474 | Light bar Federal Signal Split Vision VSLR6. Two (2) 21" 3-pod light bars w/ (2) red pods and (1) multi-color pod on each bar with red/clear lenses. Location: [#LOC]. | $3,552 |
| 5300-0475 | Light bar Whelen Freedom model FN72QLED 72" LED GTT Opticom with MKEZ7 mounts. Includes (4) red LED (2) blue LED and (2) white LED. N/A INTL Chassis. Location: Centered on the front cab roof | $5,516 |
| 5300-0476 | Light bar Federal Signal Legend. (2) 24" light bars red LED side facing only. Lenses color: clear. Location: [#LOC]. | $2,512 |
| 5300-0477 | Light bar Federal Signal Navigatorl NVG25 LED (PR). Includes (2) QL64 red (1) QL64 white and (2) QL73 red in each bar with clear lenses. Location: [#LOC] | $3,608 |
| 5300-0478 | Light bar Federal Signal Navigator model NVG87 87" with (8) red and (6) red/white Quadraflare LED lights. Location: Centered on the front cab roof. | $4,623 |
| 5300-0479 | Light bar Whelen Justice 56" LED with clear lenses and MKEZ7 mounts. N/A on Vista roofs with front facing windows. Includes (4) corner facing red LIN6 LED lights (6) forward facing CON3 Linear LED lights; (2) red (2) clear and (2) blue. Location: Centered on the front cab roof. | $2,423 |
| 5300-0480 | Light bar Whelen Freedom model FN72VLED 72" LED with MKEZ7 mounts. Includes (10) red LED (4) blue and (2) white LED. N/A INTL Chassis. Location: Centered on the front cab roof. | $5,555 |
| 5300-0481 | Light bar Code 3 model RMX91-ALRC-100. Upper deck contains (9) R-12 LED modules left and right alley lights. Lower deck contains (2) red R-12 steady burn LED modules (4) R-12 red LED modules (4) takedown lights and 795 emitter. Location: Centered on the front cab roof. | $6,010 |
| 5300-0482 | Light bar Federal Signal Legend 70" LED with red/white/blue diodes and clear lenses. Location: Centered on the front cab roof. | $2,095 |

| Item No. | Description | |
|---|---|---|
| 5300-0483 | Whelen F4 Mini-Freedom LED side facing front cab light bars (PR) 21.5" with MKEZ7 mounts. Red and white LEDs with clear lense. For use on rear mount platforms with supplemental upper level Zone A warning lights. Locate one each side front cab corners side facing. | $4,397 |
| 5300-0484 | Light bar Federal Signal Split Vision VSLR8S. Two (2) 26.5" 4-pod light bars w/ (2) red (1) blue and (1) multi-color pods with clear lenses. Location: [#LOC]. | $4,328 |
| 5300-0485 | Whelen Mini-Freedom LED light bars (PR) model FNMINI 24" with clear lenses (1) officer side blue LED and MKEZ7 mounts. Location: [#LOC]. | $4,592 |
| 5300-0486 | Light bar Federal Signal JetStream 60'' LED. Red Solaris reflectors and 3M 792 Opticom. Red domes each side with clear center. Location: Centered on the front cab roof | $4,850 |
| 5300-0487 | Light bar Whelen Freedom model F4X7 60" LED with clear lenses and MKEZ7 mounts. Includes (10) red LED (4) white LED and side facing TIR6 alley lights. N/A INTL Chassis. Location: Centered on the front cab roof. | $5,515 |
| 5300-0488 | Whelen Mini-Freedom Rota-Beam LED light bars (PR) 24" with Amber LED with clear lenses and MKEZ7 mounts. Location: [#LOC]. | $5,956 |
| 5300-0489 | Light bar Whelen Freedom IV Model F4N7QLED 72" LED with MKEZ7 mounts. (6) Red and (2) white LEDs with clear lense and no rear facing LEDs. Location: Centered on the front cab roof. | $4,060 |
| 5300-0490 | Light bar Whelen Freedom IV 60" LED with MKEZ7 mounts. Red and white LEDs with clear lense and no rear facing LEDs. Location: Centered on the front cab roof. | $3,959 |
| 5300-0491 | Whelen F4 Mini-Freedom LED light bars (PR) 21.5" with MKEZ7 mounts. Red and white LEDs clear lenses and red filters. Location: [#LOC]. | $4,592 |
| 5300-0492 | Whelen F4 Mini-Freedom LED side facing light bars (PR) 21.5" with MKEZ7 mounts. Red LEDs with clear lense. Location: [#LOC]. | $3,911 |
| 5300-0493 | Light bar Whelen Freedom IV Model F4N7QLED 72" LED with MKEZ7 mounts. (8) Red and (2) white LEDs with clear lense and no rear facing LEDs. Location: Centered on the front cab roof. | $4,512 |
| 5300-0494 | Light bar Whelen Freedom IV Model F4N7QLED 72" LED with MKEZ7 mounts. (6) Red w/ filters and (2) white LEDs with clear lenses and no rear facing LEDs. Location: Centered on the front cab roof. | $4,178 |
| 5300-0495 | GTT 795H Opticom centered in forward facing Whelen Freedom IV light bar. | $1,956 |
| 5300-0496 | Light bar Whelen Freedom model F4N7VLED 72" LED with MKEZ7 mounts. (6) Red and (2) white LEDs with clear lense. N/A INTL Chassis or Vista roofs with front facing windows. Location: Centered on the front cab roof. | $4,060 |
| 5300-0497 | Whelen F4 Mini-Freedom LED light bars (PR) 21.5" with MK9 mounts. Red and white LEDs clear lenses and red filters. Location: [#LOC]. | $4,592 |
| 5300-0499 | Whelen F4 Mini-Freedom LED side facing front cab light bars (PR) 21.5" with MKEZ7 mounts. Red LEDs with clear lenses and red filters. For use on rear mount platforms with supplemental upper level Zone A warning lights. Locate one each side front cab corners side facing. | $4,399 |
| 5300-0500 | Whelen F4 Mini-Freedom LED light bars (PR) 21.5" with MKEZ7 mounts. Red and white driver LEDs; blue and white officer LEDs' with clear lenses and red/blue filters. Location: [#LOC]. | $4,592 |
| 5300-0501 | Whelen F4 Mini-Freedom LED side facing light bars (PR) 21.5" with MKEZ7 mounts. Red and blue LEDs with clear lenses. Location: [#LOC]. | $3,911 |
| 5300-0502 | Light bar Whelen Freedom IV Model F4N7QLED 72" LED with MKEZ7 mounts. (4) Red (4) Blue and (2) white LEDs with clear lenses and no rear facing LEDs. Location: Centered on the front cab roof. | $4,512 |
| 5300-0503 | Whelen MK9S short slide bolt bracket mount for front light bar (PR). | $63 |
| 5300-0504 | Whelen MKEZ7 1.5" standard mount for front light bar (PR). | $50 |
| 5300-0505 | Whelen MK8H 5" high mount for front light bar (PR). | $125 |
| 5300-0507 | Light bar Whelen Freedom IV Model F4X7 72" with 14 LED modules. Location: Centered on the front cab roof. | $5,581 |
| 5300-0508 | Whelen Mini-Freedom IV side facing light bars (PR) 21.5" with 4 LED modules. Location: [#LOC]. | $3,861 |
| 5300-0509 | Light bar Whelen Freedom IV Model F4X7 72" with 12 LED modules. Location: Centered on the front cab roof. | $5,053 |
| 5300-0510 | Light bar Whelen Freedom IV Model F4X7 72" with 10 LED modules. Location: Centered on the front cab roof. | $4,462 |
| 5300-0511 | Light bar Whelen Freedom IV Model F4X7 72" with 8 LED modules. Location: Centered on the front cab roof. | $4,010 |
| 5300-0512 | Light bar layout per customer specific requirements. | $254 |
| 5300-0513 | Colored filters for Whelen Freedom IV light bar. | $79 |
| 5300-0514 | Whelen MK9S short slide bolt bracket mount for mini front light bars (4). | $127 |
| 5300-0515 | Whelen MKEZ7 1.5" standard mount for mini front light bars (4). | $100 |

| Item No. | Description | |
|---|---|---|
| 5300-0516 | Whelen MK8H 5" high mount for mini front light bars (4). | $250 |
| 5300-0517 | Whelen MK9S short slide bolt bracket mount for mini side facing light bars (4). | $127 |
| 5300-0518 | Whelen MKEZ7 1.5" standard mount for mini side facing light bars (4). | $100 |
| 5300-0519 | Whelen MK8H 5" high mount for mini side facing light bars (4). | $250 |
| 5300-0522 | Light bar Whelen Freedom IV Model F4X0 60" with 8 LED modules. Location: Centered on the front cab roof. | $4,010 |
| 5300-0523 | Whelen F4 Mini-Freedom LED side facing front cab light bars (PR) 21.5" . For use on rear mount platforms with supplemental upper level Zone A warning lights. Locate one each side front cab corners side facing. | $4,298 |
| 5300-0524 | Whelen F4 Mini-Freedom LED light bars (PR) 21.5" with 5 LEDs in each bar. Location: [#LOC]. | $4,492 |
| 5300-0525 | Whelen TIR6 takedown lights for Freedom IV lightbar (PR). | $512 |
| 5300-0526 | Whelen F4 Mini-Freedom LED light bars (3) 21.5" with 5 LEDs' in each outer bar 4 LED's in center bar Location: Center front of cab roof and front cab corners at 45 degree angle. | $6,422 |
| 5300-0527 | Light bar Federal Signal Navigator NVG25 LED (PR) side facing. Includes (3) QL64 red/white in each bar with clear lenses. Location: [#LOC] | $2,950 |
| 5300-0529 | Light bar Whelen Freedom IV Model F4X0 55" with 8 LED modules. Location: Centered on the front cab roof. | $3,377 |
| 5300-0530 | Light bar Federal Signal Navigator NVG25 LED side facing (PR). Includes (1) QL73 red (1) QL64 red/white and (1) red LED rotator in each bar with clear lenses. Location: [#LOC]. | $2,938 |
| 5300-0531 | Light bar Federal Signal Navigator NVG25 LED (PR). Includes (2) QL64 red (2) QL64 red/white and (1) red/white LED rotator in each bar with clear lenses. Location: [#LOC]. | $3,670 |
| 5300-0533 | Light bar package Whelen 4500 LED (3) bar package. Includes: (1) 40'' LED front bar w/ Opticom and (2) diagonal 24'' LED bars. | $9,144 |
| 5300-0534 | Light bar Federal Signal Navigator model NVG87 87" with (10) red and (4) red/white Quadraflare LED lights. Center red/white LEDs' to flash in an "X" pattern. Location: Centered on the front cab roof. | $4,623 |
| 5300-0535 | Light bar Federal Signal Navigator NVG25 LED (PR). Includes (2) QL64 red (1) QL64 split red/white and (2) QL73 red in each bar with clear lenses. Location: [#LOC] | $3,608 |
| 5300-0536 | Light bar Whelen Freedom IV Model F4R7 72" with 9 Rotabeam and 4 LED modules. Location: Centered on the front cab roof. | $7,159 |
| 5300-0538 | Steady burn additional red LED module forward facing in officer side of Whelen light bar to meet California DOT. | $250 |
| 5300-0539 | Steady burn additional green LED module forward facing in officer side of Whelen light bar. | $276 |
| 5300-0542 | Light bar Federal Signal Navigator model NVG18 LED (PR). Includes (2) QL64 split red/white and (1) QL73 red in each bar with clear lenses. Location: [#LOC] | $2,827 |
| 5300-0543 | Light bar Federal Signal Navigator model NVG25-0001 (PR). Includes (2) SLR red/white rotators and (1) red QL64 in each bar with clear lenses. Location: [#LOC] | $3,656 |
| 5300-0549 | 2" standard mount for mini front Federal Navigator light bars (4). | $146 |
| 5310-0000 | Light bar Federal Signal Signal Master SML6. Location:  installed at the rear of the apparatus. | $916 |
| 5310-0001 | Light bar Federal Signal Signal Master SML8. | $1,007 |
| 5310-0002 | Light bar Federal Signal Signal Master SMLED6. | $1,562 |
| 5310-0003 | Light bar Federal Signal Signal Master SMLED8. | $1,650 |
| 5310-0005 | Whelen Traffic Advisor Model TA837A - 43.25" long. | $1,140 |
| 5310-0006 | Whelen Traffic Advisor Model TA870A - 62" long. | $1,786 |
| 5310-0011 | Light bar CODE 3 model AS10S Arrowstik 47" long. Mounted center rear body. | $1,317 |
| 5310-0012 | Diamond plate shield over rear directional light. | $327 |
| 5310-0014 | Light bar CODE 3 model AS839 Arrowstik 39" long. Lenses to be amber with red on the ends. Mounted center rear body. | $1,076 |
| 5310-0015 | Light bar CODE 3 model NASL839 LEDX Narrowstik 40.5" long. Lights heads are amber with red on the ends. Mounted center rear body. | $1,917 |
| 5310-0017 | Whelen Traffic Advisor model TAL65 LED - 36" long. | $1,412 |
| 5310-0018 | Whelen Traffic Advisor Model TAM65 LED - 36" long. | $1,826 |
| 5310-0019 | Light bar Code 3 model NASL847 LED Narrowstik 47" long. Mounted on rear of body. | $1,914 |
| 5310-0021 | Light bar CODE 3 model NASL839 LEDX Narrowstik 40.5 inches long. Mounted center rear body. | $1,917 |
| 5310-0023 | Light bar CODE 3 model NASL630 LEDX Narrowstik 30.5 inches long. | $1,719 |
| 5310-0025 | Directional light circuit wiring through upper level warning. | $81 |
| 5310-0027 | Whelen Traffic Advisor Model TAM85 LED - 47" long. | $2,555 |
| 5310-0028 | Whelen Traffic Advisor Model TAM83 LED - 31" long. | $1,871 |
| 5310-0029 | Smooth plate shield painted job color over rear directional light. | $566 |
| 5310-0030 | Whelen Traffic Advisor Model TA870L LED- 62" long. | $3,662 |

| Item No. | Description | |
|---|---|---|
| 5310-0031 | Whelen Traffic Advisor model TA-4437M LED split (2) 22.75" long. Locate one each side on rear panel of body. | $2,139 |
| 5310-0035 | Whelen Traffic Advisor Model TAL85 LED - 47" long. | $1,778 |
| 5310-0042 | Whelen Traffic Advisor Model TAZ86 LED - 31" long. | $2,350 |
| 5310-0043 | Whelen Traffic Advisor Model TANF65 LED - 34" long. | $1,797 |
| 5310-0044 | Light bar Federal Signal Signal Master Viper EXT LED 42" with 8 lights. | $1,869 |
| 5310-0045 | Light bar Federal Signal Signal Master Viper EXT LED 31" with 6 lights. | $1,651 |
| 5310-0046 | Whelen Traffic Advisor Model TANF85 LED - 45" long. | $2,220 |
| 5310-0053 | Whelen Traffic Advisor model TA-4437M LED split (2) 22.75" long. Locate one each side on rear upper body extrusion above B2 and B3. | $2,139 |
| 5310-0054 | Light bar Federal Signal Signal Master Plus SMLED-PLS-6. | $1,393 |
| 5310-0055 | Light bar Federal Signal Master Viper EXT LED 31" with 6 lights with clear lenses. | $1,651 |
| 5310-0056 | Whelen Traffic Advisor model TAL65 LED - 36" long. Locate surface mounted on driver and officer side of body up high approx. centered. | $1,412 |
| 5310-0058 | Whelen Traffic Advisor Model TADP8 LED - 30" long. Includes TADCTL1 controller. | $2,231 |
| 5310-0059 | Whelen Traffic Advisor Model TAD8 LED - 30" long. Includes TADCTL1 controller. | $1,888 |
| 5310-0060 | Whelen Traffic Advisor Model TAZ66 LED - 23.25" long. | $1,887 |
| 5310-0061 | Brushed stainless steel shield over rear directional light. | $377 |
| 5310-0062 | Light bar Tomar model LSTICK13W6 24.5" long with amber light heads. | $1,329 |
| 5310-0063 | Federal Signal Viper EXT Model VPX800-2 LED w/ bezel (PR). Surfaced mounted with clear lens wired through ignition. Location: above rear ladder tunnel door. | $570 |
| 5310-0064 | Whelen Traffic Advisor Model TAM63 LED - 24" long. | $1,729 |
| 5310-0065 | Light bar Tomar model LSTICK13W6 24.5" long with amber light heads. | $1,329 |
| 5310-0066 | Whelen Traffic Advisor Model TAM8348 LED - 48" long. | $2,016 |
| 5310-0068 | Whelen Traffic Advisor Model TAD8RB LED - 30" long. Includes red driver and blue officer warning with TADCTL1 controller. | $1,888 |
| 5350-0000 | Camera backup Intec with monochrome monitor. | $4,718 |
| 5350-0001 | Camera back-up Safety Vision LCD model SV-CLCD70BA-625B with audio. For use with up to 2 cameras. | $2,129 |
| 5350-0004 | FireCom intercom jack on the turntable. (N/A with three-way aerial intercom). | $1,142 |
| 5350-0005 | FireCom intercom jacks. (1) turntable jack and (1) tip jack. (N/A with three-way aerial intercom). | $1,915 |
| 5350-0006 | FireCom intercom jacks. (1) turntable jack and (2) tip jacks. N/A with two or three-way aerial intercom. | $2,370 |
| 5350-0025 | Back up camera for Vehicle Information Control Center. Video displays automatically when transmission is in reverse. | $718 |
| 5350-0026 | Side facing camera mtd up high on officer side of the cab centrally located (above canopy window if applicable) interlocked with right turn signal. Displays video on vehicle information control center. | $718 |
| 5350-0027 | Side facing camera mtd up high on driver side of the cab centrally located (above canopy window if applicable) interlocked with left turn signal. Displays video on vehicle information control center. | $718 |
| 5350-0028 | Forward facing camera mounted (approximately) center of cab. | $718 |
| 5350-0048 | Setcom intercom system with (6) cab jacks and (1) pump panel jack. Custom cabs only. Headsets to be shipped loose. | $9,332 |
| 5350-0054 | Safety Vision officer's side camera. Requires Safety Vision back-up camera option. SV-620 Kit w/ SV-523. Camera to be located on officer's side mirror. | $932 |
| 5350-0060 | Diamond plate camera shield. | $219 |
| 5350-0061 | Safety Vision driver's side camera. Requires Safety Vision back-up camera option. SV-620 Kit w/ SV-523. Camera to be located on driver's side mirror. | $932 |
| 5350-0069 | FireCom intercom prewire. Includes a PP20 jack at pump operator's panel and aerial turntable. Wiring to be run to officer's side overhead console. | $1,450 |
| 5350-0070 | Voyager back-up camera. Video displays automatically when transmission is in reverse. Camera only - does not include monitor. | $725 |
| 5350-0071 | Voyager side mtd rear facing camera positioned up high on officer side of the cab centrally located (above canopy window if applicable) interlocked with right turn signal. Camera only - does not include monitor. | $706 |
| 5350-0072 | Voyager side mtd rear facing camera positioned up high on driver side of the cab centrally located (above canopy window if applicable) interlocked with left turn signal. Camera only - does not include monitor. | $706 |
| 5350-0073 | Voyager forward facing camera mounted upper center area of cab. | $663 |

| Item No. | Description | |
|---|---|---|
| 5350-0074 | Sigtronics US-45S intercom system with (4) cab jacks (1) pump panel jack four headsets / hooks PTT switches for driver / ppnl. Does not include radio interface cable. Custom cabs only. Headsets to be shipped loose. | $4,446 |
| 5350-0076 | David Clark model 3800 intercom system with (5) cab head sets. Headsets to be shipped loose. | $7,298 |
| 5350-0078 | Smooth plate camera shield painted job color (match the "two tone" sale code color if two tone applies). | $338 |
| 5350-0079 | Sigtronics US-45D intercom system with (3) cab jacks (1) pump panel jack three headsets / hooks PTT switches for driver/officer/ppnl. Does not include radio interface cable. Custom cabs only. Headsets to be shipped loose. | $4,197 |
| 5350-0080 | Camera back-up Safety Vision LCD model SV-CLCD70A-625B with split screen capable monitor and audio. For use with up to 4 cameras. | $2,496 |
| 5350-0084 | David Clark model 3800 intercom system with (6) cab head sets. Headsets to be shipped loose. | $8,253 |
| 5350-0085 | Safety Vision officer's side camera SV-622RS w/ SV-512 cable. Requires Safety Vision back-up camera option. Camera to be located up high on officer side of the cab centrally located (above canopy window if applicable) interlocked with right turn signal. Camera only - does not include monitor. | $965 |
| 5350-0086 | Safety Vision driver's side camera SV-622LS w/ SV-512 cable. Requires Safety Vision back-up camera option. Camera to be located up high on driver side of the cab centrally located (above canopy window if applicable) interlocked with left turn signal. Camera only - does not include monitor. | $965 |
| 5350-0110 | Camera backup Zone Defense LCD model SYS-323-1-4Q with split screen capable monitor. | $2,055 |
| 5350-0111 | Camera backup Zone Defense LCD model SYS-323-1-4 with monitor and console. | $1,384 |
| 5350-0112 | Sigtronics US-67S intercom system with (6) cab jacks six headsets / hooks PTT switches for driver / officer. Does not include radio interface cable. Custom cabs only. Headsets to be shipped loose. | $5,800 |
| 5350-0114 | Sigtronics US-67D intercom system with (6) cab jacks six headsets / hooks PTT switches for driver / officer. Does not include radio interface cable. Custom cabs only. Headsets to be shipped loose. | $5,914 |
| 5350-0116 | Federal Signal back-up/DVR camera system. Includes front view rear view camera side view cameras split screen monitor and DVR. | $4,091 |
| 5350-0118 | Camera backup Federal Signal LCD model CAMSET70-NTSC-4 with monitor. | $1,246 |
| 5350-0123 | Sigtronics US-12S intercom system with (7) cab jacks (1) pump panel jack seven headsets / hooks PTT switches for driver / officer / ppnl. Does not include radio interface cable. Custom cabs only. Headsets to be shipped loose. | $6,654 |
| 5350-0130 | David Clark model 3800 intercom system with (6) cab head sets and (1) pump panel jack. Custom cabs only. Headsets to be shipped loose. | $10,347 |
| 5350-0132 | David Clark model 3800 intercom system with four (4) cab head sets and one (1) pump panel jack. Radio interfaced to three (3) positions driver turret operator and pump panel. Headsets to be shipped loose. | $10,716 |
| 5350-0134 | Voyager back-up camera wire through multiplex display. Video displays automatically when transmission is in reverse. | $725 |
| 5350-0136 | Sigtronics US-67D intercom system with (5) cab jacks (1) pump panel jack (1) driver rear body jack five headsets / hooks PTT switches for driver / officer / ppnl / rear body. Does not include radio interface cable. Custom cabs only. Headsets to be shipped loose. | $5,507 |
| 5350-0137 | Sigtronics US-45S intercom system with (4) cab jacks four headsets / hooks PTT switches for driver / officer. Does not include radio interface cable. Custom cabs only. Headsets to be shipped loose. | $4,328 |
| 5350-0140 | Safety Vision officer's side camera SV-622RS w/ SV-512 cable. Requires Safety Vision back-up camera option. Camera to be located on officer's side gravel shield offset to the rear. | $932 |
| 5350-0141 | Safety Vision driver's side camera SV-622LS w/ SV-512 cable. Requires Safety Vision back-up camera option. Camera to be located on driver's side gravel shield offset to the rear. | $932 |
| 5350-0142 | Safety Vision officer's side camera. Requires Safety Vision back-up camera option. SV-620 Kit w/ SV-523. Camera to be located on officer's side of cab above tank level lights. | $932 |
| 5350-0156 | FRC ACT 2-way aerial intercom. | $2,111 |
| 5350-0157 | FRC ACT 3-way aerial intercom. Speaker and control module to be located to rear of platform on Bronto units. | $3,216 |
| 5350-0158 | Camera back-up Safety Vision LCD model SV-CLCD70B-625B with audio. Located in cab dash on bracket (see photos). | $2,129 |

| Item No. | Description | |
|---|---|---|
| 5350-0169 | Camera back-up Safety Vision LCD model SV-CLCD-64-810 with lens shutter that opens when the unit is put in reverse. | $2,202 |
| 5350-0173 | Safety Vision driver's side camera SV-622LS w/ SV-512 cable. Requires Safety Vision back-up camera option. Camera to be located on driver's side above forward tandem of rear axle. | $932 |
| 5350-0174 | Safety Vision officer's side camera SV-622RS w/ SV-512 cable. Requires Safety Vision back-up camera option. Camera to be located on officer's side above forward tandem of rear axle. | $932 |
| 5350-0175 | David Clark model 3800 intercom system with (4) cab head sets. Headsets to be shipped loose. | $6,343 |
| 5350-0176 | David Clark model 3800 intercom system with (5) cab head sets and (1) pump panel jack. Custom cabs only. Headsets to be shipped loose. | $9,442 |
| | | $0 |
| 5350-0177 | FireCom (4) position wireless 5yr extended warranty. Includes 5-day repair time with 2-day shipping. | $1,840 |
| 5350-0180 | Safety Vision officer's side camera SV-622RS w/ SV-512 cable. Requires Safety Vision back-up camera option. Camera to be located up high on officer side of the cab centrally located (above canopy window if applicable) interlocked with left turn signal. Camera only - does not include monitor. | $965 |
| 5350-0181 | Camera back-up Safety Vision LCD model SV-CLCD70BA-620A with audio. For use with up to 2 cameras. Includes monitor for console mounting. | $2,286 |
| 5350-0182 | Safety Vision officer's side camera SV-622RS w/ SV-512 cable. Requires Safety Vision back-up camera option. Camera to be located on front cab corner (approx 31" bottom of camera to bottom of cab) interlocked with right turn signal. Camera only - does not include monitor. | $965 |
| 5350-0183 | Safety Vision driver's side camera SV-622LS w/ SV-512 cable. Requires Safety Vision back-up camera option. Camera to be located on front cab corner (approx 31" bottom of camera to bottom of cab) interlocked with left turn signal. Camera only - does not include monitor. | $965 |
| 5350-0186 | Back-up camera speaker. For use with V-MUX electrical system. Located in cab accessible to driver. | $221 |
| 5350-0188 | Federal Signal (Sony) back-up camera wire through multiplex display. Video displays automatically when transmission is in reverse. | $701 |
| 5350-0189 | Zone Defense PathFindIR FLIR camera. Located centered below windshield. For use with Safety Zone Defense split screen back-up camera system only. Includes guarded switch on driver side lower dash area. | $6,401 |
| 5350-0190 | Zone Defense side camera. Requires Zone Defense back-up camera option. Camera to be located on driver's and officer's side mirror. | $492 |
| 5350-0191 | Video Sentinel camera system. Includes FLIR and color zoom camera at platform (with pan and tilt) and 8.4" color weatherproof monitor. The monitor shall be located in/and or on: [#LOC]. | $57,433 |
| 5350-0192 | Safety Vision back-up camera wired through multiplex display. Video displays automatically when transmission is in reverse. Camera only - does not include monitor. | $932 |
| 5350-0193 | Voyager rear facing camera positioned on officer's side front cab corner (approx 31" bottom of camera to bottom of cab) interlocked with right turn signal. Camera only - does not include monitor. | $706 |
| 5350-0194 | Voyager rear facing camera positioned on driver's side front cab corner (approx 31" bottom of camera to bottom of cab) interlocked with left turn signal. Camera only - does not include monitor. | $706 |
| 5350-0196 | Sigtronics US-67D intercom system with (5) cab jacks (1) pump panel jack five headsets / hooks PTT switches for driver / officer / ppnl. Does not include radio interface cable. Custom cabs only. Headsets to be shipped loose. | $5,184 |
| 5350-0197 | Safety Vision officer's side camera SV-622RS w/ SV-512 cable. Requires Safety Vision back-up camera option. Camera to be located on front fender interlocked with right turn signal. Camera only - does not include monitor. | $965 |
| 5350-0198 | Voyager rear facing camera positioned on officer's side front fender interlocked with right turn signal. Camera only - does not include monitor. | $706 |
| 5350-0199 | FireCom intercom kit to include a digital intercom model 5100D four (4) plug in modules and headset hooks shall be installed within the cab. Headsets are not included and ordered separately (misc loose equip). | $2,729 |
| 5350-0200 | FireCom intercom kit to include a digital intercom model 5100D four (4) plug in modules and headset hooks shall be installed within the cab and one (1) exterior pump panel plug in module. Headsets are not included and ordered separately (misc loose equip). | $2,964 |
| 5350-0201 | FireCom intercom kit to include a digital intercom model 5100D six (6) plug in modules and headset hooks shall be installed within the cab. Headsets are not included and ordered separately (misc loose equip). | $3,092 |

| Item No. | Description | |
|---|---|---|
| 5350-0202 | FireCom intercom kit to include a digital intercom model 5100D six (6) plug in modules and headset hooks shall be installed within the cab and one (1) exterior pump panel plug in module. Headsets are not included and ordered separately (misc loose equip). | $3,368 |
| 5350-0203 | FireCom intercom kit to include a digital intercom model 5100D five (5) plug in modules and headset hooks shall be installed within the cab. Headsets are not included and ordered separately (misc loose equip). | $2,931 |
| 5350-0204 | FireCom intercom kit to include a digital intercom model 5100D five (5) plug in modules and headset hooks shall be installed within the cab and one (1) exterior pump panel plug in module. Headsets are not included and ordered separately (misc loose equip). | $3,166 |
| 5350-0208 | FireCom intercom kit to include a dual radio digital intercom model 5200D four (4) plug in modules and headset hooks shall be installed within the cab. Headsets are not included and ordered separately (misc loose equip). | $3,201 |
| 5350-0209 | FireCom intercom kit to include a dual radio digital intercom model 5200D four (4) plug in modules and headset hooks shall be installed within the cab and one (1) exterior pump panel plug in module. Headsets are not included and ordered separately (misc loose equip). | $3,436 |
| 5350-0213 | FireCom intercom kit to include a dual radio digital intercom model 5200D five (5) plug in modules and headset hooks shall be installed within the cab and one (1) exterior pump panel plug in module. Headsets are not included and ordered separately (misc loose equip). | $3,638 |
| 5350-0219 | Safety Vision officer's side camera SV-622RS w/ SV-512 cable. Requires Safety Vision back-up camera option. Camera to be located on the officer side cab up high behind front door below the scene light interlocked with right turn signal. Camera only - does not include monitor. | $965 |
| 5350-0221 | Setcom intercom kit to include a intercom model IM-900 and four (4) plug in modules shall be installed within the cab. Headsets are not included and ordered separately (misc loose equip). | $1,333 |
| 5350-0222 | Setcom dual radio intercom kit to include a intercom model IM-900 and four (4) plug in modules shall be installed within the cab. Headsets are not included and ordered separately (misc loose equip). | $1,808 |
| 5350-0223 | Setcom intercom kit to include a intercom model IM-900 four (4) plug in modules shall be installed within the cab and (1) pump panel plug in module. Headsets are not included and ordered separately (misc loose equip). | $1,695 |
| 5350-0224 | Setcom dual radio intercom kit to include a intercom model IM-900 four (4) plug in modules shall be installed within the cab and (1) pump panel plug in module. Headsets are not included and ordered separately (misc loose equip). | $2,170 |
| 5350-0225 | Setcom intercom kit to include a intercom model IM-900 and five (5) plug in modules shall be installed within the cab. Headsets are not included and ordered separately (misc loose equip). | $1,651 |
| 5350-0226 | Setcom dual radio intercom kit to include a intercom model IM-900 and five (5) plug in modules shall be installed within the cab. Headsets are not included and ordered separately (misc loose equip). | $2,124 |
| 5350-0227 | Setcom intercom kit to include a intercom model IM-900 five (5) plug in modules shall be installed within the cab and (1) pump panel plug in module. Headsets are not included and ordered separately (misc loose equip). | $2,013 |
| 5350-0228 | Setcom dual radio intercom kit to include a intercom model IM-900 five (5) plug in modules shall be installed within the cab and (1) pump panel plug in module. Headsets are not included and ordered separately (misc loose equip). | $2,485 |
| 5350-0229 | Setcom intercom kit to include a intercom model IM-900 and six (6) plug in modules shall be installed within the cab. Headsets are not included and ordered separately (misc loose equip). | $1,651 |
| 5350-0230 | Setcom dual radio intercom kit to include a intercom model IM-900 and six (6) plug in modules shall be installed within the cab. Headsets are not included and ordered separately (misc loose equip). | $2,124 |
| 5350-0231 | Setcom intercom kit to include a intercom model IM-900 six (6) plug in modules shall be installed within the cab and (1) pump panel plug in module. Headsets are not included and ordered separately (misc loose equip). | $2,013 |
| 5350-0232 | Setcom dual radio intercom kit to include a intercom model IM-900 six (6) plug in modules shall be installed within the cab and (1) pump panel plug in module. Headsets are not included and ordered separately (misc loose equip). | $2,485 |

| Item No. | Description | |
|---|---|---|
| 5350-0233 | Setcom wireless intercom kit to include a intercom model IM-900 and four (4) wireless adapters shall be installed within the cab. Headsets are not included and ordered separately (misc loose equip). | $1,937 |
| 5350-0234 | Setcom wireless dual radio intercom kit to include a intercom model IM-900 and four (4) wireless adapters shall be installed within the cab. Headsets are not included and ordered separately (misc loose equip). | $2,411 |
| 5350-0235 | Setcom wireless intercom kit to include a intercom model IM-900 and five (5) wireless adapters shall be installed within the cab. Headsets are not included and ordered separately (misc loose equip). | $2,380 |
| 5350-0236 | Setcom wireless dual radio intercom kit to include a intercom model IM-900 and five (5) wireless adapters shall be installed within the cab. Headsets are not included and ordered separately (misc loose equip). | $2,854 |
| 5350-0237 | Setcom wireless intercom kit to include a intercom model IM-900 and six (6) wireless adapters shall be installed within the cab. Headsets are not included and ordered separately (misc loose equip). | $2,508 |
| 5350-0238 | Setcom wireless dual radio intercom kit to include a intercom model IM-900 and six (6) wireless adapters shall be installed within the cab. Headsets are not included and ordered separately (misc loose equip). | $2,983 |
| 5350-0239 | David Clark model 3800 intercom system with (4) cab head sets and (1) pump panel jack. Custom cabs only. Headsets to be shipped loose. | $8,534 |
| 5350-0240 | Intercom aerial 3-way. Atkinson Dynamics (Federal). The intercom system shall be installed to provide communications between the turntable control station the driver side front compartment face (pump panel area) and the aerial tip. | $3,219 |
| 5350-0241 | Zone Defense side camera. Requires Zone Defense back-up camera option. Camera to be located on officer's side mirror. | $265 |
| 5350-0242 | FireCom (8) position (1) which is wireless. Intercom kit to include a digital quad radio monitor intercom model 5400D one (1) base transmit unit with radio transmission (for wireless) seven (7) plug in modules and eight (8) headset hooks shall be installed within the cab. Headsets are not included and ordered separately (misc loose equip). | $5,829 |
| 5350-0243 | FireCom intercom kit to include a digital intercom model 5100D eight (8) plug in modules and headset hooks shall be installed within the cab. Headsets are not included and ordered separately (misc loose equip). | $3,536 |
| 5350-0244 | FRC ACT 3-way aerial intercom to provide communications between the turntable control station the aerial tip and [#LOC]. | $3,216 |
| 5350-0246 | Voyager rear facing camera positioned on officer's side front cab mirror (approx 31" bottom of camera to bottom of cab) interlocked with right turn signal. Camera only - does not include monitor. | $706 |
| 5350-0247 | Remote 5100D head for Firecom intercom. Location: [#LOC]. | $606 |
| 5350-0248 | Remote 5200D head for Firecom intercom. Location: [#LOC]. | $686 |
| 5350-0249 | Sigtronics US-45S Ultrasound Intercom System with (4) cab jacks (4) headsets (2) SE-8RPTT headsets dual speaker flex boom mic with radio push to talk switch (2) SE-8 headsets dual speaker flex boom mic. Includes HLN6961 radio interface cable. Custom cabs only. Headsets to be shipped loose. | $5,522 |
| 5350-0251 | Camera system Brigade 360. Includes 4 cameras located front rear left and right. Requires seperate multiplex color display as the monitor. Note: cameras must be located as high as possible with side cameras centrally located. (Requires approval for stainless steel prodcut.) | $7,485 |
| 5350-0252 | Brigade Digital Video Recorder model MDR-304 for use with Brigade camera system. | $2,295 |
| 5350-0253 | Voyager officer camera positioned on the officer's side of the speedlay module up high near the E-ONE Logo looking downward. Camera only - does not include monitor | $706 |
| 5350-0254 | Zone Defense back-up camera wired through multiplex display. Video displays automatically when transmission is in reverse. Camera only - does not include monitor. | $492 |
| 5350-0255 | Foot switch driver side Setcom. Trico foot switch to key the microphone includes 16' cable. | $364 |
| 5350-0257 | Federal Signal (Sony) driver's side camera. Camera to be located up high on driver side of the cab centrally located (above canopy window if applicable) interlocked with left turn signal. Camera only - does not include monitor. | $701 |
| 5350-0258 | Federal Signal (Sony) officer's side camera. Camera to be located up high on officer side of the cab centrally located (above canopy window if applicable) interlocked with left turn signal. Camera only - does not include monitor. | $701 |
| 5350-0261 | David Clark model 3800 intercom system with (8) head sets and (1) pump panel jack. Custom cabs only. Headsets to be shipped loose. | $12,122 |

| Item No. | Description | |
|---|---|---|
| 5350-0262 | David Clark model 3800 intercom system with (8) cab head sets. Headsets to be shipped loose. | $10,165 |
| 5350-0263 | Sigtronics US-12S intercom system with (8) cab jacks (1) pump panel jack eight headsets / hooks PTT switches for driver / officer / ppnl. Does not include radio interface cable. Custom cabs only. Headsets to be shipped loose. | $7,389 |
| 5350-0265 | FireCom intercom kit to include a digital intercom model 5100D six (6) plug in modules and headset hooks shall be installed within the cab and one (1) exterior plug in module in L1 adjacent to breaker box (if equipped). Headsets are not included and ordered separately (misc loose equip). | $3,368 |
| 5350-0269 | Camera system Voyager model AOM713WP 7" waterproof monitor with VCMS10B camera located on officer side pump module up high. Monitor located on pump operator panel. | $1,274 |
| 5350-0270 | Federal Signal (Sony) driver's side camera. Camera to be located on front cab corner (approx 31" bottom of camera to bottom of cab) interlocked with left turn signal. Camera only - does not include monitor. | $701 |
| 5350-0271 | Federal Signal (Sony) officer's side camera. Camera to be located on front cab corner (approx 31" bottom of camera to bottom of cab) interlocked with right turn signal. Camera only - does not include monitor. | $701 |
| 5350-0275 | Zone Defense PathFindIR FLIR camera. Located centered below windshield. No monitor included; camera only. Video wired through multiplex display in cab. | $6,401 |
| 5350-0276 | Back-up camera speaker. For use with V-MUX electrical system. Located on driver side overhead console. | $221 |
| 5350-0279 | FireCom intercom kit to include a digital intercom model 5100D six (6) plug in modules and headset hooks shall be installed within the cab and one (1) exterior plug in module at the driver side rear of body. Headsets are not included and ordered separately (misc loose equip). | $3,368 |
| 5350-0283 | Zone Defense side camera. Requires Zone Defense back-up camera option. Camera to be located on officer's side of cab ahead of cab door driprail approx. 31" above bottom of cab. | $492 |
| 5350-0284 | Zone Defense side camera. Requires Zone Defense back-up camera option. Camera to be located on driver's side of cab ahead of cab door driprail approx. 31" above bottom of cab. | $492 |
| 5350-0285 | FireCom (6) position (2) which are wireless. Intercom kit to include a digital intercom model 5100D two (2) base transmit unit with radio transmission (for wireless) (4) plug in modules and (6) headset hooks shall be installed within the cab. Headsets are not included and ordered separately (misc loose equip). | $3,893 |
| 5350-0287 | Brushed stainless steel camera shield. | $252 |
| 5350-0291 | Sigtronics US-67S intercom system with (6) cab jacks (1) pump panel jack six headsets / hooks PTT switches for driver / officer / ppnl. Does not include radio interface cable. Custom cabs only. Headsets to be shipped loose. | $5,920 |
| 5350-0292 | Sigtronics US-45D intercom system with (3) cab jacks (1) pump panel jack (1) turntable jack three headsets / hooks PTT switches for driver/officer/ppnl/turntable. Does not include radio interface cable. Custom cabs only. Headsets to be shipped loose. | $4,367 |
| 5350-0293 | FireCom intercom kit to include a digital intercom model 5100D five (5) plug in modules and headset hooks shall be installed within the cab and one (1) exterior plug in module at the driver side rear of body. Headsets are not included and ordered separately (misc loose equip). | $3,166 |
| 5350-0294 | Back-up camera speaker. For use with V-MUX electrical system. Located in cab on side wall near driver seat. | $221 |
| 5350-0295 | Remote 5400D head for Firecom intercom. Location: [#LOC]. | $858 |
| 5350-0299 | Safety Vision CF DVR with SV-620A camera on front of cab above grille. No monitor. Camera to record when truck is in operation both drriving and sitting idle. | $2,851 |
| 5350-0300 | David Clark model 3800 dual radio intercom system with (6) cab head sets. Headsets to be shipped loose. | $8,397 |
| 5350-0301 | Pro-Vision VLI wireless camera at tip of aerial connected to AACS color display. | $2,018 |
| 5350-0303 | FireCom intercom kit to include a digital intercom model 5100D one (1) plug in module and headset hook shall be installed within the cab and one (1) exterior pump panel plug in module. Headset is not included and ordered separately (misc loose equip). | $2,336 |
| 5350-0306 | David Clark model 3800 wireless intercom system with (4) cab head sets. Headsets and battery packs to be shipped loose. | $11,619 |
| 5350-0307 | FRC ACT 2-way aerial intercom. Platform mounted intercom located ahead of controls. Bronto only. | $2,549 |
| 5350-0308 | Safety Vision forward camera. Requires Safety Vision back-up camera option. SV-620 Kit w/ SV-523. Camera to be located on front of cab centered below windshield. | $932 |
| 5350-0311 | Rosco dual vision camera system model DV231. Interior mounted at the front windshield. | $1,759 |

| Item No. | Description | |
|---|---|---|
| 5350-0312 | Setcom aerial advantage antenna kit for wireless headsets (EA). Location(s) to be determined by available space on cab roof. | $282 |
| 5350-0314 | Camera at tip of aerial. Pro-Vision VLI wireless with 5" waterproof monitor at turntable console. | $2,404 |
| 5350-0317 | Sigtronics US-67D intercom system with (5) cab jacks five headsets / hooks PTT switches for driver / officer. Does not include radio interface cable. Custom cabs only. Headsets to be shipped loose. | $5,081 |
| 5350-0318 | David Clark model 3800 dual intercom system with (6) cab head sets and (1) pump panel jack. Custom cabs only. Headsets to be shipped loose. | $10,347 |
| 5350-0319 | FireCom wireless intercom kit to include a digital intercom model 5100D one (1) base transmit unit with up to (5) radio/intercom only transmission and up to (5) headset hooks shall be installed within the cab. Headsets are not included and ordered separately (misc loose equip). | $3,785 |
| 5350-0320 | FireCom wireless intercom kit to include a digital dual intercom model 5200D one (1) base transmit unit with up to (5) radio/intercom only transmission and up to (5) headset hooks shall be installed within the cab. Headsets are not included and ordered separately (misc loose equip). | $4,236 |
| 5350-0321 | FireCom wireless intercom kit to include a digital intercom model 5100D one (1) base transmit unit with up to (10) radio/intercom only transmission and up to (10) headset hooks shall be installed within the cab. Headsets are not included and ordered separately (misc loose equip). | $5,637 |
| 5350-0322 | FireCom wireless intercom kit to include a digital dual intercom model 5200D one (1) base transmit unit with up to (10) radio/intercom only transmission and up to (10) headset hooks shall be installed within the cab. Headsets are not included and ordered separately (misc loose equip). | $6,086 |
| 5350-0323 | Camera system Voyager model AOM713WP 7" waterproof monitor with VCMS10B camera located on officer side body above R1. Monitor located on pump operator panel. | $1,274 |
| 5350-0324 | Safety Vision officer's side camera SV-622RS w/ SV-512 cable. Requires Safety Vision back-up camera option. Camera to be located on the officer side cab above fenderette interlocked with right turn signal. Camera only - does not include monitor. | $965 |
| 5350-0325 | David Clark intercom jacks; (1) pump panel (1)turntable. Wire to center cab dash. (N/A with three-way aerial intercom). | $3,218 |
| 5350-0326 | David Clark model 3800 intercom system with (4) cab head sets. Driver and officer will be wireless; all others are wired. Headsets to be shipped loose. | $8,050 |
| 5380-0004 | Compartment light incandescent additional (EA). Locate opposite of standard (if applicable) in compartment [#LOC] | $78 |
| 5380-0005 | Compartment light Truck-Lite LED additional (EA). Locate opposite of standard in compartment [#LOC]. | $202 |
| 5380-0006 | Compartment light incandescent additional (EA). Door(s) mounted. Compartment [#LOC]. | $121 |
| 5380-0007 | Compartment light Truck-Lite LED additional (EA). Door(s) mounted. Compartment [#LOC]. | $276 |
| 5380-0009 | Compartment light package incandescent for medium bodies. | $775 |
| 5380-0010 | Compartment light package incandescent for large bodies. | $1,204 |
| 5380-0012 | Compartment light package Truck-Lite LED for medium bodies. | $3,090 |
| 5380-0013 | Compartment light package Truck-Lite LED for large bodies. | $4,804 |
| 5380-0020 | Compartment light ROM 14-48" long additional (EA). Locate [#LOC]. (OBSOLETE FROM VENDOR) | $319 |
| 5380-0021 | Compartment light ROM 49-84" long additional (EA). Locate [#LOC]. (OBSOLETE FROM VENDOR) | $472 |
| 5380-0022 | Compartment light POK LED additional (EA). Locate [#LOC]. | $344 |
| 5380-0023 | Compartment light POK LED additional (EA). Locate [#LOC]. | $588 |
| 5380-0027 | Ground light package for cab and body - small. | $482 |
| 5380-0029 | Ground light package for cab and body - large. | $723 |
| 5380-0030 | Ground light package LED - small. | $1,573 |
| 5380-0032 | Ground light package LED - large. | $2,355 |
| 5380-0033 | Step light package body - small. | $450 |
| 5380-0035 | Step light package body - large. | $674 |
| 5380-0036 | Step light package body LED - small. | $1,540 |
| 5380-0038 | Step light package body LED - large. | $2,307 |
| 5380-0042 | Light recessed step Truck-Lite incandescent (additional). Locate [#LOC]. | $124 |
| 5380-0044 | Step light 2" recessed. (4) step lights installed at the rear turntable access walkway. Bronto only. | $156 |
| 5380-0045 | Light recessed step Truck-Lite LED (additional). Locate [#LOC]. | $189 |
| 5380-0055 | Cab and body ground lights to be wired through chassis reverse. | $81 |

| Item No. | Description | |
|---|---|---|
| 5380-0056 | Compartment lights to be wired to automatically activate when park brake is set (IPO cab mtd compartment light switch). | $81 |
| 5380-0060 | Additional LED ground light (EA). Location: Below [#LOC]. | $213 |
| 5380-0062 | Compartment light Federal Signal LED additional (EA). Locate opposite of standard in compartment [#LOC]. | $142 |
| 5380-0065 | Compartment light package Federal Signal LED for medium bodies. | $2,512 |
| 5380-0066 | Compartment light package Federal Signal LED for large bodies. | $3,904 |
| 5380-0067 | Ground light package Federal Signal LED - small. | $1,573 |
| 5380-0068 | Ground light package Federal Signal LED - large. | $2,356 |
| 5380-0069 | Step light package body Federal Signal LED - small. | $1,182 |
| 5380-0070 | Step light package body Federal Signal LED - large. | $1,776 |
| 5380-0071 | Light Federal Signal recessed step LED (additional). Locate [#LOC]. | $152 |
| 5380-0072 | Additional Federal Signal LED ground light (EA). Location: Below [#LOC] | $200 |
| 5380-0074 | Compartment light package Whelen PSC0CDCR LED for large bodies. Light to be stacked vertically on forward side of compartment unless implacable. | $5,923 |
| 5380-0075 | Compartment light incandescent additional (EA). Locate on ceiling of [#LOC]. | $78 |
| 5380-0076 | Compartment light deluxe package Whelen PSC0CDCR LED for medium bodies. Light to be stacked vertically on both sides of compartment. | $8,076 |
| 5380-0077 | Compartment light package Amdor Luma-Bar LED for medium bodies. Includes one light per compartment (two if transverse). | $2,534 |
| 5380-0078 | Compartment light Amdor Luma-Bar LED 26-42" long additional (EA). Locate [#LOC]. | $246 |
| 5380-0079 | Compartment light Amdor Luma-Bar LED 48-74" long additional (EA). Locate [#LOC]. | $374 |
| 5380-0081 | Compartment light package Whelen LED for medium bodies. | $4,810 |
| 5380-0082 | Ground light package Whelen LED - large. | $3,183 |
| 5380-0083 | Step light package Whelen LED - large. | $3,183 |
| 5380-0084 | Ground light package for cab and body - large body. There will be 2 lights under each Compartment opening. | $1,440 |
| 5380-0086 | Ground light package Amdor Luma Bar / Trucklite LED - large. Lights below cab doors to be Luma Bar lights below bumper and body to be Trucklite. | $2,421 |
| 5380-0087 | Compartment light package Weldon LED for medium bodies. | $2,066 |
| 5380-0090 | Compartment light LED (EA). Location: [#LOC]. | $202 |
| 5380-0091 | Whelen PSC0CDCR LED strip light. Locate opposite standard in [#LOC]. | $155 |
| 5380-0096 | Two (2) Whelen PSC0CDCR LED strip light. Locate two (2) opposite side of standard in [#LOC] one (1) 20" down from top of opening and one (1) 10" up from bottom. | $309 |
| 5380-0097 | Whelen PSC0CDCR LED strip light. Locate one (1) light 15" down from top of opening on opposite side of standard in [#LOC]. | $155 |
| 5380-0098 | Compartment light package Whelen PSC0CDCR LED for medium bodies. Light to be stacked vertically on one side of compartment. | $4,040 |
| 5380-0099 | Ladder tunnel light LED (EA). | $189 |
| 5380-0111 | Compartment light Amdor LED for medical cabinet (EA). | $246 |
| 5380-0116 | Ground light package Amdor Luma-Bar H2O LED - large. | $1,825 |
| 5380-0136 | Compartment light package Amdor Luma-Bar LED for large bodies. Includes one light per compartment (two if transverse). | $4,015 |
| 5380-0144 | Compartment light package Amdor Luma-Bar LED for medium bodies. Includes two lights per compartment (four if transverse). | $5,068 |
| 5380-0145 | Compartment light package Amdor Luma-Bar LED for large bodies. Includes two lights per compartment (four if transverse). | $8,028 |
| 5380-0146 | Compartment light Amdor LED additional (EA) ceiling mounted as close to door opening as practical. Location: [#LOC]. | $246 |
| 5380-0148 | Compartment light package ROM V3 LED for large bodies. Includes one light per compartment (two if transverse). | $4,814 |
| 5380-0151 | Step light 2" LED recessed. (4) step lights installed at the rear turntable access walkway. Bronto only. | $277 |
| 5380-0166 | Compartment light Trucklite LED additional (EA). Locate in [#LOC]. | $202 |
| 5380-0202 | Step light package body EON LED - large. | $1,122 |
| 5380-0203 | Step light package body EON LED - small. | $761 |
| 5380-0209 | Compartment light Amdor LED for medical cabinet (PR). | $491 |
| 5380-0214 | Compartment light Truck-Lite LED additional (EA). Locate on ceiling of [#LOC]. | $202 |
| 5380-0217 | Compartment light Whelen Fluorent Plus for medical cabinet (PR). | $692 |
| 5380-0218 | Step light package Whelen LED - small. | $1,762 |

| Item No. | Description | |
|---|---|---|
| 5380-0219 | Compartment light package Whelen Fluorent Plus for large bodies. Includes two lights per compartment (four if transverse). | $10,302 |
| 5380-0220 | Compartment light package Whelen Fluorent Plus for medium bodies. Includes two lights per compartment (four if transverse). | $7,522 |
| 5380-0224 | Whelen PSC0CDCR LED strip light. Mount light [#LOC]. | $155 |
| 5380-0226 | Compartment light Amdor white lumbar. Location: [#LOC]. | $218 |
| 5380-0232 | Step light package Whelen 2" LED - small. | $855 |
| 5380-0235 | Ground light package Amdor Luma Bar H2O LED - small. | $968 |
| 5380-0236 | Additional LumaBar H2O LED ground light (EA). Location: Below [#LOC]. | $168 |
| 5380-0239 | Whelen PELCC ground light package LED - large. | $2,851 |
| 5380-0240 | Compartment light package Amdor Luma-Bar Red LED for medium bodies. Includes one light per compartment (two if transverse). | $2,534 |
| 5380-0245 | Compartment light ROM V4 LED 24-36" long additional (EA). Locate [#LOC]. | $273 |
| 5380-0246 | Compartment light ROM V4 LED 42-72" long additional (EA). Locate [#LOC]. | $456 |
| 5380-0247 | Compartment light ROM V4 LED for medical cabinet (EA). | $335 |
| 5380-0248 | Compartment light ROM V4 LED for medical cabinet (PR). | $668 |
| 5380-0251 | Compartment light package ROM V4 LED for medium bodies. Includes one light per compartment (two if transverse). | $3,027 |
| 5380-0252 | Compartment light package ROM V4 LED for medium bodies. Includes two lights per compartment (four if transverse). | $6,054 |
| 5380-0253 | Compartment light package ROM V4 LED for large bodies. Includes one light per compartment (two if transverse). | $4,814 |
| 5380-0254 | Compartment light package ROM V4 LED for large bodies. Includes two lights per compartment (four if transverse). | $9,624 |
| 5380-0257 | Compartment light package Amdor Luma-Bar blue LED for large bodies. Includes two lights per compartment (four if transverse). | $8,028 |
| 5380-0259 | Compartment light ROM V4 LED additional (EA) ceiling mounted as close to door opening as practical. Location: [#LOC]. | $335 |
| 5380-0266 | Whelen PELCC lights LED (PR). Wired through work light switch. Location: [#LOC]. | $626 |
| 5380-0269 | Light Whelen Super-LED dome model 60CREGCS Red / White. QTY (6). Light Location: Rehab module ceiling configured as close to sales drawing illustration as possible. Switching: White lights shall be wired to a master on/off rocker switch on the REHAB switch panel located in the corner radio cabinet and through the entry door. The red lights shall be wired through the light assembly switch only. | $1,726 |
| 5380-0275 | Step light package 2" LED - small. | $855 |
| 5380-0277 | Compartment light package TecNiq T440 4" LED for medium bodies. | $910 |
| 5380-0278 | Compartment light package TecNiq T440 4" LED for large bodies. | $1,214 |
| 5380-0282 | Compartment light TecNiq T440 4" LED additional (EA). Locate opposite of standard in compartment [#LOC]. " If transverse locate on opposite wall centered between the standard locations 15 inches from compartment edge." | $104 |
| 5380-0284 | EON step light located (2) each side under horizontal hosebed extrusion to illuminate compartment tops. | $468 |
| 5380-0285 | Step light package body TecNiq T440 4" LED - small. | $526 |
| 5380-0286 | Step light package body TecNiq T440 4" LED - large. | $791 |
| 5380-0288 | Compartment light package Amdor Luma-Bar red LED for medium bodies. Includes two lights per compartment (four if transverse). | $5,068 |
| 5380-0289 | Compartment light Amdor red LED for medical cabinet (PR). | $491 |
| 5380-0290 | Compartment light Amdor Luma-Bar red LED 48-74" long additional (EA). Locate [#LOC]. | $374 |
| 5380-0292 | Ground light package Whelen 3" LED - large. | $1,900 |
| 5380-0293 | Step light package Whelen 3" LED - large. | $1,414 |
| 5380-0297 | Compartment light Amdor LED blue for medical cabinet (EA). | $246 |
| 5380-0298 | Compartment light package Hansen 10mm LED for medium bodies. Includes two lights per compartment (four if transverse). | $2,626 |
| 5380-0299 | Ground light package red Amdor Luma-Bar H2O LED - large. | $1,825 |
| 5380-0302 | Additional TecNiq T440 4" LED ground light (EA). Location: Below [#LOC]. | $132 |
| 5380-0303 | Compartment light Hansen 10mm LED for medical cabinet (PR). | $368 |
| 5380-0304 | Compartment light Amdor red/white LED for medical cabinet (EA). | $313 |
| 5380-0305 | Compartment light package Amdor Luma-Bar red/white LED for medium bodies. Includes two lights per compartment (four if transverse) and switch accessible to driver for red or white activation. | $6,954 |

| Item No. | Description | |
|---|---|---|
| 5380-0308 | Compartment light package Hansen LED for medium bodies. Includes one light per compartment (two if transverse). | $1,250 |
| 5380-0309 | Compartment light package Hansen LED for large bodies. Includes one light per compartment (two if transverse). | $2,728 |
| 5380-0311 | Compartment light package Hansen LED for medium bodies. Includes two lights per compartment (four if transverse). | $2,501 |
| 5380-0312 | Compartment light package Hansen LED for large bodies. Includes two lights per compartment (four if transverse). | $5,405 |
| 5380-0313 | Compartment light Hansen 18-37" long additional (EA). Locate [#LOC]. | $181 |
| 5380-0314 | Compartment light Hansen LED 49-65" long additional (EA). Locate [#LOC]. | $191 |
| 5380-0315 | Compartment light Hansen LED for medical cabinet (EA). | $182 |
| 5380-0316 | Compartment light Hansen LED for medical cabinet (PR). | $365 |
| 5380-0317 | Step light additional. Amdor 20" Luma Bar H2O LED. Location: [#LOC]. | $214 |
| 5380-0318 | Whelen model 3SC0CDCR with chrome flange door pan mounted on outboard corners. Location: L2 | $359 |
| 5390-0000 | Deck light - Unity 12 volt (PR). Location: [#LOC]. | $381 |
| 5390-0001 | Hose bed light Unity. Locate at front area of hose bed. Switched with work light switch in cab. | $185 |
| 5390-0002 | Hose bed light Federal Signal GH Scene. Locate at the front area of hose bed. Switched with work light switch in cab. | $240 |
| 5390-0003 | Hose bed light Truck-Lite. Locate at the front area of the hose bed. Switched with work light switch in cab. | $111 |
| 5390-0004 | Crosslay lights Weldon. Locate on each side at rear of crosslay (SM) or forward of crosslay (TM) approx. 16" from side of body. | $340 |
| 5390-0005 | Crosslay light deck Unity. Locate to rear of crosslay (SM) or forward of crosslay (TM). | $180 |
| 5390-0006 | Deck lights Collins FX-12R (PR). Location: [#LOC]. | $1,085 |
| 5390-0007 | Deck/scene light circuit wiring through chassis reverse. Requires rear deck or scene light. | $81 |
| 5390-0008 | Federal Signal GH scene lights (PR). Switch in cab (driver and officer side facing lights switched separately). Locate [#LOC]. | $448 |
| 5390-0018 | Whelen 600 series 26 degree scenelights (PR) with weatherproof connectors. Switch in cab (driver and officer side facing lights switched separately). Locate [#LOC]. | $354 |
| 5390-0019 | Whelen 700 series 8-32 degree scenelights (PR) with weatherproof connectors. Switch in cab (driver and officer side facing lights switched separately). Locate [#LOC]. | $348 |
| 5390-0020 | Whelen 900 series Gradient Opti-Scenelight (PR) with weatherproof connectors. Switched in cab (driver and officer side facing lights switched separately). Locate [#LOC]. | $354 |
| 5390-0022 | Crosslay light Truck-Lite. Locate to rear of crosslay (SM) and forward of crosslay (TM as applicable). Switched with work light switch in cab. | $111 |
| 5390-0023 | Tomar 46H13-C 13 degree scene lights (PR) with weatherproof connectors. Switch in cab (driver and officer side lights switched separately). Locate [#LOC]. | $394 |
| 5390-0024 | Deck Light - Truck-Lite (PR). Location: [#LOC]. | $329 |
| 5390-0025 | Cab scene lights are to be switched with cab doors in addition to standard. | $81 |
| 5390-0026 | Federal Signal GH Scene cornering lights (PR) wired to turn signals reverse and work lights. Location: [#LOC] | $858 |
| 5390-0030 | Deck Lts-Collins FX-6 (PR) Location: [#LOC] | $1,085 |
| 5390-0034 | Whelen 600 series 26 degree scene lights (PR) with weatherproof connectors. To be used as cornering lights wired to turn signals and four way flashers. Interlock through park brake. Location: [#LOC]. | $354 |
| 5390-0036 | Hose bed light circuit wiring through chassis reverse. Requires hose bed light. | $81 |
| 5390-0038 | 4" LED light (black groument) with diamond plate box mount (PR). Locate (1) at front of hosebed and (1) at the crosslay area. Switch with work light switch. | $737 |
| 5390-0039 | Federal Signal GH Scene lights (PR). Switch in cab (driver and officer side facing lights switched together). Locate [#LOC] | $448 |
| 5390-0040 | Weldon 4 x 6 HID scene lights (PR) with weatherproof connectors. Switch in cab (driver and officer side lights switched separately). Locate [#LOC]. | $1,259 |
| 5390-0041 | Whelen 900 series Gradient Opti-Scene lights (PR) with diamond plate mounting box. Switch in cab (driver and officer side facing lights switched separately). Locate [#LOC]. | $534 |
| 5390-0043 | Crosslay light Trucklite. Locate forward of crosslay. Switched with work light switch in cab. | $111 |
| 5390-0047 | Federal Signal GH scene Light. Locate rearward facing for hose bed storage lighting. Mounted in (1) formed box mounted off forward area of body. Box may shift side to side for best lighting application. Light switched with worklight switch. | $408 |
| 5390-0048 | Whelen 600 series gradient Super LED scene lights (PR) with weatherproof connectors. Switch in cab (driver and officer side lights switched separately). Locate [#LOC]. | $1,037 |

| Item No. | Description | |
|---|---|---|
| 5390-0049 | Whelen 600 series 26 degree scene lights (PR) with LH46001 castings. Switch in cab (side facing lights switched separately). Locate [#LOC]. | $453 |
| 5390-0050 | Whelen 500 series LED scene lights (PR) with weatherproof connectors. To be used as cornering lights wired to turn signals and four way flashers. Interlocked with park brake. Location: [#LOC] | $870 |
| 5390-0051 | Whelen 600 series gradient Super LED scene lights (PR) with weatherproof connectors. To be used as cornering lights wired to turn signals and four way flashers. Location: [#LOC]. | $1,037 |
| 5390-0052 | Federal Signal GH Scene lights (PR) with diamond plate mounting box. Switch in cab (driver and officer side facing lights switched separately). Locate [#LOC]. | $813 |
| 5390-0053 | Whelen 700 series 8-32 degree scene lights (PR) with weatherproof connectors. Switch in tillerman cab (driver and officer side lights switched separately) and wired through tillerman cab doors. Locate (1) each side rear of cab doors above windows. | $425 |
| 5390-0054 | Hosebed light Trucklite. Locate (1) each side front of hosebed. Switched with work light switch in cab. | $221 |
| 5390-0056 | Crosslay light Weldon. Locate to rear of crosslay (SM) or forward of crosslay (TM). Switched with work light switch in cab. | $173 |
| 5390-0057 | Hosebed light Weldon. Locate at front area of hosebed. Switched with work light switch in cab. | $173 |
| 5390-0058 | Deck Lights - Truck-Lite LED model 81380 (PR). Location: [#LOC]. | $417 |
| 5390-0059 | Whelen 600 series 26 degree scene lights (PR) with diamond plate mounting box. Switch in cab (side facing lights switched separately). Locate [#LOC]. | $564 |
| 5390-0066 | Whelen 600 series gradient Super LED scene lights (PR) with weatherproof connectors and diamond plate mounting boxes. Switch in cab (driver and officer side lights switched separately). Locate [#LOC]. | $1,136 |
| 5390-0067 | Deck light Trucklite. Switched with work light switch in cab. Loc: [#LOC]. | $194 |
| 5390-0068 | Havis Shield 12V HID scene lights model KR-4035X-D (PR). Location(s): [#LOC]. Includes switch in cab for side facing lights. | $1,641 |
| 5390-0070 | Crosslay light Collins FX-12. Locate to rear of crosslay (SM) and forward of crosslay (TM as applicable). | $545 |
| 5390-0071 | Hosebed light Collins FX-12. Located center front of hosebed. Switched with work light switch in cab | $545 |
| 5390-0073 | Deck Light - Whelen LED model PFBP12C (PR). Location: [#LOC]. | $1,098 |
| 5390-0074 | Hosebed Light Unity. Locate at rear area of hosebed on angle bracket. Switched with work light switch in cab. F118HDT Bronto only. | $237 |
| 5390-0075 | Speedlay light Trucklite. Locate forward area of pump module. Switched with work light switch in cab. | $111 |
| 5390-0076 | Hose bed light Truck-Lite LED model 81380. Locate at front of hose bed. Switched with work light switch in cab. | $210 |
| 5390-0077 | Deck Lt-Collins FX-12R (EA) model KR-SB-312 with lift/push up pole. Due to body mount location a position indicator will not be required. Location(s): [#LOC]. | $915 |
| 5390-0078 | Whelen 600 series 26 degree scene lights (3) with weatherproof connectors. Wire through work light switch in cab. Locate back of cab evenly spaced up high. | $531 |
| 5390-0081 | Deck Light - Grote LED model 63581 (PR) Location: [#LOC]. | $1,727 |
| 5390-0082 | Whelen 600 series 26 degree scene 24VDC lights (PR) with weatherproof connectors. Switch in cab (driver and officer side facing lights switched separately). Locate [#LOC]. | $381 |
| 5390-0087 | Whelen M6 Linear Super LED scene lights (PR). Switched in cab (lights mtd on the sides of apparatus to be switched separately). Locate [#LOC]. | $1,215 |
| 5390-0088 | Crosslay light Whelen PFBP12C LED. Locate to rear of crosslay (SM) and forward of crosslay (TM as applicable). Switched with work light switch in cab. | $550 |
| 5390-0089 | Hose bed light Whelen PFBP12C LED. Locate center front of hose bed. Switched with work light switch in cab. | $550 |
| 5390-0092 | Federal Signal 4" round cornering lights (4) wired to turn signals reverse and work lights. Location: fixed outrigger covers. | $793 |
| 5390-0096 | Hosebed light Trucklite LED. Locate (1) in each outer hosebed upper front wall (if equipped) and (2) upper front wall of center hosebed . Switched with work light switch in cab. | $893 |
| 5390-0102 | Crosslay light Truck-Lite LED model 81380. Locate to rear of crosslay (SM) and forward of crosslay (TM as applicable). Switched with work light switch in cab. | $210 |
| 5390-0103 | Whelen 700 series gradient Super LED scene lights (PR) with weatherproof connectors. Switch in cab (driver and officer side lights switched separately). Locate [#LOC]. | $1,006 |
| 5390-0104 | Light Whelen Pioneer Plus model PFP1 with recess mount. Wired through work light switch in cab. Location(s): [#LOC]. | $1,393 |

| Item No. | Description | |
|---|---|---|
| 5390-0110 | Hosebed light Grote LED model 63581. Locate center front of hosebed. Switched with work light switch in cab. | $865 |
| 5390-0111 | Crosslay light Grote LED model 63581. Locate to rear of crosslay (SM) and forward of crosslay (TM as applicable). Switched with work light switch in cab. | $865 |
| 5390-0117 | Whelen 700 series gradient Super LED scene lights (PR). To be used as cornering lights wired to turn signals reverse and work lights. Location: [#LOC]. | $1,037 |
| 5390-0118 | Grote 63581 LED scene lights (6). Switch in cab (driver and officer side lights switched separately). Lights located (2) each side of body up high (offset forward and rearward) and (2) at rear of body up high. Wetside only. | $4,148 |
| 5390-0119 | Light Whelen Pioneer Plus model PFP1 with ROM KR-SB-600-W4 pedestal side mount. Switched with work light switch in cab. Location(s): [#LOC]. | $2,784 |
| 5390-0124 | Whelen 600 series gradient Super LED scene lights (3) with weatherproof connectors. Wire through work light switch in cab. Locate back of cab evenly spaced up high. | $1,553 |
| 5390-0129 | Hose bed light FRC LED900 with diamond plate mounting box. Locate [#LOC]. Switched with worklight switch in cab. | $942 |
| 5390-0130 | Deck light Whelen PAR-36 model PFBP12C LED (PR). Switched with work light switch in cab. Location: [#LOC]. | $1,098 |
| 5390-0131 | Crosslay light deck Unity. Locate light on the drivers side rearward of the crosslay door mounted on the Hot Shot II pan cover lid. | $180 |
| 5390-0132 | Warning light Federal Signal QL64-BACKUP (PR) white with clear lens. Surface mounted with bezel. Location: [#LOC] | $632 |
| 5390-0133 | Deck lights - Unity 12 volt LED spot (PR). Location: [#LOC]. | $1,040 |
| 5390-0139 | Crosslay light Whelen PFBP12C LED (PR). Locate on each side at rear of crosslay (SM) or forward of crosslay (TM). Location: [#LOC]. Switched with work light switch in cab. | $1,098 |
| 5390-0140 | Whelen 700 series gradient Super LED scene light (EA) with weatherproof connector(s). Switch in cab (driver and officer side lights if applicable switched separately). Locate [#LOC]. | $493 |
| 5390-0141 | Hosebed light Trucklite LED. Locate (1) in driver outer hosebed upper front wall and (2) upper front wall of center hosebed . Switched with work light switch in cab. | $669 |
| 5390-0143 | Crosslay light deck Unity. Locate to driver side rear of crosslay. | $180 |
| 5390-0144 | Unity deck light with model TP-1-I internal pull-up pole. Includes switch on lighthead and driver side overhead console. Location: [#LOC]. | $611 |
| 5390-0146 | Whelen M6 series gradient Super LED scene lights (PR) with weatherproof connectors. To be used as cornering lights wired to turn signals and four way flashers. Location: (1) each side offset rearward of rear most axle. | $1,513 |
| 5390-0151 | Whelen M6 Linear Super LED scene lights (PR) with weatherproof connectors and diamond plate mounting boxes. Location: [#LOC]. Switched with worklight switch in cab. | $1,397 |
| 5390-0152 | Whelen 600 series gradient Super LED surface mounted scene lights (PR) with weatherproof connectors. Switch in cab (driver and officer side lights switched separately). Locate [#LOC]. | $1,037 |
| 5390-0154 | Weldon model 3010-2600-30 scene lights (PR) with diamond plate mounting box. Switch in cab (driver and officer side facing lights switched separately). Locate [#LOC]. | $770 |
| 5390-0155 | Hose bed light Amdor H2O. Locate at the front area of hose bed. SideStacker only. Switched with work light switch in cab. | $354 |
| 5390-0157 | Amdor Lumabar strip light on each side of the hosebed side upper extrusions. Switched with work light switch in cab. | $1,206 |
| 5390-0158 | Hose bed light Truck-Lite LED model 81380. Locate at rear area of hose bed on angle bracket. Switched with work light switch in cab. | $237 |
| 5390-0160 | Whelen M6 series gradient Super LED scene lights (PR) with weatherproof connectors. To be used as cornering lights wired to turn signals and four way flashers. Location: (1) each side front bumper gravelshield offset rearward. | $1,513 |
| 5390-0162 | Hose bed lights (2) Federal Signal GH Scene. Locate in the upper front wall of the hose bed. One (1) each side equally spaced from the outside of the hose bed. Switched with the work light switch in cab. | $478 |
| 5390-0167 | Hosebed light Federal Signal LED. Locate (2) upper front wall of SideStacker hosebed. Switched with work light switch in cab. | $348 |
| 5390-0168 | Hosebed light Trucklite model 44 LED (5). Locate equally spaced on upper front wall of hosebed . Switched with work light switch in cab. | $1,116 |
| 5390-0169 | Deck light FireTech model FT-WL3500-60 LED (PR). Switched with work light switch in cab. Location: [#LOC]. | $788 |
| 5390-0170 | Whelen M6 Linear Super LED scene light (EA). Switched in cab (lights mtd on the sides of apparatus to be switched separately). Locate [#LOC]. | $609 |

| Item No. | Description | |
|---|---|---|
| 5390-0173 | Federal Signal model 64LEDSCENE LED scene light (PR) with weatherproof connectors. Includes switch accessible to driver (driver and officer side lights switched separately). Locate [#LOC]. | $1,059 |
| 5390-0174 | Crosslay lights Whelen Nano 3-LED (PR) with white housings and flood lenses. Locate on each side at rear of crosslay (SM) or forward of crosslay (TM) approx. 16" from side of body. | $666 |
| 5390-0175 | Light Whelen Pioneer Plus model PFP1 with pedestal side mount. Switched with work light switch in cab. Location(s): [#LOC]. | $3,110 |
| 5390-0178 | Light Whelen PFBP6C LED. Locate above L2 on compartment top. Switched through ignition. | $500 |
| 5390-0180 | Crosslay light Truck-Lite LED model 81380. Locate on the forward upper surface of the pump module over the speedlay module to light from above during hose loading operations. Switched with work light switch in cab. | $210 |
| 5390-0181 | Whelen M6 series gradient Super LED scene lights (PR) with weatherproof connectors. To be used as cornering lights wired to turn signals and four way flashers. Location: [#LOC]. | $1,513 |
| 5390-0182 | Crosslay light Amdor H2O. Locate at the front body above crosslay. Switched with work light switch in cab. | $493 |
| 5390-0183 | Crosslay light Truck-Lite LED model 81380. Locate on front of body up high. Switched with work light switch in cab. | $210 |
| 5390-0184 | FireTech 8" 12V double stack mini brow light (PR). Includes switch in cab (driver and officer side facing lights switched separately). Location: [#LOC]. | $2,062 |
| 5390-0185 | Hose bed light Federal Signal 64LEDSCENE. Locate at the front area of hose bed. Switched with work light switch in cab. Includes diamond plate mounting box. | $631 |
| 5390-0188 | Diamond plate mounting boxes (4). For use with scene lights and/or warning lights. Locate on driver and officer side forward and rearward compartment tops outboard; boxes to be full depth of compartment top. | $894 |
| 5390-0189 | Whelen 600 series gradient Super LED surface mounted scene lights (EA). Switch in cab (driver and officer side lights switched separately). Locate [#LOC]. | $518 |
| 5390-0194 | Whelen PELCC crosslay lights LED (PR). Wired through work light switch. Location: (1) each side up high back of cab. | $626 |
| 5390-0196 | FireTech 8" 12V double stack mini brow light (PR) powder coated black. Includes switch in cab (driver and officer side facing lights switched separately). Location: [#LOC]. | $2,062 |
| 5390-0197 | Deck light FireTech model FT-WL3500-60-C driver FT-WL3500-60 officer LED (PR). Driver includes rear camera; requires Vista display. Switched with work light switch in cab. Location: [#LOC]. | $1,515 |
| 5390-0198 | Hose bed light FRC LED model SPA900-Q70. Locate at front of hose bed. Switched with work light switch in cab. | $851 |
| 5390-0199 | Whelen 700 series gradient Super LED scene lights (PR) with LH37101 castings and weatherproof connectors. Switch in cab (driver and officer side lights switched separately). Locate [#LOC]. | $1,095 |
| 5390-0201 | Hosebed light Whelen model 3SC3CDCR 3" LED. Locate even spaced on upper front wall center hosebed. Switched with work light switch in cab. | $524 |
| 5390-0202 | Code3 model 79SC LED scene light (PR) with chrome bezel (as applicable) and weatherproof connectors. Switch in cab (driver and officer side facing lights switched separately). Locate [#LOC]. | $1,187 |
| 5390-0203 | Hosebed light Trucklite LED. Locate even spaced on front wall of hosebed. Switched with work light switch in cab. | $669 |
| 5390-0204 | Whelen M7 Linear Super LED scene lights (PR). Switched in cab (lights mtd on the sides of apparatus to be switched separately). Locate [#LOC]. | $698 |
| 5390-0205 | Code3 model 79SCBZ LED scene light (PR) with weatherproof connectors. Switch in cab (driver and officer side facing lights switched separately). Locate [#LOC]. | $1,187 |
| 5390-0208 | Whelen M6 Linear Super LED scene light in a diamond plate box (EA). Switched in cab (lights mtd on the sides of apparatus to be switched separately). Locate [#LOC]. | $609 |
| 5390-0214 | Federal Signal model 64LEDSCENE LED scene light (PR) with diamond plate mounting box and weatherproof connectors. Includes switch accessible to driver (driver and officer side lights switched separately). Location: [#LOC]. | $1,221 |
| 5390-0215 | Deck Lights - Optronics Model TLL44 (PR). Location: [#LOC]. | $367 |
| 5390-0216 | Hose bed light Optronics LED model TLL44 Locate at front of hose bed. Switched with work light switch in cab. | $210 |
| 5390-0217 | Crosslay light Optronics LED model TLL44. Locate to rear of crosslay (SM) and forward of crosslay (TM as applicable). Switched with work light switch in cab. | $210 |
| 5390-0218 | Hose bed light EON (4) with rubrail extrusion. Locate at front area of hose bed. Switched with work light switch in cab. | $610 |

| Item No. | Description | |
|---|---|---|
| 5390-0220 | Whelen 700 series gradient Super LED scene lights (PR) with weatherproof connectors and diamond plate mounting box. Switch in cab (driver and officer side lights switched separately). Locate [#LOC]. | $1,164 |
| 5390-0221 | Whelen M6 Linear Super LED scene lights (PR) with black bezels. Switched in cab (lights mtd on the sides of apparatus to be switched separately). Locate [#LOC]. | $1,215 |
| 5390-0222 | Deck light FireTech model FT-WL3500-60-W LED (PR). Switched with work light switch in cab. Location: [#LOC]. | $788 |
| 5390-0223 | Hose bed light LED Rigid-Dually D2 model 50151with defussed lens. Locate at front of hose bed. Switched with work light switch in cab. | $638 |
| 5390-0224 | Crosslay light LED Rigid-Dually D2 model 50151with defussed lens. Locate to rear of crosslay (SM) and forward of crosslay (TM as applicable). Switched with work light switch in cab. | $638 |
| 5400-0003 | Engine compartment light (EA). | $131 |
| 5400-0004 | Incandescent pump panel light - additional (EA). Location: [#LOC]. | $98 |
| 5400-0005 | Pump panel LED light package with (2) Whelen strip lights per side pump panel. Not available on panels over 45" wide. Side mount only. | $819 |
| 5400-0006 | Pump panel LED light package with (3) lights per side pump panel. Pump panels over 45" may require additional lights. Side mount only. | $1,176 |
| 5400-0007 | LED pump panel light - additional (EA). Location: [#LOC]. | $202 |
| 5400-0008 | (1) pump panel light over the pump control area to be wired to come on when pump shift is placed in pump. (Side mount forward light noted Top Mount is center light.) | $42 |
| 5400-0010 | Incandescent pump compartment light (EA). | $141 |
| 5400-0011 | LED pump compartment light (EA). | $378 |
| 5400-0020 | Federal NightFighter light with internal pole. Locate [#LOC]. Switched on light head. | $1,310 |
| 5400-0021 | Federal NightFighter Light with External Pole. Locate [#LOC]. Switched on light head. | $2,268 |
| 5400-0030 | Fog Lights Quartz Halogen (PR) [#COL] and located [#LOC]. | $286 |
| 5400-0033 | Cab Dome Lts Red/White 4" incandescent. White light wired through door and light assembly mounted rocker switch. Red light through light assembly mounted rocker switch. | $588 |
| 5400-0035 | Dome Lts White 4" incandescent. Includes assembly mounted rocker switch. Requires one for each cab door. | $159 |
| 5400-0037 | Dome Lts Red/White Incandescent. Package includes two lights mounted in the front and two mounted in the rear of the cab. White light wire through door and light assembly mounted switch. Red light through light assembly mounted switch. | $564 |
| 5400-0038 | Spotlights 6" Unity (PR) cab post mount. | $463 |
| 5400-0039 | Spotlight Specialty 2150 hand held located on officer's side of cab dash - hardwired. | $396 |
| 5400-0041 | Spotlight Federal Visibeam II Remote. If one is selected it will be located centered on cab roof mounted on a bracket. If two are selected they will be located one each side of cab roof to rear of light bar. | $698 |
| 5400-0042 | Map light Sunnex [#LOC]. | $339 |
| 5400-0043 | Maplight-Little Lt 18" Flex [#LOC]. Includes on/off switch. | $228 |
| 5400-0044 | Tillerman tracking lights (PR) - Chrome pedestal mtd Signal Stat #3763 with green lens #9341G. Locate on cab roof to rear of A/C (on top of vista if equipped) approx. 18" apart (each light to be 9" off centerline of cab). Dim filament to use 24 volt bulb ILO 12 volt bulb (reduce the brightness/glare) and be steady burn with headlights. Bright filament to flash with left/right turn signal. | $453 |
| 5400-0045 | Zico cornering light (PR) with polished stainless steel housing model #ZQL-SS-H7614. The lights are to be located each side in the forward area of the tiller axle wheelwell facing forward and be switched from the tiller cab. | $628 |
| 5400-0046 | Pump panel light package with (2) lights per side pump panel. Not available on panels over 45" wide. Side mount only. | $441 |
| 5400-0047 | Pump panel light package with (3) lights per side pump panel. Pump panels over 45" may require additional lights. Side mount only. | $661 |
| 5400-0049 | Pump panel light package - RLP/MM. Includes (2) lights per side pump panel and (2) lights for angled upper control panel. | $486 |
| 5400-0050 | Pump panel light LED package - RLP/MM. Includes (2) lights per side pump panel and (2) lights for angled upper control panel. | $811 |
| 5400-0054 | Spotlight Specialty 2150 hand held located on officer's side of cab dash w/12V receptacle. | $396 |
| 5400-0057 | Dome lts red/white 4" LED (4). Lights to be located two front and two rear. White light wired through door and light assembly mounted rocker switch. Red light through light assembly mounted rocker switch. | $1,523 |
| 5400-0060 | Spotlight Specialty 2150 hand held located on driver's side 3 x 3 post - hardwired. | $396 |

| Item No. | Description | |
|---|---|---|
| 5400-0061 | Golight model 2049 remote control spotlight with black housing. If one is selected it will be located centered on cab roof on a pedestal to rear of light bar. If two are selected they will be located one each side of cab roof to rear of light bar. | $872 |
| 5400-0062 | Code 3 model GLB3200 remote control spotlight with black housing. If one is selected it will be located centered on cab roof on a pedistal to rear of lightbar. If two are selected they will be located one each side of cab roof to rear of lightbar. | $1,245 |
| 5400-0064 | Dome Lts Red/White 4" LED (5). Lights to be located two front and three rear. White light wired through door and light assembly mounted rocker switch. Red light through light assembly mounted rocker switch. | $1,900 |
| 5400-0065 | Map light Littlite 18" flexible LED. Location: [#LOC]. | $262 |
| 5400-0069 | Map light Sunnex HS 761-00 with frosted lens. Location: Officer overhead console inboard of AC vent. | $296 |
| 5400-0071 | Spotlight Collins CL-12-M hand held located on officer's side of cab dash hardwired. Includes Handlelok 1004 bracket. | $477 |
| 5400-0076 | Golight model 2020 permanent spotlight. Location: Centered top of lightbar. | $690 |
| 5400-0080 | FRC Night Master light with external push-up pole. Locate [#LOC]. Switched on light head. | $1,255 |
| 5400-0081 | Golight model 2067 remote control spot light with white housing. If one is selected it will be located centered on cab roof on a pedestal to rear of light bar. If two are selected they will be located one each side of cab roof to rear of light bar. | $872 |
| 5400-0082 | Maplight-Little Lt 18" Flex [#LOC]. Includes dimmer switch. | $228 |
| 5400-0083 | Map light Sunnex HS 761-20 with red lens and dimmer switch. Location: Officer overhead console inboard of AC vent. | $296 |
| 5400-0084 | SpotLt-Fed VisibeamII Remote. If one is select it will be located center on forward vista roof. If two are selected they will be located one each side front corners of vista cab roof. | $698 |
| 5400-0085 | Enclose pump panel LED light package with (3) lights per side pump panel. Side mount only. | $1,568 |
| 5400-0086 | Spotlight Specialty 2150 hand held located on font of map box - hardwired. | $396 |
| 5400-0087 | Map light Sunnex model HS741-27 with red lens. Location: [#LOC]. | $316 |
| 5400-0090 | Spotlight Specialty 2150 hand held located on officer's side 3 x 3 post - hardwired. | $396 |
| 5400-0091 | Zico cornering light (PR) with polished stainless steel housing model #ZQL-SS-H7614 wired through turn signals. Includes cornering light relay. Lights to be directed downward. Location: (1) each side of gravel shield (forward). | $1,037 |
| 5400-0092 | Weldon pump panel LED light package with (3) lights per side pump panel. Pump panels over 45" may require additional lights. Side mount only. | $959 |
| 5400-0097 | Maplight-Havis Shield 12" Flex LED. Location: [#LOC]. | $254 |
| 5400-0098 | Pump panel LED light package with (3) Whelen 4"round lights per side pump panel. Pump panels over 45" may require additional lights. Side mount only. | $1,176 |
| 5400-0104 | Spotlight Specialty 2150 hand held located on officer's side side facing engine cover offset forward below cab dash - hardwired. | $396 |
| 5400-0109 | Weldon LED pump panel light - additional (EA). Location: [#LOC]. | $150 |
| 5400-0110 | Weldon pump panel light LED package - RLP/MM. Includes (2) lights per side pump panel and (2) lights for angled upper control panel. | $709 |
| 5400-0112 | Backing light (PR) Innovative LIghting with polished housing model #580-0200-1 light bulb is a halogen MR16. Location: [#LOC]. | $371 |
| 5400-0125 | SpotLt-Fed VisibeamII Remote. Officer side of cab roof to rear of lightbar mounted on a bracket. | $698 |
| 5400-0129 | Spotlight Collins CL-12-M hand held located on officer's side of cab dash - hardwired. Includes Handlelok 1004 bracket shipped loose. | $477 |
| 5400-0130 | Spotlight Optronics Blue Eye model KB4003 hand held located on officer's side of cab dash - hardwired. | $237 |
| 5400-0131 | Pump panel LED light package Amdor Luma Bar H2O. Includes (1) light per side pump panel (2 driver if split panel). Side mount only. | $960 |
| 5400-0132 | Incandescent pump panel and runningboard lighting package. Includes (3) lights shield mounted on the driver side and (1) 4" recessed light mounted on the officer side compartment face. | $661 |
| 5400-0133 | Golight model 2067 remote control spotlight with white housing. Locate (1) each side cab corner outboard of forward facing lightbar without pedestal. Requires additional side facing warning lights to meet NFPA. | $872 |
| 5400-0137 | Pump panel LED light package for side mount eMAX. Includes (6) TecNiq EON lights with S/S housings located (3) each side above lower side intake/discharge panels. Includes S/S light shields. SM eMAX only. | $392 |

| Item No. | Description | |
|---|---|---|
| 5400-0144 | ROM V3 pump panel light LED package - RLP/MM. Includes (1) light per side pump panel and (1) light for angled upper control panel. | $898 |
| 5400-0148 | Maplight-Little Lt 12" Flex LED. Location: [#LOC]. | $262 |
| 5400-0149 | Pump panel Amdor H2O LED light package with (3) lights per side pump panel. Pump panels over 45" may require additional lights. Side mount only. | $968 |
| 5400-0151 | Pump compartment light EON LED. Wired to work light. | $226 |
| 5400-0154 | Spotlight Specialty 2150 hand held located on center of cab dash with plug-in connector. | $396 |
| 5400-0156 | Spotlight Collins CL-12-M handheld. Light to be hardwired and bracket (Handlelok 1004) to be mounted to the rear of the center console. | $477 |
| 5400-0157 | Spotlight Whelen PAR46 Super LED hand held located on officer's side of cab dash - hardwired. Mounted to not obstruct driver view of passenger corner mounted mirror (if equipped). | $649 |
| 5400-0158 | Spotlights 6" Unity LED (EA) cab post mount. Location: Officer side cab A post. | $540 |
| 5400-0159 | Optronics model QH-100 handheld 12v spotlight. To be hardwired on officer's side of cab dash. | $154 |
| 5400-0164 | Spotlights 6" Unity LED (PR) cab post mount. | $1,077 |
| 5400-0165 | Pump compartment light EON LED. Light shall be switched from the cab dash with the work light switch. | $226 |
| 5400-0166 | Fog lights (PR) Perlux 500 series model 05001-5 clear fog Light located [#LOC]. | $620 |
| 5400-0167 | (1) pump panel light over the pump control area to be wired to come on when pump shift is placed in pump. (Rearward light.) | $42 |
| 5400-0168 | Whelen LED pump compartment light (EA). | $287 |
| 5400-0171 | Compartment light EON LED IPOS. Location of light(s): [#LOC]. | $148 |
| 5400-0173 | Spotlight Whelen PAR46 Super LED hand held located on officer's side of cab dash with plug-in connector. | $649 |
| 5400-0174 | Pump panel light package with (3) On Scene Solutions lights per side pump panel. Pump panels over 45" may require additional lights. Side mount only. | $1,116 |
| 5400-0179 | Zico backing lights (PR) with polished stainless steel housing model #ZQL-SS-LED. Location: [#LOC]. | $1,362 |
| 5400-0180 | Spotlight Collins CL-12-M hand held located on officer's side of cab dash hardwired. Includes Handlelok 1004 bracket which shall be mounted at time of final inspection. | $477 |
| 5400-0182 | (1) pump panel light (center light) over the pump control area to be wired to come on when pump shift is placed in pump. | $42 |
| 5400-0187 | Map light Sunnex HS 761-00 with frosted lens. Location: Driver and officer overhead console inboard. | $296 |
| 5400-0188 | Golight model 30201 remote control HID spot light with white housing. If one is selected it will be located centered on cab roof on a pedestal to rear of light bar. If two are selected they will be located one each side of cab roof to rear of light bar. | $948 |
| 5400-0189 | Golight model 2020 permanent spotlight with white housing. Centered on forward cab roof. | $872 |
| 5400-0190 | Weldon/EON pump panel LED light package with (1) Weldon (2) EON driver pump panel and (3) Weldon officer pump panel. Pump panels over 45" may require additional lights. Side mount only. | $959 |
| 5400-0194 | (1) pump panel light (center light) over each side mount pump control area to be wired to come on when pump shift is placed in pump. | $84 |
| 5400-0196 | TecNiq LED backing lights (PR) model E960. Location: [#LOC]. | $449 |
| 5400-0198 | Map light Sunnex LED model SL9-220. Location: [#LOC]. | $730 |
| 5400-0199 | Pump panel light additional EON LED. Locate (2) driver side up high and (2) officer side up high. | $121 |
| 5400-0200 | Spotlights 6" Unity LED (PR) cab post mount. Includes black housings. | $1,077 |
| 5400-0202 | Spotlight Whelen PAR46 Super LED hand held located on officer's side of cab dash - hardwired. Ship bracket loose. | $649 |
| 5400-0204 | Map light Sunnex HS 761-00 with frosted lens. Location: officer overhead console inboard. | $296 |
| 5400-0205 | Pump panel light additional EON LED. Locate driver side pump panel above additional switches wired through park brake. | $121 |
| 5400-0206 | Golight model 2067 remote control spotlight with white housing. Locate driver side cab roof ahead of vista. Locate controller center of dash offset to driver. | $872 |
| 5400-0207 | Weldon pump panel LED light package with (3) lights on officer side pump panel. Pump panels over 45" may require additional lights. Side mount only. For use with driver enclosed pump panel only. | $480 |
| 5400-0208 | Pump panel Amdor H2O LED light package with (2) lights per side pump panel. Side mount only. | $645 |

| Item No. | Description | |
|---|---|---|
| 5400-0209 | Pump panel Amdor H2O LED red light package with (3) lights per side pump panel. Pump panels over 45" may require additional lights. Side mount only. | $968 |
| 5400-0210 | Fog Lights FireTech FT-WL3500-60 (PR). Location: [#LOC]. | $1,014 |
| 5400-0211 | Whelen 600 series Super LED green. Locate driver side rear of body below upper level warning. Includes switch on pump panel labeled "HYDRANT". | $618 |
| 5400-0212 | Pump compartment light EON LED. Requires seperate switching. | $226 |
| 5400-0213 | Map light Sunnex SL9-200B10L. Location: officer overhead console inboard. | $457 |
| 5400-0216 | Golight model 20214 remote control LED spot light with black housing. Officer side rear of light bar. | $1,315 |
| 5400-0218 | Golight model 20214 remote control LED spot light with black housing. If one is selected it will be located centered on cab roof on a pedestal to rear of lightbar. If two are selected they will be located one each side of cab roof to rear of lightbar. | $1,315 |
| 5400-0219 | EON LED pump panel light - additional (EA). Location: [#LOC]. | $71 |
| 5400-0223 | LED pump panel light - additional amber (EA). Location/function: center above pump operator panel wired through pump shift only. | $150 |
| 5450-0002 | Quartz light Kwik Raze 500W/110V without pole. Location(s): [#LOC] | $639 |
| 5450-0003 | Quartz light KwikRaze 500W/110V model KR-905-I with internal telepole. Location(s): [#LOC] | $706 |
| 5450-0004 | Quartz light KwikRaze 500W/110V model KR-SB-505-W/2-I with external telepole. Location(s): [#LOC] | $1,108 |
| 5450-0005 | Quartz light Kwik Raze 500W/110V portable. Location(s): [#LOC]. | $449 |
| 5450-0006 | Quartz light KwikRaze 500W/110V model KR-SB-805-TM-I with external mount tripod telepole. Requires 110V receptacle. Location(s): [#LOC] | $1,644 |
| 5450-0007 | Quartz light Kwik Raze 500W/110V with recess mount. Location(s): [#LOC]. | $1,023 |
| 5450-0008 | Quartz light Fire Research Focus 750W/110V model FCA510E-S75-SW with internal pull-up pole. Location(s): [#LOC]. | $1,562 |
| 5450-0009 | Quartz light Fire Research Focus 750W/110V model FCA530-S75-SR-SW with side mount push-up pole. Location(s): [#LOC]. | $1,651 |
| 5450-0010 | Quartz light Fire Research Focus 1000W/240V model FCA200-M12 with recess mount. Location(s): [#LOC]. | $877 |
| 5450-0011 | Quartz light Fire Research Optimum 900W/240V model OPA200-R90 with recess mount. Location(s): [#LOC]. | $1,147 |
| 5450-0012 | Quartz light Fire Research Focus 750W/110V model FCA570-S75 without pole. Location(s): [#LOC]. | $1,218 |
| 5450-0015 | Quartz light Fire Research Focus 750W/120V model FCA600-S75-ON-FC603 with 40" telescopic tripod pole. Location(s): [#LOC]. | $1,670 |
| 5450-0016 | Quartz light Fire Research Focus 750W/110V model FCA540-S75-SW with side mount pull up pole. Location(s): [#LOC]. | $1,622 |
| 5450-0017 | Quartz light Fire Research Focus 750W/110V model FCA512-S75-CLP64.5-SW with 64.5" inner pole and 31.5" outer pole. Location(s): [#LOC] | $1,743 |
| 5450-0019 | Quartz light Fire Research Focus 750W/110V model FCA802-S75-01 with brow mount (EA). Location(s): [#LOC]. | $945 |
| 5450-0020 | Quartz light Fire Research Focus 1500W/240V model FCA600-M15-ON-FC603 with telescopic tripod pole. Location(s): [#LOC]. | $1,761 |
| 5450-0021 | Quartz light Fire Research Optimum 750W/110V model OPA570-S75 without pole. Location(s): [#LOC]. | $1,291 |
| 5450-0022 | Quartz light Fire Research Optimum 150W/12V model OPA802-HD15-01 with brow mount (EA). Includes switch accessible to driver. Location(s): [#LOC]. | $1,593 |
| 5450-0023 | Quartz light Fire Research Optimum 150W/12V model OPA510E-HD15-SW with internal pole. Includes switch accessible to driver. Location(s): [#LOC]. | $1,907 |
| 5450-0024 | Quartz light Fire Research Optimum 750W/110V model OPA510E-S75-SW with internal pull up pole. Location(s): [#LOC]. | $1,610 |
| 5450-0027 | Quartz light Fire Research Optimum 750W/110V model OPA512-S75-CLP28-SW with 28" internal through roof push up pole. Location(s): [#LOC] | $1,816 |
| 5450-0028 | Quartz light Fire Research Optimum 750W/110V model OPA530-S75-SR-SW with side mount external pole. Location(s): [#LOC]. | $1,697 |
| 5450-0029 | Quartz light Fire Research Optimum 750W/110V model OPA540-S75-SW with side mount pull up pole. Location(s): [#LOC] | $1,556 |
| 5450-0030 | Quartz light Fire Research Optimum 750W/110V model OPA600-S75-ON-OP603 with 40" telescopic tripod pole. Location(s): [#LOC]. | $1,688 |
| 5450-0031 | Quartz light Fire Research Optimum 750W/110V model OPA802-S75-01 with brow mount (EA). Location(s): [#LOC]. | $1,010 |

| Item No. | Description | |
|---|---|---|
| 5450-0032 | Quartz light Fire Research Optimum 900W/240V model OPA600-R90-ON-OP603 with telescopic tripod pole. Location(s): [#LOC] | $1,794 |
| 5450-0033 | Quartz light Fire Research Optimum 150W/12V model OPA530-HD15-SR-SW with side mount external pole. Includes switch accessible to driver. Location(s): [#LOC]. | $2,128 |
| 5450-0034 | Quartz light MagnaFire 900W/240V model KR-739-HD with portable base. Requires 220V receptacle. Location(s): [#LOC] | $659 |
| 5450-0035 | Quartz light MagnaFire 900W/240V model KR-1939 with recess mount. Location(s): [#LOC]. | $909 |
| 5450-0036 | Quartz light MagnaFire 900W/240V model KR-SB-639 without pole. Location(s): [#LOC]. | $1,054 |
| 5450-0037 | Quartz light MagnaFire 900W/240V model KR-939-I with internal pole. Location(s): [#LOC]. | $1,002 |
| 5450-0038 | Quartz light MagnaFire 900W/240V model KR-SB-539-W/2-I with external pole. Location(s): [#LOC]. | $1,311 |
| 5450-0039 | Quartz light MagnaFire 900W/240V model KR-SB-839-TM-I with external mount tripod telepole. Requires 220 volt receptacle. Location(s): [#LOC]. | $1,427 |
| 5450-0040 | Quartz light MagnaFire 900W/240V model KR-1339 with low profile mount. Location(s): [#LOC] | $1,042 |
| 5450-0041 | Quartz light MagnaFire 900W/240V model KR-1539 with cab brow mount (EA). Not available in front center due to DOT lights. Location(s): [#LOC]. | $924 |
| 5450-0045 | Quartz light MagnaFire 750W/120V model KR-736-HD with portable base. Requires 110V receptacle. Location(s): [#LOC] | $608 |
| 5450-0046 | Quartz light MagnaFire 750W/120V model KR-1936 with recess mount. Location(s): [#LOC]. | $944 |
| 5450-0047 | Quartz light MagnaFire 750W/120V model KR-SB-636 without pole. Location(s): [#LOC]. | $1,092 |
| 5450-0048 | Quartz light MagnaFire 750W/120V model KR-936-I with internal pole. Location(s): [#LOC]. | $1,082 |
| 5450-0049 | Quartz light MagnaFire 750W/120V model KR-SB-536-W/2-I with external pole. Location(s): [#LOC]. | $1,375 |
| 5450-0050 | Quartz light MagnaFire 750W/120V model KR-SB-836-TM-I with external mount tripod telepole. Requires 110V receptacle. Location(s): [#LOC]. | $1,584 |
| 5450-0051 | Quartz light MagnaFire 750W/120V model KR-1336 with low profile mount. Location(s): [#LOC] | $972 |
| 5450-0052 | Quartz light MagnaFire 750W/120V model KR-1536 with cab brow mount (EA). Location(s): [#LOC]. | $858 |
| 5450-0053 | Quartz light MagnaFire 750W/120V model KR-SB-436-I-XL with through body push up pole. Location(s): [#LOC] | $1,320 |
| 5450-0056 | Quartz light KwikRaze 1500W/220V model KR-SB-815-TM-I with external mount tripod telepole. Requires 220V receptacle. Location(s): [#LOC] | $1,703 |
| 5450-0058 | Quartz light Fire Research Optimum 1500W/240V model OPA510E-M15-SW with internal pull-up pole. Location(s): [#LOC]. | $1,719 |
| 5450-0059 | Quartz light Fire Research Optimum 750W/110V portable model OPA700-S75-OP703. Location(s): [#LOC]. | $860 |
| 5450-0060 | Quartz light Fire Research Focus 750W/120V model FCA300U-S75 with brow mount. Location: Center of cab brow. | $945 |
| 5450-0062 | Quartz light MagnaFire 750W/120V model KR-SB-236-I-SW2 SPCL with top raise external pole. Location(s): [#LOC] | $1,333 |
| 5450-0065 | Quartz light Fire Research Optimum 1000W/240V model OPA656-M12-ON-OP603 with telescopic tripod pole. Location(s): [#LOC] | $1,794 |
| 5450-0066 | Quartz light Fire Research Optimum 1500W/240V model OPA512-M15-SW with internal thru roof push up pole. Location(s): [#LOC] | $1,792 |
| 5450-0067 | Quartz light Fire Research Focus 500W/110V model FCA802-S50-01 with brow mount (EA). Light head and mount to be powder coated black. Location(s): [#LOC] | $920 |
| 5450-0068 | Quartz light MagnaFire 750W/120V model KR-SB-436-I-XL with through ceiling push up pole (PR). Outer pole to be 12" inner pole to be 48". Both lights to be on one breaker. Includes support tubes on interior of cab and switch each side on rear cab wall to control lights. Location: One each side rear corner of cab roof. | $3,244 |
| 5450-0069 | Quartz light MagnaFire 5000 500W/120V model KR-2555 with cab brow mount (EA). Location(s): [#LOC]. Not available in front center due to DOT lights. | $759 |
| 5450-0070 | Quartz light MagnaFire 5000 500W/120V model KR-SB-555-W/2-I with external pole. Location(s): [#LOC]. | $1,191 |
| 5450-0073 | Quartz light Fire Research Focus 750W/120V model FCA300U-S75 with brow mount. Light head and mount to be powder coated black. Location: Center of cab brow. | $994 |
| 5450-0074 | Quartz light timer (ea). | $144 |
| 5450-0075 | Quartz light Fire Research Optimum 900W/240V model OPA510E-R90-SW with top raise pole. Location(s): [#LOC]. | $1,697 |
| 5450-0078 | Quartz light Fire Research Focus 750W/110V model FCA802-S75-01 with brow mount (EA). Light head and mount to be powder coated black. Location(s): [#LOC] | $994 |

| Item No. | Description | |
|---|---|---|
| 5450-0079 | Quartz light MagnaFire 750W/120V model KR-1536 with cab brow mount (EA). Light head and mount to be powder coated black. Location(s): [#LOC]. | $908 |
| 5450-0080 | Quartz light Fire Research Focus 750W/110V model FCA830-S75 with brow mount (EA). Quest and CII LTH aerial cabs only. Location(s): [#LOC]. | $945 |
| 5450-0081 | Quartz light Fire Research Optimum 750W/110V model OPA656-S75-ON-OP603 with 28" telescopic tripod pole. Location(s): [#LOC] | $1,688 |
| 5450-0083 | Quartz light Fire Research Focus 1500W/240V model FCA530-M15-SR-SW with side mount push up pole. Location(s): [#LOC]. | $1,657 |
| 5450-0084 | Quartz light Fire Research Focus 150W/12V model FCA510E-D15-SW with internal pole. Includes switch accessible to driver. Location(s): [#LOC]. | $1,187 |
| 5450-0089 | Quartz light MagnaFire 900W/240V model KR-SB-539-W/2-I with external pole. Light head to be powder coated black. Location(s): [#LOC]. | $1,360 |
| 5450-0090 | Aerial circuit timer. | $268 |
| 5450-0092 | Quartz light Fire Research Focus 750W/110V model FCA530-S75-SR-SW with side mount push-up pole. Light head and mounts to be powder coated black. Location(s): [#LOC]. | $1,700 |
| 5450-0094 | Quartz light Extenda-Lite 750W/110V model E-4750-EX-TL-UI-EX. Location(s): [#LOC]. | $899 |
| 5450-0095 | Quartz light Fire Research Focus 150W/12V model FCA300U-D15 with brow mount. Includes switch accessible to driver. Location: center of cab brow. | $1,090 |
| 5450-0096 | Quartz light Fire Research Optimum 1000W/110V portable model OPA700-M10-OP703. Location(s): [#LOC]. | $981 |
| 5450-0098 | Quartz light Fire Research Optimum 1500W/240V model OPA600-M15-ON-OP603 with telescopic tripod pole. Location(s): [#LOC] | $1,865 |
| 5450-0099 | Quartz light Fire Research Optimum 1500W/240V model OPA200-M15 with recess mount. Location(s):[#LOC]. | $1,047 |
| 5450-0102 | Quartz light Fire Research Focus 1000W/120V model FCA530-M10-SR-SW-ON with external push up pole. Location(s): [#LOC]. | $1,761 |
| 5450-0114 | Quartz light Fire Research Focus 1000W/120V model FCA200-M10 with recess mount. Location(s): [#LOC]. | $877 |
| 5450-0115 | Light Whelen 12 volt Pioneer Plus model PFP1 with brow mount (EA). Includes switch in cab (driver and officer side facing lights switched separately). Location(s): [#LOC]. | $1,624 |
| 5450-0116 | Quartz light Fire Research Focus 500W/110V model FCA600-S50-ON-FC603 with 40" telescopic tripod pole. Location(s): [#LOC]. | $1,670 |
| 5450-0117 | Light Whelen Pioneer Plus model PFP2 12V with brow mount and PFLASH (EA). Includes switch in cab (driver and officer side facing lights switched separately). Location(s): [#LOC]. | $2,482 |
| 5450-0118 | Quartz light Fire Research Focus 1000W/240V model FCA802-M12-01 with brow mount (EA). Location(s): [#LOC]. | $1,002 |
| 5450-0121 | Quartz light Fire Research Focus 1500W/240V model FCA530-M15-SR-SW-ON with external push up pole. Location(s): [#LOC]. | $1,673 |
| 5450-0122 | Light Whelen Pioneer Plus model PFP2 12V with brow mount (EA). Includes switch in cab accessible to driver (driver and officer side facing lights switched separately). Location(s): [#LOC]. | $2,359 |
| 5450-0123 | Light Whelen Pioneer Plus LED model PFP2 12V with PBAPEDD pedestal mount. Includes switch in cab (side facing lights switched separately). Location(s): [#LOC]. | $2,334 |
| 5450-0124 | Light Whelen Pioneer model PFA2 with brow mount (EA). Includes switch in cab (driver and officer side facing lights switched separately). Location(s): [#LOC]. | $1,896 |
| 5450-0125 | Quartz light MagnaFire 5000 750W/120V model KR-2556 with cab brow mount (EA). Location(s): [#LOC]. | $858 |
| 5450-0126 | Quartz light Fire Research Focus 750W/110V model FCA642-S75-ON-FC6F3 with 16.625" telescopic tripod pole. Location(s): [#LOC]. | $1,670 |
| 5450-0127 | Quartz light Fire Research Focus 150W/12V model FCA802-H15-01 with brow mount (EA). Includes switch accessible to driver. Location(s): [#LOC] | $1,541 |
| 5450-0128 | FRC quartz light head and bracket to be powdered coated job color (EA). Requires paint spray out sent to FRC for color matching. | $192 |
| 5450-0130 | Quartz light MagnaFire 750W/120V model KR-2556 with cab brow mount (EA). Location(s): [#LOC]. Not available in front center due to DOT lights. | $858 |
| 5450-0134 | Light Whelen Pioneer Plus model PFP2 12V with brow mount powder coated black (EA). Includes switch in cab (driver and officer side facing lights switched separately). Location(s): [#LOC]. | $2,359 |
| 5450-0135 | Quartz light Fire Research Focus 150W/12V model FCA802-H15-01 with brow mount (EA). Light head and mount to be powder coated black. Includes switch accessible to driver. Location(s): [#LOC]. | $1,586 |

| Item No. | Description | |
|---|---|---|
| 5450-0136 | Light Whelen Pioneer Plus model PCP2 flood/spot with brow mount (EA). Includes switch in cab (driver and officer side facing lights switched separately). Location(s): [#LOC]. | $2,379 |
| 5450-0139 | Light Whelen Pioneer Plus model PFP1AC 120V with recess mount. Location(s): [#LOC]. | $1,443 |
| 5450-0140 | Light Whelen Pioneer model PFA1 with pedistal mount. Includes switch in cab (driver and officer side facing lights switched separately). Location(s): [#LOC]. | $1,556 |
| 5450-0141 | Quartz light Fire Research Optimum 150W/12V model OPA230-H15 with recess mount. Includes switch in cab console. Location(s): [#LOC]. | $1,624 |
| 5450-0143 | Light Whelen 12V Pioneer model PFP2 with PBA203 recess mount. Includes switch accessible to driver (side facing lights switched separately). Location: [#LOC]. | $2,244 |
| 5450-0144 | Fire Research FRC Evolution 12V LED scene light model FCA530-V15-SW-H with external push-up pole. Includes switch in cab accessible to driver. Location: [#LOC]. | $2,391 |
| 5450-0145 | Light Whelen Pioneer Plus model PFP1 12V with recess mount. Includes switch accessible to driver (side facing lights switched separately). Location(s): [#LOC]. | $1,393 |
| 5450-0153 | Light Whelen Pioneer Plus model PFP1 with bail mount. Includes switch in cab accessible to driver (side facing lights switched seperately). Location(s): [#LOC]. | $1,393 |
| 5450-0154 | Fire Research Evolution 12V LED scene light model FCA510E-V15-SW with internal pull-up pole. Includes switch accessible to driver. Location: [#LOC]. | $2,391 |
| 5450-0155 | Fire Research Evolution 12V LED scene light model FCA802-V15 with brow mount (EA). Includes switch accessible to driver (driver and officer side facing lights switched separately). Location: [#LOC]. | $2,057 |
| 5450-0156 | Quartz light Fire Research Evolution 12V LED model FCA300U-V15 with brow mount. Includes switch accessible to driver. Location: center of cab brow. | $1,985 |
| 5450-0161 | Light Whelen 12V Pioneer model PCP2 with internal push-up pole mount (Havis KR-SB-4PCP2-S-I). Includes switch on light head. Location(s): [#LOC]. | $2,415 |
| 5450-0166 | Light Whelen Pioneer Plus model PFP2AC 120V with recess mount. Location(s): [#LOC]. | $2,678 |
| 5450-0169 | Quartz light MagnaFire 750W/120V model KR-SB-836-TM-SL-I with external mount tripod telepole. Requires 110V receptacle. Location(s): [#LOC]. | $1,584 |
| 5450-0170 | Fire Research Evolution 12V LED model FCA210-V12 with recess mount. Includes switch in cab accessible to driver. Location(s): [#LOC]. | $1,897 |
| 5450-0171 | Light Whelen Pioneer model PFA1 with PBA103 recess mount. Includes switch accessible to driver. Location: [#LOC]. | $1,393 |
| 5450-0172 | Light Whelen Pioneer Plus model PFP1 12V with vertical bail mount. Includes switch in cab accessible to driver (side facing lights switched seperately). Location(s): [#LOC]. | $1,393 |
| 5450-0174 | Light Whelen Pioneer Plus model PFP1AC 120V with recess mount. Location(s): [#LOC]. | $1,443 |
| 5450-0176 | Light Whelen Pioneer Plus LED model PFP2 12V with pedestal mount powder coated black. Includes switch in cab (side facing lights switched separately). Location(s): [#LOC]. | $2,334 |
| 5450-0179 | Light Whelen Pioneer model PFA2 with brow mount powder coated FLNA3225E-1 (EA). Includes switch in cab (driver and officer side facing lights switched separately). Location(s): [#LOC]. | $1,959 |
| 5450-0181 | Light Fire Research Spectra 12V LED model SPA510E-Q20-SW with internal pull-up pole. Includes switch accessible to driver. Location(s): [#LOC]. | $2,861 |
| 5450-0183 | Fire Research Spectra 12V LED scene light model SPA530E-Q20-SW-H with external push-up pole. Includes switch in cab accessible to driver. Location: [#LOC]. | $2,859 |
| 5450-0185 | Light Whelen Pioneer model PFA1 with brow mount (EA). Includes switch in cab (driver and officer side facing lights switched separately). Location(s): [#LOC]. | $1,233 |
| 5450-0186 | Light Whelen Pioneer model PFA1 with vertical bail mount. Includes switch in cab (driver and officer side facing lights switched separately). Location(s): [#LOC]. | $1,147 |
| 5450-0188 | Quartz light MagnaFire 5000 500W/120V model KR-SB-555-W/2-I-SL with (special length) external pole. Location(s): [#LOC]. | $1,191 |
| 5450-0190 | Fire Research Spectra 12V LED model SPA260-Q15 with surface mount. Includes switch accessible to driver. Location: [#LOC]. | $1,926 |
| 5450-0191 | Light Fire Research Spectra 120V LED model SPA600-K20-ON-SPA603 with 40" telescopic tripod pole. Location(s): :[#LOC]. | $3,299 |
| 5450-0192 | Light Fire Research Spectra 120V LED model SPA830-K20 with universal brow mount (EA). Location: [#LOC]. | $2,498 |
| 5450-0193 | Light Fire Research Spectra LED 110V model SPA510-K20 with internal pull-up pole. Location(s): [#LOC]. | $2,554 |
| 5450-0194 | Light Whelen Pioneer model PCP2 with PBA203 recess mount. Includes switch in cab accessible to driver (driver and officer side facing lights switched separately). Location: [#LOC]. | $2,288 |

| Item No. | Description | |
|---|---|---|
| 5450-0195 | Whelen Micro Pioneer Series Super LED Work/Scene Light Model MPR15W with 15 degree recess mount (EA). Includes switch accessible to driver (side facing lights switched seperately). Location: [#LOC]. | $756 |
| 5450-0197 | Light Whelen Pioneer model PFP2 12V powder coated FLNA3225E-1 red with internal top raise pole mount (ROM model KR-9PFP2-S). Includes switch on light head. Location: [#LOC]. | $2,203 |
| 5450-0198 | Light Whelen Pioneer Plus model PFP2 12V with brow mount powder coated FLNA3225E-1 red (EA). Includes switch in cab accessible to driver (driver and officer side facing lights switched separately). Location(s): [#LOC]. | $2,460 |
| 5450-0199 | Light Whelen Pioneer Plus model PFP1 12V with vertical bail mount powder coated FLNA3225E-1 red. Includes switch in cab accessible to driver (side facing lights switched seperately). Location(s): [#LOC]. | $1,495 |
| 5450-0200 | Fire Research Spectra 120V LED scene light model SPA530-K20-SW-H with external push-up pole. Location: [#LOC]. | $2,859 |
| 5450-0201 | Light Fire Research Spectra LED 12V model SPA570-Q20 without pole. Includes switch accessible to driver (driver and officer side facing lights switched seperately). Location(s): [#LOC]. | $2,644 |
| 5450-0202 | Fire Research Spectra 120V LED model SPA260-K15 with surface mount. Location: [#LOC]. | $2,328 |
| 5450-0204 | Light Whelen Micro Pioneer Plus model MPBW with bail mount. Includes switch in cab accessible to driver (side facing lights switched separately). Location: [#LOC]. | $761 |
| 5450-0208 | Fire Research Spectra 12V LED model SPA802-Q20-02 with brow mount (EA). Includes switch accessible to driver. Location: [#LOC]. | $2,498 |
| 5450-0209 | Fire Research Spectra 12V LED model SPA802-Q20-02 with brow mount powder coated black (EA). Includes switch accessible to driver. Location: [#LOC]. | $2,550 |
| 5450-0210 | Light Fire Research Spectra LED 240V model SPA570-J20 without pole. Location(s): [#LOC]. | $2,644 |
| 5450-0211 | Light Fire Research Spectra 240V LED model SPA512-J20-SW with internal thru roof push up pole. Includes switch accessible to driver. Location(s): [#LOC]. | $3,044 |
| 5450-0212 | Quartz light Fire Research Focus 1500W/240V model FCA570-M15 without pole. Location(s): [#LOC]. | $1,330 |
| 5450-0214 | Light Whelen Pioneer Plus model PFP1 12V powder coated black with vertical bail mount. Includes switch in cab accessible to driver (side facing lights switched seperately). Location(s): driver and officer side rear of body up high. | $1,393 |
| 5450-0215 | Light Whelen 12V Pioneer model PFP2 powder coated black with PBA203 recess mount. Includes switch accessible to driver (side facing lights switched separately). Location: driver and officer side centrally located in center area recessed into roof top compartment raise. | $2,244 |
| 5450-0216 | Quartz light Fire Research Spectra 120V LED model SPA802-K20-02 with brow mount (EA). Location: [#LOC]. | $2,498 |
| 5450-0218 | Fire Research Evolution 12V LED model FCA210-V12 with recess mount powder coated black. Includes switch in cab accessible to driver. Location(s):[#LOC]. | $1,941 |
| 5450-0220 | Quartz light MagnaFire 750W/120V model KR-1936 with recess mount in diamond plate mounting box. Location(s): [#LOC]. | $1,119 |
| 5450-0221 | Quartz light MagnaFire 5000 750W/120V model KR-2556 with cab brow mount (EA). Light head to be powder coated black. Location(s): [#LOC]. | $939 |
| 5450-0222 | Quartz light MagnaFire 750W/120V model KR-1336 with low profile mount. Light head to be powder coated black. Location(s): [#LOC] | $1,063 |
| 5450-0223 | Quartz light MagnaFire 750W/120V model KR-SB-536-W/2-I with external pole. Light head to be powder coated black. Location(s): [#LOC]. | $1,428 |
| 5450-0224 | Quartz light Fire Research Focus 1000W/120V model FCA600-M10-ON-6F3 with telescopic tripod pole. Location(s): [#LOC]. | $1,807 |
| 5450-0226 | Light Whelen Pioneer Plus model PFP1AC 120V with vertical bail mount. Location(s): [#LOC]. | $1,582 |
| 5450-0227 | Light Whelen Pioneer Plus LED model PFP1 12V with PBAPEDD pedestal mount. Includes switch in cab (side facing lights switched separately). Location(s): [#LOC]. | $1,663 |
| 5450-0230 | Floodlight Whelen/ROM model KR-SB-8PFP2AC-I-TM with external mount tripod telepole. Pole length required shall be determined upon mounted location. Requires 110V receptacle. Location(s): [#LOC]. | $2,904 |
| 5450-0231 | Light Whelen Pioneer Plus LED model PFP2 12V with PBAPEDD pedestal mount powder coated black housing mounting brackets applicable shall also be black. Includes switch in cab (side facing lights switched separately). Location(s): [#LOC]. | $2,382 |
| 5450-0232 | Light Whelen Pioneer Plus model PCP2AFSB 120VAC flood/spot with brow mount powder coated black (EA). Location(s): [#LOC]. | $2,379 |
| 5450-0233 | Light Whelen Pioneer Plus model PCP2ASFB 120VAC spot/flood with brow mount powder coated black (EA). Location(s): [#LOC]. | $2,379 |

| Item No. | Description | |
|---|---|---|
| 5450-0234 | Light Whelen Pioneer Plus model PCP2AFSB 120VAC flood/spot with pedestal mount powder coated black. Location(s): [#LOC]. | $2,375 |
| 5450-0235 | Light Whelen Pioneer Plus model PCP2ASFB 120VAC spot/flood with pedestal mount powder coated black. Location(s): [#LOC]. | $2,375 |
| 5450-0237 | Light Whelen Pioneer Plus 12V model PCP2 flood/spot with pedestal mount. Includes switch in cab (driver and officer side facing lights switched separately). Location(s): [#LOC]. | $2,375 |
| 5450-0239 | Light Whelen Pioneer Plus model PCP2 flood/spot with pedestal mount (EA). Includes switch in cab (driver and officer side facing lights switched separately). Location(s): [#LOC]. | $2,375 |
| 5450-0242 | Fire Research Spectra 12V LED model SPA260-Q15 powder coated black with surface mount. Includes switch accessible to driver. Location: [#LOC]. | $1,980 |
| 5450-0243 | Quartz light Fire Research Spectra 120V LED model SPA260-K15 powder coated black with surface mount. Location: [#LOC]. | $2,381 |
| 5450-0244 | Light Whelen Pioneer Plus LED model PCP3 12V combination flood and 8 degree spotlight with pedestal mount adapter. Includes switch in cab (side facing lights switched separately). Location(s): [#LOC]. | $2,657 |
| 5450-0246 | Light Whelen Micro Pioneer Plus model MPBB with bail mount powder coated black. Includes switch in cab accessible to driver (side facing lights switched separately). Location: [#LOC]. | $761 |
| 5450-0247 | Quartz light MagnaFire 750W/120V model KR-1936 with recess mount powder coated black. Location(s): [#LOC]. | $986 |
| 5450-0248 | Quartz light Fire Research Optimum 1000W/240V model OPA510E-M12-SW with internal pull up pole. Location(s): [#LOC]. | $1,719 |
| 5450-0252 | Light Whelen Pioneer model PFA2 with PBA203 recess mount. Includes switch in cab (driver and officer side facing lights switched separately). Location: [#LOC]. | $2,020 |
| 5450-0255 | Light Fire Research Evolution LED 12V model FCA580-V15 side fixed mount. Includes switch accessible to driver. Location(s): [#LOC]. | $1,948 |
| 5450-0256 | Floodlight Whelen PFP1AC 120v with external mount tripod telepole. Requires 110V receptacle. Location(s): [#LOC]. | $2,643 |
| 5450-0257 | Light Whelen Pioneer model PFP2 12V with external bottom raise pole mount. Includes switch accessible to driver. Location(s): [#LOC]. | $2,602 |
| 5450-0258 | Light Whelen Pioneer Plus model PFP2 12V with internal top raise pole mount. Includes switch accessible to driver. Location: [#LOC]. | $2,353 |
| 5450-0259 | Floodlight Whelen PFP2AC 110V with external mount 50" tripod telepole. Requires 110V receptacle. Location(s): [#LOC]. | $3,273 |
| 5450-0260 | Light Whelen Pioneer model PCP2AP 120V with external bottom raise pole mount. Location(s): [#LOC]. | $2,945 |
| 5450-0261 | Light Whelen Pioneer model PFP2AC 120V with external bottom raise pole mount. Location(s): [#LOC]. | $2,708 |
| 5450-0262 | Light Whelen Pioneer model PFP2 12V with external bottom raise pole mount. Includes switch accessible to driver. Location(s): [#LOC]. | $2,617 |
| 5450-0263 | Light Whelen Pioneer Plus model PCP2 12V flood/spot with brow mount powder coated black. Includes switch in cab (driver and officer side facing lights switched separately). Location(s): [#LOC]. | $2,379 |
| 5450-0265 | Light Whelen Pioneer model PFP2AC 120V with internal top raise pole mount. Location: [#LOC]. | $2,645 |
| 5450-0266 | Light Whelen Pioneer Plus model PFP2 12V with recess mount. Includes switch accessible to driver (driver and officer switched seperately) and diamond plate mounting boxes for recess mount. Location: [#LOC]. | $2,528 |
| 5450-0267 | Light Whelen 150W/120V with portable base. Requires 110V receptacle. Location(s): [#LOC]. | $2,442 |
| 5450-0268 | Light Fire Research Spectra LED 120V model SPA570-K20 without pole powder coated black. Location(s): [#LOC]. | $2,696 |
| 5450-0269 | Light Fire Research Spectra LED 110V model SPA510-K20 with internal pull-up pole powder coated black. Location(s): [#LOC]. | $2,606 |
| 5450-0270 | Fire Research Evolution 12V LED scene light model FCA510E-V15-SW with internal pull-up pole powder coated black. Includes switch accessible to driver. Location: [#LOC]. | $2,445 |
| 5450-0271 | Akron SceneStar 120V LED model ELSS-XLAC-SM2-PS-UI-TL. Location: [#LOC]. | $2,334 |
| 5450-0272 | Light Whelen Pioneer model PFP2AC 120V powder coated black with internal bottom raise pole mount. Location: [#LOC]. | $2,645 |
| 5450-0273 | Quartz light Fire Research Optimum 1500W/240V model OPA642-M15-ON-603 with 16.625" telescopic tripod pole. Location(s): [#LOC]. | $1,754 |
| 5450-0274 | Fire Research Spectra 12V LED scene light model SPA530E-Q20-SW-H with external push-up pole powder coated black. Includes switch in cab accessible to driver. Location: [#LOC]. | $2,912 |

| Item No. | Description | |
|---|---|---|
| 5450-0276 | Akron SceneStar 12V LED model ELSS-XLDC-PU-UI-TL. Location:[#LOC]. | $2,037 |
| 5450-0277 | Light Whelen Pioneer model PFP2 12V powder coated black with external bottom raise pole mount. Includes switch accessible to driver. Location(s) [#LOC]. | $2,602 |
| 5450-0278 | Light Whelen Pioneer Plus model PFP2 12V with recess mount. Location(s): [#LOC]. | $2,678 |
| 5450-0279 | Floodlight Whelen PFP2AC 110V powder coated black with external mount 40" tripod telepole. Requires 110V receptacle. Location(s): [#LOC]. | $3,273 |
| 5450-0280 | Light Whelen Pioneer model PFP1AC 120V with internal top raise pole mount. Location: [#LOC]. | $1,889 |
| 5450-0281 | Quartz light Fire Research Focus 1000W/240V model FCA300U-M12 with roof mount. Location(s): [#LOC]. | $1,002 |
| 5450-0282 | Light Whelen Pioneer model PCP2 12V powder coated black with external bottom raise pole mount. Includes switch accessible to driver. Location(s) [#LOC]. | $2,602 |
| 5450-0283 | Light Whelen Pioneer Plus model PFP2 12V powder coated black with internal top raise pole mount. Includes switch accessible to driver. Location: [#LOC]. | $2,353 |
| 5450-0284 | Light Whelen 150W/120V with portable base powder coated black. Requires 110V receptacle. Location(s): [#LOC]. | $2,442 |
| 5450-0285 | Floodlight Whelen PFP2AC 110V with external mount custom length tripod telepole. Requires 110V receptacle. Location(s): [#LOC]. | $3,273 |
| 5450-0286 | Light Whelen Pioneer model PCP2 12V with external bottom raise pole mount. Includes switch accessible to driver. Location(s) [#LOC]. | $2,602 |
| 5450-0287 | Light Whelen 12 volt Pioneer Plus model PFP1 with brow mount (EA) powder coated black. Includes switch in cab (driver and officer side facing lights switched separately). Location(s): [#LOC]. | $1,624 |
| 5450-0288 | Light Whelen Pioneer Plus model PFP1 powder coated black with bail mount. Includes switch in cab accessible to driver (side facing lights switched seperately). Location(s): [#LOC]. | $1,393 |
| 5450-0289 | Light Whelen Pioneer model PFP1 12V with external bottom raise custom length pole. Includes switch accessible to driver. Location(s): [#LOC]. | $1,810 |
| 5450-0290 | Light Whelen Pioneer model PFP1 12V with internal top raise pole mount. Includes switch accessible to driver. Location: [#LOC]. | $1,746 |
| 5450-0292 | Light FireTech model FT-SL-15-110-W 120V with internal top raise pole mount (ROM model KR-900-I) pre-assembled from vendor. Location: [#LOC]. | $2,537 |
| 5450-0294 | Light Whelen Pioneer Max model PCP3 12V with Whelen external bottom raise pole mount. Includes switch accessible to driver. Location(s): [#LOC]. | $2,966 |
| 5450-0295 | LED scene light ExtendaLite 220W/12V model ELSS-XLDC-PS-SM2-UI-SW with telescopic external push-up pole. Includes switch accessible to driver in cab. Location(s): [#LOC]. | $2,294 |
| 5450-0296 | Fire Research Evolution 12V LED scene light model FCA570-V15 without pole. Includes switch in cab accessible to driver. Location: [#LOC]. | $2,025 |
| 5450-0297 | Light Fire Research Spectra LED 110V model SPA700-K20 with portable mount. Requires 110V receptacle. Location(s): [#LOC]. | $2,417 |
| 5450-0298 | Light Whelen Pioneer Plus model PFP1 12V with recess mount with painted stainless steel box. Includes switch accessible to driver (side facing lights switched separately). Location(s): [#LOC]. | $1,603 |
| 5450-0300 | Light Whelen Pioneer Plus model PFP2AC 120V with recess mount. Locate [#LOC]. Includes diamond plate mounting box for recess mount. | $2,850 |
| 5450-0301 | Light Fire Research Spectra 120V LED model SPA656-K20-ON-SPA603 with 28" telescopic tripod pole. Location(s): [#LOC]. | $3,299 |
| 5450-0302 | Light Fire Research Spectra 120V LED model SPA642-K20-ON-SPA603 with 16" telescopic tripod pole. Location(s): [#LOC]. | $3,299 |
| 5450-0303 | Light Whelen Pioneer model PFP2AC 120V with external top raise pole mount. Location(s): [#LOC]. | $2,708 |
| 5450-0304 | Light Whelen Pioneer Plus model PFP2 12V with bail mount. Includes switch in cab accessible to driver (side facing lights switched seperately). Location(s): [#LOC]. | $2,082 |
| 5450-0305 | Akron SceneStar 12V LED model ELSS-SLDC-PU-UI-TL. Location: [#LOC]. | $1,963 |
| 5450-0306 | Light Whelen Pioneer Plus model PCP2AFSP 120VAC flood/spot with pedestal mount. Location(s): [#LOC]. | $2,633 |
| 5450-0307 | Light Whelen Pioneer Plus 12V model PCP2 flood/spot with pedestal mount powder coated black. Includes switch in cab (driver and officer side facing lights switched separately). Location(s): [#LOC]. | $2,375 |
| 5450-0309 | Light Whelen Pioneer Plus 12V model PFP2 flood with pedestal mount. Includes switch in cab (driver and officer side facing lights switched separately). Location(s): [#LOC]. | $2,314 |

| Item No. | Description | |
|---|---|---|
| 5450-0310 | Fire Research Spectra 120V LED model SPA260-K15 with surface mount and diamond plate mounting box. Location: [#LOC]. | $2,496 |
| 5450-0311 | Light Whelen Pioneer Plus model PCP2 flood/spot with Quest brow mount (EA). Includes switch in cab (driver and officer side facing lights switched separately). Location(s): [#LOC]. | $2,379 |
| 5450-0312 | Quartz light Fire Research Optimum 1000W/240V model OPA530-M12-SR-SW-ON with external push up pole. Location(s): [#LOC]. | $1,559 |
| 5450-0313 | FireTech 11" 12V double stack brow light powder coated white. Includes switch in cab (driver and officer side facing lights switched separately). Location: [#LOC] | $1,332 |
| 5450-0314 | FireTech 11" 12V double stack bracket mounted light. Includes switch in cab (driver and officer side facing lights switched separately). Location: [#LOC] | $1,332 |
| 5450-0315 | Quartz light Fire Research Optimum 750W/110V model OPA642-S75-ON-603 with 16.625" telescopic tripod pole. Location(s): [#LOC]. | $1,688 |
| 5450-0316 | Light Whelen Pioneer model PFP1 12V with PBA103 recess mount in painted smooth plate boxes. Includes switch accessible to driver (driver and officer side facing lights switched separately). Location: [#LOC]. | $1,620 |
| 5450-0317 | Quartz light Fire Research Focus 1000W/120V model FCA530-M10-CL50-SR-SW-ON with external push up pole. Location(s): [#LOC]. | $1,761 |
| 5450-0318 | Fire Research Spectra Max 12V LED model SPA260-Q20 with surface mount. Includes switch accessible to driver. Location: [#LOC]. | $2,140 |
| 5450-0319 | Akron SceneStar 12V LED model ELSS-XLDC-SM2-PS-UI-TL. Includes switch accessible to driver. Location: [#LOC]. | $2,334 |
| 5450-0320 | Light Whelen Pioneer Plus model PFP1 12V powder coated black with recess mount. Includes switch accessible to driver (side facing lights switched separately). Location(s): [#LOC]. | $1,393 |
| 5450-0322 | Light Fire Research Spectra Max 120V LED model SPA642-K28-ON-SPA603 with 16" telescopic tripod pole. Location(s): [#LOC]. | $3,299 |
| 5450-0323 | Light Whelen Pioneer Plus model PFP2AC 120V powder coated black with recess mount. Location(s): [#LOC]. | $2,678 |
| 5450-0324 | Light Whelen Pioneer model PCP2 powder coated black with PBA203 recess mount in fabricated diamond plate boxes. Includes switch in cab (driver and officer side facing lights switched separately). Location: [#LOC]. | $2,467 |
| 5450-0325 | Light Whelen Pioneer model PCP2 with chrome surface mount. Includes switch in cab accessible to driver (driver and officer side facing lights switched separately). Location: [#LOC]. | $2,028 |
| 5450-0326 | Fire Research Spectra 12V LED model SPA260-Q15 with surface mount and diamond plate mounting box. Location: [#LOC]. | $2,105 |
| 5450-0327 | Light Whelen Pioneer model PFP2AC 120V with internal bottom raise pole mount. Location: [#LOC]. | $2,645 |
| 5450-0328 | Federal Signal Commander 12V LED scene light model COMLC15K-510E-SW with internal pull-up pole. Includes switch accessible to driver. Location: [#LOC]. | $2,391 |
| 5450-0329 | Fire Research Spectra 120V LED model SPA260-K15 with surface mount and smooth plate painted mounting box. Location: [#LOC]. | $2,604 |
| 5450-0330 | Diamond plate mounting boxes (4). For use with scene lights and warning lights. Locate on driver side forward and rearward compartment tops outboard; boxes to be full depth of compartment top. Officer side forward and rearward upper body corners. | $894 |
| 5450-0331 | Quartz light Fire Research Focus 500W/110V model FCA802-S50-01 with brow mount (EA). Location(s): [#LOC]. | $920 |
| 5450-0332 | Light Whelen Pioneer model PFP2AC 120V powder coated black with external bottom raise pole mount. Location(s): [#LOC]. | $2,708 |
| 5450-0333 | Quartz light KwikRaze 1500W/220V model KR-93D-I-NCW with internal telepole. Location(s): [#LOC]. | $960 |
| 5450-0334 | Akron SceneStar 120V LED model ELSS-XLAC-RM recess mount. Location: [#LOC]. | $1,962 |
| 5450-0335 | LED light Akron SceneStar 220W/12V model ELSS-XLDC-BL. Includeds switch accessible to driver. Location(s): [#LOC]. | $2,140 |
| 5450-0336 | Quartz light Fire Research Focus 500W/120V model FCA300U-S50 with brow mount. Location: Center of cab brow. | $945 |
| 5450-0337 | FireTech 35" 12V mini brow light with white housing. Includes switch in cab (driver and officer side facing lights switched separately). Location: [#LOC] | $1,983 |
| 5450-0339 | FireTech 46" 12V brow light with black housing. Includes switch accessible to driver (driver and officer side facing lights switched separately). Location: [#LOC] | $2,337 |
| 5450-0340 | Extended brow light brackets for use with FireTech front brow light with standard cab trough. | $257 |
| 5450-0343 | Light Whelen 12V Pioneer model PFP2 powder coated black with PBA203 recess mount. Includes switch accessible to driver (side facing lights switched separately). Location: [#LOC]. | $2,244 |

| Item No. | Description | |
|---|---|---|
| 5450-0344 | Light Whelen Slimline Pioneer Plus model PSL2 12V with recess mount. Includes switch in cab accessible to driver (side facing lights switched seperately). Location: [#LOC]. | $1,315 |
| 5450-0347 | Quartz light Fire Research Optimum 750W/110V portable model OPA700-S75-OP703 powder coated black. Location(s): [#LOC]. | $935 |
| 5450-0348 | Light Whelen Slimline Pioneer Plus model PSL2 12V with pedestal mount. Includes switch in cab accessible to driver (side facing lights switched seperately). Location: [#LOC]. | $1,379 |
| 5450-0349 | Floodlight Whelen PFP2AC 110V powder coated black with external mount 50" tripod telepole. Requires 110V receptacle. Location(s): [#LOC]. | $3,273 |
| 5450-0350 | Light Whelen Pioneer model PFP1AC 120V with external bottom raise pole mount. Location(s): [#LOC]. | $2,257 |
| 5450-0351 | Light Whelen Pioneer model PCP2 with PBA203 recess mount in smooth plate mounting boxes painted job (2-tone if applicable) color. Includes switch in cab (driver and officer side facing lights switched separately). Location: [#LOC]. | $2,508 |
| 5450-0352 | Light Fire Research Spectra 120V LED model SPA512-K20-CLP64.5-SW with 64.5" inner pole and 31.5" outer pole. Location(s): [#LOC] | $2,938 |
| 5450-0353 | Light Fire Research Spectra 12V LED model SPA850-Q20 with flat mount. Location: [#LOC]. | $2,436 |
| 5450-0354 | Fire Research Spectra 120V LED model SPA260-K20 with surface mount. Location: [#LOC]. | $2,524 |
| 5450-0355 | Fire Research Spectra 120V LED scene light model SPA540-K20-CL-SW-H powder coated black with external pull-up pole. Location: [#LOC]. | $2,906 |
| 5450-0356 | Quartz light Fire Research Evolution 12V LED model FCA300U-V15 with brow mount powder coated black. Includes switch accessible to driver. Location: center of cab brow. | $2,028 |
| 5450-0357 | Light FireTech model FT-SL-15-W 12V with internal top raise pole mount (ROM model KR-900-I) pre-assembled from vendor. Includes switch in cab accessible to driver (side facing lights switched seperately). Location: [#LOC]. | $2,410 |
| 5450-0359 | Federal Signal Commander 12V LED scene light model COMM15K-530-SW-H with external push-up pole. Includes switch in cab accessible to driver. Location: [#LOC]. | $2,391 |
| 5450-0360 | Federal Signal Commander 12V LED scene light model COM15K-802 with brow mount (EA). Includes switch accessible to driver (driver and officer side facing lights switched separately). Location: [#LOC]. | $2,057 |
| 5450-0361 | FireTech 11" 12V double stack brow light powder coated black. Includes switch in cab (driver and officer side facing lights switched separately). Location: [#LOC] | $1,332 |
| 5450-0362 | FireTech 21" 12V recessed mini brow light model FT-MB-2.18-W. Location: [#LOC]. | $1,980 |
| 5450-0363 | Light Whelen Pioneer model PCP1SM1C with chrome surface mount. Includes switch in cab accessible to driver (driver and officer side facing lights switched separately). Location: [#LOC]. | $1,197 |
| 5450-0364 | Light Whelen Pioneer Plus model PFP2 12V with recess mount. Includes switch accessible to driver (driver and officer switched seperately) and aluminum smooth plate painted job color mounting boxes for recess mount. Location: [#LOC]. | $2,732 |
| 5450-0365 | FireTech 42" 12V mini brow light. Includes switch in cab (driver and officer side facing lights switched separately). Location: [#LOC]. | $2,163 |
| 5450-0366 | Fire Research Spectra Max 12V LED model SPA802-Q28-02 with brow mount (EA). Includes switch accessible to driver. Location: [#LOC]. | $2,724 |
| 5450-0367 | FireTech 35" 12V mini brow light with black housing. Includes switch in cab (driver and officer side facing lights switched separately). Location [#LOC]. | $1,983 |
| 5450-0368 | No exposed wire connection for FireTech 72" 12V brow light with integrated marker lights. Locate: Front of cab roof. | $248 |
| 5450-0369 | No exposed wire connection for FireTech 12V mini brow light. Locate: Roll up door header B1. | $248 |
| 5450-0370 | Light Whelen Pioneer Plus model PFP2 12V with vertical bail mount. Includes switch in cab accessible to driver (side facing lights switched seperately). Location(s): [#LOC]. | $1,983 |
| 5450-0371 | Light Fire Research Spectra MS 12V LED model SPA510E-R14-SW with internal pull-up pole. Includes switch accessible to driver. Location(s): [#LOC]. | $1,960 |
| 5450-0372 | Fire Research Mini-Spectra 12V LED scene light model SPA530-R14-CL-SW-H with external push-up pole. Location: [#LOC]. | $2,166 |
| 5450-0373 | FireTech 46" 12V brow light with white housing. Includes switch accessible to driver (driver and officer side facing lights switched separately). Location: [#LOC]. | $2,337 |
| 5450-0374 | FireTech 42" 12V mini brow light with black housing. Includes switch in cab (driver and officer side facing lights switched separately). Location: [#LOC]. | $2,163 |
| 5450-0375 | Light Fire Research Spectra Max LED 12V model SPA570-Q28 without pole. Includes switch accessible to driver (driver and officer side facing lights switched seperately). Location(s): [#LOC]. | $2,752 |
| 5450-0376 | Light Fire Research Spectra MS 120V LED model SPA600-T14-ON-SPA603 with 40" telescopic tripod pole. Location(s): [#LOC]. | $2,278 |

| Item No. | Description | |
|---|---|---|
| 5450-0378 | Light Whelen Pioneer model PCP2SM2C with smooth plate mounting box painted job color (two-tone job color if applicable). Includes switch in cab accessible to driver (driver and officer side facing lights switched separately). Location: [#LOC]. | $2,216 |
| 5450-0379 | Light Whelen Pioneer model PCP2SM2C with diamond plate mounting box. Includes switch in cab accessible to driver (driver and officer side facing lights switched separately). Location: [#LOC]. | $2,111 |
| 5450-0380 | Light Whelen Pioneer model PCPSM1B with black surface mount. Includes switch in cab accessible to driver (driver and officer side facing lights switched separately). Location: [#LOC]. | $1,197 |
| 5450-0383 | Light Whelen Pioneer model PFP2AC 120V powder coated black with external bottom raise pole mount. Location(s): [#LOC]. | $2,708 |
| 5450-0385 | Light Whelen Pioneer model PCP2 powder coated black with PBA203 recess mount. Includes switch in cab accessible to driver (driver and officer side facing lights switched separately). Location: [#LOC]. | $2,288 |
| 5450-0386 | Quartz light Fire Research Focus 1000W/240V model FCA510E-M12-SW with internal pull up pole. Location(s): [#LOC]. | $1,619 |
| 5450-0387 | FireTech 21" 12V double stack brow light powder coated black with combo spot/flood optics. Includes switch in cab (driver and officer side facing lights switched separately). Location: [#LOC] | $1,936 |
| 5450-0388 | Fire Research Mini-Spectra 120V LED scene light model SPA530-T14-SW-H with external push-up pole. Location: [#LOC]. | $2,065 |
| 5450-0389 | FireTech 31" 12V mini brow light with black housing. Includes switch in cab (driver and officer side facing lights switched separately). Location [#LOC]. | $1,848 |
| 5450-0390 | FireTech 20" 12V mini brow light. Includes switch in cab (driver and officer side facing lights switched separately). Location: [#LOC] | $1,164 |
| 5450-0391 | Light Whelen Pioneer model PCP2SM2B with black surface mount. Includes switch in cab accessible to driver (driver and officer side facing lights switched separately). Location: [#LOC]. | $2,028 |
| 5450-0392 | Light Whelen Pioneer model PCP2SM2B with black housing and diamond plate mounting box. Includes switch in cab accessible to driver (driver and officer side facing lights switched separately). Location: [#LOC]. | $2,111 |
| 5450-0393 | Light Whelen Pioneer model PCP2SM2B with black housing and painted smooth plate mounting box. Includes switch in cab accessible to driver (driver and officer side facing lights switched separately). Location: [#LOC]. | $2,164 |
| 5450-0394 | Fire Research Spectra Max 12V LED model SPA802-Q28-02 with brow mount (EA) powder coated black. Includes switch accessible to driver. Location: [#LOC]. | $2,775 |
| 5450-0395 | FireTech 35" 12V mini brow light with black housing. Includes switch in cab (driver and officer side facing lights switched separately). Location: [#LOC] | $1,983 |
| 5450-0397 | Light Whelen Pioneer Plus model PFP2 12V with recess mount. Includes switch accessible to driver (driver and officer switched separately) with aluminum smooth plate mounting boxes painted job color for recess mount. Location: [#LOC]. | $2,732 |
| 5450-0399 | Light Whelen Pioneer Plus 12V model PFP1 flood with side mount pedestal bracket. Includes switch in cab (driver and officer side facing lights switched separately). Location(s): Rearward upper body panel officer side (inboard of warning lights if equipped) | $1,754 |
| 5450-0400 | Light Whelen Pioneer Plus 12V model PFP1 flood with side mount pedestal bracket powder coated black. Includes switch in cab (driver and officer side facing lights switched separately). Location(s): [#LOC]. | $1,754 |
| 5450-0401 | Light Whelen Pioneer Plus model PFP2 12V with internal bottom raise pole mount. Includes switch accessible to driver. Location: [#LOC]. | $2,616 |
| 5450-0402 | Light Whelen PCP3AP1 225W/120V with portable base. Requires 110V receptacle. Location(s): [#LOC]. | $2,731 |
| 5450-0403 | Light Whelen Pioneer Max model PCP3 120V with Whelen external bottom raise pole mount. Location(s): [#LOC]. | $2,966 |
| 5450-0404 | Light Fire Research Spectra Max LED 120V model SPA570-K28 without pole. Location(s): [#LOC]. | $2,752 |
| 5450-0405 | Fire Research Mini Spectra 12V LED model SPA802-R14-02 with brow mount (EA). Includes switch accessible to driver. Location: [#LOC].. | $1,681 |
| 5450-0406 | Fire Research FRC Evolution 12V LED scene light model FCA530-V15-SW-H with external push-up pole powder coated black. Includes switch in cab accessible to driver. Location: [#LOC]. | $2,431 |
| 5450-0407 | Quartz light Fire Research Spectra 120V LED model SPA802-K20-02 with brow mount (EA) powder coated black. Location: [#LOC]. | $2,546 |
| 5450-0408 | Light Whelen Pioneer Plus 12V model PFS2 flood/spot with pedestal mount powder coated FLNA3225E-1 red. Includes switch in cab (driver and officer side facing lights switched separately). Location(s): [#LOC]. | $2,464 |

| Item No. | Description | |
|---|---|---|
| 5450-0409 | Light Whelen Pioneer Plus model PFS2 flood/spot with brow mount powder coated FLNA3225E-1 red (EA). Includes switch in cab (driver and officer side facing lights switched separately). Location(s): [#LOC]. | $2,468 |
| 5450-0410 | Light Whelen 12 volt Pioneer Plus model PFS1 flood/spot with brow mount powder coated FLNA3225E-1 red (EA). Includes switch in cab (driver and officer side facing lights switched separately). Location(s): [#LOC]. | $1,714 |
| 5450-0412 | Light Whelen Pioneer model PFP1 12V powder coated black with PBA103 recess mount in painted smooth plate boxes. Includes switch accessible to driver (driver and officer side facing lights switched separately). Location: [#LOC]. | $1,620 |
| 5450-0414 | Light FireTech model FT-SL-30-B 12V with internal top raise pole mount (ROM model KR-900-I) pre-assembled from vendor powder coated black. Includes switch in cab accessible to driver (side facing lights switched seperately). Location: [#LOC]. | $2,964 |
| 5450-0415 | FireTech 65" 12V brow light with black housing. Includes switch accessible to driver (driver and officer side facing lights switched separately). Location: [#LOC]. | $3,372 |
| 5450-0416 | Light Whelen 12V Pioneer Plus model PFS2 flood/spot with brow mount (EA). Includes switch in cab (driver and officer side facing lights switched separately). Location(s): [#LOC]. | $2,379 |
| 5450-0418 | Light Whelen 12V Pioneer model PFS2 with external bottom raise pole mount. Includes switch accessible to driver. Location(s) [#LOC]. | $2,602 |
| 5450-0419 | Light Whelen 12V Pioneer Plus model PFS2 flood/spot with pedestal mount. Includes switch in cab (driver and officer side facing lights switched separately). Location(s): [#LOC]. | $2,375 |
| 5450-0421 | Light Whelen 12 volt Pioneer Plus model PTP1 spot light with brow mount (EA) powder coated black. Includes switch in cab (driver and officer side facing lights switched separately). Location(s): [#LOC]. | $1,624 |
| 5450-0422 | Light Whelen Pioneer Plus model PFP1 12V with vertical bail mount powder coated black. Includes switch in cab accessible to driver (side facing lights switched seperately). Location(s): [#LOC]. | $1,393 |
| 5450-0423 | Light Whelen Pioneer model PFS2 powder coated black with PBA203 recess mount in smooth plate mounting boxes painted job (2-tone if applicable) color. Includes switch in cab (driver and officer side facing lights switched separately). Location: [#LOC]. | $2,508 |
| 5450-0424 | Light Whelen 12V Pioneer model PFS2 powder coated black with PBA203 recess mount. Includes switch in cab accessible to driver (driver and officer side facing lights switched separately). Location: [#LOC]. | $2,288 |
| 5450-0426 | Light Whelen Pioneer Plus model PCP2 120V with bail mount. Location(s): [#LOC]. | $2,082 |
| 5450-0427 | Light Whelen Pioneer Plus model PFP2AC 120V with bail mount powder coated black. Location(s): [#LOC]. | $2,343 |
| 5450-0428 | Light Whelen 12V Pioneer Plus model PFS2 flood/spot with brow mount powder coated black (EA). Includes switch in cab (driver and officer side facing lights switched separately). Location(s): [#LOC]. | $2,379 |
| 5450-0429 | Light Whelen 12V Pioneer Plus model PFS2 flood/spot with pedestal mount powder coated black. Includes switch in cab (driver and officer side facing lights switched separately). Location(s): [#LOC]. | $2,375 |
| 5450-0431 | Recess mounting for FireTech scene light. Location: [#LOC]. | $415 |
| 5450-0432 | Light Whelen Pioneer Plus model PFP1 12V w/bail mount platform mounted. Includes hardwired switch on platform console. Location(s): [#LOC]. | $1,435 |
| 5450-0435 | Light Whelen Pioneer Plus model PCP2AFSB 120VAC flood/spot with brow mount (EA). Location(s): [#LOC]. | $2,465 |
| 5460-0000 | Light tower Night Scan Powerlite NS3.0-3000M with four 750 watt 115 volt MagnaFire quartz light heads. Requires air brakes or air system and auxiliary air tank. Tower to be located [#LOC]. | $22,833 |
| 5460-0001 | Night Scan Powerlite NS3.0-4500M light tower with six 750 watt 115 volt MagnaFire quartz light heads. Control to be located next to the breaker box. Requires air brakes or air system and auxiliary air tank. Tower to be located [#LOC]. | $24,881 |
| 5460-0002 | Night Scan Powerlite NS4.5-3000M light tower with four 750 watt 115 volt MagnaFire quartz light heads. Control to be located next to the breaker box. Requires air brakes or air system and auxiliary air tank. Tower to be located [#LOC]. | $23,471 |
| 5460-0003 | Night Scan Powerlite NS4.5-4500M light tower with six 750 watt 115 volt MagnaFire quartz light heads. Control to be located next to the breaker box. Requires air brakes or air system and auxiliary air tank. Tower to be located [#LOC]. | $25,282 |
| 5460-0004 | Night Scan Powerlite NS4.5-6000A light tower with four 1500 watt 220 volt quartz light heads. Control to be located next to the breaker box. Requires air brakes or air system and auxiliary air tank. Tower to be located [#LOC]. | $22,138 |

| Item No. | Description | |
|---|---|---|
| 5460-0005 | Night Scan Powerlite NS4.5-6000OPT light tower with four 1500 watt 230 volt Optimum quartz light heads. Control to be located next to the breaker box. Requires air brakes or air system and auxiliary air tank. Tower to be located [#LOC]. | $21,839 |
| 5460-0006 | Night Scan Powerlite NS4.5-9000OPT light tower with six 1500 watt 230 volt Optimum quartz light heads. Control to be located next to the breaker box. Requires air brakes or air system and auxiliary air tank. Tower to be located [#LOC]. | $27,336 |
| 5460-0010 | Will-Burt Night Scan extension harness. Required when tower is installed on custom cab roof or more than 20' from controller location. | $1,125 |
| 5460-0011 | Night Scan Chief NS1.8-3000A light tower with two 1500 watt 230 volt quartz light heads. Control to be located next to the breaker box. Tower to be located [#LOC]. | $13,460 |
| 5460-0013 | Command Light light tower model CL 605. Includes (6) 500 watt quartz halogen lights and a green strobe. Location: [#LOC]. | $21,368 |
| 5460-0014 | Command Light light tower model CL 610. Includes (6) 650 watt quartz halogen lights and a green strobe. Location: [#LOC]. | $19,142 |
| 5460-0019 | Command Light light tower model CL 611. Includes (6) 1000 watt quartz halogen lights and a green strobe. Location: [#LOC]. | $20,631 |
| 5460-0021 | Command Light light tower model CL 615. Includes (6) 1500 watt quartz halogen lights and a green strobe. Location: [#LOC]. | $20,631 |
| 5460-0022 | Command Light Knight tower model KL450. Includes (6) 500 watt quartz halogen lights and a green strobe. Location: [#LOC]. | $14,073 |
| 5460-0024 | Command Light light tower model SL429-RT. Includes (2) 1500 watt quartz halogen lights. Control to be located next to the breaker box. Location: [#LOC]. | $9,076 |
| 5460-0025 | Night Scan Powerlite NS4.5-5400M light tower with six 900 watt 230 volt MagnaFire quartz light heads. Control to be located next to the breaker box. Requires air brakes or air system and auxiliary air tank. Tower to be located [#LOC]. | $23,736 |
| 5460-0026 | Night Scan Chief NS1.8-3000A light tower with two 1500 watt 230 volt quartz light heads. Control to be located next to the breaker box. Tower to be located [#LOC]. | $13,460 |
| 5460-0027 | Command Light tower option back lighting. | $2,111 |
| 5460-0030 | Command Light light tower model KL475HS. Includes (6) 750 watt Magnafire quartz halogen lights and a green strobe. Location: [#LOC]. | $17,371 |
| 5460-0031 | Night Scan Chief NS1.8-3000M light tower with four 750 watt 115 volt MagnaFire quartz light heads. Control to be located next to the breaker box. Tower to be located [#LOC]. | $14,792 |
| 5460-0032 | Command Light light tower model KL475HS. Includes (6) 750 watt Magnafire quartz halogen lights and a red strobe. Location: [#LOC]. | $17,371 |
| 5460-0033 | Night Scan Powerlite NS4.5-3600M light tower with four 900 watt 230 volt MagnaFire quartz light heads. Control to be located next to the breaker box. Requires air brakes or air system and auxiliary air tank. Tower to be located [#LOC]. | $20,962 |
| 5460-0034 | Command Light light tower model CL 615. Includes (4) 1500 watt quartz halogen lights (2) 1000 watt Metal Halide light heads and a green strobe. Locate [#LOC]. | $21,821 |
| 5460-0036 | Night Scan Chief NS2.3-3000M light tower with four 750 watt 115 volt MagnaFire quartz light heads. Control to be located next to the breaker box. Tower to be located [#LOC]. | $13,907 |
| 5460-0038 | Command Light light tower model CL 615. Includes (6) 1000 watt quartz halogen lights and a green strobe. Location: [#LOC]. | $20,631 |
| 5460-0040 | Night Scan Powerlite NS4.5-6000OPT light tower with four 1500 watt 230 volt Optimum quartz light heads. Light heads and base covers painted job color. Control to be located next to the breaker box. Requires air brakes or air system and auxiliary air tank. Tower to be located [#LOC]. | $25,081 |
| 5460-0043 | Night Scan Powerlite NS3.0-6000OPT light tower with four 1500 watt 230 volt Optimum quartz light heads. Control to be located next to the breaker box. Requires air brakes or air system and auxiliary air tank. Tower to be located [#LOC]. | $24,881 |
| 5460-0045 | Night Scan Powerlite NS4.5-3000M light tower with four 750 watt 115 volt MagnaFire quartz light heads. Control to be located next to the breaker box. Requires air brakes or air system and auxiliary air tank. Tower to be located [#LOC]. | $23,072 |
| 5460-0046 | Command Light light tower model KL450. Includes black powder coat finish with (6) 500 watt quartz halogen lights and a green strobe. Location: [#LOC]. | $15,389 |
| 5460-0047 | Night Scan Chief NS2.3-6000OPT light tower with four 1500 watt 230 volt FRC Optimum quartz light heads. Control to be located next to the breaker box. Tower to be located [#LOC]. | $13,918 |
| 5460-0048 | Command Light light tower model CL 615 with FRC Optimum lightheads. Includes (6) 1500 watt quartz halogen lights and an amber strobe. Location: [#LOC]. | $25,668 |

| Item No. | Description | |
|---|---|---|
| 5460-0050 | Night Scan Powerlite NS 3.0-3600M light tower with four 900 watt 230 volt MagnaFire quartz light heads. Control to be located next to the breaker box. Requires air brakes or air system and auxiliary air tank. Tower to be located [#LOC]. | $20,437 |
| 5460-0053 | Command Light light tower model CL602A with Whelen PFP2AC lightheads. Includes (6) 150 watt LED lights and an amber strobe. Location: [#LOC]. | $33,996 |
| 5460-0059 | Command Light Knight tower model KL465. Includes (6) 650 watt quartz halogen lights. Location: [#LOC]. | $14,073 |
| 5460-0064 | Night Scan Chief NS1.8-6000OPT light tower with four 1500 watt 230 volt FRC Optimum quartz light heads. Control to be located next to the breaker box. Requires air brakes or air system and auxiliary air tank. Tower to be located [#LOC]. | $14,460 |
| 5460-0065 | Night Scan Chief 1.8-3600M light tower with four 900 watt 230 volt quartz light heads. Control to be located next to the breaker box. Tower to be located [#LOC]. | $16,190 |
| 5460-0066 | Command Light light tower model CL602D with Whelen PFP2 12V lightheads. Includes (4) 150 watt LED lights and a amber strobe. Location: [#LOC]. | $28,188 |
| 5460-0067 | Night Scan Chief NS2.3-600LED Whelen light tower with (4) 150 watt 12V Whelen Pioneer PFP2 LED light heads. Control to be located next to the breaker box if equipped or the forward wall of L1 if unit has no breaker box. Tower to be located [#LOC]. | $17,784 |
| 5460-0069 | Command Light Knight tower model KL450. Includes (6) 500 watt quartz halogen lights and a amber strobe. Location: [#LOC]. | $14,073 |
| 5460-0070 | Night Scan Chief NS1.8-3000-4-MGN-110v light tower with four 750 watt 115 volt MagnaFire quartz light heads. Control to be located next to the breaker box. Tower to be located [#LOC]. | $11,461 |
| 5460-0071 | Night Scan Powerlite NS3.0-600WHL light tower with (4) 150 watt 120 volt Whelen Pioneer PFP2AC LED light heads. Control to be located next to the breaker box. Requires air brakes or air system and auxiliary air tank. Ahead of vista location requires riser. Tower to be located [#LOC]. | $31,255 |
| 5460-0072 | Night Scan Powerlite NS3.0-900WHL light tower with (6) 150 watt 120 volt Whelen Pioneer PFP2AC LED light heads. Control to be located next to the breaker box. Requires air brakes or air system and auxiliary air tank. Ahead of vista location requires riser. Tower to be located [#LOC]. | $36,970 |
| 5460-0073 | Night Scan Chief NS1.8-600WHL 120V Whelen light tower with (4) 150 watt 120 volt Whelen Pioneer PFP2AC LED light heads. Control to be located next to the breaker box. Tower to be located [#LOC]. | $26,218 |
| 5460-0074 | Night Scan Chief NS1.8-600 Whelen light tower with (4) 150 watt 12V Whelen Pioneer PFP2 LED light heads. Control to be located next to the breaker box (L1 forward wall w/o breaker box). Tower to be located [#LOC]. | $17,934 |
| 5460-0075 | Night Scan Powerlite NS4.5-900WHL light tower with (6) 150 watt 120 volt Whelen Pioneer PFP2AC LED light heads. Control to be located next to the breaker box. Requires air brakes or air system and auxiliary air tank. Tower to be located [#LOC]. | $37,835 |
| 5460-0076 | Will-Burt Night Scan Powerlite NS4.5-600WHL light tower with (4) 150 watt 120 volt Whelen Pioneer PFP2AC LED light heads. Control to be located next to the breaker box. Requires air brakes or air system and auxiliary air tank. Tower to be located [#LOC]. | $32,030 |
| 5460-0077 | Night Scan Chief NS2.3-600LED Whelen light tower with (4) 150 watt 110V Whelen Pioneer PFP2AC LED light heads. Control to be located next to the breaker box. Tower to be located [#LOC]. | $26,478 |
| 5460-0080 | Night Scan Chief NS2.3-920SPA 12V FRC light tower with (4) 230 watt 12 volt FRC Spectra LED light heads. Control to be located next to the breaker box. Tower to be located [#LOC]. | $23,861 |
| 5460-0081 | Night Scan Chief NS2.3-920SPA 120V FRC light tower with (4) 230 watt 120 volt FRC Spectra LED light heads. Control to be located next to the breaker box. Tower to be located [#LOC]. | $23,861 |
| 5460-0082 | Night Scan Powerlite NS3.0-920SPA light tower with (4) 230 watt 120 volt FRC Spectra LED light heads. Control to be located next to the breaker box. Requires air brakes or air system and auxiliary air tank. Ahead of vista location requires riser. Tower to be located [#LOC]. | $37,115 |
| 5460-0083 | Night Scan Powerlite NS3.0-1380SPA light tower with (6) 230 watt 120 volt FRC Spectra LED light heads. Control to be located next to the breaker box. Requires air brakes or air system and auxiliary air tank. Ahead of vista location requires riser. Tower to be located [#LOC]. | $42,638 |
| 5460-0085 | Night Scan Powerlite NS4.5-1380SPA light tower with (6) 230 watt 120 volt FRC Spectra LED light heads. Control to be located next to the breaker box. Requires air brakes or air system and auxiliary air tank. Tower to be located [#LOC]. | $42,927 |
| 5460-0086 | Command Light light tower model CL 607. Includes (6) 750 watt ROM Magnafire quartz halogen lights and a green strobe. Location: [#LOC]. | $25,831 |
| 5460-0087 | Command Light light tower model CL 607. Includes (6) 750 watt FRC Optimum quartz halogen lights and a green strobe. Location: [#LOC]. | $25,831 |

| Item No. | Description | |
|---|---|---|
| 5460-0089 | Command Light light tower model CL602A with FRC 120V Spectra lightheads. Includes (4) 220 watt LED lights. Location: [#LOC]. | $32,825 |
| 5460-0090 | Command Light light tower model CL602A with FRC 120V Spectra lightheads. Includes (6) 220 watt LED lights. Location: [#LOC]. | $33,996 |
| 5460-0091 | Command Light light tower model CL602D with FRC Spectra 12V lightheads. Includes (4) 220 watt LED lights. Location: [#LOC]. | $28,188 |
| 5460-0092 | Command Light light tower model KL475OPT. Includes (6) 750 watt FRC Optimum quartz halogen lights. Location: [#LOC]. | $17,036 |
| 5460-0093 | Command Light light tower model KL415A. Includes (6) 220 watt 120V FRC Spectra LED lights. Control to be located adjacent to breaker box. Location: [#LOC]. | $31,600 |
| 5460-0094 | Command Light light tower model KL415A. Includes (6) 150 watt 120V Whelen Pioneer PFP2 LED lights. Control to be located adjacent to breaker box. Location: [#LOC]. | $31,600 |
| 5460-0095 | Command Light light tower model KL415A. Includes (4) 220 watt 120V FRC Spectra LED lights. Control to be located adjacent to breaker box. Location: [#LOC]. | $25,832 |
| 5460-0096 | Command Light light tower model KL415A. Includes (4) 150 watt 120V Whelen Pioneer PFP2 LED lights. Control to be located adjacent to breaker box. Location: [#LOC]. | $25,832 |
| 5460-0097 | Command Light light tower model KL415D. Includes (4) 220 watt 12V FRC Spectra LED lights. Control to be located adjacent to breaker box. Location: [#LOC]. | $24,390 |
| 5460-0098 | Command Light light tower model KL415D. Includes (4) 150 watt 12V Whelen Pioneer PFP2 LED lights. Control to be located adjacent to breaker box if equipped or L1 forward wall in available space if not otherwise specified. Location: [#LOC]. | $24,390 |
| 5460-0100 | Command Light light tower model SL422D. Includes (2) 150 watt Whelen 12V Pioneer lights. Control to be located next to the breaker box. Location: [#LOC]. | $12,564 |
| 5460-0101 | Command Light light tower model CL602A-2MH. Includes (4) 110V 220 watt FRC Spectra LED lights and (2) 230V 1000W metal halide lights. Location: [#LOC]. | $35,710 |
| 5460-0102 | Night Scan Chief NS1.8-3000OPT light tower with four 750 watt FRC Optimum quartz light heads. Control to be located next to the breaker box. Tower to be located on [#LOC]. | $14,223 |
| 5460-0103 | Night Scan Powerlite NS3.0-900WHL light tower with (6) 150 watt 120 volt Whelen Pioneer PFP2AC LED light heads. Control to be located next to the breaker box. Requires air brakes or air system and auxiliary air tank. Tower to be located rearward on flat roof (non vista) and mounted side to side and hinged to driver. Placement to allow 45 degree shield to be placed in normal vista rise locations to allow cab to appear to have vista roof. | $36,970 |
| 5460-0106 | Strobe light for Command Light tower. Color: [#COL]. | $364 |
| 5460-0111 | Command Light light tower model CL 609. Includes (6) 900 watt ROM Magnafire quartz halogen lights and a green strobe. Location: [#LOC]. | $26,083 |
| 5460-0113 | Command Light light tower model KL475. Includes (6) 750 watt Magnafire quartz halogen lights. Location: [#LOC]. | $17,036 |
| 5460-0114 | Night Scan Chief NS1.8-300LED Whelen light tower with (2) 150 watt 12 volt Whelen Pioneer PFP2 LED light heads. Control to be located adjacent to breaker box. Tower to be located [#LOC]. | $14,174 |
| 5460-0116 | Night Scan Powerlite NS4.5-2100SPA light tower with (6) 350 watt 120 volt FRC Spectra LED light heads. Control to be located next to the breaker box. Requires air brakes or air system and auxiliary air tank. Tower to be located [#LOC]. | $44,105 |
| 5460-0118 | Command Light light tower model SL447-RT. Includes (4) 750 watt 120V FRC Optimum quartz halogen lights. Control to be located next to the breaker box. Location: [#LOC]. | $10,787 |
| 5460-0120 | Command Light light tower model CL602D with FRC Spectra 12V lightheads. Includes (4) 220 watt LED lights. Tower and lightheads powder coated black. Location: [#LOC]. | $30,878 |
| 5460-0121 | Night Scan Chief NS2.3-500-4 LED light tower with (4) 125 watt 12V Will-burt XL 160 LED light heads. Control to be located next to the breaker box if equipped or the forward wall of L1 if unit has no breaker box. Tower to be located [#LOC]. | $17,368 |
| 5460-0122 | Command Light light tower model CL615-4HM. Includes (2) 1500 watt quartz halogen lights and (4) 1000 watt Metal Halide light heads. Locate [#LOC]. | $27,732 |
| 5460-0123 | Night Scan Chief NS2.3-460SPC light tower with (2) 230 watt 120 volt FRC Spectra LED light heads and a Sidewider standard defenition analog camera system. Tower control to be located next to the breaker box. Camera system controls located on interior desk area. Tower to be located [#LOC]. | $31,960 |
| 5460-0124 | Command Light light tower model SL442D-FS. Includes (4) 230 watt FRC 12V Spectra lights. Control to be located next to the breaker box or L1 if not equipped. Location: [#LOC]. | $19,219 |
| 5460-0125 | Command Light tower powder coat color in place of standard. Color: [#COL]. | $1,329 |
| 5460-0126 | Command Light light tower model KL415A-FX. Includes (6) 335 watt 120V FRC Spectra Max LED lights. Control to be located adjacent to breaker box. Location: [#LOC]. | $32,869 |

| Item No. | Description | |
|---|---|---|
| 5460-0128 | Will-Burt light tower black in place of standard. Includes covers mast and lights. | $1,958 |
| 5470-0000 | Receptacle twist lock 15A/110V 3 wire NEMA L5-15 with cover plate. Location: [#LOC]. | $319 |
| 5470-0001 | Receptacle twist lock 20A/110V 3 wire NEMA L5-20 with cover plate. Location: [#LOC]. | $333 |
| 5470-0002 | Receptacle twist lock 30A/110V 3 wire NEMA L5-30 with cover plate. Location: [#LOC]. | $358 |
| 5470-0004 | Receptacle household 20A/110V duplex 3-prong NEMA 5-20 with cover plate interior mounted wired to inlet receptacle. Location: [#LOC]. | $314 |
| 5470-0005 | Receptacle household 15A/110V Daniel Woodhead duplex 3 wire NEMA 5-15 w/Daniel Woodhead cover plate. Location: [#LOC] | $579 |
| 5470-0006 | Receptacle twist lock 15A/110V Daniel Woodhead 3 wire NEMA L5-15 w/Daniel Woodhead cover plate. Location: [#LOC] | $520 |
| 5470-0007 | Receptacle twist lock 15A/220V Daniel Woodhead 3 wire NEMA L6-15 w/Daniel Woodhead cover plate. Location: [#LOC] | $657 |
| 5470-0008 | Receptacle twist lock 20A/110V Daniel Woodhead 3 wire NEMA L5-20 w/Daniel Woodhead cover plate. Location: [#LOC]. | $536 |
| 5470-0009 | Receptacle twist lock 20A/220V Daniel Woodhead 3 wire NEMA L6-20 w/Daniel Woodhead cover plate. Location: [#LOC] | $708 |
| 5470-0010 | Receptacle twist lock 20A 110V/220V Daniel Woodhead 4 wire NEMA L14-20 w/Daniel Woodhead cover plate. Location: [#LOC] | $734 |
| 5470-0011 | Receptacle twist lock 15A/220V 3 wire NEMA L6-15 with cover plate. Location: [#LOC] | $464 |
| 5470-0012 | Receptacle twist lock 20A/220V 3 wire NEMA L6-20 with cover plate. Location: [#LOC]. | $464 |
| 5470-0013 | Receptacle twist lock 20A 110V/220V 4 wire NEMA L14-20 with cover plate. Location: [#LOC]. | $631 |
| 5470-0014 | Receptacle twist lock 30A/220V 3 wire NEMA L6-30 with cover plate. Location: [#LOC]. | $631 |
| 5470-0015 | Receptacle twist lock 30A 110V/220V 4 wire NEMA L14-30 with cover plate. Location: [#LOC] | $625 |
| 5470-0016 | Receptacle shoreline 30A/110V with auto transfer switch. The receptacle shall be located [#LOC]. | $1,068 |
| 5470-0017 | Receptacle household 20A/110V duplex 3-prong NEMA 5-20 with cover plate. Location: [#LOC]. | $303 |
| 5470-0018 | Receptacle shoreline 50A/220V with auto transfer switch. The receptacle shall be located [#LOC]. | $1,077 |
| 5470-0019 | Receptacle FirePower 20A/110V model FP-11 with cover plate. Location: [#LOC]. | $368 |
| 5470-0020 | Receptacle 12V military with A pin Positive B pin Negative C pin Blank. Location: [#LOC] | $252 |
| 5470-0021 | 12 volt power point wired battery hot. Location [#LOC] | $61 |
| 5470-0024 | Receptacle 15A/110V duplex with (1) 3-prong NEMA 5-15 and (1) twist lock NEMA L5-15 with cover plate. Location: [#LOC]. | $340 |
| 5470-0025 | Receptacle household 30A/110V 3-prong NEMA 5-30 with cover plate. Location: [#LOC] | $347 |
| 5470-0026 | Receptacle household 15A/110V duplex 3-prong NEMA 5-15 with cover plate interior mounted wired to inlet receptacle. Location: [#LOC]. | $291 |
| 5470-0027 | Household switch with weaterproof cover located near receptacle at [#LOC]. Switch to operate single leg of this duplex receptacle. | $523 |
| 5470-0028 | Receptacle household 20A/110V Daniel Woodhead duplex 3 wire NEMA 5-20 w/Daniel Woodhead cover plate. Location: [#LOC]. | $595 |
| 5470-0029 | Receptacle Hubbell twist lock 20A 110V/250V 3 wire NON-NEMA with cover plate. Location: [#LOC]. | $396 |
| 5470-0030 | Receptacle twist lock 15A/110V 3 wire NEMA L5-15 with yellow Daniel Woodhead cover plate. Location: [#LOC]. | $389 |
| 5470-0031 | Receptacle twist lock 15A/110V duplex 3 wire NEMA L5-15 with yellow Daniel Woodhead cover plate. Location: [#LOC]. Top duplex will be hooked to toogle switch next to it. | $657 |
| 5470-0032 | Receptacle 12V Marinco model 2018BR with model 2018MB cover wired battery hot. Includes model 2018BP male connector. Location: [#LOC]. | $440 |
| 5470-0034 | Receptacle shoreline 50A/220V. The receptacle shall be located [#LOC]. No additional breaker box is included in this code. | $289 |
| 5470-0036 | 9 outlet Stanley model 31610 household 15A/110V power strip wired to inlet receptacle. Location: [#LOC]. | $189 |
| 5470-0039 | Receptacle NON-NEMA locking 20A 120V/250V Daniel Woodhead model 67W08 w/Daniel Woodhead cover plate. Location: [#LOC]. | $734 |
| 5470-0040 | Receptacle twist lock 50A/220V 3 wire NEMA L6-50 with cover plate. Location: [#LOC]. | $767 |
| 5470-0041 | Receptacle household 15A/110V duplex 3-prong NEMA 5-15 with cover plate interior mounted wired to inlet receptacle. Location: R1 forward wall 24" up. | $291 |
| 5470-0042 | Auto-Eject receptacle inlet 30 amp 120 volt with auto transfer switch. The receptacle shall be located [#LOC] and with a [#COL] cover. | $1,552 |
| 5470-0048 | Service 30A/220V 4 wire with junction box. Location: [#LOC]. | $488 |
| 5470-0049 | Receptacle household 15A/110V double gang (four outlets) 3-prong NEMA 5-15 with cover plate interior mounted wired to inlet receptacle. Location:[#LOC]. | $579 |

| Item No. | Description | |
|---|---|---|
| 5470-0051 | 6 outlet household 20A/110V power strip wired to inlet receptacle. Location: [#LOC]. | $218 |
| 5470-0053 | Receptacle inlet 110 VAC L5-30 Amp twist lock with a [#COL] cover. Location: [#LOC]. | $292 |
| 5470-0054 | Receptacle household 15A/110V duplex 3-prong NEMA 5-15 with cover plate interior mounted wired to generator (not wired to inlet/shoreline). Location: [#LOC]. | $291 |
| 5470-0055 | Receptacle household 15A/110V duplex 3-prong NEMA 5-15 with cover plate. This receptacle shall be GFCI protected and have a push button reset on the receptacle. Location: [#LOC]. | $316 |
| 5470-0057 | Receptacle household 20A/110V duplex 3-prong NEMA 5-20 with cover plate interior mounted wired to generator (not wired to inlet/shoreline). Location: [#LOC]. | $303 |
| 5470-0060 | Receptacles household 15A/110V duplex 3-prong NEMA 5-15 and 20A/110V twist lock receptacle NEMA L5-20 with cover plates. The receptacles shall be GFCI protected. The 5-15 receptacle shall have a push button reset on the receptacle the L5-20 shall be GFCI protected at the breaker. Location: (1) set of (2) 5-15 and (1) L5-20 GFCI receptacles each side in cab wheel well area. | $812 |
| 5470-0061 | Grainger model 2MV42; 6 outlet household 15A/110V power strip wired to inlet receptacle. Location: [#LOC]. | $342 |
| 5470-0066 | 12 volt power point wired battery hot. Location: in rear walkin body on forward wall above desk driver side. | $61 |
| 5470-0067 | 12 volt power point wired battery hot. Location: Inside walkin body compartment DS2 low on back wall as far forward as posable. REF customer drawing | $61 |
| 5470-0068 | 12 volt power point wired battery hot. Location: Inside walkin body compartment OS2 low on back wall as far forward as posable. REF customer drawing | $61 |
| 5470-0071 | Receptacle household 15A/110V duplex 3-prong NEMA 5-15 with cover plate interior mounted wired to inlet receptacle and shall include as part of the receptacle 15 amp over current protection. This receptacle shall be GFCI protected and have a push button reset on the receptacle. Location: [#LOC]. | $344 |
| 5470-0072 | Each receptacle shall be labeled to identify the power source (Shoreline Generator). | $126 |
| 5470-0075 | Receptacle household 30A/220V 3 wire NEMA 6-30 with cover plate. Location: [#LOC]. | $631 |
| 5470-0076 | Receptacle Hubbell twist lock 15A/110V 3 wire NEMA L5-15 with cover plate. Location: [#LOC]. | $396 |
| 5470-0077 | Receptacle Hubbell twist lock 20A/250V 4 wire NEMA L15-20 with cover plate. Location: [#LOC]. | $396 |
| 5470-0080 | Receptacle; Schuko 250V model 70310 with weatherproof cap. Location: [#LOC]. | $464 |
| 5470-0081 | Receptacle household 20A/110V duplex 3-prong NEMA 5-20 with cover plate exterior mounted wired to inlet receptacle. Location: [#LOC]. | $314 |
| 5470-0082 | Receptacle 20A/220V 3 wire NEMA 6-20 with cover plate wired to inlet receptacle. Location: [#LOC]. | $464 |
| 5470-0084 | Receptacle household 20A/110V double gang (four outlets) 3-prong NEMA 5-20 with cover plate interior mounted wired to inlet receptacle. Location: [#LOC]. | $612 |
| 5500-0003 | Code3 V-con #3692 siren on cab dash. | $667 |
| 5500-0004 | Code3 V-Con #3692 siren recessed mounted. | $769 |
| 5500-0005 | Federal Signal electronic EQ2B-EF siren. Includes 200 watt speaker with square "E-ONE" grille. Speaker location: [#LOC]. | $3,872 |
| 5500-0006 | Federal electronic e-Q2B siren. Includes "Q" grille. Speaker location: [#LOC]. | $4,389 |
| 5500-0007 | Federal MS4000 siren recessed mounted. | $874 |
| 5500-0009 | Federal PA300 electronic siren recessed mounted. | $722 |
| 5500-0010 | Federal Q2B siren - flush mounted in bumper. Location: [#LOC]. | $3,084 |
| 5500-0011 | Federal Q2B siren - Pedestal mounted on bumper. Location: [#LOC]. | $2,779 |
| 5500-0012 | Prewire for Federal Q2B mechanincal siren. Driver side front bumper. | $288 |
| 5500-0014 | Unitrol #480K siren. | $1,644 |
| 5500-0015 | Whelen model 295SLSA1 siren with microphone (replaced 295HFSA1). | $958 |
| 5500-0016 | Code 3 V-Con #3672 siren recessed mounted. | $769 |
| 5500-0017 | Whelen model 295HFSM1 siren with mechanical siren tone and microphone. N/A in California. | $1,052 |
| 5500-0019 | Code 3 #3997 siren. Requires (1) 200 watt or (2) 100 watt speakers. | $1,766 |
| 5500-0020 | Federal PA4000 siren recessed mounted. Includes horn ring select switch (Tap II / DOT / electronic air horn sound) on face of siren. Note: Switch will be non-functional when E-ONE installed horn ring select switch is supplied. | $771 |
| 5500-0022 | Federal PA300 siren mounted on electrical access panel between the driver and officer front seats. | $722 |
| 5500-0023 | Unitrol model UTM1 siren with option to disable Hi/Low feature (UOP09). Route radio re-broadcast cable to officer side overhead for OCFA radio installation. | $770 |
| 5500-0027 | Signal Vehicle Products model SS741MG siren recessed mounted. | $608 |

| Item No. | Description | |
|---|---|---|
| 5500-0028 | Integrated Siren System with dual control heads separate PA controls with remote mircrophone and volume switch. | $883 |
| 5500-0030 | Code 3 #3997R siren. Requires (1) 200 watt or (2) 100 watt speakers. | $1,766 |
| 5500-0031 | Whelen model 295HFSA7 siren with microphone. | $1,498 |
| 5500-0032 | Federal / Unitrol #U480K-4 siren. | $1,587 |
| 5500-0034 | Federal Rumbler secondary siren. Includes amp timer and two speakers mounted under vehicle. Requires control switch. | $1,263 |
| 5500-0036 | Whelen model 295HFSC9 siren with microphone. N/A in California. | $1,203 |
| 5500-0037 | Federal PA300 siren recessed mounted. Microphone to be removed and a plug is to be installed in the wiring hole. | $722 |
| 5500-0038 | Federal / Unitrol #UTM4 siren. | $1,604 |
| 5500-0040 | Powercall DX5200 siren control. For use with (1) 200 watt speaker or up to (2) 100W speakers. | $963 |
| 5500-0041 | Federal electronic Q2B-EF siren. Includes two (2) ES100 speakers with square "E-ONE" grilles. Speaker location: [#LOC]. | $4,006 |
| 5500-0044 | Whelen model 295HFSA7 siren with microphone. Microphone to be removed (shipped loose) and a plug is to be installed in the wiring hole. | $1,498 |
| 5500-0045 | Whelen model 295SLSC1 siren with plug-in microphone. N/A in California. | $958 |
| 5500-0048 | Federal PA300 100W siren recessed mounted. | $677 |
| 5500-0049 | Whelen Howler secondary siren. Includes amp timer and two speakers mounted under vehicle. | $1,278 |
| 5500-0051 | Federal PA300R siren with single control. PA control and volume switch located on electrical access panel. | $868 |
| 5500-0052 | Federal PA640 electronic siren recessed mounted. | $722 |
| 5500-0054 | Federal / Unitrol #UTM1 siren. | $1,160 |
| 5500-0059 | Whelen model 295SL100 siren with microphone (replaced 295HF100). | $904 |
| 5500-0060 | Whelen Howler secondary siren. Includes amp timer and two speakers mounted under gravelshield. | $1,278 |
| 5500-0063 | Federal electronic Q2B-EF siren. Includes two ES100 speakers. Speaker location: [#LOC]. | $4,006 |
| 5500-0066 | Whelen model 295SLSA1 siren without microphone. | $958 |
| 5500-0067 | Whelen model 295SLSC1 siren without microphone. N/A in California. | $958 |
| 5500-0068 | Pre-wire for Tomar Emitter. Coil 4' of wire in driver's overhead panel. | $288 |
| 5500-0069 | Prewire for Federal Q2B mechanincal siren. Officer side front bumper. | $288 |
| 5500-0070 | Federal Signal electronic EQ2B-EF siren. Includes 200 watt speaker with "EF" grille. Speaker location: [#LOC]. | $3,872 |
| 5500-0072 | Powercall X71 siren control. For use with (1) 100W speaker. Locate switch on officer side switch panel. | $610 |
| 5500-0074 | Whelen model 295HFS2 siren with flush mount siren head remote amplifier and microphone. N/A in California. | $1,102 |
| 5500-0075 | Carson SA-400M siren recessed mounted. | $1,188 |
| 5500-0076 | Federal Q2B siren - flush mounted in bumper. Incudes diamond plate housing for siren to space outward to clear in bumper options. Location: center front bumper. | $3,274 |
| 5500-0080 | Federal Q2B siren - Recess mounted in bumper. Front of grille behind circular bumper cut-out. Requires 12" heavy duty bumper. Location: [#LOC]. | $3,640 |
| 5500-0081 | Powercall 6 Adam siren. For use with (1) 200 watt speaker or (2) 100W speakers. | $940 |
| 5500-0083 | Carson SA-441M remote siren. | $1,448 |
| 5500-0084 | Whelen Alpha12S siren located [#LOC] with a Federal Signal ES100 speaker located on the driver side rear of body. | $1,324 |
| 5500-0085 | Screaming Eagle nesting eagle mount siren in bumper. Location: [#LOC]. | $3,512 |
| 5510-0002 | Speaker Federal BP200 mounted through bumper. Location: [#LOC]. | $1,208 |
| 5510-0003 | Speaker Federal CP100S pedestal mounted. Location: [#LOC]. | $789 |
| 5510-0006 | Speaker Federal ES100-MSBMT. Location: [#LOC]. | $469 |
| 5510-0007 | Speaker Cast Products SA2401 100W thru bumper. Location: [#LOC]. | $527 |
| 5510-0008 | Speaker Cast Products SA3501 100W through bumper. Location: [#LOC]. | $584 |
| 5510-0009 | Federal TS100-N speaker mounted on pump panel. | $477 |
| 5510-0012 | Speaker Federal TS100 through bumper with E-ONE grille. Location: [#LOC]. | $560 |
| 5510-0013 | Speaker Federal Dynamax MS100-EF thru bumper. Location: [#LOC]. | $560 |
| 5510-0016 | Code 3 PB100C electronic siren speaker recessed in front bumper. Location: [#LOC]. | $549 |
| 5510-0017 | Speaker Cast Products SA2403 100W thru bumper. Location: [#LOC]. | $527 |
| 5510-0019 | University Sound speaker model MIS8C with seperate on / off switch. Locate on driver side upper module area with wire terminating in the center overhead console. | $353 |
| 5510-0021 | Speaker Federal TS100-N mounted on driver side front compartment face. | $477 |

| Item No. | Description | |
|---|---|---|
| 5510-0023 | Speaker Atkinson Dynamics (Federal) mounted on pump panel. | $642 |
| 5510-0026 | Code 3 FM100C electronic siren speaker recessed in front bumper. Location: [#LOC]. | $633 |
| 5510-0027 | Speaker volume control on pump panel for pump panel mtd speaker. Locate next to speaker. Includes 16-18 gauge audio cable run from volume control to center overhead area leave a 30" coil of wire. | $455 |
| 5510-0029 | Speaker Federal Signal Dynamax ES100 with "E-ONE" grille through bumper. Location: [#LOC]. | $560 |
| 5510-0031 | Whelen SA314P electronic siren speaker recessed in front bumper with polished trim ring. Location: [#LOC]. | $780 |
| 5510-0041 | Speaker Federal Signal Dynamax ES100. Location: [#LOC]. | $560 |
| 5510-0042 | Speaker Atkinson Dynamics (Federal) model AD-SF-25 flush mounted with volume controls. Location: [#LOC]. | $709 |
| 5510-0045 | Speaker Federal Signal Dynamax ES100 with "E-ONE" grille. Location: [#LOC]. | $560 |
| 5510-0046 | Speaker Federal BP100 mounted through bumper. Location: [#LOC]. | $767 |
| 5510-0047 | Speakers (Pair) Federal Signal Dynamax ES100 through bumper with smooth plate grille painted same color as the heavy duty bumper and sufficient surface area for lettering. Locate both speakers next to each other center of the bumper with one common grill covering them. | $1,326 |
| 5510-0049 | Whelen SP123BMC electronic siren speaker recessed in front bumper. Location: [#LOC]. | $580 |
| 5510-0050 | Speaker PowerCall Feniex with "E-ONE" grille through bumper. Location: [#LOC]. | $396 |
| 5550-0006 | Whelen LED 6/2/2 lower level warning light package. Includes (6) 600 series (2) 400 series and (2) 500 series light heads w/weatherproof connectors. Locate side facing lights: [#LOC]. | $3,320 |
| 5550-0007 | Whelen LED 8/2 lower level warning light package. Includes (8) 600 series and (2) 500 series light heads w/weatherproof connectors. Locate side facing lights: [#LOC]. | $3,576 |
| 5550-0008 | Whelen strobe/LED 6/2/2 lower level warning light package. Includes (6) 600 series strobes (2) 400 series strobes and (2) 500 series LED light heads w/weatherproof connectors and required power supplies. Locate side facing lights: [#LOC]. | $3,204 |
| 5550-0010 | Whelen 600 series LED lower level warning light package. Includes (10) LED light heads w/weatherproof connectors. Locate side facing lights: [#LOC]. | $3,933 |
| 5550-0012 | Whelen 600 series strobe lower level warning light package. Includes (10) strobe lights w/weatherproof connectors and required power supplies. Locate side facing lights: [#LOC]. | $3,701 |
| 5550-0013 | Federal Signal strobe/halogen lower level warning light package. Includes (8) strobe (2) GH1F halogen lts and required power supplies. Locate side facing lights: [#LOC]. | $3,123 |
| 5550-0014 | Federal Signal GS5 strobe lower level warning light package. Includes (10) Lights and required power supplies. Locate side facing lights: [#LOC]. | $3,564 |
| 5550-0021 | Federal Signal GL5 LED lower level warning light package. Includes Ten (10) GL5-R lights. Locate side facing lights: [#LOC]. | $2,852 |
| 5550-0028 | Code3 strobe/halogen 6/4 lower level warning light package. Includes (6) 40 series strobe lights and (4) OL135 halogen lights and required power supplies. Locate side facing lights: [#LOC]. | $4,824 |
| 5550-0029 | Code3 halogen 4/6 lower level warning light package. Includes Includes (6) 41 series and (4) OL135 halogen lights. Locate side facing lights: [#LOC]. | $2,424 |
| 5550-0030 | Code3 model 65 red LED lower level warning light package. Includes (10) LED lights. Locate side facing lights: [#LOC]. | $4,156 |
| 5550-0049 | Code3 LED 6/2/2 lower level warning light package. Includes (8) model 65 red LED and (2) LXEX1F-R LED lights. Includes chrome bezels where applicable. Locate side facing lights: [#LOC]. | $3,288 |
| 5550-0052 | Flash rate for Federal LED lower level warning lights to be set at pattern 2 (102 TFPM). | $93 |
| 5550-0053 | Flash rate for Federal LED lower level warning lights to be set at pattern 8 (150 FPM). | $93 |
| 5550-0054 | Whelen 600 series Super LED lower level warning light package. Includes (10) red LED light heads w/chrome flanges. Locate side facing lights: [#LOC]. | $3,122 |
| 5550-0055 | Federal Signal QuadraFlare LED lower level warning light package. Includes (10) QL64XF-R LED light heads with bezels. Locate side facing lights: [#LOC]. | $2,611 |
| 5550-0059 | Whelen Super LED lower level warning light package. Includes (8) red 600 LED light heads and (2) red 500 LED light heads w/chrome flanges. Locate side facing lights: [#LOC]. | $2,950 |
| 5550-0067 | Flash rate for Federal QuadraFlare LED lower level warning lights to be set at pattern 4 (75 QFPM). | $93 |
| 5550-0069 | Flash rate for Federal QuadraFlare LED lower level warning lights to be set at pattern 5 (150 DFPM). | $93 |
| 5550-0072 | Whelen 600 series Super LED lower level warning light package. Includes (8) red/amber and (2) red LED light heads w/chrome flanges. Locate side facing lights: [#LOC]. | $3,519 |
| 5550-0073 | Whelen Super LED lower level warning light package. Includes (8) 600 Super LED light heads and (2) 900 Super LED light heads w/chrome flanges where applicable. Locate side facing lights: [#LOC]. | $3,436 |

| Item No. | Description | |
|---|---|---|
| 5550-0091 | Whelen strobe/LED 6/2/2 lower level warning light package. Includes (6) 600 series strobes (2) 700 series strobes and (2) 500 series LED light heads w/weatherproof connectors and required power supplies. Locate side facing lights: [#LOC]. | $3,275 |
| 5550-0092 | Whelen strobe/LED 6/2/2 lower level warning light package. Includes (6) 600 series super LED (2) 700 series split lens strobes and (2) 500 series super LED light heads w/weatherproof connectors and required power supplies. Locate side facing lights: [#LOC] | $3,734 |
| 5550-0093 | Whelen Super LED lower level warning light package. Includes (6) 600 LED red light heads (2) 400 LED red light heads and (2) 500 red LED light heads w/chrome flanges. Locate side facing lights: [#LOC] | $2,815 |
| 5550-0094 | Federal Signal strobe lower level warning light package. Includes (8) GS5 strobes and (2) GS2 strobes lts. All lenses to be blue except mid-body which are red. Locate side facing lights: [#LOC] | $3,564 |
| 5550-0095 | Whelen Super LED lower level warning light package. Includes (7) 600 red LED light heads and (3) 600 blue LED light head w/chrome flanges. Locate side facing lights: [#LOC] | $3,122 |
| 5550-0096 | Weldon Diamondback V46 LED lower level warning light package. Includes (10) red LED light heads w/chrome flanges. Locate side facing lights: [#LOC]. | $3,171 |
| 5550-0097 | Whelen 400 series linear Super LED lower level warning light package. Includes (10) red LED light heads w/chrome flanges. Locate side facing lights: [#LOC]. | $4,774 |
| 5550-0099 | Whelen Super LED lower level warning light package. Includes (4) red 600 LED light heads (4) red/clear 600 split LED light heads and (2) red 500 LED light heads w/chrome flanges. Locate side facing lights: [#LOC]. | $3,921 |
| 5550-0104 | Whelen 600 series Super LED lower level warning light package. Includes (8) red and (2) red/white LED light heads w/chrome flanges. Locate side facing lights: [#LOC]. | $3,642 |
| 5550-0106 | Whelen Super LED lower level warning light package. Includes (6) 600 red LED light heads (2) 400 amber LED light heads and (2) 500 red LED light heads w/chrome flanges. Locate side facing lights: [#LOC]. | $2,815 |
| 5550-0109 | Federal Signal QuadraFlare LED lower level warning light package. Includes (5) QL64XF-R LED light heads with bezels and (5) QL64XF-B LED light heads with bezels. Lights to alternate red/blue around unit; see specificaton. Locate side facing lights: [#LOC]. | $2,611 |
| 5550-0110 | Whelen Super LED lower level warning light package. Includes (4) red 600 LED light heads (4) blue 600 LED light heads (1) red 500 LED light head and (1) blue 500 LED light head. LIghts to alternate red/blue around unit; see specification. Locate side facing lights: [#LOC]. | $2,950 |
| 5550-0114 | Weldon Diamondback V46 LED lower level warning light package. Includes (10) red LED light heads w/clear lenses and chrome flanges. Locate side facing lights: [#LOC]. | $3,171 |
| 5550-0117 | Whelen Super LED lower level warning light package. Includes (6) 600 Super LED light heads (2 red forward/2 red rearward/2 amber rearward) and (6) side facing 500 Super LED red light heads w/chrome flanges where applicable. Requires additional side facing lights midship to meet blocking mode. Locate side facing lights: [#LOC]. | $4,024 |
| 5550-0123 | Whelen M6 Super LED lower level warning light package. Includes (8) red M6R LED light heads and (2) red 500 Super LED light heads w/chrome flanges. Locate side facing lights: [#LOC]. | $3,286 |
| 5550-0125 | Whelen M6RC Super LED lower level warning light package. Includes (8) red M6RC LED light heads and (2) red 500 Super LED light heads w/chrome flanges and clear lenses. Locate side facing lights: [#LOC]. | $3,286 |
| 5550-0127 | Federal Signal QuadraFlare LED lower level warning light package. Includes (10) QL64XFC-R LED light heads with clear lenses and bezels. Locate side facing lights: [#LOC]. | $2,611 |
| 5550-0129 | Whelen 600 series Super LED lower level warning light package. Includes (5) red LED light heads w/chrome flanges and (5) blue LED light heads w/chrome flanges. LIghts to alternate red/blue around unit; see specification. Locate side facing lights: [#LOC]. | $3,122 |
| 5550-0130 | Weldon Diamondback V46W-C/V26W-C LED lower level warning light package. Includes (8) red V46 LED light heads w/clear lenses and (2) red V26 LED light heads w/clear lenses. Locate side facing lights: [#LOC]. | $3,062 |
| 5550-0131 | Whelen Super LED lower level warning light package. Includes (8) 600 LED light heads (7 red1 blue rear facing officer side) and (2) red 500 LED light heads w/chrome flanges. Locate side facing lights: [#LOC]. | $2,950 |
| 5550-0132 | Whelen Super LED lower level warning light package. Includes (8) red 600 LED light heads and (2) red TIR3 LED light heads grommet mounted. Locate side facing lights: [#LOC]. | $2,810 |
| 5550-0133 | Whelen 500 Series Super LED upper level rear warning light package. Includes (4) red Whelen 500 Super LED TIR6 lights with chrome bezels and clear lenses. Includes weatherproof connectors. Locate (1) rear facing each side up high (1) side facing each side up high rearward on the body. | $1,028 |

| Item No. | Description | |
|---|---|---|
| 5550-0135 | Whelen Super LED lower level warning light package with clear lenses. Includes (6) red 600 LED light heads (2) red/clear 600 split LED light heads (side facing forward position) and (2) red 500 LED light heads w/chrome flanges. Locate side facing lights: [#LOC]. | $3,624 |
| 5550-0148 | Whelen M6 Super LED lower level warning light package. Includes (6) red M6RC LED light heads with clear lenses and chrome flanges (4) split red/clear M6D light heads with clear lenses and chrome flanges. See specifications for locations of split lights. Locate side facing lights: [#LOC]. | $3,753 |
| 5550-0149 | Whelen M6 Super LED lower level warning light package. Includes (10) red M6R LED light heads w/chrome flanges. Locate side facing lights: [#LOC]. | $3,702 |
| 5550-0152 | Federal Signal QuadraFlare LED lower level warning light package. Includes (8) QL64XF-R red LED light heads with bezels and (2) forward facing QL64SFC-RC split red/clear LED light heads with bezels. Locate side facing lights: [#LOC]. | $2,709 |
| 5550-0154 | Whelen M6 Super LED lower level warning light package. Includes (1) red M6RC LED light head with clear lens and chrome flange (1) blue M6BC with clear lens and chrome flange and (8) split red/clear M6D light heads with clear lenses and chrome flanges. Locate side facing lights: [#LOC]. | $4,018 |
| 5550-0155 | Whelen Super LED lower level warning light package with clear lenses. Includes (8) 600 LED light heads (6 red2 blue; (1) forward and (1) rearward facing officer side) and (2) red 500 LED light heads w/chrome flanges. Locate side facing lights: [#LOC]. | $2,950 |
| 5550-0158 | Federal Signal Viper EXT LED upper level rear warning light package. Includes (9) Viper EXT red LEDs; (5) center upper body rear facing (2) driver upper body corner side facing and (2) officer upper body corner side facing. | $1,938 |
| 5550-0159 | Whelen M6 Super LED lower level warning light package. Includes (6) M6RC red LED light heads with clear lenses (2) M9RC red LED light heads with clear lenses and (2) red 500 Super LED light heads w/chrome flanges and clear lenses. Locate side facing lights: [#LOC]. | $4,223 |
| 5550-0163 | Whelen M6 Super LED lower level warning light package. Includes (8) red/blue M6J LED light heads and (2) red/blue 500 Super LED light heads w/chrome flanges and clear lenses. Locate side facing lights: at forward most position in rear wheelwell offset to front and side facing at rear of body in rubrail if equipped. | $3,655 |
| 5550-0164 | Whelen 600 series Super LED lower level warning light package. Includes (10) red LED light heads w/clear lenses and chrome flanges. Locate side facing lights: [#LOC]. | $3,122 |
| 5550-0169 | Federal Signal QuadraFlare LED lower level warning light package. Includes (10) QL64XF-B blue LED light heads with bezels. Locate side facing lights: [#LOC]. | $2,611 |
| 5550-0170 | Whelen Super LED lower level warning light package. Includes (8) 600 Series (4) red & (4) blue (2) 400 Series (1) red & (1) blue and chrome flanges alternating in colors. Locate side facing lights: at forward most position in rear wheelwell offset to front and on tailboard mounted light box above rear tailboard. Lights will alternate color from light to light. All lights will have clear lenses with colored LEDs. | $3,122 |
| 5550-0171 | Whelen Super LED lower level warning light package. Includes (4) red 600 LED light heads (4) blue 600 LED light heads (1) red 500 LED light head and (1) blue 500 LED light head. Lights to be driver side red officer side blue; see specification. Locate side facing lights: [#LOC]. | $2,950 |
| 5550-0173 | Whelen M6 Super LED lower level warning light package. Includes (8) red M6R LED light heads and (2) red M2R LED light heads. Locate side facing lights: [#LOC]. | $3,286 |
| 5550-0178 | Whelen Super LED lower level warning light package with clear lens. Includes (8) red 600 LED light heads and (2) red 500 LED light heads w/chrome flanges. Locate side facing lights: [#LOC]. | $2,950 |
| 5550-0180 | Whelen M6 Super LED lower level warning light package. Includes (10) red M6 LED light heads w/clear lenses and chrome flanges. Locate side facing lights: [#LOC]. | $3,702 |
| 5550-0181 | Whelen Super LED lower level warning light package with clear lenses. Includes (8) red/clear M6 split LED light heads and (2) split red/clear M2 LED light heads w/chrome flanges. State of Maryland only. Locate side facing lights: [#LOC]. | $4,053 |
| 5550-0188 | Whelen M6 Super LED lower level warning light package. Includes (6) red M6R and (4) blue M6B LED light heads w/chrome flanges. See specifications for color locations. Locate side facing lights: [#LOC]. | $3,702 |
| 5550-0189 | Whelen Super LED lower level warning light package. Includes (7) red 600 LED light heads (1) blue 600 LED light heads and (2) red 500 LED light heads. Locate side facing lights: [#LOC]. | $2,950 |
| 5550-0190 | Federal Signal QuadraFlare LED lower level warning light package. Includes (5) QL64XF-R LED light heads with bezels and (5) QL64XF-B LED light heads with bezels. Lights to alternate red/blue around unit; see specificaton. Locate side facing lights: [#LOC]. | $2,611 |

| Item No. | Description | |
|---|---|---|
| 5550-0191 | Weldon Diamondback V46/V79 LED lower level warning light package. Includes (8) red V46 LED light heads w/clear lenses and (2) red V79 LED light heads w/clear lenses. Locate side facing lights: [#LOC]. | $3,721 |
| 5550-0192 | Federal Signal QuadraFlare LED lower level warning light package. Includes (8) QL64XF-R LED light heads with bezels and (2) IMPAXX LED model IPX302-4 light heads. Locate side facing lights: [#LOC]. | $2,340 |
| 5550-0194 | Federal Signal QuadraFlare LED lower level warning light package. Includes (4) QL64XF-R LED light heads (4) QL64XF-B LED light heads (1) IMPAXX LED model IPX302-3 light head and (1) IMPAXX LED model IPX302-4 light head. Lights to alternate red/blue around unit; see specification. Locate side facing lights: [#LOC]. | $2,383 |
| 5550-0197 | Weldon Diamondback LED lower level warning light package. Includes (4) red V46 LED light heads w/clear lenses (4) red V79 LED light heads w/clear lenses and (2) red V26 LED light heads w/clear lenses. Locate side facing lights: [#LOC]. | $4,165 |
| 5550-0210 | Federal Signal QuadraFlare LED lower level warning light package. Includes (8) Quadraflare light heads (7) QL64XF-R (red) LED lights and (1) QL64XF-B (blue) LED light with bezels and (2) IMPAXX LED model IPX302-4 light heads. Locate side facing lights: [#LOC]. | $2,340 |
| 5550-0211 | Whelen Super LED lower level warning light package with clear lenses. Includes (8) 600 LED light heads (4 red driver's side 4 blue officer's side) and (2) 500 LED light heads (1 red driver's side 1 blue officer's side)w/chrome flanges. Locate side facing lights: [#LOC]. | $2,950 |
| 5550-0214 | Whelen Super LED lower level warning light package with clear lens. Includes (7) red 600 LED light heads (1) blue 600 LED light heads and (2) red 500 LED light heads. Locate side facing lights: [#LOC]. | $2,950 |
| 5550-0225 | Whelen M6 Super LED lower level warning light package. Includes (8) red M6RC LED light heads with clear lens and (2) red M2RC LED light heads with clear lens. Locate side facing lights: [#LOC]. | $3,286 |
| 5550-0227 | Whelen M6/M7/600/IONWR Super LED lower level warning light package. Includes (2) red M6R LED light heads (4) split red/clear M7D light heads (2) 600 Series Super LED light heads Red with clear lenses and (2) red IONWR LED light heads. See specification for location of split lights. Locate side facing lights: [#LOC]. | $3,875 |
| 5550-0234 | Whelen M6RC Super LED lower level warning light package. Includes (8) red M6RC LED light heads and (2) red 500 Super LED light heads w/chrome flanges and clear lenses. Locate side facing lights: [#LOC]. | $3,286 |
| 5550-0236 | Whelen M6 Super LED lower level warning light package. Includes (6) red M6R LED light heads (2) blue M6B LED light heads (1 officer front and 1 officer rear facing) and (2) red M2R LED light heads. Locate side facing lights: [#LOC]. | $3,286 |
| 5550-0238 | Federal Signal QuadraFlare LED lower level warning light package. Includes (3) QL64XF-R LED light heads (3) QL64XF-B LED light heads (2) IMPAXX LED model IPX302-3 light head and (2) IMPAXX LED model IPX302-4 light head. Lights to alternate red/blue around unit; see specification. Locate side facing lights: [#LOC]. | $2,383 |
| 5550-0240 | Whelen Super LED lower level warning light package. Includes (8) red 600 LED light heads and (2) red 500 LED light heads w/chrome flanges. Locate side facing lights: [#LOC]. | $2,950 |
| 5550-0241 | Whelen M6 Super LED lower level warning light package. Includes (6) M6R red LED light heads (2) M9R red LED light heads and (2) red M2R red Super LED light heads. Locate side facing lights: [#LOC]. | $4,223 |
| 5550-0242 | Whelen Super LED lower level warning light package. Includes (8) 600 LED light heads (6) Red/Blue (2) Red /White with clear lenses and (2) red 500 LED light heads with clear lenses and chrome flanges. Locate side facing lights: [#LOC]. | $3,335 |
| 5550-0245 | Whelen Super LED lower level warning light package. Includes (4) red 600 LED light heads (4) blue 600 LED light heads (1) red 500 LED light head and (1) blue 500 LED light head all with clear lenses. Lights to be driver side blue officer side red; see specification. Locate side facing lights: [#LOC]. | $2,950 |
| 5550-0248 | Federal Signal QuadraFlare LED lower level warning light package with clear lenses. Includes (8) QL64XFC-R LED light heads with bezels and (2) IMPAXX LED model IPX300-4 light heads. Locate side facing lights: [#LOC]. | $2,340 |
| 5550-0249 | Whelen M6 Super LED lower level warning light package. Includes (5) red M6R LED light heads (2) M6J split red/blue LED light heads (1) blue M6B LED light head (officer front) and (2) red M2R LED light heads. Locate side facing lights: [#LOC]. | $3,722 |
| 5550-0251 | Whelen 600 series Super LED lower level warning light package. Includes (10) LED light heads w/chrome flanges. (5) Red (5) blue alternating. Locate side facing lights: [#LOC]. | $3,122 |

| Item No. | Description | |
|---|---|---|
| 5550-0252 | Whelen 600 series Super LED lower level warning light package. Includes (8) red LED light heads with clear lenses and (2) split red/blue LED light heads with clear lenses. Locate side facing lights: [#LOC]. | $3,177 |
| 5550-0254 | Whelen M6 Super LED lower level warning light package. Includes (4) red M6RC LED light heads with clear lenses and chrome flanges (4) split red/clear M6D light heads with clear lenses and chrome flanges and (2) red M2RC LED light heads. See specifications for locations of split lights. Locate side facing lights: [#LOC]. | $3,726 |
| 5550-0257 | Whelen M6 Super LED lower level warning light package. Includes (10) red/blue M6J LED light heads w/chrome flanges and clear lenses. Locate side facing lights: [#LOC]. | $3,655 |
| 5550-0258 | Whelen M6 Super LED lower level warning light package. Includes (4) red M6R LED light heads (4) blue M6B LED light heads (1) red M2R LED light head and (1) blue M2B LED light head. Driver side red officer side blue. Locate side facing lights: [#LOC]. | $3,286 |
| 5550-0260 | Federal Signal QuadraFlare LED lower level warning light package. Includes (4) QL64XF-R LED light heads (4) QL64XF-B LED light heads (1) IMPAXX LED model IPX302-3 light head and (1) IMPAXX LED model IPX302-4 light head. Lights to alternate red/blue around unit; see specification. Locate side facing lights: [#LOC]. | $2,383 |
| 5550-0261 | Whelen M6 Super LED lower level warning light package. Includes (10) M6RC red LED with clear lens light heads w/chrome flanges. Locate side facing lights: [#LOC]. | $3,702 |
| 5550-0262 | Whelen M6 Super LED lower level warning light package. Includes (10) blue M6B LED light heads w/chrome flanges. Locate side facing lights: [#LOC]. | $3,702 |
| 5550-0264 | Power Arc LED 4/2/2/2 red/white/blue/yellow lower level warning light package. Includes (4) P14SM (2) M90DHL (1-WR 1-BW) (2)M90FK and (2) LED210. See specifications for exact locations and colors. Locate side facing lights: [#LOC]. | $5,912 |
| 5550-0265 | Whelen M6 Super LED lower level warning light package. Includes (4) red M6R LED light heads (4) blue M6B LED light heads (1) red M2R LED light head and (1) blue M2B LED light head. Alternate red/blue around unit. Locate side facing lights: [#LOC]. | $3,286 |
| 5550-0266 | Federal Signal QuadraFlare LED lower level warning light package. Includes (6) QL64XF-R LED light heads with bezels (2) QL64SFC-WR and (2) IMPAXX LED model IPX302-4 light heads. Locate side facing lights: [#LOC]. | $2,992 |
| 5550-0267 | Whelen Super LED lower level warning light package. Includes (8) red 600 LED light heads and (2) red 500 LED light heads w/chrome flanges. Locate side facing lights: [#LOC]. | $2,950 |
| 5550-0269 | Federal Signal QuadraFlare LED lower level warning light package. Includes (5) QL64XF-R LED light heads with bezels (3) QL64XF-B LED light heads with bezels and (2) QL64XF-A LED light heads with bezels. Lights to located as per specificaton. Locate side facing lights: [#LOC]. | $2,611 |
| 5550-0274 | Federal Signal QuadraFlare LED lower level warning light package. Includes (7) QL64XF-R LED light heads (1) QL64XF-G light head and (2) IMPAXX LED model IPX302-4 light heads. Locate side facing lights: [#LOC]. | $2,617 |
| 5550-0275 | Whelen M6 Super LED lower level warning light package. Includes (6) red M6R LED light heads and (4) red M2R LED light heads. Locate side facing lights: [#LOC]. | $3,130 |
| 5550-0276 | Code3 LED 6/2/2 lower level warning light package. Includes (8) model 65 red LED and (2) LXEX1F red LED lights all with clear lenses. Includes chrome bezels where applicable. Locate side facing lights: [#LOC]. | $3,288 |
| 5550-0277 | Federal Signal QuadraFlare LED lower level warning light package with clear lenses. Includes (8) QL64XFC-R red LED light heads with bezels and (2) IMPAXX LED model IPX600-B blue light heads. Locate side facing lights: [#LOC]. | $2,404 |
| 5550-0278 | Federal Signal QuadraFlare LED lower level warning light package. Includes (7) QL64XF-R LED (1) QL64XF-B LED light head with bezel (driver rear facing) and (2) IMPAXX LED model IPX302-4 light heads. Locate side facing lights: at forward most position centered in rear wheel well and side facing at rear of body in rubrail if equipped. | $2,340 |
| 5550-0280 | Federal Signal QuadraFlare LED lower level warning light package. Includes (8) QL64XF-B LED light heads with bezels and (2) IMPAXX LED model IPX302-3 light heads. Locate side facing lights: [#LOC]. | $2,340 |
| 5550-0282 | Whelen M6 Super LED lower level warning light package. Includes (8) red M6R and (2) blue M6B LED light heads w/chrome flanges. See specifications for color locations. Locate side facing lights: [#LOC]. | $3,702 |
| 5550-0283 | Code3 LED 8/2 red/blue lower level warning light package. Includes (8) model 65 LED and (2) LXEX1F LED lights. See specification for exact locations. Includes chrome bezels where applicable. Locate side facing lights: [#LOC]. | $3,288 |
| 5550-0285 | Whelen M6 Super LED lower level warning light package. Includes (7) red M6R LED light heads (1) green M6G and (2) red M2R LED light heads. Locate side facing lights: [#LOC]. | $3,338 |

| Item No. | Description | |
|---|---|---|
| 5550-0286 | Federal Signal QuadraFlare LED lower level warning light package with clear lenses. Includes (6) QL64SFC-RR LED light heads with bezels (2) QL64SFC-WR and (2) IMPAXX LED model IPX300-4 light heads. See specification for exact locations. Locate side facing lights: [#LOC]. | $3,103 |
| 5550-0287 | Whelen Super LED lower level warning light package. Includes (6) red M6R LED light heads (2) red 600 LED light heads and (2) red M2R LED light heads. Locate side facing lights: [#LOC]. | $3,286 |
| 5550-0289 | Whelen M6/M7/M2/M9 Super LED lower level warning light package with clear lenses. Includes (2) red M6RC LED light heads (4) red M7RC light heads (2) red M2RC LED light heads and (2) red M9RC LED light heads. See specification for exact locations lights. Locate side facing lights: [#LOC]. | $3,842 |
| 5550-0290 | Whelen M6 Super LED lower level warning light package. Includes (6) red M6RC LED light heads (2) split red/amber M6K light heads and (2) red M2RC LED light heads. Locate side facing lights: [#LOC]. | $3,629 |
| 5550-0291 | Whelen Super LED lower level warning light package. Includes (6) red M6RC LED light heads with clear lenses (2) red 600 LED light heads with clear lenses and (2) red M2RC LED light heads with clear lenses. Locate side facing lights: [#LOC]. | $3,286 |
| 5550-0293 | Whelen Super LED lower level warning light package with clear lenses. Includes (8) red 600 LED light heads and (2) red TIR3 LED light heads grommet mounted. Locate side facing lights: [#LOC]. | $2,810 |
| 5550-0295 | Whelen M6 Super LED lower level warning light package. Includes (6) red M6RC LED light heads (2) red 6RBRC Rota-Beam LED and (2) red M2RC LED light heads with clear lenses. Locate side facing lights: [#LOC]. | $3,885 |
| 5550-0296 | Whelen LED upper level rear warning light package. Includes (1) rear facing Dominator Plus model DP88000 red and (2) 700 series Super LED; (1) driver upper body corner side facing and (1) officer upper body corner side facing. | $2,261 |
| 5550-0298 | Whelen M6 Super LED lower level warning light package. Includes (6) M6RC red LED light heads (2) M9 (1 red 1 blue) LED light heads w/clear lenses and (2) red M2RC red Super LED light heads. Locate side facing lights: [#LOC]. | $4,223 |
| 5550-0299 | Whelen M6 Super LED lower level warning light package. Includes (7) red M6R and (3) blue M6B LED light heads w/chrome flanges. See specifications for color locations. Locate side facing lights: [#LOC]. | $3,702 |
| 5550-0304 | Whelen M6 Super LED lower level warning light package. Includes (8) red M6R LED light heads and (2) red PSR00FRR Super LED light heads w/chrome flanges. Locate side facing lights: [#LOC]. | $3,286 |
| 5550-0305 | Federal Signal QuadraFlare LED lower level warning light package. Includes (6) QL64XF-R LED light heads with bezels (2) QL64SFC-WR and (2) IMPAXX LED model IPX302-4 light heads. Locate side facing lights: [#LOC]. | $2,992 |
| 5550-0306 | Whelen Super LED lower level warning light package. Includes (8) red 600 LED light heads and (2) red 500 LED light heads w/black flanges. Locate side facing lights: [#LOC]. | $2,950 |
| 5550-0307 | Whelen M6 Super LED lower level warning light package. Includes (8) red M6RC LED light heads with clear lens and (and (2) red TIR3 LED light heads grommet mounted with clear lenses. Locate side facing lights: [#LOC]. | $3,286 |
| 5550-0310 | Whelen M6 Super LED lower level warning light package. Includes (6) M6RC red LED light heads (2) M9RC red LED light heads (rear facing) and (2) red M2RC red Super LED light heads. Locate side facing lights: [#LOC]. | $4,223 |
| 5550-0311 | Whelen M6 Super LED lower level warning light package with clear lenses. Includes (7) red M6RC LED light heads (1) blue M6BC light head and (2) blue M2BC LED light heads. Locate side facing lights: [#LOC]. | $3,286 |
| 5550-0312 | Whelen M6 Super LED lower level warning light package. Includes (4) M6RC red LED light heads (2) M9RC red LED light heads and (4) red M2RC red Super LED light heads. Locate side facing lights: [#LOC]. | $4,160 |
| 5550-0313 | Whelen Super LED lower level warning light package with clear lenses. Includes (8) 600 LED light heads (1 red 7 blue) and (2) blue 500 LED light heads w/chrome flanges. Locate side facing lights: [#LOC]. | $2,950 |
| 5550-0314 | Whelen Super LED lower level warning light package with clear lens. Includes (5) red 600 LED light heads (3) blue 600 LED light heads and (2) red 500 LED light heads. Locate side facing lights: [#LOC]. | $2,950 |
| 5550-0315 | Power Arc LED 4/4/2 lower level warning light package. Includes 210LED-1B frt dr side 210LED-2R frt off side 210LED-2R rr dr side 210LED-1B rr off side and (4) P14SM; (2) red (2) blue. Locate side facing lights: [#LOC]. | $4,412 |
| 5550-0316 | Whelen M6 Super LED lower level warning light package. Includes (8) red M6RC LED light heads with clear lens and (2) red PSR00FRR LED light heads. Locate side facing lights: [#LOC]. | $3,286 |

| Item No. | Description | |
|---|---|---|
| 5550-0317 | Whelen M6 Super LED lower level warning light package with clear lenses. Includes (4) M6V2 (2 red 2 blue) LED light heads (4) M6 (2 red 2 blue) LED light heads and (2) TIR3 (1 red 1 blue) LED light heads. See specifications for exact locations. Locate side facing lights: [#LOC]. | $4,913 |
| 5550-0318 | Whelen Super LED lower level warning light package. Includes (6) red 600 LED light heads (2) red M6V2R LED light heads and (2) red 500 LED light heads w/chrome flanges. Locate side facing lights: [#LOC]. | $3,899 |
| 5550-0321 | Federal Signal QuadraFlare LED lower level warning light package. Includes (2) QL64XF-R red LED light heads (4) QL64SFC-RC split red/clear LED light heads (2) QL64XF-B LED (rear facing) light heads and (2) IMPAXX LED model IPX302-4 light heads. Locate side facing lights: [#LOC]. | $2,705 |
| 5550-0322 | Power Arc LED 4/2/2/2 red/white/blue/yellow lower level warning light package. Includes (2)P14SM (2)M90DHL(1-WR 1-BW) (2)M90FK (2)LED210 and (2)PP2-R. See specifications for exact locations and colors. Locate side facing lights: [#LOC]. | $5,912 |
| 5550-0324 | Whelen 600 series Super LED lower level warning light package. Includes (5) driver red LED light heads w/chrome flanges and (5) officer blue LED light heads w/chrome flanges. Locate side facing lights: [#LOC]. | $3,122 |
| 5550-0325 | Whelen M6 Super LED lower level warning light package. Includes (4) red M6R LED light heads (4) red 6RBR Rota-Beam LED and (2) red 5V1R LED light heads. Locate side facing lights: [#LOC]. | $4,492 |
| 5550-0328 | Whelen M6 Super LED lower level warning light package with clear lenses. Includes (6) red M6RC LED light heads (2) blue M6BC LED light heads (1 officer front and 1 officer rear facing) and (2) red TIR3 LED light heads. Locate side facing lights: [#LOC]. | $3,286 |
| 5550-0329 | Whelen Super LED lower level warning light package. Includes (6) red M6R LED light heads (2) blue M6B LED light heads and (2) red TIR6 series Super LED light heads w/chrome flanges. Locate side facing lights: [#LOC]. | $3,702 |
| 5550-0331 | Whelen Super LED lower level warning light package with clear lenses. Includes (8) red 600 LED light heads and (2) WIOND split red/clear LED light heads grommet mounted. Locate side facing lights: [#LOC]. | $2,912 |
| 5550-0332 | Federal Signal QuadraFlare LED lower level warning light package. Includes (7) QL64XF-R (red) LED lights and (1) QL64XF-B (blue) LED light with bezels and (2) IMPAXX LED model IPX302-4 light heads. Locate side facing lights: [#LOC]. | $2,340 |
| 5550-0334 | Whelen Super LED 4/2/2/2 lower level warning light package with clear lenses. Includes (4) M6RC red (2) M9D split red/clear (2) M7RC red and (2) M2RC red LED light heads w/weatherproof connectors. See specification for exact light locations. Locate side facing lights: [#LOC]. | $3,711 |
| 5550-0335 | Whelen M6 Super LED lower level warning light package. Includes (4) red M6RC LED light heads (2) split red/clear M6D light heads (2) red 6RBRC Rota-Beam LED and (2) red M2RC LED light heads with clear lenses. Locate side facing lights: [#LOC]. | $3,932 |
| 5550-0336 | Whelen M6 Super LED lower level warning light package with clear lenses. Includes (7) red M6RC LED light heads (1) green M6GC and (2) red M2R CLED light heads. Locate side facing lights: [#LOC]. | $3,338 |
| 5550-0337 | Federal Signal QuadraFlare LED lower level warning light package with clear lenses. Includes (7) QL64SFC-RR LED light heads with bezels (1) QL64SFC-GR and (2) Viper EXT LED model VPX800-4 light heads. See specification for exact locations. Locate side facing lights: [#LOC]. | $3,103 |
| 5550-0338 | Whelen Super LED lower level warning light package with clear lenses. Includes (4) red M6RC LED light heads w/chrome flanges (6) red M9RC led light heads. Locate side facing lights: [#LOC]. | $4,992 |
| 5550-0339 | Whelen M6 Super LED lower level warning light package. Includes (6) M6RC red LED light heads (2) M9RC red LED light heads (side facing) and (2) red M2RC red Super LED light heads. Locate side facing lights: [#LOC]. | $4,223 |
| 5550-0340 | Whelen Super LED lower level warning light package with clear lenses. Includes (4) red 600 LED light heads (4) blue 600 LED light heads (1) red 500 LED light head and (1) blue 500 LED light head. LIghts to alternate red/blue around unit; see specification. Locate side facing lights: [#LOC]. | $2,950 |
| 5550-0341 | Whelen M6 Super LED lower level warning light package with clear lenses. Includes (4) red M6V2RC LED light heads (4) red M6RC LED light heads and (2) red M2RC LED light heads. Locate side facing lights: [#LOC]. | $5,100 |
| 5550-0342 | Federal Signal QuadraFlare LED lower level warning light package. Includes (4) QL64XF-R LED light heads (4) QL64XF-B LED light heads (1) IMPAXX LED model IPX302-3 light head and (1) IMPAXX LED model IPX302-4 light head. Driver red officer blue. Locate side facing lights: [#LOC]. | $2,383 |

| Item No. | Description | |
|---|---|---|
| 5550-0343 | Federal Signal QuadraFlare LED lower level warning light package with clear lenses. Includes (8) QL64XFC-R LED light heads with bezels and (2) IMPAXX LED model IPX300-4 light heads. Locate side facing lights: [#LOC]. | $2,340 |
| 5550-0344 | Whelen M6 Super LED lower level warning light package. Includes (6) red M6R LED light heads and (4) red 6RBR Rota-Beam LED light heads. Locate side facing lights: [#LOC]. | $4,251 |
| 5550-0346 | Whelen 600 Super LED lower level warning light package. Includes (6) red 600 LED light heads (2) red 6RBR Rota-Beam LED and (2) red 500 LED light heads. Locate side facing lights: [#LOC]. | $3,589 |
| 5550-0348 | Federal Signal QuadraFlare LED lower level warning light package. Includes (4) QL64XFC-R LED light heads with bezels (2) QL64SFC-RC LED light heads with bezels and (4) IMPAXX LED model IPX300-4 light heads. See specification for detail of lighting locations. Locate side facing lights: [#LOC]. | $2,525 |
| 5550-0349 | Whelen M6 Super LED lower level warning light package with clear lenses. Includes (2) red M6V2RC LED light heads (4) red M6RC LED light heads (2) split red/clear M6D LED light heads and (2) red M2RC LED light heads. Locate side facing lights: [#LOC]. | $4,332 |
| 5550-0350 | Whelen M6 Super LED lower level warning light package. Includes (4) red M6RC LED light heads with clear lenses and chrome flanges (2) split red/clear M6D light heads with clear lenses (2) split red/clear M7D light heads with clear lense and chrome flanges and (2) red M2RC LED light heads. See specifications for locations of split lights. Locate side facing lights: [#LOC]. | $3,726 |
| 5550-0351 | Whelen M6 Super LED lower level warning light package with clear lenses. Includes (2) red M6V2RC LED light heads (4) red M6RC LED light heads (2) split red/clear M6D LED light heads and (2) red M2RC LED light heads. Locate side facing lights: [#LOC]. | $4,332 |
| 5550-0352 | Whelen Super LED lower level warning light package with clear lenses. Includes (8) 600 LED light heads (6 red2 blue; (1) forward and (1) rearward facing driver side) and (2) blue 500 LED light heads w/chrome flanges. Locate side facing lights: [#LOC]. | $2,950 |
| 5550-0354 | Whelen M Series Super LED lower level warning light package. Includes (8) red M6RC LED light heads and (2) red M2RC LED light heads with clear lenses. Locate side facing lights: [#LOC]. | $3,286 |
| 5550-0355 | Federal Signal Impaxx LED lower level warning light package. Includes (10) Impaxx LED light heads with bezels located (1) each side of hood area (1) each side forward facing mounted in grill area (1) each side below the forward body compartment (offset rearward) (1) each side below the rearward body compartments (offset rearward) and (1) each side on rear of body down low below the taillights (offset outboard). | $1,925 |
| 5550-0357 | Code3 Prizm II model 468R red LED lower level warning light package with chrome bezels (as applicable). Includes (10) LED lights. Locate side facing lights: [#LOC]. | $3,029 |
| 5550-0358 | Code3 Prizm II model 468CR red LED lower level warning light package with chrome bezels (as applicable) and clear lenses. Includes (10) LED lights. Locate side facing lights: [#LOC]. | $3,029 |
| 5550-0359 | Code3 Prizm II 8/2 red LED lower level warning light package. Includes (8) model 468R red LED and (2) model LXEX1F-R red LED. Locate side facing lights: [#LOC]. | $2,970 |
| 5550-0360 | Code3 Prizm II 8/2 red LED lower level warning light package with clear lenses. Includes (8) model 468CR red LED and (2) model LXEX1F-R red LED. Locate side facing lights: [#LOC]. | $2,970 |
| 5550-0363 | Whelen Super LED lower level warning light package with clear lenses. Includes (4) red 600 LED light heads (4) blue 600 LED light heads (1) red 500 LED light head and (1) blue 500 LED light head. LIghts to alternate red/blue around unit; see specification. Locate side facing lights: [#LOC]. | $2,950 |
| 5550-0364 | Whelen 600 series Super LED lower level warning light package with clear lenses. Includes (5) red LED light heads w/chrome flanges and (5) blue LED light heads w/chrome flanges. LIghts to alternate red/blue around unit; see specification. Locate side facing lights: [#LOC]. | $3,122 |
| 5550-0366 | Federal Signal QuadraFlare LED lower level warning light package with clear lenses. Includes (4) QL64XFC-R LED light heads (4) QL64XFC-B LED light heads (1) IMPAXX LED model IPX300-3 light head and (1) IMPAXX LED model IPX300-4 light head. Lights to alternate red/blue around unit; see specification. Locate side facing lights: [#LOC]. | $2,383 |
| 5550-0369 | Whelen Super LED lower level warning light package. Includes (8) 600 LED light heads (6 red2 blue rear facing) and (2) red 500 LED light heads w/chrome flanges. Locate side facing lights: [#LOC]. | $2,950 |
| 5550-0370 | Whelen M6 Super LED lower level warning light package. Includes (6) red M6RC LED light heads with clear lenses and chrome flanges (2) split red/clear M6D light heads with clear lenses and chrome flanges and (2) M2RC red light heads with clear lenses. See specifications for location of split lights. Locate side facing lights: [#LOC]. | $3,600 |

| Item No. | Description | |
|---|---|---|
| 5550-0371 | Whelen M6 Super LED lower level warning light package. Includes (6) red M6RC LED light heads with clear lenses and chrome flanges (2) split red/clear M6D light heads with clear lenses and chrome flanges and (2) WIONR red light heads with clear lenses. See specifications for location of split lights. Locate side facing lights: [#LOC]. | $3,600 |
| 5550-0372 | Whelen Super LED lower level warning light package. Includes (8) 600 LED light heads (7 red1 blue rear facing driver side) and (2) red 500 LED light heads w/chrome flanges. Locate side facing lights: [#LOC]. | $2,950 |
| 5550-0373 | Federal Signal QuadraFlare LED lower level warning light package with clear lenses. Includes (8) QL64XFC-R LED light heads with bezels and (2) IMPAXX LED model IPX300-4 light heads. Locate side facing lights: [#LOC]. | $2,340 |
| 5550-0377 | Whelen 600 series Super LED lower level warning light package with clear lenses. Includes (9) red LED light heads w/chrome flanges and (1) blue LED light head w/chrome flange. Locate side facing lights: [#LOC]l. | $3,122 |
| 5550-0379 | Whelen Super LED lower level warning light package with clear lenses. Includes (6) red/clear M6 split LED light heads (2) red M6 LED light heads and (2) split red/clear Micron LED light heads w/chrome flanges. Locate side facing lights: [#LOC]. | $4,053 |
| 5550-0380 | Whelen M series Super LED lower level warning light package. Includes (4) red 600 Super LED light heads (4) red M6V2R LED light heads and (2) red M2R LED light heads. Locate side facing lights: [#LOC]. | $4,795 |
| 5550-0381 | Whelen M6 Super LED lower level warning light package. Includes (4) red M6V2R LED light heads (4) red M6R LED light heads and (2) red M2R LED light heads. Locate side facing lights: [#LOC]. | $5,100 |
| 5550-0382 | Whelen M6 Super LED lower level warning light package. Includes (6) red M6RC LED light heads with clear lenses (2) red 600 LED light heads with clear lenses and (2) WIOND split red/clear light heads with clear lenses grommet mounted. Locate side facing lights: [#LOC]. | $3,600 |
| 5550-0383 | Whelen M6 Super LED lower level warning light package. Includes (4) red M6V2R LED light heads (4) red M6R LED light heads and (2) red M2R LED light heads. Locate side facing lights: [#LOC]. | $5,100 |
| 5550-0384 | Whelen M6 Super LED lower level warning light package. Includes (4) red M6V2R LED light heads (4) red M6R LED light heads and (2) red 5V1R LED light heads. Locate side facing lights: [#LOC]. | $5,377 |
| 5550-0385 | Federal Signal QuadraFlare LED lower level warning light package. Includes (6) QL64XF-R LED light heads with bezels (2) QL97XF-R and (2) IMPAXX LED model IPX302-4 light heads. Locate side facing lights: [#LOC]. | $2,992 |
| 5550-0386 | Whelen M6 Super LED lower level warning light package. Includes (2) red M6V2R LED light heads (4) split red/clear M6D LED light heads with clear lenses (2) red M6R LED light heads and (2) red M2R LED light heads. See specifications for exact locations. Locate side facing lights: [#LOC]. | $4,391 |
| 5550-0387 | Whelen Super LED lower level warning light package. Includes (4) red 600 LED light heads (4) red 6RBR Rota-Beam LED and (2) red TIR6 LED light heads. Locate side facing lights: [#LOC]. | $4,046 |
| 5550-0388 | Whelen M6 Super LED lower level warning light package. Includes (6) red M6V2R LED light heads and (4) red M6R LED light heads. Locate side facing lights: [#LOC]. | $6,113 |
| 5550-0389 | Whelen M6 Super LED lower level warning light package. Includes (2) red M6V2R LED light heads (6) red M6R LED light heads and (2) red M2R LED light heads. Locate side facing lights: [#LOC]. | $4,116 |
| 5550-0390 | Federal Signal QuadraFlare LED lower level warning light package. Includes (8) QL64XF-R LED light heads with bezels and (2) Micro Pulse model MPS1200U-RR LED light heads. Locate side facing lights: [#LOC]. | $2,430 |
| 5550-0391 | Whelen M6 Super LED lower level warning light package. Includes (5) red M6R LED light heads (3) blue M6B light heads and (2) red M2R LED light heads. See specifications for exact locations. Locate side facing lights: [#LOC]. | $3,286 |
| 5550-0394 | Whelen M6 Super LED lower level warning light package. Includes (8) red M6RC LED light heads and (2) red 6RBRC Rota-Beam LED with clear lenses. Locate side facing lights: [#LOC]. | $3,933 |
| 5550-0395 | Whelen M6 Super LED lower level warning light package. Includes (4) split red/blue M6J LED light heads (2) red M6RC LED light heads (2) blue M6BC LED light head and (2) red M2RC LED light heads with clear lenses. See specifications for exact locations of lighting. Locate side facing lights: [#LOC]. | $3,784 |
| 5550-0396 | Whelen M6 Super LED lower level warning light package. Includes (7) red M6R LED light heads (1) blue M6B light head and (2) blue M2B LED light heads. Locate side facing lights: [#LOC]. | $3,286 |

| Item No. | Description | |
|---|---|---|
| 5550-0397 | Power Arc LED 4/2/2 red/white/blue lower level warning light package with clear lenses. Includes (2) MP13-BW (2) M90DHL (1-WR 1-BW) and (4) M90 (3 red 1 blue). See specifications for exact locations and colors. Locate side facing lights: at forward most position and centered in rear wheel well. | $5,008 |
| 5550-0398 | Federal Signal QuadraFlare LED lower level warning light package. Includes (8) QL64XF-R LED light heads (1) QL64XF-B LED light head and (1) QL64XF-A LED light head with bezels. Locate side facing lights: [#LOC]. | $2,611 |
| 5550-0399 | Whelen M6 Super LED lower level warning light package with clear lenses. Includes (6) red M6V2RC LED light heads (2) red M6RC LED light heads and (2) red M2RC LED light heads. Locate side facing lights: [#LOC]. | $5,587 |
| 5550-0400 | Whelen Super LED lower level warning light package with clear lenses. Includes (8) red/blue 600 split LED light heads and (2) red/blue 500 split LED light heads w/chrome flanges. Locate side facing lights: [#LOC]. | $3,709 |
| 5600-0002 | Warning light Whelen 600 series strobe (PR) [#COL]. Requires power pack or option with spare power pack outlets. Includes weatherproof connectors. Requires engineering approval for NFPA applications. Location(s): [#LOC] | $466 |
| 5600-0005 | Warning light Whelen 700 series strobe (PR) [#COL]. Requires power pack or option with spare power pack outlets. Includes weatherproof connectors. Requires engineering approval for NFPA applications. Location(s): [#LOC] | $460 |
| 5600-0008 | Warning light Whelen 900 series strobe (PR) [#COL]. Requires power pack or option with spare power pack outlets. Includes weatherproof connectors. Requires engineering approval for NFPA applications. Location(s): [#LOC] | $466 |
| 5600-0011 | Whelen power supply model UPS64LX 4Place 75Watt strobe. | $600 |
| 5600-0012 | Whelen power supply model ISP148 eight (8) place 140watt strobe. | $1,405 |
| 5600-0013 | Whelen power supply model ISP188 eight (8) place 180watt strobe. | $1,503 |
| 5600-0017 | Warning light Whelen 500 series LED (PR) red. Surface mounted with weatherproof connector. Location: [#LOC] | $456 |
| 5600-0020 | Warning light Whelen 600 series LED (PR) amber. Location: [#LOC] Surface mounted with weatherproof connector. Requires engineering approval for NFPA applications. | $812 |
| 5600-0021 | Warning light Whelen 600 series LED (PR) red. Surface mounted with weatherproof connector. Location: [#LOC] | $812 |
| 5600-0022 | Warning light Whelen 700 series LED (PR) red. Surface mounted with weatherproof connector. Location: [#LOC] | $710 |
| 5600-0023 | Warning light Whelen 900 series LED (PR) amber. Location: [#LOC] Surface mounted with weatherproof connector. Requires engineering approval for NFPA applications. | $1,469 |
| 5600-0024 | Warning light Whelen 900 series LED (PR) red. Surface mounted with weatherproof connector. Location: [#LOC] | $1,469 |
| 5600-0025 | Warning light Whelen 600 series halogen (PR) [#COL]. Includes weatherproof connectors. Requires engineering approval for NFPA applications. Location(s): [#LOC] | $376 |
| 5600-0027 | Warning light Whelen 900 series halogen (PR) [#COL]. Includes weatherproof connectors. Requires engineering approval for NFPA applications. Location(s): [#LOC] | $376 |
| 5600-0029 | Code3 Model 550 rotating (PR) with [#COL] domes. Location: [#LOC]. | $402 |
| 5600-0030 | Code3 Model #550/#41. Includes (2) #550's with red domes and (2) #41 lights with [#COL] lenses. Total four (4) lights at rear upper. Location of Model 550 lights: [#LOC]. | $1,035 |
| 5600-0031 | Code 3 / PSE Oscilaser warning light (PR). Lights are to be located on front of cab in the inboard position of the quad bezel. | $624 |
| 5600-0033 | Whelen beacon with halogen rotator and 700 series strobe (PR) Model B6R with red domes and [#COL] strobes. Location [#LOC]. Requires power pack. | $889 |
| 5600-0034 | Federal model SY12FS Sentry (PR) with [#COL] domes. Location: [#LOC]. | $403 |
| 5600-0036 | Federal model IVP100 Vector pod (PR) with [#COL] domes. Location: [#LOC]. | $480 |
| 5600-0038 | Federal Model IVP200F Vector pod warning light (PR) with [#COL] filters. Location: [#LOC]. | $522 |
| 5600-0041 | Warning light Federal Signal GS2 strobe (PR) [#COL]. Requires power pack or option w/spare power pack outlets. Requires engineering approval for NFPA applications. Location(s): [#LOC]. | $448 |
| 5600-0046 | Warning light Federal Signal GH1F halogen (PR) [#COL]. Location(s): [#LOC] | $337 |
| 5600-0048 | Warning light Federal Signal GL5 LED (PR) red. Location: [#LOC] | $664 |
| 5600-0049 | Warning light Federal Signal GS5 strobe (PR) [#COL]. Requires power pack or option w/spare power pack outlets. Requires engineering approval for NFPA applications. Location(s): [#LOC] | $410 |
| 5600-0051 | Warning light Federal Signal GL5 LED (PR) amber. Location: [#LOC]. | $685 |
| 5600-0052 | Federal Signal SPS4-NFPA (4) place 90 watt strobe power supply. Required when using Federal Signal strobes. | $595 |

| Item No. | Description | |
|---|---|---|
| 5600-0053 | Federal Signal SPS8-NFPA (8) place 192 watt strobe power supply. Required when using Federal Signal strobes. | $1,059 |
| 5600-0061 | Mars 888 pedestal mounted traffic clearing light on front of cab centered below windshield. Lens color: clear. | $984 |
| 5600-0062 | Warning light Roto Ray 200 with red lenses. N/A on commercial chassis. Locate on front of cab centered below windshield. | $1,699 |
| 5600-0063 | Warning light Roto Ray 200 with (2) red and (1) clear lenses. N/A on commercial chassis. Locate on front of cab centered below windshield. | $1,699 |
| 5600-0067 | Federal Signal Model #100 beacon (PR) with [#COL] domes. Location: [#LOC]. | $514 |
| 5600-0074 | Opticom Emitter 3M #792H. Emitter and control only. Wire through parking brake. Location: [#LOC]. | $3,144 |
| 5600-0075 | Opticom Emitter 3M #592 Chrome. Emitter and dash control only. Wire through parking brake. Location: [#LOC]. | $3,735 |
| 5600-0078 | Whelen Super LED beacon (PR) model L31H with [#COL] domes. Location [#LOC]. | $1,942 |
| 5600-0079 | Whelen beacon with halogen rotator and 700 series LED (PR) Model B6TM with red domes and [#COL] LEDs. Location [#LOC]. | $1,471 |
| 5600-0080 | Whelen beacon with LED upper beacon and 700 series Super LED (PR) model B6LED with red domes and [#COL] LEDs. Location: [#LOC]. | $2,975 |
| 5600-0081 | Code 3 / PSE Oscilaser warning light clear (PR). Lights are to be located on front of cab above quad bezels. | $654 |
| 5600-0083 | Warning light Code3 LXEX1F-R LED (PR). Surfaced mounted with clear lens. Location: [#LOC] | $740 |
| 5600-0085 | Tomar strobe preemption emitter with chrome housing. Includes pedestal mount and switch accessible to driver. Wire through parking brake. Location: [#LOC]. | $1,535 |
| 5600-0086 | Whelen beacon model RB6T (PR) with [#COL] domes. Location: [#LOC]. | $418 |
| 5600-0087 | Warning light Code 3 65BZA LED (PR) amber. Surface mounted with bezel. Location: [#LOC] | $598 |
| 5600-0088 | Warning light Code 3 65BZR LED (PR) Red. Surface mounted with bezel. Location: [#LOC] | $598 |
| 5600-0089 | Warning Light Code3 model #65BZRW split red/clear LED with chrome bezel (PR). Location: [#LOC]. | $784 |
| 5600-0090 | Warning light Federal Signal QuadraFlare QL64XF LED (PR) red. Surface mounted with bezel. Location: [#LOC]. | $632 |
| 5600-0092 | Opticom Emitter 3M #792HF. Emitter with filter and control only. Wire through parking brake. Location: [#LOC]. | $3,144 |
| 5600-0093 | Whelen beacon with halogen rotator and 700 series scene (PR) Model B6TH*Z1P. Dome color: [#COL]. Location [#LOC]. | $1,240 |
| 5600-0094 | Warning light Federal Signal QL64XF LED (PR) amber. Surface mounted with bezel. Location: [#LOC]. | $632 |
| 5600-0098 | Warning light Whelen 600 series Super LED (PR) amber. Location: [#LOC]. | $629 |
| 5600-0099 | Warning light Whelen 600 series Super LED (PR) red. Location: [#LOC]. | $629 |
| 5600-0100 | Warning light Whelen 600 series Super LED (PR) blue with clear lens. Location: [#LOC]. | $629 |
| 5600-0101 | Whelen beacon with halogen rotator and 700 series LED (PR) Model B6TM with amber dome on driver side red dome officer side and [#COL] LEDs. Location [#LOC]. | $1,471 |
| 5600-0105 | Hazard (door ajar) light 2" LED. Location: [#LOC]. | $37 |
| 5600-0106 | Warning light Roto Ray LED with (2) red and (1) clear lights. Locate on front of cab centered below windshield. | $2,886 |
| 5600-0109 | Warning light Whelen 500 series LED (4) red. Surface mounted with weatherproof connector. Flashing lights wired through door ajar. Location: One on each of the interior cab doors (outboard position). | $908 |
| 5600-0111 | Warning light Whelen 600 series Super LED (PR) white with clear lens. Location: [#LOC]. | $711 |
| 5600-0112 | Warning light Whelen 600 series LED (PR) blue. Surface mounted. Location: [#LOC] | $933 |
| 5600-0117 | Whelen Ultra Freedom Micro Edge LED (PR) model MCFLED25 clear lens with red LEDs. Location [#LOC]. | $2,020 |
| 5600-0118 | Warning light Whelen 500 series TIR6 Super LED (PR) red. Surface mounted 5TSMAC bezel with weatherproof connector. Location: [#LOC]. | $531 |
| 5600-0124 | Warning light Code 3 LXEX1F-R LED (PR) red. Surface mounted with bezel. Location: [#LOC] | $732 |
| 5600-0125 | Code3 model 780 LED flasher. Flasher will control lower level warning lights ipo multiplexing | $1,711 |
| 5600-0128 | Warning light Whelen 600 series split Super LED (PR) red/amber. Location: [#LOC] | $814 |
| 5600-0129 | Warning light Whelen 600 series split Super LED (PR) red/clear. Location: [#LOC]. | $876 |
| 5600-0130 | Whelen model UFM8 LED flasher (PR). Flashers will control lower level warning lights ipo internal flashers. Locate (1) in cab and (1) in body. | $1,158 |
| 5600-0131 | Light Whelen model PSR00FRR LED (PR) red. Location: [#LOC]. | $400 |

| Item No. | Description | |
|---|---|---|
| 5600-0132 | Warning light Federal Signal QL64XF LED (PR). (1) red and (1) green. Location: Red driver and green officer in front quad inboard of NFPA warning light | $842 |
| 5600-0133 | Warning light Whelen 900 series Super LED model 90RR5FRR (PR) red. Location: [#LOC]. | $1,235 |
| 5600-0134 | Warning light Whelen 600 series LED red/clear. Surface mounted with weatherproof connector(PR). Location: [#LOC] | $816 |
| 5600-0136 | Federal MicroEscape LED beacon (PR) with [#COL] lenses. Location: [#LOC]. Requires additional upper level warning or Signal Master. | $2,108 |
| 5600-0137 | Warning light Whelen 700 series Super LED (PR) red/clear. Surface mounted with weatherproof connector. Location: [#LOC] | $827 |
| 5600-0138 | Warning light Whelen LIN3 series Super LED (PR) red with clear lens. Surface mounted RFLANGCD bezel with weatherproof connector. Location: [#LOC] | $396 |
| 5600-0139 | Whelen beacon with LED upper beacon and 700 series Super LED (PR) model B6LED with red LEDs/clear domes and [#COL] LEDs/clear lenses. Location: [#LOC]. | $2,975 |
| 5600-0140 | Warning light circuit wiring through chassis reverse. All warning lights. | $81 |
| 5600-0142 | Warning light Whelen 900 series Super LED model 90RA5FCR (PR) split red (bottom) / amber (top) with clear lenses. Location: [#LOC] | $1,235 |
| 5600-0143 | Warning lights Whelen 600 series Super LED (PR) red w/clear lens. Location: [#LOC]. | $629 |
| 5600-0144 | Warning light Whelen 500 series TIR6 Super LED (PR) blue. Surface mounted 5TSMAC bezel with weatherproof connector. Location: [#LOC] | $531 |
| 5600-0147 | Warning light Whelen 600 series LED (PR). Red driver blue officer surface mounted with weatherproof connector. Location: [#LOC] | $873 |
| 5600-0152 | Warning light Whelen 500 series LED (PR) green. Includes switch on pump panel labeled "Ready for Water" Location: (1) centered between grille and windshield on slope (1) driver side (inside of beavertail if so equipped) up high below hosebed opposite officer discharge. | $810 |
| 5600-0153 | Warning light Whelen 600 series split Super LED (PR) red/blue driver red/amber officer. Location: [#LOC]. | $814 |
| 5600-0154 | Warning light Whelen 600 series Super LED (PR). Red driver blue officer surface mounted with weatherproof connector. Location: [#LOC]. | $629 |
| 5600-0156 | Warning light Federal Signal QL64XF LED (PR) green. Surface mounted with bezel. Location: [#LOC]. | $695 |
| 5600-0157 | Federal Model SY12FS Sentry with green dome. Includes switch on driver overhead. Location: pole mounted center rear cab roof. | $408 |
| 5600-0160 | Warning light Federal Signal QL97XF LED (PR) red. Surface mounted with bezel (if applicable). Location: [#LOC]. | $909 |
| 5600-0161 | Warning light Federal Signal QL97XF LED (PR) amber. Surface mounted with bezel (if applicable). Location: [#LOC] | $909 |
| 5600-0162 | Warning light Federal Signal QL64XF LED (PR) blue. Surface mounted with bezel. Location: [#LOC]. | $632 |
| 5600-0164 | Warning light Federal Signal QL64XF LED (PR) white. Surface mounted with bezel. Location: [#LOC]. | $731 |
| 5600-0165 | Warning light Whelen 500 series Super Linear LED (PR) green. Location: [#LOC]. | $560 |
| 5600-0166 | Warning light Whelen 600 series Super LED (PR) green. Location: [#LOC]. | $828 |
| 5600-0168 | Fed QuadraFlare QL97SC-RA Red/Amber split color LED lights located on rear of body up high. Red on top on left side and bottom on right side to simulate "X" pattern. Includes external flasher. | $1,136 |
| 5600-0169 | Warning light Whelen 900 series Super LED driver side amber / officer side red model 90AA5FAR / 90RR5FRR. Location: [#LOC]. | $1,235 |
| 5600-0171 | Warning light Whelen LIN3 series Super LED (PR) amber with clear lens. Surface mounted RFLANGCD bezel with weatherproof connector. Location: [#LOC] | $396 |
| 5600-0173 | Federal MicroEscape NFPA compliant LED beacons (PR) clear lenses with [#COL] LED reflectors. Location: [#LOC]. | $1,574 |
| 5600-0175 | Warning light Whelen 700 series Super LED (PR) red. Location: [#LOC]. | $629 |
| 5600-0176 | Mars 888 pedestal mounted traffic clearing lights with clear lenses located one each side of cab above outer quad bezel. | $1,965 |
| 5600-0177 | Whelen model UFM8 LED flasher (3). Flashers will control warning lights ipo internal flashers. Locate (1) in cab and (2) in body. | $1,736 |
| 5600-0181 | Warning light Federal Signal Model 360501 LED w/ bezel (PR). Surfaced mounted with blue driver and red officer lenses. Location: [#LOC]. | $584 |
| 5600-0182 | Whelen beacon with LED upper beacon and 700 series Super LED (PR) Model B6LED with amber domes and [#COL] LEDs. Location [#LOC] | $2,975 |

| Item No. | Description | |
|---|---|---|
| 5600-0183 | Warning light Whelen 600 series Super LED (PR). blue driver green officer surface mounted with weatherproof connector. Location: [#LOC]. | $730 |
| 5600-0184 | Warning light Federal Signal QL64XF LED (PR). (1) red driver (1) blue officer. Surface mounted with bezel. Location: [#LOC] | $632 |
| 5600-0185 | Federal Model IVP100 Vector pod (PR) located at the rear cab corners. Driver side to be amber with switch on driver's switch panel and automatically turn off when warning lts are on. Officer side to be blue with switch on driver's switch panel. | $803 |
| 5600-0187 | Warning light Federal Signal QL97XF LED (PR). (1) red driver (1) blue officer. Surface mounted with bezel (if applicable). Location: [#LOC]. | $909 |
| 5600-0189 | Federal Intelli model 650205 LED flasher (PR). Flashers will control lower level warning lights ipo internal flashers. Locate (1) in cab and (1) in body. | $918 |
| 5600-0190 | Warning light Whelen 600 series Super LED (PR). Blue driver amber officer surface mounted with weatherproof connector. Location: [#LOC]. | $629 |
| 5600-0191 | Whelen beacon with LED upper beacon and 700 series Super LED (PR) Model B6LED with amber driver and red officer domes and [#COL] LEDs. Location [#LOC]. | $2,975 |
| 5600-0195 | Code3 model XP9501NFPA1 (PR) red LED with clear domes. Location: [#LOC]. | $2,136 |
| 5600-0196 | Fed QuadraFlare QL64SC-RC Red/White split color LED lights in ptd smooth plt alum box above the grille. Red on top on left side and bottom on right side to simulate "X" pattern. Wired to lower zone lighting and switched off with parking brake. Includes ext flasher. | $1,679 |
| 5600-0197 | Warning light Whelen 600 series Super LED (PR). red driver green officer surface mounted with weatherproof connector. Location: [#LOC]. | $730 |
| 5600-0198 | Whelen PE215 emitter. Emitter and control only. Wire through parking brake. Location: [#LOC]. | $904 |
| 5600-0199 | Whelen beacon with LED upper beacon and 700 series Super LED (PR) Model B6LED with red driver and blue officer domes and [#COL] LEDs. Location [#LOC]. | $2,975 |
| 5600-0200 | Whelen beacon with LED upper beacon and 700 series Super LED (PR) Model B6LED with red driver and amber officer domes and [#COL] LEDs. Location [#LOC]. | $2,975 |
| 5600-0201 | Warning light Whelen 900 series Super LED model 90RB5FCR (PR) split red / blue with clear lense. Location: [#LOC]. | $1,235 |
| 5600-0202 | Warning light Weldon Diamondback V46W-C00R LED (PR) red w/ clear lenses. Includes diamond plate mounting box. Location: [#LOC]. | $961 |
| 5600-0205 | Warning light Federal Signal GL1F-B LED (PR) blue. Location: [#LOC]. | $598 |
| 5600-0213 | Whelen beacon with halogen rotator and 700 series LED (PR) Model B6TM with red dome on driver side amber dome officer side and [#COL] LEDs. Location [#LOC]. | $1,471 |
| 5600-0215 | Power Arc (PR) Model LED210 yellow with clear lenses. Location: [#LOC]. | $1,303 |
| 5600-0216 | Warning light Whelen M9 series Super LED (PR) red. Location: [#LOC]. | $1,423 |
| 5600-0217 | Power Arc (PR) Model LED210 red with clear lenses. Location: [#LOC]. | $1,303 |
| 5600-0223 | Warning light Code 3 378ABZ LED (PR) amber. Surface mounted with bezel. Location: [#LOC]. | $711 |
| 5600-0226 | Warning light Federal Signal Model 360501-04 LED w/ bezel (PR). Surfaced mounted with red lens. Location: [#LOC]. | $418 |
| 5600-0227 | Warning light Whelen 600 series Super LED (PR). Red driver blue officer surface mounted with clear lenses and weatherproof connector. Location: [#LOC]. | $629 |
| 5600-0228 | Warning light Whelen 900 series Super LED (PR) with clear lenses. (1) model 90RR5FCR red driver and (1) model 90BB5FCR blue officer. Each light shall have a clear lense w/ colored LEDs. Location: [#LOC]. | $1,235 |
| 5600-0229 | Warning light Whelen 500 series TIR6 Super LED (PR) red driver blue officer with clear lenses. Surface mounted 5TSMAC bezel with weatherproof connector. Location: [#LOC] | $531 |
| 5600-0230 | Warning light Whelen 600 series Super LED (PR) blue with blue lens. Location: [#LOC]. | $629 |
| 5600-0234 | Warning light Whelen Dominator series LED model D844000 red driver/blue officer with clear lenses. Location: [#LOC]. Wire through lower level warning. | $946 |
| 5600-0236 | Whelen beacon with LED upper beacon and 700 series Super LED (PR) model B6LED with blue driver and red officer domes and [#COL] LEDs. Location: [#LOC]. | $2,975 |
| 5600-0237 | Warning light Whelen M7RC Linear Super LED (PR) red with clear lense. Location: [#LOC]. | $698 |
| 5600-0238 | Warning light Whelen 600 series Super LED (PR). (1) red steady burn front driver side below windshield and (1) flashing amber driver side above tail lights to meet California DOT requirements. | $629 |
| 5600-0240 | Warning light Whelen M4R LED (4) red. Surface mounted with weatherproof connector. Flashing lights wired through door ajar. Location: One on each of the interior cab doors (outboard position). | $1,244 |
| 5600-0241 | Warning light Whelen M6R series Linear Super LED (PR) red. Location: [#LOC]. | $718 |
| 5600-0242 | Warning light Whelen M6 series Linear Super LED (PR) split red/amber with clear lens. Location: [#LOC]. | $787 |

| Item No. | Description | |
|---|---|---|
| 5600-0243 | Warning light Whelen 500 series split TIR6 Super LED (PR) red/amber. Surface mounted 5TSMAC bezel with weatherproof connector. Location: [#LOC]. | $608 |
| 5600-0245 | Warning light Federal Signal QL64XF LED (PR) red with clear lens. Surface mounted with bezel. Location: [#LOC] | $632 |
| 5600-0248 | Warning light Whelen M9 series Super LED (PR) red driver blue officer with clear lenses. Location: [#LOC]. | $1,423 |
| 5600-0249 | Warning light Whelen M6 series Linear Super LED (PR) red driver blue officer with clear lenses. Location: [#LOC]. | $718 |
| 5600-0250 | Whelen beacon with LED upper beacon and 700 series Super LED (PR) Model B6LED with red LED/clear dome driver and blue LED/clear dome officer and [#COL] LEDs/clear lenses. Location: [#LOC]. | $2,975 |
| 5600-0251 | 3m Opticom GPS vehicle system kit. Includes antenna radio and control unit. Wired through park brake. | $8,655 |
| 5600-0252 | Hazard (door ajar) light Federal Signal Fire Bolt strobe. Location: [#LOC]. | $252 |
| 5600-0253 | Warning light Federal Signal QL97XF LED (PR). (1) red driver (1) amber officer. Surface mounted with bezel (if applicable). Location: [#LOC] | $909 |
| 5600-0254 | Warning light Federal Signal QL97XF LED (PR). (1) amber driver (1) red officer. Surface mounted with bezel (if applicable). Location: [#LOC] | $909 |
| 5600-0255 | Warning light Whelen 900 series Super LED driver side red model (90RR5FRR) / officer side amber (90AA5FAR). Location: [#LOC] | $1,235 |
| 5600-0256 | Warning light Whelen M-Series Super LED model M9J (PR) red/blue. Surface mounted with weatherproof connector. Location: [#LOC]. | $1,423 |
| 5600-0257 | Warning light Whelen M6 series Linear Super LED (PR) split red/blue with clear lens. Location: [#LOC]. | $787 |
| 5600-0258 | Warning light Whelen M9RC series Super LED (PR) red with clear lens. Location: [#LOC]. | $1,207 |
| 5600-0259 | Warning light Whelen M6BC series Linear Super LED (PR) blue with clear lens. Location: [#LOC]. | $718 |
| 5600-0264 | Whelen beacon with LED upper beacon and 700 series Super LED (PR) Model B6LED with blue LED/clear dome driver and red LED/clear dome officer and 700 series [#COL] LEDs/clear lenses. Location: [#LOC]. | $2,975 |
| 5600-0266 | Whelen Super LED beacon (PR) model L31H with red driver blue officer LED and clear domes. Location rear upper body on aerial style brackets. | $1,942 |
| 5600-0267 | Warning light Whelen Dominator series LED with red driver/blue officer with clear lenses. Location: [#LOC]. Wire through lower level warning. | $962 |
| 5600-0268 | Mars 888 pedestal mounted traffic clearing light located one each side of cab outboard above the outer quad bezel on contoured pedestal bracket. Lens color(s): driver red officer clear. | $2,343 |
| 5600-0269 | Whelen Super LED beacon (PR) model L31H with red driver amber officer LED and clear domes. Location [#LOC]. | $1,942 |
| 5600-0270 | Warning light Whelen 500 series vetical linear Super LED (PR) red with clear lens. Surface mounted with weatherproof connector. Location: [#LOC]. | $629 |
| 5600-0271 | Warning light Whelen 500 series TIR6 Super LED (PR) red with clear lens. Surface mounted 5TSMAC bezel with weatherproof connector. Location: [#LOC]. | $531 |
| 5600-0272 | Hazard (door ajar) light Federal Signal 2.5" LED model 607120-04. Location: [#LOC]. | $61 |
| 5600-0273 | Warning light Whelen 900 series Super LED (PR). (1) model 90RR5FCR red driver and (1) model 90BB5FCR blue officer. Each light shall have a clear lense w/ colored LEDs. Location: side facing (1) each side upper front body panels and side facing (1) each side upper rear body panels. | $1,235 |
| 5600-0274 | Warning light Whelen 900 series Super LED (PR). (1) model 90RR5FCR red driver and (1) model 90BB5FCR blue officer. Each light shall have a clear lense w/ colored LEDs. Location: Rear facing up high on the rear one above each other. | $1,235 |
| 5600-0275 | Warning light Whelen M6AC series Linear Super LED (PR) amber with clear lens. Location: [#LOC]. | $718 |
| 5600-0276 | Whelen Ultra Freedom Micro Edge LED (PR) model MCFLED clear lens with amber driver / red officer LEDs. Location [#LOC]. | $2,020 |
| 5600-0277 | Warning light Whelen M6C series Linear Super LED (PR) white. Location: [#LOC]. | $718 |
| 5600-0284 | Whelen Super LED beacon (PR) model L31H with blue driver red officer LED and clear domes. Location [#LOC]. | $1,942 |
| 5600-0285 | Warning light Roto-Ray LED with (1) red (1) blue and (1) clear lenses. Locate on front of cab centered below windshield. | $2,886 |
| 5600-0286 | Warning light Whelen M6RC series Super LED (PR) red with clear lens. Location: [#LOC]. | $686 |

| Item No. | Description | |
|---|---|---|
| 5600-0287 | Warning light Whelen Dominator Plus model DP880000 with (8) red LINZ6 LEDs. Location: [#LOC]. Wire through lower level warning. | $1,580 |
| 5600-0289 | Warning light Whelen 900 series Super LED model 90BB5FBR (PR) blue. Location: [#LOC]. | $1,235 |
| 5600-0290 | Warning light Whelen 600 series Super LED (PR) red with diamond plate mounting boxes. Location: [#LOC]. | $808 |
| 5600-0291 | Warning light Roto Ray LED with (1) red (1) green and (1) white lights. Locate on front of cab centered below windshield. | $2,886 |
| 5600-0292 | Warning light Whelen 900 series Super LED model 90RR5FRC (PR) red w/ clear lens. Location: [#LOC]. | $1,235 |
| 5600-0294 | Warning light Federal Signal IMPAXX model IPX600-R red LED w/ bezel (PR). Surfaced mounted with clear lens. Location: [#LOC]. | $486 |
| 5600-0297 | Warning light Whelen Dominator series LED model D860020 red/white. Includes R/W/R/R/R/R/W/R LEDs with clear lenses. Location: [#LOC]. Wire through lower level warning. | $949 |
| 5600-0298 | Warning light Power Arc model M90FK-W LED (PR). Color: White. Location: [#LOC]. | $1,040 |
| 5600-0299 | Warning light Federal Signal IMPAXX LED model IPX302-4 w/ bezel (PR). Surfaced mounted with red lens. Location: [#LOC]. | $334 |
| 5600-0301 | Warning light Whelen M2 Super LED warning lights. Includes (2) red M2R LED light heads w/chrome flanges (if applicable). Location: [#LOC]. | $572 |
| 5600-0302 | Warning light Whelen M2 Super LED warning lights. Includes (2) red M2RC LED light heads with clear lenses and chrome flanges (if applicable). Location: [#LOC]. | $572 |
| 5600-0305 | Warning light Whelen M6 series Linear Super LED (PR) amber driver red officer with clear lenses. Location: [#LOC]. | $718 |
| 5600-0306 | Opticom Emitter 3M 794H. LED emitter and control only. Location and activation: [#LOC]. | $2,420 |
| 5600-0307 | Warning light Whelen 600 series LED (PR) with clear lens. Red driver blue officer surface mounted with weatherproof connector. Location: [#LOC] | $873 |
| 5600-0309 | Warning light Whelen Vertex Super LED warning lights. Includes (2) red model VTX609R LED light heads with clear lens w/chrome flanges model VTXFC. Location: [#LOC]. | $536 |
| 5600-0310 | Warning light Whelen M6 series Linear Super LED (PR) split red/clear with clear lens. Location: [#LOC]. | $787 |
| 5600-0312 | Light Whelen model PSA00FAR LED (PR) amber. Location: [#LOC]. | $400 |
| 5600-0313 | Warning light Whelen 900 series Super LED with clear lens model 90BB5FCR (PR) blue. Location: [#LOC]. | $1,235 |
| 5600-0314 | Federal Signal Vision LED rotating beacons model VSLR-IPX-R1R21 with rear facing IPX6 red LED warning light (Requires additional rear facing warning lights for NFPA compliance). Location: [#LOC]. | $2,430 |
| 5600-0315 | Whelen Micro Liberty LED (PR) (1) driver Model MCSLED2R clear lense with red LEDs and (1) officer MCSLED2B clear lense with blue LEDs. Location: [#LOC]. | $1,701 |
| 5600-0316 | Warning light Whelen M4AC Super-LED lights (PR) amber with clear lenses. Location: [#LOC]. | $921 |
| 5600-0317 | Whelen Super LED beacon (PR) model L31H with red driver blue officer LED and clear domes. Location: [#LOC]. | $1,942 |
| 5600-0320 | Warning light Whelen ION series Super LED (2) red and (1) white with clear lens. Location: [#LOC]. | $951 |
| 5600-0321 | Mars 888 pedestal mounted traffic clearing light located one each side of cab outboard above the outer quad bezel on contoured pedestal brkt. Lens color: clear. | $2,343 |
| 5600-0322 | Warning light Whelen M7D series Linear Super LED (PR) split red/clear with clear lens. Location: [#LOC]. | $797 |
| 5600-0327 | Warning light Whelen Dominator series LED model D880000 red with clear lenses. Location: [#LOC]. Wire through lower level warning. | $946 |
| 5600-0328 | Warning light Whelen M7 series Linear Super LED (PR) white light with clear lens. Location: [#LOC]. | $698 |
| 5600-0330 | Warning light Federal Signal IMPAXX model IPX602-R red LED w/ bezel (PR). Surfaced mounted with red lens. Location: [#LOC]. | $486 |
| 5600-0331 | Federal Signal Vision LED rotating beacons model VSLR-R with red LED warning light(s) and red lenses (Requires additional rear facing warning lights for NFPA compliance). Location: [#LOC]. | $1,816 |
| 5600-0332 | Mars 888 pedestal mounted traffic clearing light located (1) each side of cab outboard above the outer quad bezel on contoured pedestal bracket. Driver side red officer side clear. | $2,343 |
| 5600-0333 | Warning light Whelen M9 series Super LED (PR) red driver amber officer. Location: [#LOC]. | $1,423 |
| 5600-0334 | Warning light Whelen IONWR series Super LED red in color. Location: [#LOC]. | $654 |
| 5600-0336 | Warning light Roto Ray LED with (1) red (1) amber and (1) clear lights. Locate on front of cab centered below windshield. | $2,886 |

| Item No. | Description | |
|---|---|---|
| 5600-0338 | Warning light Whelen M9 series Super LED (PR) red officer amber driver. Location: [#LOC]. | $1,423 |
| 5600-0339 | Warning light Whelen 600 series Super LED (PR). Red officer blue driver surface mounted with weatherproof connector. Location: [#LOC]. | $629 |
| 5600-0340 | Warning light Whelen M6 series Linear Super LED (PR) red driver blue officer. Location: [#LOC]. | $718 |
| 5600-0341 | Warning light Whelen 600 series split Super LED (PR) red/blue with clear lens. Location: [#LOC]. | $814 |
| 5600-0342 | Whelen beacon with LED upper beacon and 700 series Super LED (PR) Model B6LED with blue driver and amber officer domes and [#COL] LEDs. Location [#LOC]. | $2,975 |
| 5600-0345 | Warning light Federal Signal IMPAXX LED model IPX300-4 w/ bezel (PR). Surfaced mounted red LEDs with clear lens. Location: [#LOC]. | $334 |
| 5600-0347 | Warning light Whelen 900 series Super LED blue driver amber officer. Location: [#LOC]. | $1,235 |
| 5600-0350 | Hazard (door ajar) light Whelen Vertex red LED model VTX609R w/chrome bezel. Location: [#LOC]. | $270 |
| 5600-0352 | Warning light Whelen M6G series Linear Super LED (PR) green. Location: [#LOC]. | $922 |
| 5600-0354 | Warning lights Whelen LINZ6 LEDs (PR) red in color with chrome bezels if applicable. Location: [#LOC]. | $479 |
| 5600-0355 | Whelen beacon with LED upper beacon and 700 series Super LED (PR) Model B6LED with blue domes and [#COL] LEDs. Location: [#LOC]. | $2,975 |
| 5600-0357 | Warning light Whelen M6 series Linear Super LED (PR) red driver green officer. Location: [#LOC]. | $718 |
| 5600-0358 | Warning light Federal Signal Viper EXT Model VPX802-4 LED w/ bezel rear upper level package. Includes (9) surfaced mounted with red lens; (5) up high rear of body and (2) side facing on each side of body up high and rearward (as applicable). | $2,560 |
| 5600-0359 | Warning light Federal Signal IMPAXX LED model IPX302 w/ bezel (PR) (driver blue officer red). Surfaced mounted with colored lens. Location: [#LOC]. | $334 |
| 5600-0360 | Warning light Federal Signal QuadraFlare QL64XF LED (EA) red. Light to be steady burn to meet California DOT requirements. Surface mounted with bezel. Location: [#LOC]. | $282 |
| 5600-0362 | Power Arc beacon (PR) Model LEDB210 with [#COL] domes. Location: [#LOC]. | $1,280 |
| 5600-0364 | Warning light Roto Ray LED with (2) green and (1) clear lights. Locate on front of cab centered below windshield. | $2,886 |
| 5600-0366 | Warning light Whelen 500 series TIR6 Super LED (2) blue and (3) amber. Surface mounted 5TSMAC bezel with weatherproof connector. Lights to activate when park brake is set in blocking mode. Location: [#LOC]. | $1,326 |
| 5600-0367 | Warning light Whelen 600 series Super LED (PR) amber with clear lens. Location: [#LOC]. | $629 |
| 5600-0368 | Warning light Whelen M6A series Linear Super LED (PR) amber. Location: [#LOC]. | $718 |
| 5600-0370 | Warning light Whelen M-Series Super LED model M9AC (PR) amber with clear lens. Surface mounted with weatherproof connector. Location: [#LOC]. | $1,207 |
| 5600-0371 | Whelen Ultra Freedom Micro Edge LED (PR) model MCFLED2RB clear lens with (1) red/(1) blue LEDs. Location: [#LOC]. | $2,020 |
| 5600-0372 | Light Code 3 model DB2-2PZNFPA2 (PR) with clear lenses. Located: [#LOC]. | $2,027 |
| 5600-0373 | Warning Light Code3 model #65BZCB blue LED with clear lens and chrome bezel (PR). Location: [#LOC]. | $1,129 |
| 5600-0374 | Warning light Federal Signal QL64XFC LED (PR) blue with clear lenses. Surface mounted with bezel. Location: [#LOC]. | $632 |
| 5600-0375 | Warning light Federal Signal IMPAXX model IPX600-B blue LED w/ bezel (PR). Surfaced mounted with clear lens. Location: [#LOC]. | $486 |
| 5600-0377 | Federal Signal Vision LED rotating beacons model VSLR-R2A02 with rear facing IPX6 amber LED warning light. Location: [#LOC]. | $2,430 |
| 5600-0378 | Warning light Code 3 65BZCR LED (PR) Red with clear lens. Surface mounted with bezel. Location: [#LOC] | $598 |
| 5600-0379 | Warning light Federal Signal QL97XFC-R LED (PR) red with clear lenses. Surface mounted with bezel (if applicable). Location: [#LOC]. | $909 |
| 5600-0380 | Warning light Federal Signal QL64SFC split LED (PR) driver red/clear officer red/green. Surface mounted with bezel. Location: [#LOC]. | $795 |
| 5600-0381 | Hazard (seat belt warning) blue light 2" LED. Location: Adjacent to door ajar light. | $37 |
| 5600-0383 | Warning light Whelen 900 series Super LED (PR). (1) model 90RR5FRR red driver and (1) model 90BB5FBR blue officer. Location: [#LOC]. | $1,235 |
| 5600-0385 | Whelen Super LED ROTA-BEAM beacon (PR) model R316 Series [#COL] domes. Location [#LOC]. | $2,115 |
| 5600-0386 | Warning light Whelen M2 Super LED warning lights. Includes (2) amber M2A LED light heads w/chrome flanges (if applicable). Location: [#LOC]. | $572 |

| Item No. | Description | |
|---|---|---|
| 5600-0388 | Hazard (light tower ajar) amber light 2" LED. Location: [#LOC]. | $37 |
| 5600-0389 | Warning light Whelen M4RC Super-LED lights (PR) red with clear lenses. Location: [#LOC]. | $550 |
| 5600-0390 | Mars 888 LED pedestal mounted traffic clearing light located one each side of cab outboard above the outer quad bezel on contoured pedestal brkt. Lens color: clear. | $3,716 |
| 5600-0391 | Warning light Whelen M4R Super-LED lights (PR) red. Location: [#LOC]. | $550 |
| 5600-0392 | Whelen Ultra Freedom Micro Edge LED (PR) model MCFLED2 clear lens with blue driver / red officer LEDs. Location (1) each side of body on rearward compartment top. | $1,968 |
| 5600-0393 | Warning light Whelen M6GC series Linear Super LED (PR) green with clear lenses. Location: [#LOC]. | $733 |
| 5600-0395 | Warning light Whelen M-Series Super LED model M9K (PR) red/amber. Surface mounted with weatherproof connector. Location: (1) on each side up high rear of body. | $1,423 |
| 5600-0396 | Warning light Whelen Dominator series LED model D66000 red with clear lenses. Location: [#LOC]. Wire through lower level warning. | $839 |
| 5600-0397 | Warning light Whelen WIONA series Super LED amber in color (ea). Locate rear of body below directional lightbar wired through reverse. | $327 |
| 5600-0398 | Warning light Whelen 500 series TIR6 Super LED (PR)1-red driver 1-green officer. Surface mounted 5TSMAC bezel with weatherproof connector. Location: [#LOC]. | $531 |
| 5600-0399 | Warning light Whelen M9 series Super LED (PR) red with diamond plate mounting boxes. Location: [#LOC]. | $1,523 |
| 5600-0400 | Warning light Whelen IONWA series Super LED amber in color. Location: [#LOC]. | $654 |
| 5600-0401 | Warning light Whelen M6B series Linear Super LED (PR) blue. Location: [#LOC]. | $718 |
| 5600-0402 | Warning light Whelen M9 series Super LED (PR) blue driver red officer with clear lenses. Location: [#LOC]. | $1,423 |
| 5600-0404 | Whelen beacon with LED upper beacon and 700 series Super LED (PR) Model B6LED with amber LED/clear dome driver and red LED/clear dome officer and [#COL] LEDs/clear lenses. Location: [#LOC]. | $2,975 |
| 5600-0405 | Warning light Whelen M9 series Super LED (PR) red with (1) officer side diamond plate mounting box. Location: driver side facing uppper body corner officer rear compartment top outboard. | $1,476 |
| 5600-0406 | Warning light Whelen 500 series TIR6 Super LED (2) blue and (3) red. Surface mounted 5TSMAC bezel with weatherproof connector. Lights to activate when park brake is set in blocking mode. Location: [#LOC]. | $1,326 |
| 5600-0407 | Whelen Ultra Freedom Micro Edge LED (PR) model MCFLED red lens with red LEDs. Location [#LOC]. | $2,020 |
| 5600-0408 | Warning light Federal Signal QL97XF LED (PR) red with diamond plate mounting box. Surface mounted with bezel (if applicable). Location: [#LOC]. | $1,088 |
| 5600-0409 | Whelen beacon with LED upper beacon and 700 series Super LED (PR) model B6LED with red domes and 700 series Super LED scene lights rear facing. Location: [#LOC]. | $3,139 |
| 5600-0410 | Warning light Whelen 600 series Super LED (PR) red with black flange. Location: [#LOC]. | $629 |
| 5600-0411 | Install customer supplied Opticom GPS system. Labor only; all components to be provided. See sales for locations. | $772 |
| 5600-0412 | Warning light Federal Signal QL64XF LED (EA) white. Surface mounted with bezel. Location: [#LOC]. | $367 |
| 5600-0414 | Warning light Whelen 900 series Super LED (PR). (1) model 90RR5FRR red officer and (1) model 90BB5FBR blue driver. Location: [#LOC]. | $1,235 |
| 5600-0415 | Warning/Scene light Whelen M9V2R Super LED (PR) red. Location: [#LOC]. | $2,072 |
| 5600-0417 | Enclose bottom of aerial style bracket for no exposed wiring. | $97 |
| 5600-0418 | Warning light Whelen 500 series TIR6 Super LED red. Surface mounted 5TSMAC bezel with weatherproof connector. Light to be steady burn while the parking brake is disengaged. Location: Centered in front cab grill | $309 |
| 5600-0419 | Mars 888 LED pedestal mounted traffic clearing light located one each side of cab outboard above the outer quad bezel on contoured pedestal brkt. Lens color: Red. | $3,716 |
| 5600-0420 | Power Arc (PR) Model LED210 driver blue officer red. Location: [#LOC]. | $1,303 |
| 5600-0421 | Whelen beacon with Rota-Beam LED upper beacon and M7 series Super LED (PR) model B63M7 with red domes and [#COL] LEDs. Location: [#LOC]. | $3,226 |
| 5600-0422 | Warning light Whelen WIONR series Super LED red in color (PR). Locate [#LOC]. | $584 |
| 5600-0423 | Warning light Whelen Rota-Beam series model 6RBRC Super LED (PR) red with clear lenses. Location: [#LOC]. | $1,003 |
| 5600-0424 | Warning light Whelen M6 series Linear Super LED (PR) blue driver red officer with clear lenses. Location: [#LOC]. | $718 |

| Item No. | Description | |
|---|---|---|
| 5600-0425 | Code 3 / PSE Oscilaser warning light red (PR). Lights are to be located on front of cab above quad bezels. | $654 |
| 5600-0426 | Warning/Scene light Whelen M9V2 Super LED (PR) red driver blue officer with clear lenses. Location: [#LOC]. | $2,072 |
| 5600-0427 | Warning light Whelen M9 series Super LED (PR) blue driver red officer. Location: [#LOC]. | $1,423 |
| 5600-0428 | Warning light Whelen 500 series split TIR6 Super LED (PR) red/blue. Surface mounted 5TSMAC bezel with weatherproof connector. Location: [#LOC]. | $608 |
| 5600-0429 | Warning/Scene light Whelen M9V2 Super LED (PR) red driver blue officer. Location: [#LOC]. | $2,072 |
| 5600-0430 | Whelen Rota-Beam LED lights (3) red/blue/red with clear lenses and smooth plate mounting box painted upper 2-tone job color. Location: centered below windshield. | $1,917 |
| 5600-0431 | Warning light Whelen 600 series Super LED (PR). Amber driver blue officer surface mounted with weatherproof connector and clear lenses. Location: [#LOC]. | $629 |
| 5600-0432 | Warning light Whelen 600 series Super LED (PR). Red officer blue driver surface mounted with clear lenses and weatherproof connector. Location: [#LOC]. | $629 |
| 5600-0433 | Power Arc (PR) Model LED180 blue. Location: [#LOC]. | $1,303 |
| 5600-0435 | Light Whelen PS strip LED (PR) red driver blue officer with clear lenses. Location: [#LOC]. | $559 |
| 5600-0436 | Federal Signal Sentry branch guard (PR). | $163 |
| 5600-0437 | Hazard (door ajar) light Whelen M2WR red LED w/black bezel. Location: [#LOC]. | $286 |
| 5600-0438 | Warning light Whelen 5V1R Super LED (PR) red with chrome flange (as applicable). Surface mounted with weatherproof connector. Location: [#LOC]. | $864 |
| 5600-0439 | Warning light Whelen Rota-Beam series model 6RBB Super LED (PR) blue. Location: [#LOC]. | $1,003 |
| 5600-0440 | Warning light Whelen Rota-Beam series model 6RBR Super LED (PR) red. Location: [#LOC]. | $1,003 |
| 5600-0441 | Warning light Whelen 500 series TIR6 Super LED (PR) amber. Surface mounted 5TSMAC bezel with weatherproof connector. Location: [#LOC]. | $531 |
| 5600-0442 | Warning light Whelen M9RC series Super LED (PR) red with clear lens and black housing. Location: [#LOC]. | $1,207 |
| 5600-0443 | Warning/Scene light Whelen M9V2 Super LED (PR) red driver blue officer. Includes black bezels. Location: [#LOC]. | $2,072 |
| 5600-0444 | Door mounted warning light Truck-Lite amber LED (PR). Compartment L5/R5 upper and lower outboard (to alternate flash). Wired through door ajar circuit. | $244 |
| 5600-0445 | Warning light Roto Ray LED with (1) red (1) amber and (1) green lights. Locate on front of cab centered below windshield. | $2,886 |
| 5600-0446 | Warning light Whelen M2 Super LED warning lights. Includes (2) blue M2BC LED light heads (blue LEDs clear lens) w/chrome flanges (if applicable). Location: [#LOC]. | $572 |
| 5600-0447 | Whelen beacon with Rota-Beam LED upper beacon and M7 series Super LED (PR) model B63M7 with red domes/clear lenses and [#COL] LEDs. Location: [#LOC]. | $3,226 |
| 5600-0448 | Warning light Whelen Rota-Beam series model 6RB Super LED (PR) driver blue officer red. Location: [#LOC]. | $1,003 |
| 5600-0449 | Warning light Whelen WIONK series Super LED split red/amber in color (PR). Locate [#LOC]. | $584 |
| 5600-0450 | Warning light Whelen WIOND series Super LED split red/clear in color (PR). Locate [#LOC]. | $584 |
| 5600-0451 | Warning light Whelen 600 series Super LED. Four (4) red LEDs with smooth plate mounting boxes painted job color (boxes are as required dependent upon location). All four (4) lights shall be activated from a single dash mounted rocker switch. Location: One (1) pair mounted on the cab brow. One (1) pair mounted on or near the corner of the front bumper one (1) each side. | $1,764 |
| 5600-0452 | Warning light Federal Signal QL97XF LED (PR). (1) blue driver (1) red officer. Surface mounted with bezel (if applicable). Location: [#LOC]. | $909 |
| 5600-0453 | Fed QuadraFlare QL97SF-RB Red/Blue split color LED lights. Surface mounted with bezel (if applicable). Location: [#LOC]. | $1,136 |
| 5600-0454 | Warning light Whelen 900 series Super LED driver side red model (90RR5FCR) / officer side amber (90AA5FCR) with clear lenses. Location: [#LOC] | $1,235 |
| 5600-0455 | Warning light Whelen 900 series Super LED driver side amber model (90AA5FCR) / officer side red (90RR5FCR). Location: [#LOC] | $1,235 |
| 5600-0456 | Tomar Scorpion LED beacon (PR) model BCN-CR1 with clear domes. Location: [#LOC]. | $1,882 |
| 5600-0457 | Mars 888 LED pedestal mounted traffic clearing light on front of cab centered below windshield. Lens color: clear. | $1,670 |
| 5600-0458 | Warning light Whelen Vertex Super LED warning lights. Includes (2) split red/clear model VTX609D LED light heads with clear lenses and chrome flanges. Location: [#LOC]. | $536 |
| 5600-0459 | Warning light Whelen M-Series Super LED model M9K (PR) red/amber. Surface mounted with weatherproof connector. Location: [#LOC]. | $1,423 |

| Item No. | Description | |
|---|---|---|
| 5600-0460 | Mars 888 pedestal mounted traffic clearing light located one each side of cab outboard of the outer quad bezel on contoured pedestal bracket. Lens color(s): driver red officer clear. | $2,343 |
| 5600-0461 | Warning light Whelen WIONSM series Super LED driver split red/green officer split red/amber in color (PR). Locate (1) each side rear facing centered between DOT lights and corner in rubrail if equipped. | $586 |
| 5600-0462 | Warning light Whelen M6 series Linear Super LED (PR) red driver green officer with clear lenses. Location: [#LOC]. | $718 |
| 5600-0463 | Warning light Federal Signal Viper EXT model VPX800-4 red LED w/ bezel (PR). Surfaced mounted with clear lens. Location: [#LOC]. | $570 |
| 5600-0464 | Warning light Power Arc model M90 LED (PR). Color: Red. Location: [#LOC]. | $1,040 |
| 5600-0465 | Warning light Whelen M9BC series Super LED (PR) blue with clear lens. Location: [#LOC]. | $1,207 |
| 5600-0467 | Whelen beacon with LED upper beacon and M7 series Super LED (PR) model B6LED with driver amber officer red domes and [#COL] LEDs. Location: [#LOC]. | $3,042 |
| 5600-0468 | Warning/ground light Whelen M6V2RC series Linear Super LED (PR) red with clear lenses. Location: [#LOC]. | $1,494 |
| 5600-0469 | Warning light Roto Ray LED with (2) red w/ clear lenses and (1) clear lights. Locate on front of cab centered below windshield. | $2,886 |
| 5600-0470 | Whelen beacon with Rota-Beam LED upper beacon and 700 series Super LED (PR) model B6370 with red domes and [#COL] LEDs. Location: [#LOC]. | $3,157 |
| 5600-0471 | Diamond plate shield above officer side rear beacon. | $229 |
| 5600-0472 | Federal Signal Vision LED rotating beacons model VSLR with driver red LED warning light and officer amber LED warning light. (Requires additional rear facing warning lights for NFPA compliance). Location: [#LOC]. | $1,816 |
| 5600-0473 | Warning light Whelen WIONL series Super LED split red/green in color (PR). Locate [#LOC]. | $666 |
| 5600-0474 | Hazard (door ajar) light Whelen 700 series Super LED (PR) w/chrome bezel. Driver doors red officer doors amber. Location: AC cover. | $629 |
| 5600-0475 | Warning light Whelen WIONSMCR series Super LED red. Location: [#LOC]. | $584 |
| 5600-0477 | Light Whelen model PSB00FBR LED (PR) blue. Location: [#LOC]. | $663 |
| 5600-0478 | Warning light Whelen M4D Super-LED lights (PR) red-clear split lenses. Location: [#LOC]. | $709 |
| 5600-0480 | Warning light Whelen Dominator series LED model D63030 red/white with clear lenses. Location: [#LOC]. Wire through lower level warning. | $839 |
| 5600-0481 | Code3 Arch model A36 [#COL] LED beacon (PR). Location: [#LOC]. | $2,375 |
| 5600-0482 | Warning light Whelen WIONSMCD Super LED (3) split red/clear. Location: [#LOC]. | $951 |
| 5600-0483 | Code3 Arch model A36 [#COL] LED beacon (PR). Location: [#LOC]. | $2,375 |
| 5600-0484 | Warning light Power Arc model M90SM LED (PR). Color: [#COL] . Location: [#LOC]. | $1,136 |
| 5600-0485 | Warning light Federal Signal QL64SFC split LED (PR) red/blue. Surface mounted with bezel. Location: [#LOC]. | $629 |
| 5600-0486 | Warning light Whelen 500 series TIR6 Super LED (2) amber and (3) red. Surface mounted 5TSMAC bezel with weatherproof connector. Lights to activate when park brake is set in blocking mode. Location: rear of body below hosebed. | $1,326 |
| 5600-0487 | Warning light bezel (PR). Fabricated bezel on radius cab corner painted job color. | $405 |
| 5600-0488 | Warning/Scene light Whelen M9V2RC Super LED (PR) red with clear lenses. Location: [#LOC]. | $2,072 |
| 5600-0490 | Warning light Whelen M9RC series Super LED (PR) red with clear lenses and diamond plate mounting boxes. Location: [#LOC]. | $1,523 |
| 5600-0491 | Warning light Whelen Micron Super LED (PR) split red/clear. Surface mounted chrome bezel with weatherproof connector. Location: [#LOC]. | $564 |
| 5600-0492 | Warning light Whelen Micron Super LED (PR) split red/amber. Surface mounted chrome bezel with weatherproof connector. Location: [#LOC]. | $564 |
| 5600-0493 | Mars 888 LED pedestal mounted traffic clearing light located one each side of cab outboard above the outer quad bezel on contoured pedestal brkt. Lens color: driver red officer clear. | $3,716 |
| 5600-0495 | Warning light Whelen 600 series Super LED (PR). Red driver amber officer surface mounted with weatherproof connector. Location: [#LOC]. | $629 |
| 5600-0496 | Warning light Whelen M9 series Super LED (PR) red driver blue officer. Location: [#LOC]. | $1,423 |
| 5600-0497 | Diamond plate warning/scene light mounting box full compartment top depth (PR). Location: [#LOC]. | $425 |
| 5600-0498 | Painted smooth plate warning/scene light mounting box (two-tone if equipped). Location: [#LOC]. | $425 |
| 5600-0499 | Warning/ground and/or scene light Whelen M6V2R series Linear Super LED (PR) red. Location: [#LOC]. | $1,494 |
| 5600-0500 | Warning light Whelen M6 series Super LED (PR) red/amber driver red/blue officer. Surface mounted with weatherproof connector. Location: [#LOC]. | $787 |

| Item No. | Description | |
|---|---|---|
| 5600-0501 | Federal 10" Navigator LED beacons (PR) clear lenses with (2) red (1) red/amber LED reflectors. Location: [#LOC]. | $2,028 |
| 5600-0502 | Warning light Federal Signal Micro Pulse model MPS1200U-RR red LED w/ bezel (PR). Location: [#LOC]. | $473 |
| 5600-0503 | Light Whelen PS strip LED (PR) blue driver red officer with clear lenses. Location: [#LOC]. | $559 |
| 5600-0504 | Warning/ground light Whelen M6V2 series Linear Super LED (4); (2) red (2) amber alternating. Wired through lower level warning scene lights wired through park brake and reverse. Location: center rear of body above B1. | $2,987 |
| 5600-0505 | Hazard (park brake set) light 2" amber LED. Location: [#LOC]. | $37 |
| 5600-0506 | Warning light Whelen M9 series Super LED (PR) red officer amber driver with clear lenses. Location: [#LOC]. | $1,423 |
| 5600-0507 | Light Whelen model PSB00FCR LED (PR) blue with clear lens. Location: [#LOC]. | $663 |
| 5600-0508 | Warning light Whelen Vertex Super LED warning lights. Includes (1) red model VTX609R LED light head with clear lens w/chrome flange model VTXFC. Location: interior door pan of L2 centered outboard. Wired through door ajar. | $268 |
| 5600-0509 | Warning light Whelen M2 Super LED warning lights. Includes (2) blue M2B LED light heads w/chrome flanges (if applicable). Location: [#LOC]. | $572 |
| 5600-0510 | Warning light Whelen Rota-Beam series model 6RB Super LED (PR) with clear lenses; driver blue officer red. Location: [#LOC]. | $1,003 |
| 5600-0511 | Federal Signal Vision LED rotating beacons model VSLR with driver red dome/rear facing IPX6 and officer amber dome/ rear facing IPX6 LED warning lights. Location: [#LOC]. | $2,430 |
| 5600-0512 | Warning light Whelen M6 series Linear Super LED (PR) red driver amber officer. Location: [#LOC]. | $718 |
| 5600-0514 | Warning light Whelen M-Series Super LED model M9M (PR) blue/amber with clear lenses. Surface mounted with weatherproof connector. Location: [#LOC]. | $1,423 |
| 5600-0516 | Federal NVG10 Navigator LED warning light (PR) with [#COL] lenses. Location: [#LOC]. | $1,608 |
| 5600-0517 | Federal NVG10 Navigator LED warning light (PR) with clear lenses and [#COL] LED reflectors. Location: [#LOC]. | $1,608 |
| 5600-0518 | Power Arc (PR) Model LED210 blue with clear lenses. Location: [#LOC]. | $1,303 |
| 5600-0519 | Power Arc (PR) Model LED210 driver red officer blue with clear lenses. Location: [#LOC]. | $1,303 |
| 5600-0520 | Power Arc (PR) Model LED180 red with clear lenses. Location: [#LOC]. | $1,303 |
| 5600-0521 | Warning light Power Arc model M90FK-RC LED (PR). Color: Red with clear lens. Location: [#LOC]. | $1,040 |
| 5600-0522 | Warning light Whelen Rota-Beam series model 6RB Super LED (PR) driver red officer blue. Location: [#LOC]. | $1,003 |
| 5600-0524 | Power Arc warning light LED (PR) Model P14SM. Color: Red with clear lenses. Location: [#LOC]. | $964 |
| 5600-0525 | Power Arc warning light LED (PR) Model P14SM. Color: Blue with clear lenses. Location: [#LOC]. | $964 |
| 5600-0526 | Warning light Federal Signal QL64XF LED (PR) red with diamond plate mounting boxes. Location: [#LOC]. | $811 |
| 5600-0527 | Warning light Whelen M6 series Linear Super LED (PR) blue driver red officer. Location: [#LOC]. | $718 |
| 5600-0528 | Power Arc warning light LED (PR) Model P14SM with diamond plate box. Color: (1) red (1) blue with clear lenses. Location: red officer side upper forward body corner blue officer side upper rearward body corner. | $1,121 |
| 5600-0529 | Power Arc warning light LED (PR) Model P6NT. Color: Red driver blue officer with clear lenses. Location: [#LOC]. | $695 |
| 5600-0530 | Power Arc warning light LED (PR) Model P6NT-BC. Color: Blue with clear lenses. Location:[#LOC]. | $695 |
| 5600-0531 | Power Arc warning light LED (PR) Model MP13SM. Color: white/blue driver white/red officer with clear lenses. Location: (1) each side front bumper inboard of frame rails. | $1,166 |
| 5600-0532 | Warning light Whelen M6RC series Super LED (PR) red with clear lens and diamond plate mounting box. Location: [#LOC]. | $843 |
| 5600-0533 | Warning light Whelen Rota-Beam series model 6RBRC Super LED (PR) red with clear lenses and diamond plate mounting boxes. Location: [#LOC]. | $1,161 |
| 5600-0534 | Warning light Whelen 500 series split TIR6 Super LED (PR) blue/amber driver red/amber officer. Surface mounted 5TSMAC bezel with weatherproof connector. Location: [#LOC]. | $608 |
| 5600-0535 | Warning light Whelen 900 series split Super LED (PR) driver red/amber oifficer blue/amber with clear lenses. Location: [#LOC] | $1,235 |
| **AERIAL LADDERS/PLATFORMS** | | |
| 6100-0000 | Ladder HM100 with waterway to 80 ft. Includes partial fly section K-bracing left side console with cover split steps at tip and jack leg flood lights. | $241,494 |

| Item No. | Description | |
|---|---|---|
| 6100-0001 | Ladder HM100 without waterway. Includes partial fly section K-bracing left side console with cover split steps at tip and jack leg flood lights. | $211,985 |
| 6100-0002 | Ladder 110 with waterway to 87'. Includes partial fly section K-bracing left side console with cover split steps at tip and jack leg flood lights. | $241,570 |
| 6100-0003 | Ladder 110 without waterway. Includes partial fly section K-bracing left side console with cover split steps at tip and jack leg flood lights. | $212,062 |
| 6100-0004 | Platform 95 Rear-Mount. Includes left side roll top console and jack leg flood lights. | $384,804 |
| 6100-0006 | Ladder HP100. Includes pinned waterway left side console with cover split steps at tip and jack leg flood lights. | $302,515 |
| 6100-0007 | Ladder CR100 with waterway. Includes left side console with cover split steps at tip and jack leg flood lights. | $297,874 |
| 6100-0008 | Platform HP95 Mid-Mount. Includes driver side roll top console level assist and jack leg flood lights. | $405,713 |
| 6100-0009 | Ladder HP100 SideStacker. Includes pinned waterway left side console with cover turntable mansaver bars split steps at tip and jack leg flood lights. | $303,486 |
| 6100-0010 | Ladder CR100 SideStacker with waterway. Includes left side console with cover turntable mansaver bars split steps at tip and jack leg flood lights. | $298,845 |
| 6100-0011 | Platform 95 SideStacker. Includes left side roll top console turntable mansaver bars and jack leg flood lights. | $385,802 |
| 6100-0012 | Platform Bronto F118HDT-ER. Less monitor heat shields and wood pads. Includes first boom lifting eye 40 AMP converter and 6 wire intercom cable run from base to tip. Requires artic oil for units operating in sub zero conditions and tropical oil for units operating in dry desert conditions. | $552,640 |
| 6100-0016 | Ladder HP100 tiller. Includes pinned waterway console cover split steps at tip and jack leg flood lights. Hydraulic reservoir on tractor chassis to have access panel on front of reservoir to service suction strainer. | $435,285 |
| 6100-0018 | Platform HP100 with SideStacker T/T. Includes left side roll top console turntable mansaver bars and jack leg flood lights. | $385,802 |
| 6100-0019 | Platform HP100 with full turntable. Includes left side roll top console turntable mansaver bars and jack leg flood lights. | $385,802 |
| 6100-0020 | Ladder HM100 with waterway to tip. Includes full fly section K-bracing left side console with cover split steps at tip and jack leg flood lights. | $245,218 |
| 6100-0025 | Aerial chassis components for 95-Platform/CR100/110H/135. Requires customer supplied aerial and aerial overhaul/upgrade package. | $153,605 |
| 6100-0026 | Raise aerial turntable pedestal and boom support 1" (Required on HP100 Platform with long or extended cab). | $2,913 |
| 6100-0030 | Lower aerial turntable pedestal and boom support 6in (HM100/110/LTH100). Top of turntable support to top of torque box to be 36.25in. | $884 |
| 6100-0031 | Ladder 110' SideStacker with waterway to 87'. Includes partial fly section K-bracing left side console with cover turntable mansaver bars split steps at tip and jack leg flood lights. | $242,542 |
| 6100-0032 | Lower aerial turntable pedestal and boom support 3" (HP100/HPS105 ladder). Top of turntable support to top of torque box to be 35.813". | $884 |
| 6100-0033 | Ladder CR137 with waterway to 110'. Includes left side console with cover split steps at tip and jack leg flood lights. | $308,907 |
| 6100-0034 | Ladder CR137 SideStacker with waterway to 110'. Includes left side console with cover turntable mansaver bars split steps at tip and jack leg flood lights. | $309,878 |
| 6100-0035 | Lower aerial turntable pedistal and boom support (CR100/95-Platform). Top of turntable support to top of torque box to be 32.875" (for use with a 58" high body). | $884 |
| 6100-0036 | Ladder HM100 with waterway to tip for SideStacker body. Includes full fly section K-bracing left side console with cover split steps at tip and jack leg flood lights. | $246,191 |
| 6100-0037 | Ladder HP100. For use with center rear staircase body. Includes pinned waterway rear handrail extension (PR) on turntable left side console with cover split steps at tip and jack leg flood lights. | $302,821 |
| 6100-0038 | Lower aerial turntable pedestal and boom support 3in (HM100/110/LTH100). Top of turntable support to top of torque box to be 39.25in. | $884 |
| 6100-0039 | Lower aerial turntable pedestal and boom support 4". For use with 65" high body. | $554 |
| 6100-0040 | Platform HP100 (2000 GPM capacity) with SideStacker T/T. Includes perimeter flow w/way pipe 5" swivel 5" lower w/way piping left side roll top console turntable mansaver bars and jack leg flood lights. | $387,834 |
| 6100-0041 | Raise aerial turntable pedistal and boom support 2". Top of turntable support to top of torque box to be 36". (Required on Industrial HP100 Platform 750 gallon or greater tank). | $2,972 |

| Item No. | Description | |
|---|---|---|
| 6100-0042 | Ladder LTH100 without waterway. Includes left side console with cover adjustable height turntable handrails split steps at tip and jack leg flood lights. | $210,850 |
| 6100-0043 | Lower aerial turntable pedestal and boom support 2" (HP100 Platform). Top of turntable support to top of torque box to be 32". | $884 |
| 6100-0044 | Ladder LTH100 with waterway to tip. Includes left side console with cover adjustable height turntable hand rails split steps at tip and jack leg flood lights. | $244,082 |
| 6100-0047 | Ladder LTH100 with waterway to 80 ft. Includes left side console with cover adjustable height turntable hand rails split steps at tip and jack leg flood lights. | $240,387 |
| 6100-0050 | There shall be no visible raw diamond plate (unpainted) on the aerial turntable. The following items on the turntable to be diamond plate painted black durabak: turntable console turntable deck and access step. | $819 |
| 6100-0051 | Raise aerial turntable pedistal and boom support 1". Top of turntable support to top of torque box to be 36.875". (Applicable to 95P/CR100/CR137 w/sidestacker style frame cut). | $2,913 |
| 6100-0052 | Raise aerial turntable pedistal and boom support 2". Top of turntable support to top of torque box to be 37.875". (Applicable to 95P/CR100/CR137 w/sidestacker style frame cut). | $2,913 |
| 6100-0053 | Hinged turntable console cover IPOS. Cover to be diamond plate with hinge on outboard side mounted to tube style pedestal mount. Includes modified left side turntable handrail. | $500 |
| 6100-0054 | Ladder HPS105. For use with SideStacker body. Includes pinned waterway left side console with cover turntable mansaver bars split steps at tip and jack leg flood lights. | $303,486 |
| 6100-0055 | Platform Bronto F100RLP. Includes GCS controls water flow and pressure and floor temp in displays. Requires artic oil for units operating in sub zero conditions and tropical oil for units operating in dry desert conditions. | $435,571 |
| 6100-0057 | Platform Bronto F134RLP. Includes GCS controls water flow and pressure and floor temp in displays. Requires artic oil for units operating in sub zero conditions and tropical oil for units operating in dry desert conditions. | $539,847 |
| 6100-0059 | Platform Bronto F116 RLP+. Includes variable jacking hyd oil cooler and water flow and pressure and floor temp in displays. Requires ultrasonic collision guard option artic oil for units operating in sub zero conditions and tropical oil for units operating in dry desert conditions. | $530,337 |
| 6100-0061 | Ladder HP100 SideStacker w/o waterway. Includes left side console with cover turntable mansaver bars split steps at tip and jack leg flood lights. | $276,571 |
| 6100-0062 | Ladder HPS105. Includes pinned waterway left side console with cover split steps at tip and jack leg flood lights. | $302,515 |
| 6100-0063 | LINE-X package for Aerial Turntable: Includes turntable console turntable deck platework and access steps and any other storage boxes or brackets fabricated out of diamond plate installed on the turntable. | $944 |
| 6100-0064 | Aerial turntable control console's exterior aluminum plate work to be smooth plate IPO diamond plate and painted job color. | $1,165 |
| 6100-0065 | Lower aerial turntable pedestal and boom support 1" (HP100 Platform). Top of turntable support to top of torque box to be 33". | $470 |
| 6100-0066 | Platform HP100 with full turntable. Includes OEM controls left side roll top console turntable mansaver bars and jack leg flood lights. | $375,534 |
| 6100-0067 | Turntable control pedestal to be full diamond plate IPO tube style pedestal mount. Includes diamond plate cover hinged to front and access door at lower area. | $1,511 |
| 6100-0068 | Platform 95 Rear-Mount. Includes platform with angled corners left side roll top turntable console and jack leg flood lights. | $368,770 |
| 6100-0069 | Platform 95 SideStacker. Includes platform with angled corners left side roll top turntable console and jack leg flood lights. | $369,727 |
| 6100-0070 | Aerial turntable rotation drive motor cover exterior aluminum plate work to be smooth plate IPO diamond plate and painted job color. | $583 |
| 6100-0071 | Platform HP100 with SideStacker T/T. Includes OEM controls left side roll top console turntable mansaver bars and jack leg flood lights. | $375,534 |
| 6100-0072 | Platform HPS100 with full turntable. Includes left side console turntable mansaver bars and jack leg flood lights. | $385,802 |
| 6100-0073 | Platform HPS100 with SideStacker T/T. Includes left side console turntable mansaver bars and jack leg flood lights. | $385,802 |
| 6100-0074 | Turntable control pedestal to be full diamond plate IPO tube style pedestal mount. Includes diamond plate cover hinged to side and access door at lower area. | $1,511 |
| 6100-0075 | Platform HP100 with full turntable. Includes left side roll top console and jack leg flood lights. Note chains IPO mansaver bars at turntable handrails. | $385,167 |

| Item No. | Description | |
|---|---|---|
| 6100-0076 | Locate aerial rotation drive on driver side IPOS. Includes modified turntable control console to incorporate the rotation drive cover. | $396 |
| 6100-0077 | Extensions for aerial and aerial jack grease fittings. Extensions to be routed to three groups (left torque box right torque box and aerial). | $1,137 |
| 6100-0078 | Raise aerial turntable pedestal and boom support 3". Top of turntable support to top of torque box to be 41.812". (Applicable to HP100 w/sidestacker style frame cut). | $2,913 |
| 6100-0079 | Diamond plate catwalk w/gator grip each side of HP95 mid-mount platform bucket. | $1,456 |
| 6100-0080 | Platform HP95 Mid-Mount. Console in platform to be on right side offset to rear. Includes driver side roll top turntable console level assist and jack leg flood lights. | $409,668 |
| 6100-0082 | Raise aerial turntable pedestal and boom support 3". (HM100/110/LTH100). Top of turntable support to top of torque box to be 42.25in. | $3,030 |
| 6100-0083 | Aerial turntable control console's exterior aluminum plate work to be smooth plate IPO diamond plate and painted two-tone job color. | $1,165 |
| 6100-0084 | Ladder HM100 SideStacker with waterway to 80 ft. Includes partial fly section K-bracing left side console with cover turntable mansaver bars split steps at tip and jack leg flood lights. | $242,466 |
| 6150-0000 | Cold weather package for aerial hydraulic system. | $2,740 |
| 6150-0001 | Aerial hydraulic filter isolation kit. | $388 |
| 6150-0002 | Aerial hydraulic reservoir to be located in lower L1 compt. | $1,009 |
| 6150-0003 | Gauge aerial hydraulic oil level. Electronic display to be located [#LOC]. | $596 |
| 6150-0004 | Extended length outrigger foot (PR). Required with 33k rear axle. | $365 |
| 6150-0005 | Aerial hydraulic oil reservoir to be stainless steel IPOS. Includes flange type hyd fittings. Not for use in southern climates. | $1,784 |
| 6150-0006 | Gauge aerial hydraulic oil level. Electronic display to be located on upper rear surface of turntable control console. | $829 |
| 6150-0007 | Aerial hydraulic reservoir to be located front center of body on "H" style bracket. | $1,009 |
| 6150-0008 | Integral outrigger pad extensions (4). 15" x 20" x .5" steel plate welded to std jack foot plates. | $448 |
| 6150-0009 | Cold weather package for shared aerial hydraulic system. | $280 |
| 6150-0011 | Aerial hydraulic sight level gauge IATS. To be located on forward face of aerial reservoir viewable from a hinged door facing outboard behind compartment plate work. | $639 |
| 6150-0012 | Extended length outrigger foot (4). Required with >54k rear axle on HP100 Platform. | $150 |
| 6150-0014 | Aerial hydraulic pump - variable displacement. | $4,098 |
| 6150-0015 | Aerial hydraulic pump to have drive through provision. For use with up to 10kw Harrison 10kw Smartpower and 15kw Onan. | $524 |
| 6150-0016 | Special aerial hydraulic reservoir/location due to customer's requirements. | $1,187 |
| 6150-0017 | Aerial hydraulic reservoir to be located in lower L2 compt. | $1,009 |
| 6150-0018 | Aerial hydraulic reservoir to be located in lower L3 compt. | $1,009 |
| 6150-0019 | Forward drop down and lock jacks shall be provided with same larger ground pads (PR) as those provided for rear drop down jacks. Only applies to 95' mid mount platform. | $319 |
| 6300-0000 | Monitor Akron electric 1000GPM for RLP/HDT. Includes 24v motors tip controls base controls and a butterfly valve. Sidesweep is 45 degrees left and right. | $13,008 |
| 6300-0001 | Monitor Elkhart electric 1000 GPM for ladder. Includes tip and base controls. | $11,796 |
| 6300-0002 | Monitor Akron electric 1000 GPM for ladder. Includes tip and base controls. | $11,688 |
| 6300-0003 | Monitor Elkhart electric 1000GPM for platform. Includes tip controls base controls and a butterfly valve. | $11,688 |
| 6300-0004 | Monitor Elkhart electric 1250GPM. Includes tip controls base controls and a butterfly valve. | $11,688 |
| 6300-0005 | Monitor Akron electric 1000GPM for platform. Includes tip controls base controls and butterfly valve. | $11,332 |
| 6300-0007 | Monitor Akron electric 1250GPM for platform. Includes tip controls base controls and butterfly valve. | $11,851 |
| 6300-0009 | Monitor Elkhart dual for platform. Rated at 1250 GPM on the 92 Pltfrm and 1500 GPM on the HP95MM and HP100 Pltfrm. Includes (1) electric and (1) manual monitor (2) butterfly valves and tip/base controls for the electric monitor. Monitor sweep is 67.5 degrees outward and 22.5 degrees inward. | $17,745 |
| 6300-0010 | Monitor Akron dual for platform. Rated at 1250 GPM on the 92 Pltfrm and 1500 GPM on the HP95MM and HP100 Pltfrm. Includes (1) electric and (1) manual monitor (2) butterfly valves and tip/base controls for the electric monitor. Monitor sweep is 67.5 degrees outward and 22.5 degrees inward. | $18,147 |
| 6300-0011 | 1000 GPM Akron electric monitor for Tiller ladder. Includes auto-stow tip and base controls. | $13,027 |
| 6300-0012 | Monitor Akron dual for Bronto. Rated at 1250 GPM. Includes (1) electric and (1) manual monitor (2) butterfly valves and tip/base controls for the electric monitor. Monitor sweep is 45 degrees outward and 22.5 degrees inward. | $18,145 |

| Item No. | Description | |
|---|---|---|
| 6300-0013 | Monitor TFT electric 1000GPM for platform with powder coated silver finish. Includes tip controls base controls and butterfly valve. | $14,166 |
| 6300-0014 | Monitor TFT electric 1250GPM with powder coated silver finish. Includes tip controls base controls and a butterfly valve. Monitor to have multiple flow ratings based on position. | $14,166 |
| 6300-0015 | Monitor TFT dual for platform with powder coated silver finish. Rated at 1250 GPM on the 92 Pltfrm and 1500 GPM on the HP95MM and HP100 Pltfrm. Includes (1) electric and (1) manual monitor (2) butterfly valves and tip/base controls for the electric monitor. Monitor sweep is 67.5 degrees outward and 22.5 degrees inward. | $18,931 |
| 6300-0016 | Monitor TFT electric 1000 GPM for ladder with a powder coated silver finish. Includes tip and base controls. | $11,688 |
| 6300-0018 | Monitor painted job color. | $427 |
| 6300-0020 | Monitor Akron electric 1250GPM with SabreMaster nozzle. Includes tip controls base controls and a butterfly valve. | $12,929 |
| 6300-0023 | Monitor Akron electric 1000GPM with SabreMaster nozzle for RLP/HDT. Includes automatic stow 24v motors tip controls base controls and a butterfly valve. Sidesweep is 45 degrees left and right. | $14,950 |
| 6300-0024 | Monitor Akron electric 1000GPM with SabreMaster nozzle for platform. Includes tip controls base controls and butterfly valve. | $12,929 |
| 6300-0025 | Monitor Elkhart Scorpion RF 1000GPM for ladder. Includes (1) handheld control OEM transmitter with tip and base controls. | $14,945 |
| 6300-0029 | Monitor painted two-tone (secondary) job color. | $427 |
| 6300-0030 | Monitor Akron dual for platform. Rated at 1250 GPM on the 92 Pltfrm and 1500 GPM on the HP95MM and HP100 Pltfrm. Includes (1) electric with SabreMaster nozzle and (1) manual monitor (2) butterfly valves and tip/base controls for the electric monitor. Monitor sweep is 67.5 degrees outward and 22.5 degrees inward. | $19,223 |
| 6300-0031 | Monitor Akron 3578 electric 1000GPM for ladder. Includes 3499 stack tips 3485 steam shaper and base controls. | $11,333 |
| 6300-0032 | Monitor Akron electric 1000GPM with SabreMaster nozzle for ladder. Includes tip and base controls. | $12,897 |
| 6300-0033 | Monitor Akron electric 1500GPM. Side sweep limited to 45 degrees. Up sweep limited to 30 degrees. Includes tip controls base controls and a butterfly valve. | $12,467 |
| 6300-0034 | Monitor Akron electric 1250GPM. Includes 3499 stack tips 3485 steam shaper tip controls base controls and a butterfly valve. | $11,124 |
| 6300-0035 | Monitor Akron electric 1250GPM for 95-Platform. Side sweep limited to 45 degrees. Up sweep limited to 30 degrees. Includes tip controls base controls and butterfly valve. | $11,851 |
| 6300-0036 | Monitor Elkhart electric 1000GPM for Bronto HDT. Includes tip controls base controls and a butterfly valve. Side sweep is 45 degrees left and right. | $11,688 |
| 6300-0037 | Monitor Akron 3578 electric 1000GPM for ladder. Includes base controls. Does not include nozzle or tips. For use with dept supplied 3499 stack tips and 3485 steam shaper (to be noted on the NFPA exceptions document). | $10,639 |
| 6300-0039 | Semi-Automatic stow upgrade for TFT monitor on aerial ladder. Includes switches with indicatior lights at aerial turntable and pump panel control stations. Requires use of TFT control sys IPO OEM. | $771 |
| 6300-0040 | Semi-automatic stow upgrade for Akron monitor on aerial. Includes switch with indicatior light at aerial control console(s). | $739 |
| 6300-0041 | Monitor controls on pump operators panel. Ladders only. | $886 |
| 6300-0042 | Monitor Akron electric 1500GPM for ladder. Includes tip and base controls. Side sweep limited to 45 degrees. | $12,243 |
| 6300-0043 | Monitor TFT dual for platform. Rated at 1250 GPM on the 92 Pltfrm and 1500 GPM on the HP95MM and HP100 Pltfrm. Includes (1) electric and (1) manual monitor w/stacked tips (2) butterfly valves and tip/base controls for the electric monitor. Monitor sweep is 67.5 degrees outward and 22.5 degrees inward. | $18,378 |
| 6300-0044 | Monitor Akron electric 1000GPM StreamMaster XT with SabreMaster nozzle for ladder. Includes tip controls base controls and stow feature. | $15,129 |
| 6300-0045 | Monitor Elkhart dual for platform. Rated at 1250 GPM on the 92 Pltfrm and 1500 GPM on the HP95MM and HP100 Pltfrm. Includes (2) manual monitors (2) butterfly valves. Monitor sweep is 67.5 degrees outward and 22.5 degrees inward. | $12,114 |
| 6300-0046 | Wireless control for Akron monitor on aerial. Includes (1) transmitter. | $2,019 |
| 6300-0047 | Monitor painted FLNA3225 red. | $427 |
| 6300-0048 | Wireless control for TFT Monitor on aerial. Includes (1) transmitter and stainless steel mounting bracket. | $2,529 |

| Item No. | Description | |
|---|---|---|
| 6300-0049 | Monitor TFT electric 1000GPM for ladder with a powder coated silver finish. Includes stacked tips with tip and base controls. | $10,827 |
| 6300-0050 | Monitor TFT electric 1000GPM for ladder. Includes shut off valve at tip (VUM) with 2.5" aux discharge valve. Includes tip and base controls. Monitor has a powder coated silver finish. Requires high flow W/W relief vlv. | $13,721 |
| 6300-0051 | Monitor Elkhart dual for platform. Rated at 1250 GPM on the 92 Pltfrm and 1500 GPM on the HP95MM and HP100 Pltfrm. Includes (1) electric Scorpion EXM w/SM-1250 nozzle and (1) manual Scorpion monitor w/handwheels and ST-195 stacked tips (2) butterfly valves and tip/base controls for the electric monitor. Monitor sweep is 67.5 degrees outward and 22.5 degrees inward. | $19,024 |
| 6300-0052 | Monitor TFT electric 1000GPM for ladder (with reduced extension pipe at 2.75" long). Includes shut off valve at tip (VUM) with 2.5" aux discharge valve. Includes tip and base controls. Monitor has a powder coated silver finish. Requires high flow W/W relief vlv. | $14,088 |
| 6300-0053 | Monitor Akron electric 1250GPM for ladder. Includes tip and base controls. Side sweep limited to 45 degrees. | $11,688 |
| 6300-0054 | Monitor TFT electric 1250GPM with powder coated silver finish. Includes tip controls base controls and electric VUM with dual outlets (1) pointed out and (1) pointed in. VUM to be controlled from platform and turntable control consoles. | $14,400 |
| 6300-0055 | Manual monitor painted silver from OEM. Electric monitor painted job color. Applies to dual monitor platforms only. | $323 |
| 6300-0056 | Monitor Akron dual for platform. Rated at 2000 GPM on the HP100 Pltfrm. Includes (1) electric monitor with 5178 nozzle (1) manual monitor with 5170 nozzle (2) butterfly valves and tip/base controls for the electric monitor. Monitor sweep is 67.5 degrees outward and 22.5 degrees inward at 1500 flow. Greater flows have restricted sweep. | $19,134 |
| 6300-0057 | Monitor TFT dual electric for platform with powder coated silver finish. 1250 GPM on the 92 Pltfrm and 1500 GPM on the HP95MM and HP100 Pltfrm. Includes (2) electric monitors (2) manual VUM valves with (1)2.5" gated elbow outlet including 2.5" x 1.5" reducer w/cap tip/base controls with monitor selector switch. Monitor sweep is 67.5 degrees outward and 22.5 degrees inward. | $23,289 |
| 6300-0058 | Monitor TFT dual electric for platform with powder coated silver finish. Rated at 1500 GPM on 95-Pltfrm and 2000 GPM on HP100 Pltfrm. Includes (2) electric monitors (2) VUM valves with (1)2.5" gated elbow outlet including 2.5" x 1.5" reducer w/cap tip/base controls and monitor selector switch. Monitor sweep is 67.5 degrees outward and 22.5 degrees inward. | $23,289 |
| 6300-0059 | Monitor Elkhart dual electric for platform. Rated at 2000 GPM on HP100 Pltfrm. Includes (2) electric monitors (2) butterfly valves tip/base controls and monitor selector switch. Monitor sweep is 67.5 degrees outward and 22.5 degrees inward. | $25,051 |
| 6300-0060 | Monitor TFT electric 1250GPM with powder coated silver finish. Waterway rated at 1250gpm with M-ERP2000-NN nozzle. Includes tip controls base controls and a butterfly valve. | $14,940 |
| 6300-0061 | Monitor TFT electric 1250GPM for ladder. Includes shut off valve at tip (VUM) with reduced extension pipe at 2.75" long and 2.5" aux discharge valve . Side sweep set at 45 degrees. Includes tip and base controls. Monitor has a powder coated silver finish. Requires 4" waterway discharge and high flow W/W relief vlv. | $13,721 |
| 6300-0062 | Monitor TFT electric 1500GPM for ladder with a powder coated silver finish. Side sweep set at 45 degrees. Requires 4" waterway discharge. Includes tip and base controls. | $11,688 |
| 6300-0063 | Monitor TFT dual electric for platform with powder coated silver finish. Rated at 1500 GPM on 95-Pltfrm and 2000 GPM on HP100 Pltfrm. Includes (2) electric monitors w/2000gpm nozzles (2) VUM valves with (1)2.5" gated elbow outlet including 2.5" x 1.5" reducer w/cap tip/base controls and monitor selector switch. Monitor sweep is 67.5 degrees outward and 22.5 degrees inward. | $24,554 |
| 6300-0064 | Monitor TFT Typhoon RC electric w/extended range 1000GPM for ladder. Includes tip and base controls. Monitor has a powder coated silver finish. | $12,009 |
| 6300-0066 | Monitor Elkhart Cobra EXM 1250GPM for 95-Platform. Side sweep limited to 45 degrees. Up sweep limited to 30 degrees. Includes tip controls base controls and butterfly valve. | $11,298 |
| 6300-0068 | Monitor TFT electric 1250GPM with powder coated silver finish. Includes tip controls base controls and manual VUM with dual outlets. | $12,589 |
| 6300-0069 | Monitor Elkhart Scorpion electric 1500GPM for ladder. Includes tip and base controls. Side sweep limited to 45 degrees. | $13,770 |
| 6300-0070 | Monitor TFT Typhoon RC electric w/extended range 1000GPM for ladder. Includes shut off valve at tip (VUM) with 2.5" aux discharge valve. Includes tip and base controls. Monitor has a powder coated silver finish. Requires high flow W/W relief vlv. | $13,421 |

| Item No. | Description | |
|---|---|---|
| 6300-0071 | Monitor TFT dual for platform with powder coated silver finish. Rated at 1250 GPM on the 92 Pltfrm and 1500 GPM on the HP95MM and HP100 Pltfrm. Includes (1) electric and (1) manual monitor (2) manual VUM valves with (1)2.5" gated elbow outlet including 2.5" x 1.5" reducer w/cap tip/base controls. Monitor sweep is 67.5 degrees outward and 22.5 degrees inward. | $19,323 |
| 6300-0072 | Monitor Elkhart Cobra EXM 1000GPM for ladder. Includes tip and base controls. | $10,518 |
| 6300-0073 | Semi-automatic stow upgrade for Elkhart Scorpion monitor on aerial. Includes switch with indicatior light at aerial control console(s). | $593 |
| 6300-0074 | Monitor Elkhart electric 1000 GPM with ST-195 triple stack tips IPO fog nozzle. Includes tip and base controls. | $9,810 |
| 6300-0076 | Monitor Akron StreamMaster II electric with SabreMaster nozzle 1250GPM for platform. Includes tip controls base controls and a butterfly valve. Monitor to have multiple flow ratings based on position. | $12,705 |
| 6300-0077 | Monitor Akron StreamMaster II w/5177 electric nozzle 1000 GPM for ladder. Includes tip and base controls. | $10,801 |
| 6300-0078 | Monitor Akron StreamMaster II electric with 5177 nozzle 1000GPM. Includes 24v motors tip controls base controls auto stow and a butterfly valve. Sidesweep is 45 degrees left and right. | $10,707 |
| 6300-0079 | Monitor Akron StreamMaster II electric with SabreMaster nozzle 1000GPM. Includes 24v motors tip controls base controls auto stow and a butterfly valve. Sidesweep is 45 degrees left and right. | $12,256 |
| 6300-0080 | Monitor Akron dual StreamMaster II for platform. Rated at 1250 GPM on the 92 Pltfrm and 1500 GPM on the HP95MM and HP100 Pltfrm. Includes (1) electric and (1) manual monitor (2) butterfly valves and tip/base controls for the electric monitor. Monitor sweep is 90 degrees outward and 22.5 degrees inward. Monitors to have multiple flow ratings based on position. | $17,889 |
| 6300-0081 | Platform to be configured for dual monitors driver side to be capped off for dealer installed 3" valve. | $1,116 |
| 6300-0082 | Akron Electric Ladder Pipe style 1494 w/5177 nozzle and wireless remote control. Battery control modules and power receptacle to be mounted to aluminum plates one each side outside fly. | $16,805 |
| 6300-0083 | Monitor Akron electric 1250GPM. Includes 2499 stack tips 3485 steam shaper tip controls base controls and a butterfly valve. Applies to HP100 Platform only. | $11,247 |
| 6300-0084 | Monitor TFT electric 1500GPM for ladder with a powder coated silver finish. Side sweep set at 45 degrees. Requires 4" waterway discharge. Includes tip and base controls. | $11,688 |
| 6300-0085 | Monitor Akron StreamMaster II w/1577 SabreMaster electric nozzle 1000 GPM for ladder. Includes tip and base controls. | $11,874 |
| 6300-0086 | Monitor TFT manual 2000GPM with powder coated silver finish. Waterway rated at 1250gpm. Includes manual VUM and dual outlets with CFD threads. | $10,395 |
| 6300-0087 | Monitor Akron electric StreamMaster II with 1577 SaberMaster nozzle and Task Force Tips VUM w/dual outlets rated at 1250gpm Platform. Includes tip and base controls. | $14,431 |
| 6300-0088 | Monitor TFT electric 1000GPM with powder coated silver finish. Includes tip controls base controls and manual VUM with single outlet. | $11,445 |
| 6300-0089 | Monitor Elkhart manual 1250GPM. Includes Scorpion 8294-02 monitor w/handwheels X-Stream SM-2000 manual nozzle and a butterfly valve. | $6,211 |
| 6300-0090 | Akron Electric Ladder Pipe style 1494 w/5177 nozzle wireless remote control and mounting fixture. | $17,292 |
| 6300-0091 | Monitor Akron dual for platform. Rated at 1250 GPM on the 92 Pltfrm and 1500 GPM on the HP95MM and HP100 Pltfrm. Includes (1) electric with SabreMaster nozzle and (1) manual monitor with 3499 stacked tips and 3485 stream shaper (2) butterfly valves and tip/base controls for the electric monitor. Monitor sweep is 67.5 degrees outward and 22.5 degrees inward. | $18,496 |
| 6300-0092 | Monitor Akron Apollo style 3426 manual 1250GPM with tiller arm control for platform. Includes butterfly valve. | $3,974 |
| 6300-0093 | Monitor TFT dual electric for platform with powder coated silver finish. Rated at 1250 GPM on 95-Pltfrm and 1500 GPM on HP100 Pltfrm. Includes (2) electric monitors w/1250gpm nozzles tip/base controls and monitor selector switch. Monitor sweep is 67.5 degrees outward and 22.5 degrees inward. | $21,909 |
| 6300-0094 | Monitor Akron 3483 Manual with 5160 nozzle. | $6,320 |
| 6300-0095 | Monitor Akron electric StreamMaster II with 1577 SaberMaster nozzle and Task Force Tips VUM w/single outlet rated at 1000gpm ladder. Includes tip and base controls. | $13,266 |
| 6300-0096 | Monitor TFT manual 1250/1500 GPM with powder coated silver finish. Includes a butterfly valve. Monitor to have multiple flow ratings based on position. | $5,489 |

| Item No. | Description | |
|---|---|---|
| 6300-0097 | Monitor TFT electric 1500GPM with powder coated silver finish. Includes tip controls base controls and a butterfly valve. Monitor to have multiple flow ratings based on position. | $14,166 |
| 6300-0098 | Monitor TFT electric for platform 1500GPM with powder coated silver finish. Includes tip controls base controls and manual VUM with dual 2.5" aux discharge valves. Monitor to have multiple flow ratings based on position. HP100 Platform HPS100 Platform and HP95 MM Platform only. | $14,616 |
| 6300-0099 | Akron Electric Ladder Pipe style 1494 w/5177 nozzle. Battery control modules and power receptacle to be mounted to aluminum plates one each side outside fly. Includes controls at tip and turntable console. | $14,331 |
| 6300-0100 | Monitor TFT electric for platform 1250/1500GPM with powder coated silver finish. Includes stacked tips tip controls base controls and manual VUM with dual 2.5" aux discharge valves. Monitor to have multiple flow ratings based on position. HP100 Platform HPS100 Platform and HP95 MM Platform only. | $13,654 |
| 6300-0102 | Monitor Akron dual electric for platform. Rated at 1500 GPM on 95-Pltfrm and 2000 GPM on HP100 Pltfrm. Includes (2) StreamMaster II electric monitors with 1577 SaberMaster nozzles (2) butterfly valves dual controls (seperate control for each monitor) in platform bucket and monitor selector switch (A/B) at turntable console. Monitor sweep is 67.5 degrees outward and 22.5 degrees inward at 2000 flow. Greater flows have restricted sweep. | $22,134 |
| 6300-0103 | Monitor TFT Typhoon RC electric w/extended range 1500GPM for ladder. Includes shut off valve at tip (VUM) with 2.5" aux discharge valve. Side sweep set at 45 degrees. Requires 4" waterway discharge and high flow W/W relief valve. Includes tip and base controls. Monitor has a powder coated silver finish. | $13,421 |
| 6350-0000 | Pinned waterway - upgrade. Waterway pins to section 2 or 3 on HP75 / HP78 and pins to section 3 or 4 on LTH100 HM100 and CR100. | $7,548 |
| 6350-0001 | Nozzle Guard. | $788 |
| 6350-0002 | Elkhart 2.5" valve for platform. Valve to be located at the [#LOC]. | $1,534 |
| 6350-0003 | Waterway drain for RLP/HDT/Snozzle. | $515 |
| 6350-0004 | Relief valve Hale P30 for RLP/HDT aerial waterway. | $1,580 |
| 6350-0005 | Rear 4" NST waterway inlet for rear mounted aerials. Includes chrome cap. | $1,042 |
| 6350-0006 | 2.5" Waterway Class 1 pressure gauge 30-0-600. Locate next to waterway inlet. | $202 |
| 6350-0007 | 3.5" Waterway Class 1 pressure gauge. Locate next to waterway inlet. | $228 |
| 6350-0008 | Waterway shut-off valve. Mounted to allow waterway to be used as a discharge. (Available on 1000 GPM waterway only - N/A with Waterous pumps on 4-jack aerials.) | $1,387 |
| 6350-0009 | Right side 4" NST waterway inlet for Mid-Mount Boom or Platform. Includes chrome cap. | $1,518 |
| 6350-0010 | Flowminder with single readout and totalizer for the aerial waterway to be located at the aerial control station. | $2,536 |
| 6350-0011 | Flowminder with dual readout and totalizer for the aerial waterway to be located at each aerial control station. | $3,973 |
| 6350-0012 | Akron 2.5" valve for platform. Valve to be located at the [#LOC]. | $1,692 |
| 6350-0013 | 2.5" NST Chrome cap and chain for platform discharge valve. | $56 |
| 6350-0014 | 2.5" chrome elbow with 2.5" x 1.5" reducer and 1.5" cap for platform / ladder discharge valve. | $280 |
| 6350-0015 | Dual 4" NST waterway inlets for Mid-Mount Platform. Includes chrome caps. | $2,744 |
| 6350-0016 | Dual 4" NST waterway inlets located (1) each side on trailer gooseneck. Includes chrome 4" caps. Also includes (2) 1.5" drain valves. To be hard piped down low on front corners of trailer body and terminated with a 1.5" MNST adaptor and cap. Outlet to point inward toward frame. | $3,183 |
| 6350-0017 | 4" Waterway inlet valve (PR). Includes 4" Akron ball valves w/handwheel controls and 4" FNST x 5" Storz droop elbows. Locate (1) each side on waterway inlet. Handwheel to be positioned above valve facing forward. | $7,608 |
| 6350-0018 | Akron 1.5" valve for platform. Valve to be located inside the right rear of platform plumbed to hose box. | $1,543 |
| 6350-0019 | 2.5" Waterway Class 1 pressure gauge 30-0-400. Locate next to waterway inlet. | $202 |
| 6350-0020 | Dual read 2.5" Waterway Class 1 pressure gauge (30-0-600 psi/100-0-4140 KPA). Locate next to waterway Inlet. | $202 |
| 6350-0021 | Dual read 3.5" Waterway Class 1 pressure gauge (30-0-600 psi/100-0-4140 KPA). Locate next to waterway Inlet. | $271 |
| 6350-0024 | 3.5" Waterway Class 1 pressure gauge 30-0-400. Locate next to waterway inlet. | $228 |
| 6350-0025 | 2.5" Noshok Waterway pressure gauge 30-0-600. Locate next to waterway inlet. | $216 |
| 6350-0026 | 2.5" Stainless steel RedHead 45 degree elbow with 2.5" x 1.5" chrome brass reducer and 1.5" chrome brass cap for platform discharge valve. | $458 |

| Item No. | Description | |
|---|---|---|
| 6350-0027 | Auxiliary waterway inlet isolation valve - 4" handwheel controlled Akron. Mounted to allow aux inlet to be connected while flowing waterway from on-board pump.Includes relief valve and bleeder outboard of 4" valve. | $3,977 |
| 6350-0028 | 4" Waterway inlet valve (PR). Includes 4" Akron ball valves w/handwheel controls and 4" FNST x 4" Storz droop elbows. Locate (1) each side on waterway inlet. Handwheel to be positioned above valve facing forward. | $7,451 |
| 6350-0029 | Rear 4" NST waterway inlet (PR) for rear mounted aerials. Includes 4" Akron handwheel controled shut-off vlvs relief vlvs and chrome caps. Available only on CR100/92RM and HP100 Platform WOP inlet replaces small compts at lower rear of body. | $10,440 |
| 6350-0030 | 2.5" CSA Chrome cap and chain for platform discharge valve. | $104 |
| 6350-0031 | Auxiliary waterway inlet isolation valve - 4" electric controlled Akron. Mounted to allow aux inlet to be connected while flowing waterway from on-board pump. Includes relief valve and bleeder outboard of 4" valve. | $4,413 |
| 6350-0033 | Waterway inlet shut-off valve - 4" electric controlled Akron. Mounted below ladder tunnel between torque box and rear of body. Includes relief valve and bleeder outboard of 4" valve. Note: Std aerial relief valve to be located ahead of 4" valve. Applies to rear side staircase style bodies only. | $4,413 |
| 6350-0034 | 3.5" Waterway Class 1 pressure gauge 0 to 300. Locate next to waterway inlet. | $228 |
| 6350-0035 | 2.5" LED Class 1 Pressure Gauge (30-0-400). Waterway Color: [#COL] | $245 |
| 6350-0036 | 3.5" Waterway pressure gauge Ashcroft Gauge. Locate next to waterway inlet. | $228 |
| 6350-0037 | 2.5" Waterway Class 1 pressure gauge 0 to 300. Locate next to waterway inlet. | $202 |
| 6350-0038 | Relief valve Hale P30 for aerial waterway. Required with tip vlv option. For use with three section aerial only. | $1,028 |
| 6350-0039 | Akron 2.5" valve for ladder tip. Includes alum manifold and butterfly valve to shut-off monitor. Requires high flow W/W relief vlv. HP78 only. | $2,832 |
| 6350-0040 | 2.5" Waterway Span pressure gauge 30 to 600. Locate next to waterway inlet. | $202 |
| 6350-0041 | Waterway inlet check valve 4" (PR). Includes bleeder outboard of valve. Locate on driver and officer side. | $1,396 |
| 6350-0042 | Dual read 3.5" Waterway Class 1 pressure gauge (30-0-400 psi/100-0-2758 KPA). Locate next to waterway Inlet. | $271 |
| 6350-0043 | Auxiliary waterway inlet isolation valve - 4" electric controlled Akron. Mounted to allow aux inlet to be connected while flowing waterway from on-board pump. Includes bleeder outboard of 4" valve. Control to at the pump operator panel. | $3,948 |
| 6350-0044 | 3.5" Waterway Span pressure gauge 30 to 600. Locate next to waterway inlet. | $229 |
| 6350-0045 | Pressure gauge Class1 digital for the aerial waterway. Gauge to be located at the aerial turntable control station. | $1,136 |
| 6350-0048 | Waterway shut-off valve 4" Akron elect model 9313. Mounted to allow waterway inlet to be used as a discharge. Master control to be located adjacent to the auxiliary waterway inlet slave control located on turntable console. | $4,941 |
| 6350-0049 | 2.5" FNST x 2.5" MCSA Chrome elbow with 2.5" FCSA x 1.5" MNPSH reducer and 1.5" cap for platform / ladder discharge valve. | $280 |
| 6350-0050 | 2.5" Pressure Gauge Dual Read (30-0-600 psi/100-0-4140 KPA). Locate next to waterway inlet Color: [#COL]. | $201 |
| 6350-0051 | 2.5" Waterway Class 1 pressure gauge 0 to 300. Locate on aerial turntable console rear facing. | $257 |
| 6350-0052 | 2.5" chrome elbow with 2.5" FNST x 1.5" MNPSH reducer and 1.5" cap for platform / ladder discharge valve. | $275 |
| 6350-0054 | 3.5" Waterway Class 1 pressure gauge 0-400. Locate next to waterway inlet. | $227 |
| 6350-0055 | Vacuum breaker for waterway. | $379 |
| 6350-0056 | Waterway shut-off valve - 4" electric controlled Elkhart unibody. Mounted in waterway riser piping. | $4,409 |
| 6350-0057 | Rear 5" NST waterway inlet for rear mounted high flow aerials. Piping to run on top of torque box and "Y" into waterway pipe below swivel. Includes chrome cap. | $1,595 |
| 6350-0058 | Rear 5" NST waterway inlet for rear mounted aerials. Includes chrome cap. Requires TB with 5" wway pipe. | $1,595 |
| 6350-0059 | The rear waterway drain to be controlled by a cable IPOS. Locate control at rear body adjacent to waterway inlet. | $348 |
| 6350-0060 | 3.5" Waterway Class 1 pressure gauge. Locate next to waterway inlet. Color: [#COL]. | $246 |
| 6350-0061 | 3.5" Waterway compound pressure gauge (30-0-400). Color: [#COL]. | $356 |
| 6350-0062 | Rear 5" NST waterway inlet with 4" plumbing for rear mounted aerials. Includes chrome cap. | $1,110 |
| 6350-0063 | Relief valve Hale P40 for aerial waterway IPOS. Required with tip vlv option. For use with four section aerial only. | $1,267 |

| Item No. | Description | |
|---|---|---|
| 6350-0064 | Elkhart 2.5" valve for ladder tip. Includes alum manifold and butterfly valve to shut-off monitor. Requires high flow W/W relief vlv. | $2,832 |
| 6350-0065 | 2.5" Noshok Waterway pressure gauge 0 to 300. Locate next to waterway inlet. | $216 |
| 6350-0067 | 2.5" Innovative Controls stainless steel case pressure gauge (0-400) with color code bezel. Locate next to waterway inlet. | $143 |
| 6350-0068 | 2.5" Innovative Controls stainless steel case dual read pressure gauge (0-2750KPA/0-400PSI) with color code bezel. Locate next to waterway inlet. | $143 |
| 6350-0069 | 2.5" Innovative Controls brass case pressure gauge (0-400) with color code bezel. Locate next to waterway inlet. | $163 |
| 6350-0070 | 4" Innovative Controls stainless steel case pressure gauge (0-400) with color code bezel. Locate next to waterway inlet. | $223 |
| 6350-0071 | 4" Innovative Controls stainless steel case dual read pressure gauge (0-2750KPA/0-400PSI) with color code bezel. Locate next to waterway inlet. | $223 |
| 6350-0072 | 4" Innovative Controls brass case pressure gauge (0-400) with color code bezel. Locate next to waterway inlet. | $319 |
| 6350-0073 | 2.5" Innovative Controls brass case dual read pressure gauge (0-2750KPA/0-400PSI) with color code bezel. Locate next to waterway inlet. | $163 |
| 6350-0074 | 4" Innovative Controls brass case dual read pressure gauge (0-2750KPA/0-400PSI) with color code bezel. Locate next to waterway inlet. | $319 |
| 6350-0075 | Rear 4" NST waterway inlet for rear mounted aerials to be flush. Includes chrome cap. | $1,042 |
| 6350-0076 | 4" Innovative Controls stainless steel case pressure gauge (30-0-400) with color code bezel. Locate next to waterway inlet. | $223 |
| 6350-0077 | Front 5" NST waterway inlet for rear mounted aerials. Piping to "Y" into waterway pipe below swivel. Includes chrome cap. | $5,181 |
| 6350-0079 | Waterway drain for RLP/HDT/Snozzle. The waterway drain valve to be located on the waterway piping and to be controlled by a cable IPOS. Locate control at rear body adjacent to waterway inlet. | $663 |
| 6350-0080 | 4" NST rear waterway inlet to be in a recessed aluminum rear access plate to allow specified adapter to be installed without affecting the overall length of the vehicle (see shop order for OAL and adapter details). | $371 |
| 6350-0081 | Elkhart 2.5" valve for platform (PR). Includes chrome 90 degree swivel with 1.5" reducer and cap. Outlet threads to be CFD (Chicago). Valves to be located one each side of monitor. | $3,786 |
| 6350-0082 | Akron 2.5" valve for platform QST threads. Valve to be located at the [#LOC]. | $1,692 |
| 6350-0083 | Akron 1.5" valve with NSPH threads for platform. Valve to be located inside the right rear of platform plumbed to hose box. | $1,543 |
| 6350-0085 | 4" Innovative Controls brass base Nite-Glo pressure gauge 0-400 with color code bezel. Locate next to waterway inlet. | $448 |
| 6350-0086 | Waterway 1.5" Drain Valve Electric/Air Actuated with two switch controls. Switch located (1) at the rear and (1)at the turntable. | $845 |
| 6350-0087 | Chrome 2.5" x 1.5" reducer with 1.5" cap for platform discharge valve. | $188 |
| 6350-0088 | Rear 4.5" NST waterway inlet with 4" plumbing for rear mounted aerials. Includes chrome cap. | $1,087 |
| 6350-0089 | 2.5" Innovative Controls stainless steel case pressure gauge (0-300) with color code bezel. Locate next to waterway inlet. | $143 |
| 6350-0090 | Platform discharge valve handle to be inboard and shorten handle. | $56 |
| 6350-0091 | Rear 4" NST waterway inlet for rear mounted aerials. Intake located low on officer side at rear of body with piping routed up to outside of tunnel to enter into top of ladder tunnel connecting in to swivel. Includes stainless steel piping and chrome cap. | $2,025 |
| 6350-0092 | 2.5" Innovative Controls Nite-Glo brass case pressure gauge (0-400) and color code bezel with red light gauge illumination. Locate next to waterway inlet. | $324 |
| 6400-0000 | Breathing air platform with (2) 300CF cylinders. Includes low air alarm. | $9,039 |
| 6400-0001 | Breathing air platform with (2) 444CF cylinders. Includes low air alarm. | $10,202 |
| 6400-0002 | Breathing air platform with (2) 509CF cylinders. Includes low air alarm. | $12,734 |
| 6400-0003 | Breathing air platform with (1) 444CF cylinder. Includes low air alarm. | $7,654 |
| 6400-0004 | Breathing air ladder with (1) 300CF cylinder. Includes low air alarm. | $8,798 |
| 6400-0005 | Breathing air ladder with (2) 300CF cylinders. Includes low air alarm. | $10,760 |
| 6400-0006 | Breathing air ladder with (1) 444CF cylinder. Includes low air alarm. | $8,920 |
| 6400-0007 | Fill hose 50' 2250 PSI for 300CF cylinders. | $874 |
| 6400-0008 | Fill hose 50' 5000 PSI for 444CF cylinders. | $1,018 |
| 6400-0009 | Fill hose 50' 10000 PSI for 509CF cylinders. | $1,248 |
| 6400-0010 | Additional breathing air outlet at turntable console. Includes filter. | $673 |
| 6400-0011 | Breathing air outlets additional in platform (PR). | $251 |

| Item No. | Description | |
|---|---|---|
| 6400-0012 | Breathing air ladder with (2) 444CF cylinders. Includes low air alarm. | $11,924 |
| 6400-0013 | Breathing air platform with (1) 509CF cylinder. Includes low air alarm. | $9,515 |
| 6400-0014 | Breathing air ladder with (1) 509CF cylinder. Includes low air alarm. | $10,784 |
| 6400-0015 | Fill hose 100' 5000 PSI for 444CF cylinders. | $2,033 |
| 6400-0016 | Breathing air outlets additional (PR) on ladder fly section. These outlets shall be piped from the tip manifold back down to the lower end of the fly where the outlets will be mounted. It will align at the monitor when the ladder is fully extended. | $1,462 |
| 6400-0018 | Breathing air platform with (2) 444CF cylinders. Includes low air alarm. Bottles shall be the same model year as the apparatus. | $10,202 |
| 6500-0000 | Hose box for 50' of 1.75" DJ hose located [#LOC]. | $641 |
| 6500-0001 | Hose box for 50' of 2.5" DJ hose [#LOC]. | $647 |
| 6500-0011 | Pike pole tube for 6' pole on ladder. Location: [#LOC]. | $270 |
| 6500-0012 | Pike pole tube for 8' pole on ladder. Location: [#LOC]. | $270 |
| 6500-0013 | Pike pole tube for 10' pole on ladder. Location: [#LOC]. | $270 |
| 6500-0014 | Pike pole tube for 12' pole on ladder. Location: [#LOC]. | $270 |
| 6500-0015 | Mansaver safety bars mounted at turntable (PR). | $1,796 |
| 6500-0016 | Lifting eyes on platform (PR). Not available on Bronto. | $324 |
| 6500-0017 | Lifting arm for Mid-Mount platform. | $604 |
| 6500-0018 | Stokes basket receiver for use with Ferno Washington Model 71 Stokes on 95 RM platforms. Includes brackets to mount stokes on base of ladder. With a center hosebed or without a pump the stokes basket shall mount on the right side of the base section opposite the breathing air bottles. With a side hosebed the stokes basket shall mount on the right side of the base section ahead of the sign plate. Stokes not included. | $1,242 |
| 6500-0019 | Axe bracket mounted on aerial. For use with a 6 lb. axe only. Location: [#LOC]. | $449 |
| 6500-0020 | Stokes basket receiver for use with Ferno Washington Model 71 Stokes on 95 MM platforms. Stokes not included. | $1,501 |
| 6500-0023 | Dual rope roller for aerial. | $2,513 |
| 6500-0024 | Lifting eye at tip of ladder. N/A on HM100 with pinned wway to tip. | $445 |
| 6500-0025 | Rear hand rail extension (PR) on turntable for center access step on rear of the body. HP75 / HP78 center hose bed only. | $311 |
| 6500-0026 | Stokes basket receiver for use with Ferno Washington Model 71 Stokes on HP100 platform. Includes brackets to mount stokes to base section right side ahead of sign plate (if equipped). Stokes not included. | $2,159 |
| 6500-0027 | Lifting eye / tie-off package for HP/HPS100 Platform. Includes lifting eyes each side (below mainrail) at tip of base and a tie-off point on each turntable trunnion. | $2,029 |
| 6500-0028 | Rappelling rope guides located each side on front hand rail of platform. HP95 and HP100 Platforms only. | $254 |
| 6500-0030 | Hard suction storage box (PR) with nylon straps. (1) each side of ladder base section. Outer wall to be used as sign plate. Color: [#COL] | $1,959 |
| 6500-0031 | Hose box for 10' of 1.75" DJ hose located [#LOC]. | $611 |
| 6500-0032 | Vogel auto lube system for aerial device (up to 8 points). Includes Dia Plt cover w/slot to view grease level. | $2,751 |
| 6500-0033 | Mansaver safety bars w/o padded cover mounted at turntable (PR). | $1,861 |
| 6500-0037 | Storage box with hinged lid & butterfly latch for miscellaneous items rated for 10lb. capacity. Approx size: 8W x 8L x 20D. Box location: [#LOC]. | $449 |
| 6500-0038 | Stokes basket mounting bracket outside base section. Location: left side ahead of sign plate. | $821 |
| 6500-0039 | Equipment mounting plate 6'' W x height of ladder section. Loc: Outboard on right side of fly approx 11'' from tip. Permanent mounted equipment not to exceed 5 lbs. | $446 |
| 6500-0040 | Hose box for 100' of 1.75" DJ hose located [#LOC]. | $684 |
| 6500-0041 | Diamond plate storage box with hinged lid for chain saw. Saw to store with blade extended thru dealer supplied slot in sub floor. Located on officer side of aerial turntable. | $746 |
| 6500-0042 | Stokes basket mounting bracket outside base section. Location: right side rear of sign plate. | $821 |
| 6500-0043 | Retaining pin for pike pole storage tube. Pin to prevent pike pole form vibrating out of stored position on ladder section. | $104 |
| 6500-0044 | Center turntable handrail to flare outward approx 8" to provide additional working space. HP100 SideStacker ladder only. | $1,092 |
| 6500-0046 | Mask box in platform for two masks. Box is in addition to box supplied with breathing air system. | $433 |
| 6500-0048 | Turntable handrails - adjustable. Height to be able to be adjusted to allow for low height stations. Provide two settings approx 2" and 4" lower than std. | $1,078 |

| Item No. | Description | |
|---|---|---|
| 6500-0049 | Lifting eyes each side at tip of base. Rating is 400 lbs ea 800 lbs pr. | $1,380 |
| 6500-0050 | Stokes basket receiver for use with Junkin model JSA-200 stokes on 95-Platform. Includes brackets to mount stokes on base of ladder. With a center hosebed or without a pump the stokes basket shall mount on the right side of the base section opposite the breathing air bottles. With a side hosebed the stokes basket shall mount on the right side of the base section ahead of the sign plate. Stokes not included. | $1,242 |
| 6500-0051 | Stokes basket mounting bracket outside base section. Location: right side ahead of sign plate. | $821 |
| 6500-0052 | Stokes basket mounting bracket outside base section. Location: left side rear of sign plate. | $821 |
| 6500-0053 | Hose box for 25' of 1.75" DJ hose located [#LOC]. | $616 |
| 6500-0054 | Guard for quartz light on front of platform (EA). 1/8" Aluminum plate around top and sides of light. | $225 |
| 6500-0055 | Lifting eyes each side at tip of base. Rating is 1000 lbs ea 2000 lbs pr. | $1,380 |
| 6500-0057 | Left & Right side turntable handrails to flare out to rear to provide additional working space. HP100 platform with full turntable only. | $1,297 |
| 6500-0058 | Stokes basket receiver for use with Ferno Washington Model 71 Stokes on HP100 platform. Stokes and base mounting brackets not included. | $1,656 |
| 6500-0059 | Stokes basket receiver for use with Ferno Washington Model 71 Stokes on HP100 platform. Includes brackets to mount stokes to base section left side ahead of sign plate (if equipped). Stokes not included. | $2,159 |
| 6500-0060 | Heavy duty safety belt anchor points in platform (6). Anchors to be rated for 300# with a six foot long maximum shock lanyard. | $908 |
| 6500-0061 | Reducer 3.5"F x 2.5"M with mtg bracket. Locate at tip on right side. | $780 |
| 6500-0062 | Stokes basket receiver for use with Junkin MIL-8131-WM Stokes on HP100 platform. Includes brackets to mount stokes to base section right side ahead of sign plate (if equipped). Stokes not included. | $2,159 |
| 6500-0063 | Stokes basket receiver for use with Cascade model CT-PSS1 Stokes on 95 RM platforms. Includes brackets to mount stokes on base of ladder. With a center hosebed or without a pump the stokes basket shall mount on the right side of the base section opposite the breathing air bottles. With a side hosebed the stokes basket shall mount on the right side of the base section ahead of the sign plate. Stokes not included. | $1,242 |
| 6500-0064 | Diamond plate storage box with hinged lid for power cut saw. Box to be approx 32L x 16W x 20H located on right side of aerial turntable. Includes notch(es) as required for turntable handrail clearance. CR100/92Pltfrm with full T/T only. | $793 |
| 6500-0065 | Storage box with hinged lid & butterfly latch for miscellaneous items. Approx size: 6W x 14L x 15D. Box location:right side tip of ladder base. | $586 |
| 6500-0067 | PAC TRAC postive locking bracket (PR) for 8' pike pole on ladder includes stop plate to prevent the pole from sliding. location: right side of base horizontally mounted behind sign plate. | $360 |
| 6500-0068 | PAC TRAC postive locking bracket (PR) for 10' pike pole on ladder includes stop plate to prevent the pole from sliding. location: right side of base horizontally mounted behind sign plate. | $360 |
| 6500-0069 | PAC TRAC postive locking bracket (PR) for 12' pike pole on ladder includes stop plate to prevent the pole from sliding. location: right side of base horizontally mounted behind sign plate. | $360 |
| 6500-0070 | Diamond plate storage box with hinged lid for chain saw. Box to be approx 33L x 12W x 16D located on right side of aerial turntable. HP100L/CR100/137L/92Pltfrm with full T/T only. | $793 |
| 6500-0071 | PAC TRAC postive locking bracket (PR) for 12' Boston Rake on ladder. Includes stop plate to prevent the rake from sliding. location: left side of base horizontally mounted behind sign plate. | $360 |
| 6500-0072 | Guard shall be provided at tip for intercom speaker to protect against damage. | $185 |
| 6500-0073 | Guard shall be provided at tip for ladder controls to protect against damage. | $185 |
| 6500-0074 | Axe bracket mounted on aerial. For use with a 8 lb axe only. Location: [#LOC]. | $584 |
| 6500-0075 | Stokes basket mounting bracket for Rescue Tech 1 Model# 620124 outside base section. Location: left side ahead of sign plate. | $821 |
| 6500-0076 | PAC TRAC positive locking bracket (PR) for storing 10' attic ladder on ladder base includes stop plate to prevent the attic ladder from sliding. Location: right side of base horizontally mounted behind sign plate. | $548 |
| 6500-0077 | Stokes basket receiver for use with Ferno Washington Model 71 Stokes on 95 MM platforms. Stokes and storage brackets on side of base not included. | $996 |
| 6500-0078 | Lifting eye at tip of ladder (250lb rating). | $445 |

| Item No. | Description | |
|---|---|---|
| 6500-0079 | Stokes basket receiver for use with Junkin Model MIL-8131-W Stokes on 95 MM platforms. Stokes and storage brackets on side of base not included. | $996 |
| 6500-0080 | Storage box with hinged lid & butterfly latch for miscellaneous items rated for 30lb. capacity. Approx size: 5.5W x 18L x 40D. Box location: [#LOC]. | $587 |
| 6500-0081 | Hose box for (2) 50' rolls of 1.75" DJ hose. Position box on platform so vent holes are to the inside IPO outside. Location: [#LOC]. | $684 |
| 6500-0082 | Stokes basket receiver for use with Ferno Washington Model 71 Stokes on 95 RM platforms. Includes brackets to mount stokes to the inside of the aerial sign plate on the right side of the base section. Stokes not included. | $1,784 |
| 6500-0083 | PAC TRAC positive locking brackets four (4) for two (2) 8' pike poles on ladder includes stop plate to prevent the pole from sliding. Location: Two (2) brackets right side and two (2) left side of base horizontally mounted behind sign plate for one (1) pike pole each side. | $720 |
| 6500-0084 | Stokes basket receiver for use with CMC Rescue-CMC Pro Series Model #726112-T1 Stokes basket on HP100 platform. Includes brackets to mount stokes to base section right side ahead of sign plate (if equipped). Stokes not included. | $2,159 |
| 6500-0085 | Stokes basket receiver only for HP100 platform. Stokes and base mounting brackets not included. | $1,656 |
| 6500-0086 | Stokes basket storage box for Ferno Washington model 71 stokes on aerial base section. Includes hinged lid with gas springs & notch to clear extension system components. Locate right side on side of base section ahead of sign plate (if equipped). HP100 platform only | $2,447 |
| 6500-0087 | Stokes basket storage box for Ferno Washington model 71 stokes on aerial base section. Box to be aluminum smooth plate with swirl finish includes hinged lid with gas springs & notch to clear extension system components. Locate right side on side of base section ahead of sign plate (if equipped). HP100 platform only | $2,580 |
| 6500-0088 | Each jack leg shall include a "NO STEP" label. | $119 |
| 6500-0089 | PAC TRAC positive locking brackets four (4) for two (2) 8' pike poles with D-Handles on inside of left side of ladder fly section. | $720 |
| 6500-0090 | Stokes basket mounting bracket outside base section for Ferno Titan Tapered basket. Location: right side ahead of sign plate. | $821 |
| 6500-0091 | Diamond plate storage box with hinged lid to outside for Cutters Edge saw. Box to be approx 36" long x 16" wide x 16" deep includes butterfly latch gas shock hold-open and chrome grab handle. Locate right side of base section forward of sign plate. | $995 |
| 6500-0092 | Smooth plate aluminum storage box with hinged lid for chain saw. Saw to store with bar extended thru dealer supplied slot in sub floor. Located outside to right rear of platfrom. | $1,810 |
| 6500-0093 | Pike pole tube for 6' Firehooks NY Roofhook on ladder. Location: [#LOC]. | $270 |
| 6500-0094 | Stokes basket mounting bracket for Tranverse Advantage Basket Model# 11-0125 outside base section. Location: right side ahead of sign plate. | $821 |
| 6500-0095 | Diamond plate storage box with hinged lid to outside for (1) Cutter's Edge saw or (1) chain saw. Box to be approx 38L x 15W x 16D includes butterfly latch gas shock hold-upen chrome grab handle & notch to clear extension system components if applicable. Capacity 25lb. with tag attached to lid. Locate on driver's side of aerial base at tip. | $1,296 |
| 6500-0096 | PAC TRAC postive locking bracket (PR) for 12' pike pole on ladder includes stop plate to prevent the pole from sliding. location: left side of base horizontally mounted behind sign plate. | $360 |
| 6500-0097 | Zico QUIC-BAR/Axe mounting bracket MB-B/A less stop. Does not include QUIC-BAR or Axe. Location inside platform IPO axe bracket. HP100 Platform. | $558 |
| 6500-0098 | PAC TRAC Ironslok Halligan/Axe tool mounting bracket model# K5003. Does not include halligan or Axe. Location inside platform IPO axe bracket. Platform applications only. | $560 |
| 6500-0099 | Stokes basket receiver for use with Traverse Rescue Titan Tapered SS Stokes (Model# 11-0100) on 95 RM platforms. Includes brackets to mount stokes on base of ladder. With a center hosebed or without a pump the stokes basket shall mount on the right side of the base section opposite the breathing air bottles. With a side hosebed the stokes basket shall mount on the right side of the base section ahead of the sign plate. Stokes not included. | $1,242 |
| 6500-0100 | PAC TRAC positive locking brackets five (5) for two (2) pike poles (1) 8' & (1) 12'. Locate both on left side of ladder fly section. | $798 |
| 6500-0101 | PAC TRAC positive locking brackets two (2) for one (1) 8' pike pole with D-Handle on inside of left side of ladder fly section. | $351 |
| 6500-0102 | PAC TRAC positive locking brackets (PR) for one (1) 5' pike pole with D-Handle on inside of right side of ladder fly section. | $351 |

| Item No. | Description | |
|---|---|---|
| 6500-0103 | Stokes basket receiver for use with CMC Rescue-Stainless Steel Rescue Litter Model #726100 Stokes basket on 95 RM platforms. Includes brackets to mount stokes on base of ladder. With a center hosebed or without a pump the stokes basket shall mount on the right side of the base section opposite the breathing air bottles. With a side hosebed the stokes basket shall mount on the right side of the base section ahead of the sign plate. Stokes not included. | $1,242 |
| 6500-0104 | PAC TRAC postive locking bracket (PR) for 6' pike pole on ladder includes stop plate to prevent the pole from sliding. location: right side of base horizontally mounted behind sign plate. | $360 |
| 6500-0105 | PAC TRAC postive locking bracket (PR) for 8' pike pole on ladder includes stop plate to prevent the pole from sliding. location: left side of base horizontally mounted behind sign plate. | $360 |
| 6500-0106 | PAC TRAC positive locking brackets two (2) for one (1) 6' pike pole with D-Handle on inside of right side of ladder fly section. | $351 |
| 6500-0107 | Tie off eye on outrigger (4). Includes (2) 1" x 2.5" slots on each tie off eye. Locate on pivot side of outer jack tube. Rated at 9000lbs. each. For use with criss cross under slung jacks only. Note requires fixed outrigger cover's bottom edge raised to match bottom of body. | $1,657 |
| 6500-0108 | Aerial turntable handrails shall be removable IPO standard. Includes pin to fix upper removable handrail to lower handrail sleeve permanently attached to turntable. | $515 |
| 6500-0109 | PAC TRAC positive locking brackets two (2) for one (1) 6' pike pole on inside of right side of ladder fly section. | $351 |
| 6500-0110 | Stokes basket receiver for use with Junkin JSA-300CS Stokes on HP100 platform. Includes brackets to mount stokes to base section right side ahead of sign plate (if equipped). Stokes not included. | $2,159 |
| 6500-0113 | Stokes basket receiver for use with Cascade Rescue Professional Series tapered one piece Titanium litter on HP100 platform. Includes brackets to mount stokes to base section right side ahead of sign plate (if equipped). Stokes not included. | $2,159 |
| 6500-0114 | Smooth plate w/swirl finish storage box with hinged lid to outside for (1) Cutter's Edge saw or (1) chain saw. Box to be approx 38L x 15W x 16D includes butterfly latch gas shock hold-upen chrome grab handle & notch to clear extension system components if applicable. Capacity 25lb. with tag attached to lid. Locate on driver's side of aerial base at tip. | $1,428 |
| 6500-0115 | Stokes basket mounting bracket outside base section for a Ferno model 71 stokes basket. Location: right side rear of sign plate. | $821 |
| 6500-0116 | Tie-off steel loops (PR) for aerial. Includes tie-off point on each turntable trunnion below heel pin. | $368 |
| 6500-0117 | Lifting eyes each side on bolt-on ladder tip. Rating is 250 lbs ea / 500 lbs pr. | $461 |
| 6500-0118 | Pike pole tube for 6' NY hook on ladder. Location: [#LOC]. | $270 |
| 6500-0119 | PAC TRAC postive locking bracket (PR) for 6' pike pole on ladder includes stop plate to prevent the pole from sliding. location: left side of base horizontally mounted behind sign plate. | $360 |
| 6500-0120 | PAC TRAC positive locking brackets four (4) for one 14' pike pole. Locate on right side on inside fly section. | $660 |
| 6500-0121 | Stokes basket storage box fabricated from smooth plate aluminum with swirl finish for Ferno Washington model 71 stokes and also sized to accommodate stokes basket receivers on aerial base section. Includes hinged lid with gas springs & notch to clear extension system components. Locate right side on side of base section ahead of sign plate (if equipped). HP100 platform only. | $3,001 |
| 6500-0122 | Mask style storage box outside to rear of platform for (2) safety harnesses. Approximate size is 6W x 18L x 15D. Box is in addition to box supplied with breathing air system. | $575 |
| 6500-0123 | PAC TRAC positive locking brackets (PR) for 6' trash hook w/D-ring on inside of left side of ladder fly section. Includes aluminum smooth plate boot for trash hook head storage for safety concerns. | $609 |
| 6500-0124 | PAC TRAC postive locking bracket (PR) for 6' pike pole on ladder includes stop plate to prevent the pole from sliding. location: left side of base horizontally mounted behind sign plate. | $360 |
| 6500-0125 | PAC TRAC positive locking bracket (PR) for 10' pike pole on ladder includes stop plate to prevent the pole from sliding. location: left side of base horizontally mounted behind sign plate. | $360 |
| 6500-0126 | Smooth plate storage box with hinged lid to outside for Cutters Edge saw. Box to be approx 36" long x 16" wide x 16" deep includes butterfly latch gas shock hold-open and chrome grab handle. Finish to be swirled. Locate right side of base section rearward of sign plate. | $995 |

| Item No. | Description | |
|---|---|---|
| 6500-0127 | Akron ladder pipe mounting fixture. Fixture to be mounted at final inspection. | $487 |
| 6500-0128 | PAC TRAC positive locking brackets four (4) for two (2) 12' pike poles on ladder includes stop plate to prevent the pole from sliding. Location: both pike poles left side of base horizontally mounted behind sign plate. | $720 |
| 6500-0130 | Stokes basket receiver for use with Junkin JSA-200 Stokes on 95 RM platforms. Includes brackets to mount stokes on base of ladder. With a center hosebed or without a pump the stokes basket shall mount on the right side of the base section opposite the breathing air bottles. With a side hosebed the stokes basket shall mount on the right side of the base section ahead of the sign plate. Stokes not included. | $1,242 |
| 6500-0131 | Hose box for 25' of 1.50" DJ hose located [#LOC]. | $641 |
| 6500-0132 | Smooth plate storage box with hinged lid to outside for miscellaneous storage. Box to be approx 38" long x 15" wide x 15" deep includes butterfly latch gas shock hold-open and chrome grab handle. Finish to be swirled. Locate right side of base section rearward of sign plate. | $995 |
| 6500-0133 | Diamond plate storage box with hinged lid to outside for miscellaneous/Axe storage. Box to be approx 40L x 15W x 18D includes axe bracket with clamp butterfly latch gas shock hold-upen chrome grab handle & notch to clear extension system components if applicable. Capacity 45lb. with tag attached to lid. Locate on driver's side of aerial base at tip. | $1,509 |
| 6500-0134 | Smooth plate storage box with hinged lid to outside for miscellaneous tool storage. Box to be approx 14" long x 6" wide x 38" deep includes thumb latch. Finish to be swirled. Locate left side of platform. | $995 |
| 6500-0135 | Stokes basket receiver for use with CMC Rescue-Stainless Steel Rescue Litter Model #726100 Stokes basket on HP100 platform. Includes brackets to mount stokes to base section right side ahead of sign plate (if equipped). Stokes not included. | $2,159 |
| 6500-0137 | Stokes basket diamond plate storage box on aerial base section. Includes hinged lid with gas springs & notch to clear extension system components. Locate right side on base section rearward of sign plate (if equipped). | $2,447 |
| 6500-0138 | Stokes basket mounting bracket outside base section for a Ferno model 71 stokes basket. Location: left side ahead of sign plate. | $821 |
| 6500-0139 | Storage box diamond plate with hinged lid & butterfly latch for 50' of 1.75" DJ hose rated for 50lb. capacity. Approx size: 8W x 25L x 12D. Floor to have extruded alum slats. Locate right side ahead of aerial sign plate on side of base section. | $791 |
| 6500-0140 | Stokes basket diamond plate storage box on aerial base section. Includes hinged lid & notch to clear extension system components. Locate right side forward of sign plate on base section. | $2,580 |
| 6500-0141 | PAC TRAC postive locking bracket for 6' Trash Hook w/D-ring handle. Includes fabricated aluminum smooth plate boot for trash hook head storage. Location: right side tip of base section. | $609 |
| 6500-0144 | Tie off eye on outrigger (4). Includes (2) 1" x 2.5" slots on each tie off eye. Locate on pivot side of outer jack tube. Painted orange and rated at 9000lbs each. For use with criss cross under slung jacks only. Note requires fixed outrigger cover's bottom edge raised to match bottom of body. | $1,897 |
| 6500-0149 | Stokes basket storage brackets for use with [#COL] Stokes. The stokes basket shall mount to the base section on the [#LOC]. Stokes not included | $395 |
| 6500-0151 | Stokes basket receiver for HP/HPS100 Platforms. Stokes and storage brackets on side of base not included. | $1,474 |
| 6550-0000 | Outrigger warning lights (4). Trucklite Model 60015R. | $227 |
| 6550-0001 | Outrigger warning lights (PR) LED. Truck-Lite model 91R. | $339 |
| 6550-0002 | Outrigger warning lights (4) LED. Truck-Lite model 91R. | $673 |
| 6550-0003 | Whelen 700 Series [#COL] strobe lights on platform (PR). The lights shall be switched with aerial master and located one each side on the [#LOC]. | $1,070 |
| 6550-0004 | Whelen strobe lights at ladder tip (PR) with [#COL] lenses. Switched with aerial master. | $1,079 |
| 6550-0006 | Code3 45R LED red warning lights (4). Located down low across front of platform wired to the upper level warning lights. | $1,603 |
| 6550-0007 | Whelen 700 series LED red warning lights (4). Located down low across front of platform wired to upper level lights. | $1,723 |
| 6550-0009 | Whelen 700 Series [#COL] LED lights on platform (PR). The lights shall be switched with aerial master and located one each side on [#LOC]. | $710 |
| 6550-0010 | Outrigger warning lights (PR). Trucklite Model 60015R. | $116 |
| 6550-0011 | Outrigger warning lights (PR). Weldon Model 1010. | $116 |

| Item No. | Description | |
|---|---|---|
| 6550-0013 | Federal QL64XF LED red warning lights (4). Located down low across front of platform wired to upper level warning lights. | $1,320 |
| 6550-0014 | Whelen 600 Super LED red warning lights (4). Located down low across front of platform wired to upper level lights. | $1,431 |
| 6550-0015 | Code3 65R LED red warning lights (4). Located down low across front of platform wired to the upper level warning lights. | $1,439 |
| 6550-0016 | Federal QL64XF [#COL] LED warning lights on platform (PR). The lights shall be switched with aerial master and located one each side on [#LOC]. | $617 |
| 6550-0017 | Whelen 600 Super LED [#COL] LED warning lights on platform (PR). The lights shall be switched with aerial master and located one each side on [#LOC]. | $674 |
| 6550-0018 | Code 3 65 [#COL] LED warning lights on platform (PR). The lights shall be switched with aerial master and located one each side on [#LOC]. | $636 |
| 6550-0019 | Outrigger warning lights (PR) LED. Whelen 600 Super LED. | $629 |
| 6550-0020 | Whelen 500 Series TIR6 Super-LED lights at ladder tip (PR) with red lenses. Switched with aerial master. | $847 |
| 6550-0022 | LED warning lights on the sides of the platform to be switched with either upper level warning or aerial master warning. | $226 |
| 6550-0023 | Federal IMPAXX model IPX 302 [#COL] LED lights (4) with clear lenses at ladder tip. Lights located (2) each side (1) side facing and (1) forward facing. Lights to be synchronized together and switched with aerial master. | $1,208 |
| 6550-0025 | Whelen 500 Series TIR6 Super-LED lights at ladder tip (PR) with blue lenses. Switched with aerial master. | $847 |
| 6550-0026 | Whelen 600 Super LED red and blue warning lights (4). Located down low across front of platform alternating red/blue wired to upper level lights. | $1,431 |
| 6550-0027 | Code 3 model 468 [#COL] LED warning lights with clear lenses on platform (PR). The lights shall be switched with aerial master and located one each side on [#LOC]. | $659 |
| 6550-0028 | Whelen M4RC Super-LED lights at ladder tip (PR) with clear lenses. Switched with aerial master. | $921 |
| 6550-0029 | Outrigger warning lights (PR) LED. Federal Signal Quadraflare LED. | $632 |
| 6550-0030 | Whelen M6J Super LED red/blue warning lights (4) with clear lenses. Located down low across front of platform wired to upper level lights. | $1,644 |
| 6550-0031 | Whelen M6J Super LED split red/blue warning lights on platform (PR) with clear lenses. The lights shall be switched with aerial master and located one each on platform. | $787 |
| 6550-0032 | Whelen M6 Super LED red warning lights (4). Located down low across front of platform wired to upper level lights. | $1,476 |
| 6550-0033 | Whelen M6 Super LED [#COL] warning lights on platform (PR). The lights shall be switched with aerial master and located [#LOC]. | $718 |
| 6550-0034 | Outrigger warning lights (4) LED. Whelen M9RC red with clear lens. | $2,412 |
| 6550-0036 | Whelen 600 Super LED [#COL] LED warning lights on platform (PR). The lights shall be switched with upper level warning and located one each side on [#LOC]. | $674 |
| 6550-0037 | Outrigger warning lights (4) LED. Federal Signal Quadraflare LED. | $1,260 |
| 6550-0038 | Whelen 600 Super LED split red/clear warning lights (4). Located down low across front of platform wired to upper level lights. | $1,773 |
| 6550-0039 | Whelen M6 Super LED red and blue warning lights with clear lens (4). Located down low across front of platform red outboard blue inboard wired to upper level lights. | $1,476 |
| 6550-0040 | Additional LED outrigger warning lights (8). Lts to be recessed on inward facing front and rear ends of each outrigger cover. | $378 |
| 6550-0041 | Outrigger warning lights (4) LED. Whelen M6 Super LED. | $1,435 |
| 6550-0042 | Warning light Whelen Dominator Plus model DP4ARAR with (4) LINZ6 LEDs Amber Red Amber Red. Location: [#LOC]. The light shall be switched with emergency lighting. | $1,189 |
| 6550-0043 | Whelen M6 [#COL] Super LED warning light (EA). Location: [#LOC]. The light shall be switched with aerial master power. | $606 |
| 6550-0044 | Additional LED outrigger warning lights (4). Lts to be recessed on inward facing front and rear ends of each outrigger cover. | $191 |
| 6550-0045 | Whelen 600 Super LED red warning lights (4) with clear lenses. Located down low across front of platform wired to upper level lights. | $1,431 |
| 6550-0046 | Federal QL64XFC LED red warning lights (4)with clear lenses. Located down low across front of platform wired to upper level warning lights. | $1,320 |
| 6550-0047 | Outrigger warning lights (PR) LED. Federal Signal Quadraflare red LED with clear lenses. | $632 |
| 6550-0049 | Whelen M6 series Super LED red warning lights with clear lenses model number M6RC (4). Located down low across front of platform wired to upper level lights. | $1,476 |

| Item No. | Description | |
|---|---|---|
| 6550-0050 | Whelen 500 Series TIR6 Super-LED lights at ladder tip (PR) red with clear lenses. Switched with aerial master. | $847 |
| 6550-0051 | Whelen 500 Series LIN6 Super-LED lights at ladder tip (PR) with green lenses. Switched with aerial master. | $974 |
| 6550-0052 | Federal QL64SFC-RB LED split red/blue warning lights (4). Located down low across front of platform wired to upper level warning lights. | $1,492 |
| 6550-0053 | Whelen M6K Super LED split red/amber warning lights with clear lenses on platform (PR). The lights shall be switched with aerial master and located [#LOC]. | $797 |
| 6550-0054 | Whelen M6 Super LED (2) M6R red and (2) M6CC white with clear lens for total of (4) four warning lights. Locate clear lens inboard and red lens outboard down low across front of platform wired to upper level lights. | $1,463 |
| 6550-0055 | Whelen M6 Series Super-LED lights at ladder tip (PR) with blue lenses. Switched with aerial master. | $915 |
| 6550-0056 | Whelen 500 Series LIN6 Super-LED lights at ladder tip (PR) with clear lenses. Switched with aerial master. | $974 |
| 6550-0058 | Outrigger warning lights (PR) LED. Whelen M6 Super LED. | $718 |
| 6550-0060 | Whelen M6D Super LED red/clear warning lights (4) with clear lenses. Located down low across front of platform wired to upper level lights. | $1,644 |
| 6550-0062 | Whelen M7 Super LED [#COL] warning lights on platform (PR). The lights shall be switched with aerial master and located [#LOC]. | $718 |
| 6550-0063 | Whelen VTX609R Vertex Super-LED lights at ladder tip (PR). Red with clear lenses and chrome bezels. Switched with aerial master. | $603 |
| 6550-0064 | Whelen 5V1R Super-LED lights at ladder tip (PR) with red lenses. Switched with aerial master. | $864 |
| 6550-0065 | Federal QL64XFC [#COL] LED warning lights with clear lenses on platform (PR). The lights shall be switched with aerial master and located [#LOC]. | $617 |
| 6550-0066 | Outrigger warning lights (4) LED. Whelen M9V2RC red with clear lens. Scene lights wired through outrigger deployment switch(es) and scene light switch. | $4,143 |
| 6550-0067 | Outrigger warning lights (4) LED. Whelen M6RC Super LED with clear lenses. | $1,435 |
| 6550-0068 | Whelen M6 Super LED warning lights (4) with clear lenses.; (2) M6D split red/clear outboard (2) M6RC red inboard. Located down low across front of platform wired to upper level lights. | $1,644 |
| 6550-0069 | Outrigger warning lights (4) LED. Whelen 600 Super LED red with clear lenses. | $1,254 |
| 6550-0070 | Code3 65RW LED split red/whitre warning lights (4). Located down low across front of platform wired to the upper level warning lights. | $1,976 |
| 6550-0071 | Outrigger warning lights (4) LED. TecNiq T600 red LED grommet mounted. Requires side facing lights. | $492 |
| 6550-0072 | Whelen M6 Super LED warning lights (4) with clear lenses.; (2) M6D split red/clear inboard (2) M6RC red outboard. Located down low across front of platform wired to upper level lights. | $1,644 |
| 6550-0075 | Whelen VTX609B Vertex Super-LED lights at ladder tip (PR). Blue with clear lenses and chrome bezels. Switched with aerial master. | $603 |
| 6550-0077 | Whelen 500 Series TIR6 Super-LED lights at ladder tip (PR) with amber lenses. Switched with aerial master. | $847 |
| 6560-0000 | Outrigger flood light (4) RLP/HDT. Trucklite with rubber housing. | $245 |
| 6560-0001 | Ladder climbing lights. Lens colors shall be [#COL]. | $2,693 |
| 6560-0002 | Spot light 12V located [#LOC]. | $446 |
| 6560-0003 | Flood light 12V located [#LOC]. | $446 |
| 6560-0004 | Collins light FX-12 located [#LOC]. | $576 |
| 6560-0005 | Flood lights Unity at base (PR). | $522 |
| 6560-0006 | Collins light FX-12 at base (PR). | $1,260 |
| 6560-0007 | Flood lights Unity jib boom (PR) RLP/HDT. | $522 |
| 6560-0008 | Quartz light 500W with pole platform. Hardwired. Requires 110V twist lock at tip option. The light shall be located [#LOC]. | $687 |
| 6560-0009 | Quartz light 500W at tip. Hardwired. Requires 110V twist lock at tip option. The light shall be located [#LOC]. | $367 |
| 6560-0010 | Quartz light 750W Magnafire model KR1436 platform mounted. Requires 110 volt twistlock receptacle at tip option. Includes hardwired switch on platform console. The light shall be located [#LOC]. | $1,003 |
| 6560-0011 | Quartz light 750W Magnafire with pole model KR236-S mounted at platform. Requires 110V twist lock receptacle at tip option. The light shall be located [#LOC]. | $1,417 |
| 6560-0012 | Quartz light 750W Magnafire model KR636-S. Requires 110-volt receptacle at tip option. The light shall be located [#LOC]. | $1,137 |

| Item No. | Description | |
|---|---|---|
| 6560-0013 | Quartz light 750W Magnafire permanently mounted recessed in the center of the bottom heat shield on the platform. Requires 110 receptacle at tip option. Includes hardwired switch on platform console. Midmount only. | $930 |
| 6560-0014 | Quartz light 750W Magnafire (PR) permanently mounted recessed in the front corners of the bottom heat shield on the platform. Requires 110 receptacle at tip option. Includes hardwired switch on platform console. Midmount only. | $1,860 |
| 6560-0016 | Quartz light Fire Research Focus 750W/110V model FCA540-S75-CLP37-ON-SW with 37" pull up pole. The light shall be located [#LOC]. | $1,630 |
| 6560-0017 | Quartz light Fire Research Focus 750W/110V model FCA300-S75 with aerial mount. The light shall be located [#LOC]. | $1,057 |
| 6560-0018 | Quartz light Fire Research Focus 750W/110V model FCA570-S75-ON without pole. The light shall be located [#LOC]. | $1,249 |
| 6560-0019 | Quartz light Fire Research Optimum 750W/110V model OPA570-S75-ON without pole. The light shall be located [#LOC]. | $1,323 |
| 6560-0021 | Collins light at tip. 24 volt. Light to be located [#LOC]. | $641 |
| 6560-0022 | Collins light at base (PR). 24 volt. | $1,388 |
| 6560-0023 | Collins light on jib boom (PR). 24 volt. | $1,388 |
| 6560-0026 | Quartz light Fire Research Optimum 750W/110V model OPA540-S75-CLP37-ON-SW with 37" pull up pole. The light shall be located [#LOC]. | $1,697 |
| 6560-0028 | Grille guard for Magnafire light(s) on aerial. | $158 |
| 6560-0029 | Ladder climbing lights Truck-lite LED. Lens colors shall be [#COL]. | $3,024 |
| 6560-0030 | Grille guard for Optimum light(s) on aerial. | $154 |
| 6560-0031 | Quartz light 750W Magnafire 5000 model KR656-S. Requires 110-volt twist lock receptacle at tip option. The light shall be located [#LOC]. | $1,137 |
| 6560-0033 | Quartz light Fire Research Focus 750W/110V model FCA200-S75 (PR) permanently mounted recessed in the front corners of the bottom heat shield on the platform. Requires 110 receptacle at tip option. Includes hardwired switch on platform console. Midmount only. | $2,111 |
| 6560-0034 | Three way switching for quartz light on front of platform to allow light to be controlled from platform console turntable console or cab. Includes 12v/110v relay and switches at platform and base consoles. Requires add'l 12v switch option in cab. | $737 |
| 6560-0036 | Quartz light MagnaFire 70W/12V model KR-1331-S low profile permanent mount with angle bracket. Includes switch on light. Location(s): [#LOC]. | $1,541 |
| 6560-0037 | Collins light FX-6 located [#LOC]. No switch at lighthead. | $576 |
| 6560-0038 | Additional turntable console lights (PR). Locate (1) each side ahead of aerial controls. HP100 platform only. | $110 |
| 6560-0039 | Additional floor strip light in platform (EA). Location: [#LOC]. | $115 |
| 6560-0040 | Whelen model PSBP12C LED spot light located [#LOC]. | $595 |
| 6560-0041 | Whelen LED model PFBP12C at base (PR). | $1,098 |
| 6560-0042 | Quartz light 750W Magnafire 5000 model KR1456 platform mounted. Requires 110 volt twistlock receptacle at tip option. Includes hardwired switch on platform console. The light shall be located [#LOC]. | $992 |
| 6560-0043 | Quartz light Fire Research Focus 500W/110V model FCA200-S50 permanently mounted recessed in the center of the bottom heat shield on the platform. Requires 110 receptacle at tip option. Midmount only. | $962 |
| 6560-0044 | Quartz light Fire Research Optimum 750W/110V model OPA200-S75 recess mount. Includes hardwired switch on platform console. The light shall be located [#LOC]. | $1,209 |
| 6560-0045 | Outrigger flood lights LED (4) IPOS. Truck-Lite model 81380. | $739 |
| 6560-0046 | Outrigger flood lights LED (2) IPOS. Truck-Lite model 81380. | $371 |
| 6560-0047 | Quartz light Fire Research Focus 750W/110V model FCA300-S75 permanently mounted low on right side of platform offset to front facing down. Includes hardwired switch on platform console. Requires 110 receptacle at tip option. RLP only. | $1,140 |
| 6560-0048 | Collins light FX-HID located [#LOC]. | $655 |
| 6560-0049 | Collins light FX-HID at base (PR). | $1,420 |
| 6560-0050 | Light Whelen Pioneer Plus model PCP2 flood/spot with pedestal mount. Location(s): [#LOC]. | $2,375 |
| 6560-0051 | Quartz light Fire Research Focus 1000W/240V model FCA570-M12-ON without pole. The light shall be located [#LOC]. | $1,331 |
| 6560-0052 | Quartz light 900W Magnafire with 30" pole model KR239-S mounted at platform. Requires 220V at tip option. The light shall be located [#LOC]. | $1,463 |
| 6560-0054 | Quartz light 12V 70W Magnafire with pole model KR231-S mounted at platform. The light shall be located [#LOC]. | $1,660 |
| 6560-0057 | Outrigger flood lights LED (4). Whelen model PFBS6. | $1,245 |

| Item No. | Description | |
|---|---|---|
| 6560-0058 | Light Whelen Pioneer model KR-14PFP2AC platform mounted. Requires 110 volt twistlock receptacle at tip option. Includes hardwired switch on platform console. The light shall be located [#LOC]. | $2,039 |
| 6560-0059 | Light Whelen 12V Pioneer Plus model PSP1 spot light with PBAPED pedestal mount. Location: [#LOC]. | $1,663 |
| 6560-0062 | Fire Research Evolution 12V LED model FCA570-V15-ON without pole. The light shall be located [#LOC]. | $2,139 |
| 6560-0065 | Whelen model PFBP12C LED flood light located [#LOC]. | $549 |
| 6560-0066 | Light Fire Research Spectra 120V LED model SPA540-K20-CLP37-ON-SW with 37" pull up pole. The light shall be located [#LOC]. | $3,217 |
| 6560-0067 | Light Fire Research Spectra LED 120V model SPA570-K20 permanent mount. Requires 110-volt twist lock receptacle at tip option. Location(s): [#LOC]. | $2,729 |
| 6560-0068 | Light Fire Research Spectra 120V LED model SPA850-K20 with flat mount. Location: [#LOC]. | $2,436 |
| 6560-0069 | Light Whelen Pioneer Plus LED model PFP2 12V platform mounted. Includes hardwired switch on platform console. The light shall be located [#LOC]. NOTE: requires engineering approval when combined with 110VAC and/or breathing air at the platform. | $3,855 |
| 6560-0070 | Quartz light 750W Magnafire model KR-2656 recess mount. Requires 110 receptacle at tip option. Includes hardwired switch on platform console. The light shall be located center front of platform. | $765 |
| 6560-0071 | Ladder climbing lights Luma-Bar Pathfinder LED strip (both sides of 3 section ladder). Color: blue. | $7,513 |
| 6560-0072 | Light Whelen Pioneer Plus model PFP2AC 120V with recess mount. Requires 110-volt receptacle at tip option. Includes hardwired switch on platform console. The light shall be located [#LOC]. | $2,621 |
| 6560-0073 | Light Whelen Pioneer Plus model PFP2AC w/bail mount permanently mounted recessed in the center of the bottom heat shield on the platform. Requires 110-volt receptacle at tip option. Includes hardwired switch on platform console. Midmount only. | $2,471 |
| 6560-0074 | Whelen model PSBP12C LED spot lights (PR). Located: on the left and right side of aerial base. | $1,186 |
| 6560-0075 | Federal Signal QL97LEDSCENE LED scene light (EA) with weatherproof connectors. Switch on platform console. Locate [#LOC]. | $1,357 |
| 6560-0076 | Fire Research Evolution 12V LED model FCA300-V15 with aerial mount. Includes hardwired switch on platform console. The light shall be located [#LOC]. | $1,919 |
| 6560-0077 | Ladder climbing lights LED strip (one side of 3 section ladder). Color:[#COL]. | $2,754 |
| 6560-0078 | Ladder climbing lights Luma Bar Pathfinder LED strip for HP75/78 ladder (one side). Color: [#COL]. | $4,110 |
| 6560-0079 | Ladder climbing lights Luma Bar Pathfinder LED strip for HP75/78 ladder (both sides). Color: [#COL]. | $8,219 |
| 6560-0080 | Ladder climbing lights Luma Bar Pathfinder LED strip for 4 section aerial (one side). Color: [#COL]. | $4,551 |
| 6560-0081 | Ladder climbing lights Luma-Bar Pathfinder LED strip for 4 section aerial (both sides). Color: [#COL]. | $9,102 |
| 6560-0082 | Ladder climbing lights Luma Bar Pathfinder LED strip for CR137 (one side). Color: [#COL]. | $7,519 |
| 6560-0083 | Ladder climbing lights Luma Bar Pathfinder LED strip for CR137 (both sides). Color: [#COL]. | $15,035 |
| 6560-0084 | Ladder climbing lights Luma-Bar Pathfinder LED strip for 95-Platform and HP100 Platform (one side). Color: [#COL]. | $4,679 |
| 6560-0085 | Ladder climbing lights Luma Bar Pathfinder LED strip for 95-Platform and HP100 Platform (both sides). Color: [#COL]. | $9,358 |
| 6560-0086 | Quartz light Fire Research Focus 1500W/240V model FCA540-M15-CLP37-ON-SW with 37" pull up pole. [#LOC]. | $1,739 |
| 6560-0087 | Quartz light Fire Research Focus 1500W/240V model FCA570-M15 without pole. Location(s): [#LOC]. | $1,556 |
| 6560-0088 | Light Whelen Pioneer Plus model PFP1AC w/bail mount platform mounted. Requires 110-volt receptacle at tip option. Includes hardwired switch on platform console. Location(s): [#LOC]. | $1,584 |
| 6560-0089 | Light Whelen model PSR00XRR LED (EA) red 3rd brake light. Location: [#LOC]. | $202 |
| 6560-0090 | LED floodlight Whelen Pioneer with pole model KR-SB-2PFP1-W2-S-SL mounted at platform. Switched at lighthead and base console. Lights shall be located: [#LOC]. | $1,763 |
| 6560-0091 | LED floodlight Whelen Pioneer with pole model KR-SB-2PFP2AC-W2-S-SL powder coated black mounted at platform. Requires 110V twist lock receptacle at tip option. The light shall be located [#LOC]. | $2,409 |
| 6560-0092 | Wire guard for FRC Evolution light(s) on aerial. Location: [#LOC]. | $154 |

| Item No. | Description | |
|---|---|---|
| 6560-0093 | Light Whelen Pioneer Plus model PFP2AC powder coated black with permanent mount (ROM model KR-SB-6PFP2AC) powder coated black. Requires 110-volt receptacle at tip option. Location(s): [#LOC]. | $2,159 |
| 6560-0094 | Light Whelen Pioneer model KR-14PFP2AC platform mounted powder coated black. Requires 110 volt twistlock receptacle at tip option. Includes hardwired switch on platform console. The light shall be located [#LOC]. | $2,039 |
| 6560-0095 | Light Whelen Pioneer Plus model PFP1 w/bail mount platform mounted. Includes hardwired switch on platform console. Location(s): [#LOC]. | $1,384 |
| 6560-0097 | Light Fire Research Spectra LED 12V model SPA570-Q20 permanent mount. The light shall be fitted with a weather-resistant switch and hard-wired to the aerial tip power circuit. Location(s): [#LOC]. | $2,644 |
| 6560-0098 | Turntable work lighting shall be upgraded to LED IPOS. | $218 |
| 6560-0099 | Upgrade (4) inclonometer lights to LED. Grote model G6151. | $64 |
| 6560-0100 | Whelen LED model PFBP12C at jib boom (PR) RLP/HDT. | $1,098 |
| 6560-0101 | Aerial turntable control panel EON LED lights IPOS. | $211 |
| 6560-0102 | Light Whelen Pioneer Plus model PFP2AC with permanent mount. Requires 110V receptacle at tip option. Location(s): [#LOC]. | $2,159 |
| 6560-0103 | Whelen Pioneer PFP2AC 110V LED floodlight with pole mounted at platform. Requires 110V twist lock receptacle at tip option. The light shall be located [#LOC]. | $2,720 |
| 6560-0104 | Light Whelen Pioneer Plus 12V model PFP1P1 with PBAPEDD pedestal mount. Switched at light head and base console. Location(s): [#LOC]. | $1,545 |
| 6560-0105 | Light Whelen Pioneer Plus 120V model PFP1AP1 with PBAPEDA pedestal mount. Requires 110 volt twist lock receptacle at tip option. Location(s): [#LOC]. | $1,711 |
| 6560-0106 | Quartz light Fire Research Spectra 12V LED model SPA260-Q15 with surface mount and on/off sw on platform console. The light shall be located [#LOC]. | $1,980 |
| 6560-0107 | Light Fire Research Spectra 120V LED model SPA540-K20-CLP37-ON-SW with 37" pull up pole powder coated black. The light shall be located [#LOC]. | $3,270 |
| 6560-0108 | Light Fire Research Spectra 120V LED model SPA850-K20 with flat mount powder coated black. Location: [#LOC]. | $2,488 |
| 6560-0109 | Quartz light Fire Research Spectra 12V LED model SPA260-Q15 with surface mount powder coated black and on/off sw on platform console. The light shall be located [#LOC]. | $2,033 |
| 6560-0110 | Ladder climbing lights Federal Signal MicroPulse6 LED for 4 section aerial (one side). Color: [#COL]. | $3,914 |
| 6560-0111 | Quartz light 500W Magnafire 5000 model KR655-S. Requires 110-volt twist lock receptacle at tip option. The light shall be located [#LOC]. | $937 |
| 6560-0112 | Flood lights Whelen 12V PFP1 at base (PR) with pedestal mount. | $3,379 |
| 6560-0113 | Light Whelen Pioneer Plus 120V model PFP1AP1 with PBAPEDA pedestal mount located at tip of base section (PR). Requires 110 volt twist lock receptacle at tip option. | $3,528 |
| 6560-0114 | Luma Bar Pathfinder 20" LED strip to illuminate aerial pedestal's control panel. Applies only to diamond plate turntable consoles. | $1,204 |
| 6560-0115 | Light Fire Research Spectra LED 12V model SPA540-Q15-CLP37-ON-SW with 37" pull up pole. The light shall be located [#LOC]. | $2,614 |
| 6560-0116 | Light Whelen Pioneer Plus 120V model PSP1AP1 with PBAPEDA pedestal mount. Requires 110 volt twist lock receptacle at tip option. Location(s): [#LOC]. | $1,936 |
| 6560-0117 | Light Fire Research Spectra 12V LED model SPA540-Q15-CLP37-ON-SW with 37" pull up pole powder coated black. The light shall be located [#LOC]. | $3,270 |
| 6560-0118 | Light Rigid Industries 12V E2-Series 20" LED. Includes aluminum plate shield. Switched at turntable console. N/A with lifting eye at tip. Location: mounted below aerial at tip of fly section. | $1,824 |
| 6560-0119 | Light Rigid Industries Spot/Flood 12V E-Series 10" LED (PR). Includes aluminum plate shields. Switched at turntable console. Location: One each side at tip of fly section mounted parallel to main rail facing down. | $1,589 |
| 6560-0120 | Flood lights Whelen Micro Pioneer model MPBW at base (PR). | $1,585 |
| 6560-0121 | Light Whelen Pioneer Plus model PFP1AC w/bail mount permanently mounted recessed in the center of the bottom heat shield on the platform. Requires 110-volt receptacle at tip option. Includes hardwired switch on platform console. Midmount only. | $2,023 |
| 6560-0122 | Ladder climbing lights Luma-Bar Pathfinder LED strip for 4 section aerial (both sides). Color: Blue (base 2nd & 3rd fly)/Amber fly section from folding steps to tip. | $10,798 |
| 6560-0123 | Whelen LED model PFBP12C at tip of base (PR). | $1,098 |
| 6560-0124 | Whelen Pioneer PFP1AC 110V LED floodlight with pole mounted at platform. Requires 110V twist lock receptacle at tip option. The light shall be located [#LOC]. | $1,991 |

| Item No. | Description | |
|---|---|---|
| 6560-0125 | Flood/Spotlight Whelen PCP2AC 110V with external mount 30" tripod telepole. Includes 110V 20A twistlock receptacle. Location(s): [#LOC] | $3,576 |
| 6560-0126 | Marker lights additional amber LED Trucklite Model 35 (PR). Location: [#LOC] | $166 |
| 6560-0127 | FireTech model FT-WL3500-FT-W LED flood/spot light. Includes hardwired switch on turntable console. Location: left and right side of base section. | $1,425 |
| 6560-0128 | FireTech model FT-WL3500-FT flood/spot LED light at jib boom (PR) RLP/HDT. | $1,425 |
| 6560-0129 | Outrigger flood light (4) RLP/HDT. Truck-Lite LED model 81380. | $774 |
| 6560-0130 | Whelen Pioneer PFP2AC 110V LED floodlight with pole mounted at platform powder coated black. Requires 110V twist lock receptacle at tip option. The light shall be located [#LOC]. | $2,720 |
| 6560-0131 | Light Whelen Pioneer Plus 12V model PFP1P1 with PBAPEDD pedestal mount powder coated black. Switched at light head and base console. Location(s): [#LOC]. | $1,545 |
| 6560-0132 | Akron SceneStar 12V LED model ELSS-SLDC-SB-SW with non-telescoping swivel base. Switched at light head and base console. The light shall be located [#LOC]. | $1,688 |
| 6560-0133 | Light Whelen Pioneer Plus 120V model PFP1AP1 with PBAPEDA pedestal mount powder coated black. Requires 110 volt twist lock receptacle at tip option. Location(s): [#LOC]. | $1,711 |
| 6560-0134 | Flood/Spotlight Whelen PCP2AC 110V with external mount 30" tripod telepole. Includes 110V 15A twistlock receptacle. Location(s): [#LOC] | $3,576 |
| 6560-0135 | Rigid Industries model 24421 LED spot light. Includes hardwired switch on turntable console. Location: left and right side of base section. | $1,943 |
| 6560-0136 | Light Rigid Industries model 24411 LED flood light w/bail mount platform mounted. Includes hardwired switch on platform console. Location(s): [#LOC]. | $972 |
| 6560-0137 | Light Whelen Pioneer Plus model PFP1 with PBA103 recess mount. Includes hardwired switch on platform console. The light shall be located [#LOC]. | $1,393 |
| 6560-0138 | Whelen Pioneer PFP2 12V LED floodlight with pole mounted at platform. Includes switch on light head. The light shall be located [#LOC]. | $2,504 |
| 6560-0139 | Whelen Pioneer PCP2AC 110V LED floodlight with pole mounted at platform. Requires 110V twist lock receptacle at tip option. The light shall be located [#LOC]. | $2,720 |
| 6560-0140 | Light Whelen Pioneer Plus model PCP2AC flood/spot with side pedestal mount. Location(s): [#LOC]. | $2,794 |
| 6560-0141 | FireTech 11" 12V double stack bracket mounted light at tip. Includes switch on platform console. Location: [#LOC]. | $1,332 |
| 6560-0142 | FireTech model FT-WL3500-FT-W LED flood/spot light. Includes switch on lighthead and turntable console. Location: [#LOC]. | $712 |
| 6560-0143 | Quartz light Fire Research Focus 1000W/110V model FCA540-M10-CLP37-ON-SW with 37" pull up pole. The light shall be located [#LOC]. | $1,492 |
| 6560-0144 | Light Fire Research Mini Spectra LED 120V model SPA570-T14 permanent mount. Includes switch at lighthead. Requires 110-volt twist lock receptacle at tip option. Location(s): [#LOC]. | $2,032 |
| 6560-0145 | Quartz light Fire Research Spectra 12V LED model SPA260-Q20 with surface mount and on/off sw on platform console. The light shall be located [#LOC]. | $2,195 |
| 6560-0146 | FRC LED model SOBRITE at base (PR). | $1,485 |
| 6560-0147 | FireTech model FT-WL3500-60 LED flood light. Includes hardwired switch on turntable console. Location: left and right side tip of base. | $1,425 |
| 6560-0148 | Ladder climbing lights Luma Bar Pathfinder LED strip for CR137 (both sides). Color: Green (base 2nd 3rd & 4th fly)/Amber fly from folding steps to tip. | $16,731 |
| 6560-0149 | Sign plate illumination lights. (5) EON lights equally spaced at top of each sign plate. Lights wired through marker light switch in cab. | $1,518 |
| 6560-0150 | Light Whelen Pioneer Plus model PCP2 120V flood/spot with black housing and recess mount. Includes hardwired switch on platform console. The light shall be located [#LOC]. | $2,621 |
| 6560-0151 | Light Whelen Pioneer Plus model PFP1AC with black housing and bail mount platform mounted. Requires 110-volt receptacle at tip option. Includes hardwired switch on platform console. Location(s): [#LOC]. | $1,584 |
| 6560-0152 | Flood/Spotlight Whelen PCP2AC 110V powder coated black with external mount 30" tripod telepole. Includes 110V 20A twistlock receptacle. Location(s): [#LOC] | $3,576 |
| 6560-0153 | Light Rigid Industries model 50131 LED Dually D2 spotlight w/bail mount. Location(s): [#LOC]. | $552 |
| 6560-0154 | FRC model SOBRITE LED flood light located [#LOC]. | $743 |
| 6560-0155 | Outrigger flood light (4) RLP/HDT. Grote Trilliant Cube LED model 63981. | $1,219 |
| 6560-0156 | Light Whelen Pioneer Plus model PFP2AC with permanent mount powder coated black. Requires 110V receptacle at tip option. Location(s): [#LOC]. | $2,159 |
| 6560-0157 | Whelen model 3SC0CDCR platform lights (PR) in place of standard platform floor lighting. | $359 |
| 6560-0158 | Whelen Pioneer PFP1AC 110V LED floodlight powder coated black with pole mounted at platform. Requires 110V twist lock receptacle at tip option. The light shall be located [#LOC]. | $1,991 |

| Item No. | Description | |
|---|---|---|
| 6560-0159 | Quartz light Fire Research Spectra LED 110V model SPA260-K15 with surface mount. Requires 110-volt twist lock receptacle at tip option. The light shall be located [#LOC]. | $2,328 |
| 6560-0160 | Whelen Pioneer PFP2AC 110V LED floodlight with internal pole mounted at right side of turntable. | $2,925 |
| 6560-0161 | Light Fire Research Mini-Spectra 120V LED model SPA540-T14-CLP37-ON-SW with 37" pull up pole. The light shall be located [#LOC]. | $2,065 |
| 6560-0162 | Light Whelen Pioneer Plus model PFP2 12V with permanent mount powder coated black. Requires engineering approval. Location(s): [#LOC]. | $2,495 |
| 6560-0163 | Light Whelen Micro Pioneer model MPPWCS low profile pedestal mount. Switched at light head and base console. Location(s): [#LOC]. | $815 |
| 6560-0164 | Light Rigid Industries Marine Dually XL model 32311 LED flood light platform mounted (PR). Includes bail mounts and hardwired switch on platform console. Locate one each side below front platform step. | $929 |
| 6560-0165 | Floodlight Whelen PFP1AC 110V with external mount 30" tripod telepole. Includes 110V 20A twistlock receptacle. Location(s): [#LOC] | $2,894 |
| 6560-0166 | Light Whelen Pioneer Plus model PFP2AC 120V with recess mount powder coated black. Requires 110-volt receptacle at tip option. Includes hardwired switch on platform console. The light shall be located [#LOC]. | $2,621 |
| 6560-0167 | Light Whelen Pioneer Plus model PCP2AC flood/spot with pedestal mount. Location(s): [#LOC]. | $2,794 |
| 6560-0168 | Light Whelen Pioneer Plus model PFP2 12V with recess mount. Includes hardwired switch on platform console. The light shall be located [#LOC]. | $2,392 |
| 6560-0169 | Light Rigid Industries Spot/Flood 12V E-Series 10" LED (PR). Includes aluminum plate shields. Switched at turntable console. Location: One each side forward and rearward of sign plates on base section. | $1,589 |
| 6560-0170 | Light Whelen Pioneer Plus model PCP2 120V flood/spot with recess mount. Includes hardwired switch on platform console. The light shall be located [#LOC]. | $2,621 |
| 6560-0173 | Light Whelen 12V Pioneer Plus model PFS2 flood/spot with pedestal mount. Switched at light head and base console. Location(s): [#LOC]. | $2,375 |
| 6560-0176 | Light Whelen Micro Pioneer model MPPWCS low profile pedestal mount powdeer coated black. Switched at light head and base console. Location(s): [#LOC]. | $815 |
| 6570-0001 | Outrigger alarm RLP/HDT. Preco with warble tone. | $275 |
| 6570-0003 | 110V/15A twist lock receptacle at tip. | $2,875 |
| 6570-0007 | Intercom Speaker - additional located at the monitor. | $727 |
| 6570-0008 | Intercom aerial 2-way. Atkinson Dynamics (Federal). Speaker to be located to rear of platform on Bronto units. | $1,607 |
| 6570-0009 | Intercom aerial 3-way. Atkinson Dynamics (Federal). Speaker to be located to rear of platform on Bronto units. | $3,219 |
| 6570-0010 | Aerial Information System (AIS) for ladder. | $7,848 |
| 6570-0011 | Aerial Information System (AIS) for ladder. Includes engine information. | $8,730 |
| 6570-0012 | Aerial Information System (AIS) for platform. | $10,250 |
| 6570-0013 | Aerial Information System (AIS) for platform. Includes engine information. | $11,510 |
| 6570-0014 | Class1 aerial information center. | $3,841 |
| 6570-0015 | 110V/20A twist lock receptacle at tip. | $2,875 |
| 6570-0017 | Duplex receptacle at tip with (1) 3-prong NEMA 5-15 and (1) twist lock NEMA L5-15 receptacle. | $2,923 |
| 6570-0018 | Extension alarm for aerial. Alarm to sound at turntable console when aerial is near full extension. | $576 |
| 6570-0019 | Platform floor lights additional (4). Lights to match standard floor lights. | $246 |
| 6570-0021 | Duplex receptacle at tip with 3-prong NEMA 5-15 outlets. | $2,923 |
| 6570-0022 | Air horn switch at aerial turntable control console. Switch to be labeled ''Air Horn''. | $143 |
| 6570-0023 | Firepower receptacle at tip. | $2,909 |
| 6570-0024 | Laser jack pad spotting lights (4). | $4,736 |
| 6570-0026 | Laser jack pad spotting lights (2). | $2,606 |
| 6570-0028 | Air horn switch at aerial turntable control console. Switch to be a red button type and be labeled ''Air Horn''. | $143 |
| 6570-0029 | Light with alarm on turntable console for low eng oil press high water temp low voltage and low air press. | $365 |
| 6570-0030 | 110V/20A duplex household receptacle at tip. | $2,875 |
| 6570-0032 | Aerial Information System (AIS) for ladder. Includes engine information. System will not display extension or available tip load due to temporarily disconnected pull encoder. To be reconnected once updated HP78 software is loaded into system. | $8,730 |
| 6570-0033 | Air horn switch at aerial turntable control console. Switch to be labeled "Evacuation Alert". | $143 |

| Item No. | Description | |
|---|---|---|
| 6570-0034 | Additional 110V/20A twist lock receptacle at tip. Requires 110v to tip option. Location: opposite standard at tip. | $333 |
| 6570-0035 | 110V/15A twist lock receptacle at tip. Wiring from breaker box to tip to be 220V. | $2,986 |
| 6570-0036 | Akron 9313 auxiliary waterway discharge vlv control on turntable console. Requires waterway discharge with Akron electric valve and three available collector rings. | $1,233 |
| 6570-0038 | Cradle alignment light on turntable console. | $562 |
| 6570-0039 | 110V/20A twist lock receptacle at tip. Wiring from breaker box to tip to be 220V. | $2,986 |
| 6570-0040 | 110V/30A twist lock receptacle at tip. | $2,986 |
| 6570-0041 | 110V receptacle at tip to be mounted outboard of inside working area of fly section to provide clear space inside fly section. | $126 |
| 6570-0042 | 120V/250V 20A Daniel Woodhead Non-NEMA model 67W08 receptacle at tip. | $3,276 |
| 6570-0043 | 110V/20A twist lock receptacle at tip. Receptacle power is provided via inlet receptacle (not generator/breaker box). Includes a [#COL] cover. Location: [#LOC]. | $2,986 |
| 6570-0045 | Switch at aerial turntable control console to disable flashing light at aerial tip. Switch to be labeled ''Flashing Light''. | $143 |
| 6570-0046 | 12 VDC junction box located outside of platform near the breathing air block (no outlet power source only). This 12 VDC circuit shall be activated with aerial master. | $324 |
| 6570-0047 | (2) 110v circuits to tip. (1) with a 20A twist lock recept in platform and (1) to supply power to quartz lights. Both to include 15A breakers. Aramco Bronto only. | $2,875 |
| 6570-0048 | (2) 110v circuits to tip. (1) with a 20A household recept in platform and (1) to supply power to quartz lights. Both to include 15A breakers. Aramco Bronto only. | $2,875 |
| 6570-0049 | Additional 110V/20A household receptacle at tip. Requires 110v to tip option. Location: opposite standard at tip. | $333 |
| 6570-0050 | Aerial Information Center (AIC) for 95-Platform and HP95MM. | $4,081 |
| 6570-0051 | 110V/15A Hubble twist lock receptacle at tip. Includes grey weatherproof cover. | $2,875 |
| 6570-0052 | 12 volt power point wired battery hot at tip. | $61 |
| 6570-0054 | Deadman foot switch at turntable for aerial controls. | $314 |
| 6570-0055 | Additional programming instructions: momentary laser jack pad switch to be provided with 30 second timer. | $257 |
| 6570-0056 | Additional rung alignment light. Whelen model 3SA00FAR amber light. Locate on aerial control panel where intercom controls typically mount. | $276 |
| 6570-0057 | Platform alignment lights on rear of platform. One visible from turntable console and one from cab. | $633 |
| 6570-0058 | 12 Volt connector at ladder tip for Akron electric ladder pipe. | $85 |
| 6570-0059 | Q2B switch at aerial turntable control console. Switch to be labeled "Evacuation Alert". | $143 |
| 6570-0060 | Reel at tip of base for providing power to ladder tip. | $4,770 |
| 6570-0061 | Additional 12volt power shall be provided to the ladder tip. The power cabling shall consist of two (2) 2-gage wires run to the ladder tip in flexible tracking. | $3,315 |
| 6570-0062 | Command Light LCAS Laser Collision Avoidance System w/Stainless Steel Armor guard (PR) model #LC130. Wired to aerial master. Locate one each side at tip of ladder. | $3,907 |
| 6570-0063 | Generator switch on Bronto control panels to be wired to turn on / off the E-ONE installed hyd generator. Switches provided by Bronto. | $178 |
| 6570-0064 | 110V/15A Daniel Woodhead twist lock receptacle at tip. | $3,075 |
| 6570-0065 | Aerial battery volt gauge on turntable. | $399 |
| 6570-0066 | 12 volt power point wired battery hot. Location aerial turntable. | $61 |
| 6570-0067 | Command Light LCAS Laser Collision Avoidance System (EA) model #LC130. Wired to aerial master. Locate driver side at tip of ladder. | $1,954 |
| 6570-0068 | Aerial Information Center (AIC) for 95-Platform and HP95MM. Turntable location only. | $3,647 |
| 6570-0069 | Additional rung alignment light at tip of ladder. Whelen model 3SA00FAR amber light. Locate on aerial control panel where intercom controls typically mount. | $276 |
| 6570-0070 | Whelen model UFM8 LED flasher. Flasher will control warning lights ipo internal flashers. | $579 |
| 6600-0000 | Folding ladder bracket. Locate inside the right side fly section for a FL-10. | $608 |
| 6600-0001 | Slide out roof ladder bracket. Locate outside base section for a [#LOC]. Available on 95RM 110 CR100 and HM100. | $1,847 |
| 6600-0002 | Roof ladder bracket J style mount. Locate outside base section for a [#LOC]. Available on HP75/78 HP100 and HP95. | $1,902 |
| 6600-0003 | Roof ladder bracket lift out. Locate inside the left side fly section for a PRL-12. Avail on 95-Platform 95MM and HP100 Platform. | $349 |
| 6600-0004 | Lift out style roof ladder bracket. Locate outside base section for a [#LOC]. Available on 95RM 110 CR100 and HM100. | $1,847 |

| Item No. | Description | |
|---|---|---|
| 6600-0005 | Roof ladder bracket lift out. Locate inside the left side fly section for a PRL-14. Avail on 95-Platform 95MM and HP100 Platform. | $349 |
| 6600-0006 | Roof ladder bracket lift out. Locate inside the left side fly section for a PRL-16. Avail on 95-Platform 95MM and HP100 Platform. | $349 |
| 6600-0008 | Roof ladder bracket lift out. Locate inside the left side fly section for a 775A-12. Avail on HP100P 95RM and 95MM. | $349 |
| 6600-0009 | Parapet roof ladder bracket for platform. For use with Alcolite and Duo Safety roof ladders (not included). Available on HP100 Platform HP95MM Platform and 95-Platform with angle corners. | $1,914 |
| 6600-0011 | Roof ladder bracket lift out. Locate inside the right side fly section for a 775A-10. Avail on HP100P 95RM and 95MM. | $349 |
| 6600-0012 | In addition to the lift-out ladder bracket in the fly section a guard plate shall be installed on the inside of the fly section. To guard against the roof ladder hooks from accidently following into the ladder fly structure when the aerial is extending or retracting. | $147 |
| 6600-0013 | Roof ladder bracket lift out. Locate inside the right side fly section for a PRL-14. Avail on 95-Platform 95MM and HP100 Platform. | $349 |
| 6600-0015 | Lift out style roof ladder bracket. Locate outside base section for a 16' roof ladder PRL-16 on left side of base section. Includes additional bracket for ladder support. Available on 95RM 110 CR100 and HM100. | $2,468 |
| 6600-0016 | Roof ladder bracket lift out. Locate inside the left side fly section for a 775-DR 12'. Avail on HP100P 95RM and 95MM. | $349 |
| 6600-0017 | Roof ladder bracket lift out. Locate inside the left side fly section for a 775A-14. Avail on HP100P 95RM and 95MM. | $349 |
| 6700-0000 | Swirled plate heat shields on sides and bottom of Bronto platform. | $2,178 |
| 6700-0002 | Chassis mounting for RLP. Includes hydraulic pumps. | $7,477 |
| 6700-0003 | Stokes basket mounting bracket for RLP. Locate on driver's side of base section painted boom color. | $1,155 |
| 6700-0004 | 3" Pipe and flange for 2nd monitor on RLP/HDT. Bronto Supplied. Second monitor reduces live load to 750 lbs. | $1,384 |
| 6700-0005 | Two (2) year service parts kit HDT. Bronto Supplied | $9,982 |
| 6700-0006 | Two (2) year parts service kit RLP. Bronto Supplied | $8,004 |
| 6700-0007 | Stokes basket receiver. Bronto Supplied. Does not include stokes basket. Requires aluminum stokes mounting brackets. | $1,051 |
| 6700-0008 | Stokes basket receiver brackets aluminum RLP/HDT. Requires Bronto supplied stokes receiver. | $730 |
| 6700-0009 | Paint booms special color. Bronto Supplied. Booms turntable lift cylinders console and platform framework to be [#COL]. | $2,657 |
| 6700-0010 | Painted smooth plate heat shields (cage color) on sides and bottom of Bronto platform. | $1,962 |
| 6700-0011 | Intensifier for platform hydraulic tool outlets RLP/HDT. | $4,627 |
| 6700-0012 | Intensifier for bumper mounted hydraulic tool reel RLP. | $9,102 |
| 6700-0013 | Tropical oil for Bronto (Required in Southwest USA and other similar hot climate areas). | $252 |
| 6700-0014 | Artic oil for Bronto (Required in Canada and other similar cold climate areas). | $2,358 |
| 6700-0015 | Platform tool outlet. Includes flow / pressure block with 2000 PSI 7-9 GPM flow. | $977 |
| 6700-0016 | Chassis mounting for HDT. Includes Bronto supplied hydraulic pumps. | $3,872 |
| 6700-0017 | Cooler for Bronto RLP tool circuit(s). Located on officer side forward top of body. | $3,375 |
| 6700-0019 | Turntable extension with handrails. (Bronto supplied with E-ONE non-slipcoating) | $3,829 |
| 6700-0020 | Intensifier for bumper mounted hydraulic tool reel RLP (pair). | $12,806 |
| 6700-0021 | Paint booms special metallic color. Bronto supplied. Booms turntable lift cylinders and console to be Dupont [#COL]. | $10,041 |
| 6700-0023 | Cooler for Bronto HDT generator and / or tool circuit. Bronto installed on boom support. | $1,841 |
| 6700-0024 | Wind speed indicator. RLP only. | $874 |
| 6700-0025 | Steam port for waterway 3/4" NPT with plug. Locate in piping at lower end of main boom facing down. | $252 |
| 6700-0026 | (2) extra slip rings for a total of 32. Bronto supplied. | $319 |
| 6700-0027 | Wind speed indicator. HDT only. Includes displays at the turntable and platform. | $4,392 |
| 6700-0028 | Safety guide rail on jib boom. Bronto supplied. HDT only. | $5,124 |
| 6700-0029 | Camera pkg for Bronto. Includes VIDO color camera at platform and Viewtech 6.8" monitor at turntable console. Bronto supplied and installed. | $22,397 |
| 6700-0030 | Main boom cradling limit switch. | $696 |
| 6700-0032 | Safety Belt Anchor additional to center rear wall. | $1,882 |

| Item No. | Description | |
|---|---|---|
| 6700-0033 | Camera pkg B-SEC for Bronto. Includes pan/tilt/zoom camera on platform and portable wireless control unit. Also includes optional LCD screen and camera controls at turntable. Bronto supplied and installed. | $28,506 |
| 6700-0034 | Ultrasonic collision guard sensors (4) below platform for RLP+. Bronto supplied and installed. | $4,655 |
| 6700-0035 | Ultrasonic collision guard sensors (10) for RLP+. Sensors located (4) below platform (2) frt and (2) each side. Bronto supplied and installed. | $11,637 |
| 6700-0036 | Handrail 18" (PR) located exterior mounted one each side of left side platform door. Bronto only. | $237 |
| 6700-0037 | Indicator for dirty hydraulic oil return filter. RLP+ only. Bronto supplied and installed. | $552 |
| 6700-0038 | Camera mounted at knuckle of aerial viewing jib boom and platform. Image to be viewed in color display at turntable and platform consoles. RLP+ only. Bronto supplied and installed. | $2,708 |
| 6700-0039 | Voltage detection system. RLP+ only. Bronto supplied and installed. | $3,586 |
| 6700-0040 | Painted smooth plate heat shields (Boom color) on sides and bottom of Bronto platform. | $1,962 |
| 6700-0041 | Waterway pressure below turntable to be shown in aerial control panel displays at turntable platform and rear body. RLP+ only. Bronto supplied and installed. | $582 |
| 6700-0042 | Low aerial hyd oil level indicator in aerial control panel displays at turntable platform and rear body. Includes audible alarm. RLP+ only. Bronto supplied and installed. | $229 |
| 6700-0043 | Guard over E-Stop switch at platform control console. Bronto supplied. | $42 |
| 6700-0044 | Bronto Manuals - French IPOS. The printed manual and one copy of the CD manual to be in French. One copy of manual to be in English for E-ONE Tech Support. Bronto Supplied. | $523 |
| 6700-0045 | Deadman foot switches for aerial controls at turntable and in platform to be the full guarded style IPOS. Bronto Supplied. | $228 |
| 6700-0046 | Turntable handrails to have two equally spaced horizontal crossbars. Bronto supplied. | $331 |
| 6700-0047 | Mounting brackets for RLP/HDT Bronto stokes basket receiver. Locate on top of body to rear of aerial platform. Requires Bronto supplied stokes receiver. | $343 |
| 6750-0000 | Aerial sign plates 10 x 144 (PR). Available on Booms HP75 and HP100 only. Does not include lettering. Color: [#COL]. | $1,562 |
| 6750-0001 | Aerial sign plates 16 x 144 (PR). Available on LTH100 HP100L HPS105L HP95 and HP100P only (requires 6750-0014 for special bracket on HP100P if there are not ladder brackets on each side). Does not include lettering. Color: [#COL] | $1,753 |
| 6750-0002 | Aerial sign plates 22 x 144 (PR). Available on HM100 HM110 95 CR100 and CR137 only. Does not include lettering. Color: [#COL]. | $1,942 |
| 6750-0004 | Aerial sign plates 12 x 144 (PR). Available on HP78 HP100 and HP100 platform only. Does not include lettering. Color: [#COL]. | $1,626 |
| 6750-0006 | Aerial sign plates 16 x 144 driver and 12 x 144 officer. Does not include lettering. Color: Job color. | $1,795 |
| 6750-0007 | Sign plate for rear of aerial turntable handrails. To be two piece painted smooth aluminum plate split in the center and hinged on each side. Does not include lettering. Color: [#COL] | $822 |
| 6750-0009 | Aerial sign plates 10 x 168 (PR). Available on HP75/78. Does not include lettering. Color: [#COL] | $1,823 |
| 6750-0010 | Brackets for 22" x 144" aerial sign plate. For use with roof ladder bracket on opposite side. Available on aerials with aerial external extension system. | $1,680 |
| 6750-0011 | Aerial sign plates 22 x 144 (PR) un-painted. Available on HM100 HM110 95 and CR100 only. Does not include lettering. | $1,668 |
| 6750-0013 | Sign plate for rear of aerial turntable handrails. Single piece un-painted smooth aluminum plate. Does not include hinges or lettering. | $500 |
| 6750-0014 | Brackets to allow for a 16" x 144" aerial sign plate on a HP100 Platform. Requires roof ladder bracket on opposite side. Does not include sign plates. | $259 |
| 6750-0015 | Aerial sign plate / hard suction hose storage box pkg. Includes a 12 x 144 sign plate on left side of base and a hard suction storage box with nylon straps on right side of base. Outer wall of box to be used as sign plate. Does not include lettering. Color: job color. | $1,840 |
| 6750-0016 | Aerial sign plates 16 x 120 (PR). Available on HP95 only. Does not include lettering. Color: [#COL] | $1,690 |
| 6750-0017 | Sign plate 12" x 18" (PR) shall be bolted to the outside of the fly section painted FLNA4006 white. Locate at tip of fly section one each side. | $381 |
| 6750-0018 | Aerial sign plate / hose storage box pkg. Includes a 22 x 144 sign plate on right side of base and a hose storage box w/hinged cover on outboard side of base. Box to be smooth plt approx 5" wide x 140" long x 22" deep. Lid to be hinged on outboard side with a gas shock hold-open / hold-close. Floor to have extruded alum slats. Outer wall of box to be used as sign plate. Does not include lettering. Color: FLNA 4030 White. | $2,437 |

| Item No. | Description | |
|---|---|---|
| 6750-0019 | Aerial sign plates 12 x 144 (PR). Available on HP78 HP100 and HP100 platform only. Does not include lettering. Unpainted. | $1,381 |
| 6750-0020 | Sign plate for rear of aerial turntable handrails. Single piece painted smooth aluminum plate. Does not include hinges or lettering. Color: [#COL]. | $577 |
| 6750-0021 | Brackets to allow for a larger than standard aerial sign plate. Requires roof ladder bracket on opposite side. Does not include sign plates. | $259 |
| 6750-0022 | Aerial sign plates 10 x 144 (PR) with beveled edges. Available on Booms HP75 and HP100 only. Does not include lettering. Color: Job Color. | $1,718 |
| 6750-0023 | Brackets to allow for a 22" x 144" aerial sign plate on a HP100 Platform. Requires roof ladder bracket on opposite side. Does not include sign plates. | $259 |
| 6850-0002 | Pump panel control station. HP75 / HP78 and 50' rear mount boom. | $3,690 |
| 6850-0003 | Ladder tip controls. | $10,893 |
| 6850-0004 | Short Jack System HP75 / HP78. | $8,646 |
| 6850-0005 | Lock for ladder controls. 50/HP75/HM100/HP100/CR100/110 only. | $276 |
| 6850-0006 | Additional handheld jack controller at rear of body. Locate in rear jack control box. Includes selector switch at aerial master panel. | $2,385 |
| 6850-0008 | Platform leveling system to allow adjustment of platform pivot angle from cab. Includes light on back of platform visible by driver to indicate platform is in alignment with ladder. | $2,519 |
| 6850-0009 | Hinged cover for platform control console. Diamond plate with rubber hood latch to hold closed. | $442 |
| 6850-0010 | Connector for handheld jack control at rear of body. Loc: [#LOC] | $535 |
| 6850-0011 | Gas spring for aerial ladder console cover. To hold cover open at 90 degrees to the side. | $177 |
| 6850-0012 | Hinged cover for platform control console. Swirl finish smooth plate with gas spring hold-open. | $549 |
| 6850-0014 | Aerial control station (add'l) located at pump operator's panel. Includes upgrade to elect / hyd aerial control system and monitor controls at pump panel. | $13,780 |
| 6850-0015 | Aerial turntable console lowered approx 4" to allow for stations with arched doors. | $934 |
| 6850-0017 | Envelope controls HP100 Platform. Forward extension of aerial to be restricted due to 260" wheelbase. | $705 |
| 6850-0019 | Vinyl platform console control cover. Color: [#COL]. | $262 |
| 6850-0020 | Aerial control stations (add'l) located at pump operator's panel and ladder tip. Includes upgrade to elect / hyd aerial control system and monitor controls at pump panel. Tip controls to be "creep" style. | $16,788 |
| 6850-0021 | Additional handheld jack controller at front of cab. Locate in front bumper officer side tray. Includes selector switch at aerial master panel. | $2,385 |
| 6850-0023 | Retraction stops for ladder. Required to allow for nozzle guard on HP75/78 with 225-230 WB S/A and all T/A. | $498 |
| 6850-0024 | Handheld jack controller at rear of body. Locate in rear jack control box. This is in addition to standard aerial master panel also at rear of body. | $1,982 |
| 6850-0025 | Advanced Aerial Control System - Ladder. Includes monitor stow / deploy cradle alignment lt and display with flowmeter. | $14,423 |
| 6850-0027 | Ladder tip controls. For use with AACS only. | $2,052 |
| 6850-0028 | Ladder controls at pump panel. For use with AACS only. | $3,036 |
| 6850-0029 | Short Jack System HP75 / HP78. For use with AACS only. | $4,764 |
| 6850-0031 | Advanced Aerial Control System - Ladder. Includes color display at turntable body protection monitor stow / deploy cradle alignment lt. | $27,343 |
| 6850-0032 | Advanced Aerial Control System - Ladder. Includes cradle alignment lt and display. | $12,972 |
| 6850-0033 | Retraction stops for ladder. Required to allow for TFT monitor with VUM on HP100 ladder with 240 WB. | $498 |
| 6850-0035 | Color aerial display at pump operator's panel. For use with deluxe AACS with pump panel aerial controls only. | $2,808 |
| 6850-0036 | Wireless aerial controls (in addition to standard). For use with deluxe AACS only. | $10,548 |
| 6850-0038 | Advanced Aerial Control System - Platform. Includes color display at turntable and platform body protection monitor stow / deploy cradle alignment lt. | $11,510 |
| 6850-0039 | AACS Ramp settings - Special. All three settings to be programmed at the standard .5 second ramp. | $396 |
| 6850-0044 | Multi-level turntable console mounted to tube style pedestal mount. Cover to be 1-piece design that pivots forward. (95-platform and HP/HPS100 Platform only) | $240 |
| 6900-0000 | Aerial flow test - 3rd party. | $466 |
| 6900-0001 | Aerial 2003 NFPA Certification | $3,612 |
| 6900-0002 | Aerial 2009 NFPA Certification. | $3,732 |

| Item No. | Description | |
|---|---|---|
| 6900-0004 | Aerial 2009 NFPA Certification. Performed by UL. | $7,852 |
| 6900-0005 | Aerial flow test - 3rd party. | $466 |
| 6900-0006 | Aerial flow test - 3rd party. | $466 |
| 6900-0007 | Aerial 2016 NFPA Certification. | $3,732 |
| **MISC. EQUIP** | | |
| 7000-0003 | Akron Brass stacked tips w/stream shaper. Stream Shaper 3485 & Stacked Tips style 3499. | $633 |
| 7200-0000 | Adapter Chrome 3"MNST x 2.5"FNST with Plug | $212 |
| 7200-0001 | Adapter Chrome 3"FNST x 2.5"MNST with Cap. | $244 |
| 7200-0002 | Swivel Chrome Connector 4.5"FNST x 2.5" FNST Long Handle | $245 |
| 7200-0003 | Chrome Swivel Connection 5"FNST x 2.5"FNST Long Handle | $339 |
| 7200-0004 | Chrome Swivel Connector 5"FNST x 4.5"FNST Long Handle | $365 |
| 7200-0005 | Chrome Swivel Connector 6"FNST x 4.5"FNST Long Handle | $463 |
| 7200-0006 | Discharge Adapter 2.5"FNST x 2.5"MNST Spec with Cap - Special adapter with specified thread. | $150 |
| 7200-0007 | Adapter 2.5"MNST x 2.5"FNST Spec with Plug - Special adapter with specified thread. | $186 |
| 7200-0008 | Adapter Wye 2.5"FNST x 1.5"MNST. | $585 |
| 7200-0009 | Adapter Wye 4"FNST x (2) 2.5" FNST | $749 |
| 7200-0010 | Adapter 2.5" FNST x 2.5" F British Instantaneous. | $212 |
| 7200-0011 | Adapter 2.5" MSNT x 2.5" M British Instantaneous. | $159 |
| 7200-0012 | Adapter Collector 5"FNST x (3) 2.5"M British Instantaneous. | $819 |
| 7200-0013 | Adapter Collector 6"FNST x (3) 2.5"M British Instantaneous | $951 |
| 7200-0014 | Adapter 2.5"FNST x 4" Storz | $358 |
| 7200-0015 | Adapter 3"FNST x 4" Storz with cap. | $376 |
| 7200-0016 | Adapter 3"FNST x 5" Storz and insert cap. | $461 |
| 7200-0017 | Swivel connector 5"FNST x 4" Storz with tethered Cap. | $441 |
| 7200-0018 | Swivel Connector 4" FNST x 4" Storz with Tethered Cap. | $333 |
| 7200-0019 | Swivel connector 4"FNST x 5" Storz with tethered cap. | $419 |
| 7200-0020 | Swivel connector 5"FNST x 5" Storz with tethered cap. | $506 |
| 7200-0021 | Swivel Connector 6" FNST x 4" Storz with Tethered Cap. | $483 |
| 7200-0022 | Swivel Connector 6" FNST x 5" Storz with Tethered Cap. | $522 |
| 7200-0023 | Swivel Connector 3" FNST x 4" Storz 30 Degree Elbow with Tethered Cap. | $511 |
| 7200-0024 | Swivel Connector 3"FNST x 5" Storz 30 Deg Elbow with Tethered Cap. | $636 |
| 7200-0025 | Swivel Connector 4"FNST x 4" Storz 30 Deg Elbow with Tethered Cap. | $348 |
| 7200-0026 | Swivel Connector 4" FNST x 5" Storz 30 Deg Elbow with Tethered Cap. | $428 |
| 7200-0027 | Adapter 2.5"MNST x 2.5" Storz with 30 degree droop and insert cap. | $162 |
| 7200-0028 | Adapter 5" FNST x 5" Storz 30 degree with tethered cap. | $283 |
| 7200-0030 | Adapter 5" FNPT X 6" MNST Chrome. | $259 |
| 7200-0031 | 1.5" Chrome Cap w/Chain. | $19 |
| 7200-0032 | Adapter 2.5"FNST x 2.5" Storz. Includes cap and connector. | $160 |
| 7200-0035 | Adaptor 30 degree for rear 2.5" discharge. To be 2.5" FNST x 2.5" MNST. Ship loose. | $204 |
| 7200-0036 | Intake 6" Elkhart Elk-O-Lite 9786 Piston Valve. Ship Loose. | $2,123 |
| 7200-0041 | Adapter 2.5FNST x 2.5M Alberta Mutual Aid Threads (AMA 2.99x8Tip) with Cap | $195 |
| 7200-0042 | Adapter 2.5MNST x 2.5F Swivel Alberta Mutual Aid Threads (AMA 2.99x8Tip) with Plug | $204 |
| 7200-0043 | Intake 6" Northline FSGR Piston Valve with intake Relief. ship loose | $1,234 |
| 7200-0044 | Adapter.75 FGHT (garden hose) x 1.5" Storz | $91 |
| 7200-0045 | Intake gated relief valve. 6"FNST x 6"MNST. | $1,074 |
| 7200-0046 | Swivel Pyrolite connector 2.5"FNST x 2.5" FNST locker lug. | $104 |
| 7200-0047 | Adapter Pyrolite 2.5"MNST x 2.5"MNST. | $58 |
| 7200-0048 | Chrome Swivel Connector 6"MNST x 4"FNST | $663 |
| 7200-0054 | Adapter wye suction 6"FNST x (3) 2.5" FNST | $1,832 |
| 7200-0055 | Adapter 2.5" MNST x 2.5" FBritish Instantaneous | $119 |
| 7200-0056 | Adapter 2.5FNST x 2.5M (3.031x7Tip) with Cap | $197 |
| 7200-0057 | Adapter 2.5MNST x 2.5F Swivel X (3.031X7TPI) with Plug | $204 |
| 7200-0058 | Adapter 2.5FNST x 2.5M (3.232x5Tip) with Cap | $197 |
| 7200-0059 | Adapter 2.5MNST x 2.5F Swivel (3.232x5Tip) with Plug | $204 |
| 7200-0060 | Adapter 2.5MNST x 2.5F (3.230x5Tip) with Cap | $197 |
| 7200-0061 | Adapter 2.5MNST x 2.5F Swivel (3.230x7TPI) with Plug | $204 |
| 7200-0062 | Adapter 4.5" FNST x 5" Storz. | $244 |
| 7200-0064 | Swivel Connector 4"FNST x 4" Storz 30Deg Elbow with Tethered Cap | $515 |
| 7200-0065 | Adapter Connector 3"MNST x 4" Storz with Tethered Cap | $366 |
| 7200-0066 | Adapter Gated Wye Akron Model 1480 with 1.5"FNST x (2) 1.5"MNST. | $729 |
| 7200-0068 | A 2.5" MNST x 2.5" FAMA with Plug Adapter | $77 |

| Item No. | Description | |
|---|---|---|
| 7200-0069 | A 2.5" FNST x 2.5" MAMA With Cap adapter shall be provided. | $109 |
| 7200-0071 | Adapter 1.5" FNST X 1.0" MNST w/Cap. | $90 |
| 7200-0074 | Swivel Connector 6"FNST x 5" Storz with 30 degree elbow and Tethered Cap | $525 |
| 7200-0078 | Adapter 1.5 FNST x 1.5 Storz for foam fills. | $114 |
| 7200-0079 | Swivel Chrome Connector 4"FNST x 2.5" FNST Long Handle | $162 |
| 7200-0081 | Swivel Connector 4"FNST x 4" Storz 30Deg Elbow without Tethered Cap | $353 |
| 7200-0082 | Adapter 2.5"MBCT w/cap x 4" Storz | $303 |
| 7200-0083 | Adapter 2.5"FBCT w/plug x 4" Storz | $316 |
| 7200-0084 | Adapter 1.5" FNST x 1.5" MNSH. | $57 |
| 7200-0085 | Swivel Connector 3"MNST x 5" Storz 30Deg Elbow with Tethered Cap | $547 |
| 7200-0086 | Adapter Chrome 3"FNST x 2.5"MNST | $234 |
| 7200-0087 | Swivel Connector 6"FNST x 5" Storz 30 deg Elbow with Tethered Cap. (Task Force Tip Adapt) | $603 |
| 7200-0090 | Adapter 2.5" female NST x 2.5" male British Instantaneous with cap | $117 |
| 7200-0091 | Adapter 2.5" female NST x 2.5" Male Detroit standard threads. | $109 |
| 7200-0092 | Cap 2.5" Detroit Standard Threads. | $80 |
| 7200-0093 | A 2.5" MNST x 2.5" FDetroit Standard with Plug Adapter. | $164 |
| 7200-0094 | Adapter 1.5" Female NST x 1" Male Mass Forestry Threads. ( 1.429 OD-11 threads per inch) | $63 |
| 7200-0095 | Akron 7980 Piston Intake Valve with 5" Storz outlet with cap. | $2,334 |
| 7200-0098 | A 2.5" MNST x 5" FNST with 5" Plug Adapter. | $529 |
| 7200-0101 | Adapter 2.5FNST x 2.5M British Columbia Threads (BCT 3.00x8Tip) with Cap. | $190 |
| 7200-0102 | Adapter 2.5MNST x 2.5F Swivel British Columbia Threads (BCT 3.00x8TPI) with Plug | $377 |
| 7200-0103 | Inlet valve gated w/relief and elbow. 4"FNST x 4" STORZ and cap. (Kocheck Model 40K40204) | $2,413 |
| 7200-0104 | Adapter 5" FNST x 4" MNST with cap. | $293 |
| 7200-0105 | Elkhart 18" Pipe Extender 8298EXw/8298. | $553 |
| 7200-0106 | Adapter 1.5 FNST x 1.5 Storz. | $114 |
| 7200-0107 | Adapter aluminum 3"FNST x 2.5"MNST with Cap. | $244 |
| 7200-0108 | Adapter 4" FNST x 5" Storz. | $244 |
| 7200-0109 | Adapter 4.5" FNST X 4.5" MNST Chrome. | $356 |
| 7200-0111 | Adapter 2.5" female NST x 2.5" male Cleveland 3.078 x 8TPI with cap. | $192 |
| 7200-0112 | Adapter 2.5MNST x 2.5F Swivel (Cleveland 3.078 x 8TPI) with Plug | $394 |
| 7200-0114 | Chrome adapter for 2.5" discharge. Includes 2.5" FNST x 1.5" NH thread without cap. | $56 |
| 7200-0115 | Swivel Connector 6"FNST x 4" Storz with 30 degree elbow and Tethered Cap | $525 |
| 7200-0116 | Adapter 2.5FNST x 2.5M Alberta Mutual Aid Threads (AMA 2.99x8Tip) | $116 |
| 7200-0117 | Swivel Connector 4"FNST x 6" MNST with 30 degree elbow and Cap. (Task Force Tip AH5NP) | $678 |
| 7200-0118 | A 3" MNST x 2.5" FAMA adapter W/Plug. | $346 |
| 7200-0119 | Adapter Gated Wye with 2.5"FNST x (2) 1.5"MNPSH. | $1,190 |
| 7200-0120 | Adapter 4" FNST X 3.5" MNST Chrome with cap. | $356 |
| 7300-0000 | Reducer Chrome 2.5"FNST x 1.5"MNST. | $75 |
| 7400-0000 | Chrome Intake elbow 2.5" MNST 45Deg | $197 |
| 7400-0001 | Chrome discharge elbow 3"FNST x 2.5"MNST 45 Deg | $261 |
| 7400-0002 | Chrome suction elbow 3"MNST x 2.5"FNST 45Deg | $261 |
| 7400-0003 | Chrome discharge elbow 3" 30 Degree. | $245 |
| 7400-0004 | Elbow 30 degree chrome swivel w/2.5"FNST x 2.5"MNST. | $75 |
| 7400-0005 | Chrome discharge elbow 2.5" 45 degree. | $197 |
| 7400-0006 | Chrome discharge elbow 2.5" FNST X 2.5" MCSA 45Deg chrome | $197 |
| 7400-0007 | Chrome discharge elbow 2.5" FCSA X 2.5" MCSA 30Deg chrome | $227 |
| 7400-0008 | Chrome discharge elbow 3.0" FNST X 2.5" MCSA 30Deg chrome. | $268 |
| 7400-0010 | Chrome discharge elbow 4" 30 Degree. | $472 |
| 7400-0011 | Chrome Intake elbow 2.5" MNST x 2.5" Female 3.187 x 6 thread per inch with a 2.5" Male 3.187 x 6 thread per inch chrome plug with chain 45 Degree | $252 |
| 7400-0012 | Chrome discharge elbow 2.5" FNST x 2.5" Male 3.187 x 6 thread per inch with a 2.5" Female 3.187 x 6 thread per inch chrome rocker lug cap with chain 45 Degree. | $241 |
| 7500-0000 | Ziamatic Air Pack Bracket (2PHS) Model #UN-6-30-2PHS. Shipped loose. | $321 |
| 7500-0001 | Ziamatic Air Pack Bracket (FPHS) Model #UN-6-30-3-FPHS. Shipped loose. | $325 |
| 7500-0002 | Universal air pack bottle bracket (EA). Shipped loose. | $156 |
| 7500-0004 | Bracket SCBA Lifeguard SmartDock Gen2 restraint system. Ship Loose. | $506 |
| 7550-0000 | ABC Extinguisher 10# w/Bracket. | $171 |
| 7550-0001 | ABC Extinguisher 12# w/Bracket | $269 |
| 7550-0002 | Extinguisher 15# CO2 w/bracket. | $453 |
| 7550-0003 | Extinguisher ABC 20# dry chemical w/bracket. Amerex model A411 | $251 |
| 7550-0004 | Extinguisher 2.5 Gallon Water Pressure w/Bracket. Amerex model A240 | $200 |

| Item No. | Description | |
|---|---|---|
| 7550-0005 | Extinguisher 15.5# Halotron with Vehicle Bracket | $614 |
| 7550-0006 | ABC Extinguisher 20# ABC w/Bracket. Mount bracket to floor just inside the interior on the officer's side rear of 30# extinguisher. | $177 |
| 7550-0007 | Amerex Extinguisher 30# DryChem w/Bracket. Mount bracket to floor just inside the interior on the officer's side forward of 20# extinguisher. | $683 |
| 7550-0008 | Extinguisher ABC 20# dry chemical w/bracket. Location: [#LOC]. | $251 |
| 7600-0000 | Axe bracket - shipped loose. | $101 |
| 7600-0001 | Flat Head Axe 6 lb. | $64 |
| 7600-0002 | Pick Head Axe 6#. | $81 |
| 7600-0003 | Flat Head Axe 6# with Fiberglass Handle. | $138 |
| 7600-0004 | Pick Head Axe 6# with Fiberglass Handle. | $142 |
| 7600-0005 | Pike Pole Fiberglass 6'. | $144 |
| 7600-0006 | Pike Pole Fiberglass 8'. | $95 |
| 7600-0007 | Pike Pole Fiberglass 10'. | $182 |
| 7600-0008 | Pike Pole Fiberglass 12'. | $192 |
| 7600-0009 | Pike Pole Mounting Tube Style (Each) | $228 |
| 7600-0013 | Hooligan Tool 36". | $287 |
| 7600-0014 | Hooligan Tool Bracket (Each). | $168 |
| 7600-0015 | Wheel Chocks 32" NFPA Compliant - Pair of Zico AC-32. Up to 32" diameter Tires. Includes mounting bracket. | $480 |
| 7600-0016 | Wheel chocks 44" NFPA compliant pair (PR) of Zico SAC-44. Up to 44" diameter tires. Includes mounting brackets. | $540 |
| 7600-0017 | Collins CL-12-M hand held spotlight (shipped loose) | $477 |
| 7600-0018 | Adjustable combination hydrant spanner wrench. | $86 |
| 7600-0019 | Spanner Wrench (2) #10 with Holder. | $180 |
| 7600-0024 | Crow Bar 36". | $19 |
| 7600-0025 | Crow Bar 50". | $133 |
| 7600-0026 | Crow Bar 60". | $55 |
| 7600-0027 | Bracket for Crow Bar (Each) | $247 |
| 7600-0028 | Cable Cutter Insulated 24" | $271 |
| 7600-0029 | Bolt Cutter 24". | $78 |
| 7600-0030 | Bolt Cutter 36". | $540 |
| 7600-0031 | Bracket for Cutter (Each) | $72 |
| 7600-0033 | Rescue Knife w/(6) Blades and (2) Keys ARFF. | $156 |
| 7600-0034 | Claw Tool 43" | $338 |
| 7600-0035 | Jack Hydraulic 5 Ton | $89 |
| 7600-0037 | Wheel Chocks Aluminum Zico AC-32 with mounting brackets. | $294 |
| 7600-0038 | Salvage Cover 12' x 18'. | $337 |
| 7600-0039 | Tool Roll Canvas w/o Tools | $444 |
| 7600-0042 | Booster Hose Spanner Wrench | $47 |
| 7600-0043 | First Aid Kit 24 Unit | $145 |
| 7600-0044 | First Aid Kit 36 Unit. | $282 |
| 7600-0045 | Shovel Plain | $93 |
| 7600-0046 | Emergency Rope 125' .625 Diameter. | $192 |
| 7600-0047 | Emergency Rope 125' .75 Diameter | $204 |
| 7600-0048 | Pompier Belt (Each) | $308 |
| 7600-0049 | Chain Saw 20 inch bar Gas powered. | $906 |
| 7600-0053 | Wheel Chocks Alum HGS Heavy Includes Brackets. | $301 |
| 7600-0056 | Plastic Tool Box 9.75" x 12.5" x 20" - FAA 10C Requirements for ARFF/Fire Trucks. | $72 |
| 7600-0057 | Wrench lug 2pc - lug wrench in two (2) pieces. Lug ends are 1.5" and 1.312" (BRT19951) with handle (BRT17899). | $119 |
| 7600-0058 | Wrench Hydrant w/2 Spanner Wrench Combination Set with Bracket. Meets FAA 10C Requirements for ARFF/Fire Trucks. | $136 |
| 7600-0060 | Saw Partner K12FD w/aluminum case. Meets FAA 10C requirements for ARFF/Fire trucks. Partner Model K12FD9514MK fire deptartment rescue saw 14". | $2,687 |
| 7600-0061 | Saw Partner K12FD w/Metal Case. Meets FAA 10C Requirements for ARFF/Fire Trucks. Partner Model K12FD9514STD fire department rescue saw 14". | $2,170 |
| 7600-0064 | Non Wedging Serrated Hand Axe with Fiberglass Handle | $235 |
| 7600-0069 | Pliers 7" Diagonal Cut. | $35 |
| 7600-0070 | Bracket for 43" Claw Tool installed [#LOC] | $74 |
| 7600-0078 | Cold Chisel 1x8. | $20 |

| Item No. | Description | |
|---|---|---|
| 7600-0080 | Sledge Hammer 8# with Fiberglass Handle | $58 |
| 7600-0084 | 12" Hacksaw with 12 Spare Blades. | $93 |
| 7600-0087 | Pike Pole Fiberglass 8 Ft w/ D-Handle. | $95 |
| 7600-0088 | Pike Pole 8 Ft. Firehooks Unlimited APH-8 pole. | $137 |
| 7600-0089 | Pike Pole 6 Ft. Firehooks Unlimited New York hook RH-6 pole. | $146 |
| 7600-0090 | Flat Head Axe 8# with Fiberglass Handle | $178 |
| 7600-0091 | Emergency rope 150' .625 diameter Max Wear white w/ orange tracer. | $260 |
| 7600-0092 | Rubber mallet with fiberglass handle. | $48 |
| 7600-0093 | Wrench Storz adjustable with holder. | $106 |
| 7600-0094 | Craftsman Tool Set 283 piece set with Allen Key set and 4 Drawer Tool Box. | $810 |
| 7600-0095 | Pike Pole 6 Ft. Firehooks Unlimited APS-6 pole. | $164 |
| 7600-0096 | Pike Pole 6' fiberglass Ziamatic IBM-6 | $162 |
| 7600-0097 | Pike Pole 8' fiberglass Ziamatic IBM-8 | $188 |
| 7600-0098 | Pike Pole 12' fiberglass Ziamatic IBM-12 | $240 |
| 7600-0099 | Pike Pole 8 Ft. Firehooks Unlimited APH-8 pole with D-Handle. | $157 |
| 7600-0100 | Pike Pole 10 Ft. Firehooks Unlimited APH-10 pole. | $200 |
| 7600-0101 | Pike Pole 12 Ft. Firehooks Unlimited APH-12 pole. | $220 |
| 7600-0102 | Pike Pole 6 Ft. Firehooks Unlimited APH-6 pole. | $124 |
| 7600-0103 | Pike Pole 6 Ft. Firehooks Unlimited fiberglass MPH-6 pole. Includes gas shut-off end. | $127 |
| 7600-0104 | Pike Pole 8 Ft. Firehooks Unlimited fiberglass MPH-8 pole. Includes gas shut-off end. | $149 |
| 7600-0105 | Pike Pole 12 Ft. Firehooks Unlimited fiberglass MPH-12 pole. Includes gas shut-off end. | $227 |
| 7600-0108 | Pike Pole 6 Ft. Akron UT-6-DWH with drywall hook. | $138 |
| 7600-0109 | Pike Pole 10 Ft. Akron UT-10-DWH with drywall hook. | $151 |
| 7600-0110 | Pike Pole 4 Ft. Akron UT-4-D-DWH with drywall hook and D-handle. | $138 |
| 7600-0111 | Pike Pole 12 Ft. Akron PP-12 with USA standard hook. | $179 |
| 7600-0112 | Pike Pole 8 Ft. Akron PP-8 with USA standard hook. | $150 |
| 7600-0113 | Pike Pole 6 Ft. Akron PP-6 with USA standard hook. | $137 |
| 7600-0115 | Pike Pole 8 Ft. Firehooks Unlimited New York hook RH-8 pole. | $153 |
| 7600-0116 | Pike Pole Fiberglass 6 Ft w/ D-Handle. | $111 |
| 7600-0117 | Pike Pole Fiberglass 12 Ft w/ D-Handle. | $137 |
| 7600-0118 | Pike Pole Fiberglass 4 Ft w/ D-Handle. | $106 |
| 7600-0119 | Trash Hook w/6' Fiberglass Pole & D-Handle. | $195 |
| 7600-0120 | Pike Pole 8 Ft. Firehooks Unlimited New York hook RH-8 pole with steel shaft and pry end. | $153 |
| 7600-0121 | Axe Paratech Topcut. | $146 |
| 7600-0122 | Spanner Wrench Akron SS-MP bracket with (4) Super Spanner wrenches. | $180 |
| 7700-0004 | Hard suction hose 6" X 10' with Pyrolite couplings. | $1,087 |
| 7700-0006 | Booster hose 100' long 1" 800 PSI. | $681 |
| 7700-0007 | Akron 1" 60gpm Pistol Grip Assault Nozzle | $735 |
| 7700-0010 | Hard Suction Hose 3" X 10' with Pyrolite Couplings. | $288 |
| 7700-0011 | Hard Suction Hose 4.5" X 10' with Pyrolite Couplings. | $662 |
| 7700-0012 | Hard suction hose 5" X 10' with Pyrolite couplings. | $797 |
| 7700-0013 | Hard Suction Hose 5" X 10' with Chrome Couplings | $938 |
| 7700-0015 | Hard Suction Hose 6" X 10' with Chrome Couplings. | $1,306 |
| 7700-0016 | Hard Suction Hose Rack 2.5" or 3" Hose (Each) | $251 |
| 7700-0017 | Soft Suction Hose 6" x 4.5" with Long Handle Chrome Couplings. | $1,620 |
| 7700-0018 | Soft Suction Hose 6" X 15' with Long Handle Chrome Couplings. | $1,393 |
| 7700-0020 | Booster hose 100' length of 3/4" 800 PSI. | $595 |
| 7700-0024 | Booster hose 1.25" x 150' w/1.5" NH coupling. | $2,086 |
| 7700-0025 | Hose double jacket 50' length 1.5" 600 PSI. | $217 |
| 7700-0026 | Double Jacket Hose 50' Length 2.5" 600PSI | $337 |
| 7700-0027 | Double Jacket Hose 50' Length 3" 600PSI | $423 |
| 7700-0028 | Elkhart 1" Pistol Grip Nozzle | $816 |
| 7700-0029 | Akron 1" Pistol Grip Assault Nozzle | $698 |
| 7700-0030 | Akron 1.5" Assault Nozzle | $755 |
| 7700-0031 | Nozzle Akron 1.5" pistol grip - 95 gpm. | $818 |
| 7700-0032 | Pistol Grip Dry Chem Nozzle 1" BTFT-DC5 w/1"NH Coupling | $603 |
| 7700-0033 | Nozzle Bracket (Each) | $83 |
| 7700-0039 | Air Hose .25 x 50ft Coupled with Male National Pipe Thread Ends. | $40 |
| 7700-0050 | Elkhart 282A Elk-O-Lite Stream Shaper | $192 |
| 7700-0051 | Elkhart ST-194 Elk-O-Lite Stacked Tips. | $494 |
| 7700-0052 | Elkhart SM-1250 Select-O-Matic Master Stream Nozzle | $1,174 |

| Item No. | Description | |
|---|---|---|
| 7700-0053 | PVC suction hose 6" X 10' with Pyrolite couplings. | $1,274 |
| 7700-0057 | Akron 1.5 Pistol Grip Nozzle Pre-set 125 GPM Model 4820 | $583 |
| 7700-0060 | Akron Quad Stacked Deluge Tips (2499). For use with Akron monitors. Ship Loose. | $477 |
| 7700-0064 | Booster Hose 100' x 1.5" Reeltex (Each) Niedner Reeltex fabric booster hose with couplings. | $727 |
| 7700-0065 | Nozzle Akron 5160 Manual Akromatic | $1,059 |
| 7700-0066 | Nozzle 1.5  20-95gpm TFT NH Threads Pistol Grip | $335 |
| 7700-0067 | Hose 1.75" x 75' with 2.5" BSS couplings. | $236 |
| 7700-0068 | Hose 2.5" X 100' with 2.5" BSS couplings. | $538 |
| 7700-0072 | Nozzle 2.5" TFT pistol grip with BSS coupling inlet. | $686 |
| 7700-0074 | Nozzle 1.5" Turbojet high pressure | $417 |
| 7700-0084 | Hard Suction Hose Rack 6" Hose (Each). | $388 |
| 7700-0097 | Soft Suction Hose 20ft 5" with 4.5" long handle female coupler on one end and a 4.5" long handle male coupler on the other end. | $1,620 |
| 7700-0098 | Hard Suction Hose 6" x 6' with Pyrolite Couplings | $884 |
| 7700-0106 | Kochek PVC Hard Suction Hose 6" x 8' with Pyrolite Couplings. | $835 |
| 7700-0107 | Kochek PVC Hard Suction Hose 4" x 10' with Storz Pyrolite Couplings. | $551 |
| 7700-0110 | Akron 1.5 pistol grip nozzle pre-set 150 GPM model 1763 wide-range turbojet nozzle. | $790 |
| 7700-0114 | Hard suction hose 6" x 8' with Pyrolite couplings. | $881 |
| 7700-0115 | Kochek PVC Hard Suction Hose 6" x 10' with Pyrolite Couplings. | $906 |
| 7700-0116 | 3" Double Jacket Hose with 2.5" couplings 50' Length 600PSI | $423 |
| 7700-0118 | Akron Brass stacked tips w/stream shaper. Base style 3485 & Stacked Tips style 2499. | $632 |
| 7700-0119 | Soft Suction Hose 20ft 5" with 6" long handle female swivel coupler on one end and a 4.5" long handle female swivel coupler on the other end. | $1,619 |
| 7700-0122 | TFT 1" Ultimatic Pistol Grip Nozzle 1. Flow range 10-125gpm. | $925 |
| 7700-0123 | Akron model 1495 ladder pipe with (3) style 489 tips (1-1/8" 1-3/4" 2"). Includes mounting bracket #350 for deluge tips. Ship loose. | $5,825 |
| 7700-0125 | Air Hose (1) one low pressure hose .38 x 50ft. Includes: 1/4" MNPT couplings with Male National Pipe Thread Ends. Locate: Ship loose. | $137 |
| 7700-0126 | Hose PVC Suction Hose 6" x 12' with Action Pyrolite Couplings. | $1,190 |
| 7700-0127 | Akron model 1495 ladder pipe with (3) style 489 tips (1-3/8" 1-1/2" 1-3/4"). Includes mounting bracket #350 for deluge tips. Ship loose. | $5,825 |
| 7800-0000 | Alco-Lite 8' Folding Ladder without shoes. | $318 |
| 7800-0002 | Alco-Lite FL-10 10' folding ladder without shoes. | $266 |
| 7800-0003 | 10' folding Duo-Safety 585-A ladder. | $415 |
| 7800-0004 | Aluminum Cast Bracket for Duo Safety Folding Ladder - For 8' or 10' | $441 |
| 7800-0005 | Alco-Lite CJL-14 Combo Ladder A-Frame/Extension. | $584 |
| 7800-0006 | Alco-Lite PRL-12 roof ladder. | $423 |
| 7800-0007 | Alco-Lite PRL-14' roof ladder. | $451 |
| 7800-0008 | 14' roof ladder Duo-Safety 775-A. | $624 |
| 7800-0009 | Duo-Safety 16' 875-A roof ladder. | $482 |
| 7800-0010 | Alco-Lite PRL-16' roof ladder. | $542 |
| 7800-0011 | Alco-Lite PRL-18 Roof Ladder | $588 |
| 7800-0012 | Alco-Lite TRL-20 Roof Ladder | $859 |
| 7800-0013 | Alco-Lite AEL-12 Attic Extension Ladder | $563 |
| 7800-0014 | Alco-Lite PEL-16 Extension Ladder | $732 |
| 7800-0016 | Alco-Lite PEL-24' 2-section extension ladder. | $922 |
| 7800-0017 | Alco-Lite PEL3-24 extension ladder. | $1,329 |
| 7800-0018 | Extension ladder Duo-Safety 900-A 24' 2-section. | $991 |
| 7800-0019 | Vertical Ladder Bracket | $469 |
| 7800-0020 | Adjustable Track for Ladder Bracket | $247 |
| 7800-0021 | Alco-Lite PEL-28' extension ladder. | $1,197 |
| 7800-0022 | Alco-Lite PEL-30 Extension Ladder | $1,288 |
| 7800-0023 | Alco-Lite PEL3-35' 3-section extension ladder. | $1,628 |
| 7800-0024 | Alco-Lite PEL-35' extension ladder. | $1,486 |
| 7800-0025 | Duo-Safety 1225-A 35' 3-section extension ladder. | $1,650 |
| 7800-0026 | Alco-Lite TEL3-40P Extension Ladder w/Stay Poles | $3,162 |
| 7800-0027 | Little Giant model 17 ladder. | $756 |
| 7800-0028 | Alco-Lite PEL-14 14' 2-Section Extension Ladder. | $708 |
| 7800-0029 | Alco-Lite PEL-20 Extension Ladder. | $856 |
| 7800-0031 | Little Giant Model 22 ladder. | $716 |
| 7800-0032 | Alco-Lite FL-10 10' folding ladder w/safety shoes. | $266 |

| Item No. | Description | |
|---|---|---|
| 7800-0033 | Duo-Safety 20' 2-section extension ladder 900-A. | $1,007 |
| 7800-0038 | Alco-Lite PRL-20' roof ladder. | $636 |
| 7800-0039 | Duo-Safety 1225-A 30' 3 Section Extension Ladder | $1,513 |
| 7800-0040 | Alco-Lite PEL3-28 Extension Ladder | $1,404 |
| 7800-0041 | Duo-Safety 1200-A 28' 2-section extension ladder. | $1,215 |
| 7800-0042 | Alco-Lite FEL-24 2-section fiberglass extension ladder. | $1,613 |
| 7800-0043 | Duo-Safety 12' 775-A roof ladder. | $416 |
| 7800-0044 | Alco-Lite PEL-12 Extension Ladder | $621 |
| 7800-0045 | Duo-Safety 1200-A 35' 2 Section Extension Ladder | $1,527 |
| 7800-0046 | Duo-Safety 300-A 13' combination ladder. | $550 |
| 7800-0047 | Duo-Safety 925-A 26' 3-section extension ladder. | $1,100 |
| 7800-0048 | Alco-Lite CJL-10 Combo Ladder A-Frame/Extension | $471 |
| 7800-0049 | Duo-Safety 1525-A 40' 3 Section Extension Ladder w/stay poles. | $2,580 |
| 7800-0050 | Duo-Safety 525-C 40' 3 Section Extension Truss Ladder without stay poles. | $2,535 |
| 7800-0051 | Duo-Safety 20' 875-A Roof Ladder | $607 |
| 7800-0052 | Duo-Safety 18' 875-A Roof Ladder | $545 |
| 7800-0053 | Alco-Lite AEL-14 Attic Extension Ladder. | $634 |
| 7800-0054 | Alco-Lite TEL-40 extension ladder. | $2,297 |
| 7800-0055 | Alco-Lite PEL3-40 Extension Ladder w/o stay poles. | $2,172 |
| 7800-0056 | Alco-Lite TEL-35 Extension Ladder | $1,975 |
| 7800-0057 | Alco-Lite TEL-28 Extension Ladder | $1,568 |
| 7800-0059 | Alco-Lite TEL-50P Extension Ladder with Staypoles. | $3,180 |
| 7800-0060 | Alco-Lite TEL3-50P Extension Ladder w/Stay Poles | $3,702 |
| 7800-0061 | Alco-Lite PRL-8 Roof Ladder. | $389 |
| 7800-0062 | Alco-Lite PRL-10 Roof Ladder. | $394 |
| 7800-0064 | Duo-Safety 1525-A 40' 3 Section Extension Ladder without stay poles. | $2,108 |
| 7800-0067 | Duo-Safety 10' 775-A Roof Ladder | $376 |
| 7800-0068 | 14' Fresno Duo-Safety ladder model 701 | $718 |
| 7800-0069 | Alco-Lite PEL3-35P Extension Ladder w/Stay Poles. | $1,721 |
| 7800-0070 | Alco-Lite PEL3-30 3 Section Extension Ladder | $1,379 |
| 7800-0071 | Duo-Safety 20' 875-A Roof Ladder with mud guard attached. | $607 |
| 7800-0072 | Duo-Safety 1200-A 28' 2 Section Extension Ladder with mud guard attached. | $1,267 |
| 7800-0073 | Duo-Safety 1200-A 35' 2 Section Extension Ladder with mud guard attached. | $1,578 |
| 7800-0076 | Duo-Safety 1200-A 35' 2 Section Extension Ladder. Special custom length ladder 1" shorter than standard in closed position. | $1,527 |
| 7800-0077 | Duo-Safety 925-A 22' 3 Section Extension Ladder | $1,078 |
| 7800-0078 | Alco-Lite FL-10 10' folding ladder without shoes and handles. | $266 |
| 7800-0079 | Duo-Safety 1200-A 28' 2 Section Extension Ladder special width 22" wide. | $1,355 |
| 7800-0080 | Aluminum Cast Bracket for Alcolite Folding Ladder - For 8' or 10' | $441 |
| 7800-0082 | Alco-Lite FRL-14' roof ladder. | $549 |
| 7800-0083 | Alco-Lite FEL-24' 2-section extension ladder. | $1,200 |
| 7800-0084 | Alco-Lite PEL3-40 Extension Ladder with stay poles. | $2,321 |
| 7800-0085 | 14' roof ladder Duo-Safety 775-DR. Includes folding steel roof hooks on both ends with prong feet. | $659 |
| 7800-0086 | Alco-Lite CJL-12 Combo Ladder A-Frame/Extension. | $534 |
| 7800-0087 | Alco-Lite FEL3-35 3-section fiberglass extension ladder. | $1,776 |
| 7800-0088 | 10' roof ladder Duo-Safety 775-DR. Includes folding steel roof hooks on both ends with prong feet. | $581 |
| 7800-0089 | Duo-Safety 16' roof ladder 875-DR. Includes folding steel roof hooks on both ends with prong feet. | $752 |
| 7800-0090 | Little Giant model 13 ladder. Classic style | $617 |
| 7800-0091 | 8' folding Duo-Safety 585-A ladder. | $313 |
| 7800-0092 | Duo-Safety 1225-A 28' 3-Section Extension Ladder | $1,215 |
| 7800-0095 | Duo-Safety 20' roof ladder 875-DR. Includes folding steel roof hooks on both ends with prong feet. | $870 |
| 7800-0096 | Duo-Safety 775-DR 12' roof ladder. Includes folding steel roof hooks on both ends with prong feet. | $593 |
| 7800-0097 | 10' Fresno Duo-Safety ladder model 701 | $699 |
| 7900-0007 | Chrome Barrel Strainer 2.5" | $283 |
| 7900-0008 | Chrome Barrel Strainer 5". | $354 |
| 7900-0009 | Strainer Bracket 5" | $102 |

| Item No. | Description | |
|---|---|---|
| 7900-0010 | Chrome Barrel Strainer 6" NST. | $354 |
| 7900-0011 | Strainer Bracket 6". | $110 |
| 7900-0012 | Galvanized Strainer Basket 6" | $403 |
| 7900-0014 | DOT Required Drive Away Kit - Kit includes three (3) triangular warning reflectors with carrying case. This kit is for the end user and is to remain with the truck. | $31 |
| 7900-0016 | Ferno Washington Model 71Stokes | $1,116 |
| 7900-0024 | Foam 3% Chem Guard AFFF 5 gallon pail Mil Spec. | $98 |
| 7900-0031 | Handheld flashlight orange Streamlight Litebox flashlight with vehicle mount system. | $170 |
| 7900-0033 | Medical Kit w/BLS | $374 |
| 7900-0035 | Rope .625 x 100' Kern with Bag. | $280 |
| 7900-0036 | Plugs Leak Sealing Kit | $492 |
| 7900-0037 | Blanket Fire Rescue. | $74 |
| 7900-0041 | Ramsey QM9000 9000 lb. portable winch. | $1,700 |
| 7900-0043 | Firecom UH-40 headset. | $456 |
| 7900-0045 | Poly Box 6" high x 8" wide x 22" deep. | $192 |
| 7900-0046 | Goodyear front spare tire assembly with aluminum wheel to match front tire / wheel specification. | $2,094 |
| 7900-0047 | Goodyear rear spare tire assembly with aluminum wheel to match rear tire / wheel specification. | $1,811 |
| 7900-0048 | Michelin front spare tire assembly with aluminum wheel to match front tire / wheel specification. | $1,899 |
| 7900-0049 | Michelin rear spare tire assembly with aluminum wheel to match rear tire / wheel specification. | $1,697 |
| 7900-0051 | Goodyear rear spare tire assembly with steel wheel to match rear tire specification. | $1,225 |
| 7900-0052 | Michelin front spare tire assembly with steel wheel to match front tire specification. | $1,432 |
| 7900-0053 | Michelin rear spare tire assembly with steel wheel to match rear tire specification. | $1,097 |
| 7900-0054 | Handheld Flashlight Orange Streamlight Survivor LED flashlight with holder and AC/DC charger. Ship loose. | $175 |
| 7900-0057 | Intercom System Setcom Orange County Reference Quote in Truck File All Components are to be Shipped Loose for Customer Installation. | $6,316 |
| 7900-0058 | Diagnostic Software Kit for S-60 Engine Allison Transmission and ABS | $7,699 |
| 7900-0061 | Firecom UH-10 headset. | $456 |
| 7900-0062 | Firecom UH-10S headset. | $456 |
| 7900-0063 | Firecom UH-20 headset. | $456 |
| 7900-0066 | Shoreline extension cord 50' of 12/3 black. (1) end 20A male household (1) end 20A female auto eject. | $197 |
| 7900-0067 | Strainer Bracket 2.5" | $102 |
| 7900-0068 | Military ID plate. Info to be supplied at completion of unit. | $135 |
| 7900-0070 | Jack 12 tons. | $111 |
| 7900-0086 | Road safety Kit ARFF. | $420 |
| 7900-0100 | A 9000 lb Warn multi-mount (portable) electric reversible winch with 125' of 5/16'' galvanized aircraft type cable and a replaceable clevis hook shall be installed and shall be controlled with a 12' remote control switch. | $1,857 |
| 7900-0101 | Medical glove box. Shipped loose. Includes slotted top for dispensing gloves without opening hinged lid. Box to be same color as interior of cab. Secure lid in closed position with small butterfly latch. | $262 |
| 7900-0102 | Manual cord reel for 200' of 10/3 wire and a 20amp twist lock connection. | $737 |
| 7900-0103 | 50 foot extension cord with Battery charger recept on one end. | $170 |
| 7900-0104 | Ramsey QM8000 8000 lb portable winch | $1,618 |
| 7900-0106 | Fold down computer tray. | $684 |
| 7900-0107 | Ship spare tire(s) via common carrier to customer location. | $156 |
| 7900-0108 | Quartz light MagnaFire 750W/120V model KR-SB-836-TM-I with external mount tripod telepole. Shipped loose. | $1,279 |
| 7900-0117 | 245 Piece Craftsmen Mechanics toolbox - Sears #00934245000 Mfr # 34245 | $436 |
| 7900-0119 | Jack 12 tons. | $185 |
| 7900-0120 | HeartStart OnSite Automated External Defibrillator. Unmounted. | $2,134 |
| 7900-0133 | Wabco diagnostic software - provided at delivery. | $119 |
| 7900-0135 | Vest traffic safety orange nylon mesh. | $15 |
| 7900-0143 | Monitor Akron 3416 Apollo Single Inlet Portable and Deck Monitor 4" Storz Ground Base and Truck mounting flange only. | $3,794 |

| Item No. | Description | |
|---|---|---|
| 7900-0151 | Shoreline extension cord 50' of 12/3 black. (1) end 20A male household (1) end 20A female auto eject. | $197 |
| 7900-0152 | Cord reel manual with 150' of 12/3 black cable. Shipped loose. | $544 |
| 7900-0154 | Map Box Rectangular Short. | $507 |
| 7900-0155 | Junkin model JSA-300PCW stokes basket. Ship loose. | $798 |
| 7900-0156 | Multiplex adapter kit. Includes 6' harness with 9 pin plug/Deutsch ends and a USB to CAN interface module. | $307 |
| 7900-0157 | Junction box Circle-D with four (4) 3-wire NEMA L5-20 110 volt 20 amp twist lock receptacles. Includes 3' pig tail with 20A TL connector. | $756 |
| 7900-0158 | Junction box Circle-D with (2) 15 amp straight blade and (2) 20 amp twist lock receptacles. Includes 3' pig tail with 20 amp twist lock connector. | $955 |
| 7900-0159 | Junction box Circle-D with (2) 15 amp straight blade and (2) 20 amp twist lock receptacles. Includes 20 amp twist lock inlet connector. | $955 |
| 7900-0166 | Computer Panasonic Toughbook 30. | $5,138 |
| 7900-0167 | Junction box Circle-D with (1) 20 amp straight blade and (3) 20 amp twist lock receptacles. Includes 3' pig tail with 20 amp twist lock connector. | $955 |
| 7900-0169 | 12x18 American Flag for bumper guide (PR). Shipped loose. | $73 |
| 7900-0170 | Zico helmet holder model UHH-1 (EA). Ship loose. | $63 |
| 7900-0171 | Cummins Quick Check 5200 Kit. Ship loose. | $1,873 |
| 7900-0172 | 28" orange traffic cone with (2) reflective stripes. | $58 |
| 7900-0173 | Junction box Woodhead with four (4) NEMA L5-15 110 Volt 15 Amp twist lock receptacles. Includes 12" pig tail with 20A TL connector. | $1,503 |
| 7900-0174 | Map Box with Angle Storage. Finish to match cab interior. Ship loose. | $507 |
| 7900-0175 | Map box suspended with officer's map storage without mounting angles. Finish to match cab interior. Ship loose. | $709 |
| 7900-0178 | Generator Honda 2KW model EU2000iA with 1.6KW continuous output. Shipped loose. | $1,612 |
| 7900-0179 | Akron Apollo (3416) Ground Mount and truck mounting flange Pyrolite stream shaperand stacked tips base to have single 4" FNST inlet. | $3,853 |
| 7900-0180 | Cascade model CT-PSS1 one piece tapered stainless steel Pro Series stokes basket. Ship loose. | $1,296 |
| 7900-0183 | Sign plate smooth 30"x30" shipped loose. Color: Job Color | $244 |
| 7900-0192 | Bracket SCBA Lifeguard SmartDock Gen2 restraint system. Location: Ship Loose. | $506 |
| 7900-0193 | Junction box Circle-D 3-wire 110V with (2) 20 amp straight blade and (2) 30 amp twist lock receptacles. Includes 12" pig tail with 30 amp twist lock connector. | $955 |
| 7900-0195 | E-One standard rubrail 10' length. | $170 |
| 7900-0197 | Map box suspended with drop-down doors. 34"W x 9.50"H x 12"D. Shipped loose. Map box to be Zolatone gray. | $588 |
| 7900-0203 | Junction box Circle-D with (3) NEMA 5-20 120V GFCI duplex and (1) NEMA L6-20 220V twist lock receptacle. Includes 3' pig tail with L14-30P TL connector. Shipped loose. | $955 |
| 7900-0206 | Junction box Akron with (4) 5-15 120v 15 Amp duplex recepts. Includes 12" pigtail with Hubbel L5-20 connector. Ship loose. | $698 |
| 7900-0207 | FireCom wireless headset. One (1) model UHW-51 (intercom ordered separately). | $815 |
| 7900-0208 | FireCom wireless headset. One (1) model UHW-54 (intercom ordered separately). | $815 |
| 7900-0209 | FireCom slotted dome headset. One (1) model UH-51S (intercom ordered separately). | $519 |
| 7900-0210 | FireCom headset. One (1) model UH-51 (intercom ordered separately). | $519 |
| 7900-0211 | FireCom headset. One (1) model UH-52 (intercom ordered separately). | $519 |
| 7900-0212 | FireCom wireless headset. One (1) model UHW-52 (intercom ordered separately). | $815 |
| 7900-0214 | FireCom slotted dome headset for wireless intercom. One (1) model UH-51S and one (1) model BP5-10 plug in belt pack to provide wireless headset functionality (intercom ordered separately). | $1,067 |
| 7900-0215 | FireCom headset. One (1) model UH-54 (intercom ordered separately). | $519 |
| 7900-0217 | Wheel Chocks 32" NFPA Compliant - Pair of Zico AC-32. Up to 32" diameter tires. | $294 |
| 7900-0218 | Wheel chocks 44" NFPA complaint pair (PR) of Zico SAC-44. Up to 44" diameter tires. | $621 |
| 7900-0221 | Junction box Circle-D with four (4) 3-wire 120Volt 20 Amp duplex receptacles with reset breakers. Includes 12" pig tail with L14-20 TL connector. For use with 10/4 240V reel. | $955 |
| 7900-0222 | Diagnostic software for Allison transmission. | $1,169 |
| 7900-0223 | Front and rear wheel trim kit (ship loose). Includes Real Wheels stainless steel "Cover-Up" covers with E-ONE logo for front IFS and rear tandem axle. | $1,158 |
| 7900-0224 | Light Fire Research Spectra LED 110V portable model SPA700-K20-703-ON. Location(s): shipped loose. | $2,549 |
| 7900-0225 | Bostrom SecureAll mechanical air pack bottle bracket (EA) (included in loose equipment). | $525 |

| Item No. | Description | |
|---|---|---|
| 7900-0226 | Junction box Akron with four (4) 3-wire Nema L5-20 110Volt 20 Amp twist lock receptacles. Includes 12" pigtail with L5-20 connector. Ship loose. | $698 |
| 7900-0228 | V-MUX Electrical system diagnostic kit. | $885 |
| 7900-0229 | Zinc Plated Strainer Basket 6" | $254 |
| 7900-0232 | Hosebed divider(s) short. To run above enhanced extended body to the rear of hose bed approximately 17" long x 22.25" high. Divider(s) to be shipped as loose equipment. | $81 |
| 7900-0233 | Setcom headset. One (1) model CSB-900 radio transmit capable (intercom system ordered separately). | $515 |
| 7900-0234 | Setcom headset. One (1) model CSB-901 intercom only (intercom system ordered separately). | $515 |
| 7900-0235 | Setcom wireless headset with base. One (1) model CSB-900W3 radio transmit capable (intercom system ordered separately). | $1,111 |
| 7900-0236 | Setcom wireless headset with base. One (1) model CSB-901W3 intercom only (intercom system ordered separately). | $1,111 |
| 7900-0237 | Junction box with 2' pigtail. Daniel Woodhead with two (2) NEMA L5-20 110V 20A twist lock and two (2) NEMA 5-20 110V 20A duplex receptacles. Includes 2' pigtail wired direct with a male L5-20 plug. Shipped loose. | $1,416 |
| 7900-0240 | Junction box Akron with two (2) 5-20 120v 20 Amp straight blade duplex receptacles and two (2) L5-20 120v 20 Amp twist lock receptacles. Each receptacle shall be equipped with individual 20A breakers a spring-loaded snap cover and marked in white lettering with that receptacles voltage and ampere rating. All electrical receptacles plugs and snap type weatherproof covers shall be UL Listed components. 12" Pigtail that includes wire mesh cord grip with a L14-20 connector. Ship loose. | $698 |
| 7900-0242 | Junction box Circle-D with four (4) 3-wire Nema 5-20 110Volt 20 Amp duplex household receptacles. Includes 3' pig tail with 20A TL connector. | $756 |
| 7900-0243 | Exhaust end chrome plated. Due to high heat from current emission exhaust systems dis-coloring of exhaust end may occur after prolonged use. Ship Loose. | $267 |
| 7900-0245 | Junction box Circle-D with three (3) L5-20 120v 20 Amp twist lock receptacles and one (1) 5-20 120v 20 Amp straight blade duplex receptacle. A Circle-D model PF51G four outlet electrical junction box shall be provided and shall have an integral pilot light to indicate electrical current. Each receptacle shall be equipped with individual 20A breakers. 12" Pigtail with a L14-20 4 wire connector. Ship loose. | $955 |
| 7900-0247 | Speedlay tray loose equipment - removable. Tray includes a 1.25" extruded alum handle low on each end of tray and slots down each side to facilitate lifting. The floor of the tray shall have poly slides and be slotted to prevent the accumulation of water and allow for ventilation of wet hose. | $611 |
| 7900-0248 | Pro-Link hand held diagnostic kit. Cummins engine. | $4,881 |
| 7900-0251 | Foam 6% Chem Guard AFFF 5 gallon pail Mil Spec. | $137 |
| 7900-0253 | Junction box Circle-D with (2) 3-wire NEMA L5-20 110V 20A twist lock receptacles and (2) 3-wire NEMA 5-20 110V 20A household receptacles. Includes 3' pig tail with 20A TL connector. | $756 |
| 7900-0255 | Floodlight Whelen PFP2AC 110V powder coated black with external mount 50" tripod telepole. Requires 110V receptacle shipped loose. | $3,273 |
| 7900-0257 | Soft Suction Hose 15ft 6" with 6" long handle female swivel coupler on one end and a 4.5" long handle female swivel coupler on the other end. | $1,307 |
| 7900-0258 | Spotlight Optronics Blue Eye model KB4003 hand held. Ship loose. | $237 |
| 7900-0259 | Removable aluminum speedlay tray(s)for 1.75" DJ hose. Tray includes a 1.25" extruded alum handle low on each end of tray and slots down each side to facilitate lifting. The floor of the tray shall have poly slides and be slotted to prevent the accumulation of water and allow for ventilation of wet hose. This is in addition to the standard speedlay trays and are to be shipped loose. | $611 |
| 7900-0260 | Junction box Circle-D with (2) 15 amp straight blade and (2) 15 amp twist lock receptacles. Includes 3' pig tail with 20 amp twist lock connector. | $955 |
| 7900-0261 | Shoreline extension cord 50' of 10/3 black. (1) end 30A NEMA 5-30P (1) end 30A NEMA 5-30R. | $328 |
| 7900-0263 | Storz 4" mount bracket to be located and mounted at final inspection. | $125 |
| 7900-0265 | 2100 Gallon Aluminum frame portable folding tank. FDTA 2100 H2 alum w/22 oz. sides and 32 oz. Ship with unit stored in storage tank rack. Color to be yellow. | $1,765 |
| 7900-0266 | Cup holder / tray for engine cover painted to match cab interior. Approx 14" wide x 10" long with tapered front corners and cup holders at each rear corner. For use in Typhoon and CII with severe duty engine cover. Ship loose. | $417 |
| 7900-0273 | Junction box Circle-D with four (4) 3-wire NEMA L5-15 110 volt 15 amp twist lock receptacles. Includes 12" pig tail with 15A TL connector. | $756 |

| Item No. | Description | |
|---|---|---|
| 7900-0274 | Junction box Circle-D with (2) 20 amp straight blade and (2) 20 amp twist lock receptacles. Includes 12" pig tail with 20 amp Daniel Woodhead twist lock connector. | $955 |
| 7900-0277 | Wheel chocks 44" NFPA compliant pair (PR) of Zico AC-44. Up to 44" diameter tires. | $540 |
| 7900-0283 | David Clark battery pack (4). | $326 |
| 7900-0284 | Wheel chocks 46" NFPA compliant Checkers Industrial heavy duty Model #AT3514-AC-Y (PR) color:yellow. Up to 46" diameter tires. Includes aluminum traction cleats and mounting brackets. | $987 |
| 7900-0285 | Junkin model JSA-200 stokes basket. Ship loose. | $974 |
| 7900-0288 | Junction box Circle-D with (4) 3-wire NEMA 5-15 110V 15A household receptacles. Includes 3' pig tail with 20A straight blade connector. | $756 |
| 7900-0290 | Removable Aluminum Speedlay Tray with slotted floor to prevent the accumulation of water and allow for ventilation of wet hose. Includes vertical slotted hand hold cutouts on each end in place of extruded grab handle and no lip on either end to facilitate easy removal of hose. This tray is in addition to the standard and shall be shipped loose with the truck. | $611 |
| 7900-0291 | FireCom model UHW505 under helmet wireless radio transmit headset. | $1,100 |
| 7900-0293 | Sight Level Tube for Water Tank Level. | $65 |
| 7900-0295 | FireCom model UHW503 under helmet wireless intercom only headset. | $1,072 |
| 7900-0298 | Junction box Akron with (2) 5-20 125v 20 Amp duplex recepts and (2) L5-20 125v 20 Amp twist lock recepts. Includes 12" pigtail with Daniel Woodhead L5-20 connector and rubber feet. Shipped loose. | $596 |
| 7900-0299 | TFT Crossfire model XFT-NJ monitor with master stream 1250 nozzle. Include truck mount adapter. | $4,688 |
| 7950-0022 | Front axle wheel trim kit. Includes stainless steel lug nut covers (chrome plated plastic if applicable) and center cap with E-ONE logo. Note: Center cap will have an inspection port IPO a logo if equipped with Stemco oil seals. | $253 |
| 7950-0023 | Rear axle (single) wheel trim kit. Includes stainless steel lug nut covers (chrome plated plastic if applicable) and center cap with E-ONE logo. E-ONE custom chassis w/steel wheels will have chrome plated plastic lug covers. | $312 |
| **PAINTING, STRIPING, LETTERING** | | |
| 8100-0001 | Paint end of fly section high visibility orange. Includes nozzle guard (if equipped). | $475 |
| 8100-0065 | Paint chassis frame rails springs cross-members fire pump drivelines fuel and air tanks axles front bumper extensions with brackets and front suction piping (if applicable) shall be painted: [#COL]. | $1,941 |
| 8100-0070 | Paint valve ends job color. | $494 |
| 8100-0071 | Undercoating E-ONE. | $303 |
| 8100-0072 | Touch up paint (1) pint. Dupont paint job color. | $96 |
| 8100-0084 | All applicable pump/pre-connect application modules are to have a job color finish. Includes upper and lower pump modules crosswalk module and/or speedlay/pre-connect module (as applicable). Rear mounted body/pump module to be painted job color. | $632 |
| 8100-0085 | Paint end of fly section job color. Includes nozzle guard (if equipped). | $475 |
| 8100-0088 | Painted trim stripe on chassis wheels (per axle). Color to be: [#COL]. | $184 |
| 8100-0096 | Paint rear tow eye assemblies job color IPO black. | $287 |
| 8100-0097 | Paint the pump job color. | $604 |
| 8100-0100 | Special paint break. See sketch / drawing / photo in sales file. | $200 |
| 8100-0102 | Chassis axle ends to be painted job color. | $317 |
| 8100-0108 | Front wheels to be painted on the inboard side (same color as outboard side). | $325 |
| 8100-0109 | Rear wheels (4) to be painted on the inboard side (same color as outboard side). Includes outboard side of the inboard wheels. | $649 |
| 8100-0111 | Breating air bottle(s) to be painted metallic color IPOS yellow. Color: L0679EG Metallic blue | $179 |
| 8100-0115 | Paint valve ends 767681EG Black. | $494 |
| 8100-0117 | Paint cab/body with approved metallic paint color. | $2,854 |
| 8100-0165 | Paint lift cylinders extension cylinders and upper turntable steelwork job color (does not apply to TT deck). If cab is two-tone color to match upper cab. | $559 |
| 8100-0169 | Painted stripe - 4" wide hockey stripe straight across front and may contour as it transitions from Cab to Body on each side. Color: [#COL]. Location: [#LOC]. | $4,646 |
| 8100-0170 | Painted Stripe - 6" wide with "Z". Stripe straight on front sides and rear of cab and body. "Z" location to be specified by customer. Color: [#COL]. Location: [#LOC]. | $4,646 |
| 8100-0172 | Paint body two tone color. Paint break will be just above door drip rail. DuPont paint. Color: [#COL]. | $2,003 |
| 8100-0174 | Painted stripe - 12" wide hockey stripe straight across front and may contour as it transitions from Cab to Body on each side. Color: [#COL]. Location: [#LOC]. | $5,807 |

| Item No. | Description | |
|---|---|---|
| 8100-0176 | Paint E-ONE chassis cab - Sikkens paint. Color: [#COL]. | $5,778 |
| 8100-0177 | Paint cab Sikkens two-tone. Upper area of cab to be painted [#COL]. | $1,302 |
| 8100-0181 | Paint body two-tone color - Sikkens paint: Color: [#COL]. | $2,003 |
| 8100-0183 | Paint Body - Large - For Aerials T/A Tankers/Wetsides Rear Mounts and Rescues. Sikkens paint. Color: [#COL]. | $4,404 |
| 8100-0188 | Durabak coating for all cab and body handrails. | $1,479 |
| 8100-0225 | Paint the pump. Color: [#COL]. | $604 |
| 8100-0226 | Medical cabinet exterior roll-up door two-tone paint adjustment (EA). Includes dis-assembly/re-assembly of existing two-tone roll-up door to match cab paint break. | $481 |
| 8100-0230 | Painted stripe - 10" wide hockey stripe straight across front and may contour as it transitions from Cab to Body on each side. Color: [#COL]. Location: [#LOC]. | $5,807 |
| 8100-0232 | Paint aerial monitor / nozzle guard high visibility orange. | $277 |
| 8100-0361 | Rear body surface to have a painted job color finish. Includes hinged doors that do not have discrete sales codes and removable panels. | $899 |
| 8100-0362 | Paint body two tone color. Paint break will be just above the body compartment top. Sikkens paint. Color: [#COL]. | $2,003 |
| 8100-0363 | Breathing air bottle(s) to be painted non-standard color IPOS yellow. Color: [#COL]. | $119 |
| 8100-0372 | Paint cab two-tone with approved metallic flake paint color. | $714 |
| 8100-0373 | Front cab grille mesh painted FLNA4001 white with [#COL] painted letters. Sales to provide detail of letters to provide. | $623 |
| 8100-0375 | LizardSkin under cab insulation. Includes all exterior under cab surfaces exposed to interior crew compartment. | $3,296 |
| 8100-0383 | Paint Newton Dump job color. | $538 |
| 8100-0385 | Outline for painted letter on cab grille (EA) - 18". CIIX cabs only. Color: [#COL]. | $134 |
| 8100-0387 | Chassis frame and component undercoating prior to body load. | $788 |
| 8100-0388 | Chassis fuel tank to have undercoating applied prior to installation on frame. | $212 |
| 8100-0394 | Paint body two-tone color. Paint break will be just above the body compartment opening. Sikkens paint. Color: [#COL]. | $2,003 |
| 8100-0395 | Pinned waterway reel to be painted job color. Note: Since reel is painted as a complete unit it will not be covered under the 10 year paint warranty. | $570 |
| 8100-0398 | Paint swivel chute job color. | $667 |
| 8100-0401 | Paint front and rear axle hubs primary job color. | $1,369 |
| 8100-0403 | Black Durabak coating on fuel tank. | $428 |
| 8100-0407 | Striping shall be painted as laid out and defined by customer. Refer to specific instruction sketches and dimensions within the shop order file. | $8,116 |
| 8100-0410 | Black Durabak coating on pump master drain bracket. | $50 |
| 8100-0412 | Zolatone finish gray in color for the upper pump module on the officer side where the E-ONE logo is mounted. | $193 |
| 8100-0413 | Front cab grille mesh painted FLNA4006 white with [#COL] painted letters. Sales to provide detail of letters to provide. | $623 |
| 8100-0416 | Front cab grille mesh painted with the waving United States flag. | $1,592 |
| 8100-0421 | Paint air conditioning condenser cover. Color: [#COL]. | $815 |
| 8100-0422 | Monitor painted [#COL]. | $427 |
| 8100-0424 | Front cab grille mesh painted with the waving Maryland flag. | $1,592 |
| 8100-0425 | Rear ladder tunnel doors upgraded to be painted rather than sanded. Color shall be: [#COL]. Applicable rear body Chevron package shall not be applied on painted door surfaces. | $184 |
| 8100-0436 | All applicable pump/pre-connect application modules are to have a job color finish. Paint the entire pump module inside and outside before loading onto the chassis. | $1,260 |
| 8100-0439 | Painted crosswalk area to include all smooth plate and flat extruded surfaces exposed to the exterior forward and rearward of the crosswalk area. | $632 |
| 8100-0449 | Rear inboard wheels (2) to be painted on the outboard side (same color as outer wheels). Allowing for wheels to be rotated on the rear axle. | $324 |
| 8100-0457 | Paint body two-tone color - Sikkens paint. Locate at the bottom of roll-up door header. Color: [#COL]. | $2,003 |
| 8100-0458 | Special paint break body two-tone color - Sikkens paint: Color: [#COL]. See sketch / drawing / photo in sales file. | $2,003 |
| 8100-0467 | Paint chassis frame rails springs cross-members fire pump drivelines air tanks axles front bumper extensions with brackets and front suction piping (if applicable) shall be painted: [#COL]. Does not include fuel tank. | $1,941 |
| 8100-0472 | Paint intake valve ends 767681EG Black. (DO NOT PAINT PLUGS & SWIVELS) | $248 |
| 8100-0473 | Front cab grille mesh painted with the waving Canadian flag. | $1,592 |

| Item No. | Description | |
|---|---|---|
| 8100-0474 | Paint end of fly section orange down to folding steps. Includes nozzle guard (if equipped). | $835 |
| 8100-0475 | Cab fenders to be painted Durabak black. | $300 |
| 8100-0476 | Brackets painted Durabak black. Includes rear aerial style brackets rear camera cover. | $180 |
| 8100-0477 | Paint front cab grille upper two tone job color. | $686 |
| 8100-0480 | Upper panels rearward of upper module storage compartment to be aluminum smooth plate painted job color. | $250 |
| 8100-0482 | Paint end of fly section orange. Includes nozzle guard (if equipped). | $475 |
| 8100-0483 | Paint bolt-on tip orange IPOS. Includes nozzle guard (if equipped). Steel aerials only. | $132 |
| 8100-0486 | Pinned waterway reel to be painted to match the "two tone" sale code color. Note: Since reel is painted as a complete unit it will not be covered under the 10 year paint warranty. | $570 |
| 8100-0487 | Paint bolt-on tip job clolor IPOS. Includes nozzle guard (if equipped). Steel aerials only. | $132 |
| 8100-0488 | Paint rear tow eye assemblies yellow IPO black. | $287 |
| 8100-0489 | Monitor shall be painted [#COL]. | $494 |
| 8100-0490 | Paint end of fly section orange down to folding steps. Includes nozzle guard (if equipped). | $835 |
| 8100-0491 | Front cab grille mesh painted FLNA4145 black with [#COL] painted letters. Sales to provide detail of letters to provide. | $623 |
| 8100-0494 | LINE-X for Mansaver safety bars at turntable. Color: Black. Only apply to bar knuckle to remain unpainted. | $125 |
| 8100-0501 | Paint each body compartment lower door opening edge with Scorpion polyurethane coating. Color: Job Color. | $1,433 |
| 8100-0505 | Lifting eye on the Bronto's main boom to be painted safety orange. | $245 |
| 8100-0506 | Paint all plumbing black. Pump valves and piping. | $1,131 |
| 8100-0513 | Paint aerial platform (Sikkens). Includes platform framework above catwalk and all heat shields. Color: [#COL]. | $2,748 |
| 8100-0515 | Paint front tow eye and rear frame mounted tow eye assemblies job color IPO black. | $353 |
| 8100-0517 | Tie off eyes on outriggers to be painted bright orange. | $406 |
| 8100-0518 | Paint all body compartment drip rails (hinged and/or rollup door) job color. | $817 |
| 8100-0520 | Front cab grille mesh painted with the non-waving Maryland flag. | $1,592 |
| 8100-0521 | Paint Commercial OEM step package exposed hardware and hardware used to install trim package flat black. For use with coated trim packages (Line-X or similar) Prep and paint all exposed hardware or unpainted brackets on the trim package as well as the OEM step packaging on commercial chassis. To be painted as a final step after trim package is installed. | $208 |
| 8100-0522 | Paint front tow eye assemblies job color IPO black. | $204 |
| 8100-0523 | Paint rear 3-way receiver assembly job color IPO black. | $485 |
| 8100-0525 | Paint air tanks the following colors; Wet tank: Yellow Primary: Orange Secondary: Green Auxiliary: Black. | $469 |
| 8100-0526 | Paint front and rear axle hubs upper two-tone job color. | $1,369 |
| 8100-0527 | Front cab grille mesh painted with the non-waving United States flag. | $1,592 |
| 8100-0532 | Pinned waterway reel to be painted FLNA4145 Black. Note: Since reel is painted as a complete unit it will not be covered under the 10 year paint warranty. | $570 |
| 8100-0533 | Paint all roll up door header plate(s) screws job color. | $198 |
| 8100-0535 | Front cab grille mesh painted FLNA3626 Red with [#COL] painted letters. Sales to provide detail of letters to provide. | $623 |
| 8100-0538 | Paint break painted on chassis stripe - 1/2" Wide - [#COL].To be located 1" above existing paint break if so equipped or at the same approximate position (when there is not a paint break). | $1,412 |
| 8100-0539 | Paint break painted on body stripe - 1/2" Wide - [#COL].To be located 1" above existing paint break if so equipped or at the same approximate position (when there is not a paint break). | $1,886 |
| 8100-0544 | Paint pump anode(s)exterior side as located in fire pump yellow for easy location identification during inspections. | $94 |
| 8100-0545 | Front cab grille mesh painted FLNA4040 white with [#COL] painted letters. Sales to provide detail of letters to provide. | $623 |
| 8100-0546 | Pinned waterway reel to be painted FLNA91733 Silver. Note: Since reel is painted as a complete unit it will not be covered under the 10 year paint warranty. | $570 |
| 8100-0547 | Paint bottom (2) rungs of base section orange. | $232 |
| 8100-0549 | Paint air tanks the following colors; Wet tank: Black Primary: Green Secondary: Blue and Aux.: Yellow. | $469 |
| 8100-0551 | Grille mesh painted. The cab front grille mesh shall be painted. See sketch / drawing / photo in sales file. | $1,592 |

| Item No. | Description | |
|---|---|---|
| 8100-0555 | Paint break painted on chassis stripe - 1/8" Wide - [#COL].To be located 1/4" below existing paint break chassis stripe if so equipped or at the same approximate position (when there is not a paint break). | $1,412 |
| 8150-0023 | Interior cab handrails/window bars painted safety yellow. | $236 |
| 8150-0025 | LINE-X package for Cab Interior see specification for details. Cab door panels steps and step wells are not included in this package. | $1,068 |
| 8150-0028 | The interior of the cab to be have black Scorpion polyurethane coating. | $505 |
| 8150-0031 | The cab interior shall have gray finish. Note: Gray Line-X finish is prone to fading and might change color over time. | $839 |
| 8150-0032 | The body compartment interior (and mounted components if applicable package is selected) shall have gray finish. Note: Gray Line-X finish is prone to fading and might change color over time. | $839 |
| 8150-0033 | LINE-X package for Deluxe Cab Interior see specification for details. Steps and step wells are not included in this package. | $2,074 |
| 8200-0000 | Scotchlite Letter (Each) - 3". Color [#COL]. | $11 |
| 8200-0001 | Scotchlite Letter (Each) - 6". Color [#COL]. | $12 |
| 8200-0002 | Scotchlite Letter (Each) - 9". Color [#COL]. | $13 |
| 8200-0003 | Scotchlite Letter (Each) - 12". Color [#COL]. | $13 |
| 8200-0004 | Scotchlite Letter (Each) - 15". Color [#COL]. | $15 |
| 8200-0005 | Scotchlite Letter (Each) - 18". Color [#COL]. | $17 |
| 8200-0006 | Maltese cross 12" (Pair). | $1,167 |
| 8200-0007 | Sign Gold Letter (Each) - 3". | $14 |
| 8200-0008 | Sign Gold Letter (Each) - 6" | $20 |
| 8200-0009 | Sign Gold Letter (Each) - 9" | $31 |
| 8200-0010 | Sign Gold Letter (Each) - 12" | $31 |
| 8200-0011 | Scotchlite Letters (60) - 3". Color [#COL]. | $787 |
| 8200-0012 | Sign Gold Letters (60) - 3". | $1,144 |
| 8200-0013 | Shade for lettering. | $6 |
| 8200-0014 | Sign "Stay Back 500FT" with black reflective lettering. Locate below rear of body. | $139 |
| 8200-0015 | White reflective tape on (2) outriggers. | $228 |
| 8200-0016 | White reflective tape on (4) outriggers. | $440 |
| 8200-0018 | Scotchlite Letters (90) - 3". Color [#COL]. | $982 |
| 8200-0019 | Scotchlite Letters (120) - 3". Color [#COL]. | $1,176 |
| 8200-0020 | Sign Gold Letters (90) - 3". | $1,523 |
| 8200-0021 | Sign Gold Letters (120) - 3". | $1,897 |
| 8200-0022 | Shade and outline for lettering. | $7 |
| 8200-0024 | Reflexite Letter (Each) - 18". [#COL] Reflexite letter(s) stitched to vinyl hosebed cover end flap. | $69 |
| 8200-0026 | Die cut letter in stripe (EA). | $26 |
| 8200-0027 | Scotchlite Letter (Each) - 5". Color [#COL]. | $12 |
| 8200-0028 | Sign Gold Letter (Each) - 5" | $20 |
| 8200-0029 | Scotchlite Letter (Each) - 10". Color [#COL]. | $14 |
| 8200-0030 | Sign Gold Letter (Each) - 10" | $31 |
| 8200-0031 | Scotchlite Letter (Each) - 30". Color [#COL]. | $21 |
| 8200-0032 | Scotchlite letter each 24" [#COL]. | $19 |
| 8200-0033 | Scotchlite letter (each) - 8". Color [#COL]. | $14 |
| 8200-0036 | Scotchlite Letter (Each) - 4". Color [#COL]. | $12 |
| 8200-0038 | Reflexite Letter (Each) - 12". [#COL] Reflexite letter(s) stitched to vinyl hose bed cover end flap. | $55 |
| 8200-0039 | Maltese Cross SignGold up to 18'' dia (PR) with new layout. | $1,052 |
| 8200-0040 | Gold leaf letters (90) - 3". | $3,799 |
| 8200-0041 | O.W.L. lettering and striping tower package. See photos on file for custom package details. | $9,405 |
| 8200-0045 | Gold leaf letters (120) - 3". | $4,421 |
| 8200-0046 | Scotchlite Letter (Each) - 27". Color [#COL]. | $20 |
| 8200-0047 | Sign Gold Letter (Each) - 4" | $16 |
| 8200-0048 | Sign Gold Letters (120) - 4". | $2,333 |
| 8200-0052 | Sign Gold Letter (Each) - 8" | $31 |
| 8200-0061 | Scotchlite Letter (Each) - 2". Color [#COL]. | $9 |
| 8200-0068 | Painted letter on cab grille (EA) - 18". Color: [#COL]. | $134 |
| 8200-0070 | Scotchlite Letter (Each) - 1.25". Color Black. To read: VIST OUR WEB SITE AT: WWW.PALMHARBORFD.COM | $8 |
| 8200-0073 | Sign Gold Letter (Each) - 3". Sign Gold to be small turn style. | $17 |

| Item No. | Description | |
|---|---|---|
| 8200-0074 | Maltese Cross SignGold up to 15" dia (PR) with new layout. | $847 |
| 8200-0075 | Reflexite Letter (Each) - 10". [#COL] Reflexite letter(s) stitched to vinyl hose bed cover end flap. | $50 |
| 8200-0076 | Sign Gold 2" Lettering IPO standard on breathing air bottle that's mounted to side of aerial base section. | $314 |
| 8200-0081 | Etched Vinyl Letter (Each) - 5" | $20 |
| 8200-0084 | Scotchlite Letter (Each) - 1". Color [#COL]. | $9 |
| 8200-0086 | Sign Gold Letter (Each) - 16". | $37 |
| 8200-0087 | Sign Gold 2" Lettering with a red outline IPO standard on breathing air bottle that's mounted to side of aerial base section. | $314 |
| 8200-0088 | Gold leaf letter (Each) - 4". | $71 |
| 8200-0089 | Gold leaf letters (EA) - 3". | $44 |
| 8200-0090 | Sign Silver Letter (Each) - 3" | $14 |
| 8200-0091 | Sign Silver Letter (Each) - 12" | $31 |
| 8200-0098 | Scotchlite letter each 20" [#COL]. | $18 |
| 8200-0100 | Sign Gold Letter (Each) - 2". | $14 |
| 8200-0107 | Sign Silver Letter (Each) - 6" | $20 |
| 8200-0108 | Install customer supplied lettering. Location: Front cab door. | $91 |
| 8300-0002 | NFPA Scotchlite Stripe - 4" wide and straight on front/sides of cab and sides/rear of body. Color: [#COL]. Location: [#LOC]. | $752 |
| 8300-0003 | NFPA Scotchlite Stripe - 6" wide and straight on front/sides of cab and sides/rear of body. Color: [#COL]. Location: [#LOC]. | $760 |
| 8300-0006 | NFPA Scotchlite Stripe - 6" wide with "Z". Stripe straight on front sides and rear of cab and body. "Z" location to be specified by customer. Color: [#COL]. Location: [#LOC]. | $1,202 |
| 8300-0008 | NFPA Scotchlite Stripe - 5" wide with "S". Stripe straight on front sides and rear of cab and body. "S" location to be specified by customer. Color: [#COL]. Location: [#LOC]. | $1,341 |
| 8300-0009 | NFPA Scotchlite Stripe - 5" wide with double "S". Stripe straight on front sides and rear of cab and body. Double "S" locations to be specified by customer. Color: [#COL]. Location: [#LOC]. | $1,641 |
| 8300-0010 | Reflective red/white striping each side of boom knuckle RLP/HDT. | $156 |
| 8300-0011 | Scotchlite stripe (PR) 1/2" located 1/2" above and below existing stripe. Color: [#COL]. | $560 |
| 8300-0012 | Scotchlite stripes (4) 1/2" located (2) above and (2) below existing stripe. Stripes to be spaced 1/2" apart. Color: [#COL]. | $1,112 |
| 8300-0013 | NFPA Scotchlite Stripe - 2" and 4" wide with "Z". Stripe straight on front sides and rear of cab and body. "Z" location to be specified by customer. 2" above 4" with 1" gap between stripes. Color: [#COL]. Location: [#LOC]. | $1,697 |
| 8300-0016 | Paint Break Sign Gold Chassis Stripe - 3/4" Wide - Black Gold Black. To be located above existing paint break. | $263 |
| 8300-0018 | Sign gold scroll for body door with shade (Ea). Location: [#LOC] | $185 |
| 8300-0019 | Sign gold scroll for body door (Ea). Location: [#LOC] | $60 |
| 8300-0024 | Red/White rubrail scotchlite insert. | $218 |
| 8300-0025 | 1/4" Pin stripe above and below existing Scotchlite stripe. Color: [#COL]. | $897 |
| 8300-0026 | Scotchlite stripe 1" located 1" above and below existing stripe. Color: [#COL]. | $671 |
| 8300-0027 | NFPA Scotchlite 4" wide hockey stripe straight across front and may contour as it transitions from cab to body on each side. Color: [#COL]. Location: [#LOC]. | $903 |
| 8300-0028 | NFPA Scotchlite 6" wide hockey stripe straight across front and may contour as it transitions from Cab to Body on each side. Color: [#COL]. Location: [#LOC]. | $912 |
| 8300-0029 | NFPA Scotchlite 8" wide hockey stripe straight across front and may contour as it transitions from Cab to Body on each side. Color: [#COL]. Location: [#LOC]. | $1,092 |
| 8300-0030 | NFPA Scotchlite 10" wide hockey stripe straight across front and may contour as it transitions from Cab to Body on each side. Color: [#COL]. Location: [#LOC]. | $1,218 |
| 8300-0032 | Chevron "A" style 4" Scotchlite striping on rear of body. Includes rear facing extrusions panels and doors inboard/outboard of the beavertails(if applicable). Colors to be [#COL]. | $3,548 |
| 8300-0033 | NFPA Scotchlite Stripe - 8" wide and straight on front/sides of cab and sides/rear of body. Color: [#COL]. Location: [#LOC]. | $939 |
| 8300-0034 | Scotchlite stripe 2" located 1" above existing stripe. Color: [#COL]. | $425 |
| 8300-0036 | NFPA Scotchlite Stripe - 8" wide with "S". Stripe straight on front sides and rear of cab and body. "S" location to be specified by customer. Color: [#COL]. Location: [#LOC]. | $1,525 |
| 8300-0037 | Chevron "V" style 4" Scotchlite striping on rear of body. Includes rear facing extrusions panels and doors inboard/outboard of the beavertails(if applicable). Colors to be [#COL]. | $3,548 |
| 8300-0038 | Scotchlite stripe 2" located 1" above and below existing stripe. Color: [#COL]. | $849 |
| 8300-0039 | Scotchlite stripe 1" located .5" above and below existing stripe. Color: [#COL]. | $708 |

| Item No. | Description | |
|---|---|---|
| 8300-0043 | NFPA Scotchlite double 2" wide hockey with 1" between stripes straight across front and may contour as it transitions from Cab to Body on each side. Color: [#COL]. Location: [#LOC]. | $2,437 |
| 8300-0044 | Scotchlite stripe 1" located 1" above existing stripe. Color: [#COL]. | $354 |
| 8300-0045 | 1/4" pinstripe. Color: [#COL]. Location: At cab paint break | $197 |
| 8300-0046 | Scotchlite stripe (PR) 1/2" located directly above and below existing stripe. Color: [#COL]. | $704 |
| 8300-0048 | Paint break Scotchlite chassis stripe - 3/4" Wide - Black [#COL] Black. To be located above existing paint break. | $158 |
| 8300-0050 | Scotchlite stripe (PR) 1" located directly above and below existing stripe on satin roll-up doors only. Color: [#COL]. | $560 |
| 8300-0052 | Chevron "V" style Scotchlite striping on rear of body outboard of beavertails (if equipped). Colors to be [#COL]. | $1,052 |
| 8300-0053 | Signgold body scroll package. (1) front lower corner L2 and (1) rear lower corner L5 with connecting 3/4" signgold stripe. (4) R1 (each corner) with connecting 3/4" signgold stripe. (1) R2 lower front corner and (1) R5 lower rear corner with connecting 3/4" signgold stripe. | $1,596 |
| 8300-0054 | [#COL] 3/4" razor blade stripe for sign plates | $579 |
| 8300-0056 | Chevron "A" style 4" individual Scotchlite striping on front bumper. Colors to be [#COL]. | $1,466 |
| 8300-0057 | Arched stripe 6"/2" on front cab door and blend into a straight body stripe. Includes stripe on front bumper. Color: [#COL] | $2,437 |
| 8300-0058 | Chevron "V" style 4" Scotchlite striping on rear B1 compt door (3) stripes. Colors to be red/white/black pinstripe. | $920 |
| 8300-0059 | NFPA Scotchlite Stripe - 10" wide and straight on front sides and rear of cab and body. Color: [#COL]. Location: [#LOC]. | $1,237 |
| 8300-0060 | Scotchlite Stripe - 5" wide straight on front front of cab below windshield end at radius corners. Color: [#COL]. | $251 |
| 8300-0061 | Chevron "A" style 6" individual Scotchlite striping full width on rear of body. Includes rear facing extrusions panels and doors. Colors to be [#COL]. | $1,872 |
| 8300-0062 | Chevron "A" style Scotchlite striping on rear of body outboard of beavertails (if equipped). Colors to be [#COL]. | $1,052 |
| 8300-0065 | Paint break scotchlite chassis stripe - 3/4" Wide - White [#COL] White. To be located above existing paint break. | $684 |
| 8300-0066 | NFPA Scotchlite Stripe - 4" wide with "Z". Stripe straight on front sides and rear of cab and body. "Z" location to be specified by customer. Color: [#COL]. Location: [#LOC]. | $1,192 |
| 8300-0067 | Chevron "A" style 4" Scotchlite striping on rear of body outside of beavertails. Colors to be [#COL]. | $1,466 |
| 8300-0069 | 6" [#COL] scotchlite stripe around perimeter of plaform. Includes 1/2" black trim on top and bottom of stripe. | $522 |
| 8300-0070 | Chevron "A" style 4" Scotchlite striping on rear of body between beavertails. Colors to be [#COL]. | $2,020 |
| 8300-0072 | NFPA Scotchlite Stripe - 10" wide with "Z". Stripe straight on front sides and rear of cab and body. "Z" location to be specified by customer. Color: [#COL]. Location: [#LOC]. | $2,052 |
| 8300-0076 | Chevron "A" style 4" Scotchlite striping on rear of body between beavertails; body panels and extrusions only (No doors). Colors to be [#COL]. | $1,130 |
| 8300-0078 | Chevron "A" style 4" 3M "Diamond Grade" striping on rear of body. Includes rear facing extrusions panels and doors inboard/outboard of the beavertails(if applicable). Colors to be [#COL]. | $4,435 |
| 8300-0079 | Chevron "A" style 4" 3M "Diamond Grade" striping on rear pump panel/bleeder panel(s). Colors to be [#COL]. | $741 |
| 8300-0080 | Chevron "A" style 4" 3M "Diamond Grade" striping on front bumper. Colors to be [#COL]. | $1,833 |
| 8300-0081 | Chevron "A" style 3M "Diamond Grade" striping on rear of body outboard of beavertails (if equipped). Colors to be [#COL]. | $1,316 |
| 8300-0082 | [#COL] Scotchlite on nozzle guard. | $376 |
| 8300-0083 | [#COL] Scotchlite on end of fly section | $582 |
| 8300-0084 | Chevron "A" style 6" printed sheet Scotchlite striping full width on rear of body. Includes rear facing extrusions panels and doors. Colors to be [#COL]. | $1,461 |
| 8300-0085 | Scotchlite stripe 1" located directly above and below existing stripe. Color: [#COL]. | $671 |
| 8300-0086 | Scotchlite 6" wide cab hockey stripe. Hockey located on front cab doors up to top of cab. Color: White. | $547 |
| 8300-0088 | NFPA Scotchlite Stripe - 4" wide and straight on sides and rear of body only. Color: [#COL]. Location: [#LOC]. | $828 |
| 8300-0090 | Scotchlite stripe 1.5" located directly above and below existing stripe. Color: [#COL]. | $710 |
| 8300-0091 | 1/4" Scotchlite pinstripe above and below existing stripe. Color: [#COL]. | $1,023 |

| Item No. | Description | |
|---|---|---|
| 8300-0092 | NFPA Scotchlite custom double hockey stripe. Includes white 6" stripe with 10" angle (hockey) stripes and gold accent stripes on white stripe with black outline. Top of stripe even with bottom of quad bezel hockey on rear of front cab doors and hockey on L2/R2. See additional photos on file with sales. | $4,298 |
| 8300-0093 | Chevron "A" style 6" printed sheet Scotchlite striping on front bumper. Colors to be [#COL]. | $603 |
| 8300-0094 | Chevron "A" style 4" Scotchlite striping on rear body panels only no extrusions. Colors to be [#COL]. | $2,662 |
| 8300-0096 | Reflective tape on two outriggers. Individual striping to alternate in an "A" pattern when viewed from the front or rear of the truck. Colors to be: [#COL]. | $620 |
| 8300-0097 | NFPA Scotchlite custom hockey stripe. Include 6" red stripe centered at front headlights with 2" white stripe below (no gap) additional 2" red below (no gap); hockey up on L3/R3 compt doors. Additional 2" red stripe 2" above bottom of cab doors and straight back. See photos on file with sales. | $4,144 |
| 8300-0099 | Chevron "A" style 6" printed sheet Scotchlite striping on rear of body between beavertails. Colors to be [#COL]. | $1,149 |
| 8300-0100 | Chevron "V" style 4" Scotchlite striping on rear ladder tunnel door(s) only. Colors to be [#COL]. | $911 |
| 8300-0104 | Chevron "V" style 3" Scotchlite striping on rear of body. Colors to be Red/White/Blue. | $3,548 |
| 8300-0109 | Chevron "A" style 6" 3M "Diamond Grade" striping on rear of body. Includes rear facing extrusions panels and doors inboard/outboard of the beavertails(if applicable). Colors to be [#COL]. | $4,435 |
| 8300-0111 | Chevron "A" style 6" individual Scotchlite striping on rear of body except for the pump/ladder tunnel access door. Colors to be [#COL]. | $3,548 |
| 8300-0112 | Chevron "A" style 6" Scotchlite striping on rear facing side of the slide out room. Colors to be [#COL]. | $1,777 |
| 8300-0119 | Yellow reflective tape on 2 outriggers. | $226 |
| 8300-0120 | Chevron "A" style 6" 3M "Diamond Grade" striping on front bumper. Colors to be [#COL]. | $1,833 |
| 8300-0121 | Blue reflective tape on 2 outriggers. | $226 |
| 8300-0122 | Signgold body scroll package. (1) each upper corner L1 L2 L3 L6 L7 R1 R2 R3 R6 R7 and (1) each upper corner L4 L5 R4 R5 with connecting 3/4" signgold stripe. See photos on file with sales. | $5,998 |
| 8300-0123 | Chevron "A" style 6" printed pattern NFPA Scotchlite striping. Provided to driver and officer rear compartment face smooth plate panels and/or doors outboard and above the center rear compartment opening and the vertical hosebed extrusions (terminate just above the upper hand rail stanchion). The vertical and horizontal extrusions inboard of the vertical hose bed extrusions shall remain visible with a sanded finish. Colors to be [#COL]. | $575 |
| 8300-0125 | Reflective [#COL] striping positioned in the "A" formation located in the lower door panel (EA). Location: [#LOC]. | $74 |
| 8300-0137 | Special trim stripe package (Quebec). Includes 1.75" dark blue (Avery A9595-0) non-reflective vinyl located above existing stripe and 1.75" yellow reflective stripe below existing stripe. No space between trim stripes and existing white reflective stripe. | $767 |
| 8300-0138 | Reflective tape on four outriggers. Striping to alternate in an "A" pattern when viewed from the front or rear of the truck. Colors to be: [#COL]. | $1,225 |
| 8300-0142 | Chevron "A" style 6" individual Scotchlite striping on front bumper. Colors to be [#COL]. | $753 |
| 8300-0143 | NFPA Scotchlite Stripe - three stripes 3" wide with "Z" with 1" gap between stripes. Stripe straight on front sides and rear of cab and body. "Z" location to be specified by customer. Color: top stripe - Yellow middle stripe - White bottom stripe - Black. Location: top of bottom stripe flush with top of bumper and straight back. | $3,178 |
| 8300-0144 | Chevron "A" style 6" 3M "Diamond Grade" striping full width on rear of body (does not include the B1 door). Includes rear facing extrusions panels and doors. Colors to be [#COL]. | $1,865 |
| 8300-0145 | Chevron "A" style 6" 3M "Diamond Grade" striping on front bumper. Colors to be [#COL]. | $892 |
| 8300-0146 | Chevron "A" style 6" 3M "Diamond Grade" striping full width on rear of body. Includes rear facing extrusions panels and doors. Colors to be [#COL]. | $2,460 |
| 8300-0148 | Sign gold scroll (4 ea side) for body with connecting .75" sign gold body stripe and white painted pin stripe. | $3,126 |
| 8300-0150 | Chevron "A" style 6" printed sheet Scotchlite striping on rear of body. Includes rear facing extrusions panels and doors inboard/outboard of the beavertails (if applicable). Colors to be [#COL]. | $1,271 |
| 8300-0155 | NFPA Scotchlite Stripe - 4" wide with ribbon style "Z". Stripe straight on front sides and rear of cab and body. "Z" location to be specified by customer. Color: [#COL]. Location: [#LOC]. | $1,202 |
| 8300-0156 | Sign gold scroll (20) for body doors with connecting .5" sign gold stripe. | $1,404 |
| 8300-0159 | Red/Yellow scotchlite. Locate on front of roll-out tray(s) front lip of adjustable/fixed shelves and tool board(s) on outer vertical edge on both sides. | $438 |

| Item No. | Description | |
|---|---|---|
| 8300-0161 | NFPA Scotchlite stripe. Pasco County double half "S" stripe with 1" black 1/2" white 4" red 1/2" white. See photos on file with sales. | $2,199 |
| 8300-0162 | Scotchlite stripe 1" located 1" below existing stripe. Color: [#COL]. | $354 |
| 8300-0166 | Diamond Grade reflective tape on (4) outriggers. Striping to alternate in an "A" pattern when viewed from the front or rear of the truck. Colors to be: [#COL]. | $910 |
| 8300-0170 | Border 1.5" black vinyl for rear facing lower level warning lights. | $58 |
| 8300-0179 | Chevron "A" style 6" printed sheet Scotchlite striping on rear of body. Includes rear facing extrusions panels inboard/outboard of the beavertails (if applicable). Does not include the rear door(s). Colors to be Yellow/Red. | $1,207 |
| 8300-0180 | Sign gold scroll (4 ea side) for body with connecting .75" sign gold body stripe and white scotchlite pin stripe. | $2,097 |
| 8300-0181 | Paint Break Sign Gold Chassis Stripe - 3/4" Wide - Black Gold Black. Sign Gold to be small turn style. To be located above existing paint break. | $527 |
| 8300-0184 | Special rear flag style chevron striping on rear of apparatus. Includes triangular area of blue Scotchlite (with white reflective stars) at top center with individual 6" red and white Scotchlite stripes at a 45 degree angle on remaining area (sloping down from left to right). Ref photo of SO 134676. | $2,050 |
| 8300-0186 | NFPA Scotchlite Stripe - 2" and 6" wide with "Z". Stripe straight on front sides and rear of cab and body. "Z" location to be specified by customer. 2" above 6" with 1" gap between stripes. 6" stripe to have a .25" outline above and below. Color: [#COL]. Location: [#LOC]. | $1,697 |
| 8300-0189 | Scotchlite striping on front bumper 6". Color to be [#COL]. | $753 |
| 8300-0190 | Chevron "A" style 6" 3M "Diamond Grade" striping on rear of body (does not include the B1 door). Includes rear facing extrusions panels and doors inboard/outboard of the beavertails(if applicable). Colors to be [#COL]. | $1,865 |
| 8300-0191 | Paint break Scotchlite chassis stripe - 1/4" Wide - [#COL]. To be located above existing paint break. | $489 |
| 8300-0192 | NFPA Scotchlite Stripe - 8" and 3" wide with "Z". Stripe straight on front sides and rear of cab and body. "Z" location to be specified by customer. 8" above 3" with 1.5" gap between stripes. Color: White. Location: Center of the 8" stripe centered with Quad bezel (in between upper and lower bezel) and straight back. | $2,230 |
| 8300-0193 | Chevron "A" style 3M "Diamond Grade" Dots in 6" striping pattern on rear of body (does not include the B1 door). Includes rear facing extrusions panels and doors inboard of the beavertails (if applicable). Colors to be [#COL]. | $2,779 |
| 8300-0194 | Install dealer supplied Scotchlite pinstripe above and below existing stripe. Color: Blue. | $549 |
| 8300-0197 | Scotchlite stripe 1" located 1" down from top of stripe and 1" up from bottom of stripe (1"stripes on existing stripe). Color: [#COL]. | $708 |
| 8300-0198 | NFPA Scotchlite Stripe - 8" wide with "Z". Stripe straight on front sides and rear of cab and body. "Z" location to be specified by customer. Color: [#COL]. Location: [#LOC]. | $2,230 |
| 8300-0200 | Scotchlite stripe 2" located 2" below existing stripe. Color: [#COL]. | $837 |
| 8300-0204 | Chevron "A" style 6" 3M "Diamond Grade" striping on (4) outriggers. Colors to be [#COL]. | $1,237 |
| 8300-0205 | NFPA Scotchlite Stripe - 4" wide with double ribbon. Double ribbon locations to be specified by customer. Color: [#COL]. Location: [#LOC]. | $1,641 |
| 8300-0207 | Chevron "A" style printed sheet 6" striping for sign plate at rear turntable handrails. Colors to be [#COL]. | $306 |
| 8300-0208 | Chevron "A" style 6" Scotchlite striping on bottom of platform oriented with base of chevron to hinged side. Colors to be Red/Yellow. | $900 |
| 8300-0209 | NFPA Scotchlite Stripe - 10" wide with pin striping above and below. Pin striping thickness and spacing shall be as specified in shop order and straight on front sides and rear of cab and body. Color: [#COL]. Location: [#LOC]. | $1,562 |
| 8300-0210 | Reflective tape. There will be reflective tape added to the front and both sides of all roll-out trays to aid in visibility. Tape will be [#COL] in color. | $1,117 |
| 8300-0214 | Chevron "A" style 6" printed sheet Scotchlite striping stitched to vinyl hosebed cover end flap. Colors to be [#COL]. | $452 |
| 8300-0215 | Gold reflective tape on 2 outriggers. | $226 |
| 8300-0216 | Scotchlite 3" wide hockey stripe straight across front and may contour as it transitions from cab to body on each side. Color: [#COL]. Location: [#LOC]. | $903 |
| 8300-0217 | NFPA Scotchlite Stripe - 1" and 6" wide with "Z". Stripe straight on front sides and rear of cab and body. "Z" location to be specified by customer. 1" above 6" with 1" gap between stripes. 6" stripe to have a .25" outline above and below. Color: [#COL]. Location: [#LOC]. | $1,697 |

| Item No. | Description | |
|---|---|---|
| 8300-0220 | Paint Break Sign Gold Chassis Stripe - 1" Wide - Black pin stripe Sign Gold Black pin stripe. To be located above existing paint break if so equipped or at the same approximate position (when there is not a paint break). | $704 |
| 8300-0221 | Sign gold scroll (Ea). Scroll detail/definition shall be defined by sales administration and or shop order file. Location: [#LOC] | $60 |
| 8300-0222 | NFPA Scotchlite Stripe - 1" 4" and 1" wide with "Z". Stripe straight on front sides and rear of cab and body. "Z" location to be specified by customer. 1" above and below 4" with 1" gap between stripes. Color: [#COL]. Location: [#LOC]. | $1,697 |
| 8300-0223 | NFPA Scotchlite Stripe - 6" wide with double pin stripe top and bottom. "Z" Stripe straight on front sides and rear of cab and body. "Z" location to be specified by customer. Stripe shall be a printed sheet laid out from top to bottom as 1/4" pin stripe 1/8" gap (wide stripe color) 1/8" pin stripe 6" wide stripe 1/8" pin stripe 1/8" gap (wide stripe color) 1/4" pin stripe. Color: [#COL]. Location: [#LOC]. | $1,697 |
| 8300-0224 | Paint break Scotchlite chassis stripe - 1/2" Wide - [#COL]. To be located above existing paint break. | $560 |
| 8300-0225 | Paint break Scotchlite body stripe - 1/2" Wide - [#COL]. To be located above existing paint break. | $797 |
| 8300-0226 | Sign Gold Stripe - 3/4" Wide aerial sign plate - Gold with red pin stripe outline. The striping shall create a border around sign plate lettering. | $1,183 |
| 8300-0227 | Diamond Grade reflective tape on (2) outriggers. Striping to alternate in an "A" pattern when viewed from the front or rear of the truck. Colors to be: [#COL]. | $723 |
| 8300-0228 | Printed reflective striping on (2) outriggers. Striping to alternate in an "A" pattern when viewed from the front or rear of the truck. Colors to be: [#COL]. | $322 |
| 8300-0229 | Scotchlite stripe 3" located 2" below existing stripe. Color: [#COL]. | $884 |
| 8300-0230 | Paint break painted on chassis stripe - 1/8" Wide - [#COL].To be located above existing paint break if so equipped or at the same approximate position (when there is not a paint break). | $1,191 |
| 8300-0232 | NFPA Scotchlite Stripe - 2" and 4" wide with interlocking "Z". Stripe straight on front sides and rear of cab and body. "Z" location to be specified by customer. 2" above 4" with 1" gap between stripes. Color: [#COL]. Location: [#LOC]. | $1,697 |
| 8300-0233 | NFPA Scotchlite Stripe - 1" 4" and 1" wide with triple interlocking "Z". Stripe straight on front sides and rear of cab and body. "Z" location to be specified by customer. 1" above and below 4" with 1" gap between stripes. Color: [#COL]. Location: [#LOC]. | $2,483 |
| 8300-0234 | NFPA Scotchlite Stripe - 2" wide with "Heartbeat". Stripe straight on front sides and rear of cab and body. "heartbeat" location to be specified by customer. Color: [#COL]. Location: [#LOC]. | $1,192 |
| 8300-0237 | Individual reflective tape on (4) outriggers. Striping to alternate in an "A" pattern when viewed from the front or rear of the truck. Colors to be: [#COL]. | $828 |
| 8300-0238 | Printed reflective striping on (4) outriggers. Striping to alternate in an "A" pattern when viewed from the front or rear of the truck. Colors to be: [#COL]. | $389 |
| 8300-0239 | Individual reflective tape on (2) outriggers. Striping to alternate in an "A" pattern when viewed from the front or rear of the truck. Colors to be: [#COL]. | $621 |
| 8300-0240 | Installation of a customer supplied stripe 16" in width shall be installed. The 16" stripe material shall be supplied by the customer Spectra Red in color and shall be reviewed by the Graphics personnel prior to order entry. The stripe shall align on the cab face as specified by customer and go straight back. | $1,731 |
| 8300-0243 | Chevron "A" style printed sheet 6" Scotchlite striping on bottom of platform oriented with base of chevron to hinged side. Colors to be Red/Yellow. | $717 |
| 8300-0244 | Reflective tape on four outriggers. Striping to alternate in an "A" pattern printed sheet when viewed from the front or rear of the truck. Colors to be: [#COL]. | $858 |
| 8300-0245 | 5/16" Pin stripe above and below existing Scotchlite stripe. Color: [#COL]. | $897 |
| 8300-0246 | Yellow M 983-71 rubrail scotchlite insert. | $486 |
| 8300-0247 | NFPA Scotchlite Stripe - 8" wide with overlaid striping. Overlaid striping width and spacing shall be as specified in shop order and straight on front sides and rear of cab and body. Color: [#COL]. Location: [#LOC]. | $1,562 |
| 8300-0248 | Chevron "A" style 6" printed sheet Scotchlite striping on entire rear of body. Includes rear facing extrusions panels doors and rear driver and officer compartment face. Colors to be [#COL]. | $1,899 |
| 8300-0249 | SignGold chassis stripe package. Includes 3/4" wide stripe with white pin stripe and arrow ends. Location: driver and officer side of cab low on front cab doors around wheel well and low on rear cab doors. Front cab corners. See photos on file with sales. | $1,237 |
| 8300-0251 | Scotchlite stripe 3" located 1" below existing stripe. Color: [#COL]. | $884 |

| Item No. | Description | |
|---|---|---|
| 8300-0252 | NFPA Scotchlite hockey stripe. The stripe shall be 4"wide with a 3/4" gap above with a 2" wide stripe. The hockey stripe shall go straight across front and may contour as it transitions from cab to body on each side. Color: [#COL]. Location: [#LOC]. | $999 |
| 8300-0254 | Sign gold scroll (2) at front cab corners below windshield with connecting .75" sign gold chassis stripe between scrolls and down to trim. | $357 |
| 8300-0256 | NFPA Scotchlite Stripe - 6" wide striping on the interior of each vertically hinged door. Locate stripe approx 2" up from bottom of the door. Double doors will have a stripe on each door and will count as 1 stripe. Color: Red | $126 |
| 8300-0257 | Scotchlite Stripe - approximately 6" wide straight on front of cab below windshield end at radius corners. Stripe to be in line (match) the top of the side stripes and trimmed as required at the front cab horizontal radius just above the bumper. Color: [#COL]. | $208 |
| 8300-0258 | Chevron "A" style 6" Blue 3M Scotchlite and 983-71 Yellow 3M "Diamond Grade" striping on rear of body. Includes rear facing extrusions panels and doors inboard/outboard of the beavertails (if applicable). | $2,460 |
| 8300-0259 | Chevron "A" style 3M Diamond Grade striping in rubrail. Colors to be: [#COL] | $689 |
| 8300-0263 | Printed reflective striping on outboard facing surface only for the (8) jack leg covers. Includes (4) outrigger covers and (4) fixed painted plate filler panels. Striping to alternate in an "A" style 6" pattern when viewed from the side of the truck. Colors to be: [#COL]. | $274 |
| 8300-0264 | Paint break Scotchlite chassis stripe - 1" Wide - Red [#COL] Black. To be located above existing paint break. | $200 |
| 8300-0265 | NFPA Scotchlite Stripe - 6" wide with "Z". Stripe straight on front sides and rear of cab and body. "Z" location to be specified by customer. Color: White on cab and body / Ruby Red on body doors. Location: bottom of stripe flush with bottom of cab and straight back. | $1,202 |
| 8300-0267 | NFPA Scotchlite Stripe - 9.5" wide and straight on front sides and rear of cab and body. Color: [#COL]. Location: [#LOC]. | $1,237 |
| 8300-0269 | NFPA Scotchlite stripe. Hillsborough County hockey stripe with 1" red 1/4" white and 6" black with (2) 1" lemon yellow stripes centered on top of black stripe with 1/4" gap. See photos on file with sales. | $3,761 |
| 8300-0271 | Chevron "A" style 6" 3M "Diamond Grade" striping on interior of front bumper lid. Colors to be [#COL]. | $892 |
| 8300-0272 | NFPA Scotchlite Stripe - 2" and 4" wide with interlocking hockey. Stripe straight on front sides and rear of cab and body. Hockey location to be specified by customer. 2" above 4" with 1" gap between stripes. Color: [#COL]. Location: [#LOC]. | $1,697 |
| 8300-0273 | Chevron "A" style 6" Reflexite V98 striping on front bumper. Colors to be [#COL]. | $788 |
| 8300-0274 | Chevron "A" style 6" Reflexite V98 striping full width on rear of body. Includes rear facing extrusions panels and doors. Colors to be [#COL]. | $2,091 |
| 8300-0279 | Stripe cab lock bar. Color: White. | $78 |
| 8300-0280 | Chevron "A" style 6" Reflexite V98 striping on (2) outriggers. Striping to alternate in an "A" pattern when viewed from the front or rear of the truck. Colors to be: [#COL]. | $680 |
| 8300-0281 | Chevron "A" style 6" Reflexite V98 striping on (4) outriggers. Striping to alternate in an "A" pattern when viewed from the front or rear of the truck. Colors to be: [#COL]. | $905 |
| 8300-0286 | Chevron "A" style 6" Reflexite V98 striping full width on rear of body (does not include the B1 door and/or center aerial ladder tunnel door). Includes rear facing extrusions panels and doors. Colors to be [#COL]. | $1,891 |
| 8300-0287 | Sign Gold Stripe - 3/4" Wide aerial sign plate - Black Gold Black. The striping shall create a border around sign plate lettering. | $1,183 |
| 8300-0288 | Sign Gold Body Stripe - 3/4" Wide - Black Gold Black. To be located on upper body sides terminating with an arrow at each end. | $685 |
| 8300-0289 | Paint Break Sign Gold Chassis Stripe - 3/4" Wide - Black Gold Black. To be located at the same approximate position as a paint break with dip to grille. | $263 |
| 8300-0291 | Scotchlite stripe 1" located 2" above and below existing stripe. Color: [#COL]. | $671 |
| 8300-0292 | Chevron "A" style 6" Reflexite V98 striping on rear of body. Includes rear facing extrusions panels and doors inboard of beavertails (if equipped). Does not include rear facing outboard compartment faces. Colors to be [#COL]. | $1,885 |
| 8300-0293 | Stripe cab lock bar. Color: Chevron red/yellow. | $78 |
| 8300-0294 | Florescent Yellow Green/Red Diamond Grade scotchlite. Locate on front of roll-out tray(s) front lip of adjustable/fixed shelves and tool board(s) on outer vertical edge on both sides (if applicable). | $438 |
| 8300-0296 | Scotchlite stripe 2" located flush directly above and below existing stripe. Color: [#COL]. | $849 |

| Item No. | Description | |
|---|---|---|
| 8300-0297 | NFPA Scotchlite Stripe - 3" and 6" wide with interlocking "Z". Stripe straight on front sides and rear of cab and body. "Z" location to be specified by customer. 3" above 6" with 1" gap between stripes. Color: [#COL]. Location: [#LOC]. | $2,105 |
| 8300-0298 | Scotchlite stripe 1" located below existing stripe. Color: (1) white (1) gold. | $354 |
| 8300-0299 | Diamond grade reflective striping on outboard facing surface only for the (8) jack leg covers. Includes (4) outrigger covers and (4) fixed painted plate filler panels. Striping to alternate in an "A" style 6" pattern when viewed from the side of the truck. Colors to be: [#COL]. | $274 |
| 8300-0300 | Reflective [#COL] 3M Diamond Grade striping positioned in the "A" formation located in the lower L5/R5 body door panels extending approximately 12" from the door's bottom. | $312 |
| 8300-0301 | NFPA Scotchlite Stripe - 6" wide with "S". Stripe straight on front sides and rear of cab and body. "S" location to be specified by customer. Color: [#COL]. Location: [#LOC]. | $1,425 |
| 8300-0303 | Scotchlite Stripe - 10" wide reflective stripe on heavy duty front bumper. Color: [#COL]. | $603 |
| 8300-0304 | NFPA Scotchlite Stripe - 1"-6"-1" wide with interlocking hockey. Stripe straight on front sides and rear of cab and body. Hockey location to be specified by customer. 1" above and below 4" with 1" gap between stripes. Color: [#COL]. Location: [#LOC]. | $1,895 |
| 8300-0305 | Scotchlite Stripe - 2" wide and straight on front/sides of cab and sides/rear of body. Color: [#COL]. Location: [#LOC]. | $425 |
| 8300-0307 | Reflective [#COL] Reflexite V98 striping positioned in the "A" formation located on all vertically hinged body door panels (forward door only on double doors) extending approximately 12" from the door's bottom. | $1,558 |
| 8300-0309 | Blue reflective tape on (4) outriggers. | $440 |
| 8300-0311 | Scotchlite stripe 2" located 2" above existing stripe. Color: [#COL]. | $425 |
| 8300-0312 | Scotchlite Stripe - 4" wide with graphic white "S"; See photos on file with sales. Stripe straight on front sides and rear of cab and body. "S" location to be specified by customer. Color: Orange. Location: bottom of stripe flush with top of bumper and straight back. | $1,638 |
| 8300-0314 | Signgold aerial sign plate scroll package. (1) each corner of the aerial sign plates with connecting connecting 3/4" signgold stripe. | $1,248 |
| 8300-0316 | Chevron "A" style 6" individual Scotchlite striping full width on rear of body. Includes driver and officer rear compartment face smooth plate panels and/or doors outboard and above the center rear compartment opening. Does not include rear compartment door. Colors to be [#COL]. | $1,347 |
| 8300-0318 | NFPA Scotchlite Stripe - 6" wide and straight on body only. Color: [#COL]. Location: [#LOC]. | $760 |
| 8300-0319 | [#COL] chevron "A" style 6" Reflexite V98 striping on end of fly section | $582 |
| 8300-0321 | Chevron "A" style 6" printed sheet Scotchlite striping on rear of body between beavertails below full width intermediate step. Colors to be [#COL]. | $1,149 |
| 8300-0325 | Paint Break Sign Silver Chassis Stripe - 3/4" Wide - Black Silver Black. To be located above existing paint break. | $263 |
| 8300-0327 | Scotchlite stripe (PR) 1/4in. located directly above and below existing stripe. Color: [#COL]. | $704 |
| 8300-0329 | Chevron "A" style 6" 3M "Diamond Grade" striping full width on rear of body; half height from bottom per NFPA/ULC requirements. Includes rear facing extrusions panels and doors. Colors to be [#COL]. | $1,422 |
| 8300-0336 | Reflective [#COL] printed Scotchlite striping positioned in the "A" formation located on all vertically hinged body door panels (forward door only on double doors) extending approximately 12" from the door's bottom. | $928 |
| 8400-0000 | Vision flags on canopy windows (PR). | $565 |
| 8400-0004 | Install customer supplied logos on front cab doors. | $205 |
| 8400-0005 | A pair of customer logos for cab supplied to E-One in a digital format. | $885 |
| 8400-0008 | Star of life logo 12". Location: [#LOC]. | $104 |
| 8400-0009 | American Flag (EA). Approx size: 7"H x 14"W. Location: [#LOC] | $118 |
| 8400-0010 | Install customer logo from an existing E-ONE design (EA). Location: [#LOC] | $127 |
| 8400-0011 | Vision flag on officer canopy window. | $285 |
| 8400-0012 | Star of life logo 22.5". Location: [#LOC] | $204 |
| 8400-0013 | Signgold Fleur de Lis 5" logo (PR) with black outline. Location: [#LOC]. | $204 |
| 8400-0015 | Install customer supplied logos on rear cab doors. | $205 |
| 8400-0017 | A customer logo supplied to E-ONE in a digital format. Location: [#LOC]. | $313 |
| 8400-0018 | Star of life logo 20". Location: (1) each side centered on canopy window. | $344 |
| 8400-0023 | Install customer supplied logo. Location: [#LOC]. | $72 |
| 8400-0024 | Install up to 12" SignGold customer logo from an existing E-ONE design (EA). Location: [#LOC]. | $189 |
| 8400-0025 | A customer SignGold logo (up to 12") supplied to E-ONE in a digital format. Location: [#LOC]. | $398 |
| 8400-0029 | Reflective American Flag (PR) - wavy. Approx size: 12"H x 18"W. Location: [#LOC]. | $235 |

| Item No. | Description | |
|---|---|---|
| 8400-0033 | Logo E-ONE (PR) on aerial lift cylinder. Logo to be sign gold material approx 14" long located midway along outward surface of cylinder. | $86 |
| 8400-0034 | Vision flags (Canadian ribbon style) on canopy windows (PR). | $565 |
| 8400-0036 | Star of life logo 20" (PR). Location: (1) each side centered between cab doors. | $344 |
| 8400-0037 | Vision flags (state of Texas ribbon style) on canopy windows (PR). | $565 |
| 8400-0038 | Vision flags (Canadian ribbon style) on rear cab door windows and side windows of vista extension (PR). | $565 |
| 8400-0039 | Star of life logo 12" with black outline. Location: [#LOC]. | $104 |
| 8400-0042 | Vision 9/11 flag raising on canopy windows (PR). | $565 |
| 8400-0045 | Yellow label with black lettering to read "Clear front bumper prior to tilting cab". Locate above cab tilt door. | $55 |
| 8400-0048 | Install customer supplied logos/striping. Location: Sign plates lettering logos on front cab doors logo on officer side medical cabinet lettering on rear cab doors and 911 logos on each side rear body doors. Install customer supplied 3/8" striping above and below 6" stripe and chassis stripe at paint break. See photos on file. | $718 |
| 8400-0049 | American Flag (EA). Approx size: 16"H x 27"W. Location: Portable tank at rear and driver side of body. | $350 |
| 8400-0050 | Vision 9/11 twin tower tribute on canopy windows (PR). | $565 |
| 8400-0051 | Reflective Canadian Flag (PR) - wavy. Approx size: 12"H x 18"W. Location: [#LOC]. | $235 |
| 8400-0052 | Vision graphic on canopy windows (PR). Customer supplied to E-ONE in a digital format. | $781 |
| 8400-0053 | Waving American Flag (EA). Approx size: 7"H x 14"W. Location: [#LOC]. | $118 |
| 8400-0054 | Metric markings and corresponding numerical indicators shall be provided along each inside and outside top rail of the base section of the aerial every three (3) meters and line markers every one (1) meter. The markings shall indicate various positions of extension up to full. Markings and indicators shall be clearly visible to the console operator to aid in visibility during hours of darkness. The material shall be of a reflective type. Color: Black. | $324 |
| 8400-0055 | Reflective Texas state flag (PR) - wavy. Approx size: 12"H x 18"W. Location: [#LOC]. | $235 |
| 8400-0058 | American Flag full size on bottom of aerial platform heat shield. | $730 |
| 8400-0059 | Vision 9/11 twin tower tribute on rear cab non-vista door windows (PR). | $565 |
| **WARRANTY, DOCUMENTATION** | | |
| 9300-0000 | Vehicle familiarization aerial (Domestic). | $5,531 |
| 9300-0002 | Aerial training manual (EA). | $36 |
| 9300-0003 | Waterous Compressed Air Foam System training. | $3,392 |
| 9300-0009 | Manuals Operator and Service CD-ROM. | $350 |
| 9300-0010 | Approval Drawings | $1,009 |
| 9300-0012 | Pump panel approval drawings. | $406 |
| 9300-0013 | Approval Drawings Revised | $203 |
| 9300-0017 | Manuals Printed (Set). | $914 |
| 9300-0018 | Manuals Operator and Service CD-ROM (additional set). | $52 |
| 9300-0022 | Aerial Adjustment/Inspection Visit for a Bronto | $8,484 |
| 9300-0031 | Dash panel layout approval drawings | $527 |
| 9300-0038 | Manuals operator service and exploded view parts CD-ROM. | $350 |
| 9300-0039 | Manuals printed (set) with exploded view parts. | $914 |
| 9300-0040 | As built electrical drawings. | $2,451 |
| 9300-0041 | As built plumbing drawings. | $3,061 |
| 9300-0044 | Transmission programming print-out - provided at delivery. | $119 |
| 9300-0046 | Unit to have post production wheel alignment. | $277 |
| 9300-0303 | Approval Drawings - Top View of body and pump module section of the vehicle. | $277 |
| 9300-0304 | Manuals printed (1). | $860 |
| 9300-0305 | Advent/Hot Shot Foam System Training. | $5,273 |
| 9300-0306 | Approval Drawings-Additional views. Top view of body and pump module areas. Detailed top view of the interior cab view layout. | $554 |
| 9300-0312 | Inspection / adjustment visit for an aerial ladder / platform (6/12/24 month). | $10,339 |
| 9300-0315 | Vehicle familiarization aerial (Domestic) additional per day. | $1,267 |

**Notes:**

**1) Availability of options are limited by other options selected, and not all options are available in every chassis/apparatus configuration. Selection of an option may require several of the above parts/items to complete the option package.**

| Item No. | Description |
| --- | --- |

**2) Certain options, alone or in combination with other options, may require heavier axle/suspension packages, longer frames, or reinforced frames at additional cost per the above price list.**
**3) To configure options, the E-One State Term Schedule authorized dealer will use quote configuration software to select the components necessary to effect the option, feature, or configuration requested and quote the total option price.**

Fire Apparatus Quotation for:
STATE OF OHIO TERM SCHEDULE

Quotation Number: 57496 Rev: 9

Unit Description: WMST-COMM
Quote Description: Water Master Tanker Commercial Chassis

| Salescode | Extended Description | Qty |
|---|---|---|
| **Watermaster Tanker Base Model** | | |
| 0502-0005 | A Water Master apparatus being compliant to NFPA 1901 current edition (plumbing as applicable) or ULC (as applicable) to be provided. | 1 |
| **TESTING COMPLIANCE STANDARD** | | |
| 3340-1037 | Hosebed hoseload allowance on the apparatus shall be 800 lbs. | 1 |
| 3340-1137-11Z | Equipment allowance on the apparatus shall be 1000 lbs. This allowance is in addition to the weight of the hoses and ground ladders listed in the shop order as applicable. | 1 |
| **CHASSIS MODEL** | | |
| 1005-0697 | International 7400 (2) door, 215" WB, front tow hooks, 14K & 26K axles with ESC, Officer side vertical exhaust with pipe guard, ABS brakes, 50 gal driver side fuel tank, (3) 1950 CCA batteries, 320 alternator, ember separator and AC. | 1 |
| 1005-0732 | Chassis Prep International with Navistar N series SCR engine and single rear axle. Includes rear bumper/tow eyes, high idle, master light switch and master battery switch. | 1 |
| **BUMPERS** | | |
| 1160-0056 | OEM chrome front bumper. | 1 |
| **WHEEL OPTIONS** | | |
| 1050-0050 | Commercial chassis rims painted job color. For use with single rear axle. | 1 |
| **TIRE OPTIONS** | | |
| 1060-0117 | RWC AirGuard LED tire pressure monitoring valve stem caps (6) for single rear axle applications. | 1 |
| **ENGINES & TRANSMISSIONS** | | |
| 1200-0122 | Electronic speed limiting set to 60 MPH. | 1 |
| 1200-0279 | International Navistar N9 SCR 330hp@2000 RPM/950ftlbs torque@1200 RPM 2200 RPM GOV. | 1 |
| **CHASSIS OPTIONS** | | |
| 1680-0142 | Two (2) hood-mountedl Hadley air horns with driver and officer mounted foot switches. International. | 1 |
| 1680-0143 | The commercial chassis to have seat belt and chassis pre-wiring for NFPA seating indicator and vehicle data recorder. | 1 |
| **CAB BADGE PACKAGE** | | |
| 1610-0000 | Cab and body to have applicable E-ONE logos. | 1 |
| **CAB DOOR OPTIONS** | | |
| 1550-0059-000-G6 | Reflective Red/Lemon Yellow printed striping positioned in the "A" formation located on the cab door panels. | 1 |
| **CAB STEP OPTIONS** | | |
| 1640-0014 | Standard OEM chassis trim package International 4400 or 7400. Includes light mounting bracket. | 1 |
| **SEATS** | | |

| | | |
|---|---|---|
| 1510-0142 | Seating Package Two (2) Door International. Includes One (1) Gra-Mag fixed driver seat and (1) Gra-Mag fixed officer seat. | 1 |
| 1510-0143 | One (1) two person seating capacity tag- driver side area and two (2) seat belt warning tags- one (1) each cab door. For use with International chassis. | 1 |
| MISC INTERIOR CAB OPTIONS | | |
| 1685-0142 | Main control console. Locate in cab centered between driver and officer. Includes NFPA in-cab controls/switching. | 1 |
| 1685-0143 | Cab gauge cluster with english dominant. | 1 |
| CAB ELECTRICAL OPTIONS | | |
| 1750-0347 | Battery charger with indicator, inlet receptacle and air inlet with mounting plate. Locate to driver side of cab below driver door opening. | 1 |
| BODY MODEL | | |
| 3080-0209 | Single axle body with 2000 gallon tank (with auxiliary rear tank fill). Includes driver side forward body access to vacuum pump, compartments L1/R1 with satin roll-up doors with header, driver and officer side compartment top storage areas (driver side includes double hose restraints) and rear body/bumper trim. | 1 |
| 3080-0214 | Anodes for water tank - (3) anodes located in bottom of water tank. | 1 |
| COVERS | | |
| 3305-0073 | Vinyl crosslay cover. Includes mechanical hold-downs on top outer corners and quick release side flap hold downs. Cover color: Red. | 1 |
| PUMP MODULE | | |
| 3130-0253 | Side mount pump module. Includes upper area for double stacked double preconnects. | 1 |
| LADDER STORAGE / RACKS | | |
| 3365-0150 | Manually operated drop down rack on officer body. Secures portable folding tank with capacity of main tank on body. | 1 |
| MISC BODY OPTIONS | | |
| 3340-0504 | E-ONE logo mounted (1) each side on forward body side rearward of water level gauge and (1) rear below the rear tank inlet and offset to driver side. Logos to be sized as applicable to available space. | 1 |
| PUMPS | | |
| 4005-0072 | PTO for use with PM80 vacuum pump and EVS3000 transmission. | 1 |
| 4005-0075 | PTO for use with AP50 pump and EVS3000 transmission. | 1 |
| 4005-0161 | PM80 Vacuum Pump. Includes primary and secondary shut offs, (4) water level gauges- (3) body and (1) cab and the (3) inlets/outlets with switching. | 1 |
| PLUMBING KITS | | |
| 4410-0053 | Plumbing kit with Hale AP50 (with officer side steamer) pump (500GPM). Includes (1) 2.5" Driver Side Discharge with droop and cap, (1) 2.5" Officer Side Discharge with droop and cap and (2) 1.5" Crosslay Discharges. The discharges are to be labeled and color coded in compliance with current NFPA. | 1 |
| PUMP OPTIONS | | |
| 4015-0093 | The optional pump to be NFPA or ULC (as applicable) compliant. Includes primer, pump shift and indicators, (1) 2.5" driver side aux. intake with swing handle and test ports. | 1 |
| 4015-0168 | Engine cooler. For use with International 4400, 7400 and 7500 chassis. | 1 |
| 4015-0186 | Trident Pump Primer W/3 Barrel Push Button Control. (In place of standard primer.) Requires a 15.6 CFM or larger air compressor. | 1 |
| 4015-0210 | Pump cooler with Innovative Control 1/4 turn valve with "T" handle and label. | 1 |
| PRESSURE GOVERNORS | | |
| 4465-0025 | Class 1 TPG Plus pressure governor. Includes master intake and discharge gauges, water, oil, volt and tachometer for WaterMaster. | 1 |
| GAUGES | | |
| 4435-0141 | Pump module discharge gauges (4) to be english dominant. For use with AP/MBP pumps. | 1 |

| | | |
|---|---|---|
| **ELECTRICAL SYSTEMS** | | |
| 5010-0020 | Body and cab electrical system. | 1 |
| 5150-0089 | Vehicle data recorder - 2009 NFPA compliant. Includes occupant detection with display. Display location on cab dash near the transmission shifter. | 1 |
| **LIGHT BARS** | | |
| 5380-0102 | Whelen Justice model JE2NFPA 56" with MKEZ7 mounts. All LED (forward facing) lightbar. | 1 |
| **WARNING LIGHT PACKAGES** | | |
| 5550-0118 | Whelen LED lower level cab warning light package. Includes light heads wiith bezels located (1) each side of hood area and (1) each side forward facing mounted in grill area. | 1 |
| 5550-0119 | Whelen LED lower level body warning light package. Includes (6) LED light heads located (1) each side forward of the rear wheel well, (1) each side rearward of the rear wheel well and (1) each side on rear of body down low below the taillights (offset outboard). | 1 |
| **WARNING LIGHTS** | | |
| 5600-0204 | Whelen beacon Model RB6 (PR)- red driver/amber officer. Location: upper rear tank. | 1 |
| **DOT LIGHTING** | | |
| 5150-0088 | DOT STT/BU lighting. Includes red LED stop/tail/turn and clear incandescent back-up lights. Lights mounted horizontally on the rear of the body | 1 |
| **LIGHTS - COMPARTMENT, STEP & GROUND** | | |
| 5380-0108 | Cab (WHLN) LED ground lighting package with LED step lighting. Includes (1) Whelen light per side below the cab lower steps and (1) LED step light below the lower area of the cab for step lighting. | 1 |
| 5380-0109 | LED (Whelen) underbody ground lighting. Includes lighting below the forward body and below the rear body. | 1 |
| 5380-0110 | LED (Whelen) compartment light package. For use in L1 and R1 compartments. | 1 |
| **LIGHTS - NON-WARNING** | | |
| 5400-0122 | (7) Halogen scene lighting package. Locate lights - (1) forward area of tank, (2) each side of tank and (2) at rear of tank/body. | 1 |
| **CAMERAS / INTERCOM** | | |
| 5350-0106 | Camera system. Includes in-cab mounted monitor and officer side and rear body mounted cameras. | 1 |
| **MISC ELECTRICAL** | | |
| 5110-0049 | NFPA cab siren and speaker (WHLN) package. Includes (1) siren with (1) speaker officer side behind bumper cut-out (includes mounting bracket). | 1 |
| **HOSE / NOZZLES** | | |
| 7700-0100 | Adaptor, hose and strainer package. For use with vacuum pump system. For use with 2000 thru 4000 gallon tanks only. | 1 |
| 7700-0101 | Aluminum 6" storz x 5" NH female thread swivel adaptor. For use with AP50 Pump Inlet. | 1 |
| **MISC LOOSE EQUIPMENT** | | |
| 7900-0165 | DOT driveaway kit. Includes three (3) triangular reflectors with case. | 1 |
| **EXTERIOR PAINT** | | |
| 8100-0196 | Cab paint FLNA 3225 Red (sikkens published). International NAV2931 | 1 |
| **STRIPING** | | |
| 8300-0106 | Chevron "A" style 6" Scotchlite striping on rear of tank. Colors to be Yellow/Red. | 1 |
| 8300-0107 | 4" White/Red Scotchlite stripe. Locate white on cab with bottom of stripe even with bottom of cab. The red is to be straight on the body side storage trays. | 1 |

| WARRANTY / STANDARD & EXTENDED | | |
|---|---|---|
| 9100-0039 | 1 year full warranty. | 1 |
| 9100-0043 | 10 Year stainless steel plumbing warranty. | 1 |

| SUPPORT, DELIVERY, INSPECTIONS AND MANUALS | | |
|---|---|---|
| 9300-0316 | Fire Apparatus Safety Guide published by FAMA, latest edition. | 1 |

PRICE - E-ONE WATERMASTER SA TANKER - INTERNATIONAL CHASSIS - $263,936

# STATE OF OHIO TERM SCHEDULE

## 4200 SURFACE RD
## COLUMBUS, OH 43228

*Quote No: 57496*

8/27/2016

Quote Rev:9 Drawing Rev:5

2000 GALLON TANK

500 GPM PUMP

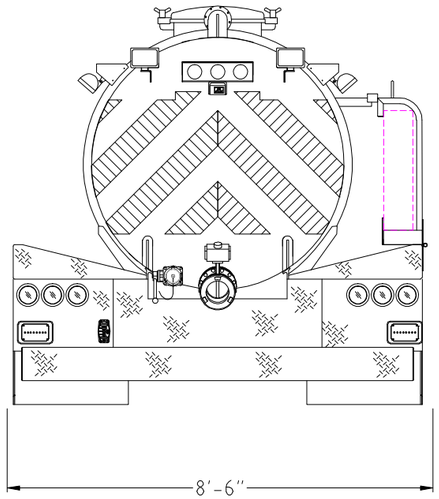


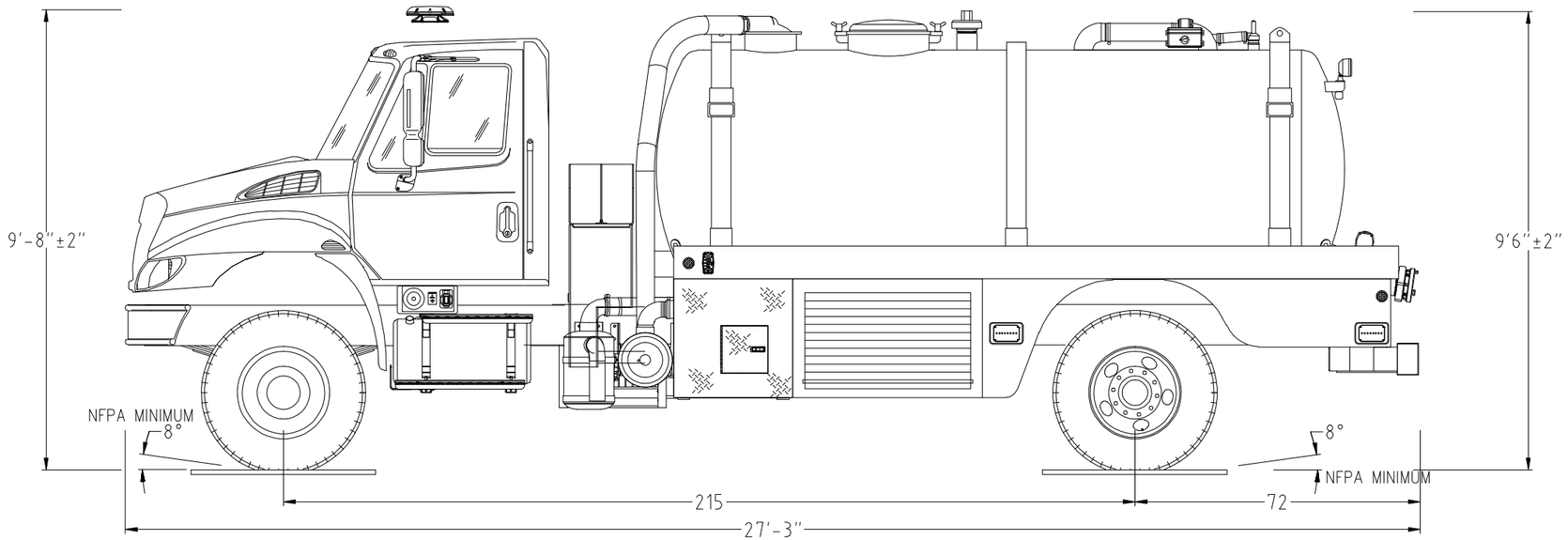


POWERED BY EZDRAW

Notice: This drawing provides a GENERAL REPRESENTATION of the vehicle configuration and should be used for evaluation purposes. The respective dimensions shown,including overall height and length, are estimates and may vary due to manufacturing processes. All other items such as lighting and fixtures, plumbing, compartmentation, and other generally assembled details are shown for REFERENCE ONLY and may not be a direct reflection of the final truck configuration. In ALL situations where this drawing may conflict with the specifications, THE SPECIFICATIONS, AS REFLECTED IN THE APPROVED SHOP ORDER, SHALL PREVAIL. Unless otherwise specified, the proposed apparatus will be manufactured to the latest NFPA recommendations as well as other applicable federally regulated safety regulations. E-One reserves the right to engineer and incorporate design improvements and changes without notice, while adhering to the intent of the specification.

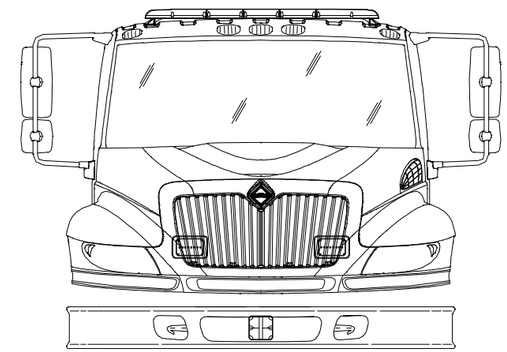

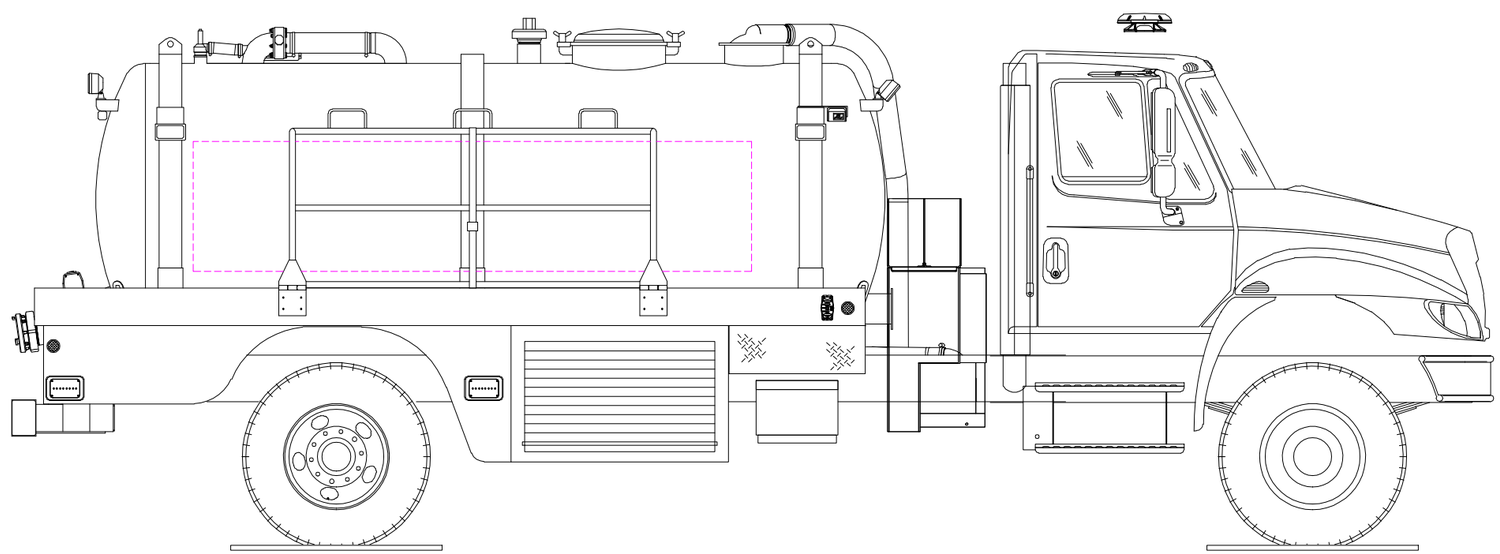

POWERED BY

EZDRAW

Fire Apparatus Quotation for:
STATE OF OHIO TERM SCHEDULE

Quotation Number: 57497 Rev: 8

Unit Description: WMST-COMM
Quote Description: Water Master Tanker Commercial Chassis

| Salescode | Extended Description | Qty |
|---|---|---|
| **Watermaster Tanker Base Model** | | |
| 0502-0005 | A Water Master apparatus being compliant to NFPA 1901 current edition (plumbing as applicable) or ULC (as applicable) to be provided. | 1 |
| **TESTING COMPLIANCE STANDARD** | | |
| 3340-1037 | Hosebed hoseload allowance on the apparatus shall be 800 lbs. | 1 |
| 3340-1137-11Z | Equipment allowance on the apparatus shall be 1000 lbs. This allowance is in addition to the weight of the hoses and ground ladders listed in the shop order as applicable. | 1 |
| **CHASSIS MODEL** | | |
| 1005-0707 | Chassis Prep International with Navistar N series SCR engine and tandem rear axle. Includes rear bumper/tow eyes, high idle, master light switch and master battery switch. | 1 |
| 1005-0735 | International 7400 (2) door, 246" WB, front tow hooks, 18K & 40K tandem axle with ESC, Officer side vertical exhaust with pipe guard, ABS brakes, 50 gal driver side fuel tank, (3) 1950 CCA batteries, 320 alternator, ember separator and AC. | 1 |
| **BUMPERS** | | |
| 1160-0056 | OEM chrome front bumper. | 1 |
| **WHEEL OPTIONS** | | |
| 1050-0052 | International chassis rims painted job color. For use with tandem rear axle. | 1 |
| **TIRE OPTIONS** | | |
| 1060-0119 | RWC AirGuard LED tire pressure monitoring valve stem caps (10) for tandem rear axle applications. | 1 |
| **ENGINES & TRANSMISSIONS** | | |
| 1200-0122 | Electronic speed limiting set to 60 MPH. | 1 |
| 1200-0279 | International Navistar N9 SCR 330hp@2000 RPM/950ftlbs torque@1200 RPM 2200 RPM GOV. | 1 |
| **CHASSIS OPTIONS** | | |
| 1680-0142 | Two (2) hood-mountedl Hadley air horns with driver and officer mounted foot switches. International. | 1 |
| 1680-0143 | The commercial chassis to have seat belt and chassis pre-wiring for NFPA seating indicator and vehicle data recorder. | 1 |
| **CAB BADGE PACKAGE** | | |
| 1610-0000 | Cab and body to have applicable E-ONE logos. | 1 |
| **CAB DOOR OPTIONS** | | |
| 1550-0059-000-G6 | Reflective Red/Lemon Yellow printed striping positioned in the "A" formation located on the cab door panels. | 1 |
| **CAB STEP OPTIONS** | | |
| 1640-0014 | Standard OEM chassis trim package International 4400 or 7400. Includes light mounting bracket. | 1 |
| **SEATS** | | |

| | | |
|---|---|---|
| 1510-0142 | Seating Package Two (2) Door International. Includes One (1) Gra-Mag fixed driver seat and (1) Gra-Mag fixed officer seat. | 1 |
| 1510-0143 | One (1) two person seating capacity tag- driver side area and two (2) seat belt warning tags- one (1) each cab door. For use with International chassis. | 1 |
| MISC INTERIOR CAB OPTIONS | | |
| 1685-0142 | Main control console. Locate in cab centered between driver and officer. Includes NFPA in-cab controls/switching. | 1 |
| 1685-0143 | Cab gauge cluster with english dominant. | 1 |
| CAB ELECTRICAL OPTIONS | | |
| 1750-0347 | Battery charger with indicator, inlet receptacle and air inlet with mounting plate. Locate to driver side of cab below driver door opening. | 1 |
| BODY MODEL | | |
| 3080-0211 | Tandem axle body with 3000 gallon tank (with auxiliary rear tank fill). Includes driver side forward body access to vacuum pump, compartments L1/R1 with satin roll-up doors with header, driver and officer side compartment top storage areas (driver side includes double hose restraints) and rear body/bumper trim. | 1 |
| 3080-0214 | Anodes for water tank - (3) anodes located in bottom of water tank. | 1 |
| COVERS | | |
| 3305-0073 | Vinyl crosslay cover. Includes mechanical hold-downs on top outer corners and quick release side flap hold downs. Cover color: Red. | 1 |
| PUMP MODULE | | |
| 3130-0253 | Side mount pump module. Includes upper area for double stacked double preconnects. | 1 |
| LADDER STORAGE / RACKS | | |
| 3365-0150 | Manually operated drop down rack on officer body. Secures portable folding tank with capacity of main tank on body. | 1 |
| MISC BODY OPTIONS | | |
| 3340-0504 | E-ONE logo mounted (1) each side on forward body side rearward of water level gauge and (1) rear below the rear tank inlet and offset to driver side. Logos to be sized as applicable to available space. | 1 |
| PUMPS | | |
| 4005-0073 | PTO for use with PM100 vacuum pump and EVS3000 transmission. | 1 |
| 4005-0075 | PTO for use with AP50 pump and EVS3000 transmission. | 1 |
| 4005-0162 | PM100 Vacuum Pump (for use with AP or MBP pumps only). Includes primary and secondary shut offs, (4) water level gauges- (3) body and (1) cab and the (3) inlets/outlets with switching. | 1 |
| PLUMBING KITS | | |
| 4410-0053 | Plumbing kit with Hale AP50 (with officer side steamer) pump (500GPM). Includes (1) 2.5" Driver Side Discharge with droop and cap, (1) 2.5" Officer Side Discharge with droop and cap and (2) 1.5" Crosslay Discharges. The discharges are to be labeled and color coded in compliance with current NFPA. | 1 |
| PUMP OPTIONS | | |
| 4015-0093 | The optional pump to be NFPA or ULC (as applicable) compliant. Includes primer, pump shift and indicators, (1) 2.5" driver side aux. intake with swing handle and test ports. | 1 |
| 4015-0168 | Engine cooler. For use with International 4400, 7400 and 7500 chassis. | 1 |
| 4015-0186 | Trident Pump Primer W/3 Barrel Push Button Control. (In place of standard primer.) Requires a 15.6 CFM or larger air compressor. | 1 |
| 4015-0210 | Pump cooler with Innovative Control 1/4 turn valve with "T" handle and label. | 1 |
| PRESSURE GOVERNORS | | |
| 4465-0025 | Class 1 TPG Plus pressure governor. Includes master intake and discharge gauges, water, oil, volt and tachometer for WaterMaster. | 1 |

| | | |
|---|---|---|
| **GAUGES** | | |
| 4435-0141 | Pump module discharge gauges (4) to be english dominant. For use with AP/MBP pumps. | 1 |
| **ELECTRICAL SYSTEMS** | | |
| 5010-0020 | Body and cab electrical system. | 1 |
| 5150-0089 | Vehicle data recorder - 2009 NFPA compliant. Includes occupant detection with display. Display location on cab dash near the transmission shifter. | 1 |
| **LIGHT BARS** | | |
| 5380-0102 | Whelen Justice model JE2NFPA 56" with MKEZ7 mounts. All LED (forward facing) lightbar. | 1 |
| **WARNING LIGHT PACKAGES** | | |
| 5550-0118 | Whelen LED lower level cab warning light package. Includes light heads wiith bezels located (1) each side of hood area and (1) each side forward facing mounted in grill area. | 1 |
| 5550-0119 | Whelen LED lower level body warning light package. Includes (6) LED light heads located (1) each side forward of the rear wheel well, (1) each side rearward of the rear wheel well and (1) each side on rear of body down low below the taillights (offset outboard). | 1 |
| **WARNING LIGHTS** | | |
| 5600-0204 | Whelen beacon Model RB6 (PR)- red driver/amber officer. Location: upper rear tank. | 1 |
| **DOT LIGHTING** | | |
| 5150-0088 | DOT STT/BU lighting. Includes red LED stop/tail/turn and clear incandescent back-up lights. Lights mounted horizontally on the rear of the body | 1 |
| **LIGHTS - COMPARTMENT, STEP & GROUND** | | |
| 5380-0108 | Cab (WHLN) LED ground lighting package with LED step lighting. Includes (1) Whelen light per side below the cab lower steps and (1) LED step light below the lower area of the cab for step lighting. | 1 |
| 5380-0109 | LED (Whelen) underbody ground lighting. Includes lighting below the forward body and below the rear body. | 1 |
| 5380-0110 | LED (Whelen) compartment light package. For use in L1 and R1 compartments. | 1 |
| **LIGHTS - NON-WARNING** | | |
| 5400-0122 | (7) Halogen scene lighting package. Locate lights - (1) forward area of tank, (2) each side of tank and (2) at rear of tank/body. | 1 |
| **CAMERAS / INTERCOM** | | |
| 5350-0106 | Camera system. Includes in-cab mounted monitor and officer side and rear body mounted cameras. | 1 |
| **MISC ELECTRICAL** | | |
| 5110-0050 | NFPA cab siren and speaker (WHLN) package. Includes (1) siren with (1) speaker located center in front bumper (includes mounting bracket). | 1 |
| **HOSE / NOZZLES** | | |
| 7700-0100 | Adaptor, hose and strainer package. For use with vacuum pump system. For use with 2000 thru 4000 gallon tanks only. | 1 |
| 7700-0101 | Aluminum 6" storz x 5" NH female thread swivel adaptor. For use with AP50 Pump Inlet. | 1 |
| **MISC LOOSE EQUIPMENT** | | |
| 7900-0165 | DOT driveaway kit. Includes three (3) triangular reflectors with case. | 1 |
| **EXTERIOR PAINT** | | |
| 8100-0196 | Cab paint FLNA 3225 Red (sikkens published). International NAV2931 | 1 |
| **STRIPING** | | |

| | | |
|---|---|---|
| 8300-0106 | Chevron "A" style 6" Scotchlite striping on rear of tank. Colors to be Yellow/Red. | 1 |
| 8300-0107 | 4" White/Red Scotchlite stripe. Locate white on cab with bottom of stripe even with bottom of cab. The red is to be straight on the body side storage trays. | 1 |

| WARRANTY / STANDARD & EXTENDED | | |
|---|---|---|
| 9100-0039 | 1 year full warranty. | 1 |
| 9100-0043 | 10 Year stainless steel plumbing warranty. | 1 |

| SUPPORT, DELIVERY, INSPECTIONS AND MANUALS | | |
|---|---|---|
| 9300-0316 | Fire Apparatus Safety Guide published by FAMA, latest edition. | 1 |

PRICE - E-ONE WATERMASTER TA TANKER - INTERNATIONAL CHASSIS - $280,839

# STATE OF OHIO TERM SCHEDULE

## 4200 SURFACE RD
## COLUMBUS, OH 43228

*Quote No: 57497*

8/27/2016

Quote Rev:8 Drawing Rev:5

3000 GALLON TANK

500 GPM PUMP

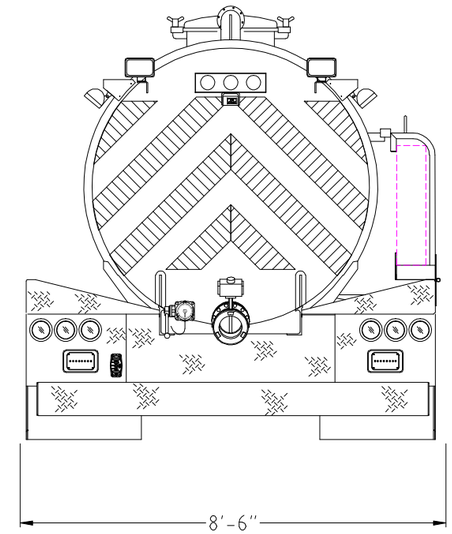


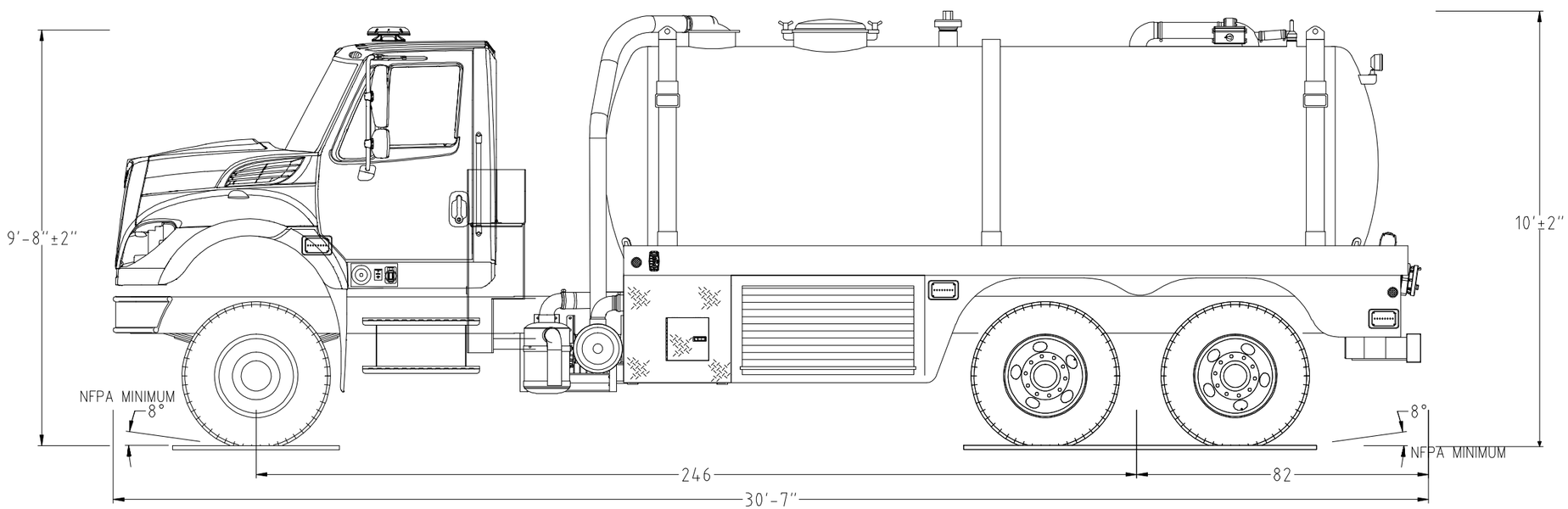


POWERED BY EZDRAW

Notice: This drawing provides a GENERAL REPRESENTATION of the vehicle configuration and should be used for evaluation purposes. The respective dimensions shown,including overall height and length, are estimates and may vary due to manufacturing processes. All other items such as lighting and fixtures, plumbing, compartmentation, and other generally assembled details are shown for REFERENCE ONLY and may not be a direct reflection of the final truck configuration. In ALL situations where this drawing may conflict with the specifications, THE SPECIFICATIONS, AS REFLECTED IN THE APPROVED SHOP ORDER, SHALL PREVAIL. Unless otherwise specified, the proposed apparatus will be manufactured to the latest NFPA recommendations as well as other applicable federally regulated safety regulations. E-One reserves the right to engineer and incorporate design improvements and changes without notice, while adhering to the intent of the specification.

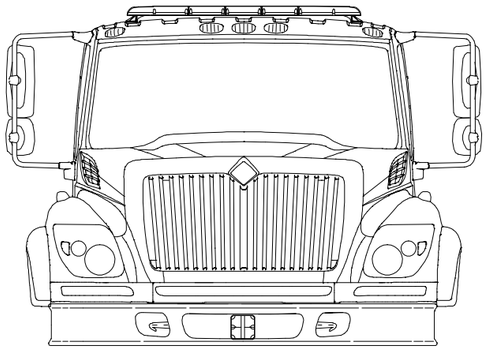

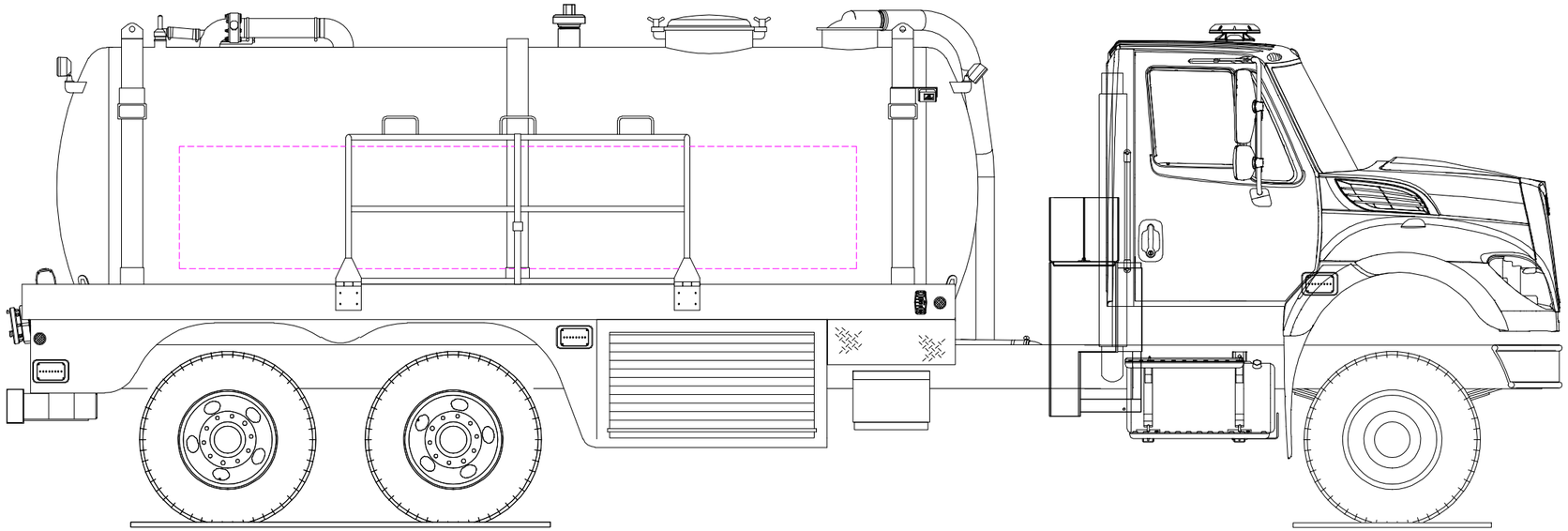

POWERED BY

EZDRAW

# E-ONE OHIO STATE TERM SCHEDULE 2017 OPTIONS PRICE BOOK
## WATERMASTER TANKERS

| Item No. | Description | |
|---|---|---|
| **COMMERCIAL CHASSIS** | | |
| 1005-0475 | International 4400 (2) door 215" WB front tow hooks 14K & 26K axles with ESC Officer side vertical exhaust with pipe guard ABS brakes 50 gal driver side fuel tank (3) 1950 CCA batteries 320 alternator ember separator and AC. | 91784 |
| 1005-0476 | International 4400 (2) door 232" WB front tow hooks 14.6K & 26K axles with ESC Officer side vertical exhaust with pipe guard ABS brakes 50 gal driver side fuel tank (3) 1950 CCA batteries 320 alternator ember separator and AC. | 92416 |
| 1005-0477 | International 4400 (2) door 221" WB front tow hooks 14K & 30K axles with ESC Officer side vertical exhaust with pipe guard ABS brakes 50 gal driver side fuel tank (3) 1950 CCA batteries 320 alternator ember separator and AC. | 93059 |
| 1005-0479 | International 7400 (2) door 242" WB front tow hooks 18K & 40K tandem axle with ESC Officer side vertical exhaust with pipe guard ABS brakes 50 gal driver side fuel tank (3) 1950 CCA batteries 320 alternator ember separator and AC. | 101113 |
| 1005-0480 | International 7400 (2) door 258" WB front tow hooks 18K & 40K tandem axle with ESC Officer side vertical exhaust with pipe guard ABS brakes 50 gal driver side fuel tank (3) 1950 CCA batteries 320 alternator ember separator and AC. | 101288 |
| 1005-0481 | International 7400 (2) door 242" WB front tow hooks 18K & 46K tandem axle with ESC Officer side vertical exhaust with pipe guard ABS brakes 50 gal driver side fuel tank (3) 1950 CCA batteries 320 alternator ember separator and AC. | 104968 |
| 1005-0482 | International 7400 (2) door 258" WB front tow hooks 18K & 46K tandem axle with ESC Officer side vertical exhaust with pipe guard ABS brakes 50 gal driver side fuel tank (3) 1950 CCA batteries 320 alternator ember separator and AC. | 104968 |
| 1005-0483 | International 7600 (2) door 242" WB front tow hooks 20K & 46K tandem axle with ESC Officer side vertical exhaust with pipe guard ABS brakes 50 gal driver side fuel tank (3) 1950 CCA batteries 320 alternator ember separator and AC. | 138295 |
| 1005-0484 | International 7600 (2) door 258" WB front tow hooks 20K & 46K tandem axle with ESC Officer side vertical exhaust with pipe guard ABS brakes 50 gal driver side fuel tank (3) 1950 CCA batteries 320 alternator ember separator and AC. | 138295 |
| 1005-0486 | International 7400 (2) door 242" WB front tow hooks 18K & 40K tandem axle with ESC Officer side vertical exhaust with pipe guard ABS brakes 50 gal driver side fuel tank (3) 2100 CCA batteries 320 alternator ember separator and AC. | 12998 |
| 1005-0572 | International 7600 (2) door 258" WB front tow hooks 20K & 46K tandem axle with ESC Officer side vertical exhaust with pipe guard ABS brakes 50 gal driver side fuel tank (3) batteries 2100 CCA total 320 alternator ember separator and AC. | 141784 |
| 1005-0579 | Freightliner M2 112 (2) door 244" WB DD 13 410HP engine with Jacobs compression brake and EVS4000 transmission dual air horns with (2) foot switches and dash button controls front tow hooks 20K & 40K tandem axle with ESC aluminum wheels 1500 sq inch radiator Officer side vertical exhaust ABS brakes 50 gal driver side fuel tank 6 gal diesel exhaust fluid tank (3) 3375 CCA total batteries 275 alternator ember separator AM/FM radio with WB/CD and Speakers and AC. | 149501 |
| 1005-0581 | International 4400 (2) door 221" WB front tow hooks 14.6K & 30K axles with ESC Officer side vertical exhaust with pipe guard ABS brakes 50 gal driver side fuel tank (3) 1950 CCA batteries 320 alternator ember separator and AC. | 94876 |
| 1005-0582 | International 7400 (2) door 242" WB front tow hooks 18K & 40K tandem axle with ESC Officer side vertical exhaust with pipe guard ABS brakes 50 gal driver side fuel tank (3) 2100 CCA batteries 320 alternator ember separator and AC. | 107020 |
| 1005-0584 | Kenworth T800 (2) door 277" WB ISX15 500HP engine with compression brake front tow hooks 20K & 46K tandem axle with ESP aluminum wheels 1440 sq inch radiator Dual vertical exhaust with chrome air breathers ABS brakes 60 gal driver side fuel tank 11 gal diesel exhaust fluid tank (3) 2100 CCA total batteries 270 alternator ember separatorand AC. | 150550 |
| 1005-0660 | Freightliner 114SD (2) door 260 inch WB DD13 450HP engine with Jacobs compression brake and EVS4000 transmission stuttertone hood mntd airhorns with (2) foot switches front tow hooks 20K & 40K tandem axle Alcoa alum wheels 1500 sq inch radiator Officer side vertical exhaust ABS with ESC brake system 50 gal driver side fuel tank 6 gal diesel exhaust fluid tank (3) 3375 CCA total batteries 320 amp alternator ember separator Air Conditioning. | 138789 |
| 1005-0662 | Freightliner 114SD (2) door 260 inch WB DD13 450HP engine with Jacobs compression brake and EVS4000 transmission stuttertone hood mntd airhorns with (2) foot switches front tow hooks 20K & 40K tandem axle Alcoa alum wheels 1500 sq inch radiator Officer side vertical exhaust ABS with ESC brake system 50 gal driver side fuel tank 6 gal diesel exhaust fluid tank (3) 3375 CCA total batteries 320 amp alternator ember separator Air Conditioning. | 138250 |

| Item No. | Description | |
|---|---|---|
| 1005-0664 | Kenworth T440 (2) door 244" WB Paccar PX-9 380 HP engine with compression brake front tow hooks 18K & 40K tandem axle with ESP and interaxle diff lock with posi trac on both tandem axles Onspot tire chains on forward tandem axle aluminum wheels 1300 sq inch radiator Single vertical exhaust RH back of cab ABS brakes 60 gal driver side fuel tank 11 gal diesel exhaust fluid tank (3) 2100 CCA total batteries located in box RH side 53 inches behind cab 320 amp alternator ember separatorand AC. | 133921 |
| 1005-0697 | International 7400 (2) door 215" WB front tow hooks 14K & 26K axles with ESC Officer side vertical exhaust with pipe guard ABS brakes 50 gal driver side fuel tank (3) 1950 CCA batteries 320 alternator ember separator and AC. | 95327 |
| 1005-0698 | International 7400 (2) door 232" WB front tow hooks 14K & 26K axles with ESC Officer side vertical exhaust with pipe guard ABS brakes 50 gal driver side fuel tank (3) 1950 CCA batteries 320 alternator ember separator and AC. | 95327 |
| 1005-0699 | International 7400 (2) door 221" WB front tow hooks 14K & 30K axles with ESC Officer side vertical exhaust with pipe guard ABS brakes 50 gal driver side fuel tank (3) 1950 CCA batteries 320 alternator ember separator and AC. | 96719 |
| 1005-0700 | International 7400 (2) door 242" WB front tow hooks 18K & 40K tandem axle with ESC Officer side vertical exhaust with pipe guard ABS brakes 50 gal driver side fuel tank (3) 1950 CCA batteries 320 alternator ember separator and AC. | 103272 |
| 1005-0701 | International 7400 (2) door 258" WB front tow hooks 18K & 40K tandem axle with ESC Officer side vertical exhaust with pipe guard ABS brakes 50 gal driver side fuel tank (3) 1950 CCA batteries 320 alternator ember separator and AC. | 103272 |
| 1005-0702 | International 7400 (2) door 242" WB front tow hooks 18K & 46K tandem axle with ESC Officer side vertical exhaust with pipe guard ABS brakes 50 gal driver side fuel tank (3) 1950 CCA batteries 320 alternator ember separator and AC. | 106206 |
| 1005-0703 | International 7400 (2) door 258" WB front tow hooks 18K & 46K tandem axle with ESC Officer side vertical exhaust with pipe guard ABS brakes 50 gal driver side fuel tank (3) 1950 CCA batteries 320 alternator ember separator and AC. | 106206 |
| 1005-0704 | International 7600 (2) door 242" WB front tow hooks 20K & 46K tandem axle with ESC Officer side vertical exhaust with pipe guard ABS brakes 50 gal driver side fuel tank (3) 1950 CCA batteries 320 alternator ember separator and AC. | 133662 |
| 1005-0705 | International 7600 (2) door 258" WB front tow hooks 20K & 46K tandem axle with ESC Officer side vertical exhaust with pipe guard ABS brakes 50 gal driver side fuel tank (3) 1950 CCA batteries 320 alternator ember separator and AC. | 134006 |
| 1005-0706 | International 7400 (2) door 246" WB front tow hooks 18K & 40K tandem axle with ESC Officer side vertical exhaust with pipe guard ABS brakes 50 gal driver side fuel tank (3) 1950 CCA batteries 320 alternator ember separator and AC. For use with heated valve collars. | 103623 |
| 1005-0733 | International 7400 (2) door Navistar N10 350hp SCR engine 246" WB front tow hooks 18K & 40K tandem axle with ESC Officer side vertical exhaust with pipe guard with switchback aftertreatment ABS brakes 50 gal driver side fuel tank 5 gal DEF tank driver side (3) 1950 CCA batteries 320 alternator ember separator and AC. (2) hood mounted air horns with driver side foot switch only officer side speedometer On-Spot chains. The driver shall have a Seats Inc. Universal Series 911 NFPA compliant air suspension high back vinyl with covered back and International logo on head rest the officer shall have a Seats Inc. Universal Series 911 non suspension high back for SCBA vinyl with covered back adjusters 0 degree backangle and International logo on head rest. See chassis spec in 139855 folder. | 115282 |
| 1005-0734 | International 7400 (2) door 246" WB front tow hooks 18K & 40K tandem axle with ESC Officer side vertical exhaust with pipe guard ABS brakes 50 gal driver side fuel tank (3) 1950 CCA batteries 320 alternator ember separator and AC. | 103272 |
| 1005-0735 | International 7400 (2) door 246" WB front tow hooks 18K & 40K tandem axle with ESC Officer side vertical exhaust with pipe guard ABS brakes 50 gal driver side fuel tank (3) 1950 CCA batteries 320 alternator ember separator and AC. | 101113 |
| 1005-0736 | International 7400 (2) door 246" WB front tow hooks 18K & 46K tandem axle with ESC Officer side vertical exhaust with pipe guard ABS brakes 50 gal driver side fuel tank (3) 1950 CCA batteries 320 alternator ember separator and AC. | 106206 |
| 1005-0737 | International 7600 (2) door 246" WB front tow hooks 20K & 46K tandem axle with ESC Officer side vertical exhaust with pipe guard ABS brakes 50 gal driver side fuel tank (3) 1950 CCA batteries 320 alternator ember separator and AC. | 133662 |
| 1005-0739 | Freightliner 114SD (2) door with job color painted wind shield external visor 258 inch WB ISL 450HP engine with Jacobs compression brake and EVS3000 transmission dual hood mounted air horns with (2) foot switches front tow hooks 18K & 40K tandem axle Aluminum Alcoa wheels 1300 sq inch radiator Officer side vertical exhaust ABS with ESC brake system 50 gal driver side fuel tank 6 gal diesel exhaust fluid tank (3) 3375 CCA total batteries 320 amp alternator ember separator Air Conditioning. | 129360 |

| Item No. | Description | |
|---|---|---|
| 1005-0759 | International 4400 (2) door 217 in. WB front tow hooks 14K & 26K axles with ESC Officer side vertical exhaust with pipe guard ABS brakes 50 gal driver side fuel tank (3) 1950 CCA batteries 320 alternator ember separator and AC Aluminum rims. OEM Bumper mounted hadley air horns with DS/OS foot switches National seat upgrade package for driver and officer air suspension seating. AM/FM CD WB radio and speakers. | 97874 |
| 1025-0082 | Driver Controlled Dif Lock. For use with International chassis with 26K rear axle. | 840 |
| 1025-0083 | Driver Controlled Dif Lock. For use with International chassis with 30K rear axle. | 971 |
| 1025-0084 | Driver Controlled Dif Lock (Rearward rear axle). For use with International chassis with 40K tandem rear axle. | 940 |
| 1025-0085 | Driver Controlled Dif Lock (Rearward rear axle). For use with International chassis with 46K tandem rear axle. | 734 |
| 1050-0051 | International chassis rims aluminum. For use with single rear axle. | 1640 |
| 1050-0053 | International chassis rims aluminum. For use with tandem rear axle. | 2279 |
| 1050-0073 | Wheel trim package. For use with steel or aluminum wheels. | 576 |
| 1050-0080 | Trim Kit Lug nut covers for front and rear axle wheels. Includes lug nut covers only (chrome plated plastic if applicable) | 238 |
| 1060-0117 | RWC AirGuard LED tire pressure monitoring valve stem caps (6) for single rear axle applications. | 220 |
| 1060-0119 | RWC AirGuard LED tire pressure monitoring valve stem caps (10) for tandem rear axle applications. | 350 |
| 1060-0123 | RWC AirGuard LED tire pressure monitoring valve stem caps (2) front only. For use with rear axle Crossfire equalization systems. | 89 |
| 1110-0000 | Inlet for air system. Location: [#LOC]. | 473 |
| 1110-0118 | Inlet for air system. Includes weather proof box and Hubbel [#COL] cover. Location: [#LOC]. | 603 |
| 1110-0119 | Isolated air tank. Includes pressure protection valve. International chassis only. | 117 |
| 1110-0141 | Air inlet shut-off valve. Located adjacent to air inlet. | 139 |
| 1110-0144 | Air outlet shut-off valve. Located adjacent to air outlet. | 139 |
| 1160-0083 | 24" Bumper extension with 1/8" diamond plate gravel shield 10" front stainless steel bumper with location for NFPA speaker and dual Hadley air horns with driver and officer foot switch controls. | 4027 |
| 1160-0107 | 10" Stainless steel front bumper with driver side cut-out for NFPA speaker. Includes frame mounted painted tow hooks 20" bumper extension (1/8" diamond plate) with center-mounted hose storage tray with red vinyl cover. | 3750 |
| 1200-0123 | Engine block heater. Locate receptacle below the driver side cab door. | 238 |
| 1200-0254 | International N10 350 HP engine SCR with EVS3000 transmission. Includes Diamond Logix Exhaust Brake. | 4204 |
| 1200-0268 | International Maxx Force 350 HP engine with EVS3000 transmission. Includes Diamond Logix Engine Compression Brake. | 3829 |
| 1200-0269 | T handle transmission selector for International chassis only. | 369 |
| 1200-0290 | International Navistar N10 SCR 350hp@2200 RPM/1150ftlbs torque@1200 RPM 2200 RPM GOV in place of standard engine. | 4204 |
| 1225-0040 | Vertical exhaust to have: TAIL PIPE (1) turnback type Bright for single exhaust and Muffler/Tail Pipe Guard (1) Bright Stainless Steel. International 7400 chassis. | 372 |
| 1510-0141 | Seating Package Two (2) Door International. Includes One (1) National Brand air suspended driver seat and (1) National Brand air suspended officer seat. | 425 |
| 1510-0193 | Seating Package Two (2) Door International. Includes one (1) 911 hi-back air ride suspension driver seat and one (1) 911 hi-back fixed SCBA officer seat. | 552 |
| 1510-0198 | Seating Package Two (2) Door International. Includes One (1) National Brand air suspended driver seat and (1) National Brand fixed officer seat. | 491 |
| 1510-0208 | Seating Package Two (2) Door Freightliner. Includes One (1) 911 Universal brand high back air suspended driver seat and (1) 911 Universal brand fixed officer seat. NFPA compliant seat sensors and wiring included in seats. | 425 |
| 1510-0218 | Seating Package Two (2) Door International. Includes One (1) 911 air ride driver seat and (1) 911 non-suspended SCBA officer seat. | 1680 |
| 1510-0236 | Seating Package Two (2) Door Freightliner. Includes One (1) 911 Universal brand high back air suspended driver seat and (1) 911 Universal brand high back air suspended officer seat. NFPA compliant seat sensors and wiring included in seats. | 425 |
| 1510-0271 | Seating Package Two (2) Door International. Includes One (1) National Brand air suspended driver seat and (1) National Brand standard suspension officer seat. | 161 |
| 1535-0113 | (2) Cabinets rear of commercial extended cab. Sized in height width and depth as space within cab permits while allowing for installation requirements for a commercial chassis. Each cabinet to include (1) LED strip light mounted as applicable. Cabinets to be bolt-in and have zolatone grey interior and exterior finish. | 4186 |
| 1640-0010 | Diamond plate trim package for a (2) door International 4400. Includes driver and officer step trim that will utilize pieces already supplied by the OEM. | 1582 |

| Item No. | Description | |
|---|---|---|
| 1640-0011 | Diamond plate trim package for a (2) door International 7400 or 7600. Includes driver and officer step trim that will utilize pieces already supplied by the OEM. | 1582 |
| 1640-0017 | Diamond plate trim package for a (2) door extended International 7500. Includes driver side and an officer side trim and stepping areas that will utilize pieces already supplied by the OEM. The rearward area below the extended cab will be formed diamond plate with support framing. | 2917 |
| 1640-0020 | Diamond plate trim package for a (2) door Freightliner M2 106/112. Includes driver and officer step trim that will utilize pieces already supplied by the OEM. | 1582 |
| 1640-0027 | Diamond plate trim package for a (2) door Freightliner 114SD. Includes driver and officer step trim that will utilize pieces already supplied by the OEM. | 2219 |
| 1640-0033 | Diamond plate trim package for a (2) door Freightliner 112/114SD. Includes driver and officer step trim that will utilize pieces already supplied by the OEM. For use with Hyd drive pump systems includes extended lower steps and brackets supports for service and access to hydraulic reservoir. | 2841 |
| 1670-0049 | Pair of hood mounted Lang Mekra convex mirrors (heated with black finish). International chassis only. | 401 |
| 1675-0155 | Painted visor for International 4400 cab. Option 16XWD. | 246 |
| 1675-0172 | Aerodynamic painted roof color for International 4400 cab; Includes integral clearance/marker lights.Option 0016XWD (Tradition ES). | 195 |
| 1680-0138 | Cab step area trim plates provided on the driver and officer side. | 238 |
| 1680-0139 | Cab step area trim plates provided on the driver and officer side. | 238 |
| 1680-0140 | Cab step area trim plates provided on the driver and officer side. | 238 |
| 1680-0142 | Two (2) hood-mountedl Hadley air horns with driver and officer mounted foot switches. International. | 996 |
| 1680-0185 | RUDD (Rotogrip) 18 strand automatic tire chains. Includes switch in cab. | 3839 |
| 1680-0205 | Cab windows and locks to be power operated. Two (2) door International. | 681 |
| 1680-0240 | AM/FM stereo with weatherband clock auxiliary input includes multiple speakers International/ Water Master. | 336 |
| 1680-0296 | Chassis Trim Package for a (2) door Kenworth T440. | 1646 |
| 1680-0309 | Muncie digital tachometer. Locate display in cab visible to driver. | 851 |
| 1680-0342 | International 2016 On Board Diagnostics (OBD) surcharge - all models. | 410 |
| 1685-0144 | Cab gauge cluster with metric dominant. | 360 |
| 1685-0191 | Diamond plate cover for battery charger/air compressor. Includes louvers for ventilation. | 278 |
| 1685-0310 | Main control console with zolatone grey finish. Locate in cab centered between driver and officer. Includes NFPA in-cab controls/switching. | 746 |
| 1685-0372 | Map pocket rear cab console aluminum plate to match console finish. | 130 |
| 1750-0202 | Kussmaul battery charger with air compressor and air inlet. The battery charger receptacle and air inlet to include auto-eject. Locate to driver side below the driver door. | 1159 |
| 1750-0224 | Engine Compartment Light LED for Freightliner Chassis (EA). | 298 |
| 1750-0225 | Engine Compartment Light for Freightliner Chassis (EA). | 159 |
| 1750-0233 | Customer supplied radio and antennas to be installed by Tri-Co Communicaitons. | 993 |
| 1750-0272 | Kussmaul battery charger with air compressor and air inlet. The battery charger receptacle and air inlet to include auto-eject. Locate to driver side body above vacuum pump access. | 2205 |
| 1750-0273 | Kussmaul battery charger. The battery charger receptacle and air inlet to include auto-eject. Locate to driver side body above vacuum pump access. No compressor required with charger | 1399 |
| 1750-0282 | Auto-Eject receptacle inlet 20 amp located below the driver's door with a red cover. Receptical to be wired to heaters on tank inlet / out collars. WaterMaster only. | 703 |
| 1750-0443 | Dome Lts Red/White Whelen model 60CREGCS LED. Package includes two lights mounted in the front of the cab. White light wired through door and light assembly switch. Red light through light assembly switch. | 682 |
| 1750-0444 | Battery charger Iota model DLS-45 45 amp. | 727 |
| **WATERMASTER BODY** | | |
| 3080-0083 | Single axle body with 2500 gallon tank. Includes driver side forward body access to vacuum pump compartments L1/R1 with satin roll-up doors with header driver and officer side compartment top storage areas (driver side includes double hose restraints) and rear body/bumper trim. | 3069 |
| 3080-0084 | Tandem axle body with 3000 gallon tank. Includes driver side forward body access to vacuum pump compartments L1/R1 with satin roll-up doors with header driver and officer side compartment top storage areas (driver side includes double hose restraints) and rear body/bumper trim. | 6924 |
| 3080-0085 | Tandem axle body with 3500 gallon tank. Includes driver side forward body access to vacuum pump compartments L1/R1 with satin roll-up doors with header driver and officer side compartment top storage areas (driver side includes double hose restraints) and rear body/bumper trim. | 9981 |

| Item No. | Description | |
|---|---|---|
| 3080-0086 | Tandem axle body with 4000 gallon tank. Includes driver side forward body access to vacuum pump compartments L1/R1 with satin roll-up doors with header driver and officer side compartment top storage areas (driver side includes double hose restraints) and rear body/bumper trim. | 13035 |
| 3080-0092 | Single axle body with 2500 gallon tank (with auxiliary rear tank fill). Includes driver side forward body access to vacuum pump compartments L1/R1 with satin roll-up doors with header driver and officer side compartment top storage areas (driver side includes double hose restraints) and rear body/bumper trim. | 3069 |
| 3080-0093 | Tandem axle body with 3000 gallon tank (with auxiliary rear tank fill). Includes driver side forward body access to vacuum pump compartments L1/R1 with satin roll-up doors with header driver and officer side compartment top storage areas (driver side includes double hose restraints) and rear body/bumper trim. | 6924 |
| 3080-0094 | Tandem axle body with 3500 gallon tank (with auxiliary rear tank fill). Includes driver side forward body access to vacuum pump compartments L1/R1 with satin roll-up doors with header driver and officer side compartment top storage areas (driver side includes double hose restraints) and rear body/bumper trim. | 9615 |
| 3080-0095 | Tandem axle body with 4000 gallon tank (with auxiliary rear tank fill). Includes driver side forward body access to vacuum pump compartments L1/R1 with satin roll-up doors with header driver and officer side compartment top storage areas (driver side includes double hose restraints) and rear body/bumper trim. | 13035 |
| 3080-0153 | Tandem axle body with 2500 gallon tank (with auxiliary rear tank fill). Includes driver side forward body access to vacuum pump compartments L1/R1 with satin roll-up doors with header driver and officer side compartment top storage areas (driver side includes double hose restraints) and rear body/bumper trim. | 6924 |
| 3080-0205 | Reinforcement pads welded to the Water Master aluminum tank by Brenner Tank for mounting of ladder support and brackets. | 509 |
| 3080-0206 | Weld the ladder bracket support to the pads on the driver side on the Water Master tank (by E_ONE). | 693 |
| 3080-0209 | Single axle body with 2000 gallon tank (with auxiliary rear tank fill). Includes driver side forward body access to vacuum pump compartments L1/R1 with satin roll-up doors with header driver and officer side compartment top storage areas (driver side includes double hose restraints) and rear body/bumper trim. | 408 |
| 3080-0210 | Single axle body with 2500 gallon tank (with auxiliary rear tank fill). Includes driver side forward body access to vacuum pump compartments L1/R1 with satin roll-up doors with header driver and officer side compartment top storage areas (driver side includes double hose restraints) and rear body/bumper trim. | 3475 |
| 3080-0211 | Tandem axle body with 3000 gallon tank (with auxiliary rear tank fill). Includes driver side forward body access to vacuum pump compartments L1/R1 with satin roll-up doors with header driver and officer side compartment top storage areas (driver side includes double hose restraints) and rear body/bumper trim. | 7330 |
| 3080-0212 | Tandem axle body with 3500 gallon tank (with auxiliary rear tank fill). Includes driver side forward body access to vacuum pump compartments L1/R1 with satin roll-up doors with header driver and officer side compartment top storage areas (driver side includes double hose restraints) and rear body/bumper trim. | 10021 |
| 3080-0213 | Tandem axle body with 4000 gallon tank (with auxiliary rear tank fill). Includes driver side forward body access to vacuum pump compartments L1/R1 with satin roll-up doors with header driver and officer side compartment top storage areas (driver side includes double hose restraints) and rear body/bumper trim. | 13442 |
| 3080-0214 | Anodes for water tank - (3) anodes located in bottom of water tank. | 613 |
| 3130-0263 | Side mount pump module. Includes upper area for double stacked double preconnects with area for dead lay of hose. Side panels to be stainless steel and backside of module to have diamond plate trim. Includes red crosslay cover with mechanical hold downs and quick release side flaps. | 1213 |
| 3130-0446 | Side mount pump module. Includes upper area for double stacked double preconnects with area for dead lay of hose. Side panels to be stainless steel and backside of module to have diamond plate trim. | 1212 |
| 3130-0585 | Side mount pump module. Includes upper area for double stacked double preconnects with area for dead lay of hose. Side panels to be stainless steel and backside of module to have diamond plate trim. | 1268 |
| 3136-0082 | Two (2) pump compartment heaters are to be mounted in the pump area. Locate as low as possible.The lower area of the pump compartment to have a four (4) sided heat pan with removable bottoms. Extreme weather heat pan plates. Includes interior module area mounted plates for increasing the lower heat pan (forward and rearward) into the lower area of the module for increased heat retaining. | 4709 |
| 3320-0026 | (2) SCBA Storage. Located (1) each side and rearward of the rear axle. | 735 |
| 3320-0035 | SCBA Bottle storage - behind the cab qty of (4) | 735 |

| Item No. | Description | |
|---|---|---|
| 3320-0036 | (4) SCBA Storage. Located (2) each side rearward of the rear axle in the body skirting. | 1495 |
| 3320-0037 | (4) SCBA Storage. Located (2) each side- (1) forward and (1) rearward of the rear axle in the body skirting. | 1495 |
| 3320-0048 | (4) SCBA Storage. Located (2) each side in wheel well - (1) forward and (1) rearward of the rear axle. | 1570 |
| 3330-0117 | Frame mounted stirrup style step with gator grip offset to forward area of pump module one each side. Requires relocating oil catch muffler. | 1617 |
| 3330-0140 | Driver side rear flop down step (24" wide). Includes driver side step area only gator grip overlay (1) 18" handrail vertically mounted on rear inboard side of hard suction storage box and (1) 12" mounted horizontally on rear of driver side compartment top storage. Step to be stored in the up/pinned position when not in use. | 790 |
| 3340-0325 | (PR) NFPA compliant wheel chocks. Locate (1) each side rearward of the rear axle. | 881 |
| 3340-0326 | Storage compartment driver side compartment top. Locate to forward area. Includes roll-up door (wired to door ajar) with header and (1) interior strip light. | 2432 |
| 3340-0377 | Storage compartment driver side compartment top. Locate to forward area. Includes roll-up door (wired to door ajar) with header and (1) interior strip light. For use with 2000 Gallon Tank. | 2432 |
| 3340-0378 | Storage compartment driver side compartment top. Locate to forward area. Includes roll-up door (wired to door ajar) with header and (1) interior strip light. For use with 2500 Gallon Tank. | 2432 |
| 3340-0379 | Storage compartment driver side compartment top. Locate to forward area. Includes roll-up door (wired to door ajar) with header and (1) interior strip light. For use with 3000 Gallon Tank. | 2432 |
| 3340-0380 | Storage compartment driver side compartment top. Locate to forward area. Includes roll-up door (wired to door ajar) with header and (1) interior strip light. For use with 3500 Gallon Tank. | 2432 |
| 3340-0381 | Storage compartment driver side compartment top. Locate to forward area. Includes roll-up door (wired to door ajar) with header and (1) interior strip light. For use with 4000 Gallon Tank. | 2432 |
| 3340-0402 | Water Master wheel well to have E-One style trim. For use with tandem axle only. | 1034 |
| 3340-0410 | Water Master Body Pump Module and Cab Tags in French to replace standard English E-One supplied Tags. | 1921 |
| 3340-0466 | Turtle Tile Brand Red Floor Matting covering all applicable Compartment Floors Shelves and Rollout Trays. | 846 |
| 3340-0468 | Storage compartment driver side compartment top with extended length (58" opening with roll-up door open). Locate to forward area. Includes roll-up door (wired to door ajar) with header and (1) interior strip light. For use with 3500 Gallon Tank. | 2702 |
| 3340-0469 | Driver side upper body storage area to have black dri-deck installed and run full length and width as applicable. Area to be for storage of two (2) lays of 5" LDH hose (500' total). Includes bolt-in plate at rear to square off back of storage area and three (3) NFPA retaining straps (sized to wrap up from floor and over hoses with adjustablity for hose stacking). Hose to be deployable from the rear with rear body and bolt-in plate notched to provide rear opening. A red vinyl drop down flap shall be provided with quarter turn upper latching. | 1069 |
| 3340-0515 | Driver side upper body storage area to have black dri-deck installed and run full length and width as applicable. Area to be for storage of 400' 0f 2.5" DJ hose. Includes bolt-in plate at rear to square off back of storage area and three (3) NFPA retaining straps (sized to wrap up from floor and over hoses with adjustablity for hose stacking). Hose to be deployable from the side of the body. | 1069 |
| 3340-0598 | Driver side upper body storage area to have black dri-deck installed and run full length and width as applicable. Area to be for storage of 200' 0f 3" DJ hose. Includes welded plate at rear to square off back of storage area and three (3) NFPA retaining straps (sized to wrap up from floor and over hoses with adjustablity for hose stacking). Hose to be deployable from the rear of the body. A black vinyl drop down flap shall be provided with quarter turn upper latching. | 1069 |
| 3340-0843 | Storage compartment driver side compartment top with extended length (42" W x 34 tall opening with roll up door added). Locate to forward area. Includes roll-up door (wired to door ajar) with header and (1) interior strip light. For use with 3500 Gallon Tank. | 2702 |
| 3340-0844 | Storage compartment officer side compartment top with extended length (42" W x 34 tall opening with roll up door added). Locate to forward area. Includes roll-up door (wired to door ajar) with header and (1) interior strip light. For use with 3500 Gallon Tank. | 2702 |
| 3340-0845 | Driver and officer side upper body storage area to have a rearward deployment notch with vinyl cover with twist button latches to match color as selected for other areas of apparatus. A strap shall be provided each side rearward within reach form the rear of the apparatus to secure equipment. Area both sides to be for storage of (2) 6 in. x 10' diameter hard suction hoses. For use with dual folding tank body racks mounted to body sides which further captivate stored hard tubes. | 1092 |
| 3340-1135 | Double hose restraints to be located on the officer side Water Master body to match those provided with the body on the driver side to utilize both compartment top storage areas for hose as required to meet departments needs. Water Master only. | 193 |
| 3365-0151 | OBSOLETE - USE HYDRAULIC - Zico electric drop down rack on officer body. Secures portable folding tank with capacity of main tank on body. | 7539 |

| Item No. | Description | |
|---|---|---|
| 3365-0152 | Diamond plate portable folding tank cover. For use with 2000 tank and Zico drop down rack. | 875 |
| 3365-0153 | Diamond plate portable folding tank cover. For use with 2500 tank and Zico drop down rack. | 875 |
| 3365-0154 | (2) Zico quic-mount brackets (1 brackets supports 2 poles) with rubber pull-over hold-downs. Locate in driver side compartment top storage outboard. Position for use with (2) 6' pike poles. | 239 |
| 3365-0157 | Diamond plate portable folding tank cover. For use with 3000 tank and Zico drop down rack. | 875 |
| 3365-0158 | Diamond plate portable folding tank cover. For use with 3500 tank and Zico drop down rack. | 875 |
| 3365-0159 | Diamond plate portable folding tank cover. For use with 4000 tank and Zico drop down rack. | 875 |
| 3365-0160 | Manually operated drop down rack on driver body. Secures portable folding tank with capacity of main tank on body. | 1025 |
| 3365-0161 | OBSOLETE - USE HYDRAULIC - Zico electric drop down rack on driver body. Secures portable folding tank with capacity of main tank on body. | 7689 |
| 3365-0169 | Triple hardsuction storage with NFPA compliant restraints. Locate driver side of tank with fixed mounted brackets. Trays to formed diamond plate (diamonds out) and sized to hold 6" x 15' hardsuction hose. | 1818 |
| 3365-0201 | Manual operated drop down rack on driver. To secure a 2500 portable folding tank IPO capacity of main tank on body. Includes rearward mounted tank stop (2500 gallon portable tank to stored offset forward in rack). | 1429 |
| 3365-0204 | Zico electric drop down ladder rack on officer body. | 6250 |
| 3365-0205 | Driver side hardsuction storage racks for (2) 18' hardsuction hoses. Each rack to be mounted to tank ribs and includes NFPA retaining straps. | 1377 |
| 3365-0207 | Diamond plate box for storage of (3) 10' hard suction hoses (hoses not included). Box to be mounted off driver side of tank (tank rib mounts) and is to include rear access door with push-button latch. Door to be wired to door ajar indicator. | 2446 |
| 3365-0212 | (2) pike pole tubes with retaining pins. Locate driver side mounted to tank ribs. Tubes are for use with up to (2) 10' poles. | 344 |
| 3365-0213 | Manual operated drop down rack (PR) located (1) each side of body. Each capable of securing a 4000 gallon portable folding tank.Includes diamond plate cover along ends top and outward side with (2) 20" handrails mounted along the forward and rearward ends and (2) 12" handrails mounted along the top towards the ends of the cover. | 3099 |
| 3365-0224 | Double hardsuction storage with NFPA compliant restraints. Locate driver side of tank with fixed mounted brackets. Trays to formed diamond plate (diamonds out) and sized to hold (1) 6" x 16' and (1) 6" x 18' hardsuction hose. | 1213 |
| 3365-0235 | Diamond plate box for storage of (4) 16' hard suction hoses (hoses not included). Box to be mounted off driver side of tank (tank rib mounts) and is to include rear access door with push-button latch. Door to be wired to door ajar indicator. Position box to allow loading of lower body storage tray with hose from rear. | 2621 |
| 3365-0287 | Smooth plate portable folding tank cover painted job color. For use with 3000 tank and Zico drop down rack. | 1064 |
| 3365-0327 | Ladder brackets. Locate on welded brackets on the driver side of the Water master tank. | 669 |
| 3365-0341 | Ladder brackets. Locate on welded brackets on the driver side of the Water Master tank. Brackets shall be mounted so the bottom edge of stored ladder(s) are approximately 18" above the hose bed storage floor. | 669 |
| 3365-0369 | Zico hydraulic drop down rack on officer body. Secures portable folding tank with capacity of main tank on body. | 7539 |
| 3365-0370 | Zico hydraulic drop down rack on driver body. Secures portable folding tank with capacity of main tank on body. | 7689 |
| 3365-0432 | Zico hydraulic drop down rack on driver body. Secures portable folding tank with capacity of main tank on body. | 7689 |
| 3365-0433 | Zico hydraulic drop down rack on officer body. Secures portable folding tank with capacity of main tank on body. | 7539 |
| 3365-0494 | Zico electric drop down hardsuction rack. Rack located to driver of body. The control switching to be located on the side pump panel with the rack being in full view of the operator during operations. The rack includes (2) main rack mounted 12' trays. | 7843 |
| 3365-0582 | Smooth plate portable folding tank cover. Cover to be painted job color. For use with 4000 tank and Zico drop down rack. | 1338 |
| 3365-0583 | Zico hydraulic drop down rack on driver body. Secures portable folding tank with 4000 gallon capacity on 3500 gallon tank on apparatus. | 7539 |
| 3365-0584 | Zico hydraulic drop down rack on officer body. Secures portable folding tank with 4000 gallon capacity on 3500 gallon tank on apparatus. | 7539 |
| 3370-0113 | Tracks for adjustable shelf and/or tray. Location: Driver side forward body compartment. | 121 |
| 3370-0114 | Tracks for adjustable shelf and/or tray. Location: Officer side forward body compartment. | 121 |
| 3380-0124 | Floor mounted roll-out tray with 500lbs capacity. Mount on L1 and R1 floor. | 832 |
| 3380-0135 | Roll-out tray. Mount on driver side forward body compartment floor. | 832 |
| 3380-0136 | Roll-out tray. Mount on officer side forward body compartment floor. | 832 |
| 3380-0137 | Adjustable roll-out tray. Mount in driver side forward body compartment. | 1195 |

| Item No. | Description | |
|---|---|---|
| 3380-0138 | Adjustable roll-out tray. Mount in officer side forward body compartment. | 1195 |
| **PUMP AND PLUMBING** | | |
| 4005-0065 | PM100 Vacuum Pump (for use with AP or MBP pumps only). Includes primary and secondary shut offs (4) water level gauges- (3) body and (1) cab and the (3) inlets/outlets with switching. | 3467 |
| 4005-0084 | PM100 Vacuum Pump (for use with DSD pump only). Includes primary and secondary shut offs (4) water level gauges- (3) body and (1) cab and the (3) inlets/outlets with switching. | 3467 |
| 4005-0088 | Hydraulically driven PM 100 vacuum pump and APH50 water pump. Hydraulic motor driven by PTO on driver side of EVS 4000 series transmission. 40 gallon hydraulic reservoir. Vacuum pump system includes primary and secondary shut-offs 4 water level gauges ? 3 body and 1 cab and the (3) inlets/outlets with switching. | 3467 |
| 4005-0097 | PM100 Vacuum Pump (for use with DSD pump only). Includes primary and secondary shut offs (4) water level gauges- (3) body and (1) cab and the (2) inlets/outlets officer's driver side and (1) 10" rear dump only with switching. | 8761 |
| 4005-0153 | PM100 Vacuum Pump (for use with APH or MBP pumps only). Includes primary and secondary shut offs (4) water level gauges- (3) body and (1) cab and the (3) inlets/outlets with switching. | 3466 |
| 4005-0161 | PM80 Vacuum Pump. Includes primary and secondary shut offs (4) water level gauges- (3) body and (1) cab and the (3) inlets/outlets with switching. | 893 |
| 4005-0162 | PM100 Vacuum Pump (for use with AP or MBP pumps only). Includes primary and secondary shut offs (4) water level gauges- (3) body and (1) cab and the (3) inlets/outlets with switching. | 4355 |
| 4005-0163 | PM100 Vacuum Pump (for use with DSD pump only). Includes primary and secondary shut offs (4) water level gauges- (3) body and (1) cab and the (3) inlets/outlets with switching. | 4355 |
| 4015-0096 | Engine cooler. For use with International 7600 chassis. | 3267 |
| 4015-0097 | Heated intake strips (4). Located (1) on each 6" tank intake and (1) 2.5" rear tank fill. | 2106 |
| 4015-0099 | Zinc Anodes for Hale Pump and tank - (Pair) (1) pump and (1) tank. | 798 |
| 4015-0143 | Pump&Roll kit WM. To include Digitial Master pressure gauge Switches and Preset discharge pressure relief valve controls in cab. Locate in cab center console. | 3146 |
| 4015-0151 | Indicator Light for valve position on the vacumn pump. | 1926 |
| 4015-0161 | Addition Heated intake strips (1). Located (1) on addition 2.5" direct tank fill. | 529 |
| 4015-0168 | Engine cooler. For use with International 4400 7400 and 7500 chassis. | 546 |
| 4015-0169 | Engine cooler. For use with International 7600 chassis. | 439 |
| 4015-0226 | Heated strips (2). Located (1) on each 2.5" rear tank fill. | 869 |
| 4015-0238 | Hale electric primer (oil-less). | 2686 |
| 4015-0239 | Waterous electric primer (oil-less). | 2746 |
| 4015-0241 | Trident primer W/2 barrel push button control. For use with up to 1000 GPM pumps. | 1890 |
| 4015-0242 | Trident primer W/3 barrel push button control. For use with 1250 GPM and larger pumps. Requires 16.5 CFM or large engine air compressor. | 2256 |
| 4020-0037 | Three (3) anodes located in main body water tank. | 1018 |
| 4100-0057 | 20 gallon external foam tank for [#LOC] locate: Officer side front of body. UPF Poly III [#COL] fill tower. A diamond plate cover will be provided around the foam tank. | 3701 |
| 4405-0057 | Booster Reel. Reel to have capacity of 200' of 1" (not included). Includes aluminum plate enclosure on lower frame mount and the upper diamond plate panel forward of R1 will be reduced in size for the reel to fit under that area easily accessible rewind switch rollers and air blow-out. Locate officer side lower forward body/pump area. | 4080 |
| 4405-0072 | Booster Reel. Reel to have capacity of 200' of 1" (Reeltex hose). Includes aluminum plate enclosure on lower frame mount and the upper diamond plate panel forward of R1 will be reduced in size for the reel to fit under that area easily accessible rewind switch rollers 200' of 1" reeltex hose and air blow-out. Locate officer side lower forward body/pump area. | 6089 |
| 4405-0079 | Booster Reel. Reel to have capacity of 200' of 1" (Reeltex hose). Includes aluminum plate enclosure on lower frame mount and the upper diamond plate panel forward of R1 will be reduced in size for the reel to fit under that area easily accessible rewind switch rollers 200' of 1" reeltex hose (4-50' sections) and air blow-out. Locate officer side lower forward body/pump area. | 6089 |
| 4405-0137 | Booster Reel. Reel to have capacity of 100' of 1" (not included). Locate under rear body (includes support brkts). Includes rewind switch. | 5287 |
| 4410-0014 | Plumbing kit with Hale AP50 (without officer side steamer) pump (500GPM). Includes (1) 2.5" Driver Side Discharge with droop and cap (1) 2.5" Officer Side Discharge with droop and cap and (2) 1.5" Crosslay Discharges. | 28349 |
| 4410-0016 | Plumbing kit with Hale AP50 (with officer side steamer) pump (500GPM). Includes (1) 2.5" Driver Side Discharge with droop and cap (1) 2.5" Officer Side Discharge with droop and cap and (2) 1.5" Crosslay Discharges. The discharges are to be labeled and color coded in compliance with current NFPA. | 30366 |
| 4410-0018 | Plumbing Kit with Hale MBP500 pump (500GPM). Includes (1) 2.5" Driver Side Discharge with droop and cap (1) 2.5" Officer Side Discharge with droop and cap and (2) 1.5" Crosslay Discharges. | 35644 |
| 4410-0019 | Plumbing Kit with Hale MBP500 NFPA pump (500GPM). Includes (1) 2.5" Driver Side Discharge with droop and cap (1) 2.5" Officer Side Discharge with droop and cap and (2) 2.5" Crosslay Discharges. The discharges are to be labeled and color coded in compliance with current NFPA. | 37661 |

| Item No. | Description | |
|---|---|---|
| 4410-0020 | Plumbing Kit with Hale MBP1000 pump (1000GPM). Includes (1) 2.5" Driver Side Discharge with droop and cap (1) 2.5" Officer Side Discharge with droop and cap and (2) 1.5" Crosslay Discharges. | 35644 |
| 4410-0021 | Plumbing Kit with Hale MBP1000 NFPA pump (1000GPM). Includes (1) 2.5" Driver Side Discharge with droop and cap (1) 2.5" Officer Side Discharge with droop and cap and (2) 2.5" Crosslay Discharges. The discharges are to be labeled and color coded in compliance with current NFPA. | 37661 |
| 4410-0022 | Plumbing kit with Hale APH50 (with officer side steamer) hydraulic driven pump. Includes (1) 2.5" Driver Side Discharge with droop and cap (1) 2.5" Officer Side Discharge with droop and cap and (2) 1.5" Crosslay Discharges. The discharges are to be labeled and color coded in compliance with current NFPA. | 6574 |
| 4410-0023 | Plumbing kit with Hale AP (with officer side steamer) pump rated for 2000 LPM. Includes (1) 2.5" Driver Side Discharge with droop and cap (1) 2.5" Officer Side Discharge with droop and cap and (2) 1.5" Crosslay Discharges. The discharges are to be labeled and color coded in compliance with current ULC. | 30366 |
| 4410-0024 | Plumbing Kit with Hale MBP pump with rating of 2000 LPM. Includes (1) 2.5" Driver Side Discharge with droop and cap (1) 2.5" Officer Side Discharge with droop and cap and (2) 2.5" Crosslay Discharges. The discharges are to be labeled and color coded in compliance with current ULC. | 37661 |
| 4410-0025 | Plumbing Kit with Hale MBP pump rated at 3000 LPM. Includes (1) 2.5" Driver Side Discharge with droop and cap (1) 2.5" Officer Side Discharge with droop and cap and (2) 1.5" Crosslay Discharges. The discharges are to be labeled and color coded in compliance with current ULC. | 37661 |
| 4410-0026 | Plumbing Kit for use with a Hale DSD (5000LPM) ULC pump. Includes (1) FRC In-Control display (1) 2.5" Driver Side Discharge with droop and cap (2) 2.5" Officer Side Discharges with droops and caps and (2) 2.5" Crosslay Discharges. The discharges are to be labeled and color coded in compliance with current NFPA. | 44957 |
| 4410-0034 | Plumbing Kit for use with a Hale DSD NFPA pump (750GPM). Includes (1) FRC In-Control display (1) 2.5" Driver Side Discharge with droop and cap (2) 2.5" Officer Side Discharges with droops and caps and (2) 2.5" Crosslay Discharges. The discharges are to be labeled and color coded in compliance with current NFPA. | 44957 |
| 4410-0035 | Plumbing kit with Hale AP50 (with officer side steamer) pump (500GPM). Includes (1) 2.5" Driver Side Discharge with cap (NO DROOP) (1) 2.5" Officer Side Discharge with cap (NO DROOP) and (1) 1.5" Crosslay Discharge (forward) and (1) 2.5" discharge (rearward) and a Hale TRVL-120 thremal relief valve. Pre-connect storage to be extra capacity (24" deep) with (1) lay of 1.75" DJ at 200' and (2) lays of 2.5" DJ at 200'. Pump intake to have 5" FNPT by 5" NST and a 6" Stortz adaptor with cap by 5" FNST threads (ship loose). The discharges are to be labeled and color coded in compliance with current NFPA. All discharges to have quater turn bleeder valves. | 35756 |
| 4410-0037 | Plumbing Kit for use with a Hale DSD NFPA pump (1250GPM). Includes (1) FRC In-Control display (1) 2.5" Driver Side Discharge with droop and cap (1) 2.5" Officer Side Discharges with droop and cap and (1) 4" Officer discharge with 3" valve and 4" Storz droops adapter and caps and (2) 2.5" Crosslay Discharges. The discharges are to be labeled and color coded in compliance with current NFPA. | 49933 |
| 4410-0039 | Plumbing kit with C.E.T. Pump. Includes (2) 1.5" Crosslay Discharges. | 17121 |
| 4410-0040 | Plumbing Kit for use with a Hale DSD (5000LPM) ULC pump. Includes (1) FRC In-Control display (1) 2.5" Driver Side Discharge with droop and cap (1) 2.5" Officer Side Discharges with droop and cap and (1) 4" Officer discharge with 3" valve and 4" Storz droops adapter and caps and (2) 2.5" Crosslay Discharges. The discharges are to be labeled and color coded in compliance with current NFPA. | 49933 |
| 4410-0044 | Plumbing Kit for use with a Hale DSD NFPA pump (1250GPM). Includes (1) FRC In-Control display (2) 2.5" Driver Side Discharge with droop and cap (1) 3" Officer Side Discharge with droop and cap and (2) 2.5" Crosslay Discharges. The discharges are to be labeled and color coded in compliance with current NFPA. | 50266 |
| 4410-0046 | Plumbing Kit for use with a Hale DSD NFPA pump (1250GPM). Includes (1) FRC In-Control display (1) 2.5" Driver Side Discharge with droop and cap (1) 2.5" Officer Side Discharge with droop and cap (1) 3" Officer Side Discharge with droop and cap and (2) 2.5" Crosslay Discharges. The discharges are to be labeled and color coded in compliance with current NFPA. | 50266 |
| 4410-0047 | Plumbing kit with Hale APH (with officer side steamer)hydraulic driven pump. Pump rated for 2000 LPM. Includes (1) 2.5" Driver Side Discharge with droop and cap (1) 2.5" Officer Side Discharge with droop and cap and (2) 1.5" Crosslay Discharges. The discharges are to be labeled and color coded in compliance with current ULC. | 38405 |
| 4410-0050 | Plumbing kit with Hale AP50 pump (500GPM). Includes (1) 2.5" Driver Side Discharge with droop and cap (1) 2.5" Officer Side Discharge with droop and cap and (2) 1.5" Crosslay Discharges. | 28755 |
| 4410-0051 | Plumbing Kit with Hale MBP500 pump (500GPM). Includes (1) 2.5" Driver Side Discharge with droop and cap (1) 2.5" Officer Side Discharge with droop and cap and (2) 1.5" Crosslay Discharges. | 36050 |
| 4410-0052 | Plumbing Kit with Hale MBP1000 pump (1000GPM). Includes (1) 2.5" Driver Side Discharge with droop and cap (1) 2.5" Officer Side Discharge with droop and cap and (2) 1.5" Crosslay Discharges. | 36050 |

| Item No. | Description | |
|---|---|---|
| 4410-0053 | Plumbing kit with Hale AP50 (with officer side steamer) pump (500GPM). Includes (1) 2.5" Driver Side Discharge with droop and cap (1) 2.5" Officer Side Discharge with droop and cap and (2) 1.5" Crosslay Discharges. The discharges are to be labeled and color coded in compliance with current NFPA. | 30773 |
| 4410-0054 | Plumbing Kit with Hale MBP500 NFPA pump (500GPM). Includes (1) 2.5" Driver Side Discharge with droop and cap (1) 2.5" Officer Side Discharge with droop and cap and (2) 2.5" Crosslay Discharges. The discharges are to be labeled and color coded in compliance with current NFPA. | 38067 |
| 4410-0055 | Plumbing Kit with Hale MBP1000 NFPA pump (1000GPM). Includes (1) 2.5" Driver Side Discharge with droop and cap (1) 2.5" Officer Side Discharge with droop and cap and (2) 2.5" Crosslay Discharges. The discharges are to be labeled and color coded in compliance with current NFPA. | 38067 |
| 4410-0056 | Plumbing Kit for use with a Hale DSD NFPA pump (1250GPM). Includes (1) FRC In-Control display (1) 2.5" Driver Side Discharge with droop and cap (2) 2.5" Officer Side Discharges with droops and caps and (2) 2.5" Crosslay Discharges. The discharges are to be labeled and color coded in compliance with current NFPA. | 45363 |
| 4410-0057 | Plumbing Kit with Hale AP pump rated at 2000 LPM. Includes (1) 2.5" Driver Side Discharge with droop and cap (1) 2.5" Officer Side Discharge with droop and cap and (2) 1.5" Crosslay Discharges. The discharges are to be labeled and color coded in compliance with current ULC. | 30773 |
| 4410-0058 | Plumbing Kit with Hale MBP pump rated at 3000 LPM. Includes (1) 2.5" Driver Side Discharge with droop and cap (1) 2.5" Officer Side Discharge with droop and cap and (2) 1.5" Crosslay Discharges. The discharges are to be labeled and color coded in compliance with current ULC. | 38067 |
| 4410-0059 | Plumbing Kit for use with a Hale DSD NFPA pump (1250GPM). Includes (1)CLASS 1 TPG Plus display (1) 2.5" Driver Side Discharge with droop and cap (2) 2.5" Officer Side Discharges with droops and caps and (2) 2.5" Crosslay Discharges. The discharges are to be labeled and color coded in compliance with current NFPA. | 44957 |
| 4410-0060 | Plumbing Kit with Hale MBP1000 NFPA pump (750GPM). Includes (1) 2.5" Driver Side Discharge with droop and cap (1) 2.5" Officer Side Discharge with droop and cap and (2) 2.5" Crosslay Discharges. The discharges are to be labeled and color coded in compliance with current NFPA. | 38067 |
| 4410-0063 | Plumbing kit with Hale APH (with officer side steamer)hydraulic driven pump. Pump rated for 500 GPM. Includes (1) 2.5" Driver Side Discharge with droop and cap (1) 2.5" Officer Side Discharge with droop and cap and (2) 1.5" Crosslay Discharges. The discharges are to be labeled and color coded in compliance with current NFPA. | 38405 |
| 4410-0064 | Plumbing Kit with Hale MBP1000 NFPA pump (1000GPM). Includes (1) 2.5" Driver Side Discharge with droop and cap (1) 3" Officer Side Discharge with droop and cap and (2) 2.5" Crosslay Discharges. The discharges are to be labeled and color coded in compliance with current NFPA. | 39272 |
| 4415-0664 | Front bumper 1.5" pre-connect with manual valve. Locate pre-connect in front bumper tray down low on rear wall. Includes air-blow out and bleeder valve. | 5386 |
| 4415-0717 | 1.5" front bumper discharge line. Includes air actuated Akron valve with switching located in cab on console. Discharge line to terminate just below driver side of bumper with male NPT threads (line is for use with dealer installed bumper turret. Dealer responsible for plumbing application and any additional length of line or connectors). Secure line as required and cap. Includes cab mounted pressure gauge and side panel bleeder and blow-out. | 2255 |
| 4415-0893 | Front bumper 1.5" pre-connect with manual valve and pressure gauge. Locate pre-connect in front bumper tray down low on rear wall. | 2525 |
| 4415-0894 | 2.5" officer forward hosebed/body tray pre-connect. Includes connection to 2.5" valve assembly pressure gauge and bleeder. Pre-connect to be positioned rearward of the forward Zico rack mount of the officer side hosebed/body tray. Hosebed/Body tray to include black dri-dek flooring for NFPA and a red vinyl hosebed cover (secure along the sides with awning strips and twist locks along the inboard side. The area inboard of the forward and rearward Zico rack mounts to have a bolt-in wall to square off the hose storage area. | 3889 |
| 4417-0093 | Akron FireFox remote control monitor. Located above pump area with joystick controller at cab console. For use with AP or MBP pumps. | 11837 |
| 4417-0094 | Akron FireFox remote control monitor. Located above pump area with joystick controller at cab console. For use with DSD pump. | 10907 |
| 4417-0095 | Monitor and Reel kit. Includes (1) Akron FireFox remote control monitor. Located above pump area with joystick controller at cab console and (1) Booster Reel with a capacity for 200' of 1" (not included). Includes aluminum plate enclosure with easily accessible rewind switch rollers and air blow-out. Locate officer side lower pump area. For use with AP or MBP pumps. | 14893 |
| 4417-0096 | Monitor and Reel kit. Includes (1) Akron FireFox remote control monitor. Located above pump area with joystick controller at cab console and (1) Booster Reel with a capacity for 200' of 1" (not included). Includes aluminum plate enclosure with easily accessible rewind switch rollers and air blow-out. Locate officer side lower pump area. For use with DSD pump. | 14893 |
| 4432-0144 | Foam ready Manifold for a Hale Foam Logix or a Foam Pro system- plumbed to Crosslay #1 Driver side 2.5" discharge Hose reel and (1) 2.5" outlet for dealer install bumper monitor. W/3" plumbing | 2691 |
| 4435-0145 | Additional discharge gauge(s). Includes english dominant reading. | 174 |

| Item No. | Description | |
|---|---|---|
| 4435-0146 | Additional discharge gauge(s). Includes metric dominant reading. | 178 |
| 4435-0238 | Addition Vacuum gauge located on driver side pump panel. | 607 |
| 4445-0047 | Bleeder/Drain .75 Valve Plumbed to each 6" inlet/outlet. | 220 |
| 4450-0154 | Manual Valve Overrides for the (3) 6" valves tank inlet/outlet valves in the event of an air pressure failure. | 1335 |
| 4450-0155 | 2.5" Tank Fill Akron Electric/air control Valve. | 2093 |
| 4450-0159 | Inlet/Outlet 6" Heated Collar. The heat collar will be install between the valve and tank flange. They are connected to the coolant system on the truck to circulate anti-freeze. Also a 110 volt heater and thermostat for freeze control when the truck is parker. The 110 volt heater shall be connected to shoreline. | 2183 |
| 4450-0209 | 2" tank fill Akron manual valve. | 1742 |
| 4450-0221 | 3" Left Rear Direct Tank Fill. Includes swing handle control swivel and plug with retainer. The direct tank fill piping shall be connected to the top of the tank and routed down to the valve located at the rear of unit down low. | 2365 |
| 4450-0222 | 3" Right Rear Direct Tank Fill. Includes swing handle control swivel and plug with retainer. The direct tank fill piping shall be connected to the top of the tank and routed down to the valve located at the rear of unit down low. | 2365 |
| 4465-0027 | FRC In-Control pressure governor TGA400. Includes engine transmission and master pump gauges. | 239 |
| **ELECTRICAL SYSTEMS** | | |
| 5010-0059 | VFD Text display for V-MUX electrical system. Location: [#LOC]. | 983 |
| 5010-0074 | Special programming for multiplex color display (per hour). Requires engineering review and approval to determine feasibility and time. | 67 |
| 5010-0075 | Vista display to have a customized sticker for legend buttons (Reference info in file for new configuration). May require special programming fee. | 658 |
| 5100-0053 | All cab console switches (as applicable) and the (4) body mount intake switches to be LED smart switches (IPOS). | 1885 |
| 5100-0122 | Switch circuit three way. Includes (1) additional switch. An additional switch required for more than two locations. Location: driver officer and rear of body adjacent to dump valves for activation. | 207 |
| 5100-0123 | Switch additional 12 volt/15 amp. Location and function: center console for driver side scene lights officer side scene lights and rear scene lights. | 248 |
| 5100-0124 | Switch additional 12 volt/15 amp. Location and function: center console as a spare. | 248 |
| 5110-0062 | (4) rocker switches with back lighing to be provided IPO the standard toggle switches on body for the (3) main vacuum pump intake/discharge. | 541 |
| 5110-0081 | NFPA cab siren and speaker (WHLN) package. Includes (1) siren with (2) speakers located - (1) to driver side and (1) to officer side of front bumper (includes mounting bracket). | 302 |
| 5110-0095 | (3) rocker switches with back lighting to be provided in cab on center console. Lable switch "Driver Spray Nozzle" "Officer Spray Nozzle" and "Remote Nozzle Light". Switching only being provided. Dealership to make all final connections to switches from dealer installed ground nozzle application. | 406 |
| 5150-0107 | ** N/A - Does not meet FMVSS 108 ** Whelen arrow turn signals front and rear as applicable to be set to sequential flash pattern. | 30 |
| 5150-0138 | DOT STT/BU lighting. Includes red LED stop/tail/turn and clear LED back-up lights. Lights mounted horizontally on the rear of the body | 490 |
| 5300-0308 | Whelen Mini-Freedom LED side facing front cab light bars (PR) model FNMINI 24" with MKEZ7 mounts. Red and blue LEDs with clear lenses. For use on rear mount platforms with supplemental upper level Zone A warning lights. Locate one each side front cab corners side facing. | 5361 |
| 5300-0401 | Light bar Whelen Freedom 72" LED with MKEZ7 mounts and clear lenses. Includes (6) Rota-Beam LED (4-red 2-white) (2) green LED (2) red LED (2) dual LR11 alley lights (2) LR11 take down lights and GTT 795H Opticom. N/A INTL Chassis. Location: Centered on the front cab roof. | 8791 |
| 5300-0421 | Light bar Whelen Freedom 72" LED with MKEZ7 mounts and clear lenses. Includes (8) red Rota-Beam LED and GTT 795H Opticom. N/A INTL Chassis. Location: Centered on the front cab roof. | 8282 |
| 5300-0424 | Light bar Whelen Freedom 72" LED with MKEZ7 mounts and red/clear lenses. Includes (8) red Rota-Beam LED and GTT 795H Opticom. N/A INTL Chassis. Location: Centered on the front cab roof. | 8282 |
| 5300-0447 | Light bar Federal Signal LPX 53" LED with red/clear/blue lenses red diodes outer driver clear diodes center and blue diodes outer officer. Location: Centered on the front cab roof | 2368 |
| 5300-0468 | Light bar Whelen Freedom 82" LED with MKEZ7 mounts and clear lenses. Includes (8) Rota-Beam LED (6-red 2-white) (2) red LED and GTT 795H Opticom. N/A INTL Chassis. Location: Centered on the front cab roof. | 9551 |
| 5310-0032 | Federal Signal Signal Master Light bar. Surface mounted at rear of tank. Includes (8) LED lights with controller located in cab. | 963 |

| Item No. | Description | |
|---|---|---|
| 5310-0033 | Whelen traffic advisor light bar. Surface mounted at rear of tank. Includes (8) LED lights with controller located in cab. | 1210 |
| 5350-0128 | Camera (3) backup Safety Vision LCD with split screen capable monitor. WaterMaster | 6201 |
| 5350-0129 | Camera system. Includes dual in-cab mounted monitors and officer side and rear body mounted cameras. | 1654 |
| 5350-0281 | Camera system. Includes in-cab mounted monitor driver side officer side and rear body mounted cameras. | 1505 |
| 5380-0164 | LED (Whelen) underbody ground lighting additional (PR). (1) each side below the mid-body. Water Master only. | 470 |
| 5380-0165 | (Obsolete from vendor. No new sales code created)LED (ROM V3) compartment light package. For use in L1 and R1 compartments. Water Master only. | 470 |
| 5380-0267 | Compartment light package ROM V4 LED for Water Master. Includes two lights per compartment. | 1627 |
| 5390-0042 | (Obsolete from vendor use 5390-0164)Whelen 900 series model 90C0ENZR Super LED Opti-Scene light (PR) with weatherproof connectors. Switch in cab (driver and officer side lights switched separately). Locate [#LOC]. | 2084 |
| 5390-0061 | Rear upper tank deck/scene lights wired through chassis reverse. | 98 |
| 5390-0062 | Sides and rear upper tank deck/scene lights wired through chassis reverse. | 98 |
| 5390-0063 | (8) LED scene lighting package. Locate (3) each side of tank and (2) at rear of body/tank. All (8) lights to be wired to operate with chassis transmisson in reverse. | 573 |
| 5390-0086 | Whelen Pioneer LED scene light package/ Trucklite work light. Includes (2) model PFA2 (2) model PFA1 lights with bail mounts and (1) work light. Rear and front lights wired through work light switch in switch panel; side facing lights switched seperately. Location(s): (1) PFA2 each side center of tank (1) PFA1 each side rear facing and (1) work light forward facing on upper tank. | 5396 |
| 5390-0093 | All tank mounted Deck/Scene lighting to be wired through chassis reverse. | 290 |
| 5390-0120 | (Obsolete from Vendor use 5390-0165)Whelen 900 series model 90C0ENZR Super LED Opti-Scene light (PR) with diamond plate mounting box. Switch in cab (driver and officer side lights switched separately). Locate [#LOC]. | 2304 |
| 5390-0122 | Whelen 900 series model 90C0ENZR Super LED Opti-Scene light (PR) with cast products mounting box. Switch in cab (driver and officer side lights switched separately). Locate [#LOC]. | 2304 |
| 5390-0123 | Federal Signal model QL97LEDSCENE LED scene light (PR) with weatherproof connectors. Includes switch accessible to driver (driver and officer side lights switched separately). Locate [#LOC]. | 1234 |
| 5390-0149 | Whelen 900 series model 90C0ENZR Super LED Opti-Scene light (EA) with diamond plate mounting box. Switch in cab (driver and officer side lights switched separately). Locate [#LOC]. | 1152 |
| 5390-0150 | Whelen 900 series model 90C0ENZR Super LED Opti-Scene light (EA) with cast products mounting box. Switch in cab (driver and officer side light(s) switched separately). Locate [#LOC]. | 1152 |
| 5390-0156 | Federal Signal model QL97LEDSCENE LED scene light (EA) with weatherproof connectors. Includes switch accessible to driver (driver and officer side lights switched separately). Locate [#LOC]. | 619 |
| 5390-0164 | Whelen 900 series model 9SC0ENZR Super LED Opti-Scene light (PR) with weatherproof connectors. Switch in cab (driver and officer side lights switched separately). Locate [#LOC]. | 2084 |
| 5390-0165 | Whelen 900 series model 9SC0ENZR Super LED Opti-Scene light (PR) with diamond plate mounting box. Switch in cab (driver and officer side lights switched separately). Locate [#LOC]. | 2304 |
| 5390-0187 | Whelen 900 series model 9SC0ENZR Super LED Opti-Scene light (1 EA) with weatherproof connector. Switch in cab (driver and officer side lights switched separately). Locate [#LOC]. | 1042 |
| 5400-0095 | (2) Additional halogen scene lighting package. Locate lights - (1) each side of tank centered. Wired with standard work light switching. | 584 |
| 5400-0103 | Fog Lights-Qtz Halogen (PR) Amber and located front of bumper. | 349 |
| 5400-0120 | (9) LED scene lighting package. Locate lights - (3) each side of tank (2) at rear of tank/body and (1) at front of tank/body. | 562 |
| 5400-0176 | (7) LED scene lighting package. Locate lights - (1) forward area of tank (2) each side of tank and (2) at rear of tank/body. | 1012 |
| 5400-0195 | (9) Whelen Micro Pioneer model MPBB LED scene lighting package. Locate lights - (1) forward area of tank (3) each side of tank and (2) at rear of tank/body. | 5342 |
| 5450-0377 | Light Whelen Slimline Pioneer Plus model PSL2 12V with Freightliner driver/officer brow mounts (PR). Includes switch in cab accessible to driver. | 3347 |
| 5500-0074 | Whelen model 295HFS2 siren with flush mount siren head remote amplifier and microphone. N/A in California. | 1343 |
| 5550-0235 | Code 3 NFPA warning light package. Includes X58A red/blue lightbar (8) 65 LED lights (4 red 4 blue) (2) LXEX1F LED lights (1 red 1 blue) and (2) 550 rotators (1 red 1 blue) | 565 |
| 5550-0295 | Whelen M6 Super LED lower level warning light package. Includes (6) red M6RC LED light heads (2) red 6RBRC Rota-Beam LED and (2) red M2RC LED light heads with clear lenses. Locate side facing lights: [#LOC]. | 4735 |
| 5550-0335 | Whelen M6 Super LED lower level warning light package. Includes (4) red M6RC LED light heads (2) split red/clear M6D light heads (2) red 6RBRC Rota-Beam LED and (2) red M2RC LED light heads with clear lenses. Locate side facing lights: [#LOC]. | 4792 |

| Item No. | Description | |
|---|---|---|
| 5550-0344 | Whelen M6 Super LED lower level warning light package. Includes (6) red M6R LED light heads and (4) red 6RBR Rota-Beam LED light heads. Locate side facing lights: [#LOC]. | 5181 |
| 5550-0346 | Whelen 600 Super LED lower level warning light package. Includes (6) red 600 LED light heads (2) red 6RBR Rota-Beam LED and (2) red 500 LED light heads. Locate side facing lights: [#LOC]. | 4375 |
| 5600-0239 | Whelen Ultra Freedom Micro Edge LED (PR) Model MCFLED25 clear lense with red LEDs. Location: (1) each side at rear of tank. | 1923 |
| 5600-0395 | Warning light Whelen M-Series Super LED model M9K (PR) red/amber. Surface mounted with weatherproof connector. Location: (1) on each side up high rear of body. | 1734 |
| 5600-0459 | Warning light Whelen M-Series Super LED model M9K (PR) red/amber. Surface mounted with weatherproof connector. Location: [#LOC]. | 1734 |
| **MISCELLANEOUS EQUIPMENT** | | |
| 7700-0075 | Hard Suction Hose 6" X 16' with Pyrolite Couplings | 2264 |
| 7700-0090 | Adaptor hose and strainer package. For use with vacuum pump system. For use with 3000 to 4000 gallon tanks. | 3151 |
| 7700-0091 | Floating strainer. For use with vacuum pump system. | 882 |
| 7700-0093 | Adaptor hose and strainer package. For use with vacuum pump system. For use with 2000 gallon tank. | 3151 |
| 7700-0094 | Adaptor hose and strainer package. For use with vacuum pump system. For use with 2000 thru 4000 gallon tank. | 3151 |
| 7700-0095 | Adaptor hose and strainer package. For use with vacuum pump system. For use with 2500 gallon tank. | 4530 |
| 7700-0097 | Soft Suction Hose 20ft 5" with 4.5" long handle female coupler on one end and a 4.5" long handle male coupler on the other end. | 1974 |
| 7700-0100 | Adaptor hose and strainer package. For use with vacuum pump system. For use with 2000 thru 4000 gallon tanks only. | 3151 |
| 7700-0101 | Aluminum 6" storz x 5" NH female thread swivel adaptor. For use with AP50 Pump Inlet. | 362 |
| 7700-0102 | Aluminum 6" storz x 6" NH female thread swivel adaptor. For use with MBP/DSD Pump Inlet. | 362 |
| 7700-0121 | TFT low level 6" Storz strainer. For use with vacuum pump system. | 1178 |
| 7700-0124 | TFT low level 6" strainer - NST swivel. For use with vacuum pump system. | 1143 |
| 7900-0135 | Vest traffic safety orange nylon mesh. | 19 |
| 7900-0137 | 2000 Gallon portable folding tank. Ship with unit stored in storage tank rack. | 849 |
| 7900-0138 | 2500 Gallon portable folding tank. Ship with unit stored in storage tank rack. | 1032 |
| 7900-0139 | 3000 Gallon portable folding tank. Ship with unit stored in storage tank rack. | 1172 |
| 7900-0140 | 3500 Gallon portable folding tank. Ship with unit stored in storage tank rack. | 1234 |
| 7900-0141 | 4000 Gallon portable folding tank. Ship with unit stored in storage tank rack. | 1326 |
| 7900-0155 | Junkin model JSA-300PCW stokes basket. Ship loose. | 972 |
| 7900-0170 | Zico helmet holder model UHH-1 (EA). Ship loose. | 77 |
| 7900-0177 | 3500 Gallon Aluminum frame portable folding tank. Ship with unit stored in storage tank rack. | 1234 |
| 7900-0180 | Cascade model CT-PSS1 one piece tapered stainless steel Pro Series stokes basket. Ship loose. | 1580 |
| 7900-0230 | 2500 Gallon Husky brand portable folding tank. Ship with unit stored in storage tank rack. | 1535 |
| 7900-0254 | 6" Storz special intake cap. WaterMaster only. | 184 |
| 7900-0256 | 3000 Gallon Aluminum frame portable folding tank. Ship with unit stored in storage tank rack. | 1517 |
| 7900-0257 | Soft Suction Hose 15ft 6" with 6" long handle female swivel coupler on one end and a 4.5" long handle female swivel coupler on the other end. | 1592 |
| 7900-0267 | 3500 Gallon portable folding tank. Ship with unit stored in storage tank rack. Color to be: Blue | 1234 |
| 7900-0285 | Junkin model JSA-200 stokes basket. Ship loose. | 1188 |
| **PAINTING STRIPING, LETTERING** | | |
| 8100-0195 | International paint Break 24AGM. Required with all two-tone painted International cabs. | 932 |
| 8100-0200 | International paint Break 23FGA. Required with all two-tone painted International cabs. | 808 |
| 8200-0043 | 3" Scotchlite Letters (60). Includes shade and outline per letter. | 1299 |
| 8200-0108 | Install customer supplied lettering. Location: Front cab door. | 111 |
| 8300-0107 | 4" White/Red Scotchlite stripe. Locate white on cab with bottom of stripe even with bottom of cab. The red is to be straight on the body side storage trays. | 1042 |
| 8300-0108 | 4" Red Scotchlite stripe. Locate red on cab with bottom of stripe even with bottom of cab and straight on the body side storage trays. | 1042 |
| 8300-0158 | 4" Black Scotchlite stripe. Locate on cab with bottom of stripe even with bottom of cab. The stripe is to be straight on the body side storage trays. | 1042 |
| 8300-0196 | Scotchlite Stripe - 4" wide reflective stripe on the front of the forward bumper shall be applied. Center on front bumper and extend side to side to best conform to bumper contour. Color: White (reflective). | 142 |
| 8300-0213 | Scotchlite Stripe - 6" wide reflective stripe on the front of the forward bumper shall be applied. Center on front bumper and extend side to side to best conform to bumper contour. Color: White (reflective). | 142 |

| Item No. | Description | |
|---|---|---|
| 8300-0302 | 4" White Scotchlite stripe. Locate on cab with bottom of stripe even with bottom of cab and straight on the body side storage trays. | 1042 |
| 8400-0023 | Install customer supplied logo. Location: [#LOC]. | 88 |
| 8400-0041 | Vision flag on rear commercial cab window. | 461 |

**Notes:**

**1) Availability of options are limited by other options selected, and not all options are available in every chassis/apparatus configuration. Selection of an option may require several of the above parts/items to complete the option package.**

**2) Certain options, alone or in combination with other options, may require heavier axle/suspension packages, longer frames, or reinforced frames at additional cost per the above price list.**

**3) To configure options, the E-One State Term Schedule authorized dealer will use quote configuration software to select the components necessary to effect the option, feature, or configuration requested and quote the total option price.**

Fire Apparatus Quotation for:

STATE OF OHIO TERM SCHEDULE

Quotation Number: 80874 Rev: 9

Unit Description: REHN-COMM

Quote Description: Heavy Rescue Non-Walk, Commercial Chassis

| Salescode | Extended Description | Qty |
|---|---|---|
| TESTING COMPLIANCE STANDARD | | |
| 1001-0065 | The E-ONE supplied components of the vehicle shall meet the requirements of NFPA 1901, 2016 edition. | 1 |
| 3090-0002 | OAH. Unit has no overall height restrictions. | 1 |
| 3090-0004 | OAL. Unit has no overall length restrictions. | 1 |
| 3340-1137-12F | Equipment allowance on the apparatus shall be 4000 lbs. This allowance is in addition to the weight of the hoses and ground ladders listed in the shop order as applicable. | 1 |
| CHASSIS PREP | | |
| 1020-0010 | Comm Chassis Prep E-1 Supp-FL. | 1 |
| FRAME ASSEMBLY | | |
| 1250-0011 | Rear underbody support frame. | 1 |
| AXLE OPTIONS | | |
| 1025-0042 | Front axle for commercial chassis 12,000 lb. rating. | 1 |
| 1025-0046 | Rear axle for commercial chassis 23,000lb rating | 1 |
| WHEEL OPTIONS | | |
| 1050-0007 | Front axle wheel trim kit. Includes stainless steel lug nut covers (chrome plated plastic if applicable) and center cap with E-ONE logo. Note: Center cap will have an inspection port IPO a logo if equipped with Stemco oil seals. | 1 |
| 1050-0008 | Rear axle (single) wheel trim kit. Includes stainless steel lug nut covers (chrome plated plastic if applicable) and center cap with E-ONE logo. E-ONE custom chassis w/steel wheels will have chrome plated plastic lug covers. | 1 |
| TIRE OPTIONS | | |
| 1060-0117 | RWC AirGuard LED tire pressure monitoring valve stem caps (6) for single rear axle applications. | 1 |
| AIR SYSTEM OPTIONS | | |
| 1110-0010-277 | Air inlet. To charge brake system. Commercial chassis only. Location: driver's door step area. | 1 |
| 1110-0076 | Dual Stuttertone hood mounted air horns with driver and officer foot switches to be supplied and installed by Freightliner. | 1 |
| ENGINES & TRANSMISSIONS | | |
| 1200-0256 | Freightliner Cummins ISL 330 HP 2013 EPA engine. | 1 |
| CHASSIS OPTIONS | | |
| 1680-0011 | Tow eyes rear below body, painted. | 1 |
| 1680-0078 | Tow hooks front OEM. Not available with extended E-ONE installed front bumper. Tow hooks are OEM | 1 |

| | | |
|---|---|---|
| | supplied with chassis. | |
| 1680-0110 | Chassis Trim Package for a (2) door Freightliner series. | 1 |
| 1680-0235-R01 | The batteries to be located under left hand side of cab. | 1 |
| CAB MODEL | | |
| 1500-0008 | Two door Freightliner M2 106 4x2 | 1 |
| CAB DOOR OPTIONS | | |
| 1550-0059-000-G6 | Reflective Red/Lemon Yellow printed striping positioned in the "A" formation located on the cab door panels. | 1 |
| MISC EXTERIOR CAB OPTIONS | | |
| 1675-0007 | Diesel fuel only label. | 1 |
| SEATS | | |
| 1685-0012 | Seating capacity tag of two occupants. | 1 |
| MISC INTERIOR CAB OPTIONS | | |
| 1685-0372 | Map pocket rear cab console aluminum plate to match console finish. | 1 |
| 1685-0450 | Center control console painted black Zolatone. Locate in cab between driver and officer. Includes area for NFPA siren, electrical, and in-cab controls (as applicable) switching. | 1 |
| CAB ELECTRICAL OPTIONS | | |
| 1750-0024-277-04 | Auto-Eject receptacle inlet 20 amp located driver's door step area with a Yellow cover. | 1 |
| 1750-0343 | Battery charger E-ONE LPC 20. 120 volt inlet, 20 amp output. | 1 |
| BODY SPEC | | |
| 3090-0009 | Non Walk-in Rescue Body Spec EA | 1 |
| RESCUE BODY LOWER | | |
| 3092-0010-003 | Extend diamond plate floors out to door opening. Location is L1. Extruded aluminum. | 1 |
| 3092-0010-004 | Extend diamond plate floors out to door opening. Location is L2. Extruded aluminum. | 1 |
| 3092-0010-015 | Extend diamond plate floors out to door opening. Location is R1. Extruded aluminum. | 1 |
| 3092-0010-016 | Extend diamond plate floors out to door opening. Location is R2. Extruded aluminum. | 1 |
| 3092-0010-027 | Extend diamond plate floors out to door opening. Location is B1. Extruded aluminum. | 1 |
| 3092-0014 | 19' Non Walkin Rescue Body 4/4/5/4 EA | 1 |
| RESCUE BODY UPPER | | |
| 3094-0002 | Diamond plate flat roof. Extruded aluminum. | 1 |
| 3094-0003 | Upper body height 15". Extruded aluminum. | 1 |
| RESCUE BODY REAR | | |
| 3096-0003 | Rescue rear body full height compartment with 3 compartments above the full height compartment. | 1 |
| 3096-0004 | 10" Tailboard Bolt-On With Bracing Rescue Style. | 1 |
| BODY COMPT REAR | | |
| 3110-0027 | Rear of body to have un-painted extrusions with un-painted smooth plate body panels or just unpainted smooth plate to facilitate rear body striping. | 1 |

| | | |
|---|---|---|
| **RESCUE BODY OPTIONS** | | |
| 3360-0020 | Front body panels to be diamond plate. | 1 |
| **DOORS** | | |
| 3300-0082-027 | Roll-up door a tall, 3' wide, ROM door. Satin finish. Locate in B1. | 1 |
| 3300-0083-003 | Roll-up door a tall, 4' wide, ROM door. Satin finish. Locate in L1. | 1 |
| 3300-0083-004 | Roll-up door a tall, 4' wide, ROM door. Satin finish. Locate in L2. | 1 |
| 3300-0083-006 | Roll-up door a tall, 4' wide, ROM door. Satin finish. Locate in L4. | 1 |
| 3300-0083-015 | Roll-up door a tall, 4' wide, ROM door. Satin finish. Locate in R1. | 1 |
| 3300-0083-016 | Roll-up door a tall, 4' wide, ROM door. Satin finish. Locate in R2. | 1 |
| 3300-0083-018 | Roll-up door a tall, 4' wide, ROM door. Satin finish. Locate in R4. | 1 |
| 3300-0089-005 | Roll-up door over wheel well, 5' wide, ROM door. Satin finish. Locate in L3. | 1 |
| 3300-0089-017 | Roll-up door over wheel well, 5' wide, ROM door. Satin finish. Locate in R3. | 1 |
| **SHELVES** | | |
| 3370-0034-A00 | Shelf adj full transverse. Locate in L1/R1. | 1 |
| 3370-0035-004 | Shelf adjustable 1/2 depth in transverse compartment. Locate in L2. | 1 |
| 3370-0035-005 | Shelf adjustable 1/2 depth in transverse compartment. Locate in L3. | 1 |
| 3370-0035-016 | Shelf adjustable 1/2 depth in transverse compartment. Locate in R2. | 1 |
| 3370-0035-017 | Shelf adjustable 1/2 depth in transverse compartment. Locate in R3. | 1 |
| 3370-0043 | Unistrut. All exterior compartments on rescue body will have Unistrut in each compartment unless inapplicable. | 1 |
| 3370-0052-006 | Adjustable shelf (J-Style) for non-transverse compartments 16" or greater in depth. Location: L4. | 2 |
| **COMPARTMENT DIVIDERS** | | |
| 3340-0166-003 | Partition, bolt-in vertical partition wall. Locate in L1. | 1 |
| 3340-0166-015 | Partition, bolt-in vertical partition wall. Locate in R1. | 1 |
| **TRAYS / TOOLBOARDS** | | |
| 3380-0018-018 | Adjustable roll-out toolboard. Includes upper and lower adjustable track with 250 lbs. slides and gas shock actuated. Toolboard sized to compartment height and depth as applicable. Location(s): R4. | 2 |
| 3380-0029-650 | Floor mounted Bi-Directional Slide Master with tray. Model SM2-D-SP. Mounted on floor of L1/R1 transverse. | 1 |
| 3380-0045-972 | Floor mounted Slide Master with tray. Model SM3-SP. 1/2 depth transverse or full depth on non transverse. Mount on L2 extended floor. | 1 |
| 3380-0045-973 | Floor mounted Slide Master with tray. Model SM3-SP. 1/2 depth transverse or full depth on non transverse. Mount on R2 extended floor. | 1 |
| 3380-0045-974 | Floor mounted Slide Master with tray. Model SM3-SP. 1/2 depth transverse or full depth on non transverse. Mount on B1 extended floor. | 1 |
| 3380-0046-027 | Adjustable mounted Slide Master with tray. Model SM3-SP. 1/2 depth in transverse compartments or full depth in upper B1. Mounted in transverse area or extended area of B1. | 1 |
| **MISC BODY OPTIONS** | | |
| 1675-0158-005 | Backboard storage sleve for (1) board. Includes retaining strap for board. Loc: L3. | 1 |
| 3340-0093 | Mud flaps, rear, black with E-ONE logo. | 1 |
| 3340-0174-005 | Stokes basket storage compartment. Locate in L3 with a strap(s) to hold basket in rack. | 1 |
| **SCBA BOTTLE STORAGE** | | |

| | | |
|---|---|---|
| 3320-0030 | SCBA Bottle Storage. (8) E-ONE SCBA bottle storage with hinged stainless steel doors with push-button latches. (4) officer side and (4) driver side in wheel well area. | 1 |
| 3320-0100 | Strap(s), loop style to retain SCBA bottle(s). Locate one per bottle in each exterior storage compartment. | 8 |
| ELECTRICAL SYSTEMS | | |
| 5010-0014-G97 | Vehicle data recorder for commercial cab - 2009 / 2016 NFPA compliant. Includes occupant detection with display. Display location: cab dash above transmission shift panel. | 1 |
| 5010-0036 | V-MUX Electrical system for pumper / tanker / rescue. | 1 |
| 5010-0059-339 | VFD Text display for V-MUX electrical system. Location: center of dash. | 1 |
| LIGHT BARS | | |
| 5300-0504 | Whelen MKEZ7 1.5" standard mount for front light bar (PR). | 1 |
| 5300-0506-000-4V | Light bar LED color: Red/White with clear lenses | 1 |
| 5300-0522 | Light bar Whelen Freedom IV Model F4X0 60" with 8 LED modules. Location: Centered on the front cab roof. | 1 |
| WARNING LIGHT PACKAGES | | |
| 5550-0149-B38 | Whelen M6 Super LED lower level warning light package. Includes (10) red M6R LED light heads w/chrome flanges. Locate side facing lights: at forward most position, in rear wheelwell offset to front, and on tailboard mounted light box<br>above rear tailboard. | 1 |
| 5550-0160 | Whelen M-Series Super LED upper level rear warning light package. Includes (2) red Super LED model M9RC lights with weatherproof connectors and clear lenses. Located rear of body (1) Driver and (1) Officer side upper body.. | 1 |
| 5550-0161 | Whelen M-Series Super LED upper level side warning light package. Includes (2) red Super LED model M9RC lights with weatherproof connectors and clear lenses. Located side of body (1) on the Driver and (1) on the Officer side upper rear side corners. | 1 |
| WARNING LIGHTS | | |
| 5600-0105-170 | Hazard (door ajar) light 2" LED. Location: center overhead. | 1 |
| 5600-0216-G98 | Warning light Whelen M9 series Super LED (PR) red. Location: (1) each side of body on forward upper body corners. | 1 |
| SIRENS | | |
| 5500-0017 | Whelen model 295HFSM1 siren with mechanical siren tone and microphone. N/A in California. | 1 |
| 5500-0024-B13 | The electronic siren control is to be located on the center console. | 1 |
| SPEAKERS | | |
| 5510-0029-209 | Speaker, Federal Signal Dynamax ES100 with "E-ONE" grille through bumper. Location: driver side front bumper. | 1 |
| DOT LIGHTING | | |
| 5150-0017 | License plate light LED with chrome housing located at the rear of the body. | 1 |
| 5150-0024 | Marker light LED body package. Commercial rescue bodies only. | 1 |
| 5150-0032 | Bracket license plate at rear of body. | 1 |
| 5150-0102 | Whelen M6 series LED vertical mount tail lights. Includes LED stop/tail, arrow turn and back-up lights with vertical 3 light housing and weatherproof connectors. | 1 |
| LIGHTS - COMPARTMENT, STEP & GROUND | | |
| 5380-0279 | Ground light package TecNiq T440 4" LED - small. | 1 |

| | | |
|---|---|---|
| 5380-0285 | Step light package body TecNiq T440 4" LED - small. | 1 |
| 5380-0312 | Compartment light package Hansen LED for large bodies. Includes two lights per compartment (four if transverse). | 1 |
| LIGHTS - DECK AND SCENE | | |
| 5390-0186-457 | FRC SPA900-Q70 Scene light (PR). Switch in cab (driver and officer side lights switched separately). Locate (1) each side of body rear facing up high. | 1 |
| LIGHTS - NON-WARNING | | |
| 5400-0003 | Engine compartment light (EA). | 1 |
| 5400-0031 | Pair of Cab Dome Large Lights mounted driver and officer side front. N/A on E-One Chassis. Required on Comm Chassis. | 1 |
| CONTROLS / SWITCHES | | |
| 1750-0034-A24 | Switch, additional 12 volt/15 amp. Location and function: driver rear of body for rear work lights. | 1 |
| MISC ELECTRICAL | | |
| 1750-0082-B13 | 12V power distribution module. Includes (6) battery hot and (6) switched hot circuits. 100 amps max (IATS). Location: center console. | 1 |
| 5110-0017 | Back-up alarm 97 dB. | 1 |
| 5110-0035 | All 12 Volt electrical components and Multiplex box will be located in lower L1 back wall. The compartment depth will be limited by approximately 6". | 1 |
| GENERATOR | | |
| 5250-0059 | Generator Onan 15KW PTO. Single phase 120/240v. Includes PTO, driveshaft, main breaker, gauge panel, fast idle and frequency control for engine. | 1 |
| GENERATOR TEST | | |
| 5255-0000 | 3rd party generator testing without pump. | 1 |
| BREAKER BOXES | | |
| 5200-0001-394 | Breaker box 12 place single phase. Includes main breaker. Note: If gen is 6KW or less, main will occupy 2 places leaving 10 available. Locate L1 forward wall. | 1 |
| LIGHTS - QUARTZ | | |
| 5450-0071-C27 | Quartz light Fire Research Optimum 750W/110V model OPA200-S75 with recess mount. Location(s): Forward upper body panel officer side (inboard of warning lights if equipped). | 1 |
| 5450-0071-C28 | Quartz light Fire Research Optimum 750W/110V model OPA200-S75 with recess mount. Location(s): Forward upper body panel driver side (inboard of warning lights if equipped). | 1 |
| 5450-0071-C29 | Quartz light Fire Research Optimum 750W/110V model OPA200-S75 with recess mount. Location(s): Rearward upper body panel officer side (inboard of warning lights if equipped). | 1 |
| 5450-0071-C30 | Quartz light Fire Research Optimum 750W/110V model OPA200-S75 with recess mount. Location(s): Rearward upper body panel driver side (inboard of warning lights if equipped). | 1 |
| 5450-0170-C31 | Fire Research Evolution 12V LED model FCA210-V12 with recess mount. Includes switch in cab accessible to driver. Location(s): Center of body (approximately) in upper body panels, officer side. | 1 |
| 5450-0170-C32 | Fire Research Evolution 12V LED model FCA210-V12 with recess mount. Includes switch in cab accessible to driver. Location(s): Center of body (approximately) in upper body panels, driver side. | 1 |
| RECEPTACLES | | |
| 5470-0001-453 | Receptacle twist lock 20A/110V 3 wire NEMA L5-20 with cover plate. Location: driver side rear | 1 |

| | | |
|---|---|---|
| | compartment face down low. | |
| 5470-0001-454 | Receptacle twist lock 20A/110V 3 wire NEMA L5-20 with cover plate. Location: officer side rear compartment face down low. | 1 |
| ELECTRIC CORD REELS | | |
| 5130-0002-928 | Cord reel electric with 200' of 10/3 yellow cable. Location(s): B1 ceiling mounted offset officer side. | 1 |
| 5130-0024-392 | Electric cord reel rewind switch. Switch located on wall near cord reel. | 1 |
| 5130-0028 | Rollers, captive for cord reel mounted on reel. | 1 |
| 5130-0030-928 | Junction box Circle-D with one (1) straight blade and three (3) twist lock receptacles. Located on cord for reel in B1 ceiling mounted offset officer side. | 1 |
| MISC LOOSE EQUIPMENT | | |
| 7900-0014 | DOT Required Drive Away Kit - Kit includes three (3) triangular warning reflectors with carrying case. This kit is for the end user and is to remain with the truck. | 1 |
| EXTERIOR PAINT | | |
| 8100-0071 | Undercoating E-ONE. | 1 |
| 8100-0116 | Rear body surface to have a sanded finish (not painted job color). Includes hinged doors that do not have discrete sales codes and removable panels. | 1 |
| 8100-0183-000-17 | Paint Body - Large - For Aerials, T/A Tankers/Wetsides, Rear Mounts and Rescues. Sikkens paint. Color: FLNA3225E-1 Red. | 1 |
| 8100-0443-000-17 | Freightliner cab paint (by chassis OEM). Paint to match FLNA3225E-1 Red. | 1 |
| LETTERING | | |
| 8200-0022 | Shade and outline for lettering. | 60 |
| 8200-0023 | Lettering Instructions: | 1 |
| 8200-0036-000-12 | Scotchlite Letter (Each) - 4". Color White. | 60 |
| STRIPING | | |
| 8300-0002-859-12 | NFPA Scotchlite Stripe - 4" wide and straight on front/sides of cab and sides/rear of body. Color: White. Location: bottom of stripe flush with bottom of cab and straight back. | 1 |
| 8300-0042 | White rubrail scotchlite insert. | 1 |
| 8300-0084-000-72 | Chevron "A" style 6" printed sheet Scotchlite striping full width on rear of body. Includes rear facing extrusions, panels and doors. Colors to be Yellow/Red. | 1 |
| 8300-0313 | Yellow line to indicate designated standing / walking areas above 48" high in compliance with 2016 NFPA 1901. Line to be 1" wide. Steps, ladders and areas with a railing or structure at least 12" high are excluded from requiring the line. | 1 |
| WARRANTY / STANDARD & EXTENDED | | |
| 9100-0000 | Standard 1 Year Warranty. | 1 |
| 9100-0004 | 10 Year/100,000 Mile Structural Warranty for Alum Cab / Body - Statement of Warranty. | 1 |
| 9100-0019 | 10 Year Limited Paint and Perforation Warranty - For Sikkens Paint. | 1 |
| SUPPORT, DELIVERY, INSPECTIONS AND MANUALS | | |
| 9300-0009 | Manuals, Operator and Service CD-ROM. | 1 |
| 9300-0018 | Manuals, Operator and Service CD-ROM (additional set). | 1 |
| 9300-0316 | Fire Apparatus Safety Guide published by FAMA, latest edition. | 1 |

PRICE - 2017 E-ONE RESCUE - COMMERCIAL CHASSIS - $273,594

# STATE OF OHIO TERM SCHEDULE

## 4200 SURFACE RD
## COLUMBUS, OH 43228

*Quote No: 80874*

9/21/2016

Quote Rev:9 Drawing Rev:1

| COMPT. | OPENING | | INTERIOR DIMENSION | | | |
|---|---|---|---|---|---|---|
| L1/R1 | 46W | 62H | 48W<br>48W | 50H<br>20H | 94D<br>26D | UPPER<br>LOWER |
| L2/R2 | 46W | 62H | 48W<br>48W | 50H<br>20H | 94D<br>26D | UPPER<br>LOWER |
| L3/R3 | 58W | 31H | 60W | 39H | 94D | |
| L4/R4 | 46W | 62H | 48W | 70H | 26D | |

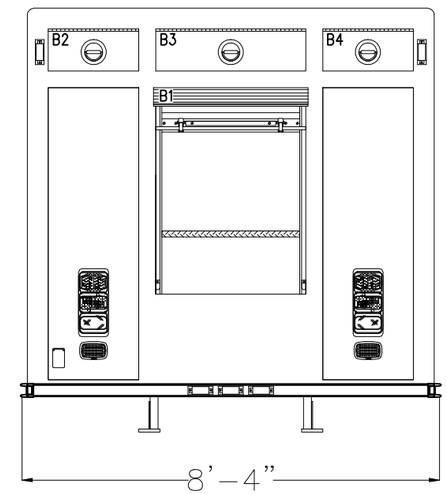


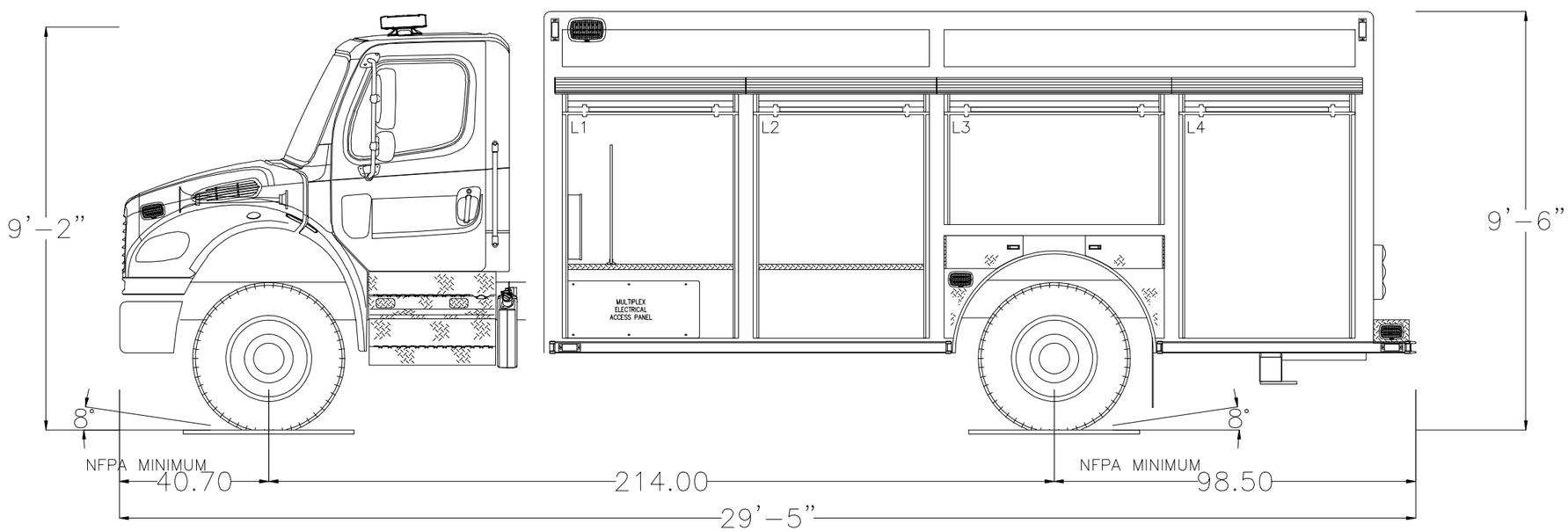


POWERED BY EZDRAW

Notice: This drawing provides a GENERAL REPRESENTATION of the vehicle configuration and should be used for evaluation purposes. The respective dimensions shown,including overall height and length, are estimates and may vary due to manufacturing processes. All other items such as lighting and fixtures, plumbing, compartmentation, and other generally assembled details are shown for REFERENCE ONLY and may not be a direct reflection of the final truck configuration. In ALL situations where this drawing may conflict with the specifications, THE SPECIFICATIONS, AS REFLECTED IN THE APPROVED SHOP ORDER, SHALL PREVAIL. Unless otherwise specified, the proposed apparatus will be manufactured to the latest NFPA recommendations as well as other applicable federally regulated safety regulations. E-One reserves the right to engineer and incorporate design improvements and changes without notice, while adhering to the intent of the specification.

80874

# STATE OF OHIO TERM SCHEDULE

## 4200 SURFACE RD
## COLUMBUS, OH 43228

*Quote No: 80874*

9/21/2016

Quote Rev:9 Drawing Rev:1

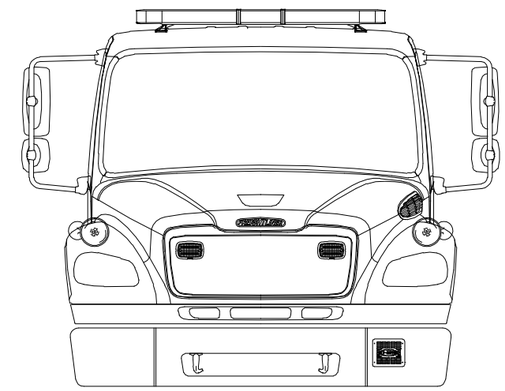

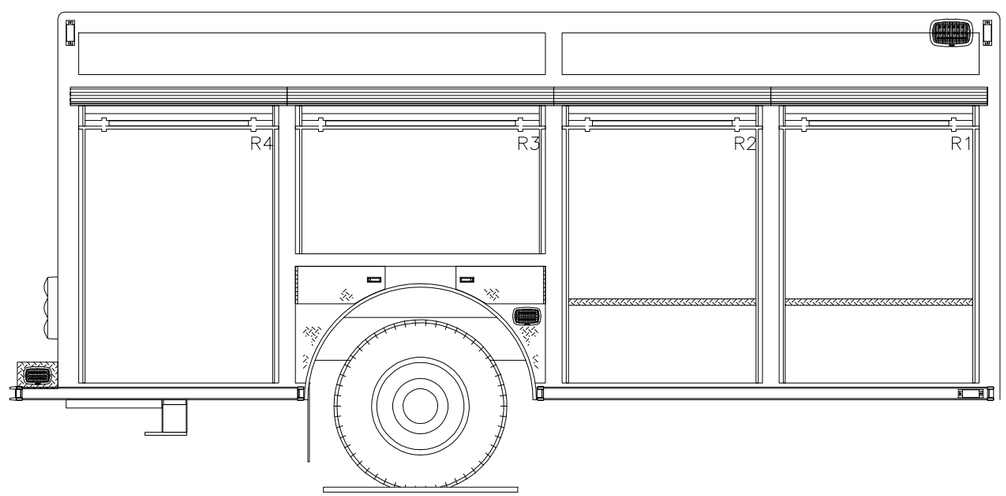


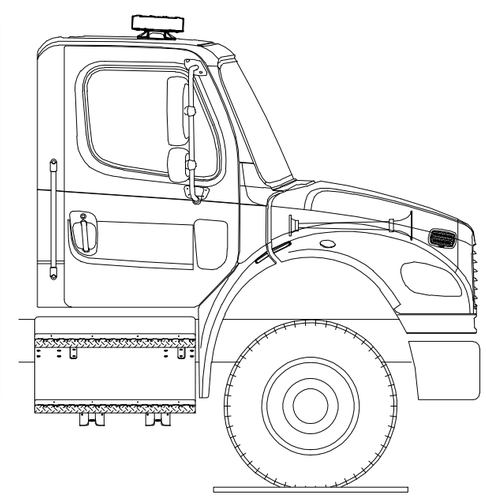

# STATE OF OHIO TERM SCHEDULE

## 4200 SURFACE RD
## COLUMBUS, OH 43228

*Quote No: 80874*

9/21/2016

Quote Rev:9 Drawing Rev:1

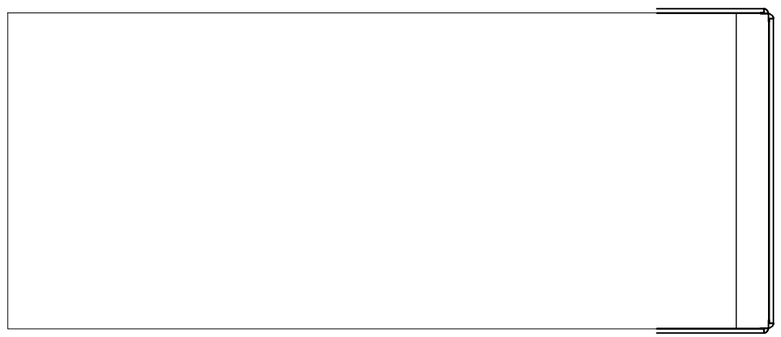

# E-ONE OHIO STATE TERM SCHEDULE 2017 OPTIONS PRICE BOOK
## RESCUE TRUCKS - COMMERCIAL CHASSIS

| Item No. | Description | |
|---|---|---|
| **COMMERCIAL CHASSIS** | | |
| 1500-0008 | Two door Freightliner M2 106 4x2. 330hp. 12f/23r | 95488 |
| 1500-0009 | Four door Freightlner M2 106 4x2. 330hp. 14.6f/26r | 105544 |
| 1500-0010 | Two door International 4400 4x2. 330 hp. 12f/26r | 93767 |
| 1500-0011 | Four door International 4400 4x2. 330hp. 14f/26r | 102268 |
| **COMMERCIAL CHASSIS MODIFICATIONS** | | |
| 1020-0005 | Chassis prep light duty. This includes master switch (switch will be manual not on dash) and exhaust mod (extended to front of rear axle on the [#LOC] w/ heat shield). The center console will not be removed and nothing will be tied up to the fuel lines. | 2708 |
| 1020-0010 | Comm Chassis Prep E-1 Supp-FL. | 3670 |
| 1020-0011 | Comm Chas Prep E-1 Supp-Non FL. International | 3670 |
| 1020-0019 | Comm Chas Prep E-1 Supp-Non FL relocate batteries to [#LOC]. | 6611 |
| 1020-0022 | Commercial Chassis Preperation for the Ford F650 | 4603 |
| 1020-0046 | Chassis prep for a Peterbuilt rescue chassis. Includes relocating of batteries exhaust positioning Fast idle control/switching master lighting switch master battery switch. | 4871 |
| 1020-0050 | Chassis prep for customer supplied M2 chassis. | 3914 |
| 1020-0051 | Comm Chas Prep E-1 Supp-Non FL. (Amp draw "TBD" and added to Opt Attributes. 25 amps has been added as estimate) | 5717 |
| 1020-0052 | Customer supplied chassis must meet E-ONE requirements for the application. | 2650 |
| 1050-0029 | Front & rear axle wheel simulator kit. Includes stainless steel wheel simulator and center cap with E-ONE logo. | 2020 |
| 1050-0073 | Wheel trim package. For use with steel or aluminum wheels. | 522 |
| 1050-0080 | Trim Kit Lug nut covers for front and rear axle wheels. Includes lug nut covers only (chrome plated plastic if applicable) | 215 |
| 1060-0049 | Tyron tire pressure monitoring system model TPMS. Includes wireless remote display in cab. | 1326 |
| 1060-0050 | Tire pressure monitoring valve stem caps. | 194 |
| 1060-0053 | PressurePro tire pressure monitoring system for single rear axle units. Includes bail mounted display in cab. | 1128 |
| 1060-0054 | PressurePro tire pressure monitoring system for tandem rear axle units. Includes bail mounted display in cab. | 1349 |
| 1060-0081 | PressurePro tire pressure monitoring system for single rear axle units. Includes electrical system integrated display in cab. | 1128 |
| 1060-0094 | Cat's Eye model 6120-AB00 single rear axle tire pressure monitoring system. For use on 120 PSI tires. Includes braided lines. | 943 |
| 1060-0103 | Cat's Eye model 6130-AB00 single rear axle tire pressure monitoring system. For use on 130 PSI tires. Includes braided lines. | 943 |
| 1060-0117 | RWC AirGuard LED tire pressure monitoring valve stem caps (6) for single rear axle applications. | 199 |
| 1060-0123 | RWC AirGuard LED tire pressure monitoring valve stem caps (2) front only. For use with rear axle Crossfire equalization systems. | 81 |
| 1100-0047 | Navistar ESP (ESC) Stability control system 4 x 2 | 1866 |
| 1110-0009 | Air horns on hood pair. Requires control. | 694 |
| 1110-0010 | Air inlet. To charge brake system. Commercial chassis only. Location: [#LOC]. | 428 |
| 1110-0013 | Air horns shut-off valve. Located in cab accessible by driver. | 126 |
| 1110-0026 | Air horns recessed in bumper (PR). | 950 |
| 1110-0027 | Isolated air tank. Includes pressure protection valve. | 646 |
| 1110-0041 | Air horns Grover recessed in bumper (PR). | 1156 |
| 1110-0044 | Air inlet Auto-Eject. Includes [#COL] weatherproof gasketed cover. Location: [#LOC]. | 551 |
| 1110-0046 | Kussmaul 12V Auto Drain. For use with Kussmaul air compressor. | 536 |
| 1110-0052 | Air horns recessed behind bumper (PR). Includes E-ONE grilles on bumper. | 1195 |
| 1110-0053 | Air horns Grover recessed in front bumper. (1) air horn 21" long (1) air horn 24.5" long | 1211 |
| 1110-0055 | Air horns will alternate from driver to officer. | 460 |
| 1110-0058 | Air horns recessed in bumper (PR) with bells behind bumper. | 1017 |
| 1110-0066 | Air horns Grover recessed in front bumper. (1) air horn 21" long (1) air horn 24.5" long. | 1419 |
| 1110-0068 | Dual Grover Hood Mounted Air Horns with Driver and Officer Foot Switches to be Supplied and Installed by E-One. | 1156 |
| 1110-0074 | Air horns Grover mounted to hood each side. (1) air horn 21" long (1) air horn 24.5" long. | 1423 |
| 1110-0082 | Air horns Grover model 2040 rectangular recessed in bumper (PR) with snow caps. | 1233 |

| Item No. | Description | |
|---|---|---|
| 1110-0085 | Bumper mounted Grover 21" air horns. Controls required and provided separately. | 999 |
| 1110-0090 | Air horns Grover recessed in bumper (PR) with snow caps. | 1304 |
| 1110-0092 | Air tank manual drains shall have cables routed to the outside of the apparatus and labeled accordingly. | 106 |
| 1110-0106 | Air horns Grover recessed behind bumper (PR). Includes E-ONE grilles on bumper. | 1402 |
| 1110-0112 | Martin-Horn No. 2297 GM. Includes set of (4) horns air compressor and snow caps for horns. Locate horns and compressor in cab. Horn compressor to be activated through switch in cab accessible to the driver. | 6028 |
| 1110-0116 | Air horns Buell recessed in bumper (PR). | 1205 |
| 1110-0117 | Air horns Grover model 2040 rectangular recessed in bumper (PR). | 1233 |
| 1110-0124 | Air horns Grover recessed behind bumper (PR). Includes grilles (No Logo) on bumper. | 1402 |
| 1110-0135 | Air horns shut-off valve. Located on driver side overhead console. | 126 |
| 1110-0136 | Air horns shut-off valve. Located on officer side overhead console. | 126 |
| 1110-0138 | Air horns Grover model 2040 rectangular behind bumper (PR). Includes E-ONE grilles. | 1479 |
| 1150-0054 | Hinged diamond plate lid for driver side bumper tray. Includes 1/4 turn latch and gas shock hold open. | 312 |
| 1150-0055 | Hinged diamond plate lid for center bumper tray. Includes 1/4 turn latch and gas shock hold open. | 343 |
| 1150-0056 | Hinged diamond plate lid for officer side bumper tray. Includes 1/4 turn latch and gas shock hold open. | 312 |
| 1150-0061 | Red vinyl lid with velcro fasteners for bumper tray center. | 205 |
| 1150-0064 | Black vinyl lid with velcro fasteners for bumper tray center. | 205 |
| 1150-0065 | Diamond plate lid for driver center and officer hose trays. 5.25" high with dual chrome grab handles rubber hood latches and gas shocks. | 671 |
| 1150-0094 | Hinged diamond plate lid for driver side bumper tray. Includes D-Ring latch and gas shock hold open. | 341 |
| 1150-0095 | Hinged diamond plate lid for center bumper tray. Includes D-Ring latch and gas shock hold open | 373 |
| 1150-0096 | Hinged diamond plate for officer side bumper tray. Includes D-Ring latch and gas shock hold open. | 341 |
| 1150-0097 | Tray driver side bumper outboard for hydraulic/cord reel. | 781 |
| 1150-0098 | Tray officer side bumper outboard for hydraulic/cord reel. | 781 |
| 1150-0102 | Diamond plate lid for driver hosetray. 5.25" high with chrome grab handle rubber hood latch gas shock and water stop angle. | 442 |
| 1150-0103 | Diamond plate lid for center hose tray 5.25" high with chrome grab handle rubber hood latch gas shock and water stop angle. | 442 |
| 1150-0104 | Diamond plate lid for officer hosetray. 5.25" high with chrome grab handle rubber hood latch gas shock and water stop angle. | 442 |
| 1150-0118 | Bumper tray driver's side with slats 14 inches deep (approx 13 inches to slats). | 515 |
| 1150-0119 | Bumper tray center of bumper with slats 10 inches deep (approx 9 inches to slats). | 515 |
| 1150-0121 | Bumper tray center of bumper with slats 14 inches deep (approx 13 inches to slats). | 515 |
| 1150-0124 | Bumper tray officer's side with slats 14 inches deep (approx 13 inches to slats). | 515 |
| 1150-0128 | Notch front bumper tray for speaker/Q2B/radar. Will reduce front hose/equipment load. Center tray only. | 139 |
| 1150-0130 | Black nylon cargo net on center front bumper tray. | 337 |
| 1150-0131 | Extinguisher tube in front bumper extension. Location: [#LOC]. | 867 |
| 1150-0136 | Bumper tray center of bumper with slats 16 inches deep (approx 15 inches to slats). Mount tray 1" above gravel shield. | 615 |
| 1150-0139 | Nylon black strap with aluminum quick release buckle for front bumper hose tray. Strap to attach to front and rear walls of tray down low as applicable. Location: [#LOC]. | 129 |
| 1150-0140 | Bumper tray center of bumper with slats 14 inches deep (approx 13 inches to slats). Mount tray 1" above gravel shield. | 615 |
| 1150-0146 | Water stop angle. Gravel shield mounted. Requires raised lid and/or 28" bumper extension with reel trays. | 220 |
| 1150-0148 | Tray center of bumper aft of winch max available depth as applicable. | 515 |
| 1150-0155 | Tray officer side bumper outboard for hydraulic/cord reel. | 830 |
| 1150-0156 | Tray driver side bumper outboard for hydraulic/cord reel. | 830 |
| 1150-0157 | Diamond plate raised full lid for extended front bumper. 6" high with dual chrome grab hands rubber hood latches and gas shocks. | 800 |
| 1150-0159 | Bumper tray center of bumper with slats 16 inches deep (approx 15 inches to slats). | 515 |
| 1150-0164 | Bumper tray center of bumper with black Turtle Tile 14" deep (approx. 13.25" from tile). Includes: hinged diamond plate lid for center bumper tray with Tri-Mark latch gas shock hold open and door ajar switch. | 1063 |
| 1150-0168 | Bumper tray center of bumper without slats 10 inches deep. | 441 |

| Item No. | Description | |
|---|---|---|
| 1150-0169 | Bumper tray center of bumper without slats 12 inches deep. | 441 |
| 1150-0170 | Bumper tray center of bumper without slats 14 inches deep. | 441 |
| 1150-0174 | Slatted Duradek flooring in driver side bumper tray. | 67 |
| 1150-0175 | Slatted Duradek flooring in center bumper tray. | 67 |
| 1150-0176 | Slatted Duradek flooring in officer side bumper tray. | 67 |
| 1150-0177 | Notch front bumper tray for speaker/Q2B. Will reduce front hose/equipment load. Driver's side only. | 139 |
| 1150-0179 | Bumper tray center of bumper without slats 16 inches deep. | 441 |
| 1150-0195 | Bumper tray center of bumper with black Turtle Tile 14" deep (approx. 13.25" from tile). | 515 |
| 1150-0197 | Nylon black strap with aluminum quick release buckle. Location: driver officer and center top of front bumper gravel shield. | 384 |
| 1150-0198 | Notch front bumper tray for speaker/Q2B. Will reduce front hose/equipment load. Officer's side only. | 139 |
| 1150-0200 | Bumper tray center of bumper with slats 18 inches deep (approx 17 inches to slats). | 515 |
| 1150-0201 | Notch front bumper tray for speaker/Q2B. Notch to be sized as close to obstacle as possible to provide more storage space in tray. Will reduce front hose/equipment load. Center only. | 139 |
| 1150-0207 | Hinged diamond plate lid for center bumper tray. Includes 1/4 turn latch and moon spring hold open. | 343 |
| 1150-0213 | Bumper tray center of bumper (w/o slats) 10 inches deep. | 515 |
| 1150-0214 | Traffic cone storage on front bumper extension. Cones to be oriented downard through a 7 3/4" hole in the gravelshield. Includes nylon strap with aluminum buckle. Location: [#LOC]. | 426 |
| 1150-0215 | Hinged diamond plate lid for center bumper tray. Includes 1/4 turn latch and two (2) gas shock hold open. | 375 |
| 1150-0216 | Bumper tray lid(s) to be constucted using 3/16" aluminum ipos. | 164 |
| 1150-0219 | Additional gas shock on front bumper tray lid. Location: [#LOC]. | 177 |
| 1150-0220 | Tray driver side bumper outboard for hydraulic/cord reel 18 inches deep IPOS. | 952 |
| 1150-0221 | Tray officer side bumper outboard for hydraulic/cord reel 18 inches deep IPOS. | 952 |
| 1150-0223 | Bumper tray officer's side with slats 16 inches deep (approx 15 inches to slats). | 515 |
| 1150-0225 | The rear wall of bumper tray to have louvers for additional ventilation. Location: [#LOC]. | 201 |
| 1150-0227 | Bumper tray center of bumper with slats 18 inches deep (approx 17 inches to slats). | 441 |
| 1150-0228 | Bumper tray driver's side of bumper with black Turtle Tile 14" deep (approx. 13.25" from tile). | 515 |
| 1150-0230 | Bumper trough full length mounted on top of gravel shield. Trough shall run side to side 4" high 7" wide made from 3/16" smooth plate aluminum. | 276 |
| 1150-0231 | Nylon black strap with aluminum quick release buckle for front bumper hose tray. Strap to attach to front and rear walls of tray as high as possible. Location: [#LOC]. | 129 |
| 1150-0232 | Hinged diamond plate lid for center bumper tray. Includes Tri-Mark latch and gas shock hold open. | 459 |
| 1150-0233 | Hinged smooth plate lid for driver side bumper tray. Includes D-Ring latch and gas shock hold open. Lid to painted with black Scorpion brand coating inside and outside surfaces (smooth finish). | 454 |
| 1150-0239 | Bumper trays shall have 1/2" drain holes IPOS. | 31 |
| 1150-0241 | Bumper tray center of bumper with slats 14 inches deep (approx 13 inches to slats) fabricated from smooth plate aluminum. Outside facing surface of tray below bumper shall be painted black Durabak. | 616 |
| 1150-0247 | Hinged diamond plate lid raised 3" high for center bumper tray. Includes a single chrome grab handle SS butterfly latches and gas shocks. | 419 |
| 1150-0250 | Single crosslay on top of the front bumper gravel shield. Tray to be "U" shape approx 10" wide x 7.5" high x 90" wide. Holds 200' of 1.75" DJ (each). Includes diamond plate cover hinged at the front. Requires seperate side cover and 24" extension. | 1270 |
| 1150-0253 | Black nylon cargo net on driver side front bumper tray. | 337 |
| 1150-0255 | Hinged smooth plate lid for driver side bumper tray. Includes D-Ring latch and gas shock hold open. Smooth plate lid will be painted with black Durabak. | 434 |
| 1150-0256 | Bumper tray(s) to be constructed using smooth plate aluminum with exterior surface painted black Durabak. | 206 |
| 1150-0259 | Bumper tray with no slats approx. 6" deep extending full width of the bumper as applicable based on outboard options. Includes notched frame extensions to provide flat floor for the tray. | 959 |
| 1150-0269 | Bumper tray to be constucted using 3/16" aluminum ipos. | 114 |
| 1150-0272 | Raised lid over bumper tray to be extended over jumpline swivel on top of gravel shield. For use with 2" swivel only. | 67 |
| 1150-0275 | Hinged smooth plate lid for center bumper tray. Includes 1/4 turn latch and gas shock hold open. Smooth plate lid will be painted black Durabak. | 428 |
| 1150-0276 | Nylon black strap with aluminum quick-release buckle. Location: driver officer and (2) center top of front bumper gravel shield. | 515 |

| Item No. | Description | |
|---|---|---|
| 1150-0279 | Tray center of bumper forward of winch max depth as applicable per winch application. Smooth plate .125 aluminum DA finish. Tray will will be forward of winch mount and access lid above fairlead path. Recessed to max allowable depth per application to provide additional storage depth under raised lid for rescue tool to be placed topside under lid. | 325 |
| 1150-0280 | Bumper tray center of bumper with slats 17 inches deep (approx 16 inches to slats). Mount tray 1" above gravel shield. Exterior of tray to be painted FLNA4145 Black. | 990 |
| 1150-0281 | Hinged diamond plate lid for driver side bumper tray. Includes D-Ring latch and moon spring hold open. | 373 |
| 1150-0283 | Hinged diamond plate lid for center and officer bumper tray. Includes (2) D-Ring latches (2) gas shock hold open and smooth plate spacer between bumper trays. | 713 |
| 1150-0284 | Nylon black strap with aluminum quick release buckle. Location: driver officer and center top of front bumper gravel shield. Mount at final inspection. | 384 |
| 1150-0286 | Shallow bumper tray located center of the bumper without slats. Tray to be as wide and as deep as possible while maintaining a flat floor without notches or protrusions. | 350 |
| 1150-0287 | Hinged diamond plate lid for officer side bumper tray. Includes D-Ring latch and moon spring hold open. | 373 |
| 1150-0288 | Bumper tray secondary. Tray located towards the rear beneath first center tray for additional storage. Tray to be as long front to back as possible while maintaining a flat floor without notches or protrusions and still have the seconday lid removable. Tray to be as wide as applicable and as deep as other trays on the truck. | 459 |
| 1150-0290 | All fabricated aluminum sheet metal parts installed on the bumper shall be made using smooth plate in place of standard. Includes gravel shield tray(s) lid(s) and other miscellanous parts. | 206 |
| 1150-0293 | Bumper tray driver side of bumper made as large as possible with slats 14 inches deep (approx 13 inches to slats). Mount tray 1" above gravel shield. | 729 |
| 1150-0294 | Insulation on exterior of the bumper tray assembly. Location: Driver side. | 267 |
| 1150-0296 | Hinged diamond plate lid for officer bumper tray. Includes Tri-Mark latch and gas shock hold open. | 459 |
| 1150-0297 | Bumper tray driver side of bumper made as large as possible without slats 14 inches deep. Mount tray 1" above gravel shield. | 729 |
| 1150-0298 | Bumper tray center of bumper without slats 14 inches deep. Mount tray 1" above gravel shield. | 615 |
| 1150-0300 | Bumper tray driver's side with slats 16 inches deep (approx 15 inches to slats). | 515 |
| 1150-0301 | Tray center of bumper aft of winch max available depth as applicable. Slats shall be provided. | 621 |
| 1150-0303 | Nylon black strap with aluminum quick release buckle for front bumper hose tray. Strap to attach to front and rear top of tray. Location: [#LOC]. | 129 |
| 1150-0307 | Bumper tray center of bumper with slats 16 inches deep (approx 15 inches to slats). Mount tray 2" above gravel shield. | 615 |
| 1150-0309 | Hinged smooth plate lid with DA finish for center bumper tray. Includes 1/4 turn latch and gas shock hold open. | 343 |
| 1155-0000 | Class III hitch for portable winch for the front. | 988 |
| 1155-0002 | Winch electric front mounted Ramsey 12000 lb. Includes access door with quarter turn latch and spring hold open device. | 4609 |
| 1155-0003 | Winch Warn Series 8 - 8000lb with 125' 3/8" plated cable. | 3957 |
| 1155-0004 | Winch semi hidden Warn 12000lb with 125' 3/8" plated cable. N/A with 16" extended bumper. | 4354 |
| 1155-0005 | Winch Warn Series 12 12000 lb. with 125' 3/8" plated cable. Includes access door with quarter turn latch and spring hold open device. Locate: Mounted to the chassis frame extension centered at the front bumper area. | 5796 |
| 1155-0013 | Winch Warn Series 12 12000 lb. with 125' 3/8" plated cable. Includes access door hinged rearward that is smooth plate alum (IPO tread) and painted with black Scorpion brand coating inside and outside surfaces (smooth finish). Latch to be D-Ring style (IPO std. 1/4 turn latch). Lid to have 1 gas shock. | 5940 |
| 1155-0014 | A 6000 lb Warn multi-mount (portable) electric reversible winch with 125' of 3/8'' plated wire rope and a replaceable clevis hook shall be installed and shall be controlled with a 12' remote control switch. Includes rollers. | 2531 |
| 1155-0018 | Winch Warn Series 12-S Spydura Pro 12000 lb. with 100' of 7/16" synthetic rope and Hawse fairlead. Includes access door with quarter turn latch and spring hold open device. | 6477 |
| 1155-0019 | Winch Warn Series 12 12000 lb. Includes 100' 7/16" Spydura Pro synthetic rope fairlead & 32' remote. Locate: Mounted to the chassis frame extension centered at the front bumper area. A service access to the winch shall be provided. | 6232 |
| 1155-0021 | Warn Winch 9000 lb. with 125' 3/8" plated cable. Includes access door with quarter turn latch and spring hold open device. Locate: Mounted to the chassis frame extension centered at the front bumper area. | 3384 |
| 1160-0004 | Stainless Steel 10" high front bumper. Requires extended front bumper. | 1441 |
| 1160-0012 | 12" Front Bumper Gravel Shield Extension. | 163 |
| 1160-0013 | 16" Front Bumper Gravel Shield Extension. | 312 |

| Item No. | Description | |
|---|---|---|
| 1160-0014 | 20" Front Bumper Gravel Shield Extension. | 553 |
| 1160-0015 | 24" Front Bumper Gravel Shield Extension. | 732 |
| 1160-0041 | Heavy duty front bumper 10" high with full wrap around. To be painted job color. | 2529 |
| 1160-0051 | 3/16" Front Bumper Gravel Shield. Smooth plate painted with black Durabak. | 1517 |
| 1160-0055 | Guard straps for bumper mtd recessed Q2B - polished stainless steel. | 346 |
| 1160-0058 | Trailer hitch ball and pintle hook combo kit. | 1190 |
| 1160-0068 | 1/8" Front Bumper Gravel Shield. Smooth plate painted with black Durabak. | 1517 |
| 1160-0082 | Front bumper extension. For use with International 7000 Series 4x4 chassis. Total extension to be 20" including the OEM frame extension. | 553 |
| 1160-0108 | 3/16" Front Bumper Gravel Shield. Smooth plate painted with black Scorpion coating. | 1517 |
| 1160-0120 | 1/8" Front Bumper Gravel Shield. Includes 1" return break on each side of heavy duty bumper. | 179 |
| 1160-0121 | Diamond plate lower gravelshield. Located under side of the front bumper extension. | 863 |
| 1160-0122 | 20" Front Bumper Gravel Shield Extension. The extension shall extend further forward and each side to align with the edge of the bumper. | 634 |
| 1160-0131 | 1/8" Front Bumper Gravel Shield for heavy duty bumper. Includes 1" turn down around perimeter of HD bumper. | 242 |
| 1160-0133 | Heavy duty front bumper 10" high with full wrap around. Center of bumper to have a 5" deep notch for recessed Q2B. Bumper to be painted 2-tone job color. | 3139 |
| 1160-0139 | 20" Front Bumper Gravel Shield Extension for recessed crosslay to be used on commercials only. | 2824 |
| 1160-0141 | 3/16" Front Bumper Gravel Shield with 1" turn down lips to protect the top edge of the heavy duty bumper from damage. Smooth plate painted with black Durabak. | 1574 |
| 1160-0145 | Notch front bumper for low "S" type front intake. 10" deep tray below pipe extending from cab to bumper to hold at minimum 25' of 5" LDH. Include nylon strap (seat belt type) for tray. | 2169 |
| 1160-0147 | Heavy duty front bumper 10" high with full wrap around. To be constructed of 110000 PSI frame rail material and painted job color. | 3793 |
| 1160-0149 | LINE-X bumper package: Includes all visible diamond plate surfaces including gravel shield exterior surface of trays and lids(flat or raised). If equipped exterior of the fabricated booster reel housing fabricated box for booster reel rollers and winch access door shall be included in this package. | 1018 |
| 1160-0155 | LINE-X bumper: The bottom lip of the bumper shall have LINE-X finish. | 236 |
| 1160-0156 | Durabak Black bumper package: Includes all visible plate surfaces including gravel shield exterior surface of trays and lids(flat or raised). If equipped exterior of the fabricated booster reel housing fabricated box for booster reel rollers and winch access door shall be included in this package. | 1018 |
| 1160-0157 | Heavy duty front bumper 10" high with full wrap around. Center of bumper to have a 5" deep notch for recessed Q2B. Corners to be tapered 8"x8". (Not available with reel trays). Bumper to be painted job color. | 3357 |
| 1160-0164 | Heavy duty inner city front bumper 10" high with full angle corners. Includes support wings for angled corners. Center of bumper to have a 5" deep notch for recessed Q2B. Bumper to be painted job color. | 3466 |
| 1160-0166 | 26" Front Bumper Gravel Shield Extension. | 809 |
| 1160-0170 | 3/16" Front Bumper Gravel Shield with 1" turn down lip. Smooth plate painted with LINE-X. | 1405 |
| 1160-0175 | Zinc flame spray coating for heavy duty front bumper (outside and inside surfaces) prior to painting. | 528 |
| 1160-0177 | Heavy duty 10" front bumper with full wrap around. Corners to be tapered 8"x8". (Not available with reel trays). To be painted job color. | 2741 |
| 1160-0178 | Heavy duty inner city front bumper 10" high with full angle corners. Includes support wings for angled corners. Driver side of bumper to have a 5" deep notch for recessed Q2B. Officer side of bumper to have notch for front suction. Bumper to be painted job color. | 4102 |
| 1200-0290 | International Navistar N10 SCR 350hp@2200 RPM/1150ftlbs torque@1200 RPM 2200 RPM GOV in place of standard engine. | 3809 |
| 1225-0012 | Ward No Smoke Exhaust System. | 19646 |
| 1225-0014 | Exhaust driver side custom chassis. | 696 |
| 1225-0054 | Locate exhaust end 3" below rubrail extending 2" past rubrail. | 270 |
| 1225-0057 | Nederman exhaust transmitter on cab dash. Wired through engine run. | 1206 |
| 1225-0059 | Ward No Smoke 2 Exhaust System. | 19646 |
| 1250-0006 | Frame liner 9.375 x 3.125 x .375. | 3448 |
| 1250-0011 | Rear underbody support frame. | 658 |
| 1250-0061 | Frame liner "L" 8.875 x 3.125 x .375. | 3200 |
| 1250-0074 | Rear underbody support frame with side tow eye style frame brackets without lower tow eyes to minimize impact on departure angle. To be used with frame mounted tow eyes facing rearward from frame rails. | 1124 |
| 1250-0076 | Rear underbody support frame. Includes zinc plated (galvanized) IPOS. | 1560 |
| 1350-0002 | Recessed fuel fill | 149 |

| Item No. | Description | |
|---|---|---|
| 1350-0010 | Fuel pick-up for generator or pump. Includes hoses run to generator compartment. | 156 |
| 1350-0016 | Fuel Fill Package. Required on chassis with approved factory tank. | 414 |
| 1350-0058 | Radiator mounted fuel cooler. | 545 |
| 1400-0011 | Battery splash cover for ULC compliance. | 343 |
| 1400-0022 | Battery Rollout Tray in Commercial Chassis in Deluxe Trim Package. | 776 |
| 1400-0058 | Battery deep cycle. Two (2) 12V deep cycle batteries shall be provided. Isolated batteries shall be wired in series to provide 24VDC service to a CBRN system. Note: Batteries not to be connected to OEM chassis electric bus. Locate: L1 Aft. | 962 |
| 1510-0151 | Universal air pack bottle bracket installed (EA). | 173 |
| 1510-0203 | Bracket SCBA IMMI SmartDock Gen2 restraint system. Location: [#LOC]. | 559 |
| 1510-0348 | Bostrom Flip up attendant seat pair vinyl. Seat color: Black. Locate: Inside rear body module facing aft centered on forward bulkhead. | 2624 |
| 1515-0047 | Stainless steel pan for body roof mounted A/C unit. Includes drain line that does not drip on drivelines. | 725 |
| 1515-0049 | Roof mtd A/C system Penguin II 13500 BTU with 5600 BTU heat strips. Locate on cab roof wired to shore power. Locate control head in center overhead console offset to driver side. | 4068 |
| 1515-0055 | Roof mtd A/C system Penguin 13500 BTU. Includes: auto transfer switch and a dedicated auto-eject with "Yellow "cover. The outer housing cover for the A/C unit to be painted Black. Locate: on body module rehab roof includes wiring to shore power connection at cab door. | 4939 |
| 1515-0061 | Roof mtd A/C system Penguin 13500 BTU w/ 5600 BTU heat. Includes: auto transfer switch and a dedicated auto-eject with "Yellow "cover. The outer housing cover for the A/C unit to be painted Black. Locate: on body module rehab roof includes wiring to shore power connection at cab door. | 5025 |
| 1525-0002 | Cab L-shape desk per dealer supplied photo markup. See VanMor Spec for full details of quote. | 7704 |
| 1525-0003 | Straight command desk with file cabinet below to the rear overhead cabinet monitors and receptacles. Location: inside cab driver side wall and span from rear wall to rear driver seat. "E-One to run wire to accommodate generator receptacle options in cab" See VanMor Spec for full details of quote. | 7777 |
| 1535-0144 | 11"H x 18"W access opening with cargo net cover on officer side of rear wall medical medical cabinet down low. | 448 |
| 1535-0254 | Rubber floor matting on interior of all medical cabinet floors. | 227 |
| 1535-0273 | Compartment dividers with rubber floor matting on interior of vista cabinet floor. | 284 |
| 1540-0002 | Center console with map storage box. | 1517 |
| 1540-0043 | Floor Mounted Map Box Between Driver and Officer Seats of Commercial Chassis. | 2681 |
| 1540-0061 | Map storage box constructed of 3/16" aluminum. | 1640 |
| 1540-0067 | Map storage box constructed of 1/8" aluminum. Map Box will include forward area for switching center area will have an area to mount sirens radios door adjar light and 12 volt power points rear of this area will be a hinged door area for maps and mounted to the rear of the box there will be a bracket to hold a 3 ring binder. | 1640 |
| 1540-0101 | The center console shall have an adjustable track mounted to the front of the console for joystick control mounting bracket. | 215 |
| 1540-0105 | Map Box custom for Renton. Box size approx. 20" wide x 24" long x 12" tall. Box design to accommodate 10 equal sized spaces approx. 3.75" wide x 11.5" long x 11.5" tall. Includes: lid hinged to rear with latch. Ref photo on file for Renton. Finish: sanded aluminum unless otherwise specified. | 2409 |
| 1540-0106 | Box aluminum 20W x 12T x MAX length front to rear as space provides. Includes: hinged lid with hinge located aft and black thumb style lever latch for access. Finish is sanded aluminum. Locate: rear of cab center console with top flush with top of console. | 724 |
| 1550-0065 | (3) Incandescent cab step area lighting. Locate each light in [#LOC]. Lights to be switched with door ajar. | 139 |
| 1550-0138 | Door mounted Whelen M2 red super LED flashing lights (4). Locate lights on each cab door in the outboard position. Each individual light shall be activated by the corresponding cab door ajar circuit. | 1261 |
| 1550-0168 | Additional body entry door strap. Add one (1) additional door check strap to the standard body entry door strap configuration. Straps shall be equally spaced as near as possiable pending existing design limitations. Location: One (1) each body entry door. | 257 |
| 1550-0173 | Stainless steel trim on bottom edge of the over wheel cab compartment opening (ea). Vertical trim edge to be 3" tall. | 141 |
| 1550-0176 | Door mounted Whelen 3SR00FRR red super LED flashing lights (4). Locate lights [#LOC]. Each individual light shall be activated by the corresponding cab door ajar circuit. | 816 |
| 1550-0210 | Door mounted Power Arc model PP2-RC red LED flashing lights (4) w/clear lenses. Locate lights [#LOC]. Lights to be switched with door ajar. | 941 |

| Item No. | Description | |
|---|---|---|
| 1550-0216 | Door mounted Whelen 400 red Super LED flashing lights with clear lenses (4). Locate lights [#LOC]. Lights to be switch with door ajar. | 1090 |
| 1675-0008 | Step chassis off road type pair. Required on all medium duty 4x4 chassis for each cab door if first step distance exceds 24 inches. | 490 |
| 1675-0030 | Mud flaps front black with E-ONE logo. | 176 |
| 1675-0033 | Chrome fire bell with eagle. Location: Officer's side of front bumper extension. | 1561 |
| 1675-0052 | Relocate commerical chassis batteries location [#LOC]. | 900 |
| 1675-0063 | Mud flaps front black without logo. | 180 |
| 1675-0131 | Auto Kwikee step. Location: [#LOC]. | 929 |
| 1675-0149 | The battery charger receptacle mounting plate shall be fabricated using 3/16" aluminum smooth plate. It shall be painted to match cab two tone job colors and align with the paint break as mounted. | 158 |
| 1675-0154 | The cab shall have trim plates made from diamond plate to overlay the existing commercial cab closeout panels below the doors left and right. | 440 |
| 1675-0163 | Storage box (additional) to house light tower controls/tether mounted on the rear of the cab roof offset to the driver side (exterior). The storage box shall be constructed of tread plate include a drop down door tied into the door ajar circuit and thumb latch(s). | 407 |
| 1675-0169 | Door single vertically hinged painted with Tri-Mark latch. Location(s): driver side canopy area of cab. | 1040 |
| 1675-0175 | Window a fixed window w/approx dim 12 in tall x 26 in wide provided on the driver`s side of cab in place of rear door location and above counter. The top edge of the window shall be inline with the top edge of the front door window. | 180 |
| 1675-0184 | Chrome fire bell with eagle. Location: Officer's side front cab corner. | 1679 |
| 1675-0189 | Door single vertically hinged painted with Tri-Mark latch. Location(s): officer side canopy area of cab. | 1040 |
| 1675-0205 | Drip pan for a ROM roll-up door (EA). Location(s): driver and officer side ALS door. | 189 |
| 1675-0217 | LINE-X package for custom cab roof: All roof plate surfaces including the rear lip over the back wall and trough plates if applicable shall have LINE-X coating. All plate work (risers boxes etc) fabricated at E-ONE and installed on the roof shall be included in this package. | 1898 |
| 1675-0218 | LINE-X package for custom cab back wall (exterior only): The entire exterior back wall (platework and extrusions) shall have LINE-X coating. | 1482 |
| 1675-0219 | LINE-X package for custom cab fenderettes. | 160 |
| 1675-0220 | Chrome fire bell. Location: Officer's side of front bumper extension. | 1561 |
| 1675-0238 | DEF Tank Inside Cab Door label to be mounted on the exterior of the driver side rear cab door. | 46 |
| 1675-0240 | Custom cab roof trough overlay shall have LINE-X coating. | 352 |
| 1680-0011 | Tow eyes rear below body painted. | 690 |
| 1680-0012 | Tow eyes rear frame painted. | 614 |
| 1680-0013 | Tow hooks front stainless steel in down position. Requires extended bumper on commercial chassis. If Non-Extended bumper on Comm. Chassis tow hooks are to be ordered with chassis. | 900 |
| 1680-0015 | Trailer hitch Class III mounted rear. | 1098 |
| 1680-0042 | Tow hooks front painted in the down position. | 311 |
| 1680-0059 | DELUXE TRIM PKG 2DR INTNL | 2774 |
| 1680-0060 | Deluxe Trim Pkg 4DR Navistar. | 4852 |
| 1680-0062 | Deluxe Trim Pkg 2DR M2 | 3506 |
| 1680-0063 | Diamond Plate Running Boards Ford. | 802 |
| 1680-0075 | (3) way rear underbody receiver assembly. Includes rearward 9000 lb. winch receiver or Class III trailer receiver and (2) side facing 9000 lb. winch receivers- (1) each below rearward body compartments. Includes rearward tow eyes and electrical winch connections for each receiver. | 2640 |
| 1680-0077 | Front bumper 9K winch receiver. Includes electrical connection for portable winch application. Commercial chassis only. | 2083 |
| 1680-0094 | Trailer hitch Class IV mounted rear. | 2004 |
| 1680-0095 | Side underbody 9K winch receivers. Includes (2) side facing- (1) each below rearward body compartments for portable winch with electrical connection for winch. | 1761 |
| 1680-0096 | Side underbody 9K winch receivers. Includes (2) side facing- (1) each below body compartment ahead of the rear wheels for portable winch with electrical connection for winch. | 1761 |
| 1680-0104 | OEM chassis step package for Freightliner M2 series. Includes mounting plate for the battery charger receptacle and air inlet. | 165 |
| 1680-0106 | OEM chassis step package for International 4000 and 7000 series. Includes mounting plate for the battery charger receptacle and air inlet. | 175 |
| 1680-0107 | Diamond plate trim package for a (2) door International. Includes a full length driver side and an officer side trim that will utilize pieces already supplied by the OEM. | 1485 |
| 1680-0110 | Chassis Trim Package for a (2) door Freightliner series. | 1485 |
| 1680-0111 | Chassis Trim Package for a (4) door Freightliner. | 2967 |

| Item No. | Description | |
|---|---|---|
| 1680-0114 | Diamond plate trim package for a (4) door International. Includes a full length driver side and a (2) piece officer side trim that will utilize pieces already supplied by the OEM. | 2967 |
| 1680-0120 | Under the body there shall be equipped with a pair of receiver assemblies each with a removable swivel hoist ring. One each side of apparatus. The receivers shall be square steel tubing same size as a receiver for a Class III trailer hitch. Located behind the rear axle. | 3853 |
| 1680-0121 | Under the body there shall be equipped with a pair of 12000 lb receiver assemblies each with a removable swivel hoist ring or can be used with a Class III trailer hitch. One each side of apparatus. The receivers shall be locate in front of rear axle. Final location will depend on Engineering and driveline. 12v not included. | 3853 |
| 1680-0144 | Trailer hitch class V mounted rear. This hitch has under body support as needed. | 2832 |
| 1680-0146 | Glad Hands will be located at the rear of the truck near hitch for trailer hook-up. Glad Hands will be ordered on the chassis and be relocated to the rear of the body. | 313 |
| 1680-0148 | 625 HWH single step leveling system with provisions to operate a single slide out on an E-One chassis w/ leaf spring axles and no Air Dump. System will have 4 leveling jacks and will include controls hose kits and X-arms for slide out room. | 12823 |
| 1680-0149 | International 4400 Model Year and 2010 EPA Engine Surcharge. | 7314 |
| 1680-0150 | International 7400 Model Year and 2010 EPA Engine Surcharge. | 7553 |
| 1680-0151 | International 7600 Model Year and 2010 EPA Engine Surcharge. | 9673 |
| 1680-0152 | Freightliner Model Year and 2010 EPA Engine Surcharge. | 8268 |
| 1680-0155 | International 7400 Model Year Surcharge only | 1193 |
| 1680-0157 | International 4400 2011 Model Year Surcharge Only | 1099 |
| 1680-0161 | Chassis Trim Package for a (4) door Ford F650. | 4852 |
| 1680-0192 | Forward facing under front bumper winch receiver. Includes lowered height for center bumper mounted tray depth and electrical connection for portable winch application. Commercial chassis only. | 2077 |
| 1680-0200 | Diamond plate trim package for a (2) door International with driver's side fuel tank and Officer's side battery storage. Includes a full length driver side and an officer side trim that will utilize pieces already supplied by the OEM. | 1485 |
| 1680-0202 | Trailer hitch Class III mounted rear. Rear hitch will be constructed from the class IV due to weight in B1. | 2031 |
| 1680-0219 | Diamond plate trim package for a (2) door International. Includes a driver side trim that will utilize pieces already supplied by the OEM and a full length officer side. | 1485 |
| 1680-0231 | Insta-chain tire chain installation. Requires pre-wire option located in Cab Electrical. | 3154 |
| 1680-0237 | Deluxe Trim Package 2DR Extended Cab International. | 4547 |
| 1680-0239 | Tow eyes rear frame painted mounted low just above tailboard. | 614 |
| 1680-0244 | (2) way rear underbody Class III hitch receiver. Includes Class III trailer receivers (2) side facing- (1) each below rearward body compartments for portable winch receivers with electrical connection for winch. | 1766 |
| 1680-0247 | Trailer hitch Class III mounted rear optmized mounting to be in a raised mounting position. | 1098 |
| 1680-0252 | OEM chassis step package for Kenworth Commercial Chassis. Includes mounting plate for the battery charger receptacle and air inlet. | 175 |
| 1680-0254 | Officer side rear underbody Class III hitch receiver. Includes Class III trailer receiver (1) officer side facing side for portable winch receiver with an electrical connection for winch. | 1061 |
| 1680-0258 | Insta-chain tire chain installation. Includes 12 chain sytem. Requires pre-wire option located in Cab Electrical. | 3292 |
| 1680-0259 | Diamond plate trim package for a (2) door Navistar. Includes Bustin stepping surfaces a full length driver side and an officer side trim that will utilize pieces already supplied by the OEM. SS product only. | 1485 |
| 1680-0260 | Diamond plate trim package for a (4) door Navistar. Includes Bustin stepping surfaces a full length driver side and a (2) piece officer side trim that will utilize pieces already supplied by the OEM. SS product only. | 2967 |
| 1680-0261 | Diamond plate trim package for a (2) door Freightliner. Includes Bustin stepping surfaces a full length driver side and an officer side trim that will utilize pieces already supplied by the OEM. SS product only. | 1485 |
| 1680-0267 | Commercial chassis trim package upgrade to include smooth aluminum plate bolted in place on underside of gator grip over batteries. | 108 |
| 1680-0270 | Smooth plate trim package with black durabak finish for a (4) door International. Includes a full length driver side and a (2) piece officer side trim that will utilize pieces already supplied by the OEM will include modfication for booster reel(s). | 5994 |
| 1680-0272 | Plumb Vogel lube system to On-Spot tire chains. | 225 |
| 1680-0278 | Deluxe Trim Pkg 4DR Navistar with provision for booster reels. | 4852 |
| 1680-0280 | Diamond plate trim package for a (4) door International. Includes a full length driver and officer side trim package that will utilize pieces already supplied by the OEM. | 3080 |

| Item No. | Description | |
|---|---|---|
| 1680-0282 | Tow eyes rear below body painted. 1" thick material with 3" diameter hole staight down from chassis frame. | 824 |
| 1680-0283 | Delux diamond plate trim package for (2) door International. Includes full length driver side and officer side trim. | 2470 |
| 1680-0293 | Tow hooks front painted in the outboard position. | 311 |
| 1680-0295 | Trailer hitch Class I receiver mounted rear. | 671 |
| 1680-0297 | Diamond plate trim package for a (2) door International 7600. Includes a full length driver side and an officer side trim that will utilize pieces already supplied by the OEM. To be used with body mounted batteries. | 1485 |
| 1680-0298 | Deluxe Trim Package to be used with 4 door Freightliner M2 series chassis. | 4852 |
| 1680-0299 | Trim Package to be used with 4 door Freightliner M2 series chassis. | 2967 |
| 1680-0301 | Cord connector. Daniel Woodhead 3 wire NEMA 5-20 straight blade male located for block heater routed to driver side battery box. | 175 |
| 1680-0304 | Deluxe Trim Pkg 4DR Navistar with storage compartment (if applicable) on one side and provision for a reel on the other side. | 4852 |
| 1680-0309 | Muncie digital tachometer. Locate display in cab visible to driver. | 771 |
| 1680-0312 | On-Spot tire chains. Includes switch in cab. | 3267 |
| 1680-0314 | LINE-X package for 2 door commercial chassis: Includes chassis trim package all steps mounting plates for electrical components access doors for battery etc as applicable. | 669 |
| 1680-0315 | LINE-X package for 4 door commercial chassis: Includes chassis trim package all steps trim pack compartment doors mounting plates for electrical components access doors for battery etc as applicable. | 1364 |
| 1680-0322 | Diamond plate trim package for a (2) door International. Includes a full length driver side and an officer side trim that will utilize pieces already supplied by the OEM. For use with SCR and DEF. | 1485 |
| 1680-0323 | Diamond plate trim package for a (4) door International. Includes a full length driver side and officer side trim that will utilize pieces already supplied by the OEM. For International cabs with SCR and DEF. | 2967 |
| 1680-0324 | Deluxe diamond plate trim package for a (4) door International. Includes a full length driver side and officer side trim plus additional storage area(s). For use with International cabs with SCR and DEF. Storage compartments shall be provided below the side rear cab doors and shall include a hinged door with push-button latch and shall include lighting and wired through the cab door ajar indicator per NFPA as space permits. | 4852 |
| 1680-0326 | Side 9K Winch Receivers - frame rail height shall be provided. Two (2) winch receivers one (1) each side shall be located in line with the top of the frame rail ahead of the rear wheels. Each receiver position shall have its own pin. Winch receiver(s) shall be rated for a maximum of 9000 line pull pounds with a 2.0 to 1 straight line pull no-yield safety factor. 12VDC power and exterior doors not included. | 3275 |
| 1680-0333 | Diamond plate trim package for a (4) door Freightliner. Includes Bustin stepping surfaces a full length driver and officer side trim that will utilize pieces already supplied by the OEM. SS product only. | 2974 |
| 1680-0337 | OEM chassis step package for commercial chassis. Includes mounting plate for air and electrical options. | 175 |
| 1680-0340 | Leveling system on commercial chassis. 725 HWH single step leveling system to accommodate a Freightliner 114SD commercial chassis w/leaf spring axles and no Air Dump. System will have 4 leveling jacks and includes controls to be located inside the chassis cab on the center console to the officer side and to the rear. | 11375 |
| 1680-0341 | Diamond plate trim package for a (2) door Freightliner 114SD series. Includes a full length driver side and an officer side trim that will utilize pieces already supplied by the OEM. | 1485 |
| 1680-0342 | International 2016 On Board Diagnostics (OBD) surcharge - all models. | 371 |
| 1680-0345 | Tow eyes rear frame painted. Locate: B1 inside with eye plates spaced to best accommodate common sized towing hardware inside the compartment. | 879 |
| 1680-0346 | Deluxe Trim Pkg 4DR Freightliner with provision for One (1) booster reel under rear door and a compartment(s) under opposite rear cab door as applicable per chassis configuration. | 4852 |
| 1680-0348 | OEM chassis step package for MAN 4 door series. Includes mounting plate for the battery charger receptacle and air inlet. | 175 |
| 1680-0349 | Tow eyes rear below body painted. 1" thick material with 3" diameter hole staight down from chassis frame. For use as lifting eyes at rear of chassis. | 1956 |

| Item No. | Description | |
|---|---|---|
| 1680-0350 | Receivers side body 9K winch receivers - frame rail height shall be provided. Two (2) winch receivers one (1) each side shall be located in line with the top of the frame rail between rear tandem wheels. Each receiver position shall have its own pin. Winch receiver(s) shall be rated for a maximum of 9000 line pull pounds with a 2.0 to 1 straight line pull no-yield safety factor. 12VDC power and exterior doors not included. | 3593 |
| 1680-0354 | OEM Chassis supplied bright trim package for a (2) door Freightliner M2 series. Includes bright fuel tank and steps plus mounting plate for the battery charger receptacle and air inlet. | 1040 |
| 1680-0355 | OEM chassis supplied bright trim package for a (2) door International 4400 series. Includes a polished aluminum fuel tank bright finish stainless steel tank straps and steps plus polished aluminum DEF tank cover and a mounting plate for the battery charger receptacle and air inlet. (In place of standard steps). | 1328 |
| 1680-0356 | Rope tie off. Side underbody Rope Tie Off. Includes (2) side facing- rope tie off points (1) each below body located per engineering approval. Rating: 1000 lbs with 10:1 safety factor with straight line pull. | 2115 |
| 1680-0357 | Cutout(s) in the front bumper for plumbing option(s). For use with commercial chassis w/OEM chrome bumper only. Voids bumper warranty. | 87 |
| 1685-0072 | There shall be no E-One logos on cab seats. | 2352 |
| 1685-0073 | Control lanyard Y type or dual single pull as applicable for air horns on a commercial chassis. | 283 |
| 1685-0160 | E-One supplied/Van-Mor installed Swivel Pedestal Seat. Locate in cab command area in front of desk. If more then one seat offset them. | 582 |
| 1685-0163 | Swivel Pedestal Seat. Locate in cab command area in front of desk. If more than one seat offset them. The seat will include seat belts. Only when the seat is locked facing the driver's side can the seat be a transit seat. Seat color will match the interior of the front cab seats. | 2034 |
| 1685-0180 | On Scene Solutions Talon helmet holder (EA). Location: [#LOC]. | 452 |
| 1685-0189 | Identification plate GSA units. Located on inside of driver's door. Exact information and wording to be determined at time of final inspection. See specification. | 315 |
| 1685-0191 | Diamond plate cover for battery charger/air compressor. Includes louvers for ventilation. | 252 |
| 1685-0193 | Slide-out MDT mount officer cab dash. Requires severe duty dash w/MDT notch. | 1205 |
| 1685-0194 | Officer cab dash modification for Havis slideout MDT bracket. Not available with heat to feet or side roll protection. | 522 |
| 1685-0235 | Foot switch Linemaster model 632S to control air horns located [#LOC]. Includes 25 degree diamond plate bracket. | 133 |
| 1685-0240 | Slide-out MDT mount officer cab dash with dock. Requires severe duty dash w/MDT notch. Not available with heat to the feet. | 1653 |
| 1685-0259 | Jotto AK-12 Unit No. 6159 main control console for Ford chassis. Locate in cab centered between driver and officer. Includes all in-cab controls/switching and laptop mounting surface. | 1430 |
| 1685-0265 | Smooth plate cover(s) for battery charger and air compressor. These cover's shall be painted to match cab interior and shall include louvers as required for ventilation. | 252 |
| 1685-0289 | Foot switch Linemaster model 632S to control Q2B siren located [#LOC]. Includes 25 degree diamond plate bracket. | 133 |
| 1685-0293 | Command desk rear engine cover with a lift-up slanted desk top approximately 31.9" high off of floor (top of sloped writing surface) X 37.9" W (side to side centered about engine cover) X 25.2" L (front to rear). Desk to include hinged aluminum lid with Lexan overlay and gas shock trigger latches and storage compartment below. A 1" return lip shall be included on the lid. Desk to be mounted rearward of engine cover and 3X3 posts. Finish to match cab interior. | 2615 |
| 1685-0299 | Coat hook(s) stainless steel shall be provided in the cab. Location: on the rear wall as space permits. | 82 |
| 1685-0303 | Driver side "L" shape cab command desk with pull out drawer. Finish is to be swirled aluminum. No clear coating! | 3904 |
| 1685-0313 | Smooth plate cover for battery charger. Includes louvers for ventilation. Cover to match cab interior. | 252 |
| 1685-0356 | Writing surface cab dash finished same as cab interior. Location: Mount at final inspection. | 234 |
| 1685-0363 | Locking seat riser door. Officer seat riser door is to include a Simplex model 9672C-20-260-41 combination lock with satin chrome finish and black trim ring. Not available with air or electric seats. | 410 |
| 1685-0372 | Map pocket rear cab console aluminum plate to match console finish. | 118 |
| 1685-0374 | Stack-On model PS-514-12 gun safe. Location: centered on top of rear wall medical cabinet. | 353 |
| 1685-0375 | Center control console. Includes: VMUX panel mounting surface pitched at best angle to accommodate drivers position area for NFPA siren electrical and in-cab control switching (as applicable). Locate: In cab between driver and officer. | 2281 |

| Item No. | Description | |
|---|---|---|
| 1685-0395 | Panel utility. A aluminmu panel shall be bolted to the rear facing surface of the 3x3 vertical post inside the cab above the engine cover. Panel shall be 16 inches tall. Finish: shall be consistant with the cab interior. | 324 |
| 1685-0397 | Manual cab tilt pump handle located adjacent to pump with cable tether. | 60 |
| 1685-0406 | Center control console. Includes: area for NFPA siren electrical and in-cab control switching (as applicable). Console to be as large as possible. See photos on file with sales. Locate: In cab between driver and officer. | 2281 |
| 1685-0418 | Louvers additional for cab mounted center console. Locate louvers on lower area of sides for extra ventilation. | 391 |
| 1685-0433 | Smooth plate cover for air compressor. Includes louvers for ventilation. Cover to match cab interior. | 252 |
| 1685-0439 | Diamond plate cover for PharmGuard climate control system. Includes ventilation as requrired. | 252 |
| 1750-0006 | Map light flexible arm. Located [#LOC]. | 224 |
| 1750-0016 | Pump hourmeter in cab. | 152 |
| 1750-0019 | Battery charger Super Smart 110 volt 20 amp. | 466 |
| 1750-0021 | Battery charger Kussmaul model 1200 40 amp. | 783 |
| 1750-0022 | Battery charger Kussmaul 40 amp model 1200 with air compressor. | 2640 |
| 1750-0024 | Auto-Eject receptacle inlet 20 amp located [#LOC] with a [#COL] cover. | 637 |
| 1750-0025 | Super Auto-Eject receptacle inlet 30 amp 120 volt located [#LOC] and with a [#COL] cover. | 931 |
| 1750-0027 | Control push-button switch officer dash for Q2B siren. | 106 |
| 1750-0029 | Switch horn button two position DOT/air horn. | 111 |
| 1750-0032 | Switch horn button three position DOT/air horn/electronic siren. | 225 |
| 1750-0034 | Switch additional 12 volt/15 amp. Location and function: [#LOC]. | 225 |
| 1750-0040 | Battery charger Super Smart 220 volt 50 Hz 20 amp. | 466 |
| 1750-0043 | 12V power distribution module. Includes (6) battery hot and (6) switched hot circuits. 100 amps max (IATS). | 347 |
| 1750-0047 | The chassis shall be pre-wired for installation of tire chains. | 599 |
| 1750-0059 | Receptacle inlet 20 amp with a [#COL] cover. Location: [#LOC]. | 322 |
| 1750-0060 | Auto transfer switch 120 volt. Includes 8 place breaker box. Allows interior receptacles to be powered by either shore power or generator. | 846 |
| 1750-0061 | Control push-button switch officer dash for air horns. | 106 |
| 1750-0062 | Control push-button switch officer dash for siren. | 106 |
| 1750-0071 | Mount customer supplied antenna on cab roof. Location: [#LOC]. | 195 |
| 1750-0072 | 12 VDC (or 24VDC) electrical outlet in the cab wired battery hot. Location: [#LOC]. | 68 |
| 1750-0073 | Antenna base Tessco P/N 90942 (NMO Motorola Style - also called MATM style) on cab roof. Location: [#LOC]. | 105 |
| 1750-0082 | 12V power distribution module. Includes (6) battery hot and (6) switched hot circuits. 100 amps max (IATS). Location: [#LOC]. | 347 |
| 1750-0084 | Receptacle inlet 220 volt European "Schuko" style. Includes matching cord connector. Location: [#LOC] | 459 |
| 1750-0091 | Battery Saver Kussmaul model 091-195-12 wired to battery charger receptacle. | 774 |
| 1750-0094 | Battery charger / air compressor 220 volt Kussmaul Pump Plus HO. | 1663 |
| 1750-0113 | Dome Lts Red/White Incandescent. Package includes two lights mounted in the front of the cab. White light wire through door and light assembly mounted switch. Red light through light assembly mounted switch. | 313 |
| 1750-0115 | Master warning light switch to have a red cover (or bezel). | 43 |
| 1750-0117 | Auto eject receptacle inlet 15 amp 240 volt with a [#COL] cover. Location: [#LOC]. | 582 |
| 1750-0124 | Whelen 4'' round LED red door ajar light. Model 20R00FCR light with 2FLANGEC bezel. | 209 |
| 1750-0144 | Q2B brake switch to have a red cover (or bezel). | 43 |
| 1750-0149 | Control push-button switch on officer's dash for Q2B siren brake. | 106 |
| 1750-0161 | Air compressor Kussmaul model 091-9B-1 120V. | 1090 |
| 1750-0162 | Battery charger Kussmaul model 091-35/10 35 amp battery charger / 10 amp battery saver. | 915 |
| 1750-0170 | Commercial 4x4 headlight wiring for headlights below in/below the bumper in addition to factory headlights. Wire factory hood headlights to three (3) position switch labeled "Off Road Lights". | 517 |
| 1750-0173 | Rocker switch cover (or bezel) to be red. Location: [#LOC]. | 43 |
| 1750-0177 | Receptacle inlet 30amp twist lock with a [#COL] cover. Location: [#LOC]. | 617 |
| 1750-0186 | Dome Lts Red/White Incandescent additional. White light wire through door and light assembly mounted switch. Red light through light assembly mounted switch. Location: Centered rear of cab. | 160 |
| 1750-0187 | Auto drain Kussmaul model 091-9-089 120V. For use with air compressor 091-9B-1 only. | 231 |
| 1750-0190 | Dome Lts Red/White LED. Package includes two lights mounted in the front of the cab. White light wire through door and light assembly mounted switch. Red light through light assembly mounted switch. | 452 |

| Item No. | Description | |
|---|---|---|
| 1750-0224 | Engine Compartment Light LED for Freightliner Chassis (EA). | 270 |
| 1750-0225 | Engine Compartment Light for Freightliner Chassis (EA). | 144 |
| 1750-0230 | Control Push Button Switch for Air Horns on Officers Side of Console. | 106 |
| 1750-0252 | Kussmaul mounting plate model 091-9H for 12v air compressor. | 91 |
| 1750-0277 | Provide 30 amp radio circuit with 6' of wire Locate in Map Box for customer installed radios. | 131 |
| 1750-0284 | Switch additional guarded toggle. Location and Function: [#LOC]. | 225 |
| 1750-0314 | Battery charger Kussmaul model 12 HO PIM 20 amp. Includes model 091-189-12 indicator located adjacent to inlet receptacle. | 1561 |
| 1750-0324 | Air compressor Kussmaul model 091-9 12V. | 1048 |
| 1750-0325 | Pigtail minimum of 18" of wire for service of the battery charger and/or air compressor. | 54 |
| 1750-0326 | Auto transfer switch 120 volt. Includes 2 place breaker box. Allows interior receptacles to be powered by either shore power or generator. | 823 |
| 1750-0328 | Auto transfer switch 120 volt. Includes 8 place breaker box. Allows interior receptacles to be powered by either shore power or inverter. | 846 |
| 1750-0332 | Dome lights Red/White incandescent. Package includes two lights mounted in the front and two mounted in the rear of the cab Trucklite 80 series with push style on/off button (may be used with Ford chassis). White light wire through door and light assembly mounted switch. Red light through light assembly mounted switch. | 623 |
| 1750-0333 | Dome lights White incandescent. Package includes two lights mounted in the front and two mounted in the rear of the cab Trucklite 80 series with push style on/off button (may be used with Ford chassis). Lights wire through door and light assembly mounted switch. | 623 |
| 1750-0334 | Dome lights White incandescent. Package includes two lights mounted in the front of the cab Trucklite 80 series with push style on/off button (may be used with Ford chassis). Lights wire through door and light assembly mounted switch. | 312 |
| 1750-0336 | Whelen traffic advisor control head (model TRACTRL1A) shall be mounted in the center overhead panel. The control head shall be wired to the main power switching circuit. There shall be a 50' control cable (model TAPVC50) ran from the control head to the rear of the body coiled up for dealer supplied and installed traffic advisor. | 1119 |
| 1750-0337 | Garmin GSP 18X USB. May be mounted at E-ONE discretion on the cab roof within reach of cab 12VDC hot outlet(s). | 273 |
| 1750-0342 | Battery charger Kussmaul model 12 HO PIM 20 amp. Includes model 091-189-12 indicator located behind driver's door adjacent to exterior handrail. | 1561 |
| 1750-0343 | Battery charger E-ONE LPC 20. 120 volt inlet 20 amp output. | 671 |
| 1750-0344 | Battery charger E-ONE LPC 40. 120 volt inlet 40 amp output. | 1021 |
| 1750-0355 | Each 110 volt cab receptacle shall have a dedicated breaker within the breaker box. This is to provide each cab mounted receptacle (single outlet duplex etc. as applicable) with its own isolated circuit. | 297 |
| 1750-0360 | Auto-Eject receptacle inlet 30 amp 240 volt located [#LOC] and with a [#COL] cover. | 931 |
| 1750-0365 | Auto transfer switch 120 volt. Includes 8 place breaker box. Provides for all interior receptacles and Four (4)interior 110v fluorescent lights to be powered by shore power or generator. | 846 |
| 1750-0368 | Dome Lts Red/White 4" LED (6). Lights to be located two front and four rear. White light wired through door and light assembly mounted rocker switch. Red light through light assembly mounted rocker switch. | 2518 |
| 1750-0369 | Guard. On-Spot activation switch shall have a red flip up safety guard. The switch shall de located on the driver side overhead panel offset to the officer side as far as possible. | 57 |
| 1750-0370 | Engine hourmeter in cab. | 176 |
| 1750-0372 | 12 VDC (or 24VDC) electrical outlet in the cab wired battery hot with 14AWG at each seated position. Outlets are shared within the same circuit. | 269 |
| 1750-0379 | Auto transfer switch 120 volt. Includes 12 place breaker box. Provides for all 110v interior receptacles and up to four (4) interior fluorescent lights to be powered by shore power or generator. | 1196 |
| 1750-0392 | Battery charger Kussmaul 75 amp model 091-149-12 with 091-9 air compressor. | 3910 |
| 1750-0394 | Control push button switch for Q2B on officers side of console. | 106 |
| 1750-0396 | Control push-button switch on officer's overhead for Q2B siren brake. | 106 |
| 1750-0399 | Control push-button switch driver side of center dash upper tier for Q2B siren. | 106 |
| 1750-0405 | Battery charger Kussmual model 091-200-12-194-WT-RD. 120 Volt 40 Amp output includes water tight display mounted adjacent to inlet. | 1957 |
| 1750-0406 | The air horn(s) shall not be included within the Multiplex system (separate switching from Multiplex display required). | 430 |
| 1750-0412 | Kussmaul digital battery display model 091-194-IND-WT-RD in place of standard. | 383 |
| 1750-0414 | Warning light Whelen M6R series Linear Super LED (PR) red. Location: interior of canopy doors wired through each door ajar switch only. | 793 |

| Item No. | Description | |
|---|---|---|
| 1750-0418 | Conduit flexible 1" with connectors. Location: Bottom of cab mounted center console to forward corner of counter top on driver side of body. | 336 |
| 1750-0429 | Dual USB charging ports in the cab wired battery hot. Location: [#LOC]. | 77 |
| 1750-0433 | Battery charger Kussmaul LPC 80. 120 volt inlet 80 amp output. | 1873 |
| 1750-0440 | Switch horn button three position DOT/air horn/electronic siren. Wired through multiplex display screen. | 225 |
| 1750-0441 | Battery charger Kussmaul model EV40 40 amp. | 1700 |
| 1750-0443 | Dome Lts Red/White Whelen model 60CREGCS LED. Package includes two lights mounted in the front of the cab. White light wired through door and light assembly switch. Red light through light assembly switch. | 618 |
| 1750-0453 | Auto transfer switch 120 volt. Includes 12 place breaker box. Allows interior receptacles to be powered by either shore power or generator. | 890 |
| 1750-0454 | Courtesy light for driver and officer located on front of risers wired through marker lights. Whelen model 0SR00SCR light. | 283 |
| 1750-0458 | Quad bezels (4) black ipos. | 284 |
| 1750-0465 | Receptacle inlet 50A 230V located in the air compressor compartment with cover and manual 3 pole 100A transfer switch. Allows compressor to be powered by either shore power or generator. | 3392 |
| 1750-0471 | Auto-Eject receptacle inlet 20 amp located rear of body driver side with a Yellow cover. Receptacle wired to roof top A.C. | 637 |
| 1750-0475 | Control push-button switch center dash upper tier offset to officer for Q2B. | 106 |
| 1750-0478 | Battery charger Kussmaul model 091-216-40/20 40 amp battery charger / 20 amp battery saver. | 2213 |
| 1750-0479 | On-Spot activation switch to have a red cover (or bezel). | 43 |
| 1750-0480 | Auto-Eject dual receptacle inlet; 30 amp 120V with air auto eject located [#LOC] with a [#COL] cover. | 1677 |
| 1750-0481 | Auto-Eject receptacle inlet 20 amp wired to roof top AC located [#LOC] with a [#COL] cover. | 637 |
| 1750-0482 | Control push-button switch officer switch panel for Q2B siren. | 106 |
| 1750-0483 | Control push-button switch on officer's switch panel for Q2B siren brake. | 106 |
| 1750-0484 | Control push-button switch officer switch panel for siren. | 106 |
| 1750-0485 | Control push-button switch officer switch panel for air horns. | 106 |
| 1750-0486 | Battery charger Kussmaul model Pump Plus 1200 40 amp. | 1592 |
| 1750-0490 | Lateral "G" Alert system with Audible and Visual warnings. | 4744 |
| 1750-0491 | The chassis shall be pre-wired for installation of tire chains. Includes 12 volt rocker lock-out/safety style switch. | 599 |
| 1750-0495 | Kussmaul bluetooth module model 091-226 wired to cab speakers. Located in cab accessible to driver. | 385 |
| 1750-0498 | Aerial PTO switch to have a red cover (or bezel). | 43 |
| 1750-0509 | Battery charger Iota model DLS-75 75 amp. | 841 |
| 1750-0510 | Auto-Eject receptacle inlet 20 amp located below the driver's door with a red cover. Receptical to be wired to: Transfer switch/sub breaker box refrigerator and module interior receptacles. | 637 |
| 1750-0511 | Auto-Eject receptacle inlet 20 amp located below the driver's door with a red cover. Receptical to be wired to battery charger only. | 637 |
| 1750-0513 | The commercial chassis shall be pre-wired for installation of tire chains. Installed by chassis OEM. | 599 |
| 1750-0515 | Flexible 1" conduit with connectors. Location: Center cab dash to pump panel area. | 400 |
| 1750-0516 | Auto drain Kussmaul model 091-9-086 12V. For use with air compressor 091-9-12V only. | 231 |
| 1750-0520 | Conduit flexible 2" with connectors. Includes (3) three pull wires labled 1 thru 3 each end. Location: Bottom of cab mounted center console to body mounted electronics rack floor area. | 336 |
| 1750-0521 | Deutsch connector in center cab dash. Wired as follows: blue wire: hot master warning red wire: hot park brake applied purple wire: hot left turn signal and green wire: hot right turn signal. | 567 |
| 1750-0525 | Light Whelen model PSR00FRR LED red qty one (1). A horizontally mounted flashing strip light shall be provided on the inside rear body entry door panel below the window. Wire through door switch. | 220 |
| 1750-0526 | Dome Lts Red/White Incandescent. Package includes two lights mounted in the front of the cab. White light wire through door and light assembly mounted switch. Red light through light assembly mounted switch. | 360 |
| 1750-0529 | Air compressor Kussmaul model 091-9-12V-HP. | 1164 |
| 1750-0531 | Control push-button switch center lower dash for Q2B siren. | 106 |
| 1750-0532 | Control push-button switch on center lower dash for Q2B siren brake. | 106 |
| 1750-0540 | Dual USB charging ports in the cab wired through ignition. Location: [#LOC]. | 77 |
| 1750-0541 | Kussmaul bluetooth module model 091-226 wired to cab speakers. Located in officer overhead. | 385 |
| 1750-0550 | Control push-button switch center dash upper tier offset to officer for Q2B brake. | 106 |
| 1750-0552 | Battery charger Iota model DLS-75 75 amp with IQ4 Smart Controller. | 878 |
| **RESCUE BODY** | | |

| Item No. | Description | |
|---|---|---|
| 3085-0013 | Standard EOD Van-Mor Pricing Only. | 79842 |
| 3085-0014 | Van Mor will provide and install the following: Interior for comand area awnings and electrical for command desks. Please see long spec for details. | 84375 |
| 3085-0021 | Four Zico KD-ULLH SCBA brackets will be located on the officer side in the robot area. Brackets will be forward on the officers side wall in the robot area and be staged two high by two wide. | 955 |
| 3085-0023 | Standard VanMor 21' body EOD interior. Please see VanMor Quote Quote 43514 Norfolk Interior Rev A in the truck folder for extended details. | 87654 |
| 3085-0024 | See VanMor Spec for full details of quote. NOTE: E-1 shall provide the unit with all pre-wiring and connectors installed to outlet locations prior to delivery to VanMor. | 50124 |
| 3085-0025 | VanMor content. See Spec for details. Customer responsible for satellite and cellular carrier / provider activation and service fees. | 137816 |
| 3085-0026 | Table top conference room table top. Use for SO140170 Sarasota only. A aluminum conference room table top shall be provided by E-1 and installed by VanMor. Design shall include placement of the department supplied LOGO onto the table top. Finish: sanded and swirled aluminum with protective clear coating. Locate: to be located and installed by VanMor at rear of body in conference room per E-1 drawing. | 2544 |
| 3090-0025 | Rear wheel fender panels shall be bolt on 10 gauge 304L stainless steel unpainted. Black rubber fenderettes and bolt-on 16 gauge 304L stainless steel inner wheel well liners. (4) non-locking SCUBA bottle compartments and (2) fuel filler door assemblies. | 3475 |
| 3090-0037 | Rear wheel fender panels shall be bolt on 10 gauge 304L stainless steel unpainted. Black rubber fenderettes and bolt-on 16 gauge 304L stainless steel inner wheel well liners. (2) non-locking SCUBA bottle compartments (2) locking hydraulic floor jack compartments and (2) fuel filler door assemblies. | 3970 |
| 3092-0010 | Extend diamond plate floors out to door opening. Location is [#LOC]. Extruded aluminum. | 261 |
| 3092-0011 | 16' Non Walkin Rescue Body 3/3/5/3 EA | 38923 |
| 3092-0012 | 17' Non Walkin Rescue Body 3/3/5/4 EA | 41356 |
| 3092-0013 | 18' Non Walkin Rescue Body 3/4/5/4 EA | 43789 |
| 3092-0014 | 19' Non Walkin Rescue Body 4/4/5/4 EA | 46221 |
| 3092-0015 | 20' Non Walkin Rescue Body 4/4/5/5 EA | 48654 |
| 3092-0017 | 21' Non Walkin Rescue Body 4/5/5/5 EA | 51087 |
| 3092-0018 | 22' Non Walkin Rescue 2 Piece Body 5/5/5/5 EA | 61122 |
| 3092-0019 | 24' Non Walkin Rescue Body 4/4/4/5/5 EA | 67620 |
| 3092-0020 | 26' Non Walkin Rescue Body 5/5/4/5/5 EA | 69727 |
| 3092-0021 | 22' Rescue Body 5/5/5/5 EA | 53519 |
| 3092-0022 | 19' Air and Light Rescue Body 4/4/5/4 EA. | 46221 |
| 3092-0027 | 12' Non Walkin Rescue Rear Module 3/5/3 EA | 46704 |
| 3092-0028 | 13' Non Walkin Rescue Rear Module 3/5/4 EA | 47198 |
| 3092-0029 | 14' Non Walkin Rescue Rear Module 4/5/4 EA | 47689 |
| 3092-0030 | 15' Non Walkin Rescue Rear Module 4/5/5 EA | 47940 |
| 3092-0031 | 16' Non Walkin Rescue Rear Module 5/5/5 EA | 48184 |
| 3092-0032 | 17' Non Walkin Rescue Rear Module 3/4/5/3 EA with tandem axles. | 56250 |
| 3092-0033 | 18' Non Walkin Rescue Rear Module 3/4/5/4 EA with tandem axles. | 56745 |
| 3092-0034 | 19' Non Walkin Rescue Rear Module 3/4/5/5 EA with tandem axles. | 56990 |
| 3092-0036 | L3/R3 will not be transverse due to B1depth. B1 will run to the forward wall of L3/R3. | 1289 |
| 3092-0037 | 20' Non Walkin Rescue Body 4/4/5/5 with a 64" compartment interior opening. | 59618 |
| 3092-0038 | Area under staircase will be transverse in L4/R4. | 1289 |
| 3092-0040 | Extend floors out to door opening. Location is [#LOC]. Stainless steel. | 261 |
| 3092-0042 | Cutout and bracing for a Eagle Side Winder fill station will be located in [#LOC]. | 635 |
| 3092-0043 | 22' Non Walkin Rescue Body 5/5/5/5 EA | 53519 |
| 3092-0044 | Compartment floor in [#LOC] to be 3/16 smooth plate aluminum. | 112 |
| 3092-0045 | B1 is deleted and the area behind L5/R5 will be transverse. | 1289 |
| 3092-0048 | 14' Non Walkin Rescue Rear Module 3/2.6/4/3. Light rescue only. Includes spring hanger notches if needed. | 46300 |
| 3092-0049 | 15' Non Walkin Rescue Rear Module 4/5/5 EA. Hillsborough only. | 56344 |
| 3092-0050 | 14' Air/Light Rescue Body 5/5/3 EA. Lower section will be approx 30 inches. Upper section will be open except L3 R3 and B1. There will also be an indent directly in front of B1 between L3 and R3 at least 13.5" deep by 36" wide to allow the cascade system to fit. | 34116 |
| 3092-0051 | Compartment depth in [#LOC] will be 10" and the floor over the frame rails will be raised 20" due to pump. | 1879 |
| 3092-0052 | 22' Non Walkin Rescue Body 5/5/5/5. L1/R1 will be the only transverse compartment. | 61122 |
| 3092-0053 | 17' stainless steel walk-around rescue body left and right sides. | 48688 |
| 3092-0054 | 19' stainless steel walk-around rescue body left and right sides. | 51527 |
| 3092-0055 | 21' stainless steel walk-around rescue body left and right sides. | 54957 |

| Item No. | Description | |
|---|---|---|
| 3092-0056 | 24' stainless steel walk-around tandem axle rescue body left and right sides. | 62102 |
| 3092-0057 | Ramp will be located in a compartment located under L3. This compartment shall have a painted door with thumb latches and the floor of the compartment shall have an easy slide material in place. | 2962 |
| 3092-0058 | Compartment depth in [#LOC] will be 9" and the floor over the frame rails will be raised 20" due to pump. | 1879 |
| 3092-0059 | Compartment depth in [#LOC] will be 10" and the floor over the frame rails will be raised 22" due to pump. | 1879 |
| 3092-0066 | 18' Non Walkin Rescue Body 3/4/5/4 EA with 75" high compartment opening. | 51667 |
| 3092-0068 | 12' Non Walkin Rescue Rear Module 4/4/2.5 EA. Light rescue only. Includes spring hanger notches if needed. | 46704 |
| 3092-0070 | 25' Non Walkin Rescue Body 4/5/4.5/4.5/5 EA | 73658 |
| 3092-0071 | 18' Non Walkin Rescue Body 3/4/5/4 EA | 48887 |
| 3092-0073 | 17' stainless steel walk-in rescue body left and right sides with 44-44-60-56 compartment dimensions. Note: In order to obtain a transverse lower forward L1/R1 you must select a U-shaped counter top from the body interior. | 51173 |
| 3092-0074 | 19' stainless steel walk-in rescue body left and right sides with 56-56-60-56 compartment dimensions. Note: In order to obtain a transverse lower forward L1/R1 you must select a U-shaped counter top from the body interior. | 53610 |
| 3092-0075 | 21' stainless steel walk-in rescue body left and right sides with 44-44-48-60-56 compartment dimensions. Note: In order to obtain a transverse lower forward L1/R1 you must select a U-shaped counter top from the body interior. | 56045 |
| 3092-0076 | 24' stainless steel walk-in tandem axle rescue body left and right sides with 56-56-60-60-56 compartment dimensions. Note: In order to obtain a transverse lower forward L1/R1 you must select a U-shaped counter top from the body interior. | 63966 |
| 3092-0077 | 17' stainless steel walk-around partial transverse rescue body left and right sides. | 51173 |
| 3092-0078 | 20' stainless steel walk-in rescue body left and right sides with 60-60-60-60 compartment dimensions. Note: In order to obtain a transverse lower forward L1/R1 you must select a U-shaped counter top from the body interior. | 54827 |
| 3092-0082 | 21' Non Walkin Rescue Body 5/5/5/4 EA | 53606 |
| 3092-0085 | 16' Non Walkin Rescue Body 3.5/2.5/5/3 EA | 39429 |
| 3092-0086 | 24' Non Walkin Rescue Body 4/4/4.5/4.5/5 EA with modified forward module max door opening height. | 71352 |
| 3092-0090 | 22' Non Walkin Rescue Body 5/5/5/5 EA with provision to accommodate for 270 Gal water tank between L2/R2. | 62650 |
| 3092-0091 | 17' Non Walkin Rescue Body 6.3/5/5 EA. Design accommodates water tank mounting structure. Note: Tank access requires seperate sales code. | 44827 |
| 3092-0092 | Compartment floor raise in L1/R1 shall be approx 15" to accommodate water pump and plumbing. Compartment depth in L1 shall be 10" deep. | 1879 |
| 3092-0093 | 18' Non Walkin Rescue Body 3/4/5/4 EA. Body design includes provisions to accommodate a 200 gallon water tank located between L2/R2. | 50625 |
| 3092-0094 | 17' Non Walkin Rescue Body 3/3/5/4 EA. Includes modified height to be 2 inches shorter than standard. | 43190 |
| 3092-0095 | Compartment depth in [#LOC] will be 10" and the floor over the frame rails will be raised 10" due to pump. | 1879 |
| 3092-0096 | 20' stainless steel walk-around rescue body with 60"-60"-60"-60" left and right side compartments. | 56430 |
| 3092-0097 | 19' stainless steel walk-in rescue body left and right sides with 56-56-60-56 compartment dimensions. Body designed for walk-in from cab in addition to the rear. | 53041 |
| 3092-0098 | 16' Non Walkin Rescue Body 3.2/3/5/2.7 EA. Includes a full available interior compartment height modification. Locate: L1/R1 & L2/R2. | 42554 |
| 3092-0099 | 18' Non Walkin Rescue Body 3/4/Z/3/4 EA. Design includes: ZICO ladder lift on each side of body located between L2/L3 & R2/R3. | 65272 |
| 3092-0100 | 20' Non Walkin Rescue Body 4/4/5/5 EA. Body sized to accommodate Fire Shop style SCBA storage in wheel well area. | 53049 |
| 3092-0101 | 22' Walkin Rescue Body with 3/5/4. Modified 13' Non Walkin Rescue with addition of 8 foot walkin module added to front. Includes: Walk in module modification IPO L1/R1 and L2/R2 with officer side entry. Interior Walk in Construction: The lower interior side walls shall be constructed of 1/8" (.125) fire apparatus quality diamond plate up to 40 inches above the module floor. The ceiling area and upper side wall finish shall be white Kemply plywood. The interior side walls of the body above the exterior compartments and the ceiling area shall be insulated with 1" solid styrofoam insulation. The walk-in standing area floor shall be constructed of 3/16" (.187) fire apparatus quality embossed diamond plate. | 84527 |

| Item No. | Description | |
|---|---|---|
| 3092-0102 | Sloped compartment floor. Compartment floor to be overlayed with a smooth aluminum plate that is sloped aprox 2 inches downward from the door opening to back of compartment in [#LOC]. Construction to be 3/16 aluminum. | 133 |
| 3092-0103 | 18' Non Walkin Rescue Body 5/2/5/4 EA. Includes provision to accommodate deep B1option extending to forward L3/R3 bulkhead. Deep B1 compartment option required with this option. | 51747 |
| 3092-0104 | Body Rear. 11' Non Walkin Rescue Rear Body 2.2/5/3.6 EA. Design for MAN chassis. Body width to be 93.5 inches. | 43630 |
| 3092-0105 | 20' Non Walkin Rescue Body 4/4/5/5 EA. Includes: L3/R3 raised 2 inches to accommodate Fire Shopp SCBA storage. | 54318 |
| 3092-0106 | 16' Non Walkin Rescue Body 3/3/5/3 EA with provision to accommodate for 300 Gal water tank between L3/R3. | 40233 |
| 3092-0107 | 20' Non Walkin Rescue Body 4/4/5/5 EA. Application with 4x4 chassis and 26 inch main frame. | 48654 |
| 3092-0108 | Floor extension. Extend body compartment transverse floor to door opening. Finish: smooth sanded aluminum. Location is [#LOC]. | 292 |
| 3092-0109 | Floor body compartment transverse floor to be smooth aluminum in place of diamond plate. Finish: smooth sanded aluminum. Location is [#LOC]. | 53 |
| 3094-0000 | Perimeter roof with officer side entrance L shape catwalk. Extruded aluminum. | 3770 |
| 3094-0001 | Perimeter roof with center entrance I shape catwalk. Extruded aluminum. | 3492 |
| 3094-0002 | Diamond plate flat roof. Extruded aluminum. | 3089 |
| 3094-0003 | Upper body height 15". Extruded aluminum. | 3797 |
| 3094-0004 | Upper body height 19". Extruded aluminum. | 4482 |
| 3094-0005 | Upper body height 23". Extruded aluminum. | 5949 |
| 3094-0012 | Roof compartments for 16' perimeter roof body. Extruded aluminum. | 8625 |
| 3094-0013 | Roof compartments for 17' perimeter roof body. Extruded aluminum. | 8994 |
| 3094-0014 | Roof compartments for 18' perimeter roof body. Extruded aluminum. | 9361 |
| 3094-0015 | Roof compartments for 19' perimeter roof body. Extruded aluminum. | 9728 |
| 3094-0016 | Roof compartments for 20' perimeter roof body. Extruded aluminum. | 10095 |
| 3094-0017 | Roof compartments for 21' perimeter roof body. Extruded aluminum. | 10462 |
| 3094-0018 | Roof compartments for 22' perimeter roof body. Extruded aluminum. | 10831 |
| 3094-0019 | Roof compartments for 24' perimeter roof body. Extruded aluminum. | 11199 |
| 3094-0020 | Roof compartments for 26' perimeter roof body. Extruded aluminum. | 11567 |
| 3094-0021 | Perimeter roof with center staircase entrance Straight shape catwalk. Extruded aluminum. | 6122 |
| 3094-0079 | The interior height of walk-in area is approximately 80". | 3725 |
| 3094-0080 | Roof compartments and pan for perimeter roof on the rear combo module. Extruded aluminum. | 8692 |
| 3094-0081 | Roof compartments for perimeter roof on the rear combo module. Extruded aluminum. | 9120 |
| 3094-0082 | Roof compartments for 26' perimeter roof body w/ 5 roof compartments. Forward most compartment will be 30" wide. Extruded aluminum. | 11567 |
| 3094-0084 | Roof compartments for 20' perimeter roof body. Extruded aluminum. Forward driver side roof compartment will be shortened to fit light tower and officer side will fit 2 simo pumps and Dia plt box. | 10358 |
| 3094-0086 | There will be a side staircase on the officer side at the rear. Stair case will lead up to catwalk area. | 3879 |
| 3094-0087 | The interior height of walk-in area is 77". | 1863 |
| 3094-0089 | Roof compartments for 17' perimeter roof body. 5 roof compartments and 1 Speedy Dry compartment. 1 across the front offset to driver side (will take the place of the dunnage pan). Speedy Dry compartment will be located next to it on officer side. 2 more compartments each side of Walkway. Each roof compartment will have handrail style pull handles bolted to the top of the lid. Each handle will be approx 25" long except for the oil dry it will be approx 11" long. | 13438 |
| 3094-0090 | Embossed diamond plate flat roof. Extruded aluminum. | 3089 |
| 3094-0091 | Smooth plate flat roof. Roof will be painted with non skid paint. Light rescue body only. | 1822 |
| 3094-0094 | Upper body height 13". Extruded aluminum. Panel will be 10" above the compartments for light mounting. | 2751 |
| 3094-0096 | Diamond plate flat roof. Light rescue body only. | 1653 |
| 3094-0098 | Roof compartments and pan for perimeter roof on the rear combo module. For Hillsborough only. There will be 2 roof compartments on the body. Officer side will run from front of NWI module to just ahead of opening for ladder access. Drivers side will run from rear of truck to approx 56 inches from front of NWI module. A pan area holding the Generator will be in front of Driver side Compartment. | 8625 |
| 3094-0099 | Roof compartments for 22' perimeter roof body with a fifth compartment on the forward officers side for a light tower and the drivers side shall be full length. Extruded aluminum. | 11075 |
| 3094-0100 | Door over Light Mast will be air actuated and Light tower will not extend unless lid is open. Lid shall be plumbed to accessories tank. | 1362 |
| 3094-0101 | Perimeter roof with center rear entrance from rear ladder. Stainless steel rescue body. | 19519 |

| Item No. | Description | |
|---|---|---|
| 3094-0102 | Perimeter roof with center rear staircase entrance straight shaped catwalk. Stainless steel rescue body. | 19519 |
| 3094-0103 | Roof compartments for 17' perimeter roof body. Stainless steel rescue body. | 4733 |
| 3094-0104 | Roof compartments for 19' perimeter roof body. Stainless steel rescue body. | 5916 |
| 3094-0105 | Roof compartments for 21' perimeter roof body. Stainless steel rescue body. | 7098 |
| 3094-0106 | Roof compartments for 24' perimeter roof body. Stainless steel tandem axle rescue body. | 8282 |
| 3094-0107 | Roof compartments for 19' perimeter roof body. Dunnage area shall be stretched to 84" to hold all the equipment needed. There will be two roof compartments one each side. Roof compartments will be shortened due to the 84" dunnage area. | 9728 |
| 3094-0109 | A roof compartment to store large items such an inflatable boat and Haz Mat equipment. (1) lift up door with heavy-duty gas struts butterfly latches and a chrome plated handle shall be supplied to lift the door. | 3049 |
| 3094-0110 | Roof compartments for 18' perimeter roof body. Driver and officer side roof compartment to be transverse front to rear. Extruded aluminum. | 9477 |
| 3094-0111 | Roof compartments for 19' perimeter roof body. Extruded aluminum. Driver side compartments to be transverse front to back officer side will be seperate compartments. | 10032 |
| 3094-0112 | Upper body height 12" additional for light rescue. Extruded aluminum structure to cover perimeter of the body. Officer rear to have an opening to allow for access to top of body. The structure shall be integral to the body and there shall be a handrail located at the rear to the driver side of the opening to allow for assistance to the top of the roof. Structure to be painted job color. | 2833 |
| 3094-0113 | (5) Five roof compartment design for 25' perimeter roof body. Extruded aluminum. U shape style design | 13694 |
| 3094-0114 | Embossed diamond plate flat roof for 17' WI rescue body. SS product. | 10849 |
| 3094-0115 | Embossed diamond plate flat roof for 19' WI rescue body. SS product. | 11943 |
| 3094-0116 | Embossed diamond plate flat roof for 21' WI rescue body. SS product. | 13037 |
| 3094-0117 | Embossed diamond plate flat roof for 24' WI rescue body. SS product. | 14132 |
| 3094-0119 | Full length roof compartments and full length center walkway for 17' perimeter roof body. Stainless steel rescue body. | 4875 |
| 3094-0120 | Perimeter roof with center rear entrance from rear ladder. Stainless steel rescue body. Eliminate front upper transverse storage area. | 20105 |
| 3094-0121 | Embossed diamond plate flat roof/side body header for 17' walk-around rescue body with front transverse storage pocket. SS product. | 10849 |
| 3094-0122 | Embossed diamond plate flat roof/side body header for 17' walk-around rescue body with 68" long full width front transverse storage pocket. SS product. | 11203 |
| 3094-0123 | Embossed diamond plate flat roof for 20' WI rescue body. SS product. | 12490 |
| 3094-0124 | Roof compartments for 18' perimeter roof body. Extruded aluminum. Non-standard pan area. | 9186 |
| 3094-0125 | Roof compartments for 18' perimeter roof body. Compartments each side of body to be one full length box with out divisions. Material: extruded aluminum. | 10321 |
| 3094-0126 | Door at catwalk entrance. Door will swing in to open have an automatic close device and lock shut when closed. Finish to match rear of body. | 660 |
| 3094-0127 | Roof compartments for 22' perimeter roof body. Extruded aluminum. Sized to accommodate ASME storage bottles in rear compartments (6) bottles total (3) per side. | 10831 |
| 3094-0128 | Upper body height 29". Extruded aluminum. | 7334 |
| 3094-0129 | Roof compartments for perimeter roof on the rear 21' combo module. Compartments include ROM V4 lighting. The driver side forward roof box shall be shortened to provide for locating a generator in a dunnage pan. | 11665 |
| 3094-0130 | Roof compartments for 22' perimeter roof body. Extruded aluminum. Compartments to be full available length of roof and include ROM V4 LED lights IPO STD. | 17404 |
| 3094-0131 | Entry. Modify upper body entry to span from driver side of roof top boxs to officer side of body. | 676 |
| 3094-0132 | Perimeter roof with center entrance I shape catwalk to run full length of body. Extruded aluminum. | 3492 |
| 3094-0133 | Upper body height 33". Extruded aluminum. | 7454 |
| 3094-0134 | Roof compartments for 17' perimeter roof body. Full length roof top compartments. Extruded aluminum. | 12622 |
| 3094-0135 | Roof compartments for 18' perimeter roof body. Extruded aluminum. Full length compartment design with space in front corner to accommodate generator on officer side. | 12622 |
| 3094-0136 | Upper body height 17". Extruded aluminum. | 4932 |
| 3094-0137 | Roof compartments for 20' perimeter roof body. Stainless steel rescue body. | 6297 |
| 3094-0138 | Roof compartments for 19' perimeter roof body. Stainless steel rescue body. Extra compartment at front of dunnage area for total of (5). | 7049 |
| 3094-0139 | Roof compartments for 17' perimeter roof body. Stainless steel rescue body. Includes TecNiq T440 lighting. | 4679 |

| Item No. | Description | |
|---|---|---|
| 3094-0140 | Perimeter roof extruded aluminum. Parapet design to accommodate installation of ZICO hydraulic ladder lift on driver and officer side of body. | 3770 |
| 3094-0141 | Roof compartments for 20' perimeter roof body. Extruded aluminum. Sized to best accommodate DOT breathing air storage bottles in forward boxes. | 10095 |
| 3094-0142 | Roof compartments for 13' perimeter roof body. Extruded aluminum. Compartments to run full length of catwalk on rear body.Top access doors to be 10 feet long and as far aft as possible. | 9148 |
| 3094-0144 | Roof compartments for 18' perimeter roof body. Extruded aluminum. Five (5) compartment to be provided. Three (3) on driver side and two (2) officer side. Compartments to span full length of driver side. | 11326 |
| 3094-0145 | Roof compartments for perimeter roof on custom 11' rear body. Extruded aluminum. | 8538 |
| 3094-0146 | Roof compartments for 20' perimeter roof body. Extruded aluminum. Boxes to be designed without division inside between forward and aft compartments. Compartments to have 2 lids each side of body. Design includes (2) two dividers 12 inches tall with floor mounted tracks providing for and aft adjustability on each side of body. | 10532 |
| 3094-0147 | Perimeter roof with officer side catwalk to accommodate access from rear body to forward pan area. Desigh specific to Coteau Q71874 / SO140325. Construction to be consistent with body roof. Locate: officer side. | 6101 |
| 3094-0148 | Roof compartments for 20' perimeter roof body. Extruded aluminum. Compartments to span full length of upper body each side of catwalk. | 14456 |
| 3094-0149 | Roof compartments for 20' perimeter roof body. Extruded aluminum. Compartments to span full length of upper body each side of catwalk. Design includes Stainless Steel D-ring typ latches IPO standard latches. | 14456 |
| 3094-0151 | Roof compartments (5) for 20' perimeter roof body. Extruded aluminum. Includes box located at front of body spanning side to side. | 14775 |
| 3096-0000 | Rescue Rear Body Full Height Compartment B1 | 1642 |
| 3096-0001 | Rescue rear body B1 upper compartment and B2 lower tool compartment with smooth plate drop down door. | 1750 |
| 3096-0002 | Rescue Rear Body Staircase Compartments with 10 inch deep steps. | 2314 |
| 3096-0003 | Rescue rear body full height compartment with 3 compartments above the full height compartment. | 3208 |
| 3096-0004 | 10" Tailboard Bolt-On With Bracing Rescue Style. | 586 |
| 3096-0005 | 12" Tailboard Bolt-On With Bracing Rescue | 612 |
| 3096-0006 | 14" Tailboard Bolt-On With Bracing Rescue | 632 |
| 3096-0007 | 16" Tailboard Bolt-On With Bracing Rescue | 653 |
| 3096-0008 | 18" Tailboard Bolt-On With Bracing Rescue | 677 |
| 3096-0010 | Rescue Rear Body Full Height Compartment | 2628 |
| 3096-0011 | Rescue Rear Body Upper Compartment and Lower Tool Compartments | 2915 |
| 3096-0012 | Rescue Rear Body Staircase Compartments | 4502 |
| 3096-0013 | Rescue Rear Body Walk-In. Location: B1 | 1483 |
| 3096-0015 | Rescue Rear Body Staircase Compartments for use with 64" high side compartment openings and ladder storage big enough to hold a 24` 2 section and a 14` roof ladder. B1 compartment door and access plates should be Dia Plate. | 1928 |
| 3096-0016 | Rescue Rear Body Full Height Compartment. Compartment will be 60" wide. | 1642 |
| 3096-0017 | Rescue Rear Body No Compartment. Rear end will have no rear compartment. | 1551 |
| 3096-0018 | There will be a notch in the tailboard for the hitch out the rear. | 235 |
| 3096-0020 | Rescue Rear Body with single compartment above the frame rails and two compartments above it. The single compartment will run to under the two upper compartments. The two upper compartments will be equal in size. Light rescues only. | 1647 |
| 3096-0021 | Rescue Rear Body Full Height Compartment. Rear compartment will be 36" wide x 26" deep. This compartment will intrude into the open area of the upper compartments. | 1642 |
| 3096-0022 | There will be a notch in the tailboard for access to B1 from the ground. This notch will be full width of the B1 compartment and full depth of the tailboard. | 252 |
| 3096-0024 | Rescue Rear Body Staircase with Compartments. Compartments will be approx 30" deeper than normal due to water tank. | 1666 |
| 3096-0025 | Rescue body upper compartment B1 with rollup door and lower rear panel compartment B2 between full length chassis frame rails with drop-down door. | 2927 |
| 3096-0026 | Rescue rear body with staircase compartments. | 4632 |
| 3096-0027 | 12" tailboard bolt-on with bracing and Bustin Tread inserts SS rescue body. | 1152 |
| 3096-0028 | 12" tail board bolt-on with Bustin Tread and swing-down assist step for use with staircase SS rescue body. | 1220 |

| Item No. | Description | |
|---|---|---|
| 3096-0033 | Rear step assembly shall be between the rear side compartments to provide entry into the rear of the body and all horizontal step surfaces shall use Bustin or equal non-slip construction. Lower compartment between the full length chassis frame rails with an ADT aluminum bottom hinged drop-down door and stainless steel bent D-ring locking latch. | 5484 |
| 3096-0036 | Rescue Rear Body 18' Staircase (5) Compartments (4) above frame (1) between frame. | 5761 |
| 3096-0037 | Rescue rear body B1 upper compartment and B2 lower tool compartment with smooth plate drop down door. | 1876 |
| 3096-0038 | Rescue rear body full height compartment with 3 compartments above the full height compartment with thumb latches. | 3208 |
| 3096-0040 | Rescue Rear Body Full Height Compartment 36" wide X 34" deep inside. | 1698 |
| 3096-0042 | Rescue body upper 90" deep compartment B1 with rollup door and standard lower rear panel compartment B2 between full length chassis frame rails with drop-down door. | 2927 |
| 3096-0046 | Rescue Rear Body Full Height Compartment B1. Lower area 32 inches deep from access door to maximize utility. | 2096 |
| 3096-0049 | Rescue Rear Body Full Height Compartment B1. Lower B1 modified to be approx 44 inches deep IPO standard depth of 26 inches deep. | 2266 |
| 3096-0050 | Rescue Rear Body Staircase Compartments. B1 67 in deep B2 77 in deep B3 87 in deep. | 2737 |
| 3096-0051 | Rescue Rear Body Full Height Compartment B1. Includes modified upper section depth to extend forward to be even with forward bulkhead of L3/R3. Modification to accommodate ASME bottle storage. Option eliminates transverse utility in L3/R3. | 3402 |
| 3096-0052 | Rescue Rear Body with single compartment above the frame rails and two compartments above it. The single compartment will run below the two upper compartments. The two upper compartments are not equal in size. | 1697 |
| 3096-0053 | Rescue Rear Body Full Height Compartment B1 with modified maximum vertical opening and upper area depth to approx 120 inches deep. Note this will reduce transverse body compartment area in L4/R4 making it a non-transverse compartment. | 3138 |
| 3096-0054 | Rescue Rear Body Staircase Compartments. Includes modified B1 87 in deep B2 97 in deep B3 107 in deep. Option eliminates the transverse storage utility of compartment L3/R3. | 3402 |
| 3096-0055 | Rescue Rear Body Full Height Compartment B1. Includes: Modified width from 36 inches to 39 inches and upper area depth to be 90 inches deep. Modification to accommodate Ferno model 71 Basket Stretcher storage with RIT equipment inside floor mounted SlidMaster tray. Option reduces transverse utility in L3/R3. | 2833 |
| 3096-0056 | Staircase Rescue Rear Body Staircase Compartments. B1: shall accommodate storage of 2 DOT bottle cascade B2: step only B3: shall accommodate a 14' roof ladder 24' extension and 10' attic ladder with shoes and (2) 10' pike pole tubes for storage B4: standard configuration. | 4156 |
| 3096-0057 | Rescue rear body full height compartment with 3 compartments above the full height compartment. Modified height to be 2 inches shorter than standard. Lower B1 modified to be approx 44 inches deep IPO standard depth of 26 inches deep. | 3835 |
| 3096-0058 | 8" Tailboard Bolt-On With Bracing Rescue Style. | 586 |
| 3096-0059 | Rescue rear body compartment for use with lift up staircase. | 4632 |
| 3096-0060 | Rescue rear body full height B1 compartment and 1 compartment above B1. Upper B1 compartment to be 90 inches deep. | 4913 |
| 3096-0061 | Rescue Rear Body Full Height Compartment B1. Includes: B1 to be 38 in. wide modified upper section depth to extend forward to be even with forward bulkhead of L3/R3. Option eliminates transverse utility in L3/R3. | 2625 |
| 3096-0062 | Rescue Rear Body Full Height Compartment B1. B1 door opening to be 38 inches wide. Lower interior area of B1 below to be 36 inches deep. | 2079 |
| 3096-0063 | Staircase Rescue Rear Body Staircase Compartments. B1: 96 inches deep B2: 106 inches deep B3: 116 inches deep B4: standard configuration. | 4156 |
| 3096-0064 | Rescue Rear Body Walk-In with recessed door provision. Location: B1 | 5769 |
| 3096-0065 | Rescue rear body full height compartment with 2 compartments above the full height compartment. B2 on driver side to be 30.50 inches wide B3 to be 24 inches wide. | 3208 |
| 3096-0066 | Rescue Rear Body Staircase Compartments. Steeping surface to be 12 inches deep in place of standard 10 inch. | 2738 |
| 3098-0002 | 18' Walkin Rescue Body 3/4/5/4 EA | 63518 |
| 3098-0006 | 20' Walkin Rescue Body 4/4/5/5 EA | 69018 |
| 3098-0010 | 22' Walkin Rescue Body 5/5/5/5 EA | 78015 |
| 3098-0014 | 24' Walkin Rescue Body 4/4/5/4/5 EA | 86713 |
| 3098-0018 | Explosive Ordnance Disposal Walk-in Rescue 21' body | 81398 |
| 3098-0019 | Combo Extruded Aluminum Walk-in Module. 6' Long Walk-in Module. | 36356 |
| 3098-0021 | Combo Extruded Aluminum Walk-in Module. 8' Long Walk-in Module. | 37329 |
| 3098-0022 | Smooth plate entry door. Smooth plate entry door with sliding window will take the place of the [#LOC] compartment opening. Includes overhead exit head bump pad and step well light. | 1750 |

| Item No. | Description | |
|---|---|---|
| 3098-0031 | A walk thru from body module to body module. Includes roof top seal cap and weather striping. | 1123 |
| 3098-0039 | Counter top for walk-in rescue will be straight. Construction shall be aluminum with diamond plate counter top surface. | 10749 |
| 3098-0040 | Counter top for walk-in rescue will be U-Shape. Construction: 1/8 inch thick Aluminum diamond plate located 48" above walkway floor. | 10703 |
| 3098-0041 | 16' Walkin Rescue Body 5/5/5 EA | 53151 |
| 3098-0042 | 21' Walkin Rescue Body 4/5/5/5 EA | 74821 |
| 3098-0043 | Window slider 18" Tall x 40" Wide: located [#LOC]. | 617 |
| 3098-0045 | Combo Extruded Aluminum Walk-in Module. 7' Long Walk-in Module. | 36842 |
| 3098-0047 | Cut out in front body wall to enable walking into the cab from the body. | 674 |
| 3098-0048 | 14' Walkin Light Rescue Body Low Profile Wheel Well. DEA style body. Three compartments on the driver side and 4 compartments on the officer side. | 42471 |
| 3098-0049 | Combo Extruded Aluminum Walk-in Module. 10' Long Walk-in Module w/ slide out room. | 38305 |
| 3098-0054 | Combo Extruded Aluminum Walk-in Module. 9' Long Walk-in Module. Hillsborough only. The officer side will have one compartment below the floor full length of the module. The drivers side will have 2 compartments one will be standard height x 3' wide x 26" deep and one will be standard height x 5' wide x 26" deep. | 48613 |
| 3098-0056 | 16' Walkin Rescue Body 6/5/4 EA. L1 will be 49" high 26" deep belowframe height and 12" deep above frame height. R1 will be 34" wide x 94" high x 26" deep. | 54370 |
| 3098-0057 | Door entry smooth plate. Smooth plate entry door with non sliding window will take the place of the [#LOC] compartment opening. Step well will include step light. | 1750 |
| 3098-0058 | A 19" Tall x 48" Wide fixed window will be located above [#LOC]. | 864 |
| 3098-0059 | A 24" Tall x 48" Wide fixed window will be located above L1. | 904 |
| 3098-0060 | Counter top for walk-in rescue will be U-Shape around the rear. Counter tops shall be sanded smooth plate with a Zolatone grey finish. Counter top's both sides shall be rear of the entry door. | 10749 |
| 3098-0061 | 25' two-piece combo body. This body is made up of two modules. There will be a total of 6 doors on the driver side and 7 doors on the officer side. The front module is a non-walk in transverse storage module with a 36"W compartment (L1/R1). Above the transverse compartment is an open pan area. The rear module will include a 12' walk-in area forward and transverse storage rearward. The walk-in area will have a command area with a Lonseal floor forward and a robot staging area with a diamond plate floor rearward. Rear module compartmentation: L2 and L3 will be located below the floor level and be 41"W L4 is to be 48"W and 20"D R2 is the entry door R3 is to be 48"W and 26"D below floor level and 15"D above floor level R4 is to be below floor level and be 48"W R5 is above R4 and is the robot deployment door the compartments above (L5/R6 - 60"W) and behind (L6/R7 - 48"W) the rear axle are to be transverse. | 90052 |
| 3098-0063 | 17' Walk-In Rescue Body Interior. The forward 190" of the rescue body shall be designed as a walk-in area with a 46" wide walkway. The interior walkway floor is 3/16" embossed aluminum treadplate with composite underlay. The upper side walls and horizontal work surface areas shall be 14 GA brushed stainless steel ceiling shall be white gelcoat panels. Ceiling and wall insulation. | 17819 |
| 3098-0064 | 19' Walk-In Rescue Body Interior. The forward 214" of the rescue body shall be designed as a walk-in area with a 46" wide walkway. The interior walkway floor is 3/16" embossed aluminum treadplate with composite underlay. The upper side walls and horizontal work surface areas shall be 14 GA brushed stainless steel ceiling shall be 1/8" white reinforced glass fiber panels. Ceiling and wall insulation. | 19209 |
| 3098-0065 | 21' Walk-In Rescue Body Interior. The forward 238" of the rescue body shall be designed as a walk-in area with a 46" wide walkway. The interior walkway floor is 3/16" embossed aluminum treadplate with composite underlay. The upper side walls and horizontal work surface areas shall be 14 GA brushed stainless steel ceiling shall be 1/8" white reinforced glass fiber panels. Ceiling and wall insulation. | 20005 |
| 3098-0066 | 24' Walk-In Rescue Body Interior. The forward 274" of the rescue body shall be designed as a walk-in area with a 46" wide walkway. The interior walkway floor is 3/16" embossed aluminum treadplate with composite underlay. The upper side walls and horizontal work surface areas shall be 14 gauge brushed stainless steel ceiling shall be 1/8" white reinforced glass fiber panels. Ceiling and wall insulation. | 21100 |
| 3098-0067 | 20' Walkin Rescue Body South Plattsburg (3) entry doors | 69616 |
| 3098-0068 | Counter tops for walk-in rescue will be straight smooth aluminum. location over compartments. | 4556 |
| 3098-0069 | Smooth plate entry door. Smooth plate entry door to include paddle latch with sliding window will take the place of the [#LOC] compartment opening. Step well will include step light. | 1750 |

| Item No. | Description | |
|---|---|---|
| 3098-0070 | Double stainless steel vertically hinged painted smooth plate walk-in entry doors with paddle latches and non-sliding windows. Installed at the rear panel opening. | 1931 |
| 3098-0071 | Counter top for stainless steel walk-in rescue will be straight. | 2098 |
| 3098-0072 | Counter top for stainless steel walk-in rescue will be U-Shape. Transverse 36" wide lower compartments L1/R1. | 2506 |
| 3098-0073 | Combo Extruded Aluminum Walk-in Module. 6' Long Walk-in Module. | 36356 |
| 3098-0074 | Smooth plate entry door. Smooth plate entry door to incliude paddle latch with sliding window will take the place of the [#LOC] compartment opening. Step well will include step light. | 1750 |
| 3098-0076 | 20' Walkin Rescue Body 5/4/5/4 EA | 69018 |
| 3098-0077 | 20' Walk-In Rescue Body Interior. The forward 224" of the rescue body shall be designed as a walk-in area with a 46" wide walkway. The interior walkway floor is 3/16" embossed aluminum treadplate with composite underlay. The upper side walls and horizontal work surface areas shall be 14 GA brushed stainless steel ceiling shall be 1/8" white reinforced glass fiber panels. Ceiling and wall insulation. | 19608 |
| 3098-0078 | Counter top for stainless steel walk-in rescue will be U-Shape. Hidden transverse area 36" wide lower compartments L1/R1 used to store Amkus hydraulic system. Includes removable back wall in R1 and hinged access door inside the walk-in rescue body. Includes hydraulic / electric raceway running from roof area to transverse compartment. | 2806 |
| 3098-0079 | 18' Walkin Rescue Body Central Elgin. (2) entry doors. | 64567 |
| 3098-0080 | Window Fixed. A window with approx glass size of 12" T x 24" W shall be provided in the body. Located: [#LOC]. | 904 |
| 3098-0081 | 19' Walkin Rescue Body 4/4/5/4 EA | 65965 |
| 3098-0082 | Counter top for walk-in rescue will be straight. Construction shall be aluminum with a smooth sanded finish counter top surface. | 10749 |
| 3098-0083 | Smooth plate entry door. Entry door with sliding window shall take the place of the R1 compartment. Includes: overhead exit head bump pad and step well light. Door to be hinged to the left of the opening viewed from outside the body. Door to open as wide as posible. Finish: is painted. | 1920 |
| 3098-0084 | Combo extruded aluminum walk-in module. 6' long walk-in module. The front module is a walk in "REHAB" module with a 69" long compartment with an entry door on the officer side of the module that has the hinge to the left of the door opening. The module has (4) compartment doors (L1/R1L2/R2). L1 is located below the floor line L2 is access above the floor line to the area below the rear wall bench R1 is body entry door R2 is access to below the floor line. | 38160 |
| 3098-0087 | 19' Walk-In Rescue Body Interior. The entire center of the rescue body shall be designed as a walk-in area with a 46" wide walkway. This area shall be accessible from both the cab and the rear entrance doors. The interior walkway floor is 3/16" embossed aluminum treadplate with composite underlay. The upper side walls and horizontal work surface areas shall be 14 GA brushed stainless steel ceiling shall be 1/8" white reinforced glass fiber panels. Ceiling and wall insulation. | 19777 |
| 3098-0088 | Window slider 12" Tall x 24" Wide: located [#LOC]. | 1000 |
| 3098-0089 | Counter top work station. A straight (1) man counter top work station shall be provided 30 inches off module floor. Includes raceway with removable back splash cover for mounting receptacles and wire routing. Construction shall be smooth aluminum. Finish shall be sanded smooth aluminum. Locate: inside walk-in module facing forward on forward bulkhead wall to driver side corner. | 2348 |
| 3098-0090 | 22' Walkin Rescue Body. The interior shall be an open design with rear body conference room and officer side body entry. Body will have three (3) compartments on each side & one (1) service access door on the driver side over the rear axle area. | 78015 |
| 3098-0091 | Combo extruded aluminum walk-in module. 6' long walk-in module. The front module is a walk-in module with a 72" long compartment an entry door on the officer side hinge to the right of the door opening. The module has (2) compartment doors (L1 & R1) . L1 is located below the floor line on the left side of the module and R1 is the module entry door located on the right side of the module. Body width to be 93.5 inches. | 38160 |
| 3098-0092 | Window Fixed. 18" Tall x 40" Wide fixed window. Locate: Above L1. | 864 |
| 3098-0093 | Door entry smooth plate. Smooth plate entry door 30 in wide x 80 in tall with non sliding window to be provided. Step well will include step light. Locate: R1 | 1750 |
| 3098-0094 | Window provision for QTY of two (2) windows to accommodate window size 41 inches wide x 23 inches tall shall be located side by side over the work station on the driver side of the body. Windows not included. | 292 |
| 3098-0095 | 22' Walkin Rescue Body 3/4/4.4/4.4/4 EA. Body design is to be a single box on a tandem rear axle. | 78041 |
| 3098-0097 | 20' Walkin Rescue Body Worcester (2.5/3.7/3.5/5/3.3). | 73331 |
| 3100-0317 | Horizontal partition located in driver side roof top compartment over DOT bottles. Floor to be provided above the DOT bottles to use remaining area above. | 1013 |

| Item No. | Description | |
|---|---|---|
| 3100-0512 | Vertical partition located in driver side roof top compartment at rear access door. Partition is to be full height of compartment and 61" long capped of at the end to create a boxed in area for separate storage. | 512 |
| 3100-0513 | Driver half side tandem body with (1) 44" wide first forward (1) 30" wide second forward and (1) 66" wide rearward compartments. Compartment height openings to be 30" IPO standard 34". | 12904 |
| 3105-0079 | Backboard storage sleeve with retaining strap. Located in LT/RT compartment forward of the speedlays to be 5" high x 20" wide. | 1041 |
| 3110-0027 | Rear of body to have un-painted extrusions with un-painted smooth plate body panels or just unpainted smooth plate to facilitate rear body striping. | 283 |
| 3110-0028 | Rear body panels to be painted smooth plate. | 992 |
| 3110-0079 | Rear of body to have painted extrusions with un-painted smooth plate body panels to facilitate rear body panel striping. | 283 |
| 3110-0137 | Rear body panels to be painted smooth FRP. | 306 |
| 3110-0169 | Right Rear Panel Compartment at the rear face of the body on the right side. The compartment shall be 58" high x 27" wide x 10" deep equipped with a single stainless steel lap style door with D-ring locking latch. The floor will be lined with 1/2" U.H.M.W plastic. | 2991 |
| 3110-0224 | Rear body panels to be upgraded from smooth aluminum plate to un-painted smooth FRP. | 306 |
| 3110-0344 | Rear body panels to be upgraded from smooth aluminum plate to painted smooth FRP. | 306 |
| 3110-0347 | Rear body panels to be unpainted smooth FRP. For use with full width rear chevron applications. | 194 |
| 3120-0486 | Vertical and horizontal partitions located in officer side roof top compartment. Vertical partition located rearward of electric cord reel and horizontal partition located over DOT bottles. Floor to be provided above the DOT bottles to use remaining area above. | 1385 |
| 3120-0692 | Vertical partitions located in officer side roof top compartment. Vertical partition located 3" forward of electric cord reel and a adjustable divider shall be installed forward of the partition. The divider shall span from front to rear and be adjustable left to right. The use of Unistrut or equal materials shall provide for adjustability as required for divider. The divider plate shall be 3/16" smooth aluminum. | 772 |
| 3130-0709 | Pump panels to be recess mounted in the pump module by approximately 2" each side of body. | 565 |
| 3134-0150 | Pump operator control panel in driver side forward body compartment L1 to be stainless steel.480 | 546 |
| 3136-0011 | P-Rubber in flex joint(s) between pump module and/or body modules. | 671 |
| 3136-0013 | Additional Booster Reel Roller Assembly. Locate opposite side of booster reel. | 272 |
| 3136-0031 | Removable Speedlay Tray(s). The floor of the tray(s) to be slotted to prevent the accumulation of water and allow for ventilation of wet hose. | 674 |
| 3136-0117 | P-Rubber in flex joint(s) between pump module and/or body modules. Horizontal across tops and along sides at flex joint(s). | 671 |
| 3136-0122 | Commercial chassis requires 3" additional to cab and body gap due to exhaust requirements. | 378 |
| 3136-0136 | Removable speedlay tray(s). The floor of the tray(s) shall be sloped from a raised position in the middle slanted downward towards each end. Additionally the floors shall be slotted to prevent the accumulation of water and allow for ventilation of wet hose. There shall be slotted hand holds on each side of the tray (IPO grab handles on each end). | 824 |
| 3136-0166 | Removable Speedlay Tray(s). The floor of the tray(s) to be slotted to prevent the accumulation of water and allow for ventilation of wet hose. The front and rear walls of tray(s) to be the same height. There shall be vertical slots on each side of the tray ( in place of extruded grab handle) to facilitate lifting. This tray shall only be used with taller speedlay opening so the preconnect swivel shall be at the top (as opposed to rear wall) and walls of the tray can be same height. | 674 |
| 3136-0199 | Speedlay tray - removable. Tray includes a 1.25 inch extruded alum handle low on each end of tray and slots down each side to facilitate lifting. The floor of the tray shall have poly slides and be slotted to prevent the accumulation of water and allow for ventilation of wet hose. Tray designed to accommodate 200 feet of double stacked 1.75 inch hose. | 674 |
| 3136-0205 | Removable Aluminum Speedlay Tray(s) with slotted floor to prevent the accumulation of water and allow for ventilation of wet hose. Includes vertical slotted hand hold cutouts on each end to facilitate easy removal of the hose tray. No lip No grab rod. | 674 |
| 3136-0244 | The walls of top mount walk way tool storage compartments to have (2) additional louver patterns in rear wall of each compartment for a total of (3) each side IPO standard for additional ventilation. | 207 |
| 3200-0002 | Fold Down Jump Seat - Install a double fold down jump seat. Vinyl shall be [#COL] in color. The seat will be located on the [#LOC] in the body interior. Seat will be a non-riding position unless a seat belt option is chosen. | 586 |
| 3200-0003 | Floor Mounted Tie Down (Each) - Provide equally spaced tie downs in the interior. Whom ever does the interior will install these. E-One will furnish the Tie downs. | 8 |

| Item No. | Description | |
|---|---|---|
| 3200-0008 | Bench seat against [#LOC] wall. Seat will allow for approx 38" of room for two people side to side. Whom ever does the interior will install the bench. E-One will furnish the bench base.Seat will be anon-riding position unles seatbealt option is choosen. | 753 |
| 3200-0009 | Bracket for bomb shield. Install bracket on interior officer side wall in the robot area for a customer supplied bomb shield. | 111 |
| 3200-0010 | A full height cabinet with plexiglass doors will be installed in the body interior above counter top. Cabinet will be located above [#LOC] in the interior and will be approx 36" wide. | 651 |
| 3200-0011 | A full height cabinet with plexiglass doors will be installed in the body interior above counter top. Cabinet will be located above [#LOC] in the interior and will be approx 48" wide. | 710 |
| 3200-0012 | A full height cabinet with plexiglass doors will be installed in the body interior above counter top. Cabinet will be located above [#LOC] in the interior and will be approx 60" wide. | 767 |
| 3200-0013 | Bench seat against [#LOC] wall. Each seat will allow enough room for each person side to side. Vinyl shall be [#COL] in color. Seat width will vary due to qty of seats. Seat will be a non-riding position unles seatbealt option is choosen. | 606 |
| 3200-0014 | Fold Down Jump Seat - Install a single fold down jump seat. Vinyl shall be [#COL] in color. The seat will be located on the [#LOC] in the body interior. Seat will be a non-riding position unless seat belt option is chosen. | 325 |
| 3200-0015 | Bostrom "Store All" SCBA storage seat back will be located behind each seat on [#LOC] of the interior and will be made of [#COL] vinyl. | 452 |
| 3200-0016 | E-ONE SCBA storage seat back will be located behind each seat on [#LOC] of the interior and will be made of [#COL] vinyl. | 437 |
| 3200-0017 | Seat belts will be located on each seat on [#LOC] of the interior. | 130 |
| 3200-0018 | Cushion seat back E-ONE. A seat back cushion shall be located behind each seat on [#LOC] of the interior and will be made of [#COL] vinyl. | 106 |
| 3200-0020 | Stanley Vidmar 6 drawer tool box Model # SCU1004AL. The cabinet will be recessed into the officer side cabinet. The cabinet will have a single lock for all 6 drawers. The cabinet will be colored black. If there is a Van Mor interior drop ship the cabinet to Van Mor to be installed. | 1411 |
| 3200-0021 | Heater rear w/cover. Locate in the body interior. Exact location will be up to designer. | 1835 |
| 3200-0023 | Seat belts will be located on each seat on [#LOC] of the interior. Seat belt will be installed by the vendor chosen to install the interior. | 81 |
| 3200-0024 | Pedestal Seat & Swivel. E-One supplied/Van-Mor installed. Locate evenly spaced in front of the desk on the driver side. Seat will be anon-riding position unles seatbealt option is choosen. | 582 |
| 3200-0025 | 6 foot slide out room. Locate on [#LOC] in front module. | 19153 |
| 3200-0026 | 8 foot slide out room. Locate on [#LOC] in front module. | 19425 |
| 3200-0027 | E-One supplied/Van-Mor installed Swivel Pedestal Seat. Locate in cab command area in front of desk. If more then one seat offset them. | 582 |
| 3200-0029 | Officer side command desk in the body. Desk will run from front wall of the body interior to the rear wall of the interior. There will be a backsplash raceway on the back side of the desk with a removable panel. Desk will have a 2" lip down with a 1" lip back. All items are to have a DA finish. | 3195 |
| 3200-0030 | Provide (2) two overhead storage compartment with plexi glass doors above the desk top on the officer's side installed on the upper portion of the interior. Locate in the body interior. Cabinet shall be made out of aluminum with plexi glass sliding doors. Each cabinet shall have a DA finish. The doors should slide side to side allowing access to one side at a time. Each cabinet shall be approx 14" deep x 14" high x front to rear in the interior over the desk. | 2494 |
| 3200-0031 | Body interior walls above the counter top and all other walls above desk height shall be Kemply. The counter top below the counter (the wall behind L1 & L2 on the interior) and all walls lower then desk height shall be 3/16 inch DA finished smooth plate. | 1831 |
| 3200-0033 | Rack ready cabinet with the ability to add Audio Video components. This will be located over L2 rearward of the refrigerator in the interior of the WI module. Rack will sit on a roll-out tray to facilitate easy access to rear of the rack. | 4787 |
| 3200-0035 | An interior cabinet approx 56W x 29H x 25D. Locate the cabinet over L1 in the interior of the WI module. There will be a verticle divider centered in compartment. Two adj shelves will be installed each side of the divider. Cargo netting will be attached to the opening with both snaps and twist locks. Cabinet divider and shelves will all be DA finished. | 2997 |
| 3200-0039 | There will be a desk at the front of the walkway on the driver's side. The desk will run from the front to just behind L2 in the body interior. The desk will be approx 28 inch deep with a 2 inch lip down at the front. Desk will be made from 1/4 inch sanded smooth plate aluminum and painted Zolatone Gray. | 894 |
| 3200-0040 | Install a Swivel Pedestal Seat. Locate at desk area in front of body. Not to be used during transit. | 943 |

| Item No. | Description | |
|---|---|---|
| 3200-0041 | Provide overhead storage cabinet with plexi glass doors above the desk top. Locate in the body interior on the driver's side above the desk. Cabinet shall be made out of aluminum with plexi glass sliding doors. Each cabinet shall have a DA finish. The doors should slide side to side allowing access to one side at a time. Each cabinet shall be approx 14" deep x 14" high x 38" long. | 730 |
| 3200-0042 | There will be an access door on the back wall of R1. Access door shall be a ROM door and shall be accessable from the interior. | 1690 |
| 3200-0043 | Body interior shall have Lonseal flooring IPO diamond plate. Flooring shall consist of black Lonseal with a plywood subfloor on top of aluminum smooth plate. Van Mor installed. | 2795 |
| 3200-0044 | There will be an access panel with quarter turn latches located in the counter top ahead of the frige for access to the cascade bottles in B1. | 124 |
| 3200-0045 | A full height cabinet with plexiglass doors will be installed in the body interior above counter top. Cabinet will be located above [#LOC] in the interior and will be approx 53" wide. | 710 |
| 3200-0046 | A full height cabinet with plexiglass doors will be installed in the body interior above counter top. Cabinet will be located above [#LOC] in the interior and will be approx 64" wide. | 767 |
| 3200-0047 | Floor Mounted Tie Down (Each) - Provide equally spaced tie downs in the area the robot will be stored. | 89 |
| 3200-0048 | E-One supplied VanMor desk with an angled raceway will be installed on the drivers side. Desk will run from front of walk-in to just infront of the L4 compartment. Desk will be approx 23" deep with a 2" lip bent down at the front. The desk will be approx 30" off the floor. Desk will have three 1.5" holes one on each end and one centered just forward of raceway for wires to run through. Raceway will be angled with removable plates on the angle to mount recepts. Desk and raceway will need to be swirled and clear coated. | 1739 |
| 3200-0049 | Refrigerator Electric 12/120 Volt. Norcold model DE-0751 refrigerator and freezer shall be installed in the open deck B area inside the body in an aluminum enclosure with positive locking straps. | 1556 |
| 3200-0052 | Provide (4) four upper storage cabinets on the countertop inside the rescue body on the officer side. Cabinets shall be made out of aluminum with plexiglass sliding doors. The aluminum cabinets shall have a DA finish. The plexiglass doors shall slide side to side allowing access to one side at a time. | 5067 |
| 3200-0053 | Provide (3) three upper storage cabinets on the countertop inside the rescue body on the driver side. Cabinets shall be made out of aluminum with plexiglass sliding doors. The aluminum cabinets shall have a DA finish. The plexiglass doors shall slide side to side allowing access to one side at a time. | 4358 |
| 3200-0054 | Heater rear walk-in area. Locate under bench seat in the body interior. | 1835 |
| 3200-0055 | There will be pass thru access for [#LOC]. Open access shall be from the interior into the [#LOC] compartment. | 806 |
| 3200-0056 | Step entry area hinged safety floor. L3/R3 | 1731 |
| 3200-0057 | Floor box over wheel well driver side of body | 605 |
| 3200-0058 | Bench seat against officer side body wall over wheelwell. Seat will allow enough room for (2) persons side to side. Seat bottom and back cushion to be Dura-Wear black in color. Seat length will be approx 68" front to rear of body. Seat will be a non-riding position unles seatbealt option is choosen. | 2555 |
| 3200-0059 | Bulkhead approx 3" thick forward side of compartment L4 & R5 A floor to ceiling bulkhead is to be provided forward of the rear compartments on each side of the body. Bulkheads to be sized to leave a 35" walkway in center of body. | 1425 |
| 3200-0060 | Locate rear cab heaters below rear bench seat. (1) Heater mounted as far forward and (1) mounted as far rearward. Includes louvers as required for each heater as mounted under the bench seat. | 421 |
| 3200-0061 | Provide two (2) upper storage cabinets on the inside the 17' rescue body on the driver side. Cabinets shall be made of 14 gauge stainless steel. The cabinets shall have a DA finish. | 1418 |
| 3200-0062 | Provide two (2) upper storage cabinets on the inside the 17' rescue body on the officer side. Cabinets shall be made of 14 gauge stainless steel. The cabinets shall have a DA finish. | 1418 |
| 3200-0063 | Provide two (2) upper storage cabinets on the inside the 19' rescue body on the driver side. Cabinets shall be made of 14 gauge stainless steel. The cabinets shall have a DA finish. | 1550 |
| 3200-0064 | Provide two (2) upper storage cabinets on the inside the 19' rescue body on the officer side. Cabinets shall be made of 14 gauge stainless steel. The cabinets shall have a DA finish. | 1550 |
| 3200-0065 | Provide three (3) upper storage cabinets on the inside the 21' rescue body on the driver side. Cabinets shall be made of 14 gauge stainless steel. The cabinets shall have a DA finish. | 1738 |
| 3200-0066 | Provide three (3) upper storage cabinets on the inside the 21' rescue body on the officer side. Cabinets shall be made of 14 gauge stainless steel. The cabinets shall have a DA finish. | 1738 |
| 3200-0067 | Provide three (3) upper storage cabinets on the inside the 24' rescue body on the driver side. Cabinets shall be made of 14 gauge stainless steel. The cabinets shall have a DA finish. | 1926 |

| Item No. | Description | |
|---|---|---|
| 3200-0068 | Provide three (3) upper storage cabinets on the inside the 24' rescue body on the officer side. Cabinets shall be made of 14 gauge stainless steel. The cabinets shall have a DA finish. | 1926 |
| 3200-0069 | Provide (2) Two equally sized overhead storage compartments with plexiglass sliding doors above the body exterior compartments. Cabinet size shall be approx 24" deep x 33" tall x 50" long front to rear. Located on the driver side of the body and approx over L2 and L3. Cabinets shall be made out of aluminum. The plexiglass doors should slide side to side allowing access to one side at a time. Finish: Shall be sanded aluminum unless otherwise specified. | 3600 |
| 3200-0070 | Provide (3) Three equally sized overhead storage compartments with plexiglass sliding doors above the body exterior compartments. Cabinet size shall be approx 24" deep x 33" tall x 55" long front to rear. Located on the officer side of the body and approx over R2 R3 and R4. Cabinets shall be made out of aluminum. The plexiglass doors should slide side to side allowing access to one side at a time. Finish: Shall be sanded aluminum unless otherwise specified. | 4800 |
| 3200-0071 | There will be a fold up desk top located at the front of the body interior walkway. The desk top will span the width of the walkway and be approximately 17" deep when in the functional position. The desk will be approx 17 inches deep with a 2 inch lip down at the front. Desk will be made from 1/4 inch aluminum and have a sanded finish. | 962 |
| 3200-0072 | There shall be a cabinet with approx interior dimension of 65" wide x 26" deep x 12" tall. Includes (1) center vertical divider (2) lift up style hinged aluminum framed Plex doors with a securing latch at center of the doors. The cabinet;'(s) shall maximize the available area above interior body compartment L1 or R1. Finish: Shall be sanded aluminum unless otherwise specified. | 1900 |
| 3200-0073 | Provide three (3) upper storage cabinets on the inside the 20' rescue body on the driver side. Cabinets shall be made of 14 gauge stainless steel. The cabinets shall have a DA finish. | 1695 |
| 3200-0074 | Provide two (2) upper storage cabinets on the inside the 20' rescue body on the officers side. Cabinets shall be made of 14 gauge stainless steel. The cabinets shall have a DA finish. | 1644 |
| 3200-0076 | Pac Trac panels vertically stacked on back wall of interior rescue body rearward of rear seat 50" wide. Includes (4) Ironslok brackets. Does not include halligans or Axes. | 2660 |
| 3200-0079 | Cabinet radio provide (1) One cabinet with approx dimensions to be 39 inches wide x 26 deep and it shall span from counter top to ceiling. Cabinet shall include plexiglass sliding doors and (2) adjustable shelves. Cabinet shall be made out of aluminum. Cabinet finish is sanded aluminum unless otherwise specified. The plexiglass doors should slide side to side allowing access to one side at a time. Locate: on counter top over R3. | 1551 |
| 3200-0080 | Bench seat Four (4) man rear facing in body with Bostrom Universal SCBA seat backs. Includes provision for rear heaters mounted below bench at outboard position (if equipped). Ventilation shall be provided and a expanded metal guard shall be included around the heater units inside the riser. Design to include a drop down hinged door with D-latch as large as possible to access area inside bench seat riser between heaters. Color to be Black vinyl. Locate: Centered on rear body forward bulkhead facing aft. | 4230 |
| 3200-0081 | Cabinet refrigerator: Approx size to be 22 inches wide x 36 inches tall x 26 inches deep. Cabinet finish is sanded aluminum unless otherwise specified. Make and model TBD at prebuild. Located: inside walkin body on driver side 16 inches from forward edge of counter top over L3. | 1604 |
| 3200-0082 | Cabinet medical: Approx size to be 32 wide x 36 tall x 26 deep with front sliding Plexiglass door. Includes (1) adjustable shelf. Cabinet finish is sanded aluminum unless otherwise specified. Located inside walkin body on driver side over L4. | 3350 |
| 3200-0083 | Lift up desk top. There shall be a lift up desk top inside the body. The desk shall be designed to accommodate the rear facing bench seat position at the body forward wall on the drivers side outboard location. The desk top size to be approx 22" wide x 20" deep. Finish shall be sanded aluminum. Locate: On forward face of counter over L1 | 1078 |
| 3200-0084 | Heater rear body w/o cover (PR). 23000 BTU ea. Locate: inside bench seat riser. | 1718 |
| 3200-0085 | Dry erase board by Van-Mor. The rear walkin body interior side wall shall be overlayed with A dry erase (Melamine) type material. Color: White. Location: Driver side above counter top to ceiling and full length of body. Approx finished size to be approx 23.5 inches tall x 218 inches long. | 2769 |
| 3200-0086 | Cabinet with tinted front sliding Plexiglass doors. Approx size 26T x 24D x 56L. The plexiglass doors shall slide side to side allowing access to one side at a time. Iinside the cabinet shall include a centered vertical divider and (2) Two adjustable shelves with (1) One located on each side of the divider. The cabinet finish shall be sanded aluminum unless otherwise specified. Location: Inside walkin body on top of counter on the officer side of body. | 2153 |
| 3200-0087 | Cabinet refrigerator aluminum construction. with a vertically hinged locking access door to storage above to accommodate refrigerator per dealer quote. Finish to be Zolatone Gray. Locate: Front driver side wall corner of rehab combo module. | 1066 |

| Item No. | Description | |
|---|---|---|
| 3200-0088 | Zolatone Gray finish. REHAB module walk-in interior to have Zolatone Gray finish. Includes: All side walls to 40" above floor over head EMS storage cabinet interior and exterior rear wall bench seat riser fold down jump seat mounting bracket corner cabinet & refrigerator cabinet driver side. | 1993 |
| 3200-0089 | Cabinet corner radio. Smooth aluminum construction. The cabinet shape and size shall be approximately 12 tall x 20 wide x 19 deep and have the face panel angled from the driver side wall approximately 45 degrees. Finish: to be Zolatone Gray. Locate: On top of refrigerator cabinet located in front driver side wall corner of rehab combo module. Comm radio speaker location TBD. | 566 |
| 3200-0090 | Bench seat full length combo REHAB. Seat cushion will be a split design to provide for improved access and storage of large items. Vinyl color shall be Black. Seat configuration will not be a riding position. Finish: Riser including interior bottle access door to be Zolatone Gray and riser interior area of bench including floor shall be sanded aluminum. Locate: Rear wall facing forward. | 5349 |
| 3200-0092 | Refrigerator Electric NR751 AC/DC 12/120 Volt. Dual voltage refrigerator for marine and truck applications wired to battery system and generator (if so equipped). Norcold NR751 Marine 2.7cuft. Color: Black. Refrigerator to be located in [#LOC]. | 1344 |
| 3200-0094 | Cabinet: Unique to SO138742 Central Elgin. Approx size to be 22 inches wide x 16 inches tall x 26 inches deep. Cabinet finish is sanded aluminum unless otherwise specified. Includes vertically hinged door with latch. Located: inside walkin body on driver side above refrigerator cabinet. | 1283 |
| 3200-0095 | Cabinet: Unique to SO138742 Central Elgin. Approx size to be 19 inches wide x 36 inches tall x 26 inches deep. Cabinet finish is sanded aluminum unless otherwise specified. Includes: (1) adjustable shelf and vertically hinged door with latch. Design does not include cabinet housing and components shall be attached to neighboring compartments. Located: inside walkin body on driver side aft of refrigerator cabinet. | 1419 |
| 3200-0096 | Cabinet: Unique to SO138742 Central Elgin. Provide (1) One cabinet with approx dimensions to be 32 inches wide x 26 deep and it shall span from counter top to ceiling. Design does not include cabinet housing and components shall be attached to neighboring compartments. Cabinet shall include plexiglass sliding doors and (1) adjustable shelf. Cabinet shall be made out of aluminum. The plexiglass doors should slide side to side allowing access to one side at a time. Cabinet finish is sanded aluminum unless otherwise specified. Located: inside walkin body on officer side side on counter top aft of radio cabinet. | 1529 |
| 3200-0097 | Seat pad for use on fold out steps. Cushion to be vinyl black in color and held in place with a Velco strap. Cushion to be stored in a body compartment. | 155 |
| 3200-0098 | Bench seat against drivers side interior wall. Seat base hinges upward for access to the area below. Vinyl shall be black in color. Seat will be a non-riding position unless seat belt option is chosen. | 977 |
| 3200-0099 | Cabinet set of three (3): Unique to SO140032 Renton. Cabinets to provide 16 inches of useable depth in adjustabe trays. Outboard cabinets approx size to be 26T x 26W center cabinet to be approx 26T x 32W. Each cabinet to Include: (2) two adjustable shelves a lift up aluminum hinged door with thumb latch and gas spring. Note: adjustable shelves to be spaced 1 inch from rear compartment wall to pass electrical plugs. Finish shall be smooth sanded aluminum. Locate: inside walkin module on rear wall in upper body. | 3166 |
| 3200-0100 | White Board / Dry Erase removable. A removable dry erase white board 36W x 26T shall be provided. The board shall fitted with removable plunger style or similar design hardware so it may be easily removable and re-located to multiple temporary locations. Locate: Inside body at a Whit Board designated mounting position. Requiers additional sales code. | 710 |
| 3200-0101 | Mounting Kit White Board / Dry Erase removable. A removable board mounting kit shall be provided and installed to accommodate the white board / dry erase board specified. The board shall be fitted with the removable male portion hardware of the kit so it may be easily removable and re-located to remote locations on the body. Locate: Body mounted female base portion of the kit Inside body module on driver side wall above corner cabinet. | 199 |
| 3200-0102 | Mounting Kit White Board / Dry Erase removable. A removable board mounting kit shall be provided and installed to accommodate the white board / dry erase board specified. The board shall be fitted with the removable male portion hardware of the kit so it may be easily removable and re-located to remote locations on the body. Locate: Body mounted female base portion of the kit outside the body module on officer side wall below module window. | 199 |

| Item No. | Description | |
|---|---|---|
| 3200-0104 | Cabinet refrigerator/ electronics / storage. Size: 22.5 inches wide x 26 inches deep from floor to ceiling. Bottom of cabinet shall accommodate a refrigerator with electric fan vent. Make and model Norcold NR751. The area above the refrigerator shall be divided into two equal compartment spaces. Both spaces shall be accessed with a vertically hinged door and secured with a thumb style lever latch. The lower space above the refrigerator shall include (1) adjustable shelf. The upper cabinet space shall be labeled (Customer Electronics Cabinet) and include louvers on the front access door for air flow and a removable side access cover large as practical to accommodate added service access. Finish: sanded aluminum. Locate: inside walk in body on forward bulkhead facing aft in officer side corner. | 2722 |
| 3200-0105 | There shall be a roll around chair provided with a hold in place device for when the truck is moving. Locate in rear body command area. | 333 |
| 3200-0107 | Caulk silicone. Apply caulk to all welded joints body seams and holes to produce a seal to accommodate positive pressure finished product with CBRN filtration system. Caulk to be applied prior to module interior installation. Caulk must be applied to any holes cuts or voids that exist or are produced in the process of assembly that expose the interior to the exterior. | 1179 |
| 3200-0108 | Fan. Grainger 6KD74 24-volt DC fan shall be provided for interior compartment. Fan shall be mounted inside a fabricated box to best accommodate air flow. The fan shall be wired to a switch that is properly labeled and located adjacent to the interior light controls for the body. Locate: Module ceiling in each corner area. | 338 |
| 3200-0109 | Bench seat (3) three man with riser. The bottom cushion shall be removable provideing access to CBRN service area inside the riser. Design shall accommodate seating configured from the driver side of module and span accross the chassis toward the entry door. Design shall not block entry into the module. Vinyl color shall be Black. Seat configuration will not be a riding position. Finish: Diamond plate and riser interior area of bench including floor shall be sanded aluminum. Locate: Inside module on forward wall facing aft. | 2681 |
| 3200-0110 | Ducting. CBRN ducting. Locate: Inside module below bench seat ducted to officer side of module. | 1136 |
| 3200-0111 | Cabinet storage 30 in tall x 60 in long x 18 in deep aluminum diamond plate construction with smooth top and sanded finish. Includes (2) vertically hinged doors with D-latch and (1) adjustable shelf behind each door. Locate inside walkin combo module on driver side floor against rear wall facing forward. | 2698 |
| 3200-0112 | CBRN Filtration system. A 24-volt DC CBRN positive pressure filtration system shall be provided. Locate: inside combo module below bench seat on forward bulkhead. | 46546 |
| 3200-0113 | Cabinet overhead. Provide (2) two aluminum overhead storage cabinets (1) one each side of forward bulkhead wall A/C unit. Approx size 35L x 15T X 15D. Includes: lift-up louvered access doors with thumb latches. Cabinets shall have a sanded aluminum finish unless otherwise specified. | 1746 |
| 3200-0114 | Raceway. A aluminum raceway approx 6 inches tall shall be provided. Raceway shall include a removable face plate(s) designed for access. The design shall accommodate duplex receptacles installed in the removable face plat(s). Raceway shall include minor notching to accommodate clearance around obstructive components where applicable. Finish to be sanded aluminum. Locate: Counter top against forward bulkhead wall and span full width of body counter top area. | 371 |
| 3200-0115 | Bench seat. A 4 man bench seat with riser shall be provided. Bottom of bench seat riser shall be accessable by a hinged door located at the aft end facing to rear body entry door. There shall be four (4) single 1 man type bottom and back cushions. Riser interior size 124 L x 20 W x 13 T. Design shall include provision for (4) four pike poles (2) 6' & (2) 8' use 10' tubes & long tool storage inside. Seat positions shall accommodate seatbelts if selected in quote. Vinyl color shall be Black. Finish: Diamond plate. Locate: Inside rear body along walkway on officer side and aft close to rear body entry door. | 5349 |
| 3200-0116 | Cabinet overhead. Provide (6) six aluminum overhead storage cabinets with open front. Approx size 47L x 32T X 24D. Locate: on counter top (3) three on officer side from rear of body forward and (3) three on driver side from rear of body forward. NOTE: With recess rear body B1entry door option aft cabinets opening shall be 21.5 inches narrow of specified value. Cabinets shall have a sanded aluminum finish unless other wise specified. | 4026 |
| 3200-0117 | Raceway. A aluminum raceway approx 6 inches tall shall be provided on top of the counter top against back wall and span full length of counter top area. Raceway shall include a removable face plate design for access. The desigh shall accommodate duplex receptacles installed in the removable face plat. Raceway shall include minor notching to accommodate clearance around obstructive components where applicable. Finish to be sanded aluminum. Locate: Body side wall of walk in body. | 541 |

| Item No. | Description | |
|---|---|---|
| 3200-0118 | Cabinet overhead. Provide (8) eight aluminum overhead storage cabinets with open front inside rear body and above counter tops (4) four each side of body. Each cabinet shall have (1) one adj. shelf. Cabinets shall be sized so as to line up with the opposing exterior body compartmet and height shall be tall as possable. Cabinets shall have a sanded aluminum finish unless other wise specified. | 8016 |
| 3200-0119 | Bench seat. A 4 man bench seat with riser shall be provided. Bottom of bench seat riser shall be accessable by a hinged door located at the aft end facing to rear body entry door. There shall be four (4) single 1 man type bottom and back cushions. Riser interior size 142L x 18 W x 13 T. Seat positions shall accommodate seatbelts if selected in quote. Design shall accommodate heaters if selected in quote. Vinyl color shall be Black. Finish: Diamond plate. Locate: Inside rear body along walkway on officer side and aft close to rear body entry door. | 4765 |
| 3300-0007 | Door single vertical hinged painted. Location(s): [#LOC] | 832 |
| 3300-0008 | Door double vertical hinged painted. Location(s): [#LOC]. | 925 |
| 3300-0009 | Door single vertical hinged diamond plate. Location(s): [#LOC] | 582 |
| 3300-0010 | Door double vertical hinged diamond plate. Location(s): [#LOC]. | 832 |
| 3300-0011 | Door single horizontal hinged lift-up box pan configuration painted. Location(s): [#LOC] | 809 |
| 3300-0017 | Door roll up short (up to 45") with satin finish ROM. Location(s): [#LOC]. | 933 |
| 3300-0019 | Door roll up tall (greater than 45") with satin finish ROM. Location(s): [#LOC]. | 1330 |
| 3300-0022 | Door roll up tall (greater than 45") with painted finish ROM. Location(s): [#LOC]. | 1978 |
| 3300-0023 | Door single stainless steel vertical hinged painted. Location(s): [#LOC] | 1041 |
| 3300-0024 | Door double stainless steel vertical hinged painted. Location(s): [#LOC] | 1063 |
| 3300-0025 | Door single horizontal hinged drop down painted. Location(s): [#LOC]. Door(s) will have chain hold open devices. | 668 |
| 3300-0027 | Door bi-fold horizontal hinged diamond plate. Location(s): [#LOC]. Includes upper door mounted guide roller assembly and the lower door will have chains for side or upper rear body mount or bumper style for lower rear body mounted. | 925 |
| 3300-0029 | Door single stainless steel horizontal hinged lift-up painted. Location(s): [#LOC] | 1066 |
| 3300-0030 | Door double 3-point vertical hinged painted. Location(s): [#LOC] | 1844 |
| 3300-0062 | Keyed compartment door latch with #1250 key. Location(s): [#LOC]. | 89 |
| 3300-0063 | Keyed roll-up compartment door with #1250 key. Location(s): [#LOC]. | 157 |
| 3300-0064 | All apparatus doors body and chassis are to be keyed alike. Not avail on Commercial Chassis. Requires keyed latch option to be included in shop order. | 345 |
| 3300-0065 | Electric lock for an ROM roll-up door (EA). The door to lock on both sides of compartment as applicable. Includes manual J236 key lock. Location(s): [#LOC] | 685 |
| 3300-0066 | Drip pan for a ROM roll-up door (EA). Location(s): [#LOC]. | 189 |
| 3300-0076 | Door double 3-point vertical hinged painted. Location(s): [#LOC] | 1344 |
| 3300-0082 | Roll-up door a tall 3' wide ROM door. Satin finish. Locate in [#LOC]. | 1199 |
| 3300-0083 | Roll-up door a tall 4' wide ROM door. Satin finish. Locate in [#LOC]. | 1479 |
| 3300-0084 | Roll-up door a tall 5' wide ROM door. Satin finish. Locate in [#LOC]. | 1512 |
| 3300-0085 | Roll-up door a tall 3' wide ROM door. Painted job color. Locate in [#LOC]. | 1509 |
| 3300-0086 | Roll-up door a tall 4' wide ROM door. Painted job color. Locate in [#LOC]. | 1804 |
| 3300-0087 | Roll-up door a tall 5' wide ROM door. Painted job color. Located in [#LOC]. | 1860 |
| 3300-0088 | Roll-up door over wheel well 4' wide ROM door. Satin finish. Locate in [#LOC]. | 1169 |
| 3300-0089 | Roll-up door over wheel well 5' wide ROM door. Satin finish. Locate in [#LOC]. | 1459 |
| 3300-0090 | Roll-up door over wheel well 4' wide ROM door. Painted job color. Locate in [#LOC]. | 1201 |
| 3300-0091 | Roll-up door over wheel well 5' wide ROM door. Painted job color. Locate in [#LOC]. | 1509 |
| 3300-0092 | Door double 3-point vertical hinged diamond plate. Location(s): [#LOC]. | 1779 |
| 3300-0096 | Keyed roll-up compartment door with #J236 key. Location(s): [#LOC] | 157 |
| 3300-0097 | Keyed compartment door latch with #J236 key. Location(s): [#LOC] | 89 |
| 3300-0103 | Door double vertical hinged smooth plate sanded. Location(s): [#LOC]. | 925 |
| 3300-0120 | Electric lock for a ROM roll-up door (EA). The door to lock on both sides of compartment as applicable. Includes manual 1250 key lock. Location(s): [#LOC] | 685 |
| 3300-0133 | Door single horizontal hinged drop-down sanded smooth plate. Location(s): [#LOC]. | 530 |
| 3300-0134 | Door single horizontal hinged lift-up box pan configuration painted. Includes double D-rings due to width of the door. Location(s): [#LOC] | 809 |
| 3300-0135 | Door double 3-point vertical hinged smooth plate sanded. Location(s): [#LOC]. | 1844 |
| 3300-0138 | Keyed compartment door latch with #CH751 key. Location(s): [#LOC] | 89 |
| 3300-0139 | Door double 3-point horizontal hinged painted. Location(s): [#LOC]. Lower door should act as an exterior writing surface w/ adjustable angles. The paddle latch on the second door shall not protrude past the edge of the door. | 1844 |
| 3300-0140 | Door single horizontal hinged drop down diamond plate. Location(s): [#LOC]. | 502 |
| 3300-0149 | Roll-up door a tall 2.6' wide ROM door. Satin finish. Locate in [#LOC]. | 1199 |
| 3300-0151 | Drip pan with drain for a ROM roll-up door (EA). Location(s): [#LOC]. | 242 |
| 3300-0164 | Door double vertical hinged w/rotary latches - painted . Location(s): [#LOC] | 925 |

| Item No. | Description | |
|---|---|---|
| 3300-0165 | Door double vertical hinged w/rotary latches - smooth plate sanded. Location(s): [#LOC]. | 925 |
| 3300-0166 | Door double vertical hinged w/rotary latches - diamond plate. Location(s): [#LOC] | 832 |
| 3300-0167 | Door double 3-point vertical hinged w/rotary latches - painted. Location(s): [#LOC] | 1844 |
| 3300-0169 | Door double 3-point vertical hinged w/rotary latches - smooth plate sanded. Location(s): [#LOC] | 1844 |
| 3300-0170 | Door double 3-point vertical hinged w/rotary latches - diamond plate. Location(s): [#LOC]. | 1779 |
| 3300-0171 | Door double 3-point horizontal hinged w/rotary latches - painted. Location(s): [#LOC]. Upper door to lift-up. Lower door to drop down w/adjustable door stays for door to act as an exterior writing surface. | 1844 |
| 3300-0174 | Keyed roll-up compartment door with #CH751 key. Location(s): [#LOC]. | 157 |
| 3300-0177 | Door single horizontal hinged drop down painted. Door will have 2 D-ring handles. Location(s): [#LOC]. | 862 |
| 3300-0181 | All side body compartment doors shall be lap style and feature a 12 gauge 304L stainless steel outer skin with a stainless steel full inner box pan. Each door shall have a full length 12 gauge polished stainless steel continuous hinge with a 1/4" stainless steel center pin. Hinge pins shall be tack welded at the end to eliminate hinge pin drift and shall be bolted to the body and to the door for easy replacement and adjustment and provided with extruded closed cell automotive type rubber moldings. The door latching mechanisms shall be dead bolt rod type Eberhard locking 206 bent D-ring handles and N.Y.P.D. style Medeco locks. The compartment door handles shall be attached to outer door panel with screws. In addition all exterior doors shall have stainless steel hasp installed to secure doors in case of door latching mechanism failure. | 16246 |
| 3300-0182 | Keyed compartment door latch with Medeco latch & key One (1) extra key shipped loose | 94 |
| 3300-0195 | Door roll up tall (greater than 45") with painted finish Amdor. Location(s):[#LOC]. | 2356 |
| 3300-0196 | Door double vertical hinged painted includes (2) gas shock-style hold-open device IPOS. Location(s): [#LOC]. | 997 |
| 3300-0202 | Door single horizontal hinged drop-down sanded smooth plate. Location(s): [#LOC]. | 530 |
| 3300-0206 | Additional roll up door stop latches shall be mounted for B1 at a raised location aligned with the bottom of the ladder tunnel. The raised latches/hooks shall not be included as part the door ajar circuit. | 82 |
| 3300-0208 | Roll-up door over wheel well 39" wide ROM door. Satin finish. Locate in [#LOC]. | 1169 |
| 3300-0211 | Door to be notched for 3" DJ hose. Notch to be 5" W x 1" H. Location: top of B2 officer side door. This door is to be the "first opened" door as shown on drawing. | 333 |
| 3300-0213 | All side body compartment doors shall be lap style and feature a 12 gauge 304L stainless steel outer skin with a stainless steel full inner box pan. Each door shall have a full length 12 gauge polished stainless steel continuous hinge with a 1/4" stainless steel center pin. Hinge pins shall be tack welded at the end to eliminate hinge pin drift and shall be bolted to the body and to the door for easy replacement and adjustment and provided with extruded closed cell automotive type rubber moldings. The door latching mechanisms shall be dead bolt rod type Eberhard locking 206 bent D-ring handles and N.Y.P.D. style Medeco locks. The compartment door handles shall be attached to outer door panel with screws. In addition all exterior doors shall have a 4.5" high stainless steel hasp installed to secure doors in case of door latching mechanism failure. Stainless steel protector plate below latch to protect paint from key damage | 16200 |
| 3300-0215 | Additional roll up door stop latches (PR) shall be mounted at a raised location aligned with the reduced depth transition area. The raised latches/hooks shall not be included as part the door ajar circuit. Location(s): [#LOC]. | 82 |
| 3300-0219 | Install dealer supplied roll up doors. The roll up doors for location(s): [#LOC]. shall be dealer supplied. These door kit(s) as supplied will be complete and correct for compartment(s) specified. E-ONE manufacturing shall install these dealer supplied ROM roll up door(s). | 261 |
| 3300-0222 | Double door to have latch handle extension installed on secondary door's interior latch with "PULL" tags. Location(s): [#LOC] | 67 |
| 3300-0228 | Door double 3-point vertical hinged w/rotary latches - painted. Location: [#LOC]. D-ring primary door located rearward ipo standard. Door double 3-point vertical hinged w/rotary latches - painted. | 1844 |
| 3300-0239 | Door single vertical hinged painted with the hinge reversed so the door opens opposite of standard. Location(s): [#LOC] | 832 |
| 3300-0245 | Roll-up door over wheel well 4.5' wide ROM door. Satin finish. Locate: 1 ea for L3/R3 & L4/R4. | 1467 |
| 3300-0248 | There shall be single piece compartment door drip rail provided over L1/L2 L5/L6 R1/R2 & R4/R5. Only available with (2) consecutive compartments with like doors. | 224 |
| 3300-0253 | Drip pan with end plates(E-ONE style) for a roll-up door with drain hose. Location(s): [#LOC]. | 377 |
| 3300-0254 | Roll-up door a tall 6' wide ROM door. Satin finish. Locate in [#LOC]. | 1556 |

| Item No. | Description | |
|---|---|---|
| 3300-0255 | Door double expanded metal (material aluminum) and verticaly hinged. Includes bolt latch and door hold open device. Door to be located inside of body compartment and as close as possible behind exterior body compartment access door. Minimum depth behind expanded doors to be 24 inches. Finish: Sanded aluminum. Locate: R4: forward of partition. | 1038 |
| 3300-0256 | Increase in size of the stainless steel door hasp system footprint to include an area to hang a carabineer with a safety cable (included). NYPD only. | 410 |
| 3300-0258 | Door roll up tall (greater than 45") with stainless steel door bar and painted finish ROM. Location(s): [#LOC]. | 2018 |
| 3300-0259 | Door roll up tall (greater than 45 in.) with painted finish Hansen. Location(s): [#LOC] | 2098 |
| 3300-0261 | Door roll up tall (greater than 45 in.) with satin finish Hansen. Location(s): [#LOC]. | 1608 |
| 3300-0262 | Door double vertical hinged painted. Location: B1 Primary door with the D-ring latch shall be positioned to the driver side so the first compartment door can be opened on the primary side which the rear discharge poisitioned to the officer side on rear also in use on scene. | 925 |
| 3300-0263 | Door roll up short (up to 45 in.) with satin finish Hansen. Location(s): [#LOC]. | 1012 |
| 3300-0264 | Door double 3-point vertical hinged w/dual rotary latches. Note exterior D-Ring latches on primary and secondary doors.- painted. Location(s): [#LOC]. | 2413 |
| 3300-0274 | Additional roll up door stop latches (PR) shall be mounted at a raised location aligned just above the dump. The raised latches/hooks shall not be included as part the door ajar circuit. Location(s): just above the dump for the door to be at the top of the dump. | 82 |
| 3300-0275 | Roll-up door. A 2' wide locking ROM door shall be provided. Satin finish. Locate: Inside walk in body on driver side rear most cabinet. | 1336 |
| 3300-0285 | Door double 3-point vertical hinged w/rotary latches. Door to be inside of walk in body to provide for access to exterior body compartment. Finish is diamond plate. Location(s): [#LOC] | 1424 |
| 3305-0000 | Diamond plate generator cover. | 1121 |
| 3305-0006 | All hand rails (as applicable) are to have a rubber insert. Includes cab (N/A on commercial chassis) pump module and body. | 1985 |
| 3305-0009 | Compartment underbody with slide-out tray.(**Obsolete** See Sales code 3380-0078) Includes drop down front door with push button latch(es). [#LOC] | 2133 |
| 3305-0010 | Compartment underbody. Includes drop down front door with push-button latches. Locate [#LOC]. | 1386 |
| 3305-0065 | Compartment underbody with slide-out tray. Includes drop down front door with D-ring latch(es). [#LOC] | 2461 |
| 3305-0070 | Diamond plate portable pump cover. | 1366 |
| 3305-0131 | SS underbody compartment with slide-out tray [#LOC]. Includes SS access door with bent D-ring latch. | 2927 |
| 3305-0132 | SS underbody compartment. Includes drop-down front door with D-ring latch. Locate [#LOC]. | 2196 |
| 3305-0135 | Cargo Net Cover for R2 rear of the divider. Cargo netting will be 2"x2" squares. | 917 |
| 3305-0153 | A cover will be located over the generator in the pan. Cover will allow air flow while keeping the generator from sitting in the direct weather. Cover will have mesh on all 4 sides welded to Dia Plate. | 1374 |
| 3305-0208 | Cargo net for inside compartment for containing cribbing in compartment when door is opened. Net to permanently fasten on rearward wall just inside door opening and fasten with buckle straps on forward wall just inside door opening. Cargo netting will be 3" x 3" squares. Location: [#LOC]. | 917 |
| 3305-0216 | Cargo Net Cover for R1 lower shelf rearward of partition to hold cribbing in place. | 538 |
| 3305-0272 | Cargo Net Cover for for poly storage box in L4. Cargo netting will be 2"x2" squares. | 917 |
| 3305-0313 | Access door. One (1) lift-up roof top access door shall be provided on the body roof above the reel(s). The access & door shall be sized to best accommodate reel access & minor service. The door shall be provided with a non-locking latch hold open device and a door activated compartment light shall be included wired to the door ajar indicator in the cab. Construction shall be aluminum treadplate. In the case where (2) reels are located side by side within (1) compartment the door shall be sized to accommodate access to both reels. | 1047 |
| 3305-0329 | Cargo net black 2"x2" squares with buckles. Locate: R4. Net to be permanently fasten on aft compartment wall just inside door opening and spans forward to closest partition. | 917 |
| 3310-0017 | Auxiliary jack pad 24X24 (PR) with side mounted handle. Includes mounting brackets. | 1299 |
| 3310-0021 | Step flop down rear 24" wide rung type (EA). | 637 |
| 3310-0049 | Auxiliary jack pad 24X24 (4) with side mounted handles. Includes welded mounting brackets. | 2595 |
| 3310-0215 | Transverse compartment floor to be extended out to door opening in L1. | 467 |
| 3310-0246 | Auxiliary jack pad 24X24 (4) with side mounted handle. Includes (2) double mounting brackets welded in place. | 2595 |
| 3310-0296 | Auxiliary jack pad 24X24 (4) with handle welded to top surface of pad. Includes mounting brackets. | 2595 |
| 3310-0303 | Auxiliary jack pad 24X24 (4) with 20 degree formed handle. Includes (4) mounting brackets. | 2595 |
| 3310-0354 | Auxiliary jack pad 24X24 (4) with 20 degree formed handle. Includes (2) double mounting brackets. | 2150 |

| Item No. | Description | |
|---|---|---|
| 3310-0398 | Auxiliary jack pad 24X24 (4) with 20 degree formed handle. Includes (4) mounting brackets. Brackets to be mounted so the formed handles are flush with edge of rubrail. | 3141 |
| 3315-0005 | 2-Bottle DOT 6000 PSI Breathing Air Cascade System with air panel bottle rack and all associated air lines valves and gauges. Rack and bottles to be located in [#LOC]. | 14061 |
| 3315-0006 | 4-Bottle DOT 6000 PSI breathing air cascade system with air panel bottle rack and all associated air lines valves and gauges. Rack and bottles to be located [#LOC]. | 19747 |
| 3315-0007 | 6-Bottle DOT 6000 PSI Breathing Air Cascade System with air panel bottle rack and all associated air lines valves and gauges. Rack and bottles to be located in [#LOC]. | 26365 |
| 3315-0008 | 2-Bottle ASME 6000 PSI Breathing Air Cascade System with air panel bottle rack and all associated air lines valves and gauges. Rack and bottles to be located in [#LOC]. | 17286 |
| 3315-0009 | 4-Bottle ASME 6000 PSI Breathing Air Cascade System with air panel bottle rack and all associated air lines valves and gauges. Rack and botles to be located in [#LOC]. | 25520 |
| 3315-0010 | 6-Bottle ASME 6000 PSI Breathing Air Cascade System with air panel bottle rack and all associated air lines valves and gauges. Rack and botles to be located in [#LOC]. | 35091 |
| 3315-0017 | Breathing Air Compressor Bauer 15 HP 19.0 CFM 6000 PSI. The compressor shall be located in the middle of the transverse rear wheel well compartment. Compressor shorepower connection and transfer switch required. | 60962 |
| 3315-0018 | Breathing Air Compressor Bauer 20 HP 25.2 CFM 6000 PSI. The compressor shall be located in the middle of the transverse rear wheel well compartment. Compressor shorepower connection and transfer switch required. | 62060 |
| 3315-0021 | Utility Air Compressor Atlas Copco 5.5 HP 20 CFM @145 PSI. Location: [#LOC]. | 6295 |
| 3315-0023 | Storage rack for three DOT or ASME air bottles. Mounted either vertical or horizontal in a compartment or top of body. Locate [#LOC]. | 567 |
| 3315-0025 | 6-Bottle ASME 6000 PSI Breathing Air Cascade System with air panel bottle rack and all associated air lines valves and gauges. Rack and botles to be located in L5. There shall also be a Bauer CFS2 two (2) bottle fill station located in R5. | 43939 |
| 3315-0026 | Pasco County Air System. There will be bracing for the 19.2 Bauer Open compressor centered between L1/R1 and a 6 bottle cascade system 2 high x 3 wide directly behind B1 centered. Need cut-out and bracing for a Space Saver Fill station in B1 offset to officer side. Generator sizing needs to be verified based on Air Compressor HP and all other AC loads. | 368 |
| 3315-0027 | 3-Bottle ASME 6000 PSI Breathing Air Cascade System with air panel bottle rack and all associated air lines valves and gauges. Rack and bottles to be located in B1 rearward. Bauer CFS2 two (2) bottle fill station shall be located in B1 with control panel. | 30088 |
| 3315-0029 | Air System. There will be bracing for the 14cfm Mako compressor centered between L1/R1 and a 9 bottle cascade system 3 high x 3 wide directly behind B1 centered. Need cut-out and bracing for a Space Saver Fill station in B1 offset to officer side. Dealer supplied air system. Generator sizing needs to be verified based on Air Compressor HP and all other AC loads. | 368 |
| 3315-0031 | Storage rack for four (2x2) DOT or ASME air bottles. Locate [#LOC]. | 2260 |
| 3315-0034 | Bauer BP13H-E3 truck compressor module mobile skid with 4 DOT type UN bottles Located in L3/R3 with "tilt out filter design" and Bauer CFSII-2 fill station with "top mount flush fill panel cascade located in R4. Purification cartridge(s) tilt feature shall be located in L3 and the compressor and controls shall be located in R3. | 59343 |
| 3315-0041 | Storage rack for Six (3Wx2T) DOT or ASME air bottles. Locate between L2/R2 over rear axle and provide access to bottles thru B1 rear wall. | 3395 |
| 3315-0043 | 6-Bottle DOT 6000 PSI Breathing Air Cascade bottles with air lines routed to fill station location in L4 forward area. Rack and bottles to be located in forward roof top boxs (3) bottles on driver side and (3) bottles on officer side. Note: No control panel included. | 12597 |
| 3315-0047 | Storage rack for two DOT or ASME air bottles. Mounted either vertical or horizontal in a compartment or top of body. Locate: [#LOC]. | 567 |
| 3315-0053 | 4-Bottle DOT 6000 PSI breathing air cascade system with air panel bottle rack and all associated air lines valves and gauges. Rack and bottles to be located [#LOC]. | 18684 |
| 3315-0054 | 4-Bottle ASME 6000 PSI Breathing Air Cascade System with air panel bottle rack and all associated air lines valves and gauges. Rack and bottles to be located in [#LOC]. | 26695 |
| 3315-0055 | SpaceSaver M2792M two (2) bottle vertical fill station. Fill station to be located in [#LOC]. | 14714 |
| 3315-0056 | Bauer CFS5.5-2M two (2) bottle fill station. Fill station to be located in [#LOC]. | 15231 |
| 3315-0057 | Haskel Booster Pump 6000 psi #58985-2 or equivalent | 15955 |
| 3315-0058 | Mako MSCFS2 two (2) bottle fill station. Fill Station will be located in [#LOC]. | 16552 |

| Item No. | Description | |
|---|---|---|
| 3315-0060 | Breathing air system with (6) ASME bottles. Includes: (1) 35.9 cfm 6000 psi compressor with (TBD 208V or 230V voltage) 3 phase soft start motor & P10 Securus (4) vertical Space Saver 2 bottle fill stations. (6) 6000 psi ASME storage bottles control fill panel all associated plumbing valves and gauges to accommodate system. Compressor Located between L1/L2 & R1/R2 (2) ASME bottles located on aft wall of L4 (2) ASME bottles located on aft wall of R4 (2) ASME bottles located on rear wall of B1 (2) SpaceSaver fill stations located in L4 forward (2) SpaceSaver fill stations located in R4 forward Control panel located in B1 E-One fabricated enclosure. Purification to be relocated to accommodate servicing. | 140915 |
| 3315-0061 | Enclosure to mount air system control panel with 6 ASME bottles and (4) 2 bottle SpaceSaver fill stations. Finish: sanded aluminum. Location: B1 | 1125 |
| 3315-0062 | 1-Bottle DOT 6000 PSI tool air system with air panel bottle and all associated air lines valves and gauges (Breathing Air Systems supplied).Bottle located in L1 rearward back wall. Air Panel located in L3 upper between reels. | 4583 |
| 3315-0063 | Storage enclosure for breathing air system's control panel shall be provided. Panel for (1) DOT tool system. Located in L3 between reels as high as possible. | 446 |
| 3315-0064 | Storage rack for One (1) DOT air bottle. Mounted vertical top of body in compartment L1 rearward to back wall. | 665 |
| 3315-0065 | 2-Bottle DOT 6000 PSI tool air cascade system bottle rack associated air lines valves and gauges. Rack and bottles to be located in [#LOC]. | 14061 |
| 3315-0067 | Bauer BP13H-E3 truck compressor module mobile skid module. Includes soft start feature. Located in L3/R3 with "tilt out filter design". Purification cartridge(s) tilt feature shall be located in B1 (behind lift up stair case) and the compressor and controls shall be located in R3. Installation requires the elimination of the back walls of compartments L3/R3 for installation and airflow requirements. | 44180 |
| 3315-0069 | 8-Bottle DOT 6000 PSI Breathing Air Cascade System with air panel bottle rack and all associated air lines valves and gauges. Rack and bottles to be located (4) each in compartments L2 and R2. | 32417 |
| 3315-0070 | High pressure breathing air outlet with HP regulator supply & regulated pressure gauges and shut off. Includes 6000 PSI quick disconnect and cap. Located on breathing air panel and plumbed into the on board cascade system. For off-filling of cascade systems with onboard compressor at scene or station houses. | 2507 |
| 3315-0071 | Storage enclosure for breathing air system's control panel shall be provided. Panel for (3) DOT breathing air system. Located in L4 above the fill station.. | 446 |
| 3315-0072 | 3-Bottle DOT 6000 PSI Breathing Air Cascade System with Sidewinder Fill Station in L3 air panel above fill station and all associated air lines valves and gauges. | 19732 |
| 3315-0073 | Storage enclosure for breathing air system's control panel shall be provided. Panel for (3) DOT breathing air system. Located in L3 above the fill station.. | 446 |
| 3315-0075 | Storage rack for Two DOT or ASME air bottles. A dual bottle storage rack with lifting eyes shall be provided so that the rack with storage bottles installed can be lifted from the mounting surface for service. Rack to accommodate bottles configured side by side horizontally. Locate: Body roof. Note: Bottles not included. | 1720 |
| 3315-0076 | Raceway to accommodate air lines routed thru body roof. Provision to accommodate dealer supplied and installed air lines. Option shall be designed to prevent water intrusion into compartment from roof top opening. Locate: Forward area of L4 and as close to rear of compartment as possible. | 673 |
| 3315-0080 | BreathingAir Systems cascade system: Shall consist of a Soft Start 3 phase 10 HP 13 CFM compressor P5 Securus tilt out purification remote controls electric carbon monoxide monitor with calibration kit (1) one SpaceSaver M2794 4 bottle fill station control panel mounted in an E-One fabricated enclosure A (6) DOT bottle cascade system roof mounted in E-One supplied racks 3 bottles each side in forward roof top compartments. Also includes: 60 FT of remote fill hose panel fill connection panel air outletfrom cascade all plumbing to complete install. Compressor pkg located: L1/R1 centered. SpaceSaver fill station and controls Located: R1. | 79280 |
| 3315-0081 | Enclosure aluminum construction to accommodate air system control panel with 6 storage bottles. Finish: sanded aluminum. Location: R1 | 1125 |
| 3315-0082 | Storage racks (PR) for DOT or ASME air bottles shall be provided. A pair of three (3) bottle storage racks with lifting eyes shall be provided so that the rack with storage bottles installed can be lifted from the mounting surface for service. Racks to accommodate bottles configured side by side horizontally. Locate: Body roof compartment with (1) over L2/L3 & (1) over R2/R3. Note: Bottles not included. | 4558 |
| 3320-0001 | SCBA large tube bottle rack. Location: [#LOC]. | 113 |
| 3320-0002 | SCBA Small Tube Bottle Rack. Location: [#LOC] | 95 |
| 3320-0005 | SCBA Bottle Storage. (4) Cast Product SCBA bottle storage with gasketed doors. (2) each side in rear wheel well area. | 830 |

| Item No. | Description | |
|---|---|---|
| 3320-0006 | SCBA Bottle Storage. (3) Cast Product SCBA bottle storage with gasketed doors. (2) officer side and (1) driver side (fwd) in rear wheel well area. | 1242 |
| 3320-0007 | SCBA Bottle Storage. (7) E-ONE SCBA bottle storage with hinged doors (doors to match wheel well material) with push button latches. (4) officer side and (3) driver side in wheel well area. | 1328 |
| 3320-0008 | SCBA Bottle Storage. (8) E-ONE SCBA bottle storage with hinged doors (doors to match wheel well material) with push button latches. (4) officer side and (4) driver side in wheel well area. | 1584 |
| 3320-0009 | SCBA Bottle Storage. (8) Cast Product SCBA bottle storage with gasketed doors. (4) each side in rear wheel well area. | 1656 |
| 3320-0010 | SCBA Bottle Storage. (4) Cast Product SCBA bottle storage doors. (2) each side in rear wheel well area. Each tube to include a ribbed rubber insert mounted to rear of tube. | 746 |
| 3320-0012 | SCBA bottle storage. (7) E-ONE SCBA bottle storage with hinged stainless steel doors with push-button latches. (4) officer side and (3) driver side in wheel well area. | 1450 |
| 3320-0014 | SCBA Bottle Storage. (6) E-ONE SCBA bottle storage with hinged doors (doors to match wheel well material) with push button latches. (3) officer side and (3) driver side in wheel well area for use with dual tank fills. | 1296 |
| 3320-0027 | SCBA Bottle Storage. (7) E-ONE SCBA bottle storage with hinged doors (doors to match wheel well material) with push button latches. (4) officer side and (3) driver side in wheel well area. The rear door on driver side will be a single door and will not cover the fuel fill. | 1572 |
| 3320-0030 | SCBA Bottle Storage. (8) E-ONE SCBA bottle storage with hinged stainless steel doors with push-button latches. (4) officer side and (4) driver side in wheel well area. | 1063 |
| 3320-0031 | Zico metal QUIC-STORAGE bottle rack for large bottles for 6.1" to 7.4" cylinder. Locate in [#LOC]. Each unit will have straps to hold the bottle in and all top units will have a flat top. Each unit will be bolted together and be [#COL] PVC coated. | 155 |
| 3320-0032 | Zico metal QUIC-STORAGE for small bottles 5.3" to 5.8" cylinder. Locate in [#LOC]. Each unit will have straps to hold the bottle in an angle floor to hold bottle in place and all top units will have a flat top. Each unit will be bolted together and be [#COL] PVC coated. | 155 |
| 3320-0040 | SCBA bottle storage. (4) Fire Shopp style SCBA bottle storage with hinged brushed stainless steel doors with push-button latches. (2) officer side and (2) driver side in the rear wheel well area. | 1407 |
| 3320-0042 | SCBA Bottle Storage. (8) Cast Product SCBA bottle storage with gasketed doors with locking latches. (4) each side in rear wheel well area. | 1921 |
| 3320-0044 | SCBA Bottle Storage. (6) E-ONE SCBA bottle storage with hinged stainless steel doors with push button latches. (3) officer side and (3) driver side in wheel well area. There will (2) bottles forward of the rear axle and (1) rearward. | 944 |
| 3320-0050 | SCBA Bottle Storage. (7) E-ONE SCBA bottle storage with hinged polished stainless steel doors with push button latches. (4) officer side and (3) driver side in wheel well area. | 1791 |
| 3320-0053 | SCBA Bottle Storage. (4) E-ONE SCBA bottle storage with hinged doors (doors to match wheel well material) with push button latches. (2) officer side and (2) driver side in wheel well area. | 793 |
| 3320-0061 | SCBA Bottle Storage. (4) Cast Product SCBA bottle storage doors. (2) each side in rear wheel well area. | 746 |
| 3320-0067 | SCBA Bottle Storage. (5) Cast Product SCBA bottle storage with gasketed doors. (3) officer side - (2) over forward axle and (1) at rear of wheel well area. (2) driver side (over forward axle) in rear wheel well area. | 1037 |
| 3320-0069 | PAC Cylinder Mate. Locate in [#LOC]. Each unit will be black in color and have a strap to secure bottle. | 266 |
| 3320-0072 | SCBA Bottle Storage. (8) Cast Product gasketed doors with (7) SCBA bottle storage tubes. (4) Cast Product SCBA bottle storage with gasketed doors on officer's side and (3) Cast Product SCBA bottle storage tubes with (4) gasketed doors on driver's side. Recessed fuel fill to be protected behind the rear driver side SCBA door. | 1656 |
| 3320-0084 | Extinguishers label to be mounted on the Officer's side rear SCBA bottle storage door IPOS. | 46 |
| 3320-0087 | SCBA Bottle Storage. (4) E-ONE SCBA bottle storage with hinged doors. Doors are smooth aluminum plate painted job color (doors only) with push button latches. (2) officer side and (2) driver side in wheel well area. | 1114 |
| 3320-0090 | SCBA bottle storage. (7) E-ONE SCBA bottle storage hinged doors. Doors are smooth aluminum plate painted job color (doors only) with push button latches. (4) Officer side and (3) driver side in wheel well area. | 1948 |
| 3320-0091 | SCBA Bottle Storage. (6) E-ONE SCBA bottle storage with hinged doors (doors to match wheel well material) with push button latches. (3) officer side and (3) driver side in wheel well area. All doors to be hinged forward. | 2363 |
| 3320-0092 | PAC Cylinder Mate. Each unit will be black in color and have a strap to hold the bottle in. Locate: Inside rear body drivers side on top of counter top in rear most corner. | 266 |

| Item No. | Description | |
|---|---|---|
| 3320-0101 | SCBA bottle storage. (7) E-ONE SCBA bottle storage with hinged stainless steel doors with push-button latches. (4) officer side and (3) driver side in wheel well area. Left side rear door also covers the fuel pocket. | 1568 |
| 3320-0103 | SCBA Bottle Storage. (7) E-ONE SCBA bottle storage with hinged doors (doors to match wheel well material) with 1/4 turn latches. (4) officer side and (3) driver side in wheel well area. | 1328 |
| 3320-0105 | Storage sleeve for small portable O2 bottle includes securing device. Bottle size is 4.5" dia X 20" long. Finish is sanded aluminum unless otherwise specified. Locate: R3 Forward of SCBA bottles. | 137 |
| 3320-0106 | SCBA Bottle/Extinguisher Storage. (8) E-ONE SCBA/Ext. bottle storage with hinged doors (doors to match wheel well material) with push button latches. (4) officer side and (4) driver side in wheel well area. Driver side to accommodate four (4) Scott 45 min 4500 PSI bottles. Officer side to accommodate two(2)Amerex model A411 20# ABC Dry Chem extinguishers and Two(2) Amerex model A240 2.5 gal pressurized water extinguishers. Officer side to load one ABC drychem and One H2O extinguisher in forward storage and same in rearward storage arraged thus to provide space for the different nozzles on extinguishers. | 1636 |
| 3320-0110 | SCBA Bottle Storage. (4) E-ONE SCBA bottle storage with hinged doors (doors to match wheel well material) with push button latches. (4) officer side only. | 793 |
| 3320-0111 | SCBA Bottle Storage. (4) E-ONE SCBA bottle storage with hinged doors (doors to match wheel well material) with push button latches. (4) driver side only. | 793 |
| 3320-0112 | SCBA Bottle Storage. (10) E-ONE SCBA bottle storage with hinged stainless steel doors with push button latches. (5) officer side and (5) driver side in wheel well area. | 2320 |
| 3320-0135 | SCBA Bottle Storage. (4) Cast Product SCBA bottle storage with gasketed doors. Officer side in rear tandem wheel well area. | 830 |
| 3320-0136 | SCBA/Wheel Chock Storage. (3) E-ONE SCBA bottle storage with hinged doors (doors to match wheel well material) with push button latches. (2) officer side and (1) driver side in wheel well area. (1) wheel chock storage compartment with hinged door and push button latch driver side in forward wheel well area. (2) wheel chocks to be stored per compartment. Does not include wheel chocks. | 1682 |
| 3320-0140 | SCBA Bottle Storage. (4) E-ONE SCBA bottle storage with hinged doors (doors to match wheel well material) with push button latches. (2) officer side and (2) driver side in forward wheel well areas. | 793 |
| 3320-0148 | SCBA Bottle Storage. (12) E-ONE SCBA bottle storage with hinged doors (doors to match wheel well material) with push button latches. (6) officer side in 2 (3) bottle pods and (6) driver side in 2 (3) bottle pods in wheel well areas. For use on commercial units or apparatus without a wheel well located fuel fill. May not be compatible with wheel well located receptacles aux. turn signals or back up lighting if located in wheel wells. | 3156 |
| 3320-0154 | SCBA storage modification. Wheel well storage area for SCBA bottles in wheel well area to be modified to accomodate Scott Safety Model 5.5 75 minute 5500 psi NxG Snap-Change Valve Bottle ref Scott p/n 200976-01. Non Standard depth for SCBA Bottle Storage. | 273 |
| 3320-0161 | SCBA Bottle Storage. (4) E-ONE SCBA bottle storage with hinged doors (doors to match wheel well material) with push button latches. (2) officer side and (2) driver side in rearward wheel well areas. | 793 |
| 3320-0163 | SCBA Bottle Storage. (9) E-ONE SCBA bottle storage with hinged doors (doors to match wheel well material) with push button latches. (6) officer side in 2 (3) bottle pods and (3) driver side in a single (3) bottle pod located rearward in the wheel well area. Driver side forward wheel well area to accommodate one (1) wheel chock storage to fit two (2) Ziamatic model SAC-44-E wheel chocks. (not included). For use on commercial units or apparatus without a wheel well located fuel fill. May not be compatible with wheel well located receptacles aux. turn signals or back up lighting if located in wheel wells. | 3156 |
| 3320-0164 | SCBA bottle storage. (7) E-ONE SCBA bottle storage with hinged stainless steel doors & push-button latches. Locate: Rear body wheel well area with (4) four on officer side & (3) three on driver side. Rear door on driver side sized to not cover recessed fuel fill. | 1572 |
| 3320-0167 | Mounting bracket to accommodate locating SCBA bottle bracket at a 45 degree position from the wall. Bracket can accommodate 1 or 2 bottle brackets. Locate: next to or between bench or fold down seating. | 213 |
| 3320-0168 | SCBA / Wheel Chock Storage on tandem rear axle chassis. (9) nine E-ONE SCBA bottle storage with hinged doors (doors to match wheel well material) with push button latches. (6) six officer side and (3) three driver side in wheel well area. (1) one wheel chock storage compartment with hinged door and push button latch located on driver side in forward wheel well area. (2) Wheel chocks to be stored in compartment. Wheel chocks not include. | 3323 |
| 3320-0175 | SCBA Bottle Storage. (10) E-ONE SCBA bottle storage with hinged doors (doors to match wheel well material) with push button latches. (6) officer side and (4) driver side in wheel well area. | 2022 |
| 3320-0191 | Wheel well storage area door(s) to be stainless steel in place of standard. | 372 |

| Item No. | Description | |
|---|---|---|
| 3320-0193 | SCBA Bottle Storage. (7) E-ONE SCBA bottle storage with hinged doors (doors to match wheel well material) with push button latches. (6) officer side in 2 (3) bottle pods and (1) driver side in a single (1) bottle pod located rearward in the wheel well area. Driver side forward wheel well area to accommodate one (1) wheel chock storage to fit two (2) NON-folding AC-44 Zico wheel chocks. (not included). For use on commercial units or apparatus without a wheel well located fuel fill. May not be compatible with wheel well located receptacles aux. turn signals or back up lighting if located in wheel wells. | 3156 |
| 3325-0000 | E-ONE designed PTO driven HRT system 9000-10500 PSI system with 3 tool capability. | 39643 |
| 3325-0001 | E-ONE designed PTO driven HRT system 9000-10500 PSI system with 4 tool capability. | 48513 |
| 3325-0002 | E-ONE designed 2 PTO driven HRT system 9000-10500 PSI system with 6 tool capability. | 72943 |
| 3325-0003 | E-ONE designed PTO driven HRT system 9000-10500 PSI system with 2 tool capability. | 36239 |
| 3325-0004 | XRT Hydraulic tool system with 2 tool capability. 10500 PSI system. Includes selector vlv for each reel hyd res / filter and remote cooler. Requires gen with XRT hyd pump. | 24918 |
| 3325-0009 | XRT Hydraulic tool system with 3 tool capability. 5000 PSI system. Includes selector vlv for each reel hyd res / filter and remote cooler. Requires gen with XRT hyd pump. | 28007 |
| 3325-0010 | XRT Hydraulic tool system with 2 tool capability. 5000 PSI system. Includes selector vlv for each reel hyd res / filter and remote cooler. Requires gen with XRT hyd pump. | 29181 |
| 3325-0014 | XRT Hydraulic tool system with 3 tool capability. 10500 PSI system. Includes selector vlv for each reel hyd res / filter and remote cooler. Requires gen with XRT hyd pump. | 28007 |
| 3325-0018 | There will be a thru shaft for the generator to work off the same PTO as HRT system. | 2488 |
| 3325-0021 | Genesis Mach III Hydraulic tool system with 2 tool capability. 10000 PSI system. Requires Harrison gen with IHT configuration. Pump location: [#LOC]. | 17348 |
| 3325-0022 | XRT Hydraulic tool system with 1 tool capability. Includes selector vlv for each reel hyd res / filter remote cooler and hydraulic pump. Requires Smart Power Liberator generator. | 22093 |
| 3325-0024 | XRT PTO driven HRT system 5000 PSI system with 2 tool capability. | 33032 |
| 3325-0028 | Holmatro / Harrison PTO driven HRT system 10500 PSI system with 4 tool capability. NOTE: Option to be utilized with CORE connections not included and requires additional sales code. | 34201 |
| 3325-0029 | Hydraulic bulkhead fitting for Holmatro CORE (fitting comes with hinged cover) shall be mounted to an angled mounting bracket which is mounted to the top of the driver side gravel shield. The mounting bracket shall enclose the lead lines feeding the rear of the bulkhead fitting as mounted on the angled bracket. The bracket shall be made of 1/8 aluminum diamond plate. Includes Core Technology hose (up to 10000 PSI). The hose shall run from Holmatro pump to the driver side front bumper gravel shield. | 4565 |
| 3325-0030 | Hydraulic bulkhead fitting for Holmatro CORE (fitting comes with hinged cover) shall be mounted to an angled mounting bracket which is mounted to the top of the officer side gravel shield. The mounting bracket shall enclose the lead lines feeding the rear of the bulkhead fitting as mounted on the angled bracket. The bracket shall be made of 1/8 aluminum diamond plate. Includes Core Technology hose (up to 10000 PSI). The hose shall run from Holmatro pump to the officer side front bumper gravel shield. | 4565 |
| 3325-0031 | Hydraulic bulkhead fitting for Holmatro CORE (fitting comes with hinged cover). Includes Core Technology hose (up to 10000 PSI). The hose shall run from Holmatro pump to the rear body on the driver side below the DOT light. | 4565 |
| 3325-0032 | Hydraulic bulkhead fitting for Holmatro CORE (fitting comes with hinged cover). Includes Core Technology hose (up to 10000 PSI). The hose shall run from Holmatro pump to the rear body on the officer side below the DOT light. | 4565 |
| 3325-0033 | A wireless remote will be hooked up to the HRT system. There will be up to 4 wireless controllers located near reels. System antennas and control module will be located in the dunnage area. | 5052 |
| 3325-0034 | Genesis Outlaw hydraulic electric pump. Pump to be located [#LOC]. | 13974 |
| 3330-0000 | Lower handrails for both cab and body to be rubber inlaid | 640 |
| 3330-0002 | Slide-out platform rollerless. Includes chrome grab handle centered on the front face of the platform (includes hand rail as applicable). Located [#LOC]. | 1514 |
| 3330-0008 | Handrail up to 12". Location [#LOC]. | 129 |
| 3330-0013 | Platform with 500lbs. slides. Locate [#LOC]. Platform sized as required per location. I includes a chrome grab pull handle and a body mounted handrail (as applicable for body mounted locations). | 1019 |
| 3330-0015 | Auto Kwikee Step for Large Rescues. Locate under Entry door. The step shall be locked out when parking brake is activated. | 929 |
| 3330-0017 | Ceiling Handrail - Install full length ceiling handrail to ceiling of walk-in area. Offset drivers side 14 inches off the center.Van-Mor will be installing the handrail. | 322 |
| 3330-0042 | Hansen white LED body hand rails upgrade package (includes pump module if applicable) | 1517 |
| 3330-0051 | Step rear intermediate above B1. Includes handrail mounted on top of 5x5 extrusions both sides. | 816 |
| 3330-0065 | Zico access ladder. Location: [#LOC]. Includes required step lights. | 1944 |

| Item No. | Description | |
|---|---|---|
| 3330-0084 | Step pocket flop down. Locate under staircase in rub rail. | 648 |
| 3330-0100 | Step below body. Located below [#LOC]. Each location requires a minimum of (1) handrail / handhold per NFPA. | 389 |
| 3330-0116 | Dual lighted LED folding step. Location: (1) one each side of staircase for access to staircase. Each location requires a minimum of (1) handrail per NFPA. | 278 |
| 3330-0121 | Rear intermediate step with Bustin Tread insert above compartment B2. Includes hand rails mounted on both sides (or as applicable). | 818 |
| 3330-0129 | Auto Kwikee step. Step shall be wired into the door interlock system to enable the step to automatically extend when the door is opened and retract when the door is closed. Location: [#LOC]. | 929 |
| 3330-0131 | Zico retractable Step for Large Rescues. The step shall be locked out when parking brake is activated. Locate under entry door. | 2314 |
| 3330-0144 | Ceiling Handrail. E-One supplied/Van-Mor installed. - Install a 10' long ceiling handrail to ceiling of walk-in area. Van-Mor will be installing the handrail. | 322 |
| 3330-0151 | Rescue body access ladder. Zico model RL12 for increased visibility of rear outboard body mounted DOT/NFPA lighting. Includes required step lights and additional hand rail(s) if applicable. Location: [#LOC]. | 1925 |
| 3330-0165 | Handrail 24". Location [#LOC]. | 233 |
| 3330-0166 | Handrail 12". Location: Mount on rear of truck at E-One discretion. | 129 |
| 3330-0174 | Slideout platform-rollerless. Includes chrome grab handle centered on the front face of the platform (includes hand rail as applicable). The platform step to be smooth plate with gator grip painted black durabak. Located [#LOC]. | 1814 |
| 3330-0178 | Rescue body access ladder. Zico model RL12 for increased visiblity of rear outboard body mounted DOT/NFPA lighting. Includes required step lights and additional hand rail(s) if applicable. Location: [#LOC]. | 1925 |
| 3330-0188 | Hansen green LED body hand rails upgrade package (includes pump module if applicable). | 1517 |
| 3330-0207 | Hansen blue LED body hand rails upgrade package (includes pump module if applicable). | 1517 |
| 3330-0210 | Handrail 12". Install 12" handrails on the upper flat section above the speedlays for easier access to the top mount pump panel walkway. | 129 |
| 3330-0216 | Access ladder. Sure Step V2. Finish: Aluminum. Includes required step lights and additional hand rail(s) if applicable. Location: [#LOC]. | 2724 |
| 3330-0227 | Step rear intermediate above B1. Includes handrail mounted on top of 5x5 extrusions both sides. Modified GatorGrip pattern to accommodate hose deployment from walkway aft of the walkway hose bed. | 903 |
| 3330-0231 | Slide-out platform rollerless to be painted Durabak black. Includes chrome grab handle centered on the front face of the platform (includes hand rail as applicable). Located [#LOC].. | 3782 |
| 3330-0238 | Rescue body access ladder. Zico model RL15 for increased visibility of rear outboard body mounted DOT/NFPA lighting. Includes required step lights and additional hand rail(s) if applicable. Location: rear of body driver side . | 1988 |
| 3330-0239 | Four (4) Handrails 60" at rear body. Two (2) mounted either side of the B1 compartment and two (2) mounted outboard of body. | 1087 |
| 3330-0243 | Compartment (interior) mounted manually operated fold-out Seat/step/platform with Bustin inserts. Includes a mechanical hold close located in the compartment and (1) vertically mounted handrail mounted along one side of the compartment exterior. Seat/step/platform will reduce compartment interior mounted items overall width and/or depth. Locate: L1 L2 L4 R1 R2 & R4 | 1133 |
| 3330-0245 | LINE-X Package for step below body (each). | 148 |
| 3330-0253 | Dual lighted LED folding steps rear NFPA. Includes folding steps on driver side (staggered stepped as applicable with tailboard depth) for body roof access and handrail mounted on driver side upper hosebed side (as applicable). | 431 |
| 3330-0256 | Hansen amber LED body hand rails upgrade package (includes pump module if applicable). | 1517 |
| 3330-0264 | Rescue body access ladder. Zico model RL15 for increased visibility of rear outboard body mounted DOT/NFPA lighting. Includes required step lights and additional hand rail(s) if applicable. Location: [#LOC]. | 1988 |
| 3330-0271 | Handrail package - Provide (4) handrails. (2) two full available length walkway handrails inside of body located to ceiling 7 inches either side of roof centerline (1) one each side of counter top at forward edge and span from side of cabinets forward to end of walkway. | 4346 |
| 3330-0273 | A flop down step shall be provided at the rear. Step shall be mounted to the top of the tailboard and fold down behind the tailboard. Platform of the step shall be approx 9" deep x 28" wide. Step will be pinned in the up position for transit. | 1332 |
| 3330-0282 | Innovative Controls dual lighted LED folding step. Location: (1) one each side of staircase for access to staircase. Each location requires a minimum of (1) handrail per NFPA. | 322 |
| 3330-0284 | Hansen red LED body hand rails upgrade package (includes pump module if applicable). | 1517 |
| 3340-0003 | Cast Products recessed fuel fill with door. | 149 |

| Item No. | Description | |
|---|---|---|
| 3340-0015 | Diamond plate single axle wheel well. Includes bolt-on composite wheel well liners and aluminum trim fenderettes. | 1283 |
| 3340-0026 | Diamond plate overlay front body. For Stainless Steel product only. To include the entire front body panels. Do not wrap to the door opening. | 472 |
| 3340-0027 | Diamond plate corner guards for the driver and officer front compartment face. Guards to wrap around the corner and be full height of side assembly or to a max of 96". | 240 |
| 3340-0034 | The hinged door(s) of [#LOC] to have door louvers for additional ventalation. | 186 |
| 3340-0036 | Body compartment interiors to have a swirled finish. Includes pan or hinged door as applicable. | 2412 |
| 3340-0051 | Reinforce flooring of compartment [#LOC] for storage of heavy equipment. | 372 |
| 3340-0052 | Stainless steel trim on bottom edge of compartment opening of [#LOC]. | 141 |
| 3340-0059 | Recessed fuel fills for dual fuel fill application (1) each side in rear wheel wells. | 288 |
| 3340-0060 | Diamond plate corner guards for the driver and officer rear compartment face. Guards to wrap around the corner and be full height of side assembly or to a max of 96". | 271 |
| 3340-0061 | The walls of compartment [#LOC] to have additional louvers for additional ventilation. | 95 |
| 3340-0068 | Mud flaps rear black with Saulsbury logo. | 189 |
| 3340-0077 | Body compartment Interiors to have Zolatone gray finish. To include pan of hinged doors and tool compartments (as applicable). Does not include floors if they are dia plt. | 6032 |
| 3340-0078 | Body compartment Interiors and compartment mounted components (shelves trays toolboardsetc.) to have Zolatone gray finish. To include pan of hinged doors and tool compartments (as applicable). Does not include floors if they are dia plt. | 12796 |
| 3340-0088 | Smooth plate single axle wheel well painted job color. Includes bolt-on composite wheel well liners. | 1858 |
| 3340-0089 | Turtle Tile Brand [#COL] Floor Matting covering all applicable Compartment Floors Shelves and Rollout Trays. | 1976 |
| 3340-0090 | Turtle Tile Brand [#COL] Floor Matting covering all applicable Compartment Floors Shelves and Rollout Trays. | 2689 |
| 3340-0093 | Mud flaps rear black with E-ONE logo. | 188 |
| 3340-0109 | Power vent system located in [#LOC]. Includes timer and is run from shorepower inlet. | 222 |
| 3340-0119 | Speedy dry hopper. Locate [#LOC]. Includes discharge chute in compartment directly below roof top compartment with close off valve and extension hose for ground level dispensing. Capacity of speedy dry hopper is 200 lbs. | 1802 |
| 3340-0125 | Directonal light bar to be recess mounted. Located on rear area of body. | 458 |
| 3340-0132 | Diamond plate single axle wheel well. Includes fenderettes and bolt-on aluminum wheel well liners painted job color. | 2559 |
| 3340-0147 | Louver Guards. All lower body compartment louvers to have protective guard provided on exterior of compartments. Guards to prevent road spray from entering compartments. | 614 |
| 3340-0148 | Body and Cab logos (exterior large and small logos) to be mounted at final inspection. | 862 |
| 3340-0151 | Dri-Dek Brand [#COL] floor matting covering all applicable body compartment floors shelves and rollout trays. | 1892 |
| 3340-0152 | Dri-Dek brand [#COL] floor matting covering all applicable compartment floors shelves and rollout trays. | 2608 |
| 3340-0154 | Mud flaps rear black with no logo. | 188 |
| 3340-0158 | Underbody splash guard behind rear axle mounted to body. | 605 |
| 3340-0166 | Partition bolt-in vertical partition wall. Locate in [#LOC]. | 250 |
| 3340-0168 | Poly box black Qty (1) .50" thick polypropylene with carry handles. Approx size 11" W x 12" T x 24" D to be located on the lowest mounting surface of [#LOC]. | 370 |
| 3340-0174 | Stokes basket storage compartment. Locate in [#LOC] with a strap(s) to hold basket in rack. | 838 |
| 3340-0175 | Backboard storage compartment. Locate in [#LOC] with a strap to hold the boards in the rack. Rack to hold 3 boards. | 780 |
| 3340-0187 | Sign "Stay Back 150 Metres" with black reflective lettering. Locate below rear of body. | 154 |
| 3340-0200 | Removable slat flooring. Location: [#LOC] | 308 |
| 3340-0218 | Sign "Stay Back 500FT". White plate with red reflective lettering. Locate low on rear of body / body doors. | 154 |
| 3340-0220 | Body compartment Interiors to have Zolatone black finish. To include pan of hinged doors (as applicable). Does not include floors if they are dia plt. | 6032 |
| 3340-0221 | Body compartment Interiors and compartment mounted components (shelves trays toolboardsetc.) to have Zolatone black finish. To include pan of hinged doors (as applicable). Does not include floors if they are dia plt. | 12796 |
| 3340-0246 | Air bag storage for 4 bags. Appox slot sizes: (1) 3" wide x 17" high x 17" deep (1) 3" wide x 8" high x 8" deep (1) 3" wide x 16" high x 28" deep (1) 3" wide x 24" high x 22" deep and a plywood sleeve that is 6" wide x 24" high x 22" deep. Locate in L3 compartment.. | 355 |
| 3340-0258 | A deflector shield will be placed in front of the light tower or A/C system. Construction aluminum diamond plate. Deflector will be in front of the forward most component. | 1068 |
| 3340-0263 | Bolt-on 1/8" aluminum smooth plate wheel well liners. | 452 |

| Item No. | Description | |
|---|---|---|
| 3340-0264 | License plate sized number plate. Locate in license plate bracket(s). Plate to be painted job color. Lettering and/or graphics not included. | 243 |
| 3340-0267 | Stokes/backboard storage rack. Stokes rack for 8''W x 24''H x 84''L basket with backboard sleeves for (2) backboards 2.5''W x 18''H x 84''L forward of rack. Includes restraining strap for stokes and backboards on each side. Location: L1/R1 transverse rear wall. | 1087 |
| 3340-0272 | Sign "Stay Back 500FT" with black reflective lettering. Locate B1 door above D-ring. | 154 |
| 3340-0274 | Storage Pan. Locate in forward area of body running front to rear for light tower. | 850 |
| 3340-0281 | Backboard storage compartment for (2) boards. [#LOC]. Includes retaining strap for boards. | 780 |
| 3340-0283 | Horizontal ladder bracket. Location and type of ladder: [#LOC]. | 297 |
| 3340-0306 | Speedy Dry Hopper. Locate [#LOC]. Includes discharge chute in compartment directly below roof top compartment with close off valve and extension hose for ground level dispensing. Capacity of speedy hopper is 100 lbs. | 1802 |
| 3340-0309 | Sign "Keep Back 300FT". White plate with red reflective lettering. Locate on rear ladder access door. | 154 |
| 3340-0314 | Air bag module for Paratech air bags as follows: 1-KPI-1 1-KPI-3 1-KPI-5 1-KPI-12 1-KPI-17 1-KPI-22 1-KPI-32 1-KPI-35L 1-KPI-44 1-KPI-74. Locate in upper part of R1 rearward. | 1513 |
| 3340-0315 | Four (4) rope hooks will be on a slide that extends out of the compartment. Locate in R1 against rearward wall below air bag module. | 476 |
| 3340-0316 | Storage for 4 fire extinguishers. Locate in upper part of L1 rearward. | 1148 |
| 3340-0317 | Storage Pan. Locate in forward area of body. For equipment generator and light tower storage. Pan will be centered at the front of the body and the long way will run [#LOC]. | 1742 |
| 3340-0335 | Door pass thru. A Cast Products Inc. CPI sealed pass thru door shall be provided. There will be a sealed pass thru from the outside of the truck to the inside for wires. Opening size 5-1/2"T x 5-5/8"W. Locate [#LOC]. | 149 |
| 3340-0336 | Guard A/C. Guard construction to be from hand rail extrusion will be provided around the A/C unit. | 886 |
| 3340-0353 | Body compartment Interiors and compartment mounted components (shelves trays toolboardsetc.) to have Zolatone gray finish. To include pan of hinged doors (as applicable). | 6032 |
| 3340-0358 | Backboard storage sleeve for (1) board. 4"H x 20"W x 76"L. Includes (2) retaining straps (1) each side for boards. Location: Horizontally mounted through L3/B1/R3. | 780 |
| 3340-0374 | Sign "Stay Back 300FT" with black reflective lettering. Locate below rear of body. | 154 |
| 3340-0376 | Diamond plate single axle wheel well. Includes fenderettes and bolt-on aluminum wheel well liners sanded finish. | 2314 |
| 3340-0386 | Mateflex brand [#COL] floor matting covering all applicable compartment floors shelves and roll-out trays. | 1976 |
| 3340-0388 | Brushed stainless steel rubrails for the sides of the body below the lower side compartments. | 862 |
| 3340-0389 | Stainless steel rear fender panels painted job color. (Recommended for FRP paint process compatibility!) Includes bolt-on stainless steel inner wheel well liners (not painted) and polished stainless steel outer fenderettes. | 1858 |
| 3340-0392 | Underbody full width mudflap behind rear axle (as applicable) mounted to body. | 713 |
| 3340-0396 | A deflector shield will be placed in front of the light tower or A/C system. Deflector will be in front of the forward most component. Deflector will be painted [#COL]. | 1330 |
| 3340-0400 | Backboard storage compartment for (2) boards in transverse. Location: [#LOC]. Includes retaining straps on both sides for boards. | 780 |
| 3340-0405 | Sign "STAY BACK 500 FEET" with black reflective lettering. Locate below rear of body. | 154 |
| 3340-0406 | Sign "Stay Back 150 Metres" with black reflective lettering. Locate below rear of body. | 154 |
| 3340-0457 | Zico vertical QUIC-MOUNT pike pole holder locate on officer's side of catwalk. Holders shall accommodate 10 foot pike poles. There shall be a pin added to the U-shaped Zico bracket to secure the poles. | 335 |
| 3340-0458 | Adjustable ladder brackets. Mount in adjustable tracks on [#LOC] in the catwalk. | 665 |
| 3340-0476 | Stainless steel tandem axle rear fender panels painted job color. Includes bolt-on stainless steel wheel well liners (not painted) and polished stainless steel outer fenderettes. | 2438 |
| 3340-0490 | Sign "Stay Back 15 Meters" with black reflective lettering. Locate below rear of body. | 154 |
| 3340-0493 | Sign "Keep Back 150M". White plate with red reflective lettering. Locate on rear ladder access doors. | 154 |
| 3340-0500 | [#LOC] compartment walls are to be non-louvered. | 266 |
| 3340-0505 | Storage for air bags. Locate in R1 above the crosslay on the rear wall and against lower forward wall in R1. Storage will hold a Sava 223 Ton City Heavy Rescue Kit 7 Lift Bag Set. | 1513 |
| 3340-0506 | Stokes basket mounting brackets on top of body. Locate in the catwalk offset to the drivers side. Bracket will include a set of straps and a piece of poly on catwalk floor. | 549 |
| 3340-0507 | Backboard storage compartment. Locate in driver's side roof compartment on the forward interior corner. Rack to hold 3 boards. | 780 |
| 3340-0508 | Utility Air Compressor Atlas Copco LT3-20 3 HP 7.8 CFM @290 PSIG. Located in dunnage are on the driver's side. | 7416 |

| Item No. | Description | |
|---|---|---|
| 3340-0537 | Stokes basket mounting brackets on top of body. Locate in the catwalk offset to the drivers side. Bracket will be lined with poly material and include straps. | 549 |
| 3340-0547 | A chrome handle will be attached to each roof compartment lid centered front to rear. | 130 |
| 3340-0548 | Zico Walkaway bracket with standard spring clip brackets will be located as follows: two (2) on the forward toolboard forward facing and two (2) on the rearward toolboard rearward facing in L6. | 160 |
| 3340-0549 | Flexible 2.5" conduit with connectors. Location: R3 rearward below roll-out work surface to below the desk centered in the floor. | 709 |
| 3340-0566 | Front panel of the body shall be covered by 16 gauge brushed finish stainless steel. The vertical panels at the inner rear entrance area shall be covered with brushed 16 gauge stainless steel. 16 gauge stainless steel overlays shall be placed between the compartment door hinges on the exterior left and right sides of the body. Non-skid aluminum treadplate protection on the entire roof of the command body area with built-in or add on upper side drip rails. | 3115 |
| 3340-0576 | Mateflex brand [#COL] floor matting covering all applicable compartment floors shelves and roll-out trays. | 1196 |
| 3340-0592 | Body walk-in Interiors to have Zolatone gray finish. To include extrusions smooth plate surfaces and storage cabinets interior and exterior (as applicable). Does not include floors if they are dia plt. | 4114 |
| 3340-0594 | Staircase storage will be as follows: B1 - open B2 - open B3 - Stokes basket B4 - (1) 24' 2 section ladder (1) 14' roof ladder (1) 10' attic ladder and (2) pike poles. All floors to have Nylatron. | 2233 |
| 3340-0596 | Backboard storage compartment. Locate in R2 upper with a black cargo net to hold the boards in the rack. Rack to hold 3 boards. | 903 |
| 3340-0601 | Backboard storage compartment for (2) boards in transverse. Location: [#LOC]. Includes retaining straps on both sides for boards. | 780 |
| 3340-0614 | [#COL] edge trim for floor mounted Turtle Tile matting. Locate on door opening side only. Requires seperate floor matting option. | 431 |
| 3340-0621 | Air bag storage:(6) bags. Slot sizes: approximately 24" wide x 5" high x 24" deep. located R3 on rear portion of SlideMaster tray. Includes tray on top with 2 inch lip all around. | 1195 |
| 3340-0622 | Air bag storage for 4 bags. Appox slot sizes: (4) 24" wide x 4" high x 31" deep. Locate in L3 compartment. | 1140 |
| 3340-0643 | Stainless steel trim for lower edge of rear mudflap (PR). The trim shall be 2" in height and go full width of the mudflap. The material shall be "polished" stainless steel and it will be mounted to the lower edge of the rear (back side) of the mudflaps. | 359 |
| 3340-0652 | Stainless steel trim for lower edge of front mudflap (PR). The trim shall be 2" in height and go full width of the mudflap. The material shall be "polished" stainless steel and it will be mounted to the lower edge of the rear (back side) of the mudflaps. | 359 |
| 3340-0662 | Recessed fuel fill with flat latching stainless steel door. Door style to match SCBA doors. | 313 |
| 3340-0672 | Body and Cab Tags in French to replace standard English E-One supplied Tags. | 1741 |
| 3340-0694 | Spool qty (4) to accommodate plastic or paper roll storage. Mounting bar to fit 48" long x 12" Dia. roll of sheet plastic. Includes "U" brackets & quick release pins on each end. Loc: [#LOC]. Locate (2) spools up high to rear (2) in L3 and (2) R3. | 809 |
| 3340-0695 | Soda ash hopper. Locate [#LOC]. Includes discharge chute in compartment directly below roof top compartment with close off valve and extension hose for ground level dispensing. The hopper shall be constructed of stainless steel holding capacity shall be 200 lbs. | 2427 |
| 3340-0697 | Power vent system located in [#LOC]. Wired through receptacle in compartment. | 223 |
| 3340-0704 | (2) Two access panels to be provided. (1) One thru B1 interior forward bulkhead to access dealer installed DOT bottle valves and (1) One roof access for installation and service of dealer installed DOT bottles installed in E-1 provided rack. | 1653 |
| 3340-0713 | Diamond plate deflector shield for Light Tower. Deflector to be mounted on driver side compartment top at front of body. See photos on file. | 459 |
| 3340-0714 | Bolt-in floor [#LOC]. Floor is in addition to the existing DP floor. Floor to have 2" raised forward area (tapered towards rear for securing cribbing) and run full length front to rear. | 253 |
| 3340-0716 | Bolt-in SS floor taper [#LOC]. Floor taper is in addition to the existing stainless steel floor. Floor to have 1.5" raised outer area (tapered towards back wall for securing cribbing) and run full length side to side. | 253 |
| 3340-0719 | One (1) horizontal air bag module to contain six (6) customer supplied 24" square air bags. Module to be .125" aluminum sheet with six (6) slots and installed on upper right side slide out tray in compartment R3. Half circle cut outs shall be provided on the outer edge to assist in grabbing the bags. Layout shall be in a one (1) wide & six (6) tall configuration . One (1) strap will be installed vertically across the openings to keep items securely stowed in side | 1195 |
| 3340-0726 | Nylon black cargo net for interior compartment opening of compartment [#LOC]. Cargo net to have custom designed one-piece bar assembly and one step Velcro attachment process with footman loops shall be used opposite the bar end. | 346 |

| Item No. | Description | |
|---|---|---|
| 3340-0730 | Smooth plate corner guards for the driver and officer front and rear compartment faces. Guards to wrap around the corner and be full height of side assembly or to a max of 96". Corner guards to be painted black durabak. | 1030 |
| 3340-0733 | Bolt-in lower floor R1. Floor is in addition to the existing DP floor. Floor to have 2" raised forward area (tapered towards rear for securing cribbing) and run full length front to rear. | 253 |
| 3340-0734 | Storage tunnel for (1) backboard. Locate tunnel in L2/R2 on ceiling rear of L2 partition offset to rearward wall. Tunnel shall be approximately 72" long (side to side) X 19" wide (front to rear) to hang approximately 6.5" below the roll up door with strap(s) to stow board in place. | 829 |
| 3340-0740 | Divider shroud for cab tilt pump bolt in R1. | 210 |
| 3340-0747 | Compartment heater as high as possible on forward wall. Includes switch on driver overhead. Location: [#LOC]. | 1374 |
| 3340-0748 | Horizontal air bag module for five (5) customer furnished air bags. Bags will be Paratech Maxiforce brand and each bag will store with two (2) identical pieces of 3/4" plywood. Locate under backboard module in compartment L2. See specifications for details. | 1943 |
| 3340-0755 | Upper body side panels driver & officer side to be flush. | 1691 |
| 3340-0756 | Smooth plate deflector shield for Carefree automatic awning. Deflector to be located forward of awning. Location: [#LOC] of body. To be painted job color. | 246 |
| 3340-0758 | Speedy dry hopper. Locate [#LOC]. Includes discharge chute in compartment directly below roof top compartment with close off valve and extension hose for ground level dispensing. Capacity of speedy dry hopper is 180 lbs for a shorter upper body (less than 19"). | 1802 |
| 3340-0759 | Backboard storage compartment for (2) boards in transverse side by side. Location: [#LOC]. Includes retaining straps on both sides for boards. | 780 |
| 3340-0764 | Engle MR040 AC/DC fridge-freezer with durable corrosion-resistant ABS case. Location: tray mounted in compartment R2. Requires 12 volt and 120 volt power sources in selected location. | 2109 |
| 3340-0765 | Upper body panels driver side officer side and rear body to be seamless and flush. | 2039 |
| 3340-0766 | Rear body panels to be seamless and flush. | 502 |
| 3340-0767 | Dividers bolt in Qty (2) for transverse compartment. Location between L3/R3. One (1) divider to be located 26 inches deep from L3 and one 28 inches deep R3 door opening so as to generate a compartment located over chassis centerline. | 1091 |
| 3340-0768 | Horizontal air bag module for five (5) customer furnished air bags. Location: R3 rearward. Bags will be Paratech. Openings to be 2 inch wide. (1) 16 inch X 44 inch (4) 26 inch X 26 inch. | 1943 |
| 3340-0769 | Ladder tunnel. Tunnel to be a compact design and approximately 12" Tall X full width of B1 X approx 14 feet deep. Tunnel sized to stow (1) 24` 2-section ladder (1) 14` roof ladder (1) 10` folding attic ladder (6) 12` pike poles. Tunnel option will reduce the compartment area of the lower body. Locate: B1 high as possible. | 3605 |
| 3340-0778 | Wheel well liner extensions for inboard side of rear wheel well liners (PR). | 379 |
| 3340-0780 | The officer side upper body roof top compartment rear wall to have welded filler panel to be seamless and flush with supporting extrusions. | 259 |
| 3340-0781 | Storage tube 14in x 14in square x transverse (pr). locate to rear in compartment L3/R3 and stack vertically. | 1258 |
| 3340-0783 | The upper body side panels driver & officer side to have welded filler panels to be flush with supporting extrusions. Includes forward body module. | 1691 |
| 3340-0784 | Removable brushed stainless steel panel shall be provided that includes from top to bottom: Chassis air inlet Battery charge indicator Yellow 30 AMP shore line auto-eject receptacle and at the bottom of the panel a dedicated Red 30 AMP shore line auto-eject receptacle for roof top air conditioner. Locate: rear of body on driver side. | 381 |
| 3340-0790 | Swing arm bracket with smooth plate box for TAL65 lightbar mounted on square extrusion. Swing arm to be mounted at rear of hosebed with pivot tower and (2) locking towers to be provided. | 814 |
| 3340-0794 | B2 and B3 storage: B2 storage shall accommodate (2) 6` pike poles (2) 8` pike poles and (1) Little Giant 22 ladder. B3 storage shall accommodate (1) Stokes basket (2) backboards (2) 12`pike poles and (1) attic ladder. Compartments shall be designed to secure stowed items with aluminum construction dividers tubing and extrusions. Stops and securing devices shall be utilized as required to prevent items from shifting during transport. | 1190 |
| 3340-0803 | The driver & officer side upper body side panels over L1/R1 to be a flush smooth plate finish. | 396 |
| 3340-0804 | Zico Quic-Index Multiple Bracket Holder. Without brackets. located in the rear walkin body on top of the counter next to the rear entry door. | 577 |
| 3340-0807 | Speedy Dry Hopper. Locate in roof compartment above R2. Includes discharge thru bottom of compartment R3 along forward compartment wall with valve for ground level dispensing. Capacity of speedy hopper is 100 lbs. | 1552 |
| 3340-0814 | (2) Wheel well storage compartments with vertically hinged stainless steel painted doors and latches. Wired into compartment door ajar circuit. | 1105 |

| Item No. | Description | |
|---|---|---|
| 3340-0815 | Horizontal air bag module for nine (9) customer furnished Paratech air bags. Location: L1 rearward. Vertical storage for two (2) large Paratech bags inside the walk-in rescue body. See specification for details. | 1943 |
| 3340-0816 | Bolt-in two piece cribbing storage modules constructed of .1875 smooth plate aluminum installed in compartments L3 & R3. Modules to hold (8) 2 x 6 (8) 6 x6 (40) 4 x 4 and (3) divided areas for miscellaneous items. Spaced apart for step chock storage. | 1045 |
| 3340-0817 | Vertical extension cord modules for customer furnished cords. Location: L1 and R1 offset forward. Each constructed of smooth plate aluminum 18.5" H x 19" W x 22" D with (3) vertical dividers on 3" centers. | 473 |
| 3340-0822 | Air bag storage:(3) bags. Slot sizes: approximately 40" wide x 6" high x 24" deep. located L3 on rear portion of SlideMaster tray. Includes tray on top with 2 inch lip all around. | 1195 |
| 3340-0826 | Air bag storage for (11) bags. Horizontal storage to accommodate Paratech brand bags. Includes vertical restraint straps. The air bag sizes are as follows: (1) 15x21 (1) 15x42 (2) 20x20 (2) 15x15 (2) 24x24 (3) 37x37. Locate in R3. | 2214 |
| 3340-0839 | Stokes / backboard tunnel. A storage tunnel with approx size of 10 inches tall X 44 inches wide X 90 inches long shall accommodate (1) stokes basket (2) backboards and (1) scoop stretcher. Option shall reduce the transverse area of body compartment L2/R2. Location: B1 ceiling mounted on center. | 1942 |
| 3340-0850 | Windows body side sliding. Locate over L1 | 311 |
| 3340-0851 | A fixed window with an approx size of 12 x 18 inches shall be provided in the lower section of the body entry door. The window shall be oriented vertically and located below the door latch so as to provide a visual reference of the entry and exit step area. LOC: Body entry door. | 653 |
| 3340-0852 | Stokes basket storage compartment with a strap(s) to hold basket in rack. "Ferno" brand. Locate: on floor in walkin body with opening facing rear body entry door on driver side. Compartment to be oriented on its side and as far aft as posiable. | 954 |
| 3340-0853 | Storage / pigeon hole: 18 in X 18 in square X 26 in deep. For bunker gear. Locate inside walkin body. | 225 |
| 3340-0854 | Cargo net cover for pigeon storage opening. Cargo net to be Black 2 in x 2 in squares. Use permanent fastners along top edge and snaps in other locations. | 135 |
| 3340-0856 | Body roof recess storage to accommodate generator and service access all around unit. Approx sixe 42 in. front to rear X wide as possible X deep as possible. Locate in forward area of body roof. | 1371 |
| 3340-0857 | Divider for transverse compartment bolt in between L1/R1. Locate 22 in. deep from inside of L1 door. Finish is sanded aluminum unless otherwise specified. | 546 |
| 3340-0858 | Divider for transverse compartment bolt in between L2/R2. Located at chassis centerline and forward of partition. Finish is sanded aluminum unless otherwise specified. | 546 |
| 3340-0860 | White poly boxs Qty (4) to be 3/8" thick polypropylene with carry handles provided. Located in R1 shall be (4) Four totes with dimension of approx 12 in wide x 25 in deep x 16 in tall. | 1749 |
| 3340-0861 | Reinforce flooring of compartment LTC and RTC for storage of heavy equipment. | 570 |
| 3340-0862 | Stainless steel trim on bottom edge of compartment opening of [#LOC]. Includes full height of exterior extrusion. | 176 |
| 3340-0864 | Diamond plate single axle wheel well. Includes bolt-on composite wheel well liners and sanded aluminum trim fenderettes. | 1040 |
| 3340-0870 | Stainless steel trim on bottom edge and covering entire surface of extrusion below compartment opening of [#LOC]. | 212 |
| 3340-0871 | Air bag rack for (10) air bags. Rack only (does not include air bags). Brand: TNT. Vertical storage for bags as follows left to right: (1) 32" x 32" (2) 28" x 28" (6) 25" x 25" (1) 16" x 16". Locate in R2. | 1776 |
| 3340-0872 | Provision for Revolve Air fill station to be installed after delivery. Includes blowout cutout mounting preperation and cover plate. Location: L4. | 612 |
| 3340-0873 | Compartment for Stokes storage. Basket approx size 25 inches tall X 8 inches wide X 86 inches long. Compartment to include: hinged top access lid thumb latches and door hold open device. Compartment shall accommodate (1) basket. Brand and model: Traverse rescue "StratLoad" Advantage Basket Stretcher Part No. 11-0125A: Compartment to be aluminum diamond plate. Locate: Roof top walkway attached to front of forward roof top storage box on officer side of body. | 2243 |
| 3340-0874 | Reinforced hinged .188" embossed diamond plate lid for dunnage pan. Includes two (2) D-Ring latches stainless steel hinge along forward edge and gas shock hold open. Lid to be reinforced with welded on structure on underside to allow for lid to be a walking surface. | 774 |
| 3340-0880 | Brushed stainless steel scuff plates for all body handrails. | 538 |
| 3340-0894 | Smooth plate single axle wheel well painted job color. Includes bolt-on composite wheel well liners and bolt-on polished alum fenderettes. Wheel well plates to be flush mounted. | 3494 |
| 3340-0904 | Logo rear body to be mounted at final inspection. | 279 |

| Item No. | Description | |
|---|---|---|
| 3340-0913 | Divider for transverse compartment bolt in between L1/R1. Locate: R1 26 in deep from inside of door. Finish is sanded aluminum unless otherwise specified. | 546 |
| 3340-0914 | Divider for transverse compartment bolt in between L2/R2. Locate: R2 26 in deep from inside of door. Finish is sanded aluminum unless otherwise specified. | 546 |
| 3340-0923 | Speedy Dry Hopper. Locate in roof compartment above R3. Includes discharge thru bottom of compartment R4 along forward compartment wall with valve for ground level dispensing. Capacity of speedy hopper is 100 lbs. | 1552 |
| 3340-0924 | Aluminum angle 2"x2" bolt on light guard to protect ROM light fixture and roll-up door track from damage for L4 rearward light only. (1) 18" piece at top and (1) 18" piece at the bottom bolted to the rear wall. | 129 |
| 3340-0931 | B2 and B3 storage for (1) Stokes basket (1) backboard (3) pike poles (1) 10' FL-10 with feet Alco-Lite ladder. B3 storage for long handle tools only. | 1190 |
| 3340-0936 | Air bag module for Paratech air bags as follows: 1-KPI-1 1-KPI-3 1-KPI-5 1-KPI-12 1-KPI-17 1-KPI-22 1-KPI-32 1-KPI-35L. Locate floor mounted in lower R3. | 1513 |
| 3340-0938 | Provide access with covers on forward wall of compartment R3 to access to upper KLAMP-IT hardware for DOT storage bottles located in R2. | 209 |
| 3340-0939 | Tool box CTECH brand 4 drawer compartment toolbox. Includes Cal Gray drawer face finish with two (1) 8" drawer below and three (3) 3" drawers above. Toolbox dimensions to fit in an opening 36" W X 18" H X 24" deep. Requires a fixed shelf mounted above toolbox to enclose top drawer and create opening height added separately. Locate: forward and below extended floor in L2. | 2254 |
| 3340-0940 | Storage Pan. Pan to accommodate generator and light tower equipment. Approx size 46 inches wide and depth to match upperbody height X 216 in. long. Locate on top of rear body roof and span from front of body to rear body. | 3218 |
| 3340-0942 | Speedy Dry Hopper location: [#LOC]. Mounted on a floor mounted 500# roll-out tray. Tray to have notch on front wall for Speedy Dry Hopper valve to hold #150 pounds. | 2253 |
| 3340-0944 | Access thru body roof to accommodate DOT / ASME bottle valve access. Includes: Thumb latch type access diamond plate cover. Location: Above B1 in body roof pan aft side wall centered forward of bottle valve area. | 379 |
| 3340-0945 | Storage Pan. For equipment generator and light tower storage. Sized to accommodate equipment option. Locate: over rear axle area. | 1742 |
| 3340-0953 | Rub rail assembly constructed of 3" x 2" Black U.H.M.W. plastic. Bolted to the lower exterior perimeter edge of the apparatus body. Rub rail shall be mitered 45 degrees at leading and trailing end and notched for marker and warning lights clearance (where applicable). | 1504 |
| 3340-0954 | Stainless steel rear fender panels painted job color. (Recommended for FRP paint process compatibility!) Includes bolt-on stainless steel inner wheel well liners (not painted) and rubber outer fenderettes. | 1585 |
| 3340-0958 | Backboard storage sleeve for (2) boards individually stored one on top of the other. Each area to be 3"W x 17"H x 72"L. Includes (1) retaining strap on the driver side. Location: Vertically mounted in L1 and into R1 (no access this side) inboard of the vertical exhaust. | 780 |
| 3340-0966 | Hosebed to accommodate 500 feet of 5 inch LDH. Locate: Roof top walkway on driver side in front of roof top compartments and span full length. Design to accommodate passing over roof access to water tank in body. Includes: hosebed pan side wall slatts hinged top access cover with handels and latches to load hose and stand on top of lid if required & vinyl cover at rear of body. (as applicable). | 4515 |
| 3340-0968 | Tunnel cribbing. A storage tunnel approx size 8 inches tall X 23 inches wide X 72 inches deep shall be provided. Includes: Lift up rear access door thumb style latch hold open device and shall be wired to door ajar. Door finish shall match rear of body. Locate: Below roof top compartment on driver side of body. | 1942 |
| 3340-1000 | Cast Products FG4102-1-250-N (hinge right) recessed fuel fill with door. Recessed fuel fill driver side wheel well. | 149 |
| 3340-1002 | Upper body side panels driver & officer side to be flush. Option for extended body height modification and includes forward body module (if applicable) . | 2783 |
| 3340-1004 | Stokes storage compartment. Compartment shall include a top load hinged access door with D-ring latches and moon spring door hold open device. Compartment shall be 9 in. wide X full width of body and full height of upper body. Locate: eMAX module pan toward aft bulkhead with vertical access to rear body catwalk area. | 1638 |
| 3340-1005 | Storage sleves. A open faced storage sleve unit shall be provided that is 25 in. wide X 26 in. deep X 18 in tall. Unit includes (1) shelf centered horizontally inside. Construction is 3/16 smooth aluminum. Locate: in L1 up high and forward in compartment. | 355 |

| Item No. | Description | |
|---|---|---|
| 3340-1006 | Hosebed to accommodate 800 feet of 3 inch DJ hose. Locate: Roof top walkway on driver side in front of roof top compartments and span full length. Design to accommodate passing over roof access to water tank in body. Includes: hosebed side wall slats hinged top access cover with handles and latches to load hose and stand on top of lid if required & a cargo net cover shall be provided to access the hose bed area from the rear of body. Cargo net color: Black | 4515 |
| 3340-1014 | Hang rod stainless steel bolt in. Qty (1). Design to be similar to grabrail. configuration to accommodate Sterns life jackets stowed on hangers. Hang rod to be approx half compartment length. Locate: R3 centered on ceiling against aft wall and to run forward. | 426 |
| 3340-1015 | Sign "STAY BACK 500 FEET" with black reflective lettering. Sign to be a vertically split design with "STAY BACK" on the left plat side plate and "500 FEET" on the right side plate. Locate: B1 door centered. | 307 |
| 3340-1016 | Access panels pair. Bolt in access panels for body compartment back wall to provide service access located over chassis centerline. Construction to be consistant with compartment interior. Locate: L2/R2 26 inches deep from body door opening. | 1091 |
| 3340-1024 | Provision for roof access to ASME/DOT storage bottles located in B2 and B4. Includes: removabe roof access cover plates. Location: Rear body roof over B2 and B4. | 852 |
| 3340-1028 | Divider for transverse compartment bolt in between L3/R3. Located at chassis centerline. Finish is sanded aluminum unless otherwise specified. | 546 |
| 3340-1029 | Cover for ASME / DOT storage bottles. A bolt on diamond plate cover shall be provided for the ASME / DOT storage bottles. Includes: Thumb latch type fast access to bottle valve. Location: eMAX dunnage pan. | 847 |
| 3340-1031 | Turtle tile floor matting on floor of walk-in body. Matting to be secured to the floor with stainless steel machine screws and locktite. NYPD only. | 443 |
| 3340-1040 | Body compartment Interiors and compartment mounted components (shelves trays toolboardsetc.) to have gray Scorpion polyurethane coating. To include pan of hinged doors and tool compartments (as applicable). Does not include floors if they are dia plt. | 14853 |
| 3340-1045 | Speedy Dry Hopper. Locate in roof compartment above forwardmost driver side compartment. Includes discharge through bottom of compartment along forward wall with valve for ground level dispensing. Pipe to be fully boxed in with a vertical partition running the full height and depth of the comaprtment and completly enclosed at the front as wide as necessary so the pipe is not visiable. Capacity of speedy hopper is 100 lbs. | 1797 |
| 3340-1046 | There shall be 12 gauge stainless steel smooth plate false wall bolted-in 16" in from outside of body. Locate in one (1) each L2 & R2 compartments. | 530 |
| 3340-1049 | Stainless Steel corner guards for the driver and officer rear compartment face. Guards to wrap around the corner and be full height of side assembly. | 312 |
| 3340-1050 | Bottom hinged flat latching stainless steel doors with lift and turn latches shall be provided on each side the forward body wheel well panels for access to the side mounted portable winch receiver assembly and electrical connection. The rear side interior walls of the compartments adjacent to the side mounted receivers shall have access doors for connection purposes. | 459 |
| 3340-1055 | A tag stating "Top off DEF tank when fueling main tank" shall be permanently affixed to the vehicle near the fuel fill(s). | 76 |
| 3340-1058 | Doors access to wheel well receiver (pair). Access doors shall be provided on each side of the rear body wheel well panels to access to the side mounted portable winch receiver assembly and electrical connection (if applicable). The rear side interior walls of the compartments adjacent to the side mounted receivers shall have access doors for pin connection access. Door construction shall be consistant with the body design and match panels they are located in. | 459 |
| 3340-1060 | Pan for pole light to be recessed in roof. Construction to be consistant with roof construction and includes drain. Pan shall be sized by engineering to best accommodate pole lighting that is designated in same location. Locate: [#LOC]. | 868 |
| 3340-1064 | LINE-X Package: Body compartment Interiors and compartment mounted components (shelves trays toolboardsetc.) to have LINE-X finish. To include pan of hinged doors and tool compartments (as applicable). Includes diamond plate floors and E-ONE style wheel well SCBA compartments if applicable. Package does not include roof top compartment interior. | 19194 |
| 3340-1067 | LINE-X Package: Body compartment Interiors shall have LINE-X finish. Package does not include roof top compartment interior. | 9048 |
| 3340-1077 | Stop bracket. A 1 inch aluminum angle to be located along body compartment floor edge close to door opening. Locate: L3. | 47 |
| 3340-1078 | Stop bracket. A 1 inch aluminum angle to be located along body compartment floor edge close to door opening and between aft wall and 2nd partition. Locate: R4. | 47 |
| 3340-1082 | Speedy Dry Hopper location: R2 floor. Mounted on a floor mounted 500# roll-out tray. Tray to have notch on front wall for Speedy Dry Hopper valve. Capacity #145 pounds. | 2847 |

| Item No. | Description | |
|---|---|---|
| 3340-1083 | Provision for reels to be dealer installed after delivery. Provision includes: Four (4) adjustable tracks welded to compartment roof structure and a mounting plate bolted into place to later be removable and fitted with reels after delivery. Mounting plate to be approximately 38 in. x 50 in. Locate: L1/R1 ceiling centered. | 546 |
| 3340-1087 | Stokes / Step Ladder module. A storage module with approx size of 15" tall x 25.25" wide x 90" long shall accommodate (1) stokes basket and (1) customer supplied 7' tall folding step ladder. Construction shall be smooth aluminum sheet metal with a sanded finish unless otherwise specified. Poly shall be utilized on the floor of the Stokes and Ladder tunnel. Location: B1 ceiling mounted offset to right side. Nylon strap assemblies shall be provided across the openings. | 1681 |
| 3340-1090 | Diamond plate single axle wheel well. Includes bolt-on aluminum wheel well liners sanded finish and bolt-on polished aluminum fenderettes. | 1726 |
| 3340-1097 | Vertical air bag module for four (4) customer furnished air bags. Bags will be Vetter brand. Nylon buckle strap assembly shall be provided across the openings. Locate on the upper rear wall of compartment L2. See specifications for details. | 1480 |
| 3340-1108 | Provision for MAKO fill station to be installed. Includes blowout cutout mounting preperation. Fill station mounting specs to be provided to E-1 by dealer prior to engineering release. Location: L4. | 612 |
| 3340-1111 | Brackets to store one (1) 14' extension ladder. Construction is aluminum. Finish is sanded aluminum. Locate: in catwalk on driver side. | 814 |
| 3340-1119 | Rivet in place stainless steel trim on bottom edge of compartment opening. Option quantity is each. Option does not include stainless steel trim. | 57 |
| 3340-1121 | Storage sleeve. A open faced storage sleeve unit shall be provided that is 6 W X 40 T X 40 D. Includes: nylon strap with plastic buckle across opening at center. Construction is 3/16 aluminum diamond plate. Locate: inside walkin module against aft wall on driver side with opening facing module entery door. | 355 |
| 3340-1122 | Conduit flexible 2.5" conduit with connectors. Location: Route from aft area of cab map box to body module electronics cabine above refrigerator. Includes (4) four pull wires labeled 1 thru 4. Renton Rescue. | 847 |
| 3340-1123 | Underbody full width mudflap mounted to body. Includes white reflective "STAY BACK 300 FEET" lettering. Locate at rear of body ahead of staircase. Bottom of flap to be approx 12" off ground. | 866 |
| 3340-1130 | Provision for SpaceSaver M2792M two bottle mobile fill station to be installed after delivery. Includes blowout cutout mounting preperation and cover plate. Location: L4. | 612 |
| 3340-1133 | Cargo net. Black Nylon cargo net with 2x2 openings shall be provided inside body compartment for area below transverse style extended floor [#LOC]. Cargo net to be permanently fastened to bottom of transverse compartment style extended floor and secured in place at bottom and sides with twist-locks snaps and Velcro straps as deemed required by E-1 engineering to adequately secure cargo in place. | 766 |
| 3340-1144 | Deflector for roof mounted A/C unit. A 3 sided smooth aluminum deflector shall be positioned in front of and around a pair of roof mounted A/C systems on the body roof. The deflector shall be slotted on the sides to provide unobstructed ventilation. Finish: Paint FLNA 4006 White. | 1284 |
| 3340-1149 | Stainless Steel corner guard for the officer rear 3x3 to protect the paint from the pike poles.. Guard to wrap around the 3x3. | 157 |
| 3340-1153 | Binder box. A smooth aluminum box with a sealed water resistant front drop down hinged access door shall be provided. Includes: Shock resistant lined interior finish water resistent design thumb style door latching door support and interior light. The box interior shall be lined with a thin profile shock resistant product to provide minimal proctection for items stored inside. Approx dimensions: 20 in. wide X 16 in. tall X 25 in. deep. Finish: Sanded aluminum. Locate:R2 below extended floor. | 1586 |
| 3340-1154 | Provision for SpaceSaver M2794M Quad 4 bottle fill station. Includes blowout cutout and mounting. Location: R1. | 568 |
| 3340-1155 | Storage / pigeon hole: 18 in wide X 15 in tall X 25 in deep interior dimensions. Locate: L3. | 225 |
| 3340-1156 | Storage / pigeon hole REMOVABLE: 18 wide X 18 in tall X 19 in deep for bunker gear. Locate: L1 compartment floor. | 225 |
| 3340-1157 | Storage / pigeon hole: 18 in wide X 15 in tall X 25 in deep interior dimensions. Locate: R3. | 225 |
| 3340-1158 | Divider for transverse compartment bolt in between L2/R2. Locate: R2 26 inches deep. Finish is sanded aluminum unless otherwise specified. | 546 |
| 3340-1160 | Cargo net cover for (6) six pigeon storage openings. Cargo net to be Black 2 in x 2 in squares. Use Velcro along top and sides and snaps along the bottom. Locate: L3 | 782 |
| 3340-1161 | Stokes storage compartment. Compartment shall include a top load hinged access door with D-ring latches and moon spring door hold open device. Compartment shall be sized to best accommodate stokes basket. Locate: Upper body catwalk against face of roof top storage box on driver side and forward bulkhead. | 1638 |

| Item No. | Description | |
|---|---|---|
| 3340-1162 | Cargo net cover for (6) six pigeon storage openings. Cargo net to be Black 2 in x 2 in squares. Use Velcro along top and sides and snaps along the bottom. Locate: R3 | 782 |
| 3340-1163 | Compartment heater. Includes switch on driver overhead. Location: [#LOC]. | 1374 |
| 3340-1172 | Poly box with approx size 12" W x 12" H x 23" D to be located on the rearward adjustable shelf in L2. | 370 |
| 3340-1173 | Horizontal air bag module for five (5) customer furnished air bags. Location: R3. Each storage area to be 2" high. The bottom storage are to be full width and the uppers to be half width. | 1943 |
| 3340-1176 | Recessed fuel fill on MAN chassis. Locate: officer side body module forward of mudule entry door. | 284 |
| 3340-1178 | Sign plate smooth 25 in wide x 30 in long front to rear. Locate: top of body roof officer side forward. Color: White FLNA 4006 | 583 |
| 3340-1185 | Cabinet. CTECH brand 2 drawer type file cabinet. Use for SO140170 Sarasota only. A vertical 2 drawer type file cabine shall be provided by E- and installed by VanMor. Cabinet size: 24.75" W X 28" H X 18" D. Includes: Motion latch radius corners on side panels clear anodized frame & 12" drawers. Color:Cal Gray. Locate: Cabinet to be located and installed by VanMor per E-1 drawing. | 1140 |
| 3340-1187 | Doors access to tandem wheel well receiver (set). Access shall be provided for the side receiver assembly and electrical connection (if applicable) thru a hinged door located in front of the receiver centered in the tandem wheel well. Construction shall be consistent with the body design and match panels where located. | 565 |
| 3340-1189 | Nylatron bolt-on overlay for compartment floor (full width/full depth). Includes 45 degree beveled edge to outside and .187" smooth plate aluminum beneath Nylatron floor with fasteners countersunk. Location: [#LOC]. | 608 |
| 3340-1191 | Storage box with doors over forward body pan. Diamond plate storage enclosure on top of body. Construction shall be consistent with the upper body design. Includes: A split pan diamond plate lift-up door hinged to the outboard (left and right) of the box. The doors shall utilize D-ring handles with (2) point latching and be wired to the door ajar circuit. LED lighting shall be provided for each. The lights shall illuminate when the compartment lid is in the open position. There shall be gas spring hold open device(s)on each door. The rear of the doors shall include pull down straps to assist closing the doors by. | 3170 |
| 3340-1192 | Tunnel ladders & cribbing. Tunnel to be compact design and split into two levels. Tunnel upper level to accommodate (1) one Duo Safety 775-A 14` roof ladder and (1) one Duo Safety 585-A 10' folding ladder. Tunnel lower level to accommodate 4X4X12 foot cribbing. Option shall reduce the compartment area in L2/R2. Option includes angles and stops to provide as guides for ease of equipment access and security. Locate: B3. | 2703 |
| 3340-1195 | Cargo net for opening of storage cabinet located inside walk in rescue body side walls. Size to best accommodate cabinet openings. Cargo net to be Black 2 in x 2 in squares. Use permanent fastners along bottom edge and snaps in other locations. Qty each. | 322 |
| 3340-1196 | Divider for transverse compartment bolt in vertical divider between L1/R1. Located at chassis centerline. Finish is sanded aluminum unless otherwise specified. | 546 |
| 3340-1197 | Storage module for air bags and plywood as follows (from bottom to top): Plywood Storage (2)26x26 air bags (2)21.5x21.5 air bags (2)16.5x22 air bags (2)16.5x16.5 air bags and (2) 13.5x19.5 air bags. Locate floor mounted in R2 compartment. | 1513 |
| 3340-1200 | Storage module located in [#LOC] compartment. Module shall be designed per customer specific requirement and drawing shall be provided for review and approval. | 671 |
| 3340-1201 | Storage module located in [#LOC] compartment. Module shall be designed per customer specific requirement and drawing shall be provided for review and approval. | 1307 |
| 3340-1202 | Storage module located in [#LOC] compartment. Module shall be designed per customer specific requirement and drawing shall be provided for review and approval. | 1943 |
| 3340-1204 | 1/2" thick black poly box with hand hold cutout on each end located in [#LOC] compartment. The box shall be designed per customer specific requirement and drawing shall be provided for review and approval. | 370 |
| 3340-1214 | Aluminum diamond plate trim on bottom and side edges of speedlay openings. | 434 |
| 3340-1215 | 1.25" diameter spool rod to accommodate plastic roll storage. Includes applicable brackets and quick release pins on each end. Located in [#LOC]. | 176 |
| 3340-1218 | Access thru body roof pan to accommodate DOT / ASME bottle valve access. Includes: Thumb latch type access diamond plate cover. Location: Body roof pan aft vertical side wall centered forward of bottle valve area. | 379 |
| 3340-1219 | Access thru roof. Roof access shall be provided in the rear body for ASME / DOT bottle installation and servicing. A bolt in door shall be located on top of DOT bottle storage area at running long ways sized by engineering to best accommodate service access. Construction shall be consistant with the body roof and accommodate stepping and walking activity. | 1435 |

| Item No. | Description | |
|---|---|---|
| 3340-1220 | Speedy Dry Hopper. Locate in roof compartment above L4. Includes discharge thru bottom of compartment L4 along forward compartment wall with valve for ground level dispensing. Capacity of speedy hopper is 100 lbs. | 1552 |
| 3340-1225 | Diamond plate single axle wheel well. Includes bolt-on composite wheel well liners and bolt-on rubber trim fenderettes. | 1128 |
| 3340-1228 | Horizontal air bag and poly box module for four (4) poly boxes and three (3) customer furnished air bags. Location: R3. | 1943 |
| 3340-1233 | Add a removable cover to the two rear roof top compartment interiors to cover all upper rear body 900 LED lights upper side rear body 900 LED lights and corner electrical harnesses. | 1022 |
| 3340-1237 | Enclosure to box-in the CAFS components and thereby provide an obstruction free usable space in the remainder of the compartment. Locate: [#LOC] | 263 |
| 3340-1240 | Aluminum diamond plate overlays on both sides of the pump module to extend from the top of the pump panel or as applicable to surround openings down to running boards. Overlay shall surround the openings for the speed lay(s) and or tool compartments in the forward area of the pump module and shall be positioned to protect the module surface during tool or hose deployment. | 784 |
| 3340-1246 | CTECH Brand tool box. A (5) five drawer toolbox shall be provided. Finish: Cal Gray drawer face. Drawer size: five (5) 3in. tall drawers. Toolbox dimensions to fit in an opening 36 in W X 18 in H X 24 in deep. Requires shelf above to enclose top drawer. Locate: R1. | 2678 |
| 3340-1249 | Divider for transverse compartment to be bolt in. Locate: between L2/R2 at chassis centerline and aft of partition. Finish is sanded aluminum unless otherwise specified. | 546 |
| 3340-1250 | Provision for reel to be dealer installed after delivery. Provision includes: ceiling mounted Unistrut track spaning front to rear inside compartment to accommodate hydraulic reel model JL-ER. Rollers & additional brackets not included. Locate: L1 ceiling offset forward. | 546 |
| 3340-1251 | Provision for reel to be dealer installed after delivery. Provision includes: ceiling mounted Unistrut track spaning front to rear inside compartment to accommodate hydraulic reel model JL-ER. Rollers & additional brackets not included. Locate: R1 ceiling offset forward. | 546 |
| 3340-1253 | LINE-X Package: Specified Body compartment interior and compartment mounted components (shelves trays toolboardsetc.) to have LINE-X finish. To include pan of hinged doors if applicable. Compartment interior includes floor back and side walls and ceiling as applicable. Location(s): [#LOC]. | 2742 |
| 3340-1269 | Provision for SpaceSaver M2791M single bottle mobile fill station to be installed after delivery. Includes blowout cutout mounting preperation and cover plate. Location: L4. | 612 |
| 3340-1271 | Cover heater. Cover to be aluminum. Finish to match compartment interior. Location: [#LOC]. | 105 |
| 3340-1273 | Diamond plate corner guard shall extend from inside the wall of the hosebed. | 329 |
| 3340-1282 | Stainless steel trim along sides and top edge of each fuel fill opening on driver side of body | 194 |
| 3340-1283 | Speedy Dry Hopper. Locate in roof compartment above L4. Includes discharge thru bottom of compartment L4 along rearward compartment wall with valve for ground level dispensing. Capacity of speedy hopper is 100 lbs. | 1552 |
| 3340-1284 | Swirl plate corner guards for the driver and officer front compartment face. Guards to wrap around the corner and be full height of side assembly or to a max of 96". | 482 |
| 3340-1293 | Stainless Steel hose bed side guard panel for compartment top mounted Portable Tank Rack. The guard panel(s) shall extend approximately 2" above and at either end of the compartment top mounted portable tank rack assembly to help protect painted surfaces. | 1091 |
| 3340-1307 | Speedy Dry Hopper. Locate in roof compartment above L2. Includes discharge thru bottom of compartment L3 along forward compartment wall with valve for ground level dispensing. Capacity of speedy hopper is 100 lbs. | 1552 |
| 3340-1312 | Speedy Dry Hopper. Locate in roof compartment above L2/L3. Includes discharge thru bottom of compartment L3 along forward compartment wall with valve for ground level dispensing. Capacity of speedy hopper is 180 lbs. | 1802 |
| 3350-0000 | Hydraulic hose reel for use with Hurst brand tools. Includes 100' 1/4" Parker Polyflex hose (up to 5000 PSI) and rollers (captive type). Location: [#LOC]. Hose Color: [#COL]. | 2786 |
| 3350-0001 | Air Reel w/electric rewind. 12V with 100' 1/4 in. hose plumbed to the truck air system (unless otherwise specified). Location: [#LOC]. | 3062 |
| 3350-0002 | Low Pressure Utility Air Hose Reel assembly with 175' 3/8 in. low pressure air hose and mini panel. Locate in [#LOC]. | 2786 |
| 3350-0003 | Low Pressure Breathing Air Hose Reel assembly with 175' 3/8 in. low pressure air hose and mini panel. Locate in [#LOC]. | 2934 |
| 3350-0004 | Reel Air. Low Pressure Utility Air Hose Reel assembly (Includes Rollers) with 250' 3/8 in. low pressure air hose. Includes mini panel located in compartment below reel. Located in [#LOC]. | 2938 |
| 3350-0006 | Low Pressure Breathing Air Hose Reel assembly with 250' 3/8 in. low pressure air hose and panel. Locate in [#LOC]. | 2967 |

| Item No. | Description | |
|---|---|---|
| 3350-0007 | High Pressure Breathing Air Hose Reel assembly with 150' 1/4 in. high pressure air hose and panel. Locate in [#LOC]. | 3548 |
| 3350-0008 | High Pressure Breathing Air Hose Reel assembly with 250' 1/4 in. high pressure air hose and panel. Locate in [#LOC]. | 3761 |
| 3350-0009 | Hydraulic hose reel for use with TNT brand tools. Includes 100' 1/4" Parker Polyflex hose (up to 10500 PSI) and rollers (captive type). Location: [#LOC]. Hose Color [#COL]. | 5596 |
| 3350-0010 | Hydraulic hose reel for use with Phoenix brand tools. Includes 100' 1/4" Parker Polyflex hose (up to 5000 PSI) and rollers (captive type). Location: [#LOC]. Hose Color [#COL]. | 2786 |
| 3350-0011 | Hydraulic hose reel for use with Code 3 brand tools. Includes 100' 1/4" Parker Polyflex hose (up to 5000 PSI) and rollers (captive type). Location: [#LOC]. Hose Color [#COL]. | 2786 |
| 3350-0012 | Hydraulic hose reel for use with Amkus brand tools. Includes 100' 1/4" Parker Polyflex hose (up to 10500 PSI) and rollers (captive type). Location: [#LOC]. Hose Color: [#COL]. | 5596 |
| 3350-0013 | Hydraulic hose reel for use with Hurst Centaur brand tools. Includes 100' 1/4" Parker Polyflex hose (up to 10000 PSI) and rollers (captive type). Location: [#LOC]. Hose Color [#COL]. | 5596 |
| 3350-0014 | Hydraulic hose reel for use with Genesis brand tools. Includes 100' 1/4" Parker Polyflex hose (up to 10000 PSI) and rollers (captive type). Location: [#LOC]. Hose Color [#COL]. | 5596 |
| 3350-0015 | Hydraulic hose reel for use with Holmatro brand tools. Includes 100' 1/4" Parker Polyflex hose (up to 10000 PSI) and rollers (captive type). Location: [#LOC]. Hose Color [#COL]. | 5596 |
| 3350-0016 | 12' Lead/Supply Line for high pressure hydraulic reel. To be used with 10000 PSI hyd reels. Locate on reel in [#LOC]. | 953 |
| 3350-0017 | 30' Lead/Supply Line for high pressure hydraulic reel. To be used with 10500 PSI hyd reels. Locate [#LOC]. | 1416 |
| 3350-0018 | 12' Lead/Supply Line for low pressure hydraulic reel. To be used with 5000 PSI hyd reels. Locate [#LOC]. | 763 |
| 3350-0019 | 30' Lead/Supply Line for low pressure hydraulic reel. To be used with 5000 PSI hyd reels. Locate [#LOC]. | 1199 |
| 3350-0025 | Hydraulic hose reel for use with TNT brand tools. Includes 100' 1/4" synthetic rubber hose (up to 10500 PSI) and rollers (captive type). Location: [#LOC]. Hose Color [#COL]. | 5596 |
| 3350-0026 | Hydraulic hose reel for use with Amkus brand tools. Includes 100' 1/4" rubber hose (up to 10500 PSI) and rollers (captive type). Location: [#LOC]. Hose Color: [#COL]. | 5596 |
| 3350-0029 | Route hydraulic lead line(s) to [#LOC]. | 113 |
| 3350-0030 | Low pressure utility air hose reel w/spring rewind. Includes 50' 3/8" low pressure air hose rollers ball stop and and shut-off valve accessible from ground. Loc: [#LOC]. | 1542 |
| 3350-0031 | High Pressure Breathing Air Hose Reel assembly with 300' 1/4 in. high pressure air hose and panel. Locate [#LOC]. | 4140 |
| 3350-0032 | Akron utility air hose reel. Includes 200' 3/8" hose and reel mounted rollers (captive type). Loc: [#LOC]. | 1638 |
| 3350-0033 | Akron hydraulic hose reel for use with Hurst brand tools. Includes 100' 1/4" Parker Polyflex hose (up to 5000 PSI) and rollers (captive type). Location: [#LOC]. Hose Color: [#COL]. | 2590 |
| 3350-0035 | A set of hydraulic ports will be located in the front bumper for use with Hurst Brand tools. Ports should have quick disconnects be colored black and blue so a lead may be plugged directly into them. Locate on driver side under diamond plate lid. | 490 |
| 3350-0036 | Hydraulic hose reel for use with Hurst Centaur brand tools. Includes 150' 1/4" Parker Polyflex hose (up to 10000 PSI) and rollers (captive type). Location [#LOC]. Hose Color [#COL]. | 6813 |
| 3350-0037 | Streamline fittings for hurst Centaur reels and tools. This covers 3 hose to lead connections and 6 tool to reel connections. | 3731 |
| 3350-0040 | 12' Lead/Supply Line for high pressure hydraulic reel. To be used with 10500 PSI hyd reels. Locate on reel in [#LOC]. | 1001 |
| 3350-0041 | 30' Lead/Supply Line for high pressure hydraulic reel. To be used with 10500 PSI hyd reels. Locate [#LOC]. | 1486 |
| 3350-0043 | Akron hydraulic hose reel for use with Amkus brand tools. Includes 100' 1/4" Parker Polyflex hose (up to 10500 PSI) and rollers (captive type). Location: [#LOC]. Hose Color: [#COL]. | 3994 |
| 3350-0045 | Akron reel to be powder painted custom color. Requires approval from vendor on color. Location: [#LOC]. Reel Color: [#COL]. | 141 |
| 3350-0046 | 8' Lead/Supply Line for high pressure hydraulic reel. To be used with hyrdraulic reels between 10000 to 10500 PSI. Locate: [#LOC]. | 464 |
| 3350-0048 | Low Pressure Utility Air Hose Reel assembly with 250' 3/8 in. low pressure air hose. Locate in [#LOC]. | 2207 |
| 3350-0049 | Streamline fittings for Hurst reels and tools. This covers 3 hose to lead connections and 6 tool to reel connections. | 3731 |
| 3350-0052 | 6' Lead/Supply Line for high pressure hydraulic reel. To be used with 10000 PSI hyd reels. Locate on reel in [#LOC]. | 917 |
| 3350-0053 | 40' Lead/Supply Line for low pressure hydraulic reel. To be used with 5000 PSI hyd reels. Locate [#LOC]. | 1598 |

| Item No. | Description | |
|---|---|---|
| 3350-0057 | Streamline fittings for Hurst reels. This covers 3 streamline fittings on 3 hose reels. | 1415 |
| 3350-0062 | Hydraulic hose reel for use with Hurst brand tools. Includes rollers (captive type). Does not include hydraulic hose. Location: [#LOC]. | 2138 |
| 3350-0063 | Low Pressure Utility Air Hose Reel assembly with 175' low pressure 1/2" air hose and mini panel. Locate in L2 offset rearward of cord reel set back 24" from compartment opening with rewind switch located next to the breaker box locate the air panel in L2 between lower air bag rack and adjustable shelves with protective shield above air panel run reel plumbing to dunnage area forward of drivers side coffin compartment for the customer installed air compressor. | 2950 |
| 3350-0066 | 16' Lead/Supply Line for low pressure hydraulic reel. To be used with 5000 PSI hyd reels. Locate [#LOC]. | 810 |
| 3350-0067 | Dual rollers for cord reel and air reel mounted thru bolt-on bracket. Includes mounting rewind switches towards center of bracket. Locate in B1 compartment. | 979 |
| 3350-0068 | A lead line #8 5000 psi hydraulic hose line routed from IHT manifold to B2 lower rear wall. | 545 |
| 3350-0069 | Hydraulic tool ports with TNT RV-120 remote actuation vlv. Quick connect fittings on vlv to be for Phoenix brand tools. vlv with tool fittings to be located on officer side of front bumper. Includes hyd supply lines run to B1. | 2144 |
| 3350-0072 | A lead line 5000 psi hydraulic line routed from B2 lower forward wall to dunnage pan located MAS heat exchanger | 779 |
| 3350-0073 | A return lead line 5000 psi hydraulic line routed from B2 lower forward wall to dunnage pan located generator | 779 |
| 3350-0077 | Hydraulic hose reel for use with Amkus brand tools. Includes 150' 1/4" Parker Polyflex hose (up to 10500 PSI) and rollers (captive type). Location: [#LOC]. Hose Color: [#COL]. | 5876 |
| 3350-0078 | Hydraulic reels to be mounted in aluminum tray with a cutout for roller assembly. A 1" lip around roller tray assembly to contain any fluids that may leak from hyd reel. Location [#LOC]. | 453 |
| 3350-0080 | Captive roller assemblies for (1)cord reel and (2)hyd reels mounted thru bolt-on bracket. Includes mounting rewind switches adjacent to each roller for it respective reel on bracket. Locate in R1 compartment 11" in from door opening. | 1312 |
| 3350-0083 | Hydraulic hose reel for use with Amkus brand tools. Includes rollers (captive type). Does not include hydraulic hose. Location: [#LOC]. | 2474 |
| 3350-0084 | 16' Lead/Supply Line for high pressure hydraulic reel. To be used with 10500 PSI hyd reels lines are red and black in color. Compatible with Amkus tool brand. Locate on reel in [#LOC]. | 1172 |
| 3350-0085 | 16' Lead/Supply Line for high pressure hydraulic reel. To be used with 10500 PSI hyd reels lines are yellow and black in color. Compatible with Amkus tool brand. Locate on reel in [#LOC]. | 1172 |
| 3350-0088 | 40' Lead/Supply Line for high pressure hydraulic reel. To be used with 10500 PSI hyd reels. Locate: [#LOC]. | 1888 |
| 3350-0089 | CMW model 6011-W3-H1 dual reel low pressure working air and hydraulic hose reel combo. Includes 100' of 300 PSI blue air hose and 100' of 10500 PSI red/black hydraulic hose compatible with Amkus tools. Located on ceiling of compartment B1 offset to officer side. | 7421 |
| 3350-0090 | CMW model 6011 dual hydraulic hose reel for use with 10500 PSI Amkus tools. Reel SHALL NOT be supplied with hose or ball stops. Located on ceiling of compartment B1 offset to driver side. | 5204 |
| 3350-0091 | 15' Lead/Supply Line for high pressure hydraulic reel. To be used with 10500 PSI hyd reels. Locate on reel in [#LOC]. | 1095 |
| 3350-0092 | Hydraulic hose reel for use with Holmatro brand tools. Includes 60' of Core Technology hose installed (up to 10000 PSI) and rollers (captive type). Location: [#LOC]. Hose Color: [#COL]. | 5322 |
| 3350-0098 | 45' Lead/Supply Line for low pressure hydraulic reel. To be used with 5000 PSI hyd reels. Locate [#LOC]. | 1664 |
| 3350-0100 | 31' to 40' Core Technology Lead/Supply Line for high pressure hydraulic reel. To be used with 10000 PSI hyd reels. Locate on reel in [#LOC]. | 1961 |
| 3350-0101 | Up to 10' Core Technology Lead/Supply Line for high pressure hydraulic reel. To be used with 10000 PSI hyd reels. Locate on reel in [#LOC]. | 1331 |
| 3350-0102 | Hydraulic reel rewind switch. Switch located [#LOC]. | 133 |
| 3350-0104 | 8' Lead/Supply Line for high pressure hydraulic reel. To be used with 10500 PSI hyd reels. Locate on reel in [#LOC]. | 902 |
| 3350-0105 | Low pressure utility air hose reel assembly with 250` low pressure air hose and mini panel shall be plumbed to the cascade system for low pressure utility air. Locate in [#LOC]. | 2938 |
| 3350-0108 | CMW model 6011 dual hydraulic hose reels for use with 5000 PSI tools shall be provided and installed. Includes two (2) sets of 100' 1/4" twinline hose (up to 5000 PSI) hose guides and ball stops. Includes (2) 30' lead/supply lines. Location: [#LOC]. Hose Color: [#COL]. | 13564 |
| 3350-0111 | Bulk Head Fittings including (2) 3' Pig Tails. Locate R3 back wall offset forward and 10" off compartment floor. | 929 |
| 3350-0112 | Low Pressure Breathing Air Hose Reel assembly with 175' low pressure air hose. Includes: Co-locating reel controls on cascade system control paanel. Locate: R5 ceiling towards rear. | 3288 |

| Item No. | Description | |
|---|---|---|
| 3350-0113 | Low pressure utility air hose reel assembly with 250` low pressure air hose. Reel shall be plumbed to the cascade system for low pressure utility air. (controls for reel provided on air system panel). Locate: driver roof compartment (above L2 forward). Reel color: Black. | 2938 |
| 3350-0119 | Akron utility air hose reel. Capacity for 200' 3/8" hose (hose not included) and reel mounted rollers (captive type). Loc: L3 forward. | 1357 |
| 3350-0121 | 30' Lead/Supply Line for high pressure hydraulic reel. To be used with 10000 PSI hyd reels. Locate [#LOC]. | 1416 |
| 3350-0122 | Mounting to be provided for twin line hydraulic hose reel. Includes mounting only. Location: [#LOC]. | 546 |
| 3350-0123 | Bulk Head Fittings including (2) 5' Pig Tails. Locate R3 back wall offset forward and 10" off compartment floor. | 1147 |
| 3350-0124 | Air reel w/electric rewind 100' of .375" hose. Breathing Air to plumbed to the B/A cascade system for low pressure utility air. Includes 100' 3/8" low pressure air hose rollers and ball stop (controls for reel included with breathing air system). Location: Roof top compartment above R4 rearward. | 2207 |
| 3350-0125 | Rollers captive roller assemblies for (1) cord reel and (2) hyd reels mounted thru bolt-on bracket. Includes mounting rewind switches adjacent to each roller for the respective reel. Locate: L2. | 1312 |
| 3350-0126 | Rollers captive roller assemblies for (1) cord reel and (2) hyd reels mounted thru bolt-on bracket. Includes mounting rewind switches adjacent to each roller for the respective reel. Locate: R2. | 1312 |
| 3350-0127 | Hydraulic hose reel for use with Genesis brand tools. Includes Genesis 100' 1/4" twinline hose with One Step coupler and rollers (captive type). Location: [#LOC]. Hose Color [#COL]. | 7523 |
| 3350-0129 | Bulk Head Fittings including (2) 5' Pig Tails. Locate R3 back wall offset rearward and 10" off compartment floor. | 1147 |
| 3350-0131 | CMW model 6011 dual hydraulic hose reel for use with 10500 PSI Genesis tools. Reel SHALL NOT be supplied with hose or ball stops. Located [#LOC]. | 5204 |
| 3350-0132 | Air Reel w/electric rewind. 12V with 100' .375" hose plumbed to the truck air system (unless otherwise specified). Location: [#LOC]. | 3062 |
| 3350-0134 | Hydraulic hose reel Hannay model EF2516-17-18 for use with TNT brand tools. Includes rollers (captive type). Does not include hydraulic hose. Location: [#LOC]. | 2722 |
| 3350-0135 | Remote actuation hydraulic valve for hydraulic tool utility (reel outlet etc). Includes TNT RV-120 valve and hydraulic supply lines run from dealer supplied tool pump/power unit to RV120 valve and from RV-120 valve to hydraulic utility (reel outlet etc). Lines between RV-120 valve and reel to have quick connect fittings. RV-120 valve location: Front Bumper. | 2144 |
| 3350-0136 | The lead lines connecting the hydraulic tool outlet valve to the power unit shall have #6 FJIC connections on the power unit side and #6 MNPT connections on the valve side. | 54 |
| 3350-0137 | Air reel w/electric rewind 100' of .375" hose plumbed to the cascade system for low pressure utility air. Includes 100' 3/8" low pressure air hose rollers and ball stop (controls for reel included with breathing air system). Location: [#LOC]. | 2207 |
| 3350-0138 | Upgrade hydraulic hose on a reel to Hurst brand yellow/grey with Streamline fitting (EA). | 2966 |
| 3350-0140 | CMW model 6011 dual reel electric cord and hydraulic hose reel combo. Includes 100' of 10/4 yellow cord and 100' of 5000 PSI [#COL] (vendor supplied) hydraulic hose compatible with Hurst tools. Location: [#LOC]. | 8946 |
| 3350-0141 | Rollers captive for air reel mounted on reel. | 395 |
| 3350-0142 | CMW model 6011 dual reel electric cord and hydraulic hose reel combo. Includes 100' of 10/3 black cord and 100' of 10500 PSI [#COL] (vendor supplied) hydraulic hose compatible with TNT tools. Location: [#LOC]. | 8946 |
| 3350-0144 | CMW model 6022 dual hydraulic hose reel for use with 10500 PSI Amkus tools shall be provided and installed. Includes two (2) sets of 200' 1/4" twinline hose (up to 10500 PSI) hose guides and ball stops. Location: [#LOC]. Hose Color: [#COL]. | 11930 |
| 3350-0145 | CMW model 6011 dual hydraulic hose reel for use with 10500 PSI Amkus tools shall be provided and installed. Includes two (2) sets of 100' 1/4" twinline hose (up to 10500 PSI) hose guides and ball stops. Location: [#LOC]. Hose Color: [#COL]. | 10863 |
| 3350-0146 | CMW model 6011 dual hydraulic hose reel for use with 10500 PSI tools. Reel SHALL NOT be supplied with hose or ball stops. Location: [#LOC] | 5204 |
| 3350-0149 | Low Pressure Utility Air Hose Reel assembly with 175' 3/8 in. low pressure air hose and mini panel shall be plumbed to the CAF system for low pressure utility air. Locate in [#LOC]. | 2786 |
| 3350-0152 | Genesis One Step coupler with 100' of Genesis twin line hydraulic hose ipos (EA). | 1927 |
| 3360-0000 | Awning Side Body 16'. Zip-Dee Awning. Locate on [#LOC]. Awning color will be [#COL]. Awning will be hooked into Door ajar system. | 3316 |
| 3360-0001 | Awning Side Body 18'. Zip-Dee Awning. Locate on [#LOC]. Awning color will be [#COL]. Awning will be hooked into Door ajar system. | 3464 |
| 3360-0002 | Awning Side Body 19'. Zip-Dee Awning. Locate on [#LOC]. Awning color will be [#COL]. Awning will be hooked into Door ajar system. | 3584 |

| Item No. | Description | |
|---|---|---|
| 3360-0003 | Awning Fits 20' and 24' Body. Zip-Dee Awning. Locate on [#LOC]. Awning color will be [#COL]. Awning will be hooked into Door ajar system. | 3698 |
| 3360-0004 | Hatch escape for rescue walk-in. Hatch shall be located in the best suitable location for the application. | 1403 |
| 3360-0006 | Ramp. There shall be a heavy duty ramp supplied for deployment of a robot. The ramp shall be one piece approx 50" wide x 90" long. Ramp shall be stored in an under floor compartment directly below the robot entry/storage compartment. | 2332 |
| 3360-0007 | Access Ladder Track Style | 5928 |
| 3360-0008 | Air Conditioner/Heater - 110V Roof Mounted. | 3404 |
| 3360-0009 | DOT flipstyle placards. Install DOT placards with "EXPLOSIVE" plates up to 1.6. (1) on officer side of front bumper (1) above R3 (1) above L1 and (1) on rear centered. | 919 |
| 3360-0010 | Awning Side Body 17'. Zip-Dee Awning. Locate on [#LOC]. Awning color will be [#COL]. Awning will be hooked into Door ajar system. | 3387 |
| 3360-0011 | Awning Fits 21' and 26' Body. Zip-Dee Awning. Locate on [#LOC]. Awning color will be [#COL]. Awning will be hooked into Door ajar system. | 3799 |
| 3360-0012 | Awning Side Body 22'. Zip-Dee Awning. Locate on [#LOC]. Awning color will be [#COL]. Awning will be hooked into Door ajar system. | 3371 |
| 3360-0013 | Zico access ladder. Includes required step lights. | 1944 |
| 3360-0015 | Danhard A/C and heating system. The evaporator shall be wall mounted where designer thinks best suited. | 6995 |
| 3360-0016 | Plywood rack to hold up to 10 sheets of plywood. 48" wide x 92" deep. Locate in transverse area of [#LOC]. | 1685 |
| 3360-0017 | Hanning plywood rack to hold up to 5 sheets of plywood. 48" wide x 92" deep. Locate in transverse area under Stokes basket racks. | 1804 |
| 3360-0018 | Front body panels to be painted smooth plate. | 992 |
| 3360-0019 | Awning Body 8'. Zip-Dee Awning. Locate on [#LOC]. Awning color will be [#COL]. Awning will be hooked into Door ajar system. | 2749 |
| 3360-0022 | Diamond plate box will be located on top of the body in front of the right side roof compartments. Box will hold small inflatable boat and be hinged towards the front of the truck. Box will be approx 50" L x 35" W x as tall as roof top compartments D (exterior dims). | 1576 |
| 3360-0023 | Spacer plate for Custom Chassis. Requires 4" additional to cab and body gap due to vertical exhaust requirements. This will include two 6" diamond plate trim plates attached to the body. | 293 |
| 3360-0024 | Raise compartment floor in transverse area over frame between [#LOC] approx 20" due to Pump. | 948 |
| 3360-0025 | Plywood rack to hold up to 10 sheets of plywood 3/4" thick x 48" wide x 92" deep. Locate in transverse area of L2/R2. | 1685 |
| 3360-0026 | Double stacked double crosslay located in the rearward area of L1/R1. Cross lay will hold 250' of 1.75 double jacket hose. | 855 |
| 3360-0027 | Awning Fits 22' Body. Zip-Dee Awning. Locate on [#LOC]. Awning color will be [#COL]. Awning will be hooked into Door ajar system. | 3900 |
| 3360-0028 | There will be storage for 1 stokes 2 backboards and 2 pike poles in forward L3/R3. Stokes will be verticaly mounted with backboards evenly mounted at top vertical right behind it. Then 2 pike poles under backboards. A divider will be next to Backboard storage running side to side from L3 opening to R3 opening. | 2140 |
| 3360-0029 | Provide (4) four two inch conduits with pull wires in them for dealer/customer installed equipment. Locate (1) one from left side of the body to right side of the body (1) one from under driver side desk to under officers seat in the cab (1) one from inside electrical junction box to the outside electrical junction box and (1) one from electrical junction box to robot storage area down low offset towards the officer`s side on the back wall. | 497 |
| 3360-0030 | E-One supplied/Van-Mor installed. Roof mounted A/C Heat and Drain Kit (Penguin). Locate on body roof best location. | 1113 |
| 3360-0031 | E-One supplied/Van-Mor installed Escape Hatch. It shall be located in the center of the truck. | 959 |
| 3360-0032 | Ramp Robot Deployment - Bi-Fold single Assembly Ramp - Install heavy duty robot ramp on the [#LOC] floor centered in the opening. Size will depend opening. | 2745 |
| 3360-0033 | Awning Body locate on [#LOC] over slide out room. Awning color will be [#COL]. | 2290 |
| 3360-0034 | HVAC unit will be located on the officer side above R1. | 2546 |
| 3360-0035 | Awning Side Body 14'. Zip-Dee Awning. Locate on [#LOC]. Awning color will be [#COL]. Awning will be hooked into Door ajar system. | 2789 |
| 3360-0037 | There shall be a cover with 1.5" lips on the top left and front edge of the cover covering the water tank and plumbing on the officer's side in R4. | 193 |
| 3360-0038 | There will be storage in R4 rearward of vertical partition for this removable table. This will consist of nylatron pads spacers and straps to hold the table in place. | 483 |
| 3360-0039 | Air Conditioner/Heater - 110V Roof Mounted with thermostat near entrance. | 3404 |
| 3360-0041 | Awning Side Body 12'. Zip-Dee Awning. Locate on [#LOC]. Awning color will be [#COL]. Awning will be hooked into Door ajar system. | 2661 |

| Item No. | Description | |
|---|---|---|
| 3360-0042 | Front body panels to be painted smooth FRP. | 996 |
| 3360-0044 | Roof mtd A/C system Penguin 13500 BTU w/ 5600 BTU heat. Locate on body roof wired to auto transfer switch. | 3989 |
| 3360-0045 | (1) 72" wide stainless steel underbody compartment with 500 lb. capacity Jonathan brand ball bearing slide drawer on the driver`s side of the body forward of the rear wheels. The door face shall be constructed of brushed stainless steel and a locking bent D-ring style dead bolt latching mechanism shall be installed. The door of the drawer shall have a section of black UHMW 1" x 3" rub rail to match the lower body rub rail. The compartment shall be lighted with the parking brake switch. | 6703 |
| 3360-0048 | Raise compartment floor in transverse area over frame between L1/R1 and L2/R2 approx 11" to clear ladder storage. | 948 |
| 3360-0049 | Reflective [#COL] 3M Diamond Grade striping positioned to match the cab door on the same side of the unit located in the lower body entry door panel. | 174 |
| 3360-0051 | Danhard A/C and heating system. The Evaporator shall be mounted on the forward bulkhead wall offset to driver side approximately 24" off center of interior body to edge of unit. | 6995 |
| 3360-0053 | Raise L2/R2 compartment floor over frame approx 8" to accommodate pump and plumbing. | 948 |
| 3360-0054 | Awning model to be a Mirage by Carefree of Colorado. 120V 2.5 amps. Carefree roll-up style automatic awning self supported. 21' automatic retract with unfavorable wind conditions. Install one on [#LOC] side. Fabric color to be [#COL]. | 8722 |
| 3360-0055 | A deflector shield will be placed on the upper front of the body to protect the generator and light tower. Deflector will be at the top forward section of the body and constructed of 3/16" aluminum treadplate. | 477 |
| 3360-0056 | Roof mtd A/C system Penguin 13500 BTU w/ 5600 BTU heat. Locate on body roof wired to generator. | 3989 |
| 3360-0057 | Roof mtd A/C system Penguin 13500 BTU w/ 5600 BTU heat. Locate on body roof wired to auto transfer switch and includes 30 AMP auto-eject with Red cover. | 4919 |
| 3360-0061 | Raise compartmant floor 2" to accommodate ladder tunnel. Location: L3/R3 | 997 |
| 3360-0062 | Raise compartment floor in transverse area over frame between L2/R2 approx 13" to clear ladder storage. | 948 |
| 3360-0063 | Adjustable compartment dividers Qty (3) shall be (1) divider installed in each forward roof compartment and (1) installed in the aft driver side roof top compartment between the ASME storage bottles and the reels. The divider shall span side to side and be adjustable front to rear. The use of Unistrut or equal materials as required shall provide the adjustability for each divider. The divider plate shall be 3/16" smooth aluminum. Finish shall be sanded aluminum unless other wise stated. | 1718 |
| 3360-0065 | Awning model to be a Mirage by Carefree of Colorado. 120V 2.5 amps. Carefree roll-up style automatic awning self supported. 20' automatic retract with unfavorable wind conditions. Install on [#LOC]. Fabric color to be [#COL]. | 8722 |
| 3360-0067 | Stainless steel pan for rehab body roof mounted A/C unit. Includes drain line that does not drip on drivelines. | 725 |
| 3360-0068 | Refrigerator Norcold DE-0251T. Power to be wired to shoreline and have a disconnect to run of chassis 12V. Locate in Re-hab module on driver side in forward lower corner cabinet. | 1574 |
| 3360-0070 | Floor raise in compartment L1/R1. Raise compartment floor over frame approx 6" to accommodate clearance of chassis components: driveline pump & plumbing. | 948 |
| 3360-0071 | Access thru roof. Roof access shall be provided in the rear body for compressor installation and servicing. A removable panel shall be located at the center of the body running long ways sized by engineering to best accommodate breathing air system. Locate: Above & between L1/R1 and L2/R2. | 1435 |
| 3360-0072 | Grab handle chrome EA. One chrome grab handle will be attached to each roof top compartment lid. Locate: in line and centered between lid latches. | 171 |
| 3360-0073 | Roof top compartment lighting package ROM V4 LED. IPOS (16'-20' body) | 1688 |
| 3360-0074 | Roof top compartment lighting package ROM V4 LED. IPOS (21'-24' body) | 2531 |
| 3360-0075 | Hatch removable. A body roof hatch shall be provided to accommodate water tank access and service. Location: Between L1/R1 centered in catwalk. | 270 |
| 3360-0076 | Awning model to be a Mirage by Carefree of Colorado. 120V 2.5 amps. Carefree roll-up style automatic awning self supported. 18' automatic retract with unfavorable wind conditions. Locate: Driver side of rescue body. Fabric color: RED. | 8722 |
| 3360-0077 | Hatch roof. Provide a roof hatch in the body walkway located over the water tank or a compressor to accommodate servicing. | 270 |
| 3360-0079 | Lift up rear staircase with pneumatic actuators for access to B1. Plumbed to the chassis air system. Includes step lights control switching NFPA warning system and interlocks. Controls on right rear body panel. | 8208 |

| Item No. | Description | |
|---|---|---|
| 3360-0080 | Vertical exhaust pipe shall be provided on the officer side of the apparatus. This will include the vertical exhaust support located in the upper open dunnage compartment. This includes open transition area from top of body to below frame rails for routing purposes. Includes heat shielding as required to minimize heat transfer into the L1/R1 transverse compartment. | 2541 |
| 3360-0081 | Awning model to be a Mirage by Carefree of Colorado. 120V 2.5 amps. Carefree roll-up style automatic awning self supported. 19' automatic retract with unfavorable wind conditions. Install one on officer side. Color to be Gray. | 8722 |
| 3360-0086 | Access thru roof. Roof access shall be provided in the rear body for compressor installation and servicing. A removable panel shall be located at the center of the body running long ways sized by engineering to best accommodate breathing air system. Locate: Above & between L3/R3. | 1435 |
| 3360-0087 | Air Bag storage. A vertical air bag storage module for six (6) customer furnished air bags shall be provided. Module size to be 62T x 10W x max available depth. Brand: Paratech model (2) two KPI 22 (2) KPI 32 and (2) two spares for customer future use. Locate: L4 forward of partition. | 2006 |
| 3360-0088 | Awning model to be a Mirage by Carefree of Colorado. 120V 2.5 amps. Carefree roll-up style automatic awning self supported. 17' automatic retract with unfavorable wind conditions. Awning to be wired to door ajar system. Install one on officer side. Fabric color RED. | 8722 |
| 3360-0089 | Reflexite V98 striping. Striping pattern color and position of striping to match cab door on the same side of body. Locate: body entry door panel. | 174 |
| 3360-0090 | Bracket set. Brackets to accommodate securing an inflatable boat to body roof. Four (4) securing brackets shall be provided. Brackets are aluminum construction and are to be welded to roof plate. Brackets are non rated. Exact pattern for bracket layout to be determined by E-1 engineering to best accommodate inflatable specified in quote. Finish is sanded aluminum. | 519 |
| 3360-0091 | Winch assembly manual crank type winch 1100 lb. load capacity with 2 in. x 20' L Strap. Assembly mounting bracket to be removable from body roof. Locate: body roof centerline approx 12 feet forward of rear body. Winch to be mounted on a fabricated stand. Construction: Minimum 1/4" smooth aluminum. Finish : sanded aluminum. | 1087 |
| 3360-0092 | Divider roof compartment set of (4) four. Adjustable dividers shall be installed in each roof compartment. The divider shall span from side to side and be adjustable front to rear. The use of Unistrut or equal materials shall providefor adjustability as required for each divider. The divider plate shall be 3/16" smooth aluminum. Locate (1) divider in each roof top compartment. | 1070 |
| 3360-0093 | Carefree roll-up style automatic awning self supported. 17' automatic retract with unfavorable wind conditions. Awning to be wired to door ajar system. Install one on officer side. Color Gray. The heavy-duty aluminum casing shall be White. | 8722 |
| 3360-0094 | Roof top compartment lighting package ROM V4 LED with (5) roof top box's. IPOS (16'-20' body) | 2109 |
| 3360-0095 | Roof top compartment lighting package ROM V4 LED. IPOS (21'-24' body) package to accommodate (6) six roof top compartments. | 3425 |
| 3365-0011 | Floor mounted roll-out tray. Includes 250lbs. tray capacity. Mount on [#LOC] floor. | 754 |
| 3365-0059 | SCBA/Fire Extinguisher storage rack. Locate in [#LOC]. To hold (4) bottles- (2) wide/(2)high. Bottles to be stored angled upward in the compartment. The bottom and sides are to include ribbed rubber inserts. | 389 |
| 3365-0113 | Pike Pole Mounting Tube locate in catwalk on walkway wall on Officer's side. | 252 |
| 3365-0182 | Pike Pole Mounting Tube locate in catwalk on walkway wall on Driver's side. | 252 |
| 3365-0250 | Two (2) stainless steel hooks shall be provided in the cab behind the seats to be used as coat hooks. NYPD only. | 173 |
| 3365-0291 | Double hard suction storage rack (side by side). Driver side compartment top. Includes spring hold downs with scuff plates (as applicable). | 848 |
| 3365-0313 | Double hard suction storage rack. One (1) rack located above the other. Officer side in ladder track. Includes spring hold downs with scuff plates (as applicable). Rack shall accommodate 3" hard suction hose. | 847 |
| 3365-0355 | Hard suction Storage Box located in the drivers side roof top compartment. The storage to be boxed off inside roof top compartment. Includes vertical hinged smooth plate door (wired to door ajar) w/push-button latch. Storage to hold [#LOC] 6" x 10' hard suction hoses. | 2332 |
| 3365-0356 | Ladder storage thru tank for (1) 2-section 24' extension (1) 14' roof (1) 10' attic with feet and (2) pike poles. Provide retaining straps to hold contents stationary. Reduces selected water tank capacity by approximately 250 gallons for pumpers and 300 gallons for tankers. | 3308 |
| 3365-0413 | A module formed from .188" aluminum treadplate shall be provided and installed on the driver side interior walkway. This module shall be 13.75" high x 18.5" wide and the full length of the interior to contain the ladder/pike pole assortment and to become the base of the bench seat assembly. It shall have a rear access door hinged on the aisle side with a single point bent D-ring latch assembly. | 5427 |
| 3365-0422 | Ladder storage through tank for (1) 2-section 24' extension (1) 14' roof (1) 10' attic with feet(2) pike poles and (2) backboards. Reduces selected water tank capacity by approximately 350 gallons. | 3745 |

| Item No. | Description | |
|---|---|---|
| 3365-0424 | Ladder tunnel. Rack to hold (1) 24'-2 section (1) 14' roof ladder (1) 12' D-handle pike pole and (1) 8' D-handle pike pole. | 3321 |
| 3365-0429 | Hard suction Storage Box located in the driver side roof top compartment. The storage to be boxed off inside roof top compartment. Includes vertical hinged smooth plate door (wired to door ajar) w/push-button latch. Storage to hold (2) 6" X 12' hard suction tubes. | 2332 |
| 3365-0444 | Ladder tunnel. Located high as possible in B1. Tunnel to be a compact design 19.75 in. Tall X full width of B1 X 16 ft- 4 in. deep. Tunnel sized to stow (1) 24` 2-section ladder (1) 16` roof ladder (1) 14` combination ladder (1) 10` folding attic ladder. Tunnel option will reduce the compartment area of the lower body. | 4325 |
| 3365-0450 | Triple hard suction storage rack. Officer side in ladder track. Includes NFPA restraining straps. Rack shall accommodate 3" hard suction hose. | 1160 |
| 3365-0459 | Box storage rack. Locate in [#LOC]. (2) wide/(2) high. Each compartment to be 8" wide x 10" high. Box to be angled upward in the compartment. No ribbed rubber. | 389 |
| 3365-0460 | Box storage rack. Locate in [#LOC]. (1) wide/(2) high. Each compartment to be 12" wide x 10" high. Box to be angled upward in the compartment. No ribbed rubber. | 336 |
| 3365-0462 | Pike pole storage tubes with locking end bolt in. Qty (2). One (1) tube oriented to and as close as possible to driver side of door opening and one (1) tube oriented to and as close as possible to officer side of door opening. Pike poles not includes (sold separately). Finish is sanded aluminum. Locate L2/R2 up high to rear wall of compartment. | 601 |
| 3365-0463 | Broom / Shovel storage tubes bolt in. (1) of each Qty (2) for tools with straight handles. One (1) tube oriented as close as possible to driver side of door opening and one (1) tube oriented as close as possible to officer side of door opening. Broom and Shovel not included (sold separately). Finish is sanded aluminum. Locate: L2/R2 up high on forward wall of compartment. If (2) pair are required locate center of upper tube set 8 inches below door opening and the second pair 13 inches above extended floor mounted tray. | 601 |
| 3365-0470 | Hard suction Storage Box located in the officer side roof top compartment. The storage to be boxed off inside roof top compartment. Includes vertical hinged smooth plate door painted job color as applicable (wired to door ajar) w/D-ring latch. Storage to hold (2) 6" X 10' hard suction tubes horizontal side by side.. | 2332 |
| 3365-0496 | Ladder tunnel. Tunnel to be a compact design and approximately 25 in. Tall X 32 in. Wide X approx 12 ft 3 in. deep at top. Tunnel sized to stow (1) 20` 2-section ladder at top driver side (6) 12` pike poles at top officer side (1) Stokes basket center (1) Little Giant Model 17 at bottom. Tunnel option will reduce transverse compartment area of the lower body. Locate: B1 high as possible. | 4172 |
| 3365-0540 | Ladder tunnel. Tunnel to be a compact design configured to stow (1) CJL-14 (1) Little Giant 1A-17 (1) 36 in. long closet hook with D-handle (1) 48 in. long trash hook with D-handle. Tunnel option will reduce the compartment area of the lower body. Locate: B1 high as possible. | 3009 |
| 3365-0541 | Tunnel ladder. An aluminum diamond plate storage tunnel shall be provided to stow (1) FL-10. The tunnel shall have a smooth aluminum hinged access door with a sanded finish. Locate: Body roof top walk way against driver side boxs and flush with rear of body. | 794 |
| 3365-0558 | Recessed folding ladder storage assembly located behind the lift up stair case. Assembly constructed of smooth aluminum plate and sized to store a 12' ladder with feet. Requires notching of all transverse compartment walls at center ceiling level. Ladder not included. | 639 |
| 3365-0563 | A module formed from .188" aluminum treadplate shall be provided and installed on the driver side interior walkway. This module shall be as high and wide as necessary to contain the ladder assortment and to become the base of the bench seat assembly. It shall have a rear access door hinged on the aisle side with bent D-ring handle and sliding locking pins. | 6955 |
| 3365-0612 | The ladder storage shall be designed so that the ground ladders shall be not be nested and can be individually removed. | 549 |
| 3365-0622 | Triple hard suction storage rack. Driver side in ladder track. Includes NFPA restraining straps. Rack shall accommodate 2.5" (or) 3" hard suction hose. | 1160 |
| 3365-0635 | Hard suction storage box horizontal side by side. Located in the driver's side hose bed. Includes drop down smooth plate door (wired to door ajar) w/bent D-ring latch hose bed style top and flooring. Box to hold (2) 6" x 10' long tubes. | 1816 |
| 3365-0655 | Ladder tunnel. Tunnel sized to properly stow (1) CJL-14 combination ladder & (1) FL-10 roof ladder. Located: B2. | 2440 |
| 3365-0692 | Ladder tunnel. Tunnel sized to properly stow (1) PEL 3-35 (1) PEL 2-28 (1) PRL-16 & (1) CJL-14. Tunnel will reduce transverse usable space in body compartments. Located: B1. | 3852 |
| 3365-0693 | Ladder tunnel. Tunnel sized to properly stow (1) FL-12 attic ladder with feet. Located: B1. | 583 |
| 3365-0694 | Rack SCBA/Fire Extinguisher vertical storage rack. A vertical storage rack to hold (4) four bottles stored angled upward in the compartment. openings are to include ribbed rubber inserts. Each storage slot from the bottom to be 11" wide x 11" high with the top opening size to be the remainder of to over all height. Locate: R2 per customer approval drawing. | 2009 |

| Item No. | Description | |
|---|---|---|
| 3370-0023 | Tracks for adjustable shelf and/or adjustable tray in single depth or rescue style single depth compartment. Location: [#LOC]. | 214 |
| 3370-0025 | Shelf permanent shelf. Locate in [#LOC]. | 112 |
| 3370-0026 | Adjustable shelf. For compartments that are full height/full depth or lower compartments with full depth. Location: [#LOC]. | 277 |
| 3370-0027 | Tracks for adjustable shelf and/or adjustable tray in the lower area of the compartment. Location: [#LOC]. | 109 |
| 3370-0034 | Shelf adj full transverse. Locate in [#LOC]. | 566 |
| 3370-0035 | Shelf adjustable 1/2 depth in transverse compartment. Locate in [#LOC]. | 452 |
| 3370-0036 | Shelf adjustable 250 lbs capacity. 2/3 deep in transverse compartment. Locate in [#LOC]. | 508 |
| 3370-0038 | Adjustable shelf. For lower area of compartments with multiple depths. Location: [#LOC]. | 277 |
| 3370-0040 | Adjustable shelf for single depth or rescue style single depth compartment. Location: [#LOC]. | 277 |
| 3370-0043 | Unistrut. All exterior compartments on rescue body will have Unistrut in each compartment unless inapplicable. | 1939 |
| 3370-0045 | Shelf adjustable. Locate: B1 above frame rails. | 452 |
| 3370-0048 | Adjustable shelf with 2" lips around entire shelf. For compartments that are full height/full depth or lower compartments with full depth. Location: [#LOC]. | 594 |
| 3370-0052 | Adjustable shelf (J-Style) for non-transverse compartments 16" or greater in depth. Location: [#LOC]. | 277 |
| 3370-0053 | Adjustable shelf (C-Style) for non-transverse compartments up to 15.99" in depth. Location: [#LOC]. | 141 |
| 3370-0054 | Tracks for adjustable shelf and/or adjustable tray in compartments 16" or greater in depth. Location: [#LOC]. | 214 |
| 3370-0058 | Permanent shelf. Locate in R4 20" off floor. | 112 |
| 3370-0059 | Shelf above the frame rails in B1 compartment. Shelf will have 2" lips all around. | 696 |
| 3370-0060 | Shelf 1/2 depth in transverse compartment with 2inch lips all around. Locate in [#LOC] | 696 |
| 3370-0061 | Shelf 2/3 deep in transverse compartment with 2 inch lips. Locate in [#LOC] | 753 |
| 3370-0117 | Transverse permanent shelf. Locate in L1/R1 approx 42" up from floor. | 222 |
| 3370-0118 | Permanent shelf. Locate in R4 24" off floor below vertical partition. | 123 |
| 3370-0129 | Shelf 1/2 depth in transverse compartment. Rear lip to be 4" high. Locate in [#LOC]. | 488 |
| 3370-0133 | Tracks shall be provided for use with adjustable shelves and/or trays. The tracks shall align for use of a shallow depth adjustable shelf(s) and/or adjustable tray(s). The tracks shall be ran from floor to ceiling to allow the shallow depth adjustable shelf/tray to have full compartment height adjustability. Position tracks within compartment for optimal adjustability. The tracks as installed from floor to ceiling may be impacted by other items located within the compartment; tracks may be cut and continued again as required to provide full height adjustability. The tracks shall be vertically mounted and attached to the side and/or rear walls of the compartments. Location: [#LOC]. | 214 |
| 3370-0134 | Permanent shelf to have 1" lips. Location: [#LOC]. | 126 |
| 3370-0137 | Compartment L4 and R5 shall have Unistrut within each compartment. | 557 |
| 3370-0141 | All interior walkway compartments on stainless steel walk-in rescue body will have Unistruts in each compartment unless inapplicable. | 1108 |
| 3370-0142 | Permanent shelf for Hurst power unit. Locate on forward bulkhead high as possible [#LOC]. | 767 |
| 3370-0144 | Permanent shelf bolt in suspended from ceiling and forward in compartment. Locate in [#LOC]. | 338 |
| 3370-0148 | TBD. | 277 |
| 3370-0149 | Adjustable shelf. For non-transverse compartments that are 16" or greater in depth. The shelf shall have a minimum 2" front rear and side lips. Location: [#LOC]. | 305 |
| 3370-0154 | Adjustable shelf with 2" lips around entire shelf. For compartments that are shallow up to 15.99" depth. Location: [#LOC]. | 262 |
| 3370-0158 | Tracks on rear wall of compartment for equipment mounting. Three (3) aluminum adjustable shelf tracks shall be vertical mounted on the rear wall of the L2 compartment over rear wheel. Tracks shall be located forward and rearward offset from compartment walls 4 inches in the compartment and one centered in the compartment. Tracks shall be for mounting customer equipement and shall not have any shelves included. | 178 |
| 3370-0159 | Adjustable shelf with inverted lips for mounting of SCBA bottle storage assembly. For compartments that are full height/full depth or lower compartments with full depth. Location: R3. | 277 |
| 3370-0161 | Stainless steel adjustable shelf. For non-transverse compartments that are 16" or greater in depth. Location: [#LOC]. | 332 |
| 3370-0162 | Stainless steel adjustable shelf. For non-transverse compartments that are up to 15.99" deep. Location: [#LOC]. | 170 |
| 3370-0167 | Mount two (2) pieces of shelf track horizontal from front to back on the back wall for attaching SCBA air bottle brackts to. Use old style adjustable track part # 273490. Locate [#LOC]. | 250 |

| Item No. | Description | |
|---|---|---|
| 3370-0171 | Compartment R2 to have an "L" shaped shelf bolted to the ceiling and front wall to support the (8) air bottle storage. | 358 |
| 3370-0172 | Adjustable shelf (J-Style) for non-transverse compartments 16 in. or greater in depth. Shelf to be partial depth and extend from back wall 18in. or as applicable per compartment depth options. Design to offset attach to standard location adjustable tracks and relief notch as needed to adjust at breaker box or similar compartment mounted options.. Location: [#LOC]. | 277 |
| 3370-0174 | Permanent shelf. Locate in R2 spaced above compartment floor to accommodate poly box access and storage above and below shelf. Front lip of shelf to be minimum required to secure boxs in place. Finish: sanded aluminum. | 191 |
| 3370-0177 | Fixed hanging shelf without front lip. For non-transverse compartments that are 16" or greater in depth. 30" wide x 5" high x 24" deep. Includes nylon buckle strap assembly vertically across the center of the opening. Location: R3 mounted rearward at the ceiling of the full depth compartment area. | 277 |
| 3370-0178 | Permanent shelf. Locate in L3 approximately 1/2 depth of compartment even with bottom of lower 3x3 extrusion at turntable access panel on back wall. | 101 |
| 3370-0179 | All adjustable and fixed shelves to be extended outboard towards door opening and inboard towards back wall as far as possible. Note outboard corners may require notching for compartment track lighting (if applicable). | 435 |
| 3370-0182 | Permanent shelf bolt in and full transverse mounted located above the upper transverse Speedlay assembly as low as the speedlay plumbing and tray will allow. | 338 |
| 3370-0183 | Shelf adjustable 250 lbs capacity with a notch to maximize compartment shape. A 2/3 deep adjustable shelf shall be provided in transverse compartment. Design to include a notch to clear body feature obstruction. Locate in [#LOC]. | 612 |
| 3370-0187 | Permanent shelf. Locate in R1. Locate the shelf to bottom of the rear suction cover box.. | 112 |
| 3370-0188 | All shelves adjustable and permanent to have 4" lips IPOS. | 454 |
| 3370-0189 | Adjustable shelf with inverted for mounting of adjustable trays due to the gear box cover for the ladder rack. For compartments that are full height/full depth or lower compartments with full depth. Location: L1. | 277 |
| 3370-0190 | Permanent shelf. Locate in Battery compartment. Height to be approximately 2" above chassis batteries. | 112 |
| 3370-0191 | Adjustable shelf (C-Style) tilted at 45 degrees (inboard edge tilted up) for mounting miscellaneous tools. Includes fixed mounted peg toolboard attached to shelf for tools to mount too. Toolboard to be spaced off shelf a half inch. Location: [#LOC]. | 494 |
| 3370-0192 | Permanent shelf bolt in and full transverse mounted located in L1/R1 just above breaker box. | 338 |
| 3370-0193 | Adjustable shelf (C-Style) for non-transverse compartments up to 15.99" in depth. Shelf to be half the width of the compartment. Location: [#LOC]. | 141 |
| 3370-0195 | Shelf. A permanent shelf shall be provided that includes a stop located to accommodate a stokes basket located close to the access door. Material: smooth aluminum with sanded finish. Locate: B2 high enough to accommodate stokes basket storage on top and provide for max available storage below for 4X4X8 foot cribbing. | 519 |
| 3370-0196 | Adjustable shelf for non-transverse compartment. Location: [#LOC]. | 277 |
| 3370-0198 | Permanent shelf. Locate in [#LOC]. | 112 |
| 3370-0199 | Vertically mounted tracks for adjustable shelves and/or trays for non-transverse compartment [#LOC]. | 214 |
| 3370-0202 | Adjustable shelf for non-transverse compartment. The shelf shall have inverted lips. Location: [#LOC]. | 277 |
| 3370-0203 | Shelf adjustable in transverse compartment. 26 inches deep. Locate: L1. | 431 |
| 3370-0204 | Shelf adjustable in transverse compartment. 26 inches deep. Locate: R2. | 431 |
| 3370-0205 | Shelf adjustable in transverse compartment. 26 inches deep. Locate: R3. | 431 |
| 3370-0206 | Permanent mounted shelf for non-transverse compartment. The shelf shall have inverted lips. Location: [#LOC]. | 277 |
| 3370-0208 | Unistrut to accommodate shelving shall be provided on both side of partition and inside compartment. Locate: R2 | 392 |
| 3370-0213 | Unistruit shall be provided in the specified compartment to accommodate future use by customer. Locate in [#LOC]. | 209 |
| 3370-0215 | Adjustable shelf (C-Style) for non-transverse compartments up to 15.99" in depth. For shelf tracks mounted on front and rear side compartment walls. Location: [#LOC]. | 282 |
| 3370-0216 | Permanent shelf 10" deep from rear wall of compartment. Locate in L1 and L2. | 112 |
| 3370-0218 | Adjustable shelf (J-Style) for non-transverse compartments 16" or greater in depth. Includes bolt-in floor inside shelf for a 4" raise at rear of shelf. Location: [#LOC]. | 398 |
| 3370-0219 | Shelf permanent shelf. Locate in [#LOC]. | 112 |
| 3380-0014 | Roll-out generator tray. Includes tray interlock. Locate [#LOC]. | 897 |

| Item No. | Description | |
|---|---|---|
| 3380-0015 | Fixed back wall mounted toolboard. Toolboard to be spaced off wall a half inch. Location(s): [#LOC]. | 249 |
| 3380-0017 | Floor mounted slide master roll-out/tilt down tray. Single depth. Mount on [#LOC] floor. | 1262 |
| 3380-0018 | Adjustable roll-out toolboard. Includes upper and lower adjustable track with 250 lbs. slides and gas shock actuated. Toolboard sized to compartment height and depth as applicable. Location(s): [#LOC]. | 928 |
| 3380-0022 | Floor mounted roll-out tray. Includes 500lbs. tray capacity. Location: [#LOC]. | 983 |
| 3380-0023 | Adjustable mounted roll-out/tilt-down tray. Location(s): [#LOC]. For use in single depth or rescue style compartments. | 1595 |
| 3380-0024 | Adjustable mounted roll-out tray. Includes 250 lbs tray capacity. Location(s): [#LOC] | 1082 |
| 3380-0025 | Adjustable mounted roll-out tray. Includes 500 lbs tray capacity. Location(s): [#LOC] | 1314 |
| 3380-0027 | Floor mounted SlideMaster with tray. Model SM3-SP. Single depth. Mount on [#LOC] floor. | 1011 |
| 3380-0028 | Adjustable mounted Slide Master with tray. Model SM3-SP. Single depth. Location(s): [#LOC] | 1340 |
| 3380-0029 | Floor mounted Bi-Directional Slide Master with tray. Model SM2-D-SP. Mounted on [#LOC]. | 1742 |
| 3380-0030 | Adjustable mounted bi-directional Slide Master with tray. Model SM2-D-SP. Mounted in transverse area of [#LOC]. | 2069 |
| 3380-0038 | Floor mounted roll-out tray with Jonathan Slides. Includes 400lbs. tray capacity. Mount on [#LOC] floor. | 1718 |
| 3380-0039 | Adjustable mounted roll-out tray with Jonathan Slides. Includes 400 lbs tray capacity. Location(s): [#LOC] | 2048 |
| 3380-0045 | Floor mounted Slide Master with tray. Model SM3-SP. 1/2 depth transverse or full depth on non transverse. Mount on [#LOC] floor. | 1318 |
| 3380-0046 | Adjustable mounted Slide Master with tray. Model SM3-SP. 1/2 depth in transverse compartments or full depth in upper B1. Mounted in transverse area or extended area of [#LOC]. | 1671 |
| 3380-0047 | Floor mounted Slide Master with tray. Model SM3-SP. 2/3rds deep. Mount on [#LOC] floor. | 1477 |
| 3380-0048 | Adjustable mounted Slide Master with tray. Model SM3-SP. 2/3rds deep. Mounted in transverse area of [#LOC]. | 1833 |
| 3380-0055 | Floor mounted roll-out/tilt down tray with aluminum frame. Mount on [#LOC] floor. | 1230 |
| 3380-0056 | Adjustable mounted roll-out/tilt down tray with aluminum frame. Location(s): [#LOC]. For use in single depth or rescue style compartments. | 1557 |
| 3380-0060 | Adjustable tool board with 500 lbs slides. Includes upper and lower adjustable track and gas shock actuated. Tool board sized to compartment height and depth as applicable. Location(s): [#LOC]. | 1275 |
| 3380-0061 | Compartment underbody. Includes drop down front door with D-ring latches. Locate [#LOC]. | 1724 |
| 3380-0062 | Adjustable peg tool board. Includes upper and lower adjustable track and gas shock actuated. Tool board sized to compartment height and depth as applicable. Location(s): [#LOC]. | 1114 |
| 3380-0063 | Ready Respond Storage cabinet. Includes (5) drawers with gray fronts. No side trim required. Locate floor mounted in [#LOC]. | 4564 |
| 3380-0068 | Floor mounted equally sized roll-out trays (PR). Includes 250lbs. tray capacity. Mount on [#LOC] floor. | 1502 |
| 3380-0074 | Tool board HD adjustable. Includes upper and lower adjustable track and is gas shock actuated return style re-enforcing bends on vertical front and rear edges of tool board upper and lower adjustable track and gas shock actuated. Tool board sized to compartment height and depth as applicable. Location(s): [#LOC] | 991 |
| 3380-0076 | Tray floor mounted roll-out with gas spring. 500 lbs. capacity. Location: [#LOC]. | 754 |
| 3380-0077 | Tray adjustable roll-out with 500 lbs. capacity and a gas shock. Location(s): [#LOC]. | 1082 |
| 3380-0078 | Compartment underbody with slide-out tray. Includes drop-down front door with push-button latch(es). [#LOC]. | 2133 |
| 3380-0079 | Adjustable heavy duty tool board with 500 lbs. capacity. Includes return style reinforcing bends on vertical front and rear edges of tool board upper and lower adjustable track and gas shock actuated. Tool board sized to compartment height and depth as applicable. Location(s): [#LOC]. | 991 |
| 3380-0080 | Adjustable heavy duty tool pegboard with 500 lbs. capacity. Includes return style reinforcing bends on vertical front and rear edges of tool board upper and lower adjustable track and gas shock actuated. Tool board sized to compartment height and depth as applicable. Location(s): [#LOC]. | 1178 |
| 3380-0081 | Roll-out generator tray. Includes tray interlock. Locate [#LOC]. | 897 |
| 3380-0082 | Slidemaster frame powder coated black (EA). Location: [#LOC]. | 136 |
| 3380-0083 | A divider will be installed from front to back in rollout tray. Locate both dividers in R1 tray one right against forward wall approx 18" high and second one 4" off of that one the same height and a third one 4" off of the second the same height.. | 222 |
| 3380-0087 | Adjustable toolboard with 500 lb. slides for use with deep compartments. Includes upper and lower adjustable track with lock in/lock out latch. Toolboard sized to compartment height and depth as applicable. Location(s): [#LOC]. | 1275 |
| 3380-0093 | Floor mounted roll-out/tilt down tray. Mount on [#LOC] floor. For use on half transverse trays. | 1262 |

| Item No. | Description | |
|---|---|---|
| 3380-0094 | Floor mounted roll-out/tilt down tray. Mount on [#LOC] floor. For use on two thirds transverse trays or in the B1above the frame rails. | 1262 |
| 3380-0095 | Adjustable mounted roll-out/tilt down tray. Location(s): [#LOC]. For use on 1/2 depth transverse trays or upper deep B1 compartment. | 1595 |
| 3380-0096 | Adjustable mounted roll-out/tilt down tray. Location(s): [#LOC]. For use on 2/3 deep transverse trays or B1above the frame rails. | 1595 |
| 3380-0098 | Floor mounted Slide Master with tray. Model SMEX w/ 120% extension. 1/2 depth transverse or full depth on non transverse. Mount on [#LOC] floor. | 1861 |
| 3380-0102 | Battery slide-out tray. Locate in [#LOC]. There will be a cover over the top of the batteries. | 1220 |
| 3380-0126 | Floor mounted bi-directional Slide Master with speed lay. Model SM2-D-SP. Mounted on [#LOC] transverse floor. Speed Lay will hold 200 feet of 1.75" DJ hose. | 1742 |
| 3380-0127 | Floor mounted Slide Master with tray. Model SM3-SP. Single depth. Mount on rearward R2 floor. The tray shall be approx 39" wide. | 1011 |
| 3380-0128 | Adjustable tool board. Includes upper and lower adjustable track and gas shock actuated. Tool board sized to compartment height and depth as applicable. Location(s): R2 approx 14" off the front wall. | 928 |
| 3380-0133 | On Scene Solutions floor mounted roll-out/tilt down tray mount on [#LOC] floor. This tray shall not exceed 30" in depth. | 1713 |
| 3380-0134 | On Scene Solutions adjustable mounted roll-out/tilt down tray mount in the [#LOC] compartment. This tray shall not exceed 30" in depth. | 2034 |
| 3380-0143 | Compartment underbody with slide-out tray. Includes front door with D-ring latch(es). Door will be attached to the tray. Locate [#LOC]. | 2461 |
| 3380-0144 | Floor mounted roll-out/tilt down tray. Mount on shelf above crosslay in L1. For use on half transverse trays. | 1262 |
| 3380-0145 | Suction tray iIncludes removable slats in bottom of tray. Tray to be 25" long. Location: in front of the pump panel in L2 forward. | 1179 |
| 3380-0150 | Fixed back wall mounted toolboard with swirled finish. Toolboard to be spaced off wall a half inch. Location(s): [#LOC]. | 409 |
| 3380-0156 | A pull-out work surface shall be located just below the offset in R3. | 897 |
| 3380-0157 | Floor mounted Slide Master with tray. Model SM3-SP. 1/2 depth transverse or full depth on non transverse. Mount on [#LOC] forward floor. Tray should be approx 38" wide. | 1318 |
| 3380-0158 | Floor mounted roll-out tray. Includes OnScene Solutions slide 81900 series. 500 lbs. tray capacity. Location: [#LOC]. | 2223 |
| 3380-0159 | Adjustable tool board with 500 lbs slides. Includes upper and lower adjustable track .75" x .75" aluminum angle welded to front edge and gas shock actuated. Tool board sized to compartment height and depth as applicable. Location(s): [#LOC]. | 991 |
| 3380-0168 | Floor mounted roll-out tray with 500 lbs. capacity. Locate in R1 offset forward. Tray to be half the width of compartment. | 754 |
| 3380-0169 | Adjustable roll-out tray with 500 lbs. capacity. Tray to have 6" lips. Location(s): [#LOC]. | 1394 |
| 3380-0177 | Prepare upper back walls of compartment L3 and L4 with studs for dealer to provide plywood (or whatever material) toolboard panels. Studs are to be threaded stainless steel. | 332 |
| 3380-0180 | (2) Hand hold slotted cut-outs shall be provided on rollout tray's front wall (one each side) for easier roll-out/roll-in. Rubber trim shall line the hand cut outs. Approximate size of cut-out to be 1-1/2" x 5". Locate on each tray in [#LOC]. | 45 |
| 3380-0190 | Vertical hinged swing-out tool board. Location: [#LOC]. Hinge along forward compartment wall and position halfway in from door opening. Includes single point D-ring latch to secure in the closed position that is accessible from the ground. | 1743 |
| 3380-0197 | Floor mounted roll-out/tilt down tray with aluminum frame. Mount on [#LOC] floor. Tray(s) to have 2" high sides all around IPO standard. | 1230 |
| 3380-0198 | Adjustable mounted roll-out/tilt down tray with aluminum frame. Location(s): [#LOC]. Tray(s) to have 2" high sides all around IPO standard. For use in single depth or rescue style compartments. | 1557 |
| 3380-0199 | Floor mounted bi-directional Slide Master with tray. Model SM2-D-SP. Includes fixed toolboard centered in tray lengthwise extending up as high as possible. Toolboard to be fabricated from 1.5" square aluminum tubing for frame and centered inside of frame shall be .250" smooth plate with bracing on each end for rigidity when tools are mounted. Tray/toolboard mounted on L1/R1 transverse floor. | 2697 |
| 3380-0201 | PAC TRAC panels vertical stacked with tool mounting grooves orientated horizontal on each side of swing-out tool board. Locate: [#LOC]. | 1799 |
| 3380-0202 | A heavy duty vertical divider approx 20" tall x tray length x 1/4 inch thick alum pegboard. The divider(s) shall be adjustable as located within the tray in: L1/R1. | 498 |
| 3380-0203 | Adjustable peg tool board. Includes upper and lower adjustable track and gas shock actuated. Tool board sized to compartment height and depth as applicable. Location(s): [#LOC]. | 1076 |

| Item No. | Description | |
|---|---|---|
| 3380-0204 | Floor mounted Slide Master with tray. Model SM3-LP (low profile). Single depth. Mount on [#LOC] floor. | 1079 |
| 3380-0206 | Adjustable peg tool board. Includes upper and lower adjustable track with lock in/lock out latch. Slides for use with deep compartments. Toolboard sized to compartment height and depth as applicable. Location(s): [#LOC]. | 1356 |
| 3380-0212 | Floor mounted rollout tray/toolboard with gas spring and 500 lbs. capacity. The vertical peg board tool board will be mounted on adjustable mount(s) on the floor of the roll out tray. Includes return style reinforcing bends on vertical front and rear edges of tool board. Tool board sized to compartment height and depth as applicable. Location: [#LOC]. | 1612 |
| 3380-0214 | Adjustable toolboard with SlideMaster SM3-MP 600 lb. slides for use with deep compartments. Includes upper and lower adjustable track with lock in/lock out latch. Toolboard sized to compartment height and depth as applicable. Location(s): [#LOC]. | 1313 |
| 3380-0215 | Adjustable mounted Slide Master with tray. Model SM3-HD 1000LB full depth in upper B1. Mounted in extended area of [#LOC]. | 2108 |
| 3380-0216 | Floor mounted Slide Master with tray. Model SM3-HD 1000LB full depth in upper B1. Mounted in extended area of [#LOC]. | 2015 |
| 3380-0217 | Respond Ready toolbox located in the R1 compartment. Toolbox includes (6) drawers with 500lb lock-out slides and (4) dividers per drawer. Drawer heights to be (1) 7" at the bottom & (5) 5" above. Includes standard top shelf Color: Black powder coated front panels and galvanized components. Dimensions of overall toolbox 34.5"H x 50"W x 22.7"D. | 5637 |
| 3380-0220 | Floor mounted roll-out/tilt down and adjustable mounted roll-out/tilt down trays with aluminum frame. Trays to have 2" high sides all around IPO standard. Mount in [#LOC] compartment. | 2786 |
| 3380-0222 | Floor mounted roll-out inverted tray with 500 lbs. capacity. Location: [#LOC]. | 754 |
| 3380-0224 | Floor mounted roll-out tray with gas spring. 500 lbs. capacity. Tray shall be made of 1/4" smooth aluminum. Location: [#LOC]. | 999 |
| 3380-0225 | Floor mounted Slide Master with tray. Model SMEX w/ 120% extension. 2/3rds deep. Includes fixed toolboard centered in tray lengthwise extending up as high as possible. Toolboard to be fabricated from 1.5" square aluminum tubing for frame and centered inside of frame shall be .250" smooth plate with bracing on each end for rigidity when tools are mounted. Tray/toolboard mounted on [#LOC] floor. | 2697 |
| 3380-0229 | Adjustable toolboard partition. With unistrut track mounted to inside of rollout tray on floor for toolboard to adjust side to side. Toolboard to be fabricated from 1.5" square aluminum tubing for frame and centered inside of frame shall be .250" smooth plate with bracing on each end for rigidity when tools are mounted. Locate in [#LOC] floor mounted roll-out tray. | 585 |
| 3380-0230 | Compartment underbody. Includes drop down front door with push-button latches. Locate: Span below R1 and R2. | 1613 |
| 3380-0232 | Tray for tool board. There will be a total of (4) trays welded to both side of the toolboard's. Location: L1(1) tray on each side of toolboard as low as possible. The trays will be fabricated of 3/16" aluminum and approx 6" tall x 6" deep x 24" long. Finish shall be sanded aluminum. | 977 |
| 3380-0233 | Adjustable roll-out tray with 500 lbs. capacity. Tray to have raised forward lip with hole(s) to accommodate mounting of captive rollers for optioned reels in compartment. Tray at full extension shall position rollers outward to provide additional protection from hoses chafing or damaging painted surfaces: [#LOC]. | 1471 |
| 3380-0234 | Weld a heavy duty gusseted vertical divider 40 inches tall centered in tray: 1/4 inch thick aluminum and full depth of tray. Option to accommodate mounting of hydraulic tools. Location: R4 in floor mounted tray aft of partition. | 747 |
| 3380-0235 | Weld a heavy duty gusseted vertical divider 40 inches tall centered in tray: 1/4 inch thick aluminum and full depth of tray. Option to accommodate mounting of hydraulic tools. Location: L4 in floor mounted tray aft of partition. | 747 |
| 3380-0237 | Compartment underbody 30" wide. Includes drop down front door with push-button latches. The storage compartment shall hold approximately 50` of 3" DJ hose. Locate [#LOC}. | 1386 |
| 3380-0240 | Floor mounted stainless steel roll-out tray. Includes OnScene Solutions slide 81900 series. 500 lbs. tray capacity. Location: [#LOC]. | 2254 |
| 3380-0243 | Adjustable roll-out tray. Includes 500lbs. tray capacity. Location: L3 compartment. The tray to be maximum of 20" deep x standard compartment width size. Use 20" long slides due to the enhanced extended compartmentation. | 1082 |
| 3380-0247 | Floor mounted roll-out tray 48" wide sized for portable pump. Includes 500lbs tray capacity. Location: R1 offset forward. | 983 |
| 3380-0248 | Vertical hinged swing-out tool board adjustable in and out. Location: [#LOC]. Hinge along forward compartment wall. Includes single point D-ring latch to secure in the closed position that is accessible from the ground. | 1801 |

| Item No. | Description | |
|---|---|---|
| 3380-0249 | Compartment underbody. Includes drop down front door with push-button latches. To hold approximately 25' of 5" LDH hose in each underbody compartment. Locate below L1/R1. | 1386 |
| 3380-0250 | Floor mounted Slide Master with tray. Notched. Model SM3-SP. 2/3rds deep. Notch rear forward corner to accommodate vertical exhaust to maximize utility. Finish to be sanded aluminum unless otherwise specified. Locate: L1 extended floor. | 1676 |
| 3380-0253 | Adjustable aluminum peg toolboard with SlideMaster SM3-MP 600 lb. slides for use with deep compartments. Includes upper and lower adjustable track with lock in/lock out latch. Toolboard sized to compartment height and depth as applicable. Location(s): R1 | 1448 |
| 3380-0256 | Compartment with provision for 2 SCBA Bottle storage. Includes drop-down door with D-ring latch. Compartment to be located [#LOC]. | 710 |
| 3380-0261 | Roll-out generator tray. Includes tray interlock. Locate R3. 23 x 18 x 3 spaced from forward wall 8 inches. | 897 |
| 3380-0263 | Floor mounted SlideMaster with tray and a vertical tool board centered in tray to accommodate horizontaly mounting (4) tri-pod lights (2) to each side "Make and Model Pioneer 110V with dual light heads. SlidMaster Model SM3-HD. Mount on top of 5 inch tall channel to accommodate storage of cribbing below. Finish is sanded aluminum. Locate: B1 on top of extended floor. | 3251 |
| 3380-0265 | Tray floor mounted roll-out with gas spring. 500 lbs. capacity. The front and rear lips shall be 1.5" high. Location: [#LOC]. | 754 |
| 3380-0266 | Vertical hinged swing-out Pegboard tool board. Location: R2. Hinge along forward compartment wall and position halfway in from door opening. Includes single point D-ring latch to secure in the closed position that is accessible from the ground. | 1888 |
| 3380-0267 | Compartment underbody 66" wide with slide-out tray. Includes front door with D-ring latch(es). Door will be attached to the tray. Locate centerd below L1/L2. | 2461 |
| 3380-0268 | Tray / toolboard combination floor mounted roll-out with gas spring. 500 lbs. capacity. The tray portion to be rearward. L1 rearward of CAFS unit. | 1709 |
| 3380-0269 | Tray floor mounted Slide Master with tray to accommodate Ferno model 71 basket with RIT equipment. Model SM3-HD. Locate: B1 extended floor. | 2229 |
| 3380-0273 | Fixed back wall mounted toolboard. Toolboard to be spaced off wall a half inch. Location(s): L1 lower on forward rearward and back walls. Note toolboard fixed to back wall will be removable due to jack access. | 249 |
| 3380-0279 | Floor mounted SlideMaster tray with aluminum frame. Model M3. Single depth. Mount on [#LOC] floor. | 1343 |
| 3380-0282 | All floor mounted and adjustable tray(s) to have 4" high sides all around IPO standard. | 454 |
| 3380-0283 | Tool board. A heavy duty 1/4" thick aluminum gusseted vertical tool board approx 48" tall x tray length shall be provided to accommodate stowing (4) Res Q Jacks: (2) RJ3 Lift Stands and (2) RJ3 Stabilization and Lifting Struts. The tool board shall be welded inside a floor tray (Tray not included and selected seperatly) and stow jacks vertically next to each other. Jacks to be held in place with straps for fast access. Finish shall be sanded aluminum unless otherwise specified. Locate: R4. | 2136 |
| 3380-0286 | Divider / Tool Board. Weld a heavy duty gusseted vertical divider as tall as height allows and centered inside tray. Material to be 1/4 inch thick aluminum and full depth of tray. Locate: [#LOC]. | 747 |
| 3380-0287 | Tray for tool board. There will be a tray bolted to bottom of toolboard. The tray will be fabricated of smooth aluminum. Tray size to be 4 inches tall x 16 inches wide x depth of toolboard. Tray shall include a gusset for added support at each end. Finish shall be sanded aluminum. Locate: L1 low as possible on forward surface. | 284 |
| 3380-0288 | Adjustable mounted Slide Master with tray. Model SM3-SP. 30 inch depth. Tray shall be 30 inches deep front to rear. Locate: B1 upper area over frame rail and as close to compartment back wall as possible. Tray when at 100% extension shall partially extend outside of compartment approx 8 inches. | 1671 |
| 3380-0292 | Tray floor mounted roll-out with gas spring. 500 lbs. capacity. For use with half transverse tray. Tray travel will be limited to 26 inches of extension. Location: [#LOC]. | 754 |
| 3380-0293 | Floor mounted bi-directional Slide Master with tray. Aluminum Model M2D. Mounted on [#LOC]. | 2080 |
| 3380-0294 | Crosby Style compartment underbody with slide-out tray. Includes front door with D-ring latch(es). Door will be attached to the tray. Locate [#LOC]. | 2461 |
| 3380-0295 | Adjustable mounted bi-directional Slide Master toolboard. Mounted in transverse area of L2/R2. | 2496 |
| 3380-0296 | Tray floor mounted roll-out with mechanical rotary latch system. 500 lbs. capacity. Location: [#LOC]. | 754 |
| 3380-0298 | There shall be a smooth plate aluminum cover over the top of the batteries and the side(s). The cover shall act as a shelf to allow storage of equipment on top of the batteries while also acting as a divider to seperate the equipment stored along side the batteries. | 453 |
| 3380-0300 | Tray SlideMaster Mount on top of angle welded to compartment side wall to accommodate cribbing storage below. Locate: B1. | 2157 |

| Item No. | Description | |
|---|---|---|
| 3380-0302 | Adjustable heavy duty tool board with 500 lb capacity. Includes return style reinforcing bends on vertical front and rear edges of tool board upper and lower adjustable track and gas shock actuated. Tool board sized to compartment height and depth as applicable. Upper end to be notched around compartment offset to provide maximum height. Relocate upper slide as applicable for maximum extension of toolboard. Location(s): [#LOC]. | 1062 |
| 3380-0304 | Tray floor mounted roll-out with gas spring. 500 lbs. capacity. Location: L1 Tray to include a center vertical mounted peg board divider to extend 26in. above the top of the tray lip into open area above in compartment. Peg board will be centered in tray and positioned to utilize peg board storage on the forward and rearward sides of the board as mounted. Peg board to be utilized for fitting and tool storage. | 972 |
| 3380-0305 | Adjustable aluminum peg toolboard or use with transverse compartments. Includes lower adjustable tracks providing minimum 6" side to side adjustability . Toolboard sized to compartment height and depth as applicable. Includes gusseted supports on both ends. Location(s): L2/R2 transverse area offset forward. | 1182 |
| 3380-0307 | SlideMaster generator roll-out tray with interlock. Model SM3-SP. Single depth. Mount on [#LOC] floor. | 1176 |
| 3380-0313 | Divider. Provide a bolt in heavy duty vertical divider with gussets at each end. Divider to be 1/4 inch thick aluminum 27 inches tall x 32 inches deep & upper corners of divider to have a 4 inch radious. Option to accommodate mounting of (4) four universal air pack brackets (2) each side of divider. Location: R3 centered in floor mounted tray. | 747 |
| 3380-0317 | Tray adjustable roll-out with 500 lbs. capacity and a gas shock. There shall be 3" clearance between the back of the tray and all mounting hardware to the back wall of compartment. Location(s): L3. | 1082 |
| 3380-0318 | Floor mounted Slide Master with flat plate. Model SM3-MP (Mid profile) with 300 Lb capacity. For use with deep compartments. Located upper pump module compartment. | 1313 |
| 3380-0322 | Floor mounted roll-out tray. Includes 500lbs. tray capacity. No lip on tray. Location: L3. | 983 |
| 3380-0323 | Tool peg board bolt in inverted V shape. A bolt in tool peg board in the shape the letter V inverted shall be provided. The tool board shall be sized to best accommodate a 10 in. tall x 10 in. wide tripod sleeve in the middle and provide a stop at 90 in. deep. The tool board shall be sized in height and depth as applicable. Material is 1/4 inch smooth aluminum peg board. Finish is sanded aluminum. Locate:centered in B1 tray. | 1875 |
| 3380-0324 | Floor mounted Slide Master with tray. Model SM3-HD. Locate: B1 extended floor. Option to provide up to 108" extension of B1 at extended floor level. | 2408 |
| 3380-0325 | Roll-out generator style tray (no interlock). 18 inches wide. Locate: R4 on floor aft of partition. | 1023 |
| 3380-0327 | Adjustable mounted Hansen roll-out/tilt-down tray. Location(s): R2. For use in single depth or rescue style compartments. | 1595 |
| 3380-0328 | Adjustable heavy duty two sided peg board roll-out aluminum tool board with hidden gas shock . Includes return style re-enforcing bends on vertical front and rear edges of tool board with boxed in design upper and lower adjustable track and gas shock actuated. Tool board sized to compartment height and depth as applicable. Location(s): [#LOC] | 1178 |
| 3380-0329 | Adjustable heavy duty two sided tool board with 500 lbs. capacity. Includes return style reinforcing bends on vertical front and rear edges of tool board and boxed in design upper and lower adjustable track and gas shock actuated. Tool board sized to compartment height and depth as applicable. Location(s): [#LOC]. | 991 |
| 3380-0331 | Floor mounted Slide Master with tray. Model SM3-SP. 1/2 depth transverse or full depth on non transverse. Tray side walls to be 6 inches tall. Design includes (4) four 2 inch diameter holes equally spaced each side wall of tray for hold down strap attachment. Mount on [#LOC] floor. | 1583 |
| 3380-0332 | Floor mounted Slide Master with tray. Model SM3-SP. Tray to be 33 in wide x 33 in deep. Locate: B1 floor | 1318 |
| 3380-0338 | Adjustable mounted Hansen roll-out/tilt-down tray. Location(s): R1. For use in single depth or rescue style compartments. | 1595 |
| 3380-0347 | Vertical hinged swing-out tool board adjustable in and out. Location: [#LOC]. Hinge along rearward compartment wall. Includes single point D-ring latch to secure in the closed position that is accessible from the ground. | 1801 |
| 3380-0351 | Toolboard adjustable with 500 lb. slides for use with deep compartments. Includes upper and lower adjustable track with lock in/lock out latch. Toolboard sized to compartment height and depth to be 2/3 of transverse compartment. Location: R1 | 1275 |
| 3380-0352 | Toolboard adjustable with 500 lb. slides for use with deep compartments. Includes upper and lower adjustable track with lock in/lock out latch. Toolboard sized to compartment height and depth to be 2/3 of transverse compartment. Location: L3 | 1275 |

| Item No. | Description | |
|---|---|---|
| 3380-0353 | Tray tool board. There shall be a tray bolted to bottom edge of tool board. The tray will be fabricated of smooth aluminum. Tray size to be 2 inches tall x 10 inches wide x depth of tool board. Tray shall include a gusset at each end for added support as required. Finish shall be sanded aluminum. Locate: L3 low as possible on tool board per customer drawing. | 284 |
| 3380-0354 | Tray roll-out adjustable 500lb capacity. Provide a 1/2 depth adjustable tray with lock in/lock out latch. Note: Tray slide range is limited to 36 inches. Locate: L2. | 1458 |
| 3380-0355 | Tray roll-out adjustable 500lb capacity. Provide a full deepth adjustable tray with lock in/lock out latch. Note: Tray slide range is limited to 36 inches. Locate: B1. | 1458 |
| 3380-0360 | Tray modification to the slide-out tray in R3 compartment. The side of tray that is at R3 opening to hinge down and lock with a pin on each end in the upright position. | 226 |
| 3380-0361 | Adjustable heavy duty tool pegboard with 500 lbs. capacity. Includes return style reinforcing bends on vertical front and rear edges of tool board upper and lower adjustable track and gas shock actuated. Tool board sized to compartment height and depth as applicable. Upper end to be notched around compartment offset to provide maximum height. Relocate upper slide as applicable for maximum extension of toolboard. Location(s): [#LOC]. | 1249 |
| 3380-0362 | Adjustable mounted Hansen roll-out/tilt-down tray. Location(s): [#LOC] For use in single depth or rescue style compartments. | 1595 |
| 3380-0364 | Adjustable roll-out tray with 500 lbs. capacity. Tray to have 4" lips. Location(s): [#LOC]. | 1394 |
| 3380-0366 | Vertical hinged swing-out Pegboard tool board adjustable in and out. Location: R3. Hinge along rearward compartment wall. Includes single point D-ring latch to secure in the closed position that is accessible from the ground. | 1888 |
| 3380-0371 | Divider tray. Weld a heavy duty gusseted vertical divider 40 inches tall and full depth of tray. Material: 1/4 inch thick aluminum with sanded finish. Option to accommodate mounting of (2) two Rescue 42 struts tools. Location: L4 floor mounted tray off set to front. | 747 |
| 3380-0372 | Divider tray. Weld a heavy duty gusseted vertical divider 40 inches tall and full depth of tray. Material: 1/4 inch thick aluminum with sanded finish. Option to accommodate mounting of (2) two Rescue 42 struts tools. Location: R4 floor mounted tray offset to front. | 747 |
| 3380-0377 | Adjustable heavy duty two sided tool board rated at 500 lbs. capacity with dual side pockets. Includes return style reinforcing bends on vertical front and rear edges of tool board and boxed in design upper and lower adjustable track and gas shock actuated. Shall be equipped with (2) pockets (1) one mounted to bottom on forward facing surface approx. 10" x 10" by as long as tool board will allow and (1) one mounted to bottom rearward facing surface approx. 5" x 10" by as long as tool board will allow. Tool board sized to compartment height and depth as applicable. Location: L5 compartment. | 1412 |
| 3380-0379 | Floor mounted Bi-Directional Slide Master with tray. Model SM2-D-SP. Mounted inside cab medical cabinet. The tray shall be made as wide as possible. Options like rear wall cab heaters etc will reduce the width of the tray. | 2080 |
| 3380-0381 | Tool board(s) to have a hand hold cutout on each outboard edge. | 286 |
| 3380-0382 | Floor mounted Slide Master with tray. Model SM3-SP. 1/2 depth tray sized to accommodate (24) ZICO plastic SCBA storage tubes stacked 4 tall x 6 deep. Tray lip facing forward in body to be notch to access SCBA bottles stowed in ZICO rack on floor of tray. Locate: L2. | 1405 |
| 3380-0383 | Tray floor mounted roll-out with gas spring and "Hansen" slides. 500 lbs. capacity. Location: [#LOC]. | 1218 |
| 3380-0384 | Tray with 6" sides floor mounted roll-out with gas spring and "Hansen" slides. 500 lbs. capacity. Location: [#LOC]. | 1345 |
| 3380-0385 | Adjustable mounted roll-out tray with gas spring and "Hansen" slides. 500 lbs tray capacity. Location(s): [#LOC] | 1779 |
| 3380-0387 | Tray tool board. There shalll be three (3) trays equal size bolted to bottom edge of toolboards. The tray will be fabricated of smooth aluminum. Tray size to be 3 inches tall x 7 inches wide x depth of toolboard. Finish shall be sanded aluminum. Locate: L2 low as possible on tool board per customer drawing. | 852 |
| 3380-0389 | Divider for roll out tray. Provide a three (3) sided vertical divider insert 20 inches tall X full depth of tray. Includes (1) additional divider between the sides located 8 inches from forward side divider wall. Upper outer corners to have a 4 inch radius. Finish to be sanded aluminum unless other wise specified. Locate: R1 welded inside floor mounted tray. | 395 |
| 3380-0393 | Adjustable heavy duty two sided tool board with 500 lbs. capacity. Includes return style reinforcing bends on vertical front and rear edges of tool board and boxed in design upper and lower adjustable track and gas shock actuated. Tool board sized to compartment height and depth as applicable. Upper end to be notched around compartment offset to provide maximum height. Location(s): [#LOC]. | 1117 |
| 3390-0106 | Dry lay in L1 next to crosslay. Dry lay will be approx. 45" deep and 18" high to hold a single stack of 50' of 3" DJ hose. | 250 |

| Item No. | Description | |
|---|---|---|
| 3390-0107 | Compartment [#LOC] to have the following: (1) permanent shelf located at compartment break with (1) vertical partition located 12" off rearward wall mounted to bottom of permanent shelf. The following located forward of the partition: (1) floor mntd roll-out tray w/250lb slds (1) adj roll-out tray w/250lb slds and (1) adjustable shelf. Rearward of partition: (2) adjustable tool boards. | 4258 |
| 3390-0118 | Bolt-in partition wall. Locate 26" back from outside R-3 door opening. Partition will run from the front of truck to rear of truck dividing R-3 from L-3. | 373 |
| 3390-0123 | Partition bolt-in partition wall. Locate 26" back from inside of extrusion of [#LOC] door opening. Partition will run from the front of truck to rear of truck dividing officerside from drivers side of transverse area. | 373 |
| 3390-0149 | Bolt-in partition wall. Locate in L1 lower 18" off forward wall. | 250 |
| 3390-0163 | There will be a backboard stokes and air bag storage located in the transverse area of L1 and R1 rearward. Module shall have a vertical backboard storage rearward (3"x19") an open top horizontal stokes basket storage on top (8"x25") a horizontal backboard storage second section down (3"x25") two air bag storage driver's side (third section down 3.5"x25" and bottom 3.5"x33") two air bag storage officer's side (both third and bottom section 3.5"x26"). | 2127 |
| 3390-0182 | L1 compt. PKG Package shall consist of two 500lb floor mounted rollout trays trays floor mounted side by side. (1) beside the DEF tank ahead of the electrical box and the second will be rear of the first tray in front of the electrical box. There shall be a permanent shelf a the offset. A swing out aluminum tool board(s) shall be provided for compartment(s) L1. The tool board shall be constructed of 1/4" (.25") smooth aluminum plate with a Zolatone finish peg board style and be sized in height and depth as applicable. The tool board shall be mounted with two large pin hinge points attached to a 3" x 3" extrusion that will permit the board to swing out of the compartment for easier access to tools and/or equipment. The tool board shall latch to a 3" x 3" extrusion with a latch utilized to secure the toolboard in the closed position. | 3459 |
| 3390-0183 | R1 compartment Package. R1 will consist of 2 adjustable full height dividers and an adjustable closet type rod. Rod should be able to be adjusted from the top of the divider down 12" from roll-up door. Dividers will have unistrut both top and bottom for adjustment and have a notch in the center so the rod can be adjusted up or down. Rod will be adjustable using brackets on each end and Unistrut attached to the compartment walls. | 833 |
| 3390-0184 | A pair of bolt-in partition wall will be installed. Locate one each in the rear interior compartments next to the reels. | 497 |
| 3390-0219 | Adjustable partition wall. Locate 2 each in roof top compartments. With unistrut track. | 250 |
| 3390-0245 | Bolt-in partition wall. Locate 47.125 inches back from door opening running front of truck to rear of truck dividing R1 from L1. | 373 |
| 3390-0246 | Bolt-in partition wall. Locate approximately 47.125 inches back from door opening running front of truck to rear of truck dividing R2 from L2. | 373 |
| 3390-0247 | Bolt-in partition wall. Locate approximately 47.125 inches back from door opening running front of truck to rear of truck dividing R3 from L3. | 373 |
| 3390-0278 | Compartment [#LOC] to have the following storage package: (1) vertical partition approximately 12" off rearward wall and the following located forward of the partition: (2) adjustable roll out heavy duty tool boards w/500lb slides . Rearward of partition: (3) adjustable shelves. | 3141 |
| 3390-0279 | Compartment [#LOC] to have the following storage package: (1) vertical partition rearward of cord reel and the following located rearward of partition: (1) adjustable shelf. | 739 |
| 3390-0280 | Storage system for compartment [#LOC]. Includes vertical partition offset 20" from rearward wall (2) adj. HD tool boards to rear of partition. (1) Adjustable rollout tray (1) floor mounted rollout tray and (1) adjustable shelf (notched for clearance as required in the upper storage location) all ahead of partition. | 4472 |
| 3390-0284 | Roof compartment divider. Locate 1 bolt in divider in driver side forward roof top compartment. Divider to span front to rear and locate to secure a Stokes basket close to side of compartment stowed on its side. | 345 |
| 3390-0285 | Bolt-in partition wall. Locate 47.125 inches back from door opening running front of truck to rear of truck dividing L2 from R2. | 373 |
| 3390-0286 | Compartment [#LOC] to have the following storage package: (1) vertical partition approximately 20" off rearward wall and the following located forward of the partition: (1) floor mounted roll out tray w/ 500lb slides and (2) adjustable roll-out tray w/500lb slides (1) upper and (1) lower. Rearward of partition: (2) adjustable roll out heavy duty tool boards w/500lb slides. | 4706 |
| 3390-0290 | Compartment [#LOC] to have the following storage package: (1) vertical partition 15" off rearward wall and the following located forward of the partition: (1) 2"x2" angle floor mounted to outside edge and (1) permanent shelf just below breaker box. Rearward of partition: (1) adjustable heavy duty tool boards. | 1490 |
| 3390-0291 | Compartment [#LOC] to have the following storage package in the lower full depth area: (1) vertical partition 15" off forward wall and the following located forward of the partition: (1) adjustable heavy duty toolboard. Rearward of partition: (1) adjustable shelf. | 1664 |

| Item No. | Description | |
|---|---|---|
| 3390-0299 | Bolt-in partition shelf. Locate in [#LOC]. | 250 |
| 3390-0320 | Storage system for compartment [#LOC]. Includes vertical partition 24" from left side wall (2) adj. HD tool peg boards rearward of partition and (2) adjustable shelves ahead of partition. Aerial application. | 3160 |
| 3390-0324 | Compartment L3 to have the following storage package: (1) vertical partition 16" off forward wall and the following located forward of the partition: (1) adjustable heavy duty tool board. Rearward of partition: (2) adjustable aluminum roll-out trays. | 3899 |
| 3390-0332 | An adjustable partition wall will be locate in L1. This will include both top and bottom adjustable tracks. | 738 |
| 3390-0348 | Bolt-in partition wall to be peg-board. Locate: L1 | 437 |
| 3390-0350 | Compartment [#LOC] to have the following storage package: (1) vertical partition 17" off rearward wall and the following located forward of the partition: (1) 2"x2" angle floor mounted to outside edge and (1) permanent shelf just below breaker box. Rearward of partition: (1) adjustable heavy duty tool boards. | 1490 |
| 3390-0393 | Two (2) 16" high adjustable partitions located in L1 compartment with unistrut track. Adjustable track to run side to side. | 416 |
| 3390-0412 | Divider roof top compartment. A bolt in roof top compartment divider shall be provided that spans side to side. The divider shall be 1/8 in. thick smooth aluminum with a sanded finish unless otherwise specified. Locate: Roof top compartment forward on driver side aft of cord reel. | 235 |
| 3390-0413 | Divider roof top compartment. A bolt in roof top compartment divider shall be provided that spans side to side. The divider shall be 3/16 in. thick smooth aluminum with a sanded finish unless otherwise specified. Locate: Roof top compartment forward on officer side aft of cord reel. | 235 |
| 3390-0417 | Compartment L3 lower shall have a .188 smooth plate aluminum hose storage container with aluminum divider sized to fit (1) 25` section of 5.00" LDH hose and (1) 50` section of 5.00" LDH hose. Module to include drainage and drop in composite flooring for ventilation. Both rolls stored on end for easy deployment. Module to be offset forward. | 549 |
| 3390-0454 | Bolt-in partition wall. Locate in [#LOC] 12" off forward wall. | 250 |
| 3390-0457 | Storage system for compartment L2. Includes vertical partition 26" from rearward wall (2) adj. HD tool boards to rear of partition and (2) adjustable shelves ahead of partition. Aerial application. | 2998 |
| 3390-0474 | Bolt-in partition wall. Locate in R1 fixed height at approx. 2" above chassis batteries or to bottom of Permenent Horizontal Shelf. | 250 |
| 3390-0478 | Two (2) adjustable partition walls will be located in R2. This will include both top and bottom adjustable tracks. | 771 |
| 3390-0479 | Compartment R3 to have the following storage package to compliment selected additional components: One (1) fixed shelf located approx. 15in. below the compartment opening. One (1) bolt in partition wall just forward of two arm ladder rack components in the compartment from the compartment floor to the fixed shelf as located. Selected adjustable shelving with tracks and floor mounted roll out tray shall be located forward of this partition to be remaining width of the compartment to forward wall as applicable. | 361 |
| 3390-0480 | Compartment R1 to have the following storage package: One (1) fixed shelf located in upper area of the compartment at the bottom of the compartment break. One (1) bolt in partition to be located 13in. forward of the rear compartment wall to extend from the compartment floor to the fixed shelf above. Located rearward of the partition: One(1) adjustable shelf with tracks Forward of the partition shall be Two (2) heavy duty adjustable roll out tool boards with a storage box made of .125 aluminum smooth plate sanded material mounted to the lower rearward side of the rear tool board which shall be 10in wide x 10in. tall and extend full available depth into the compartment on the tool board as mounted. | 2970 |
| 3390-0481 | Bolt-in partition wall. Locate in L3 centered to extend from the floor up 25 inches to below the lowest adjustable shelf as located. Partition to be full depth of compartment as located. | 250 |
| 3390-0482 | Compartment L3 to have the following storage package: One (1) fixed shelf at the lower compartment break in upper area of the compartment. Two (2) adjustable shelves with adjustable tracks mounted with the lower shelf just above the 25 inch partition also optioned into L3 lower compartment area. The adjustable shelves shall have 1.25 inch outward lips for use with poly storage boxes. Compartment package shall include 5 poly storage boxes with hand holes on each end. | 1048 |
| 3390-0484 | Storage system for compartment [#LOC]. Includes vertical partition offset 24" from rearward wall (2) adj. HD tool boards to rear of partition. (1) floor mounted rollout tray and ahead of partition. | 3374 |
| 3390-0486 | Divider floor / shelf removable (Pair). A removable floor plate shall be provided to maximize storage inside roof box and provide acces to DOT cascade bottle valves. Locate: Inside forward roof top compartments. | 1073 |

| Item No. | Description | |
|---|---|---|
| 3390-0487 | Compartment R1 to have the following storage package: One (1) bolt in partition to be located 13in. forward of the rear compartment wall to extend from the compartment floor to the compartment break above. Located rearward of the partition: One(1) adjustable shelf with tracks Forward of the partition shall be Three (3) heavy duty adjustable roll out tool boards with a storage box made of .125 aluminum smooth plate sanded material mounted to the lower rearward side of the rear tool board which shall be 10in wide x 10in. tall and extend full available depth into the compartment on the tool board as mounted. | 3849 |
| 3390-0497 | Compartment L1 to have the following storage package: (1) Partition located 12in off forward wall. Rearward of the partition: (1) fixed shelf 24in above the compartment floor with an additional vertical partition under the fixed shelf 10in rearward of the first partition. Above the fixed shelf: (2) two adjustable shelves with tracks. Forward of the partition: (1) fixed shelf 24in above the compartment floor in line with rearward shelf. | 1437 |
| 3390-0498 | Compartment L3 to have the following storage package: (1) Permanent mounted shelf 12.25in. off the compartment floor to extend from forward wall back to the end of the storage rack locaed below and the following located above the shelf: (3) three adjustable shelves with tracks. Below the permanent shelf: (1) Fire extinguisher storage rack positioned rearward in compartment to hold (3) extinguishers in a single horizontal row using trough style holders. Bottom and sides to include ribbed rubber inserts. Each opening to have a vertical mounted strap to secure contents. | 1914 |
| 3390-0503 | An adjustable partition wall(s) will be locate in [#LOC]. This will include both top and bottom adjustable tracks. | 738 |
| 3390-0506 | Fixed stainless steel partition wall. Locate in the roof top compartment above R4 forward of the cord reel. | 255 |
| 3390-0507 | Bolt-in partition wall to be peg-board. Locate: L3 | 437 |
| 3390-0508 | Fixed stainless steel partition wall. Locate in the roof top compartment above L3 rearward of the cord reel. | 255 |
| 3390-0509 | Bolt-in vertical peg board style partition wall. Locate in [#LOC]. | 250 |
| 3390-0511 | Divider roof top compartment. A bolt in roof top compartment divider shall be provided that spans side to side. The divider shall be 1/8 in. thick smooth aluminum with a sanded finish unless otherwise specified. Locate: Roof top compartment centered front to rear. | 235 |
| 3390-0512 | Partition transverse. A transverse bolt-in vertical partition wall shall be provided. Locate in [#LOC]. | 575 |
| 3390-0513 | Divider roof top compartment. (1) bolt in divider shall be provided. Locate: as indicated on customer drawing. Qty is each. | 345 |
| 3390-0515 | Compartment L2 to have the following storage package: (1) vertical partition 20" off forward wall and the following located forward of the partition: (1) floor mntd roll-out tray w/500lb slds and (2) adjustable shelves. Rearward of partition: (2) adjustable heavy duty tool boards and (2) floor mounted rool-out tray w/500lb slds. An adjustable tool board shall be mounted in each of the roolout trays with adjustable track on the front and back lip of the tray and the top of the toolboard. The toolboard shall roll in/out with the tray. | 4851 |
| 3390-0517 | Fixed stainless steel partition wall. Locate in the roof top compartment above R1 rearward of the hydraulic reel. | 255 |
| **PUMP AND PLUMBING** | | |
| 4005-0165 | Waterous CPK2 250GPM PTO pump. | 11179 |
| 4005-0185 | Hale CBP 250 GPM PTO pump. | 11603 |
| 4005-0190 | Darley 1.5 AGH single stage hydraulically driven centrifugal pump. | 13705 |
| 4010-0080 | 300 Gallon R Poly Water Tank | 5718 |
| 4010-0082 | 300 Gallon "R" Water Tank. Tank capacity is 300 US gallons. | 5145 |
| 4010-0122 | 500 Gallon R Water Tank Note: Any foam cell(s) will reduce the overall water capacity. Locate rear of L1/R1 center of the truck. This will delete the transverse area in L2/R2 and L3/R3. | 7332 |
| 4010-0219 | 200 Gallon "R" Water Tank UPF Poly III color fill towers. Note: Any foam cell(s) will reduce the overall water capacity. | 4900 |
| 4010-0240 | 200 Gallon "R" Water Tank. UPF Poly III color fill towers. Note: Any foam cell(s) and/or storage options through the tank will reduce the overall water capacity. | 2130 |
| 4010-0256 | 500 Gallon R Water Tank Note: Any foam cell(s) will reduce the overall water capacity. Locate center of the truck between L4/R4 and L5/R5. This option will partially protrude into the L3/R3 compartment and delete the transverse area in L4/R4 and L5/R5. | 7332 |
| 4010-0263 | 250 Gallon "R" Water Tank UPF Poly III color fill towers. Note: Any foam cell(s) will reduce the overall water capacity. Locate centered between the L1/R1 compartment. | 6727 |
| 4015-0007 | Pump cooler 1/4" valve with 3/8" tubing. | 189 |
| 4015-0029 | Hale pressure relief valve. | 1459 |
| 4015-0037 | Engine throttle vernier. | 406 |
| 4015-0126 | Hale PTO/MIDSHIP 250GPM to 1000gpm Pump Pressure Relief Valve | 2577 |

| Item No. | Description | |
|---|---|---|
| 4015-0166 | Pump cooler automatic with 3/8" tubing. Include a check valve that is install between the pump discharge and tank that will automatically close when drafting. | 162 |
| 4015-0189 | Darley Fluid Primer IPOS. | 156 |
| 4015-0221 | Additional 9323 electric controller for 6" intake electric valve. Location officer side pump panel. Include 1/4" air bleeder. | 1479 |
| 4015-0231 | Qmax Pump gear box to be "R" IPOS. | 923 |
| 4015-0234 | Control for engine cooler. Includes Innovative Controls 1/4 turn valve with "T" handle and label. Requires engine cooler option. | 398 |
| 4015-0235 | Pump Shift Override - driver's side under running board rearward of running board tray if applicable. (Rod linkage in place of cable.) | 1326 |
| 4015-0237 | Trident Automatic Pump Primer w/gauge. IPOS | 1219 |
| 4015-0252 | Hale Anode Pro Kit (3) Anodes with Flange. One on each suction tube and one anode on the discharge located as close to the center of the pump as possible. Display monitor location: Pump panel. | 1271 |
| 4015-0254 | Flame Plated Impeller Hubs Waterous pump. | 793 |
| 4015-0255 | Pump 6" inlet both side shall be recess to allow room for a Akron 7983 piston valve to fit and not extend out pass the running boards. | 1325 |
| 4015-0259 | Control for engine cooler. Includes Class1 1/4 turn 3/8" valve with "T" handle and label. Requires engine cooler option. | 398 |
| 4020-0078 | Notch forward lower face of water tank. Notch along forward lower face of tank to accommodate 20 in. raised floor. | 1504 |
| 4020-0079 | Water tank notched at forward face lower corner (overall tank capacity will be reduced). Notch along forward lower face of tank for speedlay clearance. | 652 |
| 4020-0088 | Water tank notched at rear lower face (overall tank capacity will not be reduced). Notch along rear lower face of tank to accommodate ladder tunnel clearance from aft body compartment. | 652 |
| 4020-0089 | Water tank notch. Add vertical channel shaped notch on forward face (overall tank capacity will be reduced). Notch on forward face of tank sized to accommodate speedlay plumbing clearance. | 652 |
| 4020-0090 | Water tank notched at rear (overall tank capacity will be affected). Notch tank at rear as necessary to accommodate clearance for plumbing. | 652 |
| 4100-0000 | 10 gallon integral foam tank for [#LOC]. Foam tank capacity will reduce the water tank capacity. | 1084 |
| 4100-0025 | 600 gallon integral foam tank for [#LOC]. Foam tank capacity will reduce the water tank capacity. Tank capacity is 600 US gallons / 499 Imperial gallons / 2271 Liters. | 10182 |
| 4100-0034 | 10 gallon integral foam tank for [#LOC]. UPF Poly III [#COL] fill tower. Foam tank capacity will reduce the water tank capacity. | 1084 |
| 4100-0075 | 5 gallon integral foam tank for [#LOC]. UPF Poly III [#COL] fill tower. Foam tank capacity will reduce the water tank capacity. | 1084 |
| 4110-0019 | All foam service valves to be stainless steel IPOS. No PVC valves to be used. | 544 |
| 4110-0020 | Foam tank outlet. Includes 1" male camlock adaptor and connector (ship loose). Outlet location: (1)driver and (1) officer side pump panel. | 1072 |
| 4405-0100 | Booster reel rewind switch. Switch located [#LOC]. | 133 |
| 4405-0135 | Booster Reel w/2" Elkhart Electric Unibody Valve with UICS-2 CAFS Controller. Reel to have capacity of 200' of 1" (not included). Locate driver side of pan. | 6306 |
| 4405-0145 | Akron Booster reel with electric valve controller front bumper. Center between frame rails. Will hold 150' of 1'' or 250' of 3/4'' booster hose. | 8610 |
| 4415-0008 | 1.5" front bumper discharge Akron manual valve. | 1765 |
| 4415-0011 | 2.5" Front Bumper Discharge Akron Electric Valve | 3818 |
| 4415-0012 | 1.5" Crosslay with Akron manual valve. Location: [#LOC]. | 1099 |
| 4415-0014 | 2.5" Left Pump Panel Discharge Akron Manual Valve. Location: [#LOC]. | 1145 |
| 4415-0161 | 2.5" Left Panel Discharge Akron Manual Valve w/30 Degree Chrome Droop. Location: [#LOC]. | 1437 |
| 4415-0904 | 2" front bumper discharge Elkhart Electric valve. Include Elkhart electric valve plumbing and harness from the valve to joystick control located in cab console. Discharge to terminate and capped off just below the center of the bumper for dealer supplied and installed joystick and bumper turret. | 2720 |
| 4415-0925 | All Discharge/Intake caps and plug to be Kochek brand and Powder coated. Color; White. | 671 |
| 4415-0938 | 2.5" Left Pump Panel Discharge Akron Manual Valve. The discharge shall extend out beyond the pump panel w/Chrome plated finish. Location: [#LOC]. | 1291 |
| 4415-0939 | 2.5" Right Pump Panel Discharge Akron Manual Valve. The discharge shall extend out beyond the pump panel w/Chrome plated finish. Location: [#LOC]. | 1291 |
| 4415-0967 | 1.5" Crosslay w/2.5" Akron Manual Valve and plumbing. Include 2.5" FNST X 1.5" MNST adapter. Location: [#LOC]. | 1340 |
| 4415-1045 | Preconnect extension (Each). The front hosebed preconnect to be extended to the rear of the hosebed area. Includes smooth plate cover. Location: second officer side hose bed preconnect is to treminate approx 10" from back edge of hosebed. | 458 |

| Item No. | Description | |
|---|---|---|
| 4415-1052 | 1.5" Preconnect Discharge Akron Electric Valve with 9325 controller with pressure reading only. Locate (1) L1 and (1) R1. | 4095 |
| 4415-1054 | 2.5" Front Bumper Discharge Akron Manual Valve. Locate 2.5" discharge under front bumper on officer side center under officer side. | 2028 |
| 4415-1056 | 1.5" crosslay with Akron manual valve and no swivel. For use with discharges that locate below the hose beds. Location: [#LOC]. | 1099 |
| 4415-1068 | 1.5" Crosslay w/2" Akron Electric Valves with a Navigator 9325 controller. Include presure sensor for pressure read out only. Location: [#LOC]. | 4033 |
| 4415-1086 | 4" Front Discharge w/4" Elect 9323 Akron Valve and Plumbed Thrugh Front Bumper. | 7519 |
| 4415-1087 | 4" Left Pump Panel Discharge w/4" Akron Electric Valve with 9323 controller. (Waterous pumps noted location to be forward lower port) Location: [#LOC] | 5361 |
| 4415-1090 | 4" Discharge with 4" Akron Electric valve. The discharge plumbing will be wye into the 5" rear intake plumbing. Where the rear intake can be utilized as a Intake or Discharge. | 5116 |
| 4415-1094 | 3" Right Rear Discharge UBEC3 Electric Valve to read flow and pressure. Location: Right rear. | 7513 |
| 4415-1095 | Triple Speedlay (2) 1.5" and (1) 2.5" with Akron valves hand wheel control. | 8010 |
| 4415-1116 | 2.5" Right Pump Panel Discharge Waterous Manual Valve. Location: [#LOC] | 1621 |
| 4415-1118 | 2.5" Left Pump Panel Discharge Waterous Manual Valve. Location: [#LOC] | 1568 |
| 4417-0154 | Additional electric controller for discharge electric valve locate adjacent to the outlet. Locate.[#LOC]. | 1957 |
| 4417-0163 | Additional control for deck gun valve handwheel control locate adjacent to discharge outlet. Hand wheel to be extended to top of pan. | 1625 |
| 4417-0171 | Deck Gun Pipe. The piping for the deck gun shall terminate with a 4 bolt flange. | 186 |
| 4417-0178 | Task Force Tip Hurricane Manual Monitor XFIH-D61A female NPT thread for use with Manual Extend-a-gun. | 1774 |
| 4417-0179 | Task Force 2.5 Master Stream 1250 Series M-R1250-NJ Manual Nozzle | 1561 |
| 4417-0183 | Monitor Scorpion 8294-02 Monitor w/2000gpm Nozzle. | 10087 |
| 4417-0196 | Task Force Tip Hurricane XFIH-DL1A Manual Monitor with MST-4NJ-2.5"NH Quad Stack Tips and M-R1250-NJ Automatic Nozzle. | 4494 |
| 4417-0197 | The crosslay preconnects shall be mounted vertical approximately 1" below the top of the pump module xlay when installed. Preconnect #1 will deploy off driver side and preconnect #2 will deploy off officer side. | 131 |
| 4417-0200 | Chrome discharge elbow 3"FNST x 2.5"MNST 45 Deg with cap. | 275 |
| 4417-0204 | Trident Hand Wheel Control.(In place of standard push/pull rod.): Location [#LOC]. | 1142 |
| 4417-0206 | Innovative Controls 3/4" Bleeder drain valve plumbed to: direct/inlet tank fill. | 131 |
| 4417-0209 | Monitor Akron 3480 Electric StreamMaster II with 5178 2000gpm electric nozzle. | 13957 |
| 4417-0213 | Discharge elbow 2.5"FNST x 2.5"MNST 45 Deg to be painted job color. | 275 |
| 4417-0214 | Monitor Akron 3480 Electric StreamMaster II 2000gpm with 5178 nozzle. Include a panel mount control with stow and hand held wireless remote control. | 14290 |
| 4417-0220 | Akron 5075 Akromatic 2.5" master stream nozzle for an Akron 3440 DeckMaster monitor. | 1986 |
| 4417-0222 | Extend-a-Gun piping shall terminate with 4 bolt flange and be position in storage pan so it don't affect OAH w/8297 MONITOR. | 186 |
| 4417-0229 | The Akron electric controller to have Lexan guardr cover. (SEE PICTURE IN FILE) | 127 |
| 4417-0238 | Trident 6" Hand Wheel Control.(In place of standard push/pull rod.): Location [#LOC]. | 1354 |
| 4417-0240 | Task Force Tip Hurricane XFIE-FLNJ Manual Monitor with MST-4NJ-2.5" NH and M-R1250-NJ Automatic Nozzle. | 3729 |
| 4417-0241 | Akron Apollo (3433) High Rise Monitor. Include lift off and direct mount only. Include Hi-Riser direct mount base. | 4316 |
| 4417-0242 | Trident 3/4" bleeder/drain valve include 1/4 turn rectangular chrome plated brass handle. | 27 |
| 4430-0014 | Hale 2.1A FoamLogix foam system. | 8030 |
| 4430-0017 | 400 Rockwood around the pump foam system. | 3588 |
| 4430-0137 | 95 GPM Akron Foam Eductor Air Actuated. Plumb to both 1.5" preconnects. | 3261 |
| 4430-0144 | 1.5 Feecon Around The Pump Foam System | 9209 |
| 4430-0148 | FoamPro Turbo Ultra High Pressure foam system with a Dual-Action spray gun. Include booster reel model E1520-17-18 with 100' of 5/8" high pressure hose. Location L1. | 8886 |
| 4432-0099 | Foam System Plumbed to [#LOC]. | 338 |
| 4432-0208 | Foam tank B outlet valve shall have rubber hood latch as a secondary lock. | 212 |
| 4432-0211 | All foam service/drain valves to be brass or stainless steel IPOS. No PVC valves to be used. | 544 |
| 4432-0212 | Foam tank outlet 1.5" plumbed to pan. Include 1.5" valve manual control with cam-lock fiiting and cap located in the pan off set to officer side rearward. (Dealer supply HYDRO foam nozzle. | 1199 |
| 4435-0013 | 4.5" Class 1 compound pressure gauge (30-0-600 PSI). | 217 |
| 4435-0015 | 2.5" Class 1 compound pressure gauge (30-0-600). Discharge(s): [#LOC]. | 157 |
| 4435-0083 | Innovative Controls 10 LED SL series water tank level gauge. On pump panel. | 563 |
| 4435-0084 | Innovative Controls 10 LED series foam tank level gauge. On pump panel. | 807 |
| 4435-0086 | Innovative Controls 10 LED series Tank Level Water Mini Gauge. Location: [#LOC]. | 603 |

| Item No. | Description | |
|---|---|---|
| 4435-0126 | Digital Master Pressure Gauge | 887 |
| 4435-0131 | 2.5" Class 1 Pressure Gauge (0-300). Discharge: [#LOC] | 165 |
| 4435-0194 | FRC TachPro model TPA600-A00 engine monitoring display. Location: officer's side overhead outboard and L1 adjacent to breaker box. | 1417 |
| 4435-0241 | Innovative Controls 10 LED series foam tank level gauge with a bright yellow easy to read graphics overlay. On pump panel. | 806 |
| 4435-0243 | 4" Innovative Controls Brass Case Nite-Glo Master Pressure Gauges with Bezel. Intake 30-0-400 and Discharge 0-400. | 991 |
| 4435-0244 | 2.5" Innovative Controls brass case pressure gauge (0-400) with color code bezel. | 180 |
| 4435-0246 | 2.5" Innovative Controls stainless steel case pressure gauge (0-400) with color code bezel. | 158 |
| 4435-0247 | 4" Innovative Controls stainless steel case master pressure gauges with bezel. Intake 30-0-400 and discharge 0-400. | 448 |
| 4435-0248 | 2.5" Innovative Controls stainless steel case dual read pressure gauge (0-2750KPA/0-400PSI) with color code bezel. | 158 |
| 4435-0249 | 4" Innovative Controls stainless steel case master pressure gauges with bezel. Intake 30-0-400 and discharge 0-400 dual read KPA/PSI. | 448 |
| 4435-0250 | 2.5" Innovative Controls brass case pressure gauge (0-400) with color code bezel. | 180 |
| 4435-0254 | 4" Innovative Controls brass case master pressure gauges with bezel. Intake 30-0-400 and discharge 0-400. | 668 |
| 4435-0255 | 4" Innovative Controls brass case master pressure gauges with bezel. Intake 30-0-400 and discharge 0-400 dual read KPA/PSI. | 658 |
| 4435-0258 | Addition 4" Innovative Controls stainless steel case master pressure gauges 0-400. Locate driver side pump panel. | 260 |
| 4435-0261 | 4" Innovative Controls stainless steel case master pressure gauges with bezel. Intake 30-0-400 and duplex discharge 0-400 for CAFS and Industrial applications. | 1516 |
| 4435-0262 | 2.5" Innovative Controls Nite-Glo brass case pressure gauge (0-400) and color code bezel with blue light gauge illumination. | 358 |
| 4435-0263 | 2.5" Innovative Controls Nite-Glo brass case pressure gauge (0-400) and color code bezel with red light gauge illumination. | 358 |
| 4435-0264 | FRC TankVision/FRC Maxvision water tank level gauge package. Location of FRC Maxvision Strip-Lights: each side of cab towards rear | 2893 |
| 4435-0266 | 2.5" Innovative Controls Nite-Glo brass case pressure gauge (0-400) and color code bezel with white light gauge illumination. | 358 |
| 4435-0269 | 4" Innovative Controls stainless steel case pressure gauge (0-400). Location: Master discharge pressure gauge. | 246 |
| 4435-0272 | 4" Innovative Controls stainless steel case master pressure gauges with bezel. Intake 30-0-400 and duplex discharge 0-400 dual read KPA/PSI. for CAFS and Industrial applications. | 1516 |
| 4435-0274 | 2.5" Innovative Controls stainless steel case pressure gauge (0-300) with color code bezel. | 158 |
| 4435-0279 | Class 1 3.5" discharge gauges. Provide for each discharge. (0-600) | 1876 |
| 4435-0280 | 6" Class 1 master pressure gauges. Intake 30-0-600 and discharge 0-600. | 1495 |
| 4435-0291 | 4" Innovative Controls stainless steel case master pressure gauges with bezel. Intake 30-0-400 and duplex discharge 0-400 for CAFS and Industrial applications. IPOS HALE | 448 |
| 4435-0293 | Class 1 3.5" discharge gauges. Provide for each discharge. (0-300) [#LOC] | 187 |
| 4440-0005 | 2.5" Left Intake Akron Manual Valve. | 1246 |
| 4440-0010 | 3" Left Intake Akron Manual Valve. | 2043 |
| 4440-0092 | 3" Left Intake Elkhart Unibody Manual Valve | 2043 |
| 4440-0102 | 3" Left Rear Intake Akron Electric Valve w/Intake Relief Valve | 3937 |
| 4440-0132 | 5" Left rear intake no valve. | 3023 |
| 4440-0146 | Aux 2.5" foam system intake with swing handle. Locate to be [#LOC]. | 1246 |
| 4440-0166 | 4" Right Rear Intake w/4" Air Actuated Valve and Relief. | 5030 |
| 4440-0172 | 5" Front Intake w/5" Jamesbury Valve Hand Wheel Actuated and Relief. "Low S" | 7471 |
| 4445-0009 | Intake relief valve Akron. | 518 |
| 4445-0060 | Front intake bleeder valve to be located adjacent to inlet at front bumper. | 101 |
| 4445-0075 | Manual override knob on officer's side pump panel for front intake electric valve. | 371 |
| 4445-0079 | Intake Adapter 4" FNPT x 5" MNST with cap for Rear Intake | 479 |
| 4445-0080 | Intake pressure relief valve Trident Air Max with adjustment knob and pressure gauge. | 1565 |
| 4450-0010 | 2" tank fill Akron manual valve. | 1237 |
| 4450-0020 | 2.5" rear direct tank fill. Location: [#LOC]. | 1497 |
| 4450-0023 | 3" Tank to Pump Akron Air Actuated Valve | 1825 |
| 4450-0032 | 2" Tank Fill Akron Electric Valve | 3048 |
| 4450-0037 | 4" Tank To Pump Akron Air Valve for Rear Mount | 4087 |
| 4450-0096 | Electric 3" Akron tank to pump. Controller located on pump control panel. | 3655 |
| 4450-0243 | Direct 2.5" Water Tank Fill with Firemen Friend high flow Valve. Location: B1. | 1723 |

| Item No. | Description | |
|---|---|---|
| 4450-0256 | 2.5" Rear Direct tank fill. Includes Fireman Friend 3" valve with 4" body to terminate with 2.5" FNST adapter 30 degree droop and plug. Location; B1 | 1915 |
| 4450-0257 | 1.5" Tank Drain Elkart Manual Valve with pull cable control at left pump panel. Valve shall be located at the tank sump and extend plumbing below frame rail. | 948 |
| 4450-0258 | 1.5" Tank Fill/Re-circulation line Akron manual valve. | 1030 |
| 4450-0259 | 1.5" Tank Fill/Re-circulation line Elkhart manual valve. | 1030 |
| 4450-0264 | Second 3" tank to pump Akron manual valve w/4" tank connection. | 1328 |
| 4450-0267 | 2.5" Direct Fill Line into the tank Elkhart electric valve. Location: driver side pump panel. | 3617 |
| 4450-0272 | 2.5" Direct Fill Line into the tank Elkhart electric valve. Location: driver side pump panel. | 3617 |
| 4450-0273 | Direct 2.5" Water Tank Fill with Akron manual/Firemen Friend Valve. Location: Officer side rear below ladder tunnel. Include 2.5" stainless steel pipe and/or high pressure flexible hose from the connection to the water tank. | 2975 |
| 4460-0078 | Pump panel tags special color. #1 -Red Crosslay #2 -Yellow 2" tank fill- Black 3" tank to pump- Black 2.5" Left Intake - Black 2.5 Left rear dis -Blue 3" Deck Gun - Grey 2.5 Left Dis - Pink 2.5 Right Dis- Green 4" Right Dis- Purple. | 356 |
| 4460-0085 | CAFS Air Outlet Valve Recess Driver side Pump Panel with door. | 420 |
| 4460-0096 | Speaker Grille Located on the pump operator panel. | 276 |
| 4465-0005 | Class 1 Captain pressure governor. | 3271 |
| 4465-0011 | Class 1 TPG pressure governor. Includes water oil volt and tachometer. | 2522 |
| 4465-0024 | The Pressure Governor as mounted on the pump panel shall include a stainless steel shield/visor to shade the display from direct sunlight (the shield/visor shall share the same painted on finish as the pump panel if applicable). | 171 |
| 4465-0029 | Pressure Governor shall be mounted in a diamond plate box located at front of L1 compartmet above pump operator panel. | 164 |
| **ELECTRICAL SYSTEMS** | | |
| 5010-0002 | Multiplex electrical system for pumper / tanker / rescue. | 3917 |
| 5010-0003 | Multiplex modem kit. Includes cable modem and adapter harness. | 1027 |
| 5010-0004 | Multiplex data logger. | 727 |
| 5010-0014 | Vehicle data recorder for commercial cab - 2009 / 2016 NFPA compliant. Includes occupant detection with display. Display location: [#LOC]. | 1661 |
| 5010-0015 | Additional CrewGuard display for use with VDR. Location: [#LOC]. | 557 |
| 5010-0024 | Modem for use with the E-ONE multiplex electrical system. | 717 |
| 5010-0048 | Vehicle data recorder for commercial cab - 2009 NFPA compliant. Includes occupant detection with display. VDR will be in installed by Manning Equipment and delivered with chassis. | 124 |
| 5010-0053 | Vehicle data recorder for commercial cab - 2009 / 2016 NFPA compliant. Includes occupant detection shown in multiplex display. | 1064 |
| 5010-0059 | VFD Text display for V-MUX electrical system. Location: [#LOC]. | 890 |
| 5010-0074 | Special programming for multiplex color display (per hour). Requires engineering review and approval to determine feasibility and time. | 60 |
| 5010-0075 | Vista display to have a customized sticker for legend buttons (Reference info in file for new configuration). May require special programming fee. | 596 |
| 5010-0078 | Link2 Vehicle information system for V-MUX electrical system. Does not include required subscription. | 1688 |
| 5010-0079 | Vista display translated to French. | 789 |
| 5010-0085 | Vista IV touch screen DIN mount display for V-MUX electrical system. Does not include tactile switches. Commercial chassis only. Location: Inside rear body entry door way on LH bulkhead 5 feet above bottom entry way step off set inboard. | 2056 |
| 5015-0016 | See Spec for full details for VanMor interior. | 72666 |
| 5050-0000 | Vanner Bravo 1800 watt inverter. For use with (2) quartz lights. Includes on/off switch in cab. Inverter to be mounted in a body compartment as close to the chassis batteries as practical (20' max cable length). | 3190 |
| 5050-0002 | Vanner 2600 watt inverter. For use with (2) quartz lights. Includes on/off switch in L1 compartment next to breaker box. Inverter to be mounted in a L1 up high (20' max cable length). | 4925 |
| 5050-0003 | Vanner 2600 watt inverter. For use with (2) quartz lights. Includes on/off switch in driver overhead console. Inverter to be mounted in L3 up high forward (20' max cable length). | 4925 |
| 5050-0005 | Fluorescent light (EA). Locate above walkway in walk-in body evenly spaced. | 283 |
| 5050-0007 | Obsolete - A Trip Lite power strip will be Located one on the back wall of the interior compartment one each in the upper cabinets over the desk in the body and one running vertically in L1 rearward. The Trip Lite will be 48" long. | 186 |
| 5050-0008 | A Trip Lite power strip will be Located one on the back wall of the interior compartment one each in the upper cabinets over the desk in the body and one running vertically in L1 rearward. The Trip Lite will be 48" long. | 734 |

| Item No. | Description | |
|---|---|---|
| 5050-0010 | Auto transfer switch 120 volt near main circuit breaker panel. Includes 8 place breaker box. Allows interior fluorescent lights chargers and refrigerator to be powered by either shorepower or generator. | 846 |
| 5050-0012 | One (1) 1/8" DA finish aluminum seven-slot electrical pigtail holder shall be provided and mounted in compartment 1 on secondary door pan. | 136 |
| 5050-0015 | Vanner 2600 watt inverter (NFPA rating at 1400 watts). Includes on/off switch in L1 compartment. Inverter to be mounted in a L1 forward wall up high (20' max cable length). | 4925 |
| 5050-0016 | Vanner 2600 watt inverter (NFPA rating at 1400 watts). Inverter to be mounted in a L1 on permanent shelf (20' max cable length). | 4925 |
| 5050-0017 | Body 110 volt outlets shall have a dedicated breaker within the breaker box for no more than every (2) body mounted receptacles (single outlet duplex etc. as applicable). This is to provide multiple isolated circuits as required that carry no more than (2) receptacles located throughout the body. | 589 |
| 5050-0018 | Vanner Tru-sine 1000 watt inverter. For use with (4) cab interior receptacles when generator is not running or shoreline is not connected. Includes on/off switch in cab. Inverter to be mounted in a body compartment as close to the chassis batteries as practical (20' max cable length). | 2147 |
| 5050-0019 | Inverter prewire for dealer/customer supplied and installed 3KW inverter. Includes 12 volt wiring and A/C cabling to breaker box. Prewire to [#LOC]. | 914 |
| 5050-0021 | Inverter prewire for dealer/customer supplied and installed 5KW inverter. Includes 12 volt wiring and A/C cabling to breaker box. Prewire to [#LOC]. | 1020 |
| 5100-0000 | Foot switch to control air horns located [#LOC]. | 133 |
| 5100-0001 | Switch circuit three way. Includes (1) additional switch. An additional switch required for more than two locations. Location: [#LOC]. | 188 |
| 5100-0006 | Foot switch to control Q2B located [#LOC]. | 133 |
| 5100-0007 | Foot switch to control electronic siren located [#LOC]. | 133 |
| 5100-0009 | Audible door ajar alarm wired through door ajar light. | 69 |
| 5100-0011 | Switch 12V for 120-240V (EA). Location: [#LOC]. | 479 |
| 5100-0014 | Air horns to be interlocked through the master warning switch. | 112 |
| 5100-0015 | Back-up alarm override momentary switch located at the cab dash. The switch will allow for overriding the back-up alarm and reset after transmission is shifted again. | 66 |
| 5100-0019 | Additional amber warning light override momentary switch located at the cab warning light switch panel. The switch will allow for overriding the rear additional amber warning lights and reset after ignition is turned off. | 359 |
| 5100-0021 | Opticom switch wired through upper level warning switch. | 85 |
| 5100-0036 | Additional programming instructions: [#LOC]. | 139 |
| 5100-0039 | Foot switch(es) mounted on a 45 degree bracket. | 91 |
| 5100-0042 | Ramsey control with 3' cord for cab tilt in addition to standard toggle. Red/Black weatherproof push buttons at end of cord. Location of switch plug-in: [#LOC]. | 418 |
| 5100-0046 | Cut-off switch for Q2B main power. Switch to be accessible from driver's seat. | 305 |
| 5100-0047 | Switch household 110V w/ weaterproof cover. Location and function: cab mounted next to air compressor for 120V air compressor | 225 |
| 5100-0048 | Magnetic door ajar switches IPO std for all body compt doors. | 812 |
| 5100-0052 | Household toggle switch for 110V. Switch plate will be a Crouse Hinds TP7256. Switch will be wire to top plug of duplex recept on rear and be located next to recept. One switch for each top duplex. | 492 |
| 5100-0061 | Door ajar alarm override momentary switch located at the cab dash. The switch will allow for overriding the door ajar alarm and reset after transmission is shifted again. | 225 |
| 5100-0062 | Switch 12V for 110-240V (EA). E-One supplied and installed relays and Van Mor supplied and installed switches. Locate the relays near breaker box. | 479 |
| 5100-0068 | Switch button for Q2B siren. Locate on dash control panel area within reach of the [#LOC] position. Label as space permits. | 212 |
| 5100-0070 | Air horn switch in the interior. Switch to be labeled ''Evacuation Alert''. Location: [#LOC]. | 158 |
| 5100-0071 | Display switch function and location: (2) front cab dome lights: clear light switched at driver and officer displays; red light switched at driver and officer displays. (3) Cab dome lights above rear facing seats: clear light switched at driver and officer displays; red light switched at driver and officer displays. Front scene lights at driver and officer displays. Driver side scene lights at driver and officer displays. Officer side scene lights at driver and officer displays. Rear facing scene lights at driver and officer displays. | 623 |
| 5100-0087 | Ramsey control plug-in for cab tilt in addition to standard toggle. Does not include tether controller. Location: [#LOC]. | 235 |
| 5100-0088 | Linemaster Twin 491-S foot switch to control air horns and Q2B located [#LOC]. | 425 |
| 5100-0089 | Foot switch to control electric fire bell located [#LOC]. | 133 |
| 5100-0090 | Foot switch to control Scream Eagle siren located [#LOC]. | 133 |
| 5100-0091 | Switch 12V for 110-240V (EA). Location: cab switch panel for rear body quartz light(s). | 479 |

| Item No. | Description | |
|---|---|---|
| 5100-0095 | Switching controlled through the Multiplex display for 120-240V devices (EA). The 120-240V Multiplex switching utility shall be used for: [#LOC]. | 479 |
| 5100-0099 | Momentary rocker switch for the Federal Rumbler (secondary siren) located on the driver and officer side overhead panels. The switches will allow for overriding the Federal Signal Rumbler siren and reset after ignition is turned off. | 359 |
| 5100-0102 | A cab interior audible alarm and hazard light. The light shall be blue in color and 2" diameter The alarm and hazard light shall be wired to the light tower to provide a clear indicator of when the light tower is raised or not in the bedded position. The light shall be mounted in the vicinity of the door ajar hazard light. | 166 |
| 5100-0105 | Switch momentary. Head lights running lights and tail lights (on with ignition) override momentary switch located at the cab dash. The switch will allow for overriding the head lights running lights and tail lights (turning them off momentarily) after the ignition has been turned on. | 225 |
| 5100-0107 | Cut-off switch for Q2B main power. Switch to be accessible from officer's seat. | 305 |
| 5100-0108 | Switch circuit three way 12V for 120-240V (EA). Includes (1) additional 12V for 120-240V switch. An additional switch required for more than two locations. Location: [#LOC]. | 479 |
| 5100-0109 | Audible alarm to sound when water level is below 1/4 tank remaining. | 319 |
| 5100-0112 | Ramsey control on officer side cab dash with 3' cord to operate Q2B and air horns. Red switch Q2B Black air horns. | 393 |
| 5100-0115 | Monarch control for cab tilt in place of standard toggle. | 458 |
| 5100-0116 | Weldon 4-button V-MUX switch module. Location [#LOC]. | 458 |
| 5100-0117 | Switch additional momentary 12 volt/15 amp. Location and function: [#LOC]. | 225 |
| 5100-0118 | Door ajar indicator switch for each SCBA air bottle storage compartment door on body wired to "Door Open" indicator inside cab. Switches as optioned are in addition to standard SCBA bottle retainer straps. | 63 |
| 5100-0120 | Switch additional guarded toggle. Location and Function: driver side rear of body for rear flood lights. | 225 |
| 5100-0125 | Door ajar indicator switches for all SCBA air bottle storage compartment doors on cab wired to "Door Open" indicator inside cab. | 63 |
| 5100-0127 | Switch panel three way. Includes (7) additional switches. An additional switch required for more than two locations. Location: L1 adjacent to breaker box for front brow lights driver 120V cab/body scene lights officer 120V cab/body scene lights driver 12V cab/body scene lights officer cab/body 12V scene lights and rear 12V scene lights. | 1304 |
| 5100-0128 | Red flip cover for toggle switch. Location: [#LOC]. | 21 |
| 5100-0130 | Weatherproof Eaton rocker switches on pump panel ipo toggle switches. | 258 |
| 5100-0131 | Foot switch(es) mounted on a 30 degree bracket. | 91 |
| 5100-0132 | Switch additional through multiplex display. Function: [#LOC] | 101 |
| 5100-0133 | Switch. Location and function: [#LOC]. | 225 |
| 5100-0134 | Switch 12V for 240V 30A Recept. Location: B1 near compartment door frame 24 inches above the lower compartment floor. | 494 |
| 5100-0139 | Foot switch Linemaster model 632S to control electric siren located [#LOC]. Includes 25 degree diamond plate bracket. | 133 |
| 5100-0140 | Ramsey control with 3' cord for cab tilt in place of standard toggle. Red/Black weatherproof push buttons at end of cord. Includes receptacle with cover. Location of receptacle: [#LOC]. | 418 |
| 5100-0142 | Switch door ajar additional. Location: front bumper raised lid. | 225 |
| 5100-0144 | Magnetic door ajar switch IPO std for [#LOC] body compt door. | 116 |
| 5100-0145 | Additional driver side overhead switches in addition to vista screen operations. See specifications. | 2920 |
| 5100-0147 | Ramsey control with 3' cord for cab tilt in addition to standard toggle. Red/Black weatherproof push buttons at end of cord hardwired adjacent to standard toggle. | 418 |
| 5100-0149 | Switch lever 120V shoreline disconnect. Location: Adjacent to shoreline receptacle. | 479 |
| 5100-0156 | Locate windshield wiper control below transmission shifter IPOS. | 64 |
| 5110-0003 | High impact orange ABS plastic handheld spotlight SL-45 Location: [#LOC]. | 239 |
| 5110-0004 | Alternating flasher for headlights. | 383 |
| 5110-0005 | Pre-wire for trailer hitch. Includes stop left turn right turn marker and ground wires. Does not include connector. | 270 |
| 5110-0007 | Audible indicator in cab with rear button. The rear button will be located on the driver's side at the rear behind the hand rail (if applicable). | 391 |
| 5110-0010 | Receptacle 12V 175A portable winch. Located at rear near trailer hitch. | 400 |
| 5110-0017 | Back-up alarm 97 dB. | 117 |
| 5110-0018 | 12 volt 12 gauge constant hot lead (24" long) with ground wire. Location: [#LOC]. | 91 |
| 5110-0024 | Back up alarm Grote 107 dB(A). | 299 |
| 5110-0034 | 4 Pin trailer wiring flat connector. Includes matching plug. Requires trailer wiring pre-wire option. | 106 |

| Item No. | Description | |
|---|---|---|
| 5110-0036 | All 12 Volt electrical components and Multiplex box will be located in R1 back wall. The compartment depth will be limited by approx 6". | 139 |
| 5110-0041 | 7 pin trailer wiring connector. Requires trailer wiring pre-wire option. | 141 |
| 5110-0042 | Trailer wiring and connector for 2009 NFPA 1901 Type I Type II or Type III trailer. Includes model 12-907 connector on body. Stop/turn/tail circuits shall be connected remaining wires to be coiled up for future use. Trailer end 12-906 shipped loose. | 522 |
| 5110-0043 | Back-up alarm Federal Reactor model 210350 self-adjusting. | 204 |
| 5110-0046 | 4 Pin trailer wiring heavy duty round connector. Includes matching plug. Requires trailer wiring pre-wire option. | 118 |
| 5110-0052 | 12V power distribution module. Includes (6) battery hot and (6) switched hot circuits. 100 amps max (IATS). Location: [#LOC]. | 347 |
| 5110-0057 | 7 Pin trailer wiring connector SAE J5606. Requires trailer wiring pre-wire option. This will include the Male and Female connections. | 213 |
| 5110-0059 | E-One supplied/Van-Mor installed ambulance style exhaust fans. Locate one on rear wall in the robot area up high offset to the driver's side and a vent for fresh air offset to the officer's side one on the officer side up high above the rearward counter top and a fresh air vent on the driver's side up high above the forward most desk area and one in the forward bomb suit closet with a vent between the 2 closets. | 169 |
| 5110-0061 | Run RG58U antenna cables. Run each cable from [#LOC]. | 98 |
| 5110-0065 | Lighted bumper guide (PR). Bores model 848211 located (1) each side of front bumper extension. | 461 |
| 5110-0067 | Back up alarm Preco 97 dB(A) warble tone. | 303 |
| 5110-0068 | Handheld flashlight orange Streamlight Litebox flashlight with vehicle mount system. Location: [#LOC]. | 214 |
| 5110-0069 | Back up alarm ECCO model 410 97 dB(A) grommet mount. | 234 |
| 5110-0071 | CAT 6 receptacle. This will include CAT 6 wire solid conductors non-plenum. Locate 1 over desk in cab 2 over the desk in the body and 1 at the officer's side front seat in the cab. Each CAT 6 cable will terminate in the rack area with a 36" service loop. | 135 |
| 5110-0079 | Back up alarm Ecco model SA917 87-112dB. | 266 |
| 5110-0082 | Receptacle 12V 175A portable winch. There will be a total of four locate one at each of the receiver. | 1593 |
| 5110-0083 | Receptacle 12V 175A portable winch. There will be a total of three locate one at each of the side and rear receivers. | 1195 |
| 5110-0087 | Tekonsha model Prodigy 2 trailer brake controls wired to connector. Control located in cab accessible to driver. Requires 9-pin connector. | 994 |
| 5110-0088 | Lighted bumper guide (PR) with angled support brackets. Bores model 848211 located (1) each side of front bumper extension. | 597 |
| 5110-0089 | Back-up alarm Ecco model 575 107dB. | 196 |
| 5110-0090 | Breaker box grounding cable. 10' 2Ga cable attached to ground side of breaker box. Includes clamp on end of cable for use with aerial ground pad. | 262 |
| 5110-0096 | Conduit flexible 1.5" for Camera Mast installation. Run the conduit from the roof area on the driver's side above the rear interior to the breaker box. Conduit should also be run fron the same roof area to under the body in order to run air lines for camera mast and to the desk area on the driver's side. | 668 |
| 5110-0101 | Back up alarm Federal Reactor Model 210505 (PR). Includes stainless steel cover for protection. | 644 |
| 5110-0103 | Fans 8" pair. Location: ceiling mounted in rescue interior. (1) at entrance and (1) forward. | 418 |
| 5110-0104 | (3) 12VDC Anderson Power Products 12 volt connections shall be installed (1) in compartment L1 (1) in compartment L2 and (1) in compartment R2. | 551 |
| 5110-0105 | Transmission Temperature Gauge with light and a buzzer alarm for audible warning. Located adjacent to breaker box. | 405 |
| 5110-0110 | Receptacle 12V 175A portable winch. Located at front near receiver. | 400 |
| 5110-0112 | Back up alarm Preco model 1040. | 202 |
| 5110-0120 | Receptacle 12V 175A portable winch. There will be a total of three locate one at each of the side and front receivers. | 1195 |
| 5110-0121 | All 12 Volt electrical components and Multiplex box will be located in L1 forward wall next to breaker box. The area will be covered with an aluminum removable panel. | 494 |
| 5110-0125 | Receptacle 12V 175A portable winch. There will be a total of (2) locate one (1) on each side near under body receivers. | 798 |
| 5110-0127 | 12 volt 6 gauge lead wired through ignition (24" long) with ground wire. Location: [#LOC]. | 250 |
| 5110-0131 | Antenna bases three (3) separate Tessco P/N 90942 (NMO Motorola style - also known as MATM style) shall be mounted on the body roof spaced evenly Front to Rear on center line of body. Cables should exit through forward area of upper L4 Bulk Head. | 466 |
| 5110-0133 | 12 volt 10 gauge constant hot lead (24" long) with ground wire. Location: [#LOC]. | 106 |

| Item No. | Description | |
|---|---|---|
| 5110-0138 | Regen indicator light with warning tag . Whelen 500 series TIR6 amber light located in rubrail above exhaust end. Includes warning tag to read "High Exhaust Heat When Flashing". Light to be wired through indicator in cab and park brake. | 350 |
| 5110-0144 | Hopkins 7 pin trailer wiring connector model 48495-7 RV blade. Requires trailer wiring pre-wire option. | 145 |
| 5110-0145 | Pre-Wiring for trailer hitch should include a hot 12vdc and back-up light wire at the connector and a wire from the connector to the cab for future electric brake unit in cab. In the cab there should be a wire labeled for brake lights to connect to future electric brake unit. Connector sold separately. | 270 |
| 5110-0146 | Cole-Hersee trailer tail light converter model 48000. Trailer connector sold separately. | 354 |
| 5110-0153 | 12V power distribution module. Includes (6) battery hot and (6) switched hot circuits. 100 amps max (IATS). Includes circuit breakers ipo fuses. Location: [#LOC]. | 347 |
| 5110-0155 | Customer supplied handheld spotlight SL-45 shall be mounted in place. Location: [#LOC]. | 195 |
| 5110-0158 | 12 volt 12 gauge lead (24" long) with ground wire wired to battery saver. Location: [#LOC]. | 91 |
| 5110-0159 | Rescue body entry door lock - electric wired through cab doors. Includes additional body interior mounted switch barrel style key lock on exterior of door and manual interior lock on door. | 566 |
| 5110-0160 | Pollak 7 pin trailer wiring connector model 12-709. Requires trailer wiring pre-wire option. | 210 |
| 5110-0163 | A dual USB charging port wired to battery hot. Location: [#LOC]. | 77 |
| 5110-0165 | Ambulance style exhaust fan. Locate on driver side wall in REHAB module area up high above bench seat and add a vent for fresh air on the officer's side up high above bench seat. | 262 |
| 5110-0169 | Aluminum smooth plate cover for foam controller shall be located on back of controller. | 228 |
| 5110-0173 | LINE-X package for miscellaneous parts mounted on the body: Includes aerial style or similar brackets used for beacon lights camera shield license plate bracket traffic advisor box (non-recessed only) fabricated shield over traffic advisor fabricated light boxes and other brackets used for mounting scene and warning lights stirrup style switch as applicable. | 285 |
| 5110-0174 | Back up alarm Hella model A1399 SA-BBS-97. | 331 |
| 5110-0175 | Refrigerator Electric DE-788 AC/DC 12/120 Volt. Dual voltage refrigerator for marine and truck applications wired to 12V battery system and shoreline. Norcold DE-788 Marine 3.1 cuft. Color: Black. Refrigerator to be located in [#LOC]. | 1344 |
| 5110-0177 | Receptacle (pair) 12V 175A portable winch. There will be a total of (2) locate one (1) on each side near wheel well side body receivers. | 798 |
| 5110-0179 | Durabak package for miscellaneous parts mounted on the body: Includes aerial style or similar brackets used for beacon lights camera shield license plate bracket traffic advisor box (non-recessed only) fabricated shield over traffic advisor fabricated light boxes and other brackets used for mounting scene and warning lights stirrup style switch as applicable. | 285 |
| 5110-0180 | Collision Avoidance Systems model CAS-4HW rear obstacle detection and proximity system. Includes 4 sensors at rear of vehicle and speaker in cab. | 2106 |
| 5110-0181 | A 12 place 12 volt DC power distribution module will be installed in the body interior electronics compartment. The module will have six (6) circuits wired directly to the battery and will be protected with a 30 amp circuit breaker for overload protection. The module will also have six (6) circuits controlled by the multiplex systems via a 30 amp relay and will be protected with a 30 amp circuit breaker for overload protection. The module will also include 12 positions for grounds. | 437 |
| 5110-0182 | Antenna base Tessco P/N 90942 (NMO Motorola Style - also called MATM style) on body roof. Location: body roof raceway. | 105 |
| 5110-0183 | Install customer supplied WIFI antenna kit. (Pair) Dual LTE 802.11n GPS Multiband. Option includes: Installation of two (2) Dual LTE 802.11n GPS Multiband antennas (cables provided by the customer). Locate: Antennas to be on forward body module roof. One (1) located driver side forward corner and one (1) one the passenger side rear corner. Route supplied cables to inside of electronic cabinet located in forward corner on officer side of module. | 558 |
| 5110-0185 | 12 volt 12 gauge constant hot lead (24" long) with ground wire and circuit breaker. Location: [#LOC]. | 152 |
| 5110-0187 | Pre-wire for customer supplied electric fire bell. Includes push button activation switch on center cab dash offset to officer side. | 379 |
| 5110-0189 | Refrigerator Electric AC/DC 12/120 Volt. Dual voltage refrigerator for marine and truck applications wired to 12V battery system and shoreline. Norcold model NR740BB 1.7 cuft. Color: Black. Refrigerator to be located in [#LOC]. | 1344 |
| 5110-0191 | 12V power distribution module. Includes (12) battery hot circuits. 100 amps max (IATS). Location: [#LOC]. | 347 |
| 5110-0192 | 12V power distribution module. Includes (12) switched hot circuits. 100 amps max (IATS). Location: [#LOC]. | 347 |
| 5110-0193 | Guard for reel push button rewind switch. Qty each. Material: Aluminum. Finish: Sanded. | 122 |

| Item No. | Description | |
|---|---|---|
| 5110-0194 | Indicator light Whelen M4 with chrome flange. Color: green. Location and function: (1) each side up high on pump module wired through pump engage. | 863 |
| 5110-0195 | Refrigerator Electric NR751 AC/DC 12/120 Volt. Dual voltage refrigerator for marine and truck applications wired to battery system and shoreline receptacle. Norcold NR751 Marine 2.7cuft. Color: Black. Refrigerator to be located in [#LOC]. | 1344 |
| 5130-0000 | Cord reel 150 feet of 12/3 black cord installed on the [#LOC] with an electric rewind. | 2052 |
| 5130-0001 | Cord reel electric with 200' of 10/3 black cable. Locate [#LOC]. | 2423 |
| 5130-0002 | Cord reel electric with 200' of 10/3 yellow cable. Location(s): [#LOC]. | 2736 |
| 5130-0003 | Cord reel electric with 200' of 10/4 black cable. Location: [#LOC]. | 2728 |
| 5130-0004 | Cord reel electric with 200' of 10/4 yellow cable. Location [#LOC]. | 3538 |
| 5130-0005 | Ground reel with 20' of cable and 3' rod to be used for grounding unit while using the generator | 465 |
| 5130-0006 | Rollers for cord reel mounted on reel. Locate: [#LOC]. | 395 |
| 5130-0007 | Cord connector. Daniel Woodhead 3 wire NEMA 5-15 straight blade female located on cord for reel in [#LOC]. | 92 |
| 5130-0008 | Cord connector. Daniel Woodhead 3 wire NEMA L5-15 twist lock female located on cord for reel in [#LOC] | 95 |
| 5130-0009 | Cord connector. Daniel Woodhead 3 wire NEMA L5-20 twist lock female located on cord for reel in [#LOC]. | 129 |
| 5130-0010 | Cord connector. Daniel Woodhead 4 wire NEMA L14-20 twist lock female located on cord for reel in [#LOC]. | 129 |
| 5130-0011 | Cord connector. Daniel Woodhead 3 wire NEMA L6-20 twist lock female located on cord for reel in [#LOC] | 129 |
| 5130-0012 | Junction box Circle-D with four (4) 3-wire NEMA L5-15 110 volt 15 amp twist lock receptacles. Located on cord for reel in [#LOC]. | 835 |
| 5130-0013 | Junction box Circle-D with four (4) 3-wire NEMA L5-20 110 volt 20 amp twist lock receptacles. Located on cord for reel in [#LOC]. | 835 |
| 5130-0014 | Circle D wall/floor mounting box. Mount at final or ship loose (customer preference). For use with reel located in or on [#LOC]. | 164 |
| 5130-0015 | Junction box Circle-D with two (2) 15 amp straight blade and two (2) 20 amp twist lock receptacles. Located on cord for reel in [#LOC]. | 1055 |
| 5130-0016 | Junction box Circle-D with all twist lock 2-120V and 2-240V outlets. Located on cord for reel in [#LOC]. | 1034 |
| 5130-0017 | Junction box Woodhead with four (4) NEMA L5-15 110 Volt 15 Amp twist lock receptacles. Located on cord for reel in [#LOC]. | 1660 |
| 5130-0018 | Junction box Daniel Woodhead with four (4) NEMA L5-20 110 volt 20 amp twist lock receptacles. Located on cord for reel in [#LOC]. | 1327 |
| 5130-0019 | Cord reel electric with 150' of 12/3 yellow cable. Locate [#LOC]. | 2127 |
| 5130-0024 | Electric cord reel rewind switch. Switch located [#LOC]. | 133 |
| 5130-0026 | Cord connector. Fire Power 3 wire 20A/110V female located on cord for reel in [#LOC]. | 669 |
| 5130-0027 | Cord connector. Duraline 4 wire 20A/220V female located on cord for reel in [#LOC]. | 176 |
| 5130-0028 | Rollers captive for cord reel mounted on reel. | 395 |
| 5130-0030 | Junction box Circle-D with one (1) straight blade and three (3) twist lock receptacles. Located on cord for reel in [#LOC]. | 1055 |
| 5130-0031 | Cord reel electric/manual back-up with 200' of 10/3 black cable. Crank handle mounted next to reel. Locate [#LOC] | 2911 |
| 5130-0032 | Cord reel electric with 150' of 10/4 yellow cable. Location [#LOC] | 3538 |
| 5130-0033 | Junction box Circle D with four (4) 3-wire NEMA 5-15 110 volt 15 amp straight blade receptacles. Located on cord for reel in [#LOC]. | 835 |
| 5130-0034 | Cord reel Akron electric with 200' of 10/3 yellow cable. Location(s): [#LOC]. | 2612 |
| 5130-0035 | Junction box Circle-D with (3) L5-15 and (1) L5-20 110Volt twist lock receptacles. Located on cord for reel in [#LOC]. | 835 |
| 5130-0037 | Cord reel Akron electric with 200' of 10/4 yellow cable. Location(s): [#LOC] | 3417 |
| 5130-0038 | Junction box Circle-D with (2) L5-20 twist lock and (2) 5-20 110Volt straight blade duplex receptacles. Located on cord for reel in [#LOC]. | 835 |
| 5130-0039 | Bracket for rollers. A support bracket for rollers shall be provided up high at compt opening for reel in [#LOC]. | 300 |
| 5130-0040 | Hannay PWM (Pulse Width Modulator) control for reel. Mounted next to switch for cord reel in [#LOC]. | 744 |
| 5130-0042 | Junction box Circle-D with four (4) 3-wire Nema 5-20 110Volt 20 Amp duplex receptacles. Located on cord for reel in [#LOC]. | 925 |
| 5130-0044 | Junction box Akron with (2) 5-20 125v 20 Amp duplex recepts and (2) L5-20 125v 20 Amp twist lock recepts. Located on cord for reel in [#LOC]. | 658 |
| 5130-0045 | Akron model EJB-VMT-TP mounting box. Locate box for use with reel in or on [#LOC]. | 321 |

| Item No. | Description | |
|---|---|---|
| 5130-0046 | Junction box Circle-D with one (1) 5-20 straight blade and three (3) L5-20 twist lock receptacles. Box wired as 240v with individual circuit breakers on box. Located on cord for reel in [#LOC]. | 1055 |
| 5130-0048 | Junction box Circle-D with (2) NEMA 5-20 120V GFCI duplex and (2) NEMA L6-20 220V twist lock receptacles. Located on cord for reel in [#LOC]. | 1055 |
| 5130-0049 | Cord reel electric for 200' of 10/3 cable. Cable not included. Location(s): [#LOC] | 2448 |
| 5130-0054 | Cord reel electric with 200' of 8/3 black cable. Locate [#LOC] | 4151 |
| 5130-0056 | Junction box Woodhead with (3) NEMA L5-15 110 Volt 15 Amp twist lock receptacles and (1) NEMA 5-20 110 Volt 20 Amp household receptacle. Located on cord for reel in [#LOC]. | 1660 |
| 5130-0057 | Mounting box for Woodhead junction box. Mount at final or ship loose (customer preference). For use with reel located in or on [#LOC]. | 300 |
| 5130-0059 | Junction box Circle-D with four (4) FirePower FP11 110Volt 20 Amp receptacles. Located on cord for reel in [#LOC]. | 1361 |
| 5130-0061 | Cord reel electric with 250' of 10/3 black cable. Locate [#LOC]. | 2859 |
| 5130-0062 | Junction box Circle-D with (2) 5-20 straight blade and (2) twist lock receptacles; (1) L5-20 and (1) L5-15. Located on cord for reel in [#LOC]. | 1055 |
| 5130-0063 | Cord reel electric with 200' of 12/3 black cable. Locate [#LOC]. | 2859 |
| 5130-0067 | Junction box Akron with (4) 5-20-GFCI 125v 20 Amp duplex recepts. Includes 12" pigtail with L14-20 connector and rubber feet. Located on cord for reel in [#LOC]. | 658 |
| 5130-0069 | Cord reel electric with 250' of 10/3 yellow cable. Locate [#LOC]. | 3250 |
| 5130-0070 | Cord connector. Hubbell 4 wire NEMA L14-20 twist lock female located on cord for reel in [#LOC] | 129 |
| 5130-0073 | Cord reel electric low profile with 200' of 10/3 yellow cable. Location(s): [#LOC]. | 3467 |
| 5130-0079 | Cord reel electric with 150' of 10/3 yellow cable. Location(s): [#LOC]. | 2511 |
| 5130-0080 | Junction box Circle-D with four (4) 3-wire NEMA L5-20 110 volt 20 amp GFCI twist lock receptacles. Located on cord for reel in [#LOC]. | 1055 |
| 5130-0081 | Cord reel electric model ECR 1620-17-18 with 200' of 10/4 yellow cable. Location [#LOC]. | 3538 |
| 5130-0082 | Cord connector. Daniel Woodhead 3 wire NEMA L5-30 twist lock female located on cord for reel in [#LOC]. | 181 |
| 5130-0083 | Slideout roller assembly for reel located in [#LOC]. | 1099 |
| 5130-0084 | Junction box Circle-D with one (1) 15 amp straight blade and three (3) 15 amp twist lock receptacles. Located on cord for reel in [#LOC]. | 1055 |
| 5130-0085 | Hannay nylon rollers on hinges of 1st open doors. | 332 |
| 5130-0086 | Hannay PWM (Pulse Width Modulator) control for reel. Mounted next to switch for hydraulic reel in L2. | 744 |
| 5130-0087 | Cord connector. Daniel Woodhead 4 wire NEMA L14-30 twist lock female located on cord for reel in [#LOC]. | 181 |
| 5130-0088 | Junction box Woodhead with two (2) NEMA L5-20 110V 20A twist lock and two (2) NEMA 5-20 110V 20A duplex receptacles. Located on cord for reel in [#LOC]. | 1507 |
| 5130-0094 | Cord reel electric with 200' of 10/3 black cable model ELFCR1622-14-16. Locate [#LOC]. | 2423 |
| 5130-0101 | Cord reel electric with 150' of 10/4 yellow cable. Reel to include strap (Comet) brake to provide drag pressure to reel axle. Location [#LOC] | 3626 |
| 5130-0102 | Junction box Circle-D with four (4) 3-wire 120Volt 20 Amp Hubbel model HBL7310B twist lock receptacles. Located on cord for reel in [#LOC]. | 1055 |
| 5130-0103 | Junction box Circle-D with four (4) 3-wire NEMA L5-20 110 volt 20 amp GFCI twist lock receptacles with 220V feed. Located on cord for reel in [#LOC]. | 1055 |
| 5130-0104 | Cord reel electric with 150' of 10/4 black cable. Location: [#LOC]. | 2231 |
| 5130-0105 | Cord reel electric CMW 6020 with 200' of 10/3 yellow cord. Location: [#LOC]. | 6621 |
| 5130-0107 | Cord reel electric with 200' of 12/3 yellow cable. Locate [#LOC]. | 2936 |
| 5130-0108 | Cord reel electric with 150' of 10/4 yellow cable. Reel has 3 conductor cover IPO 4 (for narrower reel). Location: [#LOC]. | 3538 |
| 5130-0109 | Junction box Circle D with four (4) 3-wire 20 amp receptacles two (2) twist lock NEMA L 5-20 and two (2) straight blade NEMA 5-20 receptacles. Located on cord for reel in [#LOC]. | 900 |
| 5130-0112 | Junction box Akron with (3) NEMA L5-20 GFCI twistlock and (1) NEMA L6-20 220V twist lock receptacle. Located on cord for reel in [#LOC]. | 771 |
| 5130-0115 | Junction box Akron with (2) NEMA L5-15 GFCI twistlock and (2) NEMA L14-20 120V/240V twist lock receptacle. Located on cord for reel in [#LOC]. | 771 |
| 5130-0116 | Optional Comet (friction) brake for Hannay cord reel (EA). | 83 |
| 5130-0120 | Cord reel electric painted black from manufacturer with 200' of 10/3 black cable. Locate [#LOC]. | 2423 |
| 5130-0122 | Cord connector. Hubbell 3 wire NEMA L5-15 twist lock female with yellow seal-tite cover located on cord for reel in [#LOC]. | 151 |
| 5130-0124 | Junction box Circle-D with (3) L5-20 twist lock and (1) 5-20 110V straight blade duplex receptacles. Located on cord for reel in [#LOC]. | 835 |
| 5130-0125 | Cord reel Hannay electric low profile with 200' of 10/3 black cable. Locate [#LOC]. | 3127 |
| 5130-0126 | Junction box Circle-D with (1) L5-20 twist lock and (3) 5-15 110Volt straight blade duplex receptacles. Located on cord for reel in [#LOC]. | 835 |

| Item No. | Description | |
|---|---|---|
| 5130-0127 | Cord reel electric with 175' of 10/3 yellow cable. Location [#LOC]. | 3538 |
| 5130-0131 | Cord reel electric Hannay model 1614-17-18 with 150' of 10/3 black cable. Location(s): [#LOC]. | 2211 |
| 5130-0132 | Cord reel electric Hannay model 1614-17-18 with 150' of 10/3 yellow cable. Location(s): [#LOC]. | 2302 |
| 5130-0133 | Cord reel electric Hannay model 1615-17-18 with 150' of 10/3 black cable. Location(s): [#LOC]. | 2404 |
| 5130-0137 | Cord reel electric low profile with 200' of 10/3 black cable; Hannay model ELFCR1636-10-11-6. Locate [#LOC]. | 2583 |
| 5130-0139 | Junction box Circle-D with two (2) 15 amp twist lock receptacles and two (2) 20 amp twist lock receptacles. Located on cord for reel in [#LOC]. | 1055 |
| 5130-0140 | Cord reel electric low profile with 200' of 10/3 yellow cable; Hannay model ELFCR1636-10-11-6. Locate [#LOC]. | 2908 |
| 5130-0141 | Junction box Circle-D with two (2) 15 amp straight blade and two (2) 15 amp twist lock receptacles. Located on cord for reel in [#LOC]. | 1055 |
| 5130-0142 | Air reel rewind switch. Switch located [#LOC]. | 133 |
| 5130-0143 | Junction box Woodhead with (1) NEMA 5-15 110V GFCI duplex receptacle (2) NEMA L5-20 110V GFCI twist lock receptacles and (1) NEMA L6-20 220V twist lock receptacle. Located on cord for reel in [#LOC]. | 1872 |
| 5130-0146 | Junction box Circle-D with two (2) 15 amp duplex receptacles and two (2) 20 amp duplex receptacles. Located on cord for reel in [#LOC]. | 1055 |
| 5130-0150 | Junction box Woodhead with (2) NEMA L5-20 110 Volt 20 Amp twist lock receptacles and (2) NEMA 5-20 110 Volt 20 Amp household receptacle. Located on cord for reel in [#LOC]. | 1660 |
| 5130-0151 | Cord reel low profile electric with 200' of 10/4 yellow cable. Location: [#LOC]. | 3729 |
| 5130-0152 | Junction box Akron with (2) 5-15 125v 15 Amp duplex recepts and (2) L5-15 125v 15 Amp twist lock recepts. Located on cord for reel in [#LOC]. | 658 |
| 5130-0154 | Cord reel electric (ECR 1613-19-20) with 150' of 10/3 yellow cable. Location(s): [#LOC]. | 2669 |
| 5150-0003 | Weldon auxiliary turn signal model 9186-8560 (PR). Location: [#LOC] | 234 |
| 5150-0006 | Whelen 600 series LED horizontal mount tail lights. Includes LED stop/tail arrow turn and halogen back-up lights with horizontal Cast 3 housing and weatherproof connectors. | 1518 |
| 5150-0007 | Whelen 600 series LED vertical mount tail lights. Includes LED stop/tail arrow turn and halogen back-up lights with vertical Cast 3 housing and weatherproof connectors. | 1483 |
| 5150-0008 | Whelen 600 series LED vertical mount tail lights. Includes LED stop/tail arrow turn and halogen back-up lights with vertical Cast 4 housing and weatherproof connectors. | 1814 |
| 5150-0015 | Whelen 600 series vertical mount taillights. Includes incandescent stop/tail arrow turn and halogen backup lights with vertical Cast 4 housing and weatherproof connectors. | 826 |
| 5150-0017 | License plate light LED with chrome housing located at the rear of the body. | 155 |
| 5150-0018 | Marker lights additional amber LED Trucklite Model 21 (PR). Location: [#LOC] | 198 |
| 5150-0019 | Marker lights addtional red LED Trucklite Model 21 (PR). Location: [#LOC] | 198 |
| 5150-0020 | Weldon model 1010 LED / incandescent tail lights. Includes red LED stop/tail/turn and clear incandescent back-up. | 428 |
| 5150-0023 | Weldon Model 1010 LED / incandescent tail lights. Includes red LED stop/tail amber LED turn and clear incandescent back-up. | 622 |
| 5150-0024 | Marker light LED body package. Commercial rescue bodies only. | 1259 |
| 5150-0027 | Marker light LED body/cab package. E-One custom cab and rescue bodies only. | 1874 |
| 5150-0032 | Bracket license plate at rear of body. | 46 |
| 5150-0035 | Trucklite LED taillights. Includes 4" red LED stop/tail amber LED turn and clear incandescent backup. | 754 |
| 5150-0036 | Truck-Lite LED tail lights. Includes 4" red LED stop/tail amber LED turn and clear LED back-up. | 957 |
| 5150-0037 | Zico backing light (PR) with white pained housing model #ZQL-RV-H7614. Location: [#LOC]. | 449 |
| 5150-0039 | Marker lights Britax amber/red rubber housed mounted on the rear body corners angled down. | 337 |
| 5150-0042 | Federal Signal LED tail lights. Includes 4" diameter red LED stop/tail amber turn and LED clear back-up. | 651 |
| 5150-0050 | Zico backing lights (PR) with polished stainless steel housing model ZQL-SS-H7614. Location: [#LOC]. | 693 |
| 5150-0052 | Code 3 65STK4 vertical mount tail lights. Includes red LED stop/tail amber LED turn and white LED back-up lights. | 2311 |
| 5150-0053 | Code 3 65PKG vertical mount tail lights. Includes red LED stop/tail amber arrow LED turn and white LED back-up lights. | 1882 |
| 5150-0056 | Whelen 600 series LED vertical mount tail lights. Includes LED stop/tail arrow turn and back-up lights with vertical Cast 3 housing and weatherproof connectors. | 2367 |
| 5150-0057 | Whelen 600 series LED vertical mount tail lights. Includes LED stop/tail arrow turn and back-up lights with vertical Cast 4 housing and weatherproof connectors. | 2698 |
| 5150-0058 | Federal Signal QuadraFlare LED vertical mount tail lights. Includes LED stop/tail arrow turn and back-up lights with vertical Cast 4 housing and weatherproof connectors. | 1480 |
| 5150-0059 | Federal Signal QuadraFlare LED vertical mount tail lights. Includes LED stop/tail arrow turn and back-up lights with vertical Cast 3 housing and weatherproof connectors. | 1292 |

| Item No. | Description | |
|---|---|---|
| 5150-0060 | Federal Signal QuadraFlare LED vertical mount tail lights. Includes LED stop/tail turn and back-up lights with vertical Cast 3 housing and weatherproof connectors. | 1413 |
| 5150-0062 | Federal Signal QuadraFlare LED horizontal mount taillights. Includes LED stop/tail arrow turn and backup lights with horizontal Cast 3 housing and weatherproof connectors. | 1504 |
| 5150-0063 | Double chrome trim ring for Weldon 1010 tail lights (PR). | 313 |
| 5150-0068 | Marker lights Britax LED amber/red rubber housed mounted on the rear body corners angled down. | 460 |
| 5150-0071 | Light Whelen model PSR00XRR LED (EA) red 3rd brake light. Location: [#LOC]. | 223 |
| 5150-0073 | Marker lights additional red LED Whelen Model 50R00MRR (PR). Location: [#LOC] | 286 |
| 5150-0074 | Marker lights additional amber LED Whelen Model 50A00MAR (PR). Location: [#LOC] | 286 |
| 5150-0075 | Whelen 600 series LED vertical mount taillights. Includes LED stop/tail arrow turn and backup lights with individual chrome flanges and weatherproof connectors. | 3198 |
| 5150-0076 | Whelen 700 LED auxiliary chevron turn signal (PR) with 15 degree castings. Location: [#LOC] | 836 |
| 5150-0077 | Whelen 900 series LED tail lights. Includes LED stop/tail arrow turn and back-up lights with weatherproof connectors. | 5767 |
| 5150-0080 | Weldon auxiliary turn signal model 9186-8580 LED (PR). Location: [#LOC]. | 319 |
| 5150-0081 | Light Whelen 500 model 5SR00XRR red LED 3rd brake light (ea). Location: [#LOC]. | 250 |
| 5150-0082 | Whelen 600 series LED vertical mount taillights. Includes LED stop/tail arrow turn in vertical Cast 3 housing with 900 series halogen backup lights down low and weatherproof connectors. | 1971 |
| 5150-0091 | Whelen M6 series LED vertical mount tail lights. Includes LED stop/tail arrow turn and back-up lights with vertical 4 light housing and weatherproof connectors. | 1877 |
| 5150-0098 | Truck-Lite auxiliary turn signal model 60117Y LED (PR) with model 60719 stainless steel cover. Location: [#LOC]. | 305 |
| 5150-0100 | Marker light LED body package. Commercial chassis with SS pumper body vehicles. | 904 |
| 5150-0101 | Whelen M9 series LED taillights. Includes LED stop/tail arrow turn and backup lights with weatherproof connectors. | 3939 |
| 5150-0102 | Whelen M6 series LED vertical mount tail lights. Includes LED stop/tail arrow turn and back-up lights with vertical 3 light housing and weatherproof connectors. | 1725 |
| 5150-0104 | Pair of dual headlights (Hi/Low) with bezel. Locate on extended front bumper as far outboard as possible (recess mounted to protect lights). Lights are IPO commercial chassis bumper mounted lighting. | 568 |
| 5150-0120 | Whelen 600 LED auxiliary arrow turn signal (PR) with 15 degree castings. Location: [#LOC]. | 762 |
| 5150-0122 | Marker lights addtional red LED Trucklite Model 15 (PR). Location: [#LOC]. | 118 |
| 5150-0123 | Marker lights addtional amber LED Trucklite Model 15 (PR). Location: [#LOC]. | 118 |
| 5150-0127 | Whelen M6 series LED vertical mount tail lights. Includes LED stop/tail arrow turn lights with vertical 3 light housing (PR) with M9LZC Super LED scene lights (PR) with chrome flanges and weatherproof connectors. | 2944 |
| 5150-0129 | Whelen M6 series LED horizontal mount tail lights. Includes LED stop/tail arrow turn and back-up lights individually mounted with weatherproof connectors. | 1725 |
| 5150-0130 | License plate light LED with chrome housing located at the rear of the body driver side down low. | 155 |
| 5150-0132 | Marker light LED body package. Commercial chassis with SS rescue body vehicles. | 918 |
| 5150-0133 | License plate light LED with chrome housing located at the rear of the body below B1 entry door. | 155 |
| 5150-0134 | License plate light incandescent with chrome housing located at the rear of the body. | 155 |
| 5150-0139 | Whelen M6 LED auxiliary arrow turn signal (PR) with 15 degree E-1 fabricated housing. Paint housing same color to be mounted to. Location: Rear wheel well off set rearward | 903 |
| 5150-0140 | Whelen M6 LED auxiliary arrow turn signal (PR) with 15 degree E-1 fabricated housing. Paint housing same color to be mounted to. Location: Centered over cab wheel well | 903 |
| 5150-0147 | Whelen 600 series LED vertical mount tail lights. Includes LED stop/tail arrow turn and halogen back-up lights with individual chrome flanges and weatherproof connectors. | 2315 |
| 5150-0148 | Bracket license plate at rear of body. Fabricated from .125" smooth plate aluminum painted job color. | 55 |
| 5150-0149 | License plate light incandescent with chrome housing located at the rear of the body below tailboard/body. | 64 |
| 5150-0150 | Weldon LED vertical mount tail lights. Includes LED stop taill turn and halogen back-up lights with vertical 4 housing and weatherproof connectors. | 2173 |
| 5150-0152 | Federal Signal QuadraFlare LED vertical mount tail lights. Includes LED stop/tail arrow turn and back-up lights with individual chrome bezels and weatherproof connectors. | 1227 |
| 5150-0154 | License plate light EON LED located at the rear of the body. | 129 |
| 5150-0155 | Whelen 600 series LED vertical mount taillights. Includes LED stop/tail arrow turn and backup lights with individual black flanges and weatherproof connectors. | 2587 |
| 5150-0156 | Marker lights Britax model L428 LED amber/red rubber housed (PR). Location: [#LOC]. | 460 |
| 5150-0158 | Whelen M6 series LED vertical mount tail lights with clear lenses. Includes LED stop/tail arrow turn and back-up lights with vertical 4 light housing and weatherproof connectors. | 1877 |
| 5150-0159 | License plate light EON LED located on front bumper. | 129 |

| Item No. | Description | |
|---|---|---|
| 5150-0160 | Marker lights Britax LED amber/red rubber housed mounted on the rear body corners angled up. | 460 |
| 5150-0161 | Weldon auxiliary turn signal and marker light model 9186-8580 LED (PR). Location: [#LOC]. | 319 |
| 5150-0162 | Weldon LED vertical mount tail lights. Includes LED stop taill turn and back-up lights with vertical 4 housing and weatherproof connectors. | 2640 |
| 5150-0163 | Whelen M6 series LED vertical mount tail lights. Includes LED stop/tail arrow turn and back-up lights individually mounted with weatherproof connectors. | 1725 |
| 5150-0164 | Whelen M6AC LED auxiliary turn signal (PR) with 15 degree E-1 fabricated housing and clear lens. Paint housing same color to be mounted to. Location: Centered over cab wheel well | 903 |
| 5150-0166 | Light Whelen M6 red LED 3rd brake light (ea). Location: [#LOC] | 314 |
| 5150-0167 | Weldon clearance light model 9186-8580 LED (PR). Low intensity only wired as steady on with marker light circuit. Location: (1) each side in body wheel well offset forward. | 319 |
| 5150-0168 | Whelen M6 series LED vertical mount tail lights. Includes LED stop/tail arrow turn and back-up lights individually mounted with black bezels and weatherproof connectors. | 1725 |
| 5150-0169 | License plate light LED with black housing located at the rear of the body. | 155 |
| 5150-0170 | Optronics 4" GloLight LED taillights. Includes red LED stop/tail amber turn and clear back-up. | 603 |
| 5150-0173 | Whelen M6 series LED vertical mount tail lights with clear lenses. Includes LED stop/tail arrow turn and back-up lights with vertical 3 light housing and weatherproof connectors. | 1725 |
| 5200-0000 | Breaker box 8 place single phase. Includes main breaker. Note: Main breaker occupies 2 places leaving 6 available. Locate [#LOC]. | 971 |
| 5200-0001 | Breaker box 12 place single phase. Includes main breaker. Note: If gen is 6KW or less main will occupy 2 places leaving 10 available. Locate [#LOC]. | 1014 |
| 5200-0002 | Breaker Box 20 Place Single Phase. Includes main breaker. Locate [#LOC]. | 1034 |
| 5200-0003 | Breaker box 2 place single phase (70A 110/220V). Location [#LOC]. | 432 |
| 5200-0006 | Breaker box 30 place three phase. Includes main breaker. Only for generator sizes 30 thru 60 KW. Location: [#LOC]. | 2422 |
| 5200-0007 | Breaker box 30 place single phase. Includes main breaker. Maximum generator size 48 KW. Location: [#LOC]. | 1601 |
| 5200-0008 | Breaker box 16 place single phase. Includes main breaker. Locate [#LOC]. | 1019 |
| 5200-0009 | Breaker box 8 place single phase; no main breaker. For use with multiple options wired through shoreline power with 30A or larger inlet recept. Locate adjacent to main breaker box. | 757 |
| 5200-0013 | Breaker Box 20 Place Single Phase. Includes main breaker. Locate inside forward body module centered on rear wall up high. Digital readout panel to be located next to breaker box. | 1034 |
| 5250-0003 | Generator Onan 6KW diesel. Requires fuel pick up option in chassis and 3rd party testing. Generator location: [#LOC]. | 17384 |
| 5250-0004 | Generator Onan 10KW diesel. Requires fuel pick up option in chassis and 3rd party testing. Generator location: [#LOC]. | 22193 |
| 5250-0005 | Generator Onan 6KW hydraulic. Includes generator control / PTO engage switch and a gauge panel located adjacent to breaker box. Generator location: [#LOC]. | 14869 |
| 5250-0006 | Generator Onan 8KW hydraulic. Includes generator control/PTO engage switch and a gauge panel located adjacent to circuit breaker box. Generator location: [#LOC]. | 16734 |
| 5250-0007 | Generator Onan 10KW hydraulic. Includes generator control / PTO engage switch and a gauge panel located adjacent to breaker box. Generator location: [#LOC]. | 17377 |
| 5250-0008 | Generator Harrison 15KW MPC hydraulic. Includes generator control / PTO engage switch and a gauge panel located adjacent to breaker box. Generator location: [#LOC]. | 28807 |
| 5250-0009 | Generator Harrison 20KW MPC hydraulic. Includes generator control / PTO engage switch and a gauge panel located adjacent to breaker box. Generator location: [#LOC]. | 31123 |
| 5250-0010 | Generator Winco 20KW single phase PTO driven for electronically controlled engine with automatic transmission. | 9290 |
| 5250-0012 | Generator Onan 15KW hydraulic. Includes generator control/PTO engage switch and a gauge panel located adjacent to circuit breaker box. Note: Generator is not compatible with an Amkus electric hyd tool power unit. Generator location: [#LOC]. | 25097 |
| 5250-0017 | Generator Honda EM5000SXK with 4.5KW continuous output. Generator location: [#LOC]. | 7038 |
| 5250-0026 | Generator Smart Power 10KW hydraulic model ER110. Includes generator control / PTO engage switch and a gauge panel located adjacent to breaker box. Generator location: [#LOC]. | 19822 |
| 5250-0027 | Generator Onan 25KW PTO. Single phase 120/240v. Includes PTO driveshaft main breaker gauge panel fast idle and frequency control for engine. | 10289 |
| 5250-0028 | Generator Onan 35KW PTO. Single phase 120/240v. Includes PTO driveshaft main breaker gauge panel fast idle and frequency control for engine. | 12308 |
| 5250-0035 | Onan 40kW PTO driven 3-phase generator. | 13433 |
| 5250-0037 | Generator Smart Power 8KW hydraulic model HR-8 (with top mount cooler). Includes generator control/PTO engagement switch and a gauge panel located adjacent to the circuit breaker box. Generator location: [#LOC]. | 18040 |
| 5250-0039 | Generator Harrison 10KW MCR hydraulic. Includes generator control / PTO engage switch and a gauge panel located adjacent to breaker box. Generator location: [#LOC]. | 18756 |

| Item No. | Description | |
|---|---|---|
| 5250-0040 | Generator Harrison 6KW MCR hydraulic. Includes generator control / PTO engage switch and a gauge panel located adjacent to breaker box. Generator location: [#LOC]. | 14609 |
| 5250-0042 | Generator Westerbeke 5KW diesel (model#5.0 BCDB). Requires fuel pick up option in chassis and 3rd party testing. Generator location: [#LOC]. | 17975 |
| 5250-0043 | Dealer installed generator. Option includes space only. Dealer responsible for NFPA required 3rd party generator testing. | 343 |
| 5250-0045 | Generator Harrison 30KW MPC hydraulic. Includes generator control / PTO engage switch and a gauge panel located adjacent to breaker box. Generator location: [#LOC]. | 38145 |
| 5250-0047 | Generator Smart Power 15KW hydraulic model HR-15 (with top mount cooler). Includes generator control / PTO engage switch and a gauge panel located adjacent to breaker box. Generator location: [#LOC]. | 26368 |
| 5250-0050 | Generator Smart Power 20KW hydraulic model HR-20 (with top mount cooler). Includes generator control / PTO engage switch and a gauge panel located adjacent to breaker box. Generator location: [#LOC]. | 28990 |
| 5250-0051 | Locate generator gauge panel on pump operators panel ipo next to breaker box | 139 |
| 5250-0052 | Lima Mac 60KW 120/208 VAC 3 phase Generator w/ T-Case. | 26531 |
| 5250-0054 | Generator Onan 7.5KW diesel. Requires fuel pick up option in chassis and 3rd party testing. Generator location: [#LOC]. | 15580 |
| 5250-0059 | Generator Onan 15KW PTO. Single phase 120/240v. Includes PTO driveshaft main breaker gauge panel fast idle and frequency control for engine. | 9574 |
| 5250-0060 | Dealer installed Onan 6KW diesel generator located [#LOC]. Option includes space only. Dealer responsible for NFPA required 3rd party generator testing. | 343 |
| 5250-0061 | Dealer installed Onan 6KW hydraulic generator located [#LOC]. Option includes space only. Dealer responsible for NFPA required 3rd party generator testing. | 343 |
| 5250-0062 | Dealer installed Onan 8KW hydraulic generator located [#LOC]. Option includes space only. Dealer responsible for NFPA required 3rd party generator testing. | 343 |
| 5250-0063 | Dealer installed Onan 10KW hydraulic generator located [#LOC]. Option includes space only. Dealer responsible for NFPA required 3rd party generator testing. | 343 |
| 5250-0064 | Dealer installed Onan 15KW hydraulic generator located [#LOC]. Option includes space only. Dealer responsible for NFPA required 3rd party generator testing. | 343 |
| 5250-0065 | Dealer installed Onan 20KW hydraulic generator located [#LOC]. Option includes space only. Dealer responsible for NFPA required 3rd party generator testing. | 343 |
| 5250-0066 | Dealer installed Smart Power 10KW hydraulic model ER110 generator located [#LOC]. Option includes space only. Dealer responsible for NFPA required 3rd party generator testing. | 343 |
| 5250-0067 | Dealer installed Smart Power 10KW hydraulic model HR110 generator located [#LOC]. Option includes space only. Dealer responsible for NFPA required 3rd party generator testing. | 343 |
| 5250-0068 | Dealer installed Smart Power 6KW hydraulic model HR-6 (with top mount cooler) generator located [#LOC]. Option includes space only. Dealer responsible for NFPA required 3rd party generator testing. | 343 |
| 5250-0069 | Dealer installed Smart Power 8KW hydraulic model HR-8 (with top mount cooler) generator located [#LOC]. Option includes space only. Dealer responsible for NFPA required 3rd party generator testing. | 343 |
| 5250-0070 | Dealer installed Smart Power 15KW hydraulic model HR-15 (with top mount cooler) generator located [#LOC]. Option includes space only. Dealer responsible for NFPA required 3rd party generator testing. | 343 |
| 5250-0071 | Dealer installed Smart Power 20KW hydraulic model HR-20 (with top mount cooler) generator located [#LOC]. Option includes space only. Dealer responsible for NFPA required 3rd party generator testing. | 343 |
| 5250-0072 | Dealer installed Harrison 6KW MCR hydraulic generator located [#LOC]. Option includes space only. Dealer responsible for NFPA required 3rd party generator testing. | 343 |
| 5250-0073 | Dealer installed Harrison 10KW MCR hydraulic generator located [#LOC]. Option includes space only. Dealer responsible for NFPA required 3rd party generator testing. | 343 |
| 5250-0074 | Dealer installed Harrison 30KW MPC hydraulic generator located [#LOC]. Option includes space only. Dealer responsible for NFPA required 3rd party generator testing. | 343 |
| 5250-0078 | Generator Smart Power 10KW hydraulic Liberator model Li15 (with top mount cooler and XRT hyd tool pump). Includes generator control / PTO engage switch and a gauge panel located adjacent to breaker box. Generator location: [#LOC]. | 30636 |
| 5250-0092 | Generator Honda EM5000SXK with 4.5KW continuous output. NFPA rated at 3.3KW. Generator location: [#LOC]. | 6377 |
| 5250-0106 | Westerbeke 10KW BTDAR diesel single phase generator and XRT Hydraulic tool system with 3 tool capability. 10500 PSI system. Includes selector valve for each reel hyd res / filter and remote cooler. Requires fuel pick up option in chassis and 3rd party testing. Locate in dunnage pan offset to officer side. Route (4) lead lines to B1 compt. | 53262 |

| Item No. | Description | |
|---|---|---|
| 5250-0108 | A Power Tech PTS-30 (30kw) diesel generator will be located in the pan over L1/R1. Locate the generator controls next to the breaker box. | 21151 |
| 5250-0109 | Generator Onan 20KW PTO. Single phase 120/240v. Includes PTO driveshaft main breaker gauge panel fast idle and frequency control for engine. | 9934 |
| 5250-0111 | Westerbeke 10KW BTDAR diesel single phase generator and XRT Hydraulic tool system with 2 tool capability. 10500 PSI system. Includes selector valve for each reel hyd res / filter. Requires fuel pick up option in chassis and 3rd party testing. Locate in [#LOC]. Route (4) lead lines to B1 compt. | 53262 |
| 5250-0115 | Generator Harrison 15KW MPC hydraulic w/IHT. Includes tool circuit manifold aux heat exchanger generator control / PTO engage switch and a gauge panel located adjacent to breaker box. [#LOC] | 38664 |
| 5250-0116 | Dealer installed Powertech 8KW diesel generator located [#LOC]. Option includes space only. Dealer responsible for NFPA required 3rd party generator testing. | 343 |
| 5250-0117 | Generator Harrison 8KW MAS hydraulic. Includes generator control/PTO engage switch and a gauge panel located adjacent to breaker box. Generator location: [#LOC]. | 18551 |
| 5250-0123 | Generator Honda EM4000 with 3.5KW continuous output. NFPA rated at 3.3KW. Generator location: [#LOC]. | 6377 |
| 5250-0125 | Generator Harrison 10KW LPG hydraulic. Includes generator control/PTO engage switch and a gauge panel located adjacent to breaker box. Generator location: [#LOC]. | 18756 |
| 5250-0128 | Generator Smart Power 15KW hydraulic Liberator model Li20 (with top mount cooler and XRT hyd tool pump). Includes generator control switch and a gauge panel located adjacent to breaker box. Generator location: [#LOC]. | 35756 |
| 5250-0130 | Generator Harrison 6KW MDS hydraulic w/IHT for continuous accessory. Includes aux hyd system manifold integral aux heat exchanger generator control / PTO switch aux system / PTO switch (both switches accessible by driver) and a generator gauge panel located adjacent to breaker box. Generator location: [#LOC]. | 29126 |
| 5250-0132 | Generator Harrison 8KW MDS hydraulic w/IHT for continuous accessory. Includes aux hyd system manifold integral aux heat exchanger generator control / PTO switch aux system / PTO switch (both switches accessible by driver) and a generator gauge panel located adjacent to breaker box. Generator location: [#LOC]. | 31333 |
| 5250-0134 | Generator Harrison 6KW LPG hydraulic with remote mounted reservoir. Includes generator control / PTO engage switch and a gauge panel located adjacent to breaker box. Generator location: [#LOC]. | 19164 |
| 5250-0135 | Generator Harrison 10KW MCR hydraulic w/IHT for continuous accessory. Includes aux hyd system manifold aux heat exchanger generator control / PTO switch aux system / PTO switch (both switches accessible by driver) and a generator gauge panel located adjacent to breaker box. Generator location: [#LOC]. | 29466 |
| 5250-0137 | Generator Harrison 10KW LPG hydraulic with remote reservoir. Includes generator control/PTO engage switch and a gauge panel located adjacent to breaker box. Generator location: [#LOC]. | 18756 |
| 5250-0138 | Generator Smart Power 20KW hydraulic Liberator model Li25 (with top mount cooler and XRT hyd tool pump). Includes generator control switch guarded PTO switch and a gauge panel located adjacent to breaker box. Generator location: [#LOC]. | 43630 |
| 5250-0140 | Generator (FOR US AIR FORCE ONLY) Onan 10KW diesel. Requires fuel pick up option in chassis and 3rd party testing. Generator location:[#LOC]. | 16430 |
| 5250-0142 | Generator Harrison 6KW LPG hydraulic. Includes generator control / PTO engage switch and a gauge panel located adjacent to breaker box. Generator location: [#LOC]. | 15717 |
| 5250-0143 | Generator Onan 8KW hydraulic 50 Hz. Includes generator control/PTO engage switch and a gauge panel located adjacent to circuit breaker box. Generator location: [#LOC]. | 17377 |
| 5250-0144 | Generator Harrison 12KW MCR hydraulic. Includes generator control / PTO engage switch and a gauge panel located adjacent to breaker box. Generator location: [#LOC]. | 19766 |
| 5250-0145 | Generator Harrison 6KW LPG hydraulic w/IHT. Includes tool system manifold aux heat exchanger generator control / PTO switch tool sytem / PTO switch (both switches accessible by driver) and a generator gauge panel located adjacent to breaker box. Generator location: [#LOC]. | 25362 |
| 5250-0147 | Generator Smart Power 10KW hydraulic Liberator model Li10 (with top mount cooler and compatible with an XRT pump). Includes generator control / PTO engage switch and a gauge panel located adjacent to breaker box. Generator location: [#LOC]. | 27986 |
| 5250-0150 | Generator Onan 12KW Quiet Diesel. Requires fuel pick up option in chassis and 3rd party testing. Generator location: To be installed by VanMor. | 19194 |
| 5250-0151 | Generator Harrison 6KW MAS hydraulic. Includes generator control/PTO engage switch and a gauge panel located adjacent to breaker box. Generator location: [#LOC]. | 14609 |
| 5250-0152 | Generator Harrison 10KW MAS hydraulic. Includes generator control/PTO engage switch and a gauge panel located adjacent to breaker box. Location: [#LOC] | 18756 |
| 5255-0000 | 3rd party generator testing without pump. | 779 |
| 5255-0001 | 3rd party generator test with pump. | 104 |

| Item No. | Description | |
|---|---|---|
| 5260-0000 | Generator air deflector for Onan hydraulic. When generator is compartment mounted or mounted in a pan on an aerial body engineering is to specify updraft or downdraft. | 508 |
| 5260-0001 | Remote start for diesel generator. Location: [#LOC]. | 479 |
| 5260-0002 | Remote control starting kit for Honda EM3800SX EM4000 EM5000SX and EM6500SX generators. Locate [#LOC]. | 827 |
| 5260-0004 | Generator prewire for dealer supplied and installed 5 KW portable generator. Includes 12 volt wiring and cable between breaker box. Prewire to [#LOC]. | 311 |
| 5260-0006 | Compartment door(s) of compartment mounted generator to have interlock. | 233 |
| 5260-0008 | Generator prewire for dealer supplied and installed 6.5KW portable generator. Includes 12volt wiring and cable between breaker box. Prewire to [#LOC]. | 381 |
| 5260-0017 | Compartment door(s) of compartment mounted compressor to have interlock. | 233 |
| 5260-0020 | Compartment door(s) of compartment mounted electric dump valve to have interlock. | 233 |
| 5260-0025 | Generator prewire for dealer supplied and installed 3.5 KW portable generator (Honda or other with equivalent dimensions). Includes 12 volt wiring and A/C cabling to breaker box. Prewire to [#LOC]. | 311 |
| 5260-0034 | Vertical exhaust for Harrison MCR and MPC generators 6KW - 20KW. | 588 |
| 5260-0037 | Generated auxiliary 12V power system wired through diesel generator. System includes (3) Power Max 100A 12V converters to power VMUX electrical system. Generator not included (engine off but ignition must be in "on" posiion). Requires Engineering review for generator and 12V power requirements. | 7364 |
| 5260-0040 | Generator digital display FRC FROG-D IPOS. Location: [#LOC]. | 1815 |
| 5260-0041 | Idle reduction system powered by a diesel generator. System includes (2) Power Max 100A 12V converters to power the vehicle electrical system. Requires diesel generator. Requires Engineering review for generator and 12V power requirements. | 4604 |
| 5260-0046 | Generator prewire for dealer supplied and installed 2KW portable generator. Includes 12 volt wiring and cable between breaker box. Prewire to [#LOC]. | 343 |
| 5260-0047 | Aesthetic shield for hydraulic generator on outboard end of dunnage pan. To be 3-sided open top and constructed from diamond plate. | 508 |
| 5260-0053 | Generator governor FRC FROG. Locate gauge panel on pump panel. | 4432 |
| 5260-0054 | Generator prewire for dealer supplied and installed 3KW portable generator. Includes 12 volt wiring and cable between breaker box. Prewire to [#LOC]. | 343 |
| 5260-0056 | APS: Auxiliary 12V Power System. System includes (1) 120A Power Max 12VDC converter to power VMUX electrical system load includes: Scene lights with body interior switch compartment lights step lights ground lights with body interior switch and 12VDC power distribution module in body interior electrical cabinet. Generator not included (chassis engine off with ignition in "on" position). Scene light and ground light switches to be panel mounted near body entry door. ***Requires Engineering review for generator and 12V power requirements. | 4635 |
| 5260-0058 | IRT. Generated auxiliary 12V power system wired through diesel generators. System includes (3) Power Max 100A 12V converters to power VMUX electrical system. Generators not included (engine off but ignition must be in "on" position). Requires Engineering review for generator and 12V power requirements. Commercial Chassis Command Vehicle only. | 10387 |
| 5300-0000 | Light bar Code 3 model XL5100 (PR) 22" Long. All red lens. Location: [#LOC] | 1413 |
| 5300-0003 | Light bar Code 3 model 556A3 56" long with all red lenses. Location: Centered on the front cab roof | 1944 |
| 5300-0004 | Light bar Code 3 model 718A1 (PR) 18" Long. Red Upper / Clear Lower lens. Location: [#LOC]. | 1593 |
| 5300-0015 | Light bars Federal Signal ADX2201 LED (PR) with red lenses. Location: [#LOC]. | 3520 |
| 5300-0017 | Light bar Federal Signal Jet Stream 48" LED with R/W/R lenses red diodes and single traffic clearing light. Location: Centered on the front cab roof | 2887 |
| 5300-0020 | Light bar Federal Signal JetStream JLX54HH 54" LED. Red Solaris reflectors with red domes each side and (2) center clear TCL lights. Location: Centered on the front cab roof. | 3212 |
| 5300-0021 | Light bar Federal Signal JetSolaris 60" LED. Red Solaris reflectors with clear domes. NFPA compliant. Does not require 2 addl side facing bars. Location: Centered on the front cab roof. | 3053 |
| 5300-0022 | Light bar Federal Signal 22I (EA). Location: [#LOC]. | 686 |
| 5300-0023 | Light bars Federal Signal 22I (PR). Location: [#LOC]. | 1276 |
| 5300-0024 | Light bar Federal Signal Aerodynic 25RQL-Fast 52" with red/clear lens. Location: Centered on the front cab roof. | 1770 |
| 5300-0026 | Light bar Federal Signal Aerodynic ADL5202 52" with red/clear/red lens. Location: Centered on the front cab roof. | 1673 |
| 5300-0028 | Light bar Federal Signal Aerodynic ADX5271 52" with 10 red Solaris LED reflectors. Location: Centered on the front cab roof | 3391 |
| 5300-0029 | Light bar Federal Signal AeroDynic ADX7201 72" with 8 red Solaris LED reflectors. Location: Centered on the front cab roof. | 3552 |
| 5300-0030 | Light bar Federal Signal Aerodynic AH1LC 72" with red/clear lens. Location: Centered on the front cab roof. | 2134 |

| Item No. | Description | |
|---|---|---|
| 5300-0031 | Light bar Federal Signal Aerodynic AH2LC 72" with red/clear lens. Location: Centered on the front cab roof | 2219 |
| 5300-0044 | Light bar Federal Signal Vector VC6001. Location: Centered on the front cab roof | 2504 |
| 5300-0047 | Light bar Whelen model 9M380NQ66 w/MKEZ7 mounts. Location: Centered on the front cab roof. | 3226 |
| 5300-0048 | Light bar Whelen Centurion model C300700N 72". Location: Centered on the front cab roof | 1971 |
| 5300-0049 | Light bar Whelen Edge model 9M380NV 66" with MKEZ7 mounts. Location: Centered on the front cab roof | 3691 |
| 5300-0050 | Light bar Whelen Edge model 9M387NQ 72" with MKEZ7 mounts without rear facing strobes. N/A on INTL Chassis. Location: Centered on the front cab roof | 3394 |
| 5300-0051 | Light bar Whelen model 9M387NV 72" all strobe with MKEZ7 mounts. N/A with Vista roof with front facing windows. N/A on INTL Chassis. Location: Centered on the front cab roof | 3394 |
| 5300-0052 | Light bar Whelen Edge model 9MINNFPA 28 1/4" with MK9 mounts. All strobe light bar. Location: [#LOC] | 3438 |
| 5300-0053 | Light bar Whelen Freedom model FN66QLED 66" with MKEZ7 mounts. All LED light bar without rear facing LEDs. Location: Centered on the front cab roof. | 4371 |
| 5300-0055 | Light bar Whelen Freedom model FN72QLED 72" LED with MKEZ7 mounts and clear lenses. Location: Centered on the front cab roof. | 4483 |
| 5300-0056 | Light bar Whelen Freedom model FN72VLED 72" LED with MKEZ7 mounts. N/A INTL Chassis or Vista roofs with front facing windows. Location: Centered on the front cab roof. | 4483 |
| 5300-0059 | Light bar Whelen model 9MINNFPA 28 1/4" strobe with MKEZ7 mounts (PR). Location: [#LOC] | 3438 |
| 5300-0060 | Light bar Code 3 model 574NFPA1 74" with all red lenses. Location: Centered on the front cab roof. | 2248 |
| 5300-0065 | Light bar Federal Signal ADX2202 LED (PR) with red lenses. Located side facing only. Not NFPA compliant forward facing. Location: [#LOC]. | 2183 |
| 5300-0070 | Light bar Federal Signal JetStream JLX5401 LED 54". Red Solaris reflectors with red domes. Location: Centered on the front cab roof | 2614 |
| 5300-0074 | Whelen Mini-Freedom LED light bars (PR) model FNMINI 24" with red/clear lenses and low profile MK9 mounts. Location: [#LOC]. | 5070 |
| 5300-0076 | Whelen Mini-Freedom LED side facing light bars (PR) model FT8RRRRF 24" with low profile MK9 mounts. Location: [#LOC]. Lense colors: Clear. | 4857 |
| 5300-0084 | Whelen Mini-Freedom LED light bars (PR) model FNMINI 24" with red/clear lenses and MKEZ7 mounts. Location: [#LOC]. | 5070 |
| 5300-0086 | Light bar Code 3 MX model 758A1. Upper deck contains (4) rotators (2 ea side) with red lenses and (2) clear oscilasers. Lower deck contains (2) frt red halogen flashers outboard intersection sweeps and clear lenses. Loc: Centered on the frt cab roof. | 2169 |
| 5300-0088 | Light bar Whelen Freedom model FN55VLED 55" LED with MKEZ7 mounts. N/A with Vista roofs with front facing windows. Location: Centered on the front cab roof. | 3960 |
| 5300-0089 | Light bar Code 3 MX model 769A1. Upper deck contains 9 rotators w/ red lenses. Lower deck contains intersection sweeps w/clear lenses. Location: Centered on the front cab roof. | 2246 |
| 5300-0091 | Light bar Code 3 Excalibur model X58A. Upper deck contains (4) rotators (two ea side) with red lenses and (2) white oscilasers with clear lenses. Lower deck contains (4) takedown lights and two alley lights. Location: Centered on the front cab roof. | 2463 |
| 5300-0092 | Light bar Whelen Freedom model FN55QLED 55" LED with takedown lights MKEZ7 mounts and clear lenses. Location: Centered on the front cab roof. | 4291 |
| 5300-0093 | Light bar Whelen Freedom model FN72VLED 72" LED with Opticom and MKEZ7 mounts. N/A INTL Chassis or Vista roofs with front facing windows. Location: Centered on the front cab roof. | 7503 |
| 5300-0094 | Light bar Federal Signal 22I (ADL2201Y) with 175 FPM rotators (PR). Location: [#LOC] | 1276 |
| 5300-0095 | Light bar Code 3 MX model 769 with R/C/C/C/B lenses. Upper deck contains 9 rotators. Lower deck contains intersection sweeps w/clear lenses. Location: Centered on the front cab roof. | 2246 |
| 5300-0096 | Light bar Code 3 Javelin LED model JX67A. Location: Centered on the front cab roof. | 7539 |
| 5300-0100 | Light bar Whelen Freedom model FN72QLED 72" LED with clear lenses and MKEZ7 mounts. Includes (8) red LED and (2) white LED. N/A INTL Chassis. Location: Centered on the front cab roof. | 4982 |
| 5300-0101 | Light bar Federal Signal Aerodynic ADL5202 52" with blue lenses. Location: Centered on the front cab roof. | 1673 |
| 5300-0103 | Light bar Whelen Freedom model FN66QLED 66" LED with 795H Opticom takedown lights and MKEZ7 mounts. Location: Centered on the front cab roof. | 6186 |
| 5300-0104 | Light bar Whelen Freedom model FN66QLED 66" with MK9 mounts. All LED light bar without rear facing LEDs. Location: Centered on the front cab roof. | 4371 |
| 5300-0105 | Light bar Code 3 model 718A1 (PR) 18" Long. Red upper/clear lower lens driver side and blue upper/clear lower officer side. Location: [#LOC] | 1378 |
| 5300-0106 | Light bar Code 3 MX model 769 with B/B/C/R/R upper lenses clear lower lenses. Upper deck contains (8) rotators; (4) each side and alley lights. Lower deck contains intersection sweeps (4) LED warning; (2) blue driver and (2) red officer. Includes pre-wire for opticom in the center of the upper deck. Location: Centered on the front cab roof. Requires 5300-0105. | 4030 |

| Item No. | Description | |
|---|---|---|
| 5300-0113 | Light bar Whelen Freedom model FL2RRRRF 72" LED with MKEZ7 mounts. Includes (10) red LEDs and (4) blue LEDs. N/A INTL Chassis. Location: Centered on the front cab roof. | 5981 |
| 5300-0117 | Light bar Code 3 model 729A (PR) 29" long. Red upper / clear lower lens. Location: [#LOC] | 4038 |
| 5300-0118 | Light bar Code 3 MX model 769A with R/W/W/W/R upper lenses and clear lower lenses. Upper deck contains (6) rotators and 3-M Opticom. Lower deck contains intersection sweeps (6) red LED warning and (4) white LED warning. Location: Centered on the front cab roof. | 8360 |
| 5300-0126 | Light bar Whelen Freedom model FN72VLED 72" LED with 795H Opticom (12) red LEDs (2) clear LEDs and MKEZ7 mounts. N/A INTL Chassis or Vista roofs with front facing windows. Location: Centered on the front cab roof. | 9180 |
| 5300-0129 | Light bar Federal Signal ADX2205 LED (PR). Location: [#LOC] | 6061 |
| 5300-0130 | Light bar Whelen Freedom model FN82VLED 82" LED with 3M Opticom and MKEZ7 mounts. N/A INTL Chassis or Vista roofs with front facing windows. Location: Centered on the front cab roof | 7165 |
| 5300-0136 | Light bar Federal Signal 22I (PR) red/blue lenses. Location: [#LOC] | 1276 |
| 5300-0137 | Light bar Whelen Freedom model FN72VLED 72" LED with Opticom and MKEZ7 mounts. Includes (10) red LED and (2) white LED. N/A INTL Chassis. Location: Centered on the front cab roof. | 8503 |
| 5300-0141 | Light bar Code 3 model 574A1 74" with all red lenses. Location: Centered on the front cab roof. | 2538 |
| 5300-0142 | Light bar Federal Signal JetStream 60" LED. Red/White Solaris reflectors with clear domes. NFPA Compliant does not require 2 addl side facing bars. Location: Centered on the front cab roof. | 3233 |
| 5300-0144 | Light bar Whelen Edge model 9M387NQ 72" with MKEZ7 mounts pre-wire for Opticom and without rear facing strobes. N/A on INTL Chassis. Location: Centered on the front cab roof | 3709 |
| 5300-0146 | Light bar Whelen Freedom model FN72QLED 72" LED with MKEZ7 mounts. Includes (6) red LED (2) blue LED and (2) white LED. N/A INTL Chassis. Location: Centered on the front cab roof. Lens color: Clear. | 4982 |
| 5300-0148 | Light bar Whelen model 9MMEDFFD 28 1/4" strobe with MK9 mounts (PR). Lense colors to be RRCR (front to rear). Location: [#LOC] | 3149 |
| 5300-0151 | Light bar Whelen Freedom model FN66VLED 66" with MKEZ7 mounts. All LED light bar. Location: Centered on the front cab roof | 4371 |
| 5300-0152 | Light bar Whelen Freedom model FN72QLED 72" LED with Opticom and MKEZ7 mounts. Includes (6) red LED (4) Blue LED and (2) white LED. N/A INTL Chassis. Location: Centered on the front cab roof. | 8469 |
| 5300-0154 | Light bar Federal Signal JetStream 60'' LED. Red Solaris reflectors and red domes with clear center and 3M 792 Opticom. NFPA Compliant does not require 2 addl side facing bars. Location: Centered on the front cab roof | 7816 |
| 5300-0157 | Whelen Mini-Freedom LED light bars (PR) model FNMINI 24" with clear lenses and MKEZ7 mounts. Location: [#LOC]. | 5070 |
| 5300-0158 | Light bar Whelen Freedom model FN72QLED 72" LED with 3M Opticom clear lenses and MKEZ7 mounts. N/A INTL Chassis. Location: Centered on the front cab roof. | 7249 |
| 5300-0159 | Light bar Federal Signal ADX7202 72" with (6) red (2) white Solaris LED reflectors and 3M Opticom. Location: Centered on the front cab roof | 6125 |
| 5300-0160 | Light bar Federal Signal JetSolaris 60" LED. Red Solaris reflectors with center traffic clearing light. NFPA compliant does not require 2 addl side facing bars. Location: Centered on the front cab roof. | 3146 |
| 5300-0161 | Light bar Whelen Freedom model FN72VLED 72" LED with Opticom and MKEZ7 mounts. Includes (10) red LED (2) white LED and (2) green LED. N/A INTL Chassis. Location: Centered on the front cab roof. | 9430 |
| 5300-0163 | Light bar Whelen Freedom model FN72VLED 72" LED with offset Opticom and MKEZ7 mounts. N/A INTL Chassis or Vista roofs with front facing windows. Location: Centered on the front cab roof. | 7503 |
| 5300-0166 | Light bar Whelen Freedom model FN60VLED 60" LED with MKEZ7 mounts. N/A on Vista roofs with front facing windows. Location: Centered on the front cab roof | 5626 |
| 5300-0169 | Light bar Whelen Freedom model FN72QLED 72" LED with red lenses and MKEZ7 mounts. Includes (8) red LED and (2) white LED. N/A INTL Chassis. Location: Centered on the front cab roof. | 4982 |
| 5300-0171 | Light bar Federal Signal Aerodynic ADL5202 52" with driver red and officer blue lenses. Location: Centered on the front cab roof. | 1673 |
| 5300-0173 | Light bar Whelen Freedom model FN72VLED 72" LED with MK8 high mounts. Includes (12) red LED (2) amber LED and (4) white LED. N/A INTL Chassis or Vista roofs with front facing windows. Location: Centered on the front cab roof. | 7267 |
| 5300-0174 | Light bar Whelen Freedom model FN82VLED 82" LED with MKEZ7 mounts and red lenses. Includes (1) driver forward facing steady burn to meet California law. N/A INTL Chassis or Vista roofs with front facing windows. Location: Centered on the front cab roof | 5294 |
| 5300-0176 | Light bar Whelen Freedom model FN72QLED 72" LED with MK8 high mounts. N/A INTL Chassis. Location: Centered on the front cab roof. | 4483 |
| 5300-0180 | Light bar Federal Signal Escape LED model ESC 2202-NFPA (PR). Red / white with clear lenses. Location: [#LOC]. | 3944 |

| Item No. | Description | |
|---|---|---|
| 5300-0182 | Light bar (PR) Federal Signal Escape LED model ESC 2201P-NFPA (driver side) and ESC 2201D-NFPA (officer side). Red / white with clear lenses. Side facing only - not for use at front cab corners. Location: [#LOC]. | 3741 |
| 5300-0185 | Light bar Whelen Freedom model FN72QLED 72" LED with clear lenses MKEZ7 mounts and pre-wire for 3M opticom. Includes (8) red LED and (2) white LED. N/A INTL Chassis. Location: Centered on the front cab roof | 5072 |
| 5300-0186 | Light bar Whelen Freedom model FN72QLED 72" LED with pre-wire for 3M Opticom and MKEZ7 mounts. N/A INTL Chassis. Location: Centered on the front cab roof | 4778 |
| 5300-0187 | Light bar Whelen Freedom model FN72QLED 72" LED with clear lenses and MKH8 high mounts. Includes (8) red LED and (2) white LED. N/A INTL Chassis. Location: Centered on the front cab roof | 5032 |
| 5300-0188 | Light bar Whelen Freedom model FN72VLED 72" LED with Opticom and MK8 high mounts. N/A INTL Chassis or Vista roofs with front facing windows. Location: Centered on the front cab roof. | 7555 |
| 5300-0189 | Light bar Federal Signal ADX2201 LED with red lenses. Location: Centered on the front cab roof. Requires additional corner lightbars for NFPA compliance. | 1763 |
| 5300-0190 | Light bar Whelen Freedom model FN72QLED 72" LED with Opticom and MK8 high mounts. Includes (6) red LED (4) Blue LED and (2) white LED. N/A INTL Chassis. Location: Centered on the front cab roof. | 8519 |
| 5300-0192 | Light bar Code 3 Model XP9588NFPA1 88" LED. All red with clear lenses. Not available on commercial cabs. Location: Centered on the front cab roof. | 5551 |
| 5300-0195 | Light bar Federal Signal JetStream 60" LED. Red driver/Blue officer Solaris reflectors. Location: Centered on the front cab roof | 2678 |
| 5300-0196 | Whelen Mini-Freedom LED light bars (PR) model FNMINI 24" with red lenses and MK8 high mounts. Location: [#LOC]. | 5197 |
| 5300-0197 | Light bar Whelen Freedom model FN72QLED 72" LED with GTT Opticom red lenses and MKH8 high mounts. N/A INTL Chassis. Location: Centered on the front cab roof. | 7307 |
| 5300-0198 | Light bar Federal Signal ADX2215-SMV LED side facing (PR) with driver blue forward/red rearward and officer red forward/blue rearward facing lenses. Location: [#LOC]. | 4967 |
| 5300-0199 | Light bar Whelen Freedom model FL2RRRR 72" LED with Opticom and MKEZ7 mounts. Includes (12) red LED. N/A INTL Chassis. Location: Centered on the front cab roof. | 8473 |
| 5300-0202 | Light bar Weldon Aero Maxx II 59" LED. NFPA Compliant does not require 2 addl side facing bars. Location: Centered on the front cab roof | 3479 |
| 5300-0203 | Light bar Whelen Freedom model FN72QLED 72" LED with 3M 795H Opticom (10) red LEDs (2) clear LEDs and MK8 high mounts. For use with front vista windows. Location: Centered on the front cab roof. | 8474 |
| 5300-0210 | Whelen Mini-Freedom LED light bars (PR) model FNMINI 24" with red/clear lenses and MK8 high mounts. Location: [#LOC]. | 5197 |
| 5300-0211 | Light bar Whelen Freedom model FN60QLED 60" LED with MKEZ7 mounts. Includes (8) red (2) white and (2) amber modules. Location: Centered on the front cab roof | 5734 |
| 5300-0212 | Light bar Whelen Freedom model FN72VLED 72" LED with MKEZ7 mounts. Includes (10) red LED and (4) white LED. N/A INTL Chassis. Location: Centered on the front cab roof. | 5830 |
| 5300-0213 | Light bar Code 3 MX model 769NFPA1 with Opticom. Upper deck contains 5 rotators w/ red lenses. Lower deck contains 795H Opticom and intersection sweeps w/clear lenses. Location: Centered on the front cab roof. | 3767 |
| 5300-0214 | Light bar Whelen Freedom model FN72QLED 72" LED with GTT Opticom clear lenses and MKH8 high mounts. N/A INTL Chassis. Location: Centered on the front cab roof | 7307 |
| 5300-0215 | Light bar Whelen Freedom model FL2RRRRF 72" LED with MK8H high mounts. Includes (10) red LEDs and (4) blue LEDs. N/A INTL Chassis. Location: Centered on the front cab roof. | 6038 |
| 5300-0216 | Light bar Whelen Freedom 72" LED with (8) red LEDs (2) white LEDs side facing LR11 alley lights 3M Opticom clear lenses and MKEZ7 mounts. N/A INTL Chassis. Location: Centered on the front cab roof | 7625 |
| 5300-0217 | Light bar Federal Signal AeroDynic ADX7205 72" with 12 red Solaris LED reflectors and 2 traffic clearing lts. Location: Centered on the front cab roof. | 4105 |
| 5300-0219 | Light bar Whelen Freedom model FL2RRRR 72" LED with MKEZ7 mounts and clear lenses. Includes (12) red LEDs (2) clear LEDs and GTT Opticom. N/A INTL Chassis and vista cabs. Location: Centered on the front cab roof. | 7459 |
| 5300-0220 | Light bar Whelen Freedom 82" LED with MKEZ7 mounts and clear lenses. Includes (14) red LEDs and (2) LR11Takedown lights . N/A commercial Chassis. Location: Centered on the front cab roof | 6322 |
| 5300-0234 | Light bar Whelen model 45B38 38" LED. Location: Centered rear body above directional lightbar. | 2232 |
| 5300-0237 | Light bar Whelen Freedom model FN66QLED 66" with 3M 9592 Opticom (switched on dash panel) and MKEZ7 mounts. All LED light bar without rear facing LEDs. Driver side red lights and officer side to be blue (standard white center) Location: Centered on the front cab roof. | 6476 |
| 5300-0247 | Light bar Federal Signal ADX2201 LED (PR) red with clear lenses. Location: [#LOC]. | 3520 |

| Item No. | Description | |
|---|---|---|
| 5300-0251 | Light bar Whelen Freedom model FN72QLED 72" LED with clear lenses Opticom and MKEZ7 mounts. Includes (7) red LED (3) blue LED and (2) white LED. N/A INTL Chassis. Location: Centered on the front cab roof. | 7743 |
| 5300-0252 | Light bar Whelen Freedom model FN72QLED 72" LED red/blue with MKEZ7 mounts and clear lenses. N/A INTL Chassis. Location: Centered on the front cab roof | 4483 |
| 5300-0256 | Light bar Whelen Freedom model FN72QLED 72" LED with MKEZ7 mounts. Includes (4) red LED (4) blue LED and (2) white LED. N/A INTL Chassis. Location: Centered on the front cab roof | 4982 |
| 5300-0257 | Light bar Whelen Freedom model FN72QLED 72" LED with MKEZ7 mounts. Includes (1) driver forward facing steady burn to meet California law. N/A INTL Chassis. Location: Centered on the front cab roof. | 4483 |
| 5300-0260 | Light bar Whelen Freedom 66" LED with 3M Opticom red lenses and MKEZ7 mounts. Includes (10) red LED and (2) LR11 dual alley lights. Location: Centered on the front cab roof. | 7076 |
| 5300-0261 | Light bar Federal Signal Legend. (2) 24" light bars LED side facing only. Lenses color: clear. Location: [#LOC]. | 4086 |
| 5300-0267 | Light bar Whelen Justice model JE2NFPA 56" LED with clear lenses and MKEZ7 mounts. N/A on Vista roofs with front facing windows. Includes (4) red corner facing LIN6 LED lights (6) forward facing CON3 Linear LED lights; (4) red (2) white. Location: Centered on the front cab roof. | 2675 |
| 5300-0269 | Light bar Whelen Freedom model FN60VLED 60" LED with clear lenses and MKEZ7 mounts. Includes (6) red (2) white (4) blue modules and GTT Opticom. Location: Centered on the front cab roof. | 6852 |
| 5300-0271 | Light bar Whelen Freedom model FN72QLED 72" LED red/blue with MK8 high mounts. N/A INTL Chassis. Location: Centered on the front cab roof | 4541 |
| 5300-0277 | Light bar Whelen Freedom model FN72VLED 72" LED with MK8 mounts. N/A INTL Chassis or Vista roofs with front facing windows. Location: Centered on the front cab roof. | 4540 |
| 5300-0283 | Light bar Whelen Freedom model FN72QLED 72" LED with MKEZ7 mounts. Includes (4) red LED (4) blue LED and (2) white LED. N/A INTL Chassis. Location: Centered on the front cab roof | 4982 |
| 5300-0284 | Light bar Whelen Freedom model FN82VLED 82" LED with MKEZ7 mounts and clear lenses. Includes (12) red (4) white LEDs. N/A commercial Chassis. Location: Centered on the front cab roof | 6699 |
| 5300-0287 | Light bar Whelen Freedom model FN82VLED 82" LED with MKEZ7 mounts and clear lenses. Includes (14) red (4) white LEDs. N/A commercial Chassis. Location: Centered on the front cab roof | 7086 |
| 5300-0289 | Light bar Whelen Freedom model FN72QLED 72" LED with MKEZ7 mounts. Includes (5) red LED (5) blue LED and (4) white LED. N/A INTL Chassis. Location: Centered on the front cab roof | 5972 |
| 5300-0294 | Light bar Whelen Freedom model FN72QLED 72" LED with MK8H mounts. Centered on the front cab roof. | 4422 |
| 5300-0295 | Light bar Whelen Freedom model FN72QLED 72" LED with 3M Opticom clear lenses and MKH8 mounts. N/A INTL Chassis. Location: Centered on the front cab roof. | 7249 |
| 5300-0296 | Light bar Whelen Freedom model FN72QLED 72" LED with MKEZ7 mounts. Includes (12) red LED and (2) white LED. N/A INTL Chassis. Location: Centered on the front cab roof | 5972 |
| 5300-0297 | Light bar Whelen Freedom model FN66QLED 66" with MKEZ7 mounts. All LED light bar without rear facing LEDs. Driver side red LED officer blue LED. Location: Centered on the front cab roof. | 4371 |
| 5300-0298 | Light bar Whelen Freedom model FN72QLED 72" LED with MKEZ7 mounts. Location: Centered on the front cab roof. | 4483 |
| 5300-0300 | Light bar Whelen Freedom model FN72QLED 72" LED with 3M Opticom clear lenses and MKEZ7 mounts. N/A INTL Chassis. Location: Centered on the front cab roof. | 7249 |
| 5300-0301 | Light bar Whelen Freedom model FN72QLED 72" LED with Opticom and MK8 high mounts. Includes (8) red LED and (4) white LED with red/clear lenses. N/A INTL Chassis. Location: Centered on the front cab roof. | 7035 |
| 5300-0302 | Light bar Federal Signal Split Vision VSLR8-NFPA1. Two (2) 26.5" 4-pod light bars w/ (3) red and (1) multi-color pods on each bar with red/clear lenses. Location: [#LOC]. | 4638 |
| 5300-0303 | Light bar Whelen Freedom model FN66QLED 66" with MKEZ7 mounts. Includes (10) red LED with red lenses and (2) white LED with clear lenses. Location: Centered on the front cab roof. | 5216 |
| 5300-0305 | Light bar Whelen Freedom model FN55QLED 55" LED with driver red/officer blue LEDS takedown lights and MKEZ7 mounts. Location: Centered on the front cab roof. | 4291 |
| 5300-0306 | Light bar Federal Signal JetSolaris 60" LED. Red and blue Solaris reflectors with center traffic clearing light. NFPA Compliant does not require 2 addl side facing bars. Location: Centered on the front body mounted to the roof with no upper body or mounted on a bracket in front of the body with 13" upper body. | 3146 |
| 5300-0307 | Light bar Whelen Freedom model FN72QLED 72" LED with clear lenses Opticom and MKEZ7 mounts. Includes (10) red LED and (2) white LED. N/A INTL Chassis. Location: Centered on the front cab roof. | 7743 |
| 5300-0309 | Whelen Mini-Freedom LED side facing light bars (PR) model FNMINI 24" with red/blue LED and MKEZ7 mounts. Location: [#LOC]. Lens colors: Clear. | 4857 |

| Item No. | Description | |
|---|---|---|
| 5300-0310 | Light bar Whelen Freedom model FN72VLED 72" LED with Opticom and MK8H high mounts. Includes (10) red LED (2) white LED and (2) blue LED. N/A INTL Chassis. Location: Centered on the front cab roof. | 7672 |
| 5300-0313 | Light bar Federal Signal ADX2205 LED (PR) red/clear. State of Maryland only. Location: [#LOC]. | 6061 |
| 5300-0314 | Light bar Federal Signal Legend. (2) 24" light bars LED. Lenses color: clear. (1) Model number LGD24Z-00019 and (1) model number LGD24Z-00020. Location: [#LOC]. | 2387 |
| 5300-0318 | Light bar risers (PR) for the light bars installed on the top of the cab to insure 360 degree visibility. The riser shall raise the as mounted light bar(s) approximately 4" to prevent interference with the brow lighting (if so equipped) and ensure 360 degree visibility is maintained. | 222 |
| 5300-0319 | Light bar Whelen Freedom model FN60VLED 60" LED with MK8H mounts. N/A on Vista roofs with front facing windows. Location: Centered on the front cab roof | 5700 |
| 5300-0320 | Light bar Whelen Freedom model FN72QLED 72Light bar Whelen Freedom model FN72QLED 72" LED with MKEZ7 mounts. Includes (10) red LED (4) blue. Location: Centered on the front cab roof. | 5053 |
| 5300-0325 | Light bar Whelen Freedom model FN72VLED 72" LED with 795H Opticom (12) red LEDs (2) clear LEDs and MK8H mounts. N/A INTL Chassis or Vista roofs with front facing windows. Location: Centered on the front cab roof. | 9229 |
| 5300-0326 | Light bar Whelen Freedom model FN72QLED 72" LED with GTT Opticom clear lenses and MK8H mounts. Includes (3) red LED (3) blue LED and (2) white LED. N/A INTL Chassis. Location: Centered on the front cab roof. | 7304 |
| 5300-0329 | Light bar Whelen Freedom model FN55QLED 55" LED with driver red/officer blue LEDS takedown lights and MKEZ7 mounts. Location: Centered on the front cab roof. | 4291 |
| 5300-0331 | Light bar Federal Signal JetSolaris 60" LED. Clear/white Solaris reflectors with red domes. NFPA compliant. Does not require 2 addl side facing bars. Location: Centered on the front cab roof. | 3053 |
| 5300-0332 | Light bar Whelen Freedom model FN72QLED 72" LED with MKEZ7 mounts. Includes (6) red (4) blue and (4) white Super LED modules. Lens color to be R/R/B/W/B/R/W/W/R/B/W/B/R/R Location: Centered on the front cab roof. | 5871 |
| 5300-0334 | Light bar Whelen Freedom model FN72QLED 72" LED GTT Opticom and clear lenses MKEZ7 mounts. Includes (8) red LED and (2) white LED. N/A INTL Chassis. Location: Centered on the front cab roof | 6399 |
| 5300-0340 | Light bar Whelen Freedom model FN72QLED 72" LED GTT Opticom with MKEZ7 mounts. Includes (4) red LED (4) blue LED and (2) white LED. N/A INTL Chassis. Location: Centered on the front cab roof | 6399 |
| 5300-0343 | Light bar Whelen Freedom model FN72QLED 72" LED with clear lenses MKEZ7 mounts and pre-wire for 3M opticom. Includes (3) red LED (3) blue LED and (2) white LED. N/A INTL Chassis. Location: Centered on the front cab roof | 4283 |
| 5300-0344 | Light bar Whelen Justice model JE0NFPA 62" LED with clear lenses and MKEZ7 mounts. N/A on Vista roofs with front facing windows. Includes (4) red corner facing LIN6 LED lights (6) forward facing CON3 Linear LED lights; (4) red (2) white. Location: Centered on the front cab roof. | 2811 |
| 5300-0346 | Whelen Mini-Freedom LED light bars (PR) model FNMINI 24" with clear lenses and MKEZ7 mounts. Includes red/clear/blue driver and blue/clear/red officer. Location: [#LOC]. | 5070 |
| 5300-0347 | Light bars Federal Signal One (1) center 3 pod Vision SLR model VSLR3S-NFPA1 LED light bar on 4" tall channel riser. One (1) Vision SLR model VSLR85-NFPA1 side light bars containing two (2) 4 pod LED light bars. Lenses to be R/R/W/R R/W/R R/W/R/R. Location: "V" centered on the front cab roof with the center pod mounted on 4" tall channel risers to accommodate an Opticom below (not included). | 6882 |
| 5300-0349 | Light bar Whelen Freedom model FN72QLED 72" LED with clear lenses Opticom and MK8H high mounts. Includes (8) red LED (2) blue LED (2) white (2) LR11 takedown and 795H Opticom. N/A INTL Chassis. Location: Centered on the front cab roof. | 7618 |
| 5300-0350 | Whelen Mini-Freedom LED side facing light bars (PR) model FT8RBRRF 28.25" with clear lenses and MK8H mounts. Location: [#LOC]. | 4875 |
| 5300-0351 | Light bar Whelen Freedom model FN66QLED 66" LED with MK8 high mounts. Includes (13) red LED (7) blue and (2) white takedown LEDs. Location: centered on the front cab roof. | 7662 |
| 5300-0352 | Whelen Mini-Freedom LED light bars (PR) red/blue 24" with clear lenses and MKEZ7 mounts. Location: [#LOC]. | 5070 |
| 5300-0354 | Light bar Federal Signal Split Vision VSLR6. Two (2) 21" 3-pod light bars w/ (3) red pods on each bar with red lenses. Location: [#LOC]. | 3922 |
| 5300-0355 | Light bar Federal Signal Split Vision VSLR6. Two (2) 21" 3-pod light bars w/ (2) red pods and (1) multi-color pod on each bar with red/clear lenses. Location: [#LOC]. | 3922 |
| 5300-0357 | Light bar Federal Signal Vision VSLR60S-NFPA1. Includes (7) LED pods; (5) red (2) multi-color. Location: center cab roof. | 4384 |

| Item No. | Description | |
|---|---|---|
| 5300-0358 | Light bars Federal Signal Vision VSLR. One (1) center 21" 3 pod and two (2) side 26.5" 4 pod LED light bars. Lenses to be R/R/C/R R/C/R R/C/R/R. Location: "V" centered on the front cab roof. If equipped with front vista windows rear LED to be shut off. | 6065 |
| 5300-0359 | Light bar Federal Signal Split Vision VSLR6. Two (2) 21" 3-pod light bars w/ (3) blue pods on each bar with blue lenses. Location: [#LOC]. | 3922 |
| 5300-0360 | Light bar Federal Signal Split Vision VSLR6. Two (2) 21" 3-pod light bars w/ (2) red pods and (1) multi-color pod on each bar with R/C/R lenses. Pods 2 and 5 to have rear rotators programmed amber to rear white side and forward. Location: [#LOC]. | 4291 |
| 5300-0361 | Light bar Federal Signal Split Vision VSLR6. Two (2) 21" 3-pod light bars w/ (2) blue pods and (1) multi-color pod on each bar with B/C/B lenses. Pods 2 and 5 to have rear rotators programmed amber to rear white side and forward. Location: [#LOC]. | 4291 |
| 5300-0362 | Light bars Power Arc model VM2502GLP-1P LED (PR). Colors to be RBR RBR. Includes Golight on each bar. Location: [#LOC]. | 5761 |
| 5300-0363 | Whelen Mini-Freedom LED side facing light bars (PR) model FT8RCCRF 28.25" with R/C/C/R lenses and MK8H mounts. Location: [#LOC]. | 4875 |
| 5300-0364 | Light bar Whelen Freedom model FN72QLED 72" LED with red lenses and MKEZ7 mounts. Includes (10) red LED. N/A INTL Chassis. Location: Centered on the front cab roof. | 4982 |
| 5300-0365 | Light bars Federal Signal Vision VSLR. One (1) center 21" 3 pod and two (2) side 26.5" 4 pod LED light bars. Lenses to be R/C/R/R C/R/C R/R/C/R. Location: "V" centered on the front cab roof. If equipped with front vista windows rear LED to be shut off. | 6065 |
| 5300-0366 | Light bars Federal Signal Vision VSLR. One (1) center 21" 3 pod and two (2) side 26.5" 4 pod LED light bars. Lenses to be R/R/C/R R/R/R R/C/R/R. Location: "V" centered on the front cab roof. If equipped with front vista windows rear LED to be shut off. | 6065 |
| 5300-0367 | Light bar Whelen Freedom model FN66QLED 66" with MKEZ7 mounts. (10) red and (2) white LED light bar without rear facing LEDs. Location: Centered on the front body mounted to the roof with no upper body or mounted on a bracket in front of the body with 13" upper body. | 5302 |
| 5300-0368 | Light bar Federal Signal JetSolaris 60" LED. Red and blue Solaris reflectors reflectors with center traffic clearing light. NFPA compliant does not require 2 addl side facing bars. Location: Centered on the front cab roof. | 3146 |
| 5300-0372 | Light bar Whelen Freedom 72" LED with 3M Opticom and MKEZ7 mounts. Includes (12) red LED and clear lenses. N/A INTL Chassis. Location: Centered on the front cab roof. | 7341 |
| 5300-0373 | Light bar Code 3 model 2758NFPA1CC LED red with clear lenses. Location: Centered on the front cab roof. | 3580 |
| 5300-0374 | Light bar Code 3 LED model 2722NFPA1 (PR) 22" Long. All red with clear lens. Location:[#LOC]. | 4192 |
| 5300-0375 | Light bar Federal Signal Split Vision VSLR8-NFPA4. Two (2) 26.5" 4-pod light bars w/ (2) red and (2) multi-color pods on each bar with clear lenses. Location: [#LOC]. | 5794 |
| 5300-0376 | Light bar Federal Signal Split Vision VSLR6-NFPA1. Two (2) 21" 3-pod light bars w/ (2) red and (1) multi-color pods on each bar with clear lenses. Location: [#LOC]. | 4357 |
| 5300-0377 | Federal Signal 88" EMS Escape model ELX8848 light bar. Location: rear of body up high. | 3806 |
| 5300-0379 | Light bar Whelen Freedom model FN72VLED 72" LED with MKEZ7 mounts. Includes (12) red LED and (2) white LED. N/A INTL Chassis. Location: Centered on the front cab roof. | 5830 |
| 5300-0380 | Light bar Federal Signal JetSolaris 60" LED. Blue Solaris reflectors with clear domes. NFPA compliant. Does not require 2 addl side facing bars. Location: Centered on the front cab roof. | 3053 |
| 5300-0381 | Light bar Federal Signal ADX2205 LED with clear lenses(PR). Location: [#LOC] | 6061 |
| 5300-0383 | Light bar Federal Signal JetStream JLX54HH-00011 with all lenses clear 54" LED. Red Solaris reflectors each side and (2) center TCL lights. Location: Centered on the front cab roof. | 3212 |
| 5300-0384 | Light bar Code 3 model XL5000 74" with R/R/R/B lenses. Location: Centered on the front cab roof. | 2248 |
| 5300-0385 | Light bar Whelen Freedom model FN72QLED 72" LED with MKEZ7 mounts. Includes (8) red LED (2) white LED and (2) dual LR11 LED take down lights. N/A INTL Chassis. Location: Centered on the front vista cab roof. | 5516 |
| 5300-0386 | Light bar Code 3 model 21TR 69". Includes: (4) corner mounted red TRS6 LED modules (2) side facing red TRS3 LED modules and (7) forward facing red LED modules R/R/W/R/W/R/R w/clear lenses. Location: Centered on the front cab roof. | 2671 |
| 5300-0388 | Light bar Whelen Freedom model FN72QLED 72" LED with clear lenses and MKEZ7 mounts. Includes (8) red LED and (4) white LED. N/A INTL Chassis. Location: Centered on the front cab roof. | 5352 |
| 5300-0389 | Light bar Whelen Freedom model FN66QLED 66" with MK8H high mounts. All LED light bar without rear facing LEDs. Location: Centered on the front cab roof. | 4424 |
| 5300-0391 | Light bar Federal Signal Split Vision VSLR8. Two (2) 26.5" 4-pod light bars. Driver w/ (2) red and (2) multi-color pods with clear lenses; officer w/ (3) red and (1) multi-color pods with clear lenses. Location: [#LOC]. | 5794 |
| 5300-0393 | Light bar Whelen Freedom model FN72VLED 72" LED with MKEZ7 mounts. Includes (10) red LED and (2) white LED. N/A INTL Chassis. Location: Centered on the front cab roof. | 5198 |

| Item No. | Description | |
|---|---|---|
| 5300-0396 | Light bar Whelen Freedom 72" LED with MK8 high mounts and clear lenses. Includes (5) red Rota-Beam LED (4) red LED and (4) white LED. N/A INTL Chassis. Location: Centered on the front cab roof. | 6919 |
| 5300-0399 | Light bar Whelen Freedom model FN72QLED 72" LED with GTT Opticom clear lenses and MKEZ7 mounts. Includes (6) red LED (2) blue LED and (2) white LED. N/A INTL Chassis. Location: Centered on the front cab roof. | 7406 |
| 5300-0400 | Light bar Whelen Freedom model FN72QLED 72" LED with GTT Opticom red lenses and MKEZ7 mounts. N/A INTL Chassis. Location: Centered on the front cab roof. | 7249 |
| 5300-0401 | Light bar Whelen Freedom 72" LED with MKEZ7 mounts and clear lenses. Includes (6) Rota-Beam LED (4-red 2-white) (2) green LED (2) red LED (2) dual LR11 alley lights (2) LR11 take down lights and GTT 795H Opticom. N/A INTL Chassis. Location: Centered on the front cab roof. | 7965 |
| 5300-0404 | Light bar Whelen Freedom 72" LED with MK8 high mounts and red / clear lenses. Includes (6) red Rota-Beam LED (1) white Rota-Beam LED and (4) red LED. N/A INTL Chassis. Location: Centered on the front cab roof. | 6442 |
| 5300-0405 | Whelen Mini-Freedom LED light bar package with MKEZ7 mounts. (1) model FT8RCCRF centered on front cab roof (1) FT8RRRRF each side front cab corner at 30 degree angle. Lense colors: Clear. | 6255 |
| 5300-0406 | Light bar Whelen Freedom 72" LED with MK8H high mounts and clear lenses. Includes (6) red Rota-Beam LED (1) white Rota-Beam LED (2) red LED and (2) white LED. N/A INTL Chassis. Location: Centered on the front cab roof. | 6713 |
| 5300-0407 | Light bar Whelen Freedom 60" LED with MK8 high mounts and clear lenses. Includes (6) red Rota-Beam LED (1) white Rota-Beam LED and (2) white LED. N/A INTL Chassis. Location: Centered on the front cab roof. | 6166 |
| 5300-0409 | Light bar Whelen Freedom model FN55QLED 55" LED with MKEZ7 mounts. Location: Centered on the front cab roof. | 3717 |
| 5300-0410 | Light bar Federal Signal JetSolaris 60" LED. Red Solaris reflectors with red domes. NFPA compliant. Does not require 2 addl side facing bars. Location: Centered on the front cab roof. | 3053 |
| 5300-0411 | Light bar Whelen Freedom model FN82QLED 82" LED with clear lenses Opticom and MKEZ7 mounts. Includes (12) red LED and (2) white LED. N/A INTL Chassis. Location: Centered on the front cab roof. | 7344 |
| 5300-0412 | Light bar Federal Signal Legend 70" LED with red/white diodes and clear lenses. Location: Centered on the front cab roof. | 4652 |
| 5300-0413 | Light bar Federal Signal Navigator model NVG73-EONE 73" with (10) red and (2) white Quadraflare LED lights. Location: Centered on the front cab roof. | 3783 |
| 5300-0414 | Light bar Federal Signal Legend. (2) 24" light bars LED. Lenses color: clear. (1) Model number LGD24Z-2655171 and (1) model number LGD24Z-2655292. Location: [#LOC]. | 2387 |
| 5300-0415 | Light bar Federal Signal Navigator model NVG73-NFPA3 73" with (2) red SLR rotators (2) red / white SLR rotators and (4) red Quadraflare LED lights. Location: Centered on the front cab roof. | 4219 |
| 5300-0417 | Light bar Whelen Freedom 72" LED with MKEZ7 mounts and clear lenses. Includes (5) red Rota-Beam LED and (2) white Rota-Beam LED. N/A INTL Chassis. Location: Centered on the front cab roof. | 5562 |
| 5300-0418 | Whelen Ultra Freedom Micro Edge LED (PR) model MCFLED25 clear lens with red LEDs. Location [#LOC]. When used at front cab corners requires additional lighting to meet NFPA. | 2230 |
| 5300-0419 | Whelen Mini-Freedom LED light bars (PR) model FNMINI 24" with clear lenses and low profile MK9 mounts. Location: [#LOC]. | 5070 |
| 5300-0420 | Whelen Mini-Freedom LED side facing light bars (PR) model FT8RRRRF 24" with low profile MK9 mounts. Location: [#LOC]. Lense colors: Red. | 4857 |
| 5300-0421 | Light bar Whelen Freedom 72" LED with MKEZ7 mounts and clear lenses. Includes (8) red Rota-Beam LED and GTT 795H Opticom. N/A INTL Chassis. Location: Centered on the front cab roof. | 7504 |
| 5300-0422 | Light bar Whelen Freedom model FN72VLED 72" LED with 795H Opticom and MKEZ7 mounts. Includes (6) red LED (4) blue LED and (2) white LED. N/A INTL Chassis. Location: Centered on the front cab roof. | 8503 |
| 5300-0423 | Light bar Whelen Freedom model FN66VLED 66" with dual LR11 alley lights dual LR11 takedown lights and MKEZ7 mounts. All LED light bar. Location: Centered on the front cab roof | 4785 |
| 5300-0424 | Light bar Whelen Freedom 72" LED with MKEZ7 mounts and red/clear lenses. Includes (8) red Rota-Beam LED and GTT 795H Opticom. N/A INTL Chassis. Location: Centered on the front cab roof. | 7504 |
| 5300-0427 | Light bar Whelen Freedom model FN55VLED 55" LED with PE215 emitter (4) red driver LED (4) blue officer LED and MKEZ7 mounts and clear lenses. N/A with Vista roofs with front facing windows. Location: Centered on the front cab roof. | 4755 |
| 5300-0428 | Light bar Whelen Freedom model FN66QLED 66" with MKEZ7 mounts. Red/blue/clear LED light bar without rear facing LEDs. Location: Centered on the front cab roof. | 4371 |
| 5300-0429 | Light bar Whelen Freedom model FN72QLED 72" LED red/blue with MKEZ7 mounts and red/clear/blue lenses. N/A INTL Chassis. Location: Centered on the front cab roof | 4483 |

| Item No. | Description | |
|---|---|---|
| 5300-0430 | Light bar Power Arc model LED VM6004-3P 60" long. Lenses color: R/R/R/W/R/R/R Location: center front cab roof. | 3967 |
| 5300-0431 | Light bar Federal Signal Navigator model NVG25-NFPA3 LED (PR). Includes (3) QL64 red and (2) QL73 red in each bar with clear lenses. Location: [#LOC] | 3923 |
| 5300-0432 | Light bar Federal Signal Navigator model NVG25 (PR). Includes (3) QL64 red and (2) QL73 red in each bar with red lenses. Location: [#LOC] | 3923 |
| 5300-0433 | Light bar Federal Signal Navigator model NVG25-0001 (PR). Includes (2) SLR rotators red/white and (1) QL64 red in each bar with clear lenses. Location: [#LOC] | 3854 |
| 5300-0436 | Light bar Federal Signal LPX70DS-NFPA1 70" LED with red and clear lenses. Location: Centered on the front cab roof | 2465 |
| 5300-0437 | Light bar Federal Signal Navigator model NVG60-NFPA4 60" with (10) red Quadraflare LED lights. Location: Centered on the front cab roof. | 3781 |
| 5300-0438 | Light bar Federal Signal Navigator model NVG73-NFPA7 73" with (12) red Quadraflare LED lights. Location: Centered on the front cab roof. | 4370 |
| 5300-0441 | Light bar Whelen Freedom model FN88VLED 88" LED with MKEZ7 mounts and clear lenses. Includes (10) red (6) white LEDs and (2) dual LR11 alley lights. N/A commercial Chassis. Location: Centered on the front cab roof | 7202 |
| 5300-0442 | Light bar Whelen Freedom model FN72VLED 72" LED with 795H Opticom and MKEZ7 mounts. Includes (8) red LED and (4) blue LED. N/A INTL Chassis. Location: Centered on the front cab roof. | 8503 |
| 5300-0443 | Light bar Federal Signal Navigator model NVG25-NFPA-D & -P LED (PR). Includes (2) QL64 red (1) QL64 split red/white and (1) QL73 red in each bar with clear lenses. Location: [#LOC] | 3923 |
| 5300-0444 | Light bar Federal Signal Navigator model NVG73-FLNDRS 73" with (2) red SLR rotators (2) red/white SLR rotators (2) red/white Quadraflare LED and (2) blue Quadraflare LED lights. Location: Centered on the front cab roof. | 4802 |
| 5300-0445 | Federal JLX7250-NFPA LED Light bar 72". Includes (8) red 6-LED reflectors (3) white 6-LED reflectors and (6) red 3-LED reflectors. The lenses shall be clear. No rear lighting. | 4995 |
| 5300-0447 | Light bar Federal Signal LPX 53" LED with red/clear/blue lenses red diodes outer driver clear diodes center and blue diodes outer officer. Location: Centered on the front cab roof | 2145 |
| 5300-0448 | Light bar Whelen Freedom model FN72VLED 72" LED with MK8H high mounts. Includes (11) red LED (2) white LED and (1) green LED. N/A INTL Chassis. Location: Centered on the front cab roof. | 5636 |
| 5300-0449 | Light bar Whelen Freedom model FN72QLED 72" LED with 3M Opticom clear lenses (4) red LEDs' (2) blue LEDs' (2) clear LEDs' and MKEZ7 mounts. N/A INTL Chassis. Location: Centered on the front cab roof. | 7249 |
| 5300-0450 | Light bar Whelen Freedom model FN72VLED 72" LED with Opticom and MKEZ7 mounts. Includes (10) red LED (2) blue LED and (2) white LED. N/A INTL Chassis. Location: Centered on the front cab roof. | 7672 |
| 5300-0452 | Whelen International visor lights. Includes (8) LIN3 red Super Led (2) LIN3 white Super LED and (5) amber LED marker lights. | 2211 |
| 5300-0453 | Light bar Whelen Freedom model FN72VLED 72" LED with MKEZ7 mounts and clear lenses. Includes (10) red LED (2) white LED (2) dual LR11 alley lights and (2) dual LR11 takedown lights. N/A INTL Chassis. Location: Centered on the front cab roof. | 5869 |
| 5300-0454 | Whelen Mini-Freedom LED light bars (PR) model FNMINI 24" with red/clear lenses driver blue/clear lenses officer and MK9 low mounts. Location: [#LOC]. | 5070 |
| 5300-0456 | Light bar Whelen Justice 56" LED with clear lenses and MKEZ7 mounts. N/A on Vista roofs with front facing windows. Includes (4) corner facing LIN6 LED lights (red driver blue officer) (6) forward facing CON3 Linear LED lights; (3) red driver and (3) blue officer. Location: Centered on the front cab roof. | 2675 |
| 5300-0458 | Whelen International visor lights. Includes (8) LIN3 red Super Led (2) LIN3 white Super LED and (5) amber LED marker lights. | 2211 |
| 5300-0459 | Light bar Whelen Freedom model FN72VLED 72" LED with MKEZ7 mounts and PE215 emitter. Includes (8) red LED and (4) blue LED. N/A INTL Chassis. Location: Centered on the front cab roof. | 6228 |
| 5300-0460 | Tomar Scorpion model 970L-2603-0101 LED all red with rear blank NFPA light bars (PR). Location: [#LOC]. | 4205 |
| 5300-0462 | Light bar Federal Signal Split Vision VSLR6S-CHI3. Two (2) 21" 3-pod light bars w/ (1) red pod (1) multi-color pod and (1) blue pod on each bar with clear lenses. Location: [#LOC]. | 3989 |
| 5300-0463 | Wire light bars using Deutsch connectors on exterior for maintenance/replacement. | 196 |
| 5300-0465 | Light bar Whelen Freedom model FN55QLED 55" LED with takedown lights MKEZ7 mounts and red lenses. Location: Centered on the front cab roof. | 4291 |
| 5300-0466 | Light bar Whelen Freedom 60" LED with MKEZ7 mounts and clear lenses. Includes (6) red Rota-Beam LED and (2) white Rota-Beam LED. Location: Centered on the front cab roof. | 6286 |
| 5300-0467 | Whelen Mini-Freedom Rota-Beam LED light bars (PR) 28.25" with clear lenses (1) red (1) white and (1) blue Rota-Beam LED lights with MKEZ7 mounts. Location: [#LOC]. | 6278 |

| Item No. | Description | |
|---|---|---|
| 5300-0468 | Light bar Whelen Freedom 82" LED with MKEZ7 mounts and clear lenses. Includes (8) Rota-Beam LED (6-red 2-white) (2) red LED and GTT 795H Opticom. N/A INTL Chassis. Location: Centered on the front cab roof. | 8653 |
| 5300-0469 | Light bar Federal Signal Navigator model NVG73-NFPA6 73" with (12) red Quadraflare LED lights and clear lenses. Location: Centered on the front cab roof. | 4370 |
| 5300-0470 | Light bar Whelen Freedom model FN55QLED 55" LED with (6) red LED (6) white LED and MKEZ7 mounts. Location: Centered on the front cab roof. | 4392 |
| 5300-0473 | Whelen F4 Mini-Freedom LED light bars (PR) 21.5" with MKEZ7 mounts. Red and white LEDs with clear lense. Location: [#LOC]. | 5070 |
| 5300-0474 | Light bar Federal Signal Split Vision VSLR6. Two (2) 21" 3-pod light bars w/ (2) red pods and (1) multi-color pod on each bar with red/clear lenses. Location: [#LOC]. | 3922 |
| 5300-0475 | Light bar Whelen Freedom model FN72QLED 72" LED GTT Opticom with MKEZ7 mounts. Includes (4) red LED (2) blue LED and (2) white LED. N/A INTL Chassis. Location: Centered on the front cab roof | 6091 |
| 5300-0476 | Light bar Federal Signal Legend. (2) 24" light bars red LED side facing only. Lenses color: clear. Location: [#LOC]. | 2774 |
| 5300-0477 | Light bar Federal Signal Navigatorl NVG25 LED (PR). Includes (2) QL64 red (1) QL64 white and (2) QL73 red in each bar with clear lenses. Location: [#LOC] | 3983 |
| 5300-0478 | Light bar Federal Signal Navigator model NVG87 87" with (8) red and (6) red/white Quadraflare LED lights. Location: Centered on the front cab roof. | 5105 |
| 5300-0479 | Light bar Whelen Justice 56" LED with clear lenses and MKEZ7 mounts. N/A on Vista roofs with front facing windows. Includes (4) corner facing red LIN6 LED lights (6) forward facing CON3 Linear LED lights; (2) red (2) clear and (2) blue. Location: Centered on the front cab roof. | 2675 |
| 5300-0480 | Light bar Whelen Freedom model FN72VLED 72" LED with MKEZ7 mounts. Includes (10) red LED (4) blue and (2) white LED. N/A INTL Chassis. Location: Centered on the front cab roof. | 6133 |
| 5300-0481 | Light bar Code 3 model RMX91-ALRC-100. Upper deck contains (9) R-12 LED modules left and right alley lights. Lower deck contains (2) red R-12 steady burn LED modules (4) R-12 red LED modules (4) takedown lights and 795 emitter. Location: Centered on the front cab roof. | 6636 |
| 5300-0482 | Light bar Federal Signal Legend 70" LED with red/white/blue diodes and clear lenses. Location: Centered on the front cab roof. | 2313 |
| 5300-0484 | Light bar Federal Signal Split Vision VSLR8S. Two (2) 26.5" 4-pod light bars w/ (2) red (1) blue and (1) multi-color pods with clear lenses. Location: [#LOC]. | 4778 |
| 5300-0485 | Whelen Mini-Freedom LED light bars (PR) model FNMINI 24" with clear lenses (1) officer side blue LED and MKEZ7 mounts. Location: [#LOC]. | 5070 |
| 5300-0486 | Light bar Federal Signal JetStream 60'' LED. Red Solaris reflectors and 3M 792 Opticom. Red domes each side with clear center. Location: Centered on the front cab roof | 5355 |
| 5300-0487 | Light bar Whelen Freedom model F4X7 60" LED with clear lenses and MKEZ7 mounts. Includes (10) red LED (4) white LED and side facing TIR6 alley lights. N/A INTL Chassis. Location: Centered on the front cab roof. | 6090 |
| 5300-0489 | Light bar Whelen Freedom IV Model F4N7QLED 72" LED with MKEZ7 mounts. (6) Red and (2) white LEDs with clear lense and no rear facing LEDs. Location: Centered on the front cab roof. | 4483 |
| 5300-0490 | Light bar Whelen Freedom IV 60" LED with MKEZ7 mounts. Red and white LEDs with clear lense and no rear facing LEDs. Location: Centered on the front cab roof. | 4371 |
| 5300-0491 | Whelen F4 Mini-Freedom LED light bars (PR) 21.5" with MKEZ7 mounts. Red and white LEDs clear lenses and red filters. Location: [#LOC]. | 5070 |
| 5300-0493 | Light bar Whelen Freedom IV Model F4N7QLED 72" LED with MKEZ7 mounts. (8) Red and (2) white LEDs with clear lense and no rear facing LEDs. Location: Centered on the front cab roof. | 4982 |
| 5300-0494 | Light bar Whelen Freedom IV Model F4N7QLED 72" LED with MKEZ7 mounts. (6) Red w/ filters and (2) white LEDs with clear lenses and no rear facing LEDs. Location: Centered on the front cab roof. | 4613 |
| 5300-0495 | GTT 795H Opticom centered in forward facing Whelen Freedom IV light bar. | 2159 |
| 5300-0496 | Light bar Whelen Freedom model F4N7VLED 72" LED with MKEZ7 mounts. (6) Red and (2) white LEDs with clear lense. N/A INTL Chassis or Vista roofs with front facing windows. Location: Centered on the front cab roof. | 4483 |
| 5300-0497 | Whelen F4 Mini-Freedom LED light bars (PR) 21.5" with MK9 mounts. Red and white LEDs clear lenses and red filters. Location: [#LOC]. | 5070 |
| 5300-0500 | Whelen F4 Mini-Freedom LED light bars (PR) 21.5" with MKEZ7 mounts. Red and white driver LEDs; blue and white officer LEDs' with clear lenses and red/blue filters. Location: [#LOC]. | 5070 |
| 5300-0502 | Light bar Whelen Freedom IV Model F4N7QLED 72" LED with MKEZ7 mounts. (4) Red (4) Blue and (2) white LEDs with clear lenses and no rear facing LEDs. Location: Centered on the front cab roof. | 4982 |
| 5300-0503 | Whelen MK9S short slide bolt bracket mount for front light bar (PR). | 70 |
| 5300-0504 | Whelen MKEZ7 1.5" standard mount for front light bar (PR). | 55 |
| 5300-0505 | Whelen MK8H 5" high mount for front light bar (PR). | 138 |
| 5300-0507 | Light bar Whelen Freedom IV Model F4X7 72" with 14 LED modules. Location: Centered on the front cab roof. | 6163 |

| Item No. | Description | |
|---|---|---|
| 5300-0509 | Light bar Whelen Freedom IV Model F4X7 72" with 12 LED modules. Location: Centered on the front cab roof. | 5580 |
| 5300-0510 | Light bar Whelen Freedom IV Model F4X7 72" with 10 LED modules. Location: Centered on the front cab roof. | 4927 |
| 5300-0511 | Light bar Whelen Freedom IV Model F4X7 72" with 8 LED modules. Location: Centered on the front cab roof. | 4428 |
| 5300-0512 | Light bar layout per customer specific requirements. | 281 |
| 5300-0513 | Colored filters for Whelen Freedom IV light bar. | 87 |
| 5300-0514 | Whelen MK9S short slide bolt bracket mount for mini front light bars (4). | 140 |
| 5300-0515 | Whelen MKEZ7 1.5" standard mount for mini front light bars (4). | 110 |
| 5300-0516 | Whelen MK8H 5" high mount for mini front light bars (4). | 276 |
| 5300-0517 | Whelen MK9S short slide bolt bracket mount for mini side facing light bars (4). | 140 |
| 5300-0518 | Whelen MKEZ7 1.5" standard mount for mini side facing light bars (4). | 110 |
| 5300-0519 | Whelen MK8H 5" high mount for mini side facing light bars (4). | 276 |
| 5300-0522 | Light bar Whelen Freedom IV Model F4X0 60" with 8 LED modules. Location: Centered on the front cab roof. | 4428 |
| 5300-0524 | Whelen F4 Mini-Freedom LED light bars (PR) 21.5" with 5 LEDs in each bar. Location: [#LOC]. | 4960 |
| 5300-0525 | Whelen TIR6 takedown lights for Freedom IV lightbar (PR). | 565 |
| 5300-0526 | Whelen F4 Mini-Freedom LED light bars (3) 21.5" with 5 LEDs' in each outer bar 4 LED's in center bar Location: Center front of cab roof and front cab corners at 45 degree angle. | 7091 |
| 5300-0527 | Light bar Federal Signal Navigator NVG25 LED (PR) side facing. Includes (3) QL64 red/white in each bar with clear lenses. Location: [#LOC] | 3257 |
| 5300-0528 | Light bar Federal Signal Navigator model NVG73 73" with (10) split red/white Quadraflare LED lights and (2) red Quadraflare LED lights. Location: Centered on the front cab roof. | 4447 |
| 5300-0529 | Light bar Whelen Freedom IV Model F4X0 55" with 8 LED modules. Location: Centered on the front cab roof. | 3729 |
| 5300-0530 | Light bar Federal Signal Navigator NVG25 LED side facing (PR). Includes (1) QL73 red (1) QL64 red/white and (1) red LED rotator in each bar with clear lenses. Location: [#LOC]. | 3244 |
| 5300-0531 | Light bar Federal Signal Navigator NVG25 LED (PR). Includes (2) QL64 red (2) QL64 red/white and (1) red/white LED rotator in each bar with clear lenses. Location: [#LOC]. | 4052 |
| 5300-0533 | Light bar package Whelen 4500 LED (3) bar package. Includes: (1) 40'' LED front bar w/ Opticom and (2) diagonal 24'' LED bars. | 10097 |
| 5300-0534 | Light bar Federal Signal Navigator model NVG87 87" with (10) red and (4) red/white Quadraflare LED lights. Center red/white LEDs' to flash in an "X" pattern. Location: Centered on the front cab roof. | 5105 |
| 5300-0535 | Light bar Federal Signal Navigator NVG25 LED (PR). Includes (2) QL64 red (1) QL64 split red/white and (2) QL73 red in each bar with clear lenses. Location: [#LOC] | 3983 |
| 5300-0536 | Light bar Whelen Freedom IV Model F4R7 72" with 9 Rotabeam and 4 LED modules. Location: Centered on the front cab roof. | 7904 |
| 5300-0537 | Light bar Whelen Freedom IV Model F4X1 81" with 14 LED modules. Location: Centered on the front cab roof. | 6172 |
| 5300-0538 | Steady burn additional red LED module forward facing in officer side of Whelen light bar to meet California DOT. | 276 |
| 5300-0539 | Steady burn additional green LED module forward facing in officer side of Whelen light bar. | 305 |
| 5300-0540 | Light bar Whelen Freedom IV Model F4X0 60" with 14 LED modules. Location: Centered on the front cab roof. | 6172 |
| 5300-0541 | Whelen TIR6 alley lights for Freedom IV lightbar (PR). | 565 |
| 5300-0542 | Light bar Federal Signal Navigator model NVG18 LED (PR). Includes (2) QL64 split red/white and (1) QL73 red in each bar with clear lenses. Location: [#LOC] | 3122 |
| 5300-0543 | Light bar Federal Signal Navigator model NVG25-0001 (PR). Includes (2) SLR red/white rotators and (1) red QL64 in each bar with clear lenses. Location: [#LOC] | 4036 |
| 5300-0548 | 2" standard mount for front Federal Navigator light bar (PR). | 80 |
| 5300-0549 | 2" standard mount for mini front Federal Navigator light bars (4). | 161 |
| 5300-0550 | 2" standard mount for mini side facing Federal Navigator light bars (4). | 161 |
| 5300-0555 | Light bar Whelen Mini-Freedom IV side facing model F4RB 23" with 3 Rotabeams (PR). Location: [#LOC]. | 6514 |
| 5300-0556 | Light bar Whelen Freedom IV Model F4X7 72" with 18 LED modules. Location: Centered on the front cab roof. Requires no forward vista windows or flat roof only. | 7172 |
| 5300-0557 | Light bar Whelen Freedom IV Model F4X1 81" with 18 LED modules. Location: Centered on the front cab roof. | 7360 |
| 5300-0558 | GTT 795H Opticom in forward facing Federal Signal Navigator light bar. | 1659 |
| 5300-0559 | Light bar Whelen Freedom IV Model F4 56" with 6 Rotabeam modules. Location: Centered on the front cab roof. | 5445 |

| Item No. | Description | |
|---|---|---|
| 5300-0560 | Light bar Whelen Freedom IV Model F4R0 60" with 6 Rotabeam and 2 LED modules. Location: Centered on the front cab roof. | 5972 |
| 5300-0562 | Light bar Federal Signal JetSolaris 60" LED. Red Solaris reflectors with clear domes. Includes LED takedowns and LED alley lights. NFPA compliant. Does not require 2 addl side facing bars. Location: Centered on the front cab roof. | 3053 |
| 5300-0563 | Light bar Whelen Mini-Freedom IV model F4RB 23" with 2 Rotabeams and 2 LED modules (PR). Location: [#LOC]. | 6649 |
| 5300-0565 | Light bar Whelen Freedom IV Model F4X7 72" with 16 LED modules. Location: Centered on the front cab roof. | 6579 |
| 5300-0566 | Light bar Whelen Freedom IV Model F4R0 60" with 6 Rotabeam and 8 LED modules. Location: Centered on the front cab roof. Includes rear facing Rotabeam and LED modules. | 7942 |
| 5300-0567 | Light bar Whelen Freedom IV Model F4R7 72" with 6 Rotabeam and 4 LED modules. Location: Centered on the front cab roof. | 6447 |
| 5300-0568 | Light bar Code 3 LED model 21TR22 (PR) 22" Long. All red with clear lens. Location: [#LOC] | 2422 |
| 5300-0569 | Light bar Code 3 model 21TRPL52 LED red/clear with clear lenses. Location: Centered on the front cab roof. | 1919 |
| 5300-0570 | Light bar Federal Signal Navigator model NVG25 (EA). Requires additional forward facing for NFPA compliancy. Includes (1) QL64 split red/white (2) red QL64 and (2) QL73 red with clear lenses. Location: Centered on the front cab roof. | 1909 |
| 5310-0005 | Whelen Traffic Advisor Model TA837A - 43.25" long. | 1258 |
| 5310-0006 | Whelen Traffic Advisor Model TA870A - 62" long. | 1972 |
| 5310-0010 | Light bar Federal Signal Signal Master SML430 19.5" long (PR). Mounted each side rear of body. | 1169 |
| 5310-0011 | Light bar CODE 3 model AS10S Arrowstik 47" long. Mounted center rear body. | 1454 |
| 5310-0012 | Diamond plate shield over rear directional light. | 361 |
| 5310-0014 | Light bar CODE 3 model AS839 Arrowstik 39" long. Lenses to be amber with red on the ends. Mounted center rear body. | 1188 |
| 5310-0015 | Light bar CODE 3 model NASL839 LEDX Narrowstik 40.5" long. Lights heads are amber with red on the ends. Mounted center rear body. | 2117 |
| 5310-0017 | Whelen Traffic Advisor model TAL65 LED - 36" long. | 1559 |
| 5310-0018 | Whelen Traffic Advisor Model TAM65 LED - 36" long. | 2016 |
| 5310-0023 | Light bar CODE 3 model NASL630 LEDX Narrowstik 30.5 inches long. | 1898 |
| 5310-0025 | Directional light circuit wiring through upper level warning. | 89 |
| 5310-0027 | Whelen Traffic Advisor Model TAM85 LED - 47" long. | 2821 |
| 5310-0028 | Whelen Traffic Advisor Model TAM83 LED - 31" long. | 2066 |
| 5310-0029 | Smooth plate shield painted job color over rear directional light. | 625 |
| 5310-0030 | Whelen Traffic Advisor Model TA870L LED- 62" long. | 4044 |
| 5310-0031 | Whelen Traffic Advisor model TA-4437M LED split (2) 22.75" long. Locate one each side on rear panel of body. | 2362 |
| 5310-0035 | Whelen Traffic Advisor Model TAL85 LED - 47" long. | 1963 |
| 5310-0042 | Whelen Traffic Advisor Model TAZ86 LED - 31" long. | 2595 |
| 5310-0043 | Whelen Traffic Advisor Model TANF65 LED - 34" long. | 1984 |
| 5310-0044 | Light bar Federal Signal Signal Master Viper EXT LED 42" with 8 lights. | 2064 |
| 5310-0045 | Light bar Federal Signal Signal Master Viper EXT LED 31" with 6 lights. | 1823 |
| 5310-0046 | Whelen Traffic Advisor Model TANF85 LED - 45" long. | 2451 |
| 5310-0053 | Whelen Traffic Advisor model TA-4437M LED split (2) 22.75" long. Locate one each side on rear upper body extrusion above B2 and B3. | 2362 |
| 5310-0054 | Light bar Federal Signal Signal Master Plus SMLED-PLS-6. | 1538 |
| 5310-0055 | Light bar Federal Signal Master Viper EXT LED 31" with 6 lights with clear lenses. | 1823 |
| 5310-0056 | Whelen Traffic Advisor model TAL65 LED - 36" long. Locate surface mounted on driver and officer side of body up high approx. centered. | 1559 |
| 5310-0058 | Whelen Traffic Advisor Model TADP8 LED - 30" long. Includes TADCTL1 controller. | 2463 |
| 5310-0059 | Whelen Traffic Advisor Model TAD8 LED - 30" long. Includes TADCTL1 controller. | 2085 |
| 5310-0060 | Whelen Traffic Advisor Model TAZ66 LED - 23.25" long. | 2084 |
| 5310-0061 | Brushed stainless steel shield over rear directional light. | 417 |
| 5310-0062 | Light bar Tomar model LSTICK13W6 24.5" long with amber light heads. | 1467 |
| 5310-0063 | Federal Signal Viper EXT Model VPX800-2 LED w/ bezel (PR). Surfaced mounted with clear lens wired through ignition. Location: above rear ladder tunnel door. | 630 |
| 5310-0064 | Whelen Traffic Advisor Model TAM63 LED - 24" long. | 1909 |
| 5310-0065 | Light bar Tomar model LSTICK13W6 24.5" long with amber light heads. | 1467 |
| 5310-0066 | Whelen Traffic Advisor Model TAM8348 LED - 48" long. | 2226 |
| 5310-0067 | Skid plate shield for directional light bar. | 467 |
| 5310-0068 | Whelen Traffic Advisor Model TAD8RB LED - 30" long. Includes red driver and blue officer warning with TADCTL1 controller. | 2085 |
| 5310-0070 | Whelen Traffic Advisor model TAL65 LED with clear lenses - 36" long. | 1559 |

| Item No. | Description | |
|---|---|---|
| 5310-0071 | Whelen Traffic Advisor model TADF6 LED - 37" long. Warning to be R/R/R/B/B/B. | 2926 |
| 5310-0072 | Light bar PowerArc model P14PSK LED with 5 lights. Center to be red/yellow. Red to override with application of brakes. Driver and officer upper two amber to override with individual turn signals. | 3699 |
| 5310-0073 | Light bar Federal Signal Latitude Signal Master 24". | 1057 |
| 5350-0000 | Camera backup Intec with monochrome monitor. | 5210 |
| 5350-0001 | Camera back-up Safety Vision LCD model SV-CLCD70BA-625B with audio. For use with up to 2 cameras. | 2351 |
| 5350-0022 | Intec color camera Model CVC460XL. | 2983 |
| 5350-0023 | Intec black and white camera Model CVC230XL. | 2357 |
| 5350-0031 | Digital Video Recorder Single Channel | 1247 |
| 5350-0054 | Safety Vision officer's side camera. Requires Safety Vision back-up camera option. SV-620 Kit w/ SV-523. Camera to be located on officer's side mirror. | 1029 |
| 5350-0060 | Diamond plate camera shield. | 242 |
| 5350-0061 | Safety Vision driver's side camera. Requires Safety Vision back-up camera option. SV-620 Kit w/ SV-523. Camera to be located on driver's side mirror. | 1029 |
| 5350-0078 | Smooth plate camera shield painted job color. | 373 |
| 5350-0080 | Camera back-up Safety Vision LCD model SV-CLCD70A-625B with split screen capable monitor and audio. For use with up to 4 cameras. | 2756 |
| 5350-0085 | Safety Vision officer's side camera SV-622RS w/ SV-512 cable. Requires Safety Vision back-up camera option. Camera to be located up high on officer side of the cab centrally located (above canopy window if applicable) interlocked with right turn signal. Camera only - does not include monitor. | 1065 |
| 5350-0086 | Safety Vision driver's side camera SV-622LS w/ SV-512 cable. Requires Safety Vision back-up camera option. Camera to be located up high on driver side of the cab centrally located (above canopy window if applicable) interlocked with left turn signal. Camera only - does not include monitor. | 1065 |
| 5350-0110 | Camera backup Zone Defense LCD model SYS-323-1-4Q with split screen capable monitor. | 2269 |
| 5350-0111 | Camera backup Zone Defense LCD model SYS-323-1-4 with monitor and console. | 1529 |
| 5350-0116 | Federal Signal back-up/DVR camera system. Includes front view rear view camera side view cameras split screen monitor and DVR. | 4517 |
| 5350-0118 | Camera backup Federal Signal LCD model CAMSET70-NTSC-4 with monitor. | 1376 |
| 5350-0140 | Safety Vision officer's side camera SV-622RS w/ SV-512 cable. Requires Safety Vision back-up camera option. Camera to be located on officer's side gravel shield offset to the rear. | 1029 |
| 5350-0142 | Safety Vision officer's side camera. Requires Safety Vision back-up camera option. SV-620 Kit w/ SV-523. Camera to be located on officer's side of cab above tank level lights. | 1029 |
| 5350-0158 | Camera back-up Safety Vision LCD model SV-CLCD70B-625B with audio. Located in cab dash on bracket (see photos). | 2351 |
| 5350-0169 | Camera back-up Safety Vision LCD model SV-CLCD-64-810 with lens shutter that opens when the unit is put in reverse. | 2432 |
| 5350-0180 | Safety Vision officer's side camera SV-622RS w/ SV-512 cable. Requires Safety Vision back-up camera option. Camera to be located up high on officer side of the cab centrally located (above canopy window if applicable) interlocked with left turn signal. Camera only - does not include monitor. | 1065 |
| 5350-0181 | Camera back-up Safety Vision LCD model SV-CLCD70BA-620A with audio. For use with up to 2 cameras. Includes monitor for console mounting. | 2524 |
| 5350-0192 | Safety Vision back-up camera wired through multiplex display. Video displays automatically when transmission is in reverse. Camera only - does not include monitor. | 1029 |
| 5350-0219 | Safety Vision officer's side camera SV-622RS w/ SV-512 cable. Requires Safety Vision back-up camera option. Camera to be located on the officer side cab up high behind front door below the scene light interlocked with right turn signal. Camera only - does not include monitor. | 1065 |
| 5350-0257 | Federal Signal (Sony) driver's side camera. Camera to be located up high on driver side of the cab centrally located (above canopy window if applicable) interlocked with left turn signal. Camera only - does not include monitor. | 774 |
| 5350-0258 | Federal Signal (Sony) officer's side camera. Camera to be located up high on officer side of the cab centrally located (above canopy window if applicable) interlocked with left turn signal. Camera only - does not include monitor. | 774 |
| 5350-0270 | Federal Signal (Sony) driver's side camera. Camera to be located on front cab corner (approx 31" bottom of camera to bottom of cab) interlocked with left turn signal. Camera only - does not include monitor. | 774 |
| 5350-0271 | Federal Signal (Sony) officer's side camera. Camera to be located on front cab corner (approx 31" bottom of camera to bottom of cab) interlocked with right turn signal. Camera only - does not include monitor. | 774 |

| Item No. | Description | |
|---|---|---|
| 5350-0287 | Brushed stainless steel camera shield. | 279 |
| 5350-0299 | Safety Vision CF DVR with SV-620A camera on front of cab above grille. No monitor. Camera to record when truck is in operation both drriving and sitting idle. | 3148 |
| 5350-0308 | Safety Vision forward camera. Requires Safety Vision back-up camera option. SV-620 Kit w/ SV-523. Camera to be located on front of cab centered below windshield. | 1029 |
| 5350-0310 | Will-Burt 5-20 Vertical Mast with 120VAC / Sidewinder High Def camera package. E-One supplied & VanMor installed: Includes: 2.5 inch top tube platform non-rotating base plate external mounting hardware 1 inch ID Nycoil & mtg brkt Nycoil pull. Sidewinder camera package includes:Sidewinder High Def camera 20X optical zoom universal PTZ controller with color display wall block cable power supply Ethernet to Serial Converter H.264 cable with MS connector. Also included is a Mobile DVR 4 channel with WiFi GPS & 500 GB HDD. | 41319 |
| 5350-0311 | Rosco dual vision camera system model DV231. Interior mounted at the front windshield. | 1942 |
| 5350-0324 | Safety Vision officer's side camera SV-622RS w/ SV-512 cable. Requires Safety Vision back-up camera option. Camera to be located on the officer side cab above fenderette interlocked with right turn signal. Camera only - does not include monitor. | 1065 |
| 5350-0329 | Trico installed customer supplied communication system. Antenna installed at manufacturers discretion. Programming to be done by customer. | 2507 |
| 5380-0004 | Compartment light incandescent additional (EA). Locate opposite of standard (if applicable) in compartment [#LOC] | 86 |
| 5380-0005 | Compartment light Truck-Lite LED additional (EA). Locate opposite of standard in compartment [#LOC]. | 223 |
| 5380-0006 | Compartment light incandescent additional (EA). Door(s) mounted. Compartment [#LOC]. | 134 |
| 5380-0007 | Compartment light Truck-Lite LED additional (EA). Door(s) mounted. Compartment [#LOC]. | 304 |
| 5380-0008 | Compartment light package incandescent for small bodies. | 573 |
| 5380-0010 | Compartment light package incandescent for large bodies. | 1329 |
| 5380-0013 | Compartment light package Truck-Lite LED for large bodies. | 5304 |
| 5380-0016 | Compartment light package ROM for large bodies. Includes one light per compartment (two if transverse). (OBSOLETE FROM VENDOR) | 5604 |
| 5380-0019 | Compartment light package POK LED for large bodies. Includes one light per compartment (two if transverse). | 6831 |
| 5380-0020 | Compartment light ROM 14-48" long additional (EA). Locate [#LOC]. (OBSOLETE FROM VENDOR) | 352 |
| 5380-0021 | Compartment light ROM 49-84" long additional (EA). Locate [#LOC]. (OBSOLETE FROM VENDOR) | 522 |
| 5380-0022 | Compartment light POK LED additional (EA). Locate [#LOC]. | 379 |
| 5380-0023 | Compartment light POK LED additional (EA). Locate [#LOC]. | 650 |
| 5380-0027 | Ground light package for cab and body - small. | 532 |
| 5380-0029 | Ground light package for cab and body - large. | 798 |
| 5380-0030 | Ground light package LED - small. | 1737 |
| 5380-0032 | Ground light package LED - large. | 2600 |
| 5380-0033 | Step light package body - small. | 497 |
| 5380-0035 | Step light package body - large. | 744 |
| 5380-0036 | Step light package body LED - small. | 1700 |
| 5380-0038 | Step light package body LED - large. | 2547 |
| 5380-0042 | Light recessed step Truck-Lite incandescent (additional). Locate [#LOC]. | 137 |
| 5380-0045 | Light recessed step Truck-Lite LED (additional). Locate [#LOC]. | 209 |
| 5380-0060 | Additional LED ground light (EA). Location: Below [#LOC]. | 235 |
| 5380-0062 | Compartment light Federal Signal LED additional (EA). Locate opposite of standard in compartment [#LOC]. | 157 |
| 5380-0066 | Compartment light package Federal Signal LED for large bodies. | 4311 |
| 5380-0067 | Ground light package Federal Signal LED - small. | 1737 |
| 5380-0068 | Ground light package Federal Signal LED - large. | 2601 |
| 5380-0069 | Step light package body Federal Signal LED - small. | 1305 |
| 5380-0070 | Step light package body Federal Signal LED - large. | 1961 |
| 5380-0071 | Light Federal Signal recessed step LED (additional). Locate [#LOC]. | 167 |
| 5380-0072 | Additional Federal Signal LED ground light (EA). Location: Below [#LOC] | 220 |
| 5380-0074 | Compartment light package Whelen PSC0CDCR LED for large bodies. Light to be stacked vertically on forward side of compartment unless implacable. | 6540 |
| 5380-0075 | Compartment light incandescent additional (EA). Locate on ceiling of [#LOC]. | 86 |
| 5380-0082 | Ground light package Whelen LED - large. | 3515 |
| 5380-0083 | Step light package Whelen LED - large. | 3515 |
| 5380-0084 | Ground light package for cab and body - large body. There will be 2 lights under each Compartment opening. | 1590 |
| 5380-0086 | Ground light package Amdor Luma Bar / Trucklite LED - large. Lights below cab doors to be Luma Bar lights below bumper and body to be Trucklite. | 2673 |
| 5380-0087 | Compartment light package Weldon LED for medium bodies. | 2281 |

| Item No. | Description | |
|---|---|---|
| 5380-0088 | Ground light package Weldon LED - small. | 1567 |
| 5380-0089 | Step light package body Weldon LED - small. | 1141 |
| 5380-0090 | Compartment light LED (EA). Location: [#LOC]. | 223 |
| 5380-0091 | Whelen PSC0CDCR LED strip light. Locate opposite standard in [#LOC]. | 171 |
| 5380-0096 | Two (2) Whelen PSC0CDCR LED strip light. Locate two (2) opposite side of standard in [#LOC] one (1) 20" down from top of opening and one (1) 10" up from bottom. | 341 |
| 5380-0097 | Whelen PSC0CDCR LED strip light. Locate one (1) light 15" down from top of opening on opposite side of standard in [#LOC]. | 171 |
| 5380-0100 | There will be a pair of lights recessed in the ceiling using a poly mounting bezel. Each Lamp will be 7 inch round and be switched near the door opening. Switch plate for lights can accommodate a qty of 6 rocker switches. Lights will alternate side to side and front to rear per color and be evenly spaced from front to rear. Light color will be [#COL] and switched accordingly. | 525 |
| 5380-0112 | There will be an E-One supplied VanMor installed pair of lights recessed in the ceiling using a poly mounting bezel. Each Lamp will be 7 inch round and be switched near the door opening. Switch plate for lights can accomodate a qty of 6 rocker switches. Lights will alternate side to side and front to rear per color and be evenly spaced from front to rear. Light color will be [#COL] and switched accordingly. | 119 |
| 5380-0116 | Ground light package Amdor Luma-Bar H2O LED - large. | 2015 |
| 5380-0136 | Compartment light package Amdor Luma-Bar LED for large bodies. Includes one light per compartment (two if transverse). | 4433 |
| 5380-0138 | Compartment light ROM V3 LED 24-36" long additional (EA). Locate [#LOC]. | 301 |
| 5380-0141 | Compartment light package ROM V3 LED for medium bodies. Includes one light per compartment (two if transverse). | 3342 |
| 5380-0142 | Compartment light package ROM V3 LED for medium bodies. Includes two lights per compartment (four if transverse). | 6684 |
| 5380-0145 | Compartment light package Amdor Luma-Bar LED for large bodies. Includes two lights per compartment (four if transverse). | 8864 |
| 5380-0148 | Compartment light package ROM V3 LED for large bodies. Includes one light per compartment (two if transverse). | 5316 |
| 5380-0149 | Compartment light package ROM V3 LED for large bodies. Includes two lights per compartment (four if transverse). | 10627 |
| 5380-0166 | Compartment light Trucklite LED additional (EA). Locate in [#LOC]. | 223 |
| 5380-0168 | Compartment light package Federal Signal/Amdor LED for large bodies. Includes single Amdor LED light in compartments L1/R1 L2/R2 and Federal LED in remaining compartments. | 3584 |
| 5380-0179 | Dome Lts Red/White 4" LED (each) (6). Each light shall consist of a three-position assembly mounted rocker switch LED (light emitting diode) 4" grommet mount white dome light LED (light emitting diode) 4" grommet mount red dome light and a plastic housing. Lights to be located in pairs down the center of the truck in the interior alternating in color. White light wired through rocker switch at entry door. Red light through light assembly mounted rocker switch. | 2518 |
| 5380-0180 | There shall be 2 clear LED lights and 2 red LED lights located under the interior upper cabinets above the desk. Lights will alternate red and clear. each color shall have it's own switch. Locate the switches in the Vista diplay. | 1255 |
| 5380-0202 | Step light package body EON LED - large. | 1239 |
| 5380-0203 | Step light package body EON LED - small. | 841 |
| 5380-0205 | Cab step lighting package. Includes (2) EON LED lights per side. | 271 |
| 5380-0206 | Cab step lighting package. Includes (4) EON LED lights per side. | 538 |
| 5380-0214 | Compartment light Truck-Lite LED additional (EA). Locate on ceiling of [#LOC]. | 223 |
| 5380-0218 | Step light package Whelen LED - small. | 1945 |
| 5380-0219 | Compartment light package Whelen Fluorent Plus for large bodies. Includes two lights per compartment (four if transverse). | 11375 |
| 5380-0222 | Interior light ceiling mounted Grote model 61-511 12 volt fluorescent recessed mount white dome light | 519 |
| 5380-0224 | Whelen PSC0CDCR LED strip light. Mount light [#LOC]. | 171 |
| 5380-0225 | There will be Six (6) lights centered in ceiling in line evenly spaced using a plastic mounting bezel. | 1706 |
| 5380-0226 | Compartment light Amdor white lumbar. Location: [#LOC]. | 241 |
| 5380-0227 | A switch plate for interior lighting controls shall be located [#LOC]. It shall accommodate a quantity of six (6) rocker switches. It will be illuminated and labeled per each switch's function. | 554 |
| 5380-0229 | There will be a pair of Weldon 8049-0000 series 8 inch diameter 12 volt recessed LED lights with specific colored lenses RECESS mounted into the ceiling of the walk-in body. Each lamp will be 7 inch round and be switched near the door opening. The pair includes a clear and a red fixture. | 575 |

| Item No. | Description | |
|---|---|---|
| 5380-0231 | There will be a pair of Truck-Lite 4 inch diameter 12 volt LED lights with clear lenses which shall be RECESS mounted into the canopy area above the walk-in body doors. The lights shall be activated when the rear doors are opened. | 475 |
| 5380-0235 | Ground light package Amdor Luma Bar H2O LED - small. | 1068 |
| 5380-0236 | Additional LumaBar H2O LED ground light (EA). Location: Below [#LOC]. | 186 |
| 5380-0239 | Whelen PELCC ground light package LED - large. | 3148 |
| 5380-0245 | Compartment light ROM V4 LED 24-36" long additional (EA). Locate [#LOC]. | 301 |
| 5380-0246 | Compartment light ROM V4 LED 42-72" long additional (EA). Locate [#LOC]. | 504 |
| 5380-0251 | Compartment light package ROM V4 LED for medium bodies. Includes one light per compartment (two if transverse). | 3342 |
| 5380-0252 | Compartment light package ROM V4 LED for medium bodies. Includes two lights per compartment (four if transverse). | 6684 |
| 5380-0253 | Compartment light package ROM V4 LED for large bodies. Includes one light per compartment (two if transverse). | 5316 |
| 5380-0254 | Compartment light package ROM V4 LED for large bodies. Includes two lights per compartment (four if transverse). | 10627 |
| 5380-0257 | Compartment light package Amdor Luma-Bar blue LED for large bodies. Includes two lights per compartment (four if transverse). | 8864 |
| 5380-0259 | Compartment light ROM V4 LED additional (EA) ceiling mounted as close to door opening as practical. Location: [#LOC]. | 370 |
| 5380-0266 | Whelen PELCC lights LED (PR). Wired through work light switch. Location: [#LOC]. | 691 |
| 5380-0274 | Rescue walkway lighting TecNiq EON LED. Includes (3) lights with S/S housings low on side wall(s) of upper body compartments to illuminate walkway. Location: [#LOC]. | 267 |
| 5380-0278 | Compartment light package TecNiq T440 4" LED for large bodies. | 1341 |
| 5380-0284 | EON step light located (2) each side under horizontal hosebed extrusion to illuminate compartment tops. | 516 |
| 5380-0285 | Step light package body TecNiq T440 4" LED - small. | 581 |
| 5380-0286 | Step light package body TecNiq T440 4" LED - large. | 873 |
| 5380-0292 | Ground light package Whelen 3" LED - large. | 2098 |
| 5380-0293 | Step light package Whelen 3" LED - large. | 1561 |
| 5380-0294 | Flush mount switch plate for interior lighting controls. The Light switch control panel shall be flush mounted in the specified location. Requires additional sales code for light switch panel. | 246 |
| 5380-0295 | There will be a set of Weldon 8049-0000 series 8 inch diameter 12 volt recessed LED lights with specific colored lenses RECESS mounted into the ceiling of the walk-in body. Each lamp will be 7 inch round and be switched near the door opening. The pattern consists of (4) four clear fixtures equally spaced on ceiling and (2) red fixtures (1) one over each work station surface. | 1724 |
| 5380-0299 | Ground light package red Amdor Luma-Bar H2O LED - large. | 2015 |
| 5380-0302 | Additional TecNiq T440 4" LED ground light (EA). Location: Below [#LOC]. | 145 |
| 5380-0308 | Compartment light package Hansen LED for medium bodies. Includes one light per compartment (two if transverse). | 1380 |
| 5380-0309 | Compartment light package Hansen LED for large bodies. Includes one light per compartment (two if transverse). | 3013 |
| 5380-0311 | Compartment light package Hansen LED for medium bodies. Includes two lights per compartment (four if transverse). | 2761 |
| 5380-0312 | Compartment light package Hansen LED for large bodies. Includes two lights per compartment (four if transverse). | 5968 |
| 5380-0313 | Compartment light Hansen 18-37" long additional (EA). Locate [#LOC]. | 200 |
| 5380-0314 | Compartment light Hansen LED 49-65" long additional (EA). Locate [#LOC]. | 211 |
| 5380-0317 | Step light additional. Amdor 20" Luma Bar H2O LED. Location: [#LOC]. | 236 |
| 5380-0318 | Whelen model 3SC0CDCR with chrome flange door pan mounted on outboard corners. Location: L2 | 396 |
| 5380-0326 | Compartment light FireTech LED additional (EA) ceiling mounted as close to door opening as practical. Location: [#LOC]. | 442 |
| 5380-0328 | Ground light package FireTech LED - large. | 3644 |
| 5390-0000 | Deck light - Unity 12 volt (PR). Location: [#LOC]. | 421 |
| 5390-0006 | Deck lights Collins FX-12R (PR). Location: [#LOC]. | 1198 |
| 5390-0007 | Deck/scene light circuit wiring through chassis reverse. Requires rear deck or scene light. | 89 |
| 5390-0008 | Federal Signal GH scene lights (PR). Switch in cab (driver and officer side facing lights switched separately). Locate [#LOC]. | 495 |
| 5390-0018 | Whelen 600 series 26 degree scenelights (PR) with weatherproof connectors. Switch in cab (driver and officer side facing lights switched separately). Locate [#LOC]. | 391 |
| 5390-0019 | Whelen 700 series 8-32 degree scenelights (PR) with weatherproof connectors. Switch in cab (driver and officer side facing lights switched separately). Locate [#LOC]. | 385 |

| Item No. | Description | |
|---|---|---|
| 5390-0020 | Whelen 900 series Gradient Opti-Scenelight (PR) with weatherproof connectors. Switched in cab (driver and officer side facing lights switched separately). Locate [#LOC]. | 391 |
| 5390-0023 | Tomar 46H13-C 13 degree scene lights (PR) with weatherproof connectors. Switch in cab (driver and officer side lights switched separately). Locate [#LOC]. | 435 |
| 5390-0025 | Cab scene lights are to be switched with cab doors in addition to standard. | 89 |
| 5390-0026 | Federal Signal GH Scene cornering lights (PR) wired to turn signals reverse and work lights. Location: [#LOC] | 948 |
| 5390-0030 | Deck Lts-Collins FX-6 (PR) Location: [#LOC] | 1198 |
| 5390-0036 | Hose bed light circuit wiring through chassis reverse. Requires hose bed light. | 89 |
| 5390-0039 | Federal Signal GH Scene lights (PR). Switch in cab (driver and officer side facing lights switched together). Locate [#LOC] | 495 |
| 5390-0040 | Weldon 4 x 6 HID scene lights (PR) with weatherproof connectors. Switch in cab (driver and officer side lights switched separately). Locate [#LOC]. | 1390 |
| 5390-0041 | Whelen 900 series Gradient Opti-Scene lights (PR) with diamond plate mounting box. Switch in cab (driver and officer side facing lights switched separately). Locate [#LOC]. | 589 |
| 5390-0045 | Kwik Strike 4000 Scene lights. KR-4035X-H-(R or L). Located [#LOC]. All lights to be mounted as high as possible. Switch in cab (driver and officer side facing lights switched separately). | 670 |
| 5390-0048 | Whelen 600 series gradient Super LED scene lights (PR) with weatherproof connectors. Switch in cab (driver and officer side lights switched separately). Locate [#LOC]. | 1145 |
| 5390-0049 | Whelen 600 series 26 degree scene lights (PR) with LH46001 castings. Switch in cab (side facing lights switched separately). Locate [#LOC]. | 500 |
| 5390-0059 | Whelen 600 series 26 degree scene lights (PR) with diamond plate mounting box. Switch in cab (side facing lights switched separately). Locate [#LOC]. | 623 |
| 5390-0066 | Whelen 600 series gradient Super LED scene lights (PR) with weatherproof connectors and diamond plate mounting boxes. Switch in cab (driver and officer side lights switched separately). Locate [#LOC]. | 1254 |
| 5390-0068 | Havis Shield 12V HID scene lights model KR-4035X-D (PR). Location(s): [#LOC]. Includes switch in cab for side facing lights. | 1812 |
| 5390-0069 | Whelen M9 Linear Super LED scene lights (PR). Switched in cab (lights mtd on the sides of apparatus to be switched separately). Locate [#LOC]. | 1868 |
| 5390-0070 | Crosslay light Collins FX-12. Locate to rear of crosslay (SM) and forward of crosslay (TM as applicable). | 602 |
| 5390-0071 | Hosebed light Collins FX-12. Located center front of hosebed. Switched with work light switch in cab | 602 |
| 5390-0077 | Deck Lt-Collins FX-12R (EA) model KR-SB-312 with lift/push up pole. Due to body mount location a position indicator will not be required. Location(s): [#LOC]. | 1010 |
| 5390-0079 | Whelen 900 series Gradient Opti-Scene light (EA) with weatherproof connectors. Switch in cab (driver and officer side facing lights switched separately). Locate [#LOC]. | 198 |
| 5390-0082 | Whelen 600 series 26 degree scene 24VDC lights (PR) with weatherproof connectors. Switch in cab (driver and officer side facing lights switched separately). Locate [#LOC]. | 421 |
| 5390-0087 | Whelen M6 Linear Super LED scene lights (PR). Switched in cab (lights mtd on the sides of apparatus to be switched separately). Locate [#LOC]. | 1342 |
| 5390-0103 | Whelen 700 series gradient Super LED scene lights (PR) with weatherproof connectors. Switch in cab (driver and officer side lights switched separately). Locate [#LOC]. | 1111 |
| 5390-0122 | Whelen 900 series model 90C0ENZR Super LED Opti-Scene light (PR) with cast products mounting box. Switch in cab (driver and officer side lights switched separately). Locate [#LOC]. | 2087 |
| 5390-0123 | Federal Signal model QL97LEDSCENE LED scene light (PR) with weatherproof connectors. Includes switch accessible to driver (driver and officer side lights switched separately). Locate [#LOC]. | 1118 |
| 5390-0132 | Warning light Federal Signal QL64-BACKUP (PR) white with clear lens. Surface mounted with bezel. Location: [#LOC] | 697 |
| 5390-0133 | Deck lights - Unity 12 volt LED spot (PR). Location: [#LOC]. | 1148 |
| 5390-0136 | Whelen M9LZC Linear Super LED scene lights (PR) includes flange. Switched in cab (lights mounted on the sides of apparatus to be switched separately). Locate [#LOC]. | 1731 |
| 5390-0137 | Whelen M9 Linear Super LED scene lights (PR) with weatherproof connectors and diamond plate mounting boxes. Switch in cab (driver and officer side lights switched separately). Locate [#LOC]. | 2065 |
| 5390-0140 | Whelen 700 series gradient Super LED scene light (EA) with weatherproof connector(s). Switch in cab (driver and officer side lights if applicable switched separately). Locate [#LOC]. | 545 |
| 5390-0144 | Unity deck light with model TP-1-I internal pull-up pole. Includes switch on lighthead and driver side overhead console. Location: [#LOC]. | 674 |
| 5390-0149 | Whelen 900 series model 90C0ENZR Super LED Opti-Scene light (EA) with diamond plate mounting box. Switch in cab (driver and officer side lights switched separately). Locate [#LOC]. | 1044 |
| 5390-0150 | Whelen 900 series model 90C0ENZR Super LED Opti-Scene light (EA) with cast products mounting box. Switch in cab (driver and officer side light(s) switched separately). Locate [#LOC]. | 1044 |

| Item No. | Description | |
|---|---|---|
| 5390-0151 | Whelen M6 Linear Super LED scene lights (PR) with weatherproof connectors and diamond plate mounting boxes. Location: [#LOC]. Switched with worklight switch in cab. | 1542 |
| 5390-0152 | Whelen 600 series gradient Super LED surface mounted scene lights (PR) with weatherproof connectors. Switch in cab (driver and officer side lights switched separately). Locate [#LOC]. | 1145 |
| 5390-0154 | Weldon model 3010-2600-30 scene lights (PR) with diamond plate mounting box. Switch in cab (driver and officer side facing lights switched separately). Locate [#LOC]. | 850 |
| 5390-0156 | Federal Signal model QL97LEDSCENE LED scene light (EA) with weatherproof connectors. Includes switch accessible to driver (driver and officer side lights switched separately). Locate [#LOC]. | 561 |
| 5390-0161 | Whelen M9 Linear Super LED scene lights (PR) with weatherproof connectors and smooth plate mounting boxes painted job (2-tone if applicable) color. Switch in cab (driver and officer side lights switched separately). Locate [#LOC]. | 2126 |
| 5390-0164 | Whelen 900 series model 9SC0ENZR Super LED Opti-Scene light (PR) with weatherproof connectors. Switch in cab (driver and officer side lights switched separately). Locate [#LOC]. | 1888 |
| 5390-0165 | Whelen 900 series model 9SC0ENZR Super LED Opti-Scene light (PR) with diamond plate mounting box. Switch in cab (driver and officer side lights switched separately). Locate [#LOC]. | 2087 |
| 5390-0166 | FRC LED900 Scene light (EA). Switch in cab (driver and officer side lights switched separately). Locate [#LOC]. | 940 |
| 5390-0169 | Deck light FireTech model FT-WL3500-60 LED (PR). Switched with work light switch in cab. Location: [#LOC]. | 870 |
| 5390-0170 | Whelen M6 Linear Super LED scene light (EA). Switched in cab (lights mtd on the sides of apparatus to be switched separately). Locate [#LOC]. | 672 |
| 5390-0173 | Federal Signal model 64LEDSCENE LED scene light (PR) with weatherproof connectors. Includes switch accessible to driver (driver and officer side lights switched separately). Locate [#LOC]. | 1169 |
| 5390-0182 | Crosslay light Amdor H2O. Locate at the front body above crosslay. Switched with work light switch in cab. | 545 |
| 5390-0184 | FireTech 8" 12V double stack mini brow light (PR). Includes switch in cab (driver and officer side facing lights switched separately). Location: [#LOC]. | 2277 |
| 5390-0185 | Hose bed light Federal Signal 64LEDSCENE. Locate at the front area of hose bed. Switched with work light switch in cab. Includes diamond plate mounting box. | 696 |
| 5390-0186 | FRC SPA900-Q70 Scene light (PR). Switch in cab (driver and officer side lights switched separately). Locate [#LOC]. | 1878 |
| 5390-0187 | Whelen 900 series model 9SC0ENZR Super LED Opti-Scene light (1 EA) with weatherproof connector. Switch in cab (driver and officer side lights switched separately). Locate [#LOC]. | 944 |
| 5390-0188 | Diamond plate mounting boxes (4). For use with scene lights and/or warning lights. Locate on driver and officer side forward and rearward compartment tops outboard; boxes to be full depth of compartment top. | 987 |
| 5390-0191 | Whelen M9 Linear Super LED scene lights (EA). Switched in cab (lights mtd on the sides of apparatus to be switched separately). Locate [#LOC]. | 934 |
| 5390-0193 | FRC SPA900-Q70 Scene light (PR) with diamond plate mounting box. Switch in cab (driver and officer side lights switched separately). Locate [#LOC]. | 2078 |
| 5390-0194 | Whelen PELCC crosslay lights LED (PR). Wired through work light switch. Location: (1) each side up high back of cab. | 691 |
| 5390-0195 | Side Body scene lights are to be switched with park brake in addition to standard. | 89 |
| 5390-0196 | FireTech 8" 12V double stack mini brow light (PR) powder coated black. Includes switch in cab (driver and officer side facing lights switched separately). Location: [#LOC]. | 2277 |
| 5390-0197 | Deck light FireTech model FT-WL3500-60-C driver FT-WL3500-60 officer LED (PR). Driver includes rear camera; requires Vista display. Switched with work light switch in cab. Location: [#LOC]. | 1673 |
| 5390-0199 | Whelen 700 series gradient Super LED scene lights (PR) with LH37101 castings and weatherproof connectors. Switch in cab (driver and officer side lights switched separately). Locate [#LOC]. | 1209 |
| 5390-0200 | Federal Signal Commander model COM7K-900 scene light (PR). Switch in cab (driver and officer side lights switched separately). Locate [#LOC]. | 1878 |
| 5390-0204 | Whelen M7 Linear Super LED scene lights (PR). Switched in cab (lights mtd on the sides of apparatus to be switched separately). Locate [#LOC]. | 771 |
| 5390-0205 | Code3 model 79SCBZ LED scene light (PR) with weatherproof connectors. Switch in cab (driver and officer side facing lights switched separately). Locate [#LOC]. | 1310 |
| 5390-0207 | FRC SPA900-Q70 Scene light (EA). Switch in cab (driver and officer side lights switched separately). Locate [#LOC]. | 939 |
| 5390-0208 | Whelen M6 Linear Super LED scene light in a diamond plate box (EA). Switched in cab (lights mtd on the sides of apparatus to be switched separately). Locate [#LOC]. | 672 |
| 5390-0214 | Federal Signal model 64LEDSCENE LED scene light (PR) with diamond plate mounting box and weatherproof connectors. Includes switch accessible to driver (driver and officer side lights switched separately). Location: [#LOC]. | 1348 |

| Item No. | Description | |
|---|---|---|
| 5390-0220 | Whelen 700 series gradient Super LED scene lights (PR) with weatherproof connectors and diamond plate mounting box. Switch in cab (driver and officer side lights switched separately). Locate [#LOC]. | 1285 |
| 5390-0221 | Whelen M6 Linear Super LED scene lights (PR) with black bezels. Switched in cab (lights mtd on the sides of apparatus to be switched separately). Locate [#LOC]. | 1342 |
| 5390-0222 | Deck light FireTech model FT-WL3500-60-W LED (PR). Switched with work light switch in cab. Location: [#LOC]. | 870 |
| 5400-0003 | Engine compartment light (EA). | 144 |
| 5400-0012 | Light Fluorescent (EA). Locate [#LOC] | 268 |
| 5400-0020 | Federal NightFighter light with internal pole. Locate [#LOC]. Switched on light head. | 1447 |
| 5400-0021 | Federal NightFighter Light with External Pole. Locate [#LOC]. Switched on light head. | 2504 |
| 5400-0031 | Pair of Cab Dome Large Lights mounted driver and officer side front. N/A on E-One Chassis. Required on Comm Chassis. | 86 |
| 5400-0032 | Pair of Cab Dome Large Lights mounted driver and officer side Rear. N/A on E-One Chassis or two door commercial chassis. Required on Comm Chassis. | 86 |
| 5400-0037 | Dome Lts Red/White Incandescent. Package includes two lights mounted in the front and two mounted in the rear of the cab. White light wire through door and light assembly mounted switch. Red light through light assembly mounted switch. | 623 |
| 5400-0039 | Spotlight Specialty 2150 hand held located on officer's side of cab dash - hardwired. | 437 |
| 5400-0041 | Spotlight Federal Visibeam II Remote. If one is selected it will be located centered on cab roof mounted on a bracket. If two are selected they will be located one each side of cab roof to rear of light bar. | 771 |
| 5400-0042 | Map light Sunnex [#LOC]. | 374 |
| 5400-0061 | Golight model 2049 remote control spotlight with black housing. If one is selected it will be located centered on cab roof on a pedestal to rear of light bar. If two are selected they will be located one each side of cab roof to rear of light bar. | 962 |
| 5400-0062 | Code 3 model GLB3200 remote control spotlight with black housing. If one is selected it will be located centered on cab roof on a pedistal to rear of lightbar. If two are selected they will be located one each side of cab roof to rear of lightbar. | 1375 |
| 5400-0064 | Dome Lts Red/White 4" LED (5). Lights to be located two front and three rear. White light wired through door and light assembly mounted rocker switch. Red light through light assembly mounted rocker switch. | 2098 |
| 5400-0065 | Map light Littlite 18" flexible LED. Location: [#LOC]. | 289 |
| 5400-0076 | Golight model 2020 permanent spotlight. Location: Centered top of lightbar. | 762 |
| 5400-0080 | FRC Night Master light with external push-up pole. Locate [#LOC]. Switched on light head. | 1385 |
| 5400-0081 | Golight model 2067 remote control spot light with white housing. If one is selected it will be located centered on cab roof on a pedestal to rear of light bar. If two are selected they will be located one each side of cab roof to rear of light bar. | 962 |
| 5400-0082 | Maplight-Little Lt 18" Flex [#LOC]. Includes dimmer switch. | 252 |
| 5400-0086 | Spotlight Specialty 2150 hand held located on font of map box - hardwired. | 437 |
| 5400-0091 | Zico cornering light (PR) with polished stainless steel housing model #ZQL-SS-H7614 wired through turn signals. Includes cornering light relay. Lights to be directed downward. Location: (1) each side of gravel shield (forward). | 1145 |
| 5400-0104 | Spotlight Specialty 2150 hand held located on officer's side side facing engine cover offset forward below cab dash - hardwired. | 437 |
| 5400-0112 | Backing light (PR) Innovative LIghting with polished housing model #580-0200-1 light bulb is a halogen MR16. Location: [#LOC]. | 409 |
| 5400-0125 | SpotLt-Fed VisibeamII Remote. Officer side of cab roof to rear of lightbar mounted on a bracket. | 771 |
| 5400-0130 | Spotlight Optronics Blue Eye model KB4003 hand held located on officer's side of cab dash - hardwired. | 262 |
| 5400-0133 | Golight model 2067 remote control spotlight with white housing. Locate (1) each side cab corner outboard of forward facing lightbar without pedestal. Requires additional side facing warning lights to meet NFPA. | 962 |
| 5400-0145 | Pair of Cab Dome Large Lights mounted driver (clear) and officer (red) side front. N/A on E-One Chassis. Required on Comm Chassis. | 86 |
| 5400-0148 | Maplight-Little Lt 12" Flex LED. Location: [#LOC]. | 289 |
| 5400-0154 | Spotlight Specialty 2150 hand held located on center of cab dash with plug-in connector. | 437 |
| 5400-0155 | Cab Dome Large Light (PR). (1) mounted centered centered in the front and rear headliners. N/A on E-0ne Chassis. Required on Comm Chassis. | 86 |
| 5400-0157 | Spotlight Whelen PAR46 Super LED hand held located on officer's side of cab dash - hardwired. Mounted to not obstruct driver view of passenger corner mounted mirror (if equipped). | 717 |
| 5400-0173 | Spotlight Whelen PAR46 Super LED hand held located on officer's side of cab dash with plug-in connector. | 717 |

| Item No. | Description | |
|---|---|---|
| 5400-0188 | Golight model 30201 remote control HID spot light with white housing. If one is selected it will be located centered on cab roof on a pedestal to rear of light bar. If two are selected they will be located one each side of cab roof to rear of light bar. | 1047 |
| 5400-0189 | Golight model 2020 permanent spotlight with white housing. Centered on forward cab roof. | 962 |
| 5400-0196 | TecNiq LED backing lights (PR) model E960. Location: [#LOC]. | 496 |
| 5400-0198 | Map light Sunnex LED model SL9-220. Location: [#LOC]. | 806 |
| 5400-0199 | Pump panel light additional EON LED. Locate (2) driver side up high and (2) officer side up high. | 134 |
| 5400-0202 | Spotlight Whelen PAR46 Super LED hand held located on officer's side of cab dash - hardwired. Ship bracket loose. | 717 |
| 5400-0203 | Light EON LED. (Pair) Includes activation switch. Locate: Below light bar brackts rear facing on body up high (1) light centered below light bar brackets as far aft as possible on each side of body. | 498 |
| 5400-0205 | Pump panel light additional EON LED. Locate driver side pump panel above additional switches wired through park brake. | 134 |
| 5400-0206 | Golight model 2067 remote control spotlight with white housing. Locate driver side cab roof ahead of vista. Locate controller center of dash offset to driver. | 962 |
| 5400-0211 | Whelen 600 series Super LED green. Locate driver side rear of body below upper level warning. Includes switch on pump panel labeled "HYDRANT". | 683 |
| 5400-0215 | Light Tecniq LED counter top light (pair). Locate: inside walk in body (1) one on bottom of each overhead cabinet to illuminate the counter top below on forward bulkhead. | 165 |
| 5400-0216 | Golight model 20214 remote control LED spot light with black housing. Officer side rear of light bar. | 1452 |
| 5400-0218 | Golight model 20214 remote control LED spot light with black housing. If one is selected it will be located centered on cab roof on a pedestal to rear of lightbar. If two are selected they will be located one each side of cab roof to rear of lightbar. | 1452 |
| 5450-0004 | Quartz light KwikRaze 500W/110V model KR-SB-505-W/2-I with external telepole. Location(s): [#LOC] | 1223 |
| 5450-0005 | Quartz light Kwik Raze 500W/110V portable. Location(s): [#LOC]. | 496 |
| 5450-0006 | Quartz light KwikRaze 500W/110V model KR-SB-805-TM-I with external mount tripod telepole. Requires 110V receptacle. Location(s): [#LOC] | 1815 |
| 5450-0007 | Quartz light Kwik Raze 500W/110V with recess mount. Location(s): [#LOC]. | 1130 |
| 5450-0009 | Quartz light Fire Research Focus 750W/110V model FCA530-S75-SR-SW with side mount push-up pole. Location(s): [#LOC]. | 1823 |
| 5450-0010 | Quartz light Fire Research Focus 1000W/240V model FCA200-M12 with recess mount. Location(s): [#LOC]. | 969 |
| 5450-0011 | Quartz light Fire Research Optimum 900W/240V model OPA200-R90 with recess mount. Location(s): [#LOC]. | 1267 |
| 5450-0012 | Quartz light Fire Research Focus 750W/110V model FCA570-S75 without pole. Location(s): [#LOC]. | 1345 |
| 5450-0015 | Quartz light Fire Research Focus 750W/120V model FCA600-S75-ON-FC603 with 40" telescopic tripod pole. Location(s): [#LOC]. | 1844 |
| 5450-0020 | Quartz light Fire Research Focus 1500W/240V model FCA600-M15-ON-FC603 with telescopic tripod pole. Location(s): [#LOC]. | 1944 |
| 5450-0028 | Quartz light Fire Research Optimum 750W/110V model OPA530-S75-SR-SW with side mount external pole. Location(s): [#LOC]. | 1874 |
| 5450-0030 | Quartz light Fire Research Optimum 750W/110V model OPA600-S75-ON-OP603 with 40" telescopic tripod pole. Location(s): [#LOC]. | 1863 |
| 5450-0032 | Quartz light Fire Research Optimum 900W/240V model OPA600-R90-ON-OP603 with telescopic tripod pole. Location(s): [#LOC] | 1981 |
| 5450-0034 | Quartz light MagnaFire 900W/240V model KR-739-HD with portable base. Requires 220V receptacle. Location(s): [#LOC] | 727 |
| 5450-0035 | Quartz light MagnaFire 900W/240V model KR-1939 with recess mount. Location(s): [#LOC]. | 1004 |
| 5450-0038 | Quartz light MagnaFire 900W/240V model KR-SB-539-W/2-I with external pole. Location(s): [#LOC]. | 1448 |
| 5450-0039 | Quartz light MagnaFire 900W/240V model KR-SB-839-TM-I with external mount tripod telepole. Requires 220 volt receptacle. Location(s): [#LOC]. | 1575 |
| 5450-0045 | Quartz light MagnaFire 750W/120V model KR-736-HD with portable base. Requires 110V receptacle. Location(s): [#LOC] | 671 |
| 5450-0046 | Quartz light MagnaFire 750W/120V model KR-1936 with recess mount. Location(s): [#LOC]. | 1042 |
| 5450-0049 | Quartz light MagnaFire 750W/120V model KR-SB-536-W/2-I with external pole. Location(s): [#LOC]. | 1518 |
| 5450-0050 | Quartz light MagnaFire 750W/120V model KR-SB-836-TM-I with external mount tripod telepole. Requires 110V receptacle. Location(s): [#LOC]. | 1749 |
| 5450-0056 | Quartz light KwikRaze 1500W/220V model KR-SB-815-TM-I with external mount tripod telepole. Requires 220V receptacle. Location(s): [#LOC] | 1880 |
| 5450-0059 | Quartz light Fire Research Optimum 750W/110V portable model OPA700-S75-OP703. Location(s): [#LOC]. | 950 |

| Item No. | Description | |
|---|---|---|
| 5450-0065 | Quartz light Fire Research Optimum 1000W/240V model OPA656-M12-ON-OP603 with telescopic tripod pole. Location(s): [#LOC] | 1981 |
| 5450-0070 | Quartz light MagnaFire 5000 500W/120V model KR-SB-555-W/2-I with external pole. Location(s): [#LOC]. | 1315 |
| 5450-0071 | Quartz light Fire Research Optimum 750W/110V model OPA200-S75 with recess mount. Location(s): [#LOC]. | 1134 |
| 5450-0074 | Quartz light timer (ea). | 159 |
| 5450-0081 | Quartz light Fire Research Optimum 750W/110V model OPA656-S75-ON-OP603 with 28" telescopic tripod pole. Location(s): [#LOC] | 1863 |
| 5450-0083 | Quartz light Fire Research Focus 1500W/240V model FCA530-M15-SR-SW with side mount push up pole. Location(s): [#LOC]. | 1830 |
| 5450-0089 | Quartz light MagnaFire 900W/240V model KR-SB-539-W/2-I with external pole. Light head to be powder coated black. Location(s): [#LOC]. | 1502 |
| 5450-0092 | Quartz light Fire Research Focus 750W/110V model FCA530-S75-SR-SW with side mount push-up pole. Light head and mounts to be powder coated black. Location(s): [#LOC]. | 1877 |
| 5450-0096 | Quartz light Fire Research Optimum 1000W/110V portable model OPA700-M10-OP703. Location(s): [#LOC]. | 1083 |
| 5450-0098 | Quartz light Fire Research Optimum 1500W/240V model OPA600-M15-ON-OP603 with telescopic tripod pole. Location(s): [#LOC] | 2060 |
| 5450-0099 | Quartz light Fire Research Optimum 1500W/240V model OPA200-M15 with recess mount. Location(s):[#LOC]. | 1156 |
| 5450-0102 | Quartz light Fire Research Focus 1000W/120V model FCA530-M10-SR-SW-ON with external push up pole. Location(s): [#LOC]. | 1944 |
| 5450-0114 | Quartz light Fire Research Focus 1000W/120V model FCA200-M10 with recess mount. Location(s): [#LOC]. | 969 |
| 5450-0116 | Quartz light Fire Research Focus 500W/110V model FCA600-S50-ON-FC603 with 40" telescopic tripod pole. Location(s): [#LOC]. | 1844 |
| 5450-0118 | Quartz light Fire Research Focus 1000W/240V model FCA802-M12-01 with brow mount (EA). Location(s): [#LOC]. | 1107 |
| 5450-0121 | Quartz light Fire Research Focus 1500W/240V model FCA530-M15-SR-SW-ON with external push up pole. Location(s): [#LOC]. | 1848 |
| 5450-0126 | Quartz light Fire Research Focus 750W/110V model FCA642-S75-ON-FC6F3 with 16.625" telescopic tripod pole. Location(s): [#LOC]. | 1844 |
| 5450-0141 | Quartz light Fire Research Optimum 150W/12V model OPA230-H15 with recess mount. Includes switch in cab console. Location(s): [#LOC]. | 1794 |
| 5450-0144 | Fire Research FRC Evolution 12V LED scene light model FCA530-V15-SW-H with external push-up pole. Includes switch in cab accessible to driver. Location: [#LOC]. | 2640 |
| 5450-0154 | Fire Research Evolution 12V LED scene light model FCA510E-V15-SW with internal pull-up pole. Includes switch accessible to driver. Location: [#LOC]. | 2640 |
| 5450-0169 | Quartz light MagnaFire 750W/120V model KR-SB-836-TM-SL-I with external mount tripod telepole. Requires 110V receptacle. Location(s): [#LOC]. | 1749 |
| 5450-0170 | Fire Research Evolution 12V LED model FCA210-V12 with recess mount. Includes switch in cab accessible to driver. Location(s): [#LOC]. | 2095 |
| 5450-0181 | Light Fire Research Spectra 12V LED model SPA510E-Q20-SW with internal pull-up pole. Includes switch accessible to driver. Location(s): [#LOC]. | 3159 |
| 5450-0183 | Fire Research Spectra 12V LED scene light model SPA530E-Q20-SW-H with external push-up pole. Includes switch in cab accessible to driver. Location: [#LOC]. | 3157 |
| 5450-0188 | Quartz light MagnaFire 5000 500W/120V model KR-SB-555-W/2-I-SL with (special length) external pole. Location(s): [#LOC]. | 1315 |
| 5450-0192 | Light Fire Research Spectra 120V LED model SPA830-K20 with universal brow mount (EA). Location: [#LOC]. | 2758 |
| 5450-0200 | Fire Research Spectra 120V LED scene light model SPA530-K20-SW-H with external push-up pole. Location: [#LOC]. | 3157 |
| 5450-0208 | Fire Research Spectra 12V LED model SPA802-Q20-02 with brow mount (EA). Includes switch accessible to driver. Location: [#LOC]. | 2758 |
| 5450-0210 | Light Fire Research Spectra LED 240V model SPA570-J20 without pole. Location(s): [#LOC]. | 2919 |
| 5450-0211 | Light Fire Research Spectra 240V LED model SPA512-J20-SW with internal thru roof push up pole. Includes switch accessible to driver. Location(s): [#LOC]. | 3361 |
| 5450-0212 | Quartz light Fire Research Focus 1500W/240V model FCA570-M15 without pole. Location(s): [#LOC]. | 1468 |
| 5450-0216 | Quartz light Fire Research Spectra 120V LED model SPA802-K20-02 with brow mount (EA). Location: [#LOC]. | 2758 |
| 5450-0218 | Fire Research Evolution 12V LED model FCA210-V12 with recess mount powder coated black. Includes switch in cab accessible to driver. Location(s):[#LOC]. | 2143 |

| Item No. | Description | |
|---|---|---|
| 5450-0220 | Quartz light MagnaFire 750W/120V model KR-1936 with recess mount in diamond plate mounting box. Location(s): [#LOC]. | 1236 |
| 5450-0223 | Quartz light MagnaFire 750W/120V model KR-SB-536-W/2-I with external pole. Light head to be powder coated black. Location(s): [#LOC]. | 1576 |
| 5450-0224 | Quartz light Fire Research Focus 1000W/120V model FCA600-M10-ON-6F3 with telescopic tripod pole. Location(s): [#LOC]. | 1995 |
| 5450-0247 | Quartz light MagnaFire 750W/120V model KR-1936 with recess mount powder coated black. Location(s): [#LOC]. | 1089 |
| 5450-0255 | Light Fire Research Evolution LED 12V model FCA580-V15 side fixed mount. Includes switch accessible to driver. Location(s): [#LOC]. | 2151 |
| 5450-0256 | Floodlight Whelen PFP1AC 120v with external mount tripod telepole. Requires 110V receptacle. Location(s): [#LOC]. | 2918 |
| 5450-0257 | Light Whelen Pioneer model PFP2 12V with external bottom raise pole mount. Includes switch accessible to driver. Location(s): [#LOC]. | 2873 |
| 5450-0262 | Light Whelen Pioneer model PFP2 12V with external bottom raise pole mount. Includes switch accessible to driver. Location(s): [#LOC]. | 2890 |
| 5450-0267 | Light Whelen 150W/120V with portable base. Requires 110V receptacle. Location(s): [#LOC]. | 2697 |
| 5450-0268 | Light Fire Research Spectra LED 120V model SPA570-K20 without pole powder coated black. Location(s): [#LOC]. | 2976 |
| 5450-0270 | Fire Research Evolution 12V LED scene light model FCA510E-V15-SW with internal pull-up pole powder coated black. Includes switch accessible to driver. Location: [#LOC]. | 2700 |
| 5450-0271 | Akron SceneStar 120V LED model ELSS-XLAC-SM2-PS-UI-TL. Location: [#LOC]. | 2577 |
| 5450-0273 | Quartz light Fire Research Optimum 1500W/240V model OPA642-M15-ON-603 with 16.625" telescopic tripod pole. Location(s): [#LOC]. | 1937 |
| 5450-0274 | Fire Research Spectra 12V LED scene light model SPA530E-Q20-SW-H with external push-up pole powder coated black. Includes switch in cab accessible to driver. Location: [#LOC]. | 3215 |
| 5450-0276 | Akron SceneStar 12V LED model ELSS-XLDC-PU-UI-TL. Location:[#LOC]. | 2249 |
| 5450-0277 | Light Whelen Pioneer model PFP2 12V powder coated black with external bottom raise pole mount. Includes switch accessible to driver. Location(s) [#LOC]. | 2873 |
| 5450-0284 | Light Whelen 150W/120V with portable base powder coated black. Requires 110V receptacle. Location(s): [#LOC]. | 2697 |
| 5450-0289 | Light Whelen Pioneer model PFP1 12V with external bottom raise custom length pole. Includes switch accessible to driver. Location(s): [#LOC]. | 1998 |
| 5450-0294 | Light Whelen Pioneer Max model PCP3 12V with Whelen external bottom raise pole mount. Includes switch accessible to driver. Location(s): [#LOC]. | 3275 |
| 5450-0295 | LED scene light ExtendaLite 220W/12V model ELSS-XLDC-PS-SM2-UI-SW with telescopic external push-up pole. Includes switch accessible to driver in cab. Location(s): [#LOC]. | 2533 |
| 5450-0297 | Light Fire Research Spectra LED 110V model SPA700-K20 with portable mount. Requires 110V receptacle. Location(s): [#LOC]. | 2669 |
| 5450-0305 | Akron SceneStar 12V LED model ELSS-SLDC-PU-UI-TL. Location: [#LOC]. | 2168 |
| 5450-0308 | Light Whelen Slimline Pioneer Plus model PSL2 12V with Freightliner center brow mount. Includes switch in cab accessible to driver. | 1692 |
| 5450-0312 | Quartz light Fire Research Optimum 1000W/240V model OPA530-M12-SR-SW-ON with external push up pole. Location(s): [#LOC]. | 1721 |
| 5450-0315 | Quartz light Fire Research Optimum 750W/110V model OPA642-S75-ON-603 with 16.625" telescopic tripod pole. Location(s): [#LOC]. | 1863 |
| 5450-0317 | Quartz light Fire Research Focus 1000W/120V model FCA530-M10-CL50-SR-SW-ON with external push up pole. Location(s): [#LOC]. | 1944 |
| 5450-0319 | Akron SceneStar 12V LED model ELSS-XLDC-SM2-PS-UI-TL. Includes switch accessible to driver. Location: [#LOC]. | 2577 |
| 5450-0325 | Light Whelen Pioneer model PCP2 with chrome surface mount. Includes switch in cab accessible to driver (driver and officer side facing lights switched separately). Location: [#LOC]. | 2240 |
| 5450-0328 | Federal Signal Commander 12V LED scene light model COMLC15K-510E-SW with internal pull-up pole. Includes switch accessible to driver. Location: [#LOC]. | 2640 |
| 5450-0330 | Diamond plate mounting boxes (4). For use with scene lights and warning lights. Locate on driver side forward and rearward compartment tops outboard; boxes to be full depth of compartment top. Officer side forward and rearward upper body corners. | 987 |
| 5450-0334 | Akron SceneStar 120V LED model ELSS-XLAC-RM recess mount. Location: [#LOC]. | 2167 |
| 5450-0335 | LED light Akron SceneStar 220W/12V model ELSS-XLDC-BL. Includeds switch accessible to driver. Location(s): [#LOC]. | 2363 |
| 5450-0344 | Light Whelen Slimline Pioneer Plus model PSL2 12V with recess mount. Includes switch in cab accessible to driver (side facing lights switched seperately). Location: [#LOC]. | 1452 |
| 5450-0345 | Quartz light Fire Research Optimum 750W/110V model OPA200-S75 with recess mount with diamond plate box. Location(s): [#LOC]. | 1320 |

| Item No. | Description | |
|---|---|---|
| 5450-0347 | Quartz light Fire Research Optimum 750W/110V portable model OPA700-S75-OP703 powder coated black. Location(s): [#LOC]. | 1032 |
| 5450-0353 | Light Fire Research Spectra 12V LED model SPA850-Q20 with flat mount. Location: [#LOC]. | 2689 |
| 5450-0355 | Fire Research Spectra 120V LED scene light model SPA540-K20-CL-SW-H powder coated black with external pull-up pole. Location: [#LOC]. | 3209 |
| 5450-0359 | Federal Signal Commander 12V LED scene light model COMM15K-530-SW-H with external push-up pole. Includes switch in cab accessible to driver. Location: [#LOC]. | 2640 |
| 5450-0362 | FireTech 21" 12V recessed mini brow light model FT-MB-2.18-W. Location: [#LOC]. | 2187 |
| 5450-0363 | Light Whelen Pioneer model PCP1SM1C with chrome surface mount. Includes switch in cab accessible to driver (driver and officer side facing lights switched separately). Location: [#LOC]. | 1322 |
| 5450-0366 | Fire Research Spectra Max 12V LED model SPA802-Q28-02 with brow mount (EA). Includes switch accessible to driver. Location: [#LOC]. | 3007 |
| 5450-0368 | No exposed wire connection for FireTech 72" 12V brow light with integrated marker lights. Locate: Front of cab roof. | 273 |
| 5450-0369 | No exposed wire connection for FireTech 12V mini brow light. Locate: Roll up door header B1. | 273 |
| 5450-0371 | Light Fire Research Spectra MS 12V LED model SPA510E-R14-SW with internal pull-up pole. Includes switch accessible to driver. Location(s): [#LOC]. | 2165 |
| 5450-0372 | Fire Research Mini-Spectra 12V LED scene light model SPA530-R14-CL-SW-H with external push-up pole. Location: [#LOC]. | 2391 |
| 5450-0377 | Light Whelen Slimline Pioneer Plus model PSL2 12V with Freightliner driver/officer brow mounts (PR). Includes switch in cab accessible to driver. | 3033 |
| 5450-0378 | Light Whelen Pioneer model PCP2SM2C with smooth plate mounting box painted job color (two-tone job color if applicable). Includes switch in cab accessible to driver (driver and officer side facing lights switched separately). Location: [#LOC]. | 2446 |
| 5450-0379 | Light Whelen Pioneer model PCP2SM2C with diamond plate mounting box. Includes switch in cab accessible to driver (driver and officer side facing lights switched separately). Location: [#LOC]. | 2331 |
| 5450-0380 | Light Whelen Pioneer model PCPSM1B with black surface mount. Includes switch in cab accessible to driver (driver and officer side facing lights switched separately). Location: [#LOC]. | 1322 |
| 5450-0386 | Quartz light Fire Research Focus 1000W/240V model FCA510E-M12-SW with internal pull up pole. Location(s): [#LOC]. | 1787 |
| 5450-0388 | Fire Research Mini-Spectra 120V LED scene light model SPA530-T14-SW-H with external push-up pole. Location: [#LOC]. | 2280 |
| 5450-0391 | Light Whelen Pioneer model PCP2SM2B with black surface mount. Includes switch in cab accessible to driver (driver and officer side facing lights switched separately). Location: [#LOC]. | 2240 |
| 5450-0392 | Light Whelen Pioneer model PCP2SM2B with black housing and diamond plate mounting box. Includes switch in cab accessible to driver (driver and officer side facing lights switched separately). Location: [#LOC]. | 2331 |
| 5450-0393 | Light Whelen Pioneer model PCP2SM2B with black housing and painted smooth plate mounting box. Includes switch in cab accessible to driver (driver and officer side facing lights switched separately). Location: [#LOC]. | 2389 |
| 5450-0394 | Fire Research Spectra Max 12V LED model SPA802-Q28-02 with brow mount (EA) powder coated black. Includes switch accessible to driver. Location: [#LOC]. | 3064 |
| 5450-0402 | Light Whelen PCP3AP1 225W/120V with portable base. Requires 110V receptacle. Location(s): [#LOC]. | 3016 |
| 5450-0403 | Light Whelen Pioneer Max model PCP3 120V with Whelen external bottom raise pole mount. Location(s): [#LOC]. | 3275 |
| 5450-0404 | Light Fire Research Spectra Max LED 120V model SPA570-K28 without pole. Location(s): [#LOC]. | 3039 |
| 5450-0405 | Fire Research Mini Spectra 12V LED model SPA802-R14-02 with brow mount (EA). Includes switch accessible to driver. Location: [#LOC].. | 1856 |
| 5450-0406 | Fire Research FRC Evolution 12V LED scene light model FCA530-V15-SW-H with external push-up pole powder coated black. Includes switch in cab accessible to driver. Location: [#LOC]. | 2684 |
| 5450-0407 | Quartz light Fire Research Spectra 120V LED model SPA802-K20-02 with brow mount (EA) powder coated black. Location: [#LOC]. | 2811 |
| 5450-0413 | Light Fire Research Spectra 12V LED model SPA510E-Q20-SW with internal pull-up pole powder coated black. Includes switch accessible to driver. Location(s): [#LOC]. | 3212 |
| 5450-0418 | Light Whelen 12V Pioneer model PFS2 with external bottom raise pole mount. Includes switch accessible to driver. Location(s) [#LOC]. | 2873 |
| 5450-0423 | Light Whelen Pioneer model PFS2 powder coated black with PBA203 recess mount in smooth plate mounting boxes painted job (2-tone if applicable) color. Includes switch in cab (driver and officer side facing lights switched separately). Location: [#LOC]. | 2770 |
| 5450-0424 | Light Whelen 12V Pioneer model PFS2 powder coated black with PBA203 recess mount. Includes switch in cab accessible to driver (driver and officer side facing lights switched separately). Location: [#LOC]. | 2526 |
| 5450-0431 | Recess mounting for FireTech scene light. Location: [#LOC]. | 458 |

| Item No. | Description | |
|---|---|---|
| 5450-0434 | FireTech 46" 12V front brow light with white housing on commercial cab. Includes fabricated high light bar mounts brow light mount between light bar mounts and switch accessible to driver. | 3341 |
| 5450-0437 | Akron Revel 12V LED model ELRE-SLDC-PU-UI-TL. Includes switch accessible to driver. Location: [#LOC]. | 1830 |
| 5450-0439 | Light Whelen PCP3AP1 120V with external mount tripod telepole powder coated black. Requires 110V receptacle. Location(s): [#LOC]. | 4240 |
| 5460-0000 | Light tower Night Scan Powerlite NS3.0-3000M with four 750 watt 115 volt MagnaFire quartz light heads. Requires air brakes or air system and auxiliary air tank. Tower to be located [#LOC]. | 25211 |
| 5460-0001 | Night Scan Powerlite NS3.0-4500M light tower with six 750 watt 115 volt MagnaFire quartz light heads. Control to be located next to the breaker box. Requires air brakes or air system and auxiliary air tank. Tower to be located [#LOC]. | 27473 |
| 5460-0002 | Night Scan Powerlite NS4.5-3000M light tower with four 750 watt 115 volt MagnaFire quartz light heads. Control to be located next to the breaker box. Requires air brakes or air system and auxiliary air tank. Tower to be located [#LOC]. | 25916 |
| 5460-0003 | Night Scan Powerlite NS4.5-4500M light tower with six 750 watt 115 volt MagnaFire quartz light heads. Control to be located next to the breaker box. Requires air brakes or air system and auxiliary air tank. Tower to be located [#LOC]. | 27915 |
| 5460-0004 | Night Scan Powerlite NS4.5-6000A light tower with four 1500 watt 220 volt quartz light heads. Control to be located next to the breaker box. Requires air brakes or air system and auxiliary air tank. Tower to be located [#LOC]. | 24444 |
| 5460-0005 | Night Scan Powerlite NS4.5-6000OPT light tower with four 1500 watt 230 volt Optimum quartz light heads. Control to be located next to the breaker box. Requires air brakes or air system and auxiliary air tank. Tower to be located [#LOC]. | 24114 |
| 5460-0006 | Night Scan Powerlite NS4.5-9000OPT light tower with six 1500 watt 230 volt Optimum quartz light heads. Control to be located next to the breaker box. Requires air brakes or air system and auxiliary air tank. Tower to be located [#LOC]. | 30184 |
| 5460-0011 | Night Scan Chief NS1.8-3000A light tower with two 1500 watt 230 volt quartz light heads. Control to be located next to the breaker box. Tower to be located [#LOC]. | 14862 |
| 5460-0013 | Command Light light tower model CL 605. Includes (6) 500 watt quartz halogen lights and a green strobe. Location: [#LOC]. | 23593 |
| 5460-0019 | Command Light light tower model CL 611. Includes (6) 1000 watt quartz halogen lights and a green strobe. Location: [#LOC]. | 22780 |
| 5460-0020 | Night Scan Powerlite NS3.0-4500 Profiler light tower with three (3) 1500 watt 230 volt Optimum Fire Research quartz light heads. Control to be located next to the breaker box. Requires air brakes or air system and an auxiliary air tank. Location: [#LOC]. | 23469 |
| 5460-0021 | Command Light light tower model CL 615. Includes (6) 1500 watt quartz halogen lights and a green strobe. Location: [#LOC]. | 22780 |
| 5460-0022 | Command Light Knight tower model KL450. Includes (6) 500 watt quartz halogen lights and a green strobe. Location: [#LOC]. | 15539 |
| 5460-0024 | Command Light light tower model SL429-RT. Includes (2) 1500 watt quartz halogen lights. Control to be located next to the breaker box. Location: [#LOC]. | 10021 |
| 5460-0025 | Night Scan Powerlite NS4.5-5400M light tower with six 900 watt 230 volt MagnaFire quartz light heads. Control to be located next to the breaker box. Requires air brakes or air system and auxiliary air tank. Tower to be located [#LOC]. | 26209 |
| 5460-0026 | Night Scan Chief NS1.8-3000A light tower with two 1500 watt 230 volt quartz light heads. Control to be located next to the breaker box. Tower to be located [#LOC]. | 14862 |
| 5460-0027 | Command Light tower option back lighting. | 2331 |
| 5460-0030 | Command Light light tower model KL475HS. Includes (6) 750 watt Magnafire quartz halogen lights and a green strobe. Location: [#LOC]. | 19181 |
| 5460-0031 | Night Scan Chief NS1.8-3000M light tower with four 750 watt 115 volt MagnaFire quartz light heads. Control to be located next to the breaker box. Tower to be located [#LOC]. | 16332 |
| 5460-0032 | Command Light light tower model KL475HS. Includes (6) 750 watt Magnafire quartz halogen lights and a red strobe. Location: [#LOC]. | 19181 |
| 5460-0033 | Night Scan Powerlite NS4.5-3600M light tower with four 900 watt 230 volt MagnaFire quartz light heads. Control to be located next to the breaker box. Requires air brakes or air system and auxiliary air tank. Tower to be located [#LOC]. | 23145 |
| 5460-0034 | Command Light light tower model CL 615. Includes (4) 1500 watt quartz halogen lights (2) 1000 watt Metal Halide light heads and a green strobe. Locate [#LOC]. | 24094 |
| 5460-0036 | Night Scan Chief NS2.3-3000M light tower with four 750 watt 115 volt MagnaFire quartz light heads. Control to be located next to the breaker box. Tower to be located [#LOC]. | 15355 |
| 5460-0038 | Command Light light tower model CL 615. Includes (6) 1000 watt quartz halogen lights and a green strobe. Location: [#LOC]. | 22780 |

| Item No. | Description | |
|---|---|---|
| 5460-0040 | Night Scan Powerlite NS4.5-6000OPT light tower with four 1500 watt 230 volt Optimum quartz light heads. Light heads and base covers painted job color. Control to be located next to the breaker box. Requires air brakes or air system and auxiliary air tank. Tower to be located [#LOC]. | 27694 |
| 5460-0041 | E-One supplied Van-Mor installed Will-Burt 7-30 Vertical Mast for Camera. Includes mast nonrotatable base plate support brkt pneumatic kit air filter and nycoil. Locate rear of truck on [#LOC]. Controlls will be located in the interior of the truck above desk area. | 10165 |
| 5460-0043 | Night Scan Powerlite NS3.0-6000OPT light tower with four 1500 watt 230 volt Optimum quartz light heads. Control to be located next to the breaker box. Requires air brakes or air system and auxiliary air tank. Tower to be located [#LOC]. | 27473 |
| 5460-0045 | Night Scan Powerlite NS4.5-3000M light tower with four 750 watt 115 volt MagnaFire quartz light heads. Control to be located next to the breaker box. Requires air brakes or air system and auxiliary air tank. Tower to be located [#LOC]. | 25475 |
| 5460-0046 | Command Light light tower model KL450. Includes black powder coat finish with (6) 500 watt quartz halogen lights and a green strobe. Location: [#LOC]. | 16992 |
| 5460-0047 | Night Scan Chief NS2.3-6000OPT light tower with four 1500 watt 230 volt FRC Optimum quartz light heads. Control to be located next to the breaker box. Tower to be located [#LOC]. | 15368 |
| 5460-0048 | Command Light light tower model CL 615 with FRC Optimum lightheads. Includes (6) 1500 watt quartz halogen lights and an amber strobe. Location: [#LOC]. | 28341 |
| 5460-0050 | Night Scan Powerlite NS 3.0-3600M light tower with four 900 watt 230 volt MagnaFire quartz light heads. Control to be located next to the breaker box. Requires air brakes or air system and auxiliary air tank. Tower to be located [#LOC]. | 22566 |
| 5460-0053 | Command Light light tower model CL602A with Whelen PFP2AC lightheads. Includes (6) 150 watt LED lights and an amber strobe. Location: [#LOC]. | 37538 |
| 5460-0054 | Command Light light tower model KL 450 with Whelen PFP2AC lightheads. Includes (6) 150 watt LED lights and a amber strobe. Location: [#LOC]. | 32787 |
| 5460-0055 | Wireless remote control for Command Light tower. Includes splitter box for use with standard controller. Wireless located at the command desk. | 5240 |
| 5460-0056 | Wireless remote control for Wil-Burt Night Scan light tower. For use with standard controller. Wireless located next to wired controller. | 4039 |
| 5460-0060 | Night Scan Powerlite NS3.0-4000OPT light tower with four 1000 watt 230 volt Optimum quartz light heads and D-TECH II safety system. Control to be located next to the breaker box. Requires air brakes or air system and auxiliary air tank. Tower to be located [#LOC]. | 32349 |
| 5460-0064 | Night Scan Chief NS1.8-6000OPT light tower with four 1500 watt 230 volt FRC Optimum quartz light heads. Control to be located next to the breaker box. Requires air brakes or air system and auxiliary air tank. Tower to be located [#LOC]. | 15966 |
| 5460-0065 | Night Scan Chief 1.8-3600M light tower with four 900 watt 230 volt quartz light heads. Control to be located next to the breaker box. Tower to be located [#LOC]. | 17877 |
| 5460-0066 | Command Light light tower model CL602D with Whelen PFP2 12V lightheads. Includes (4) 150 watt LED lights and a amber strobe. Location: [#LOC]. | 31125 |
| 5460-0067 | Night Scan Chief NS2.3-600LED Whelen light tower with (4) 150 watt 12V Whelen Pioneer PFP2 LED light heads. Control to be located next to the breaker box if equipped or the forward wall of L1 if unit has no breaker box. Tower to be located [#LOC]. | 19637 |
| 5460-0069 | Command Light Knight tower model KL450. Includes (6) 500 watt quartz halogen lights and a amber strobe. Location: [#LOC]. | 15539 |
| 5460-0070 | Night Scan Chief NS1.8-3000-4-MGN-110v light tower with four 750 watt 115 volt MagnaFire quartz light heads. Control to be located next to the breaker box. Tower to be located [#LOC]. | 12655 |
| 5460-0071 | Night Scan Powerlite NS3.0-600WHL light tower with (4) 150 watt 120 volt Whelen Pioneer PFP2AC LED light heads. Control to be located next to the breaker box. Requires air brakes or air system and auxiliary air tank. Ahead of vista location requires riser. Tower to be located [#LOC]. | 34510 |
| 5460-0072 | Night Scan Powerlite NS3.0-900WHL light tower with (6) 150 watt 120 volt Whelen Pioneer PFP2AC LED light heads. Control to be located next to the breaker box. Requires air brakes or air system and auxiliary air tank. Ahead of vista location requires riser. Tower to be located [#LOC]. | 40821 |
| 5460-0073 | Night Scan Chief NS1.8-600WHL 120V Whelen light tower with (4) 150 watt 120 volt Whelen Pioneer PFP2AC LED light heads. Control to be located next to the breaker box. Tower to be located [#LOC]. | 28949 |
| 5460-0074 | Night Scan Chief NS1.8-600 Whelen light tower with (4) 150 watt 12V Whelen Pioneer PFP2 LED light heads. Control to be located next to the breaker box (L1 forward wall w/o breaker box). Tower to be located [#LOC]. | 19802 |
| 5460-0075 | Night Scan Powerlite NS4.5-900WHL light tower with (6) 150 watt 120 volt Whelen Pioneer PFP2AC LED light heads. Control to be located next to the breaker box. Requires air brakes or air system and auxiliary air tank. Tower to be located [#LOC]. | 41776 |

| Item No. | Description | |
|---|---|---|
| 5460-0076 | Will-Burt Night Scan Powerlite NS4.5-600WHL light tower with (4) 150 watt 120 volt Whelen Pioneer PFP2AC LED light heads. Control to be located next to the breaker box. Requires air brakes or air system and auxiliary air tank. Tower to be located [#LOC]. | 35367 |
| 5460-0077 | Night Scan Chief NS2.3-600LED Whelen light tower with (4) 150 watt 110V Whelen Pioneer PFP2AC LED light heads. Control to be located next to the breaker box. Tower to be located [#LOC]. | 29236 |
| 5460-0080 | Night Scan Chief NS2.3-920SPA 12V FRC light tower with (4) 230 watt 12 volt FRC Spectra LED light heads. Control to be located next to the breaker box. Tower to be located [#LOC]. | 26346 |
| 5460-0081 | Night Scan Chief NS2.3-920SPA 120V FRC light tower with (4) 230 watt 120 volt FRC Spectra LED light heads. Control to be located next to the breaker box. Tower to be located [#LOC]. | 26346 |
| 5460-0082 | Night Scan Powerlite NS3.0-920SPA light tower with (4) 230 watt 120 volt FRC Spectra LED light heads. Control to be located next to the breaker box. Requires air brakes or air system and auxiliary air tank. Ahead of vista location requires riser. Tower to be located [#LOC]. | 40981 |
| 5460-0083 | Night Scan Powerlite NS3.0-1380SPA light tower with (6) 230 watt 120 volt FRC Spectra LED light heads. Control to be located next to the breaker box. Requires air brakes or air system and auxiliary air tank. Ahead of vista location requires riser. Tower to be located [#LOC]. | 47080 |
| 5460-0085 | Night Scan Powerlite NS4.5-1380SPA light tower with (6) 230 watt 120 volt FRC Spectra LED light heads. Control to be located next to the breaker box. Requires air brakes or air system and auxiliary air tank. Tower to be located [#LOC]. | 47399 |
| 5460-0086 | Command Light light tower model CL 607. Includes (6) 750 watt ROM Magnafire quartz halogen lights and a green strobe. Location: [#LOC]. | 28521 |
| 5460-0087 | Command Light light tower model CL 607. Includes (6) 750 watt FRC Optimum quartz halogen lights and a green strobe. Location: [#LOC]. | 28521 |
| 5460-0089 | Command Light light tower model CL602A with FRC 120V Spectra lightheads. Includes (4) 220 watt LED lights. Location: [#LOC]. | 36245 |
| 5460-0090 | Command Light light tower model CL602A with FRC 120V Spectra lightheads. Includes (6) 220 watt LED lights. Location: [#LOC]. | 37538 |
| 5460-0091 | Command Light light tower model CL602D with FRC Spectra 12V lightheads. Includes (4) 220 watt LED lights. Location: [#LOC]. | 31125 |
| 5460-0092 | Command Light light tower model KL475OPT. Includes (6) 750 watt FRC Optimum quartz halogen lights. Location: [#LOC]. | 18811 |
| 5460-0093 | Command Light light tower model KL415A. Includes (6) 220 watt 120V FRC Spectra LED lights. Control to be located adjacent to breaker box. Location: [#LOC]. | 34892 |
| 5460-0094 | Command Light light tower model KL415A. Includes (6) 150 watt 120V Whelen Pioneer PFP2 LED lights. Control to be located adjacent to breaker box. Location: [#LOC]. | 34892 |
| 5460-0095 | Command Light light tower model KL415A. Includes (4) 220 watt 120V FRC Spectra LED lights. Control to be located adjacent to breaker box. Location: [#LOC]. | 28522 |
| 5460-0096 | Command Light light tower model KL415A. Includes (4) 150 watt 120V Whelen Pioneer PFP2 LED lights. Control to be located adjacent to breaker box. Location: [#LOC]. | 28522 |
| 5460-0097 | Command Light light tower model KL415D. Includes (4) 220 watt 12V FRC Spectra LED lights. Control to be located adjacent to breaker box. Location: [#LOC]. | 26930 |
| 5460-0098 | Command Light light tower model KL415D. Includes (4) 150 watt 12V Whelen Pioneer PFP2 LED lights. Control to be located adjacent to breaker box if equipped or L1 forward wall in available space if not otherwise specified. Location: [#LOC]. | 26930 |
| 5460-0100 | Command Light light tower model SL422D. Includes (2) 150 watt Whelen 12V Pioneer lights. Control to be located next to the breaker box. Location: [#LOC]. | 13872 |
| 5460-0101 | Command Light light tower model CL602A-2MH. Includes (4) 110V 220 watt FRC Spectra LED lights and (2) 230V 1000W metal halide lights. Location: [#LOC]. | 39430 |
| 5460-0102 | Night Scan Chief NS1.8-3000OPT light tower with four 750 watt FRC Optimum quartz light heads. Control to be located next to the breaker box. Tower to be located on [#LOC]. | 15705 |
| 5460-0103 | Night Scan Powerlite NS3.0-900WHL light tower with (6) 150 watt 120 volt Whelen Pioneer PFP2AC LED light heads. Control to be located next to the breaker box. Requires air brakes or air system and auxiliary air tank. Tower to be located rearward on flat roof (non vista) and mounted side to side and hinged to driver. Placement to allow 45 degree shield to be placed in normal vista rise locations to allow cab to appear to have vista roof. | 40821 |
| 5460-0107 | Night Scan Powerlite NS2.3-225WHL Profiler light tower with three (3) 75 watt 12 volt Whelen Pioneer PFP1 light heads. Control to be located next to the breaker box (if equipped). Location: [#LOC]. | 23740 |
| 5460-0110 | Night Scan Powerlite NS3.0-5400M light tower with six 900 watt 230 volt MagnaFire quartz light heads. Control to be located next to the breaker box. Requires air brakes or air system and auxiliary air tank. [#LOC]. | 25682 |
| 5460-0111 | Command Light light tower model CL 609. Includes (6) 900 watt ROM Magnafire quartz halogen lights and a green strobe. Location: [#LOC]. | 28800 |

| Item No. | Description | |
|---|---|---|
| 5460-0112 | Night Scan NS3.0-2250M Profiler light tower with three (3) 750 watt 115 volt MagnaFire quartz light heads. Control to be located next to the breaker box. Requires air brakes or air system and an auxiliary air tank. Location: [#LOC]. | 23469 |
| 5460-0113 | Command Light light tower model KL475. Includes (6) 750 watt Magnafire quartz halogen lights. Location: [#LOC]. | 18811 |
| 5460-0114 | Night Scan Chief NS1.8-300LED Whelen light tower with (2) 150 watt 12 volt Whelen Pioneer PFP2 LED light heads. Control to be located adjacent to breaker box. Tower to be located [#LOC]. | 15651 |
| 5460-0115 | Command Light light tower model SL447-RT with 80" arm. Includes (4) 750 watt 230V ROM MAgnifier quartz halogen lights. Control to be located next to the breaker box. Location: [#LOC]. | 13850 |
| 5460-0116 | Night Scan Powerlite NS4.5-2100SPA light tower with (6) 350 watt 120 volt FRC Spectra LED light heads. Control to be located next to the breaker box. Requires air brakes or air system and auxiliary air tank. Tower to be located [#LOC]. | 48700 |
| 5460-0117 | Will-Burt Night Scan Vertical 5.4-17-600 light tower with (4) Whelen 150W PFP2 120V light heads. Control to be located next to the breaker box. Requires air brakes or air system and auxiliary air tank. Tower to be located [#LOC]. | 35806 |
| 5460-0118 | Command Light light tower model SL447-FO. Includes (4) 750 watt 120V FRC Optimum quartz halogen lights. Control to be located next to the breaker box. Location: [#LOC]. | 11910 |
| 5460-0119 | Command Light light tower model SL447-RT with 80" arm. Includes (4) 750 watt 110V ROM Magnifier quartz halogen lights. Control to be located next to the breaker box. Location: [#LOC]. | 12704 |
| 5460-0120 | Command Light light tower model CL602D with FRC Spectra 12V lightheads. Includes (4) 220 watt LED lights. Tower and lightheads powder coated black. Location: [#LOC]. | 34095 |
| 5460-0121 | Night Scan Chief NS2.3-500-4 LED light tower with (4) 125 watt 12V Will-burt XL 160 LED light heads. Control to be located next to the breaker box if equipped or the forward wall of L1 if unit has no breaker box. Tower to be located [#LOC]. | 19178 |
| 5460-0122 | Command Light light tower model CL615-4HM. Includes (2) 1500 watt quartz halogen lights and (4) 1000 watt Metal Halide light heads. Locate [#LOC]. | 30621 |
| 5460-0123 | Night Scan Chief NS2.3-460SPC light tower with (2) 230 watt 120 volt FRC Spectra LED light heads and a Sidewider standard defenition analog camera system. Tower control to be located next to the breaker box. Camera system controls located on interior desk area. Tower to be located [#LOC]. | 35290 |
| 5460-0124 | Command Light light tower model SL442D-FS. Includes (4) 230 watt FRC 12V Spectra lights. Control to be located next to the breaker box or L1 if not equipped. Location: [#LOC]. | 21221 |
| 5460-0125 | Command Light tower powder coat color in place of standard. Color: [#COL]. | 1467 |
| 5460-0126 | Command Light light tower model KL415A-FX. Includes (6) 335 watt 120V FRC Spectra Max LED lights. Control to be located adjacent to breaker box. Location: [#LOC]. | 36293 |
| 5460-0128 | Will-Burt light tower black in place of standard. Includes covers mast and lights. | 2162 |
| 5460-0129 | Command Light light tower model KL415D-HF. Includes (4) FireTech LED lights. Control to be located adjacent to breaker box or L1 forward wall if not equipped with breaker box. Location: [#LOC]. | 27589 |
| 5460-0130 | Command Light light tower model SL442A-FS. Includes (4) 230 watt FRC 120V Spectra lights. Control to be located next to the breaker box. Location: [#LOC]. | 21221 |
| 5470-0000 | Receptacle twist lock 15A/110V 3 wire NEMA L5-15 with cover plate. Location: [#LOC]. | 352 |
| 5470-0001 | Receptacle twist lock 20A/110V 3 wire NEMA L5-20 with cover plate. Location: [#LOC]. | 368 |
| 5470-0002 | Receptacle twist lock 30A/110V 3 wire NEMA L5-30 with cover plate. Location: [#LOC]. | 395 |
| 5470-0003 | Receptacle household 15A/110V duplex 3-prong NEMA 5-15 with cover plate. Location: [#LOC]. | 321 |
| 5470-0004 | Receptacle household 20A/110V duplex 3-prong NEMA 5-20 with cover plate interior mounted wired to inlet receptacle. Location: [#LOC]. | 347 |
| 5470-0005 | Receptacle household 15A/110V Daniel Woodhead duplex 3 wire NEMA 5-15 w/Daniel Woodhead cover plate. Location: [#LOC] | 639 |
| 5470-0006 | Receptacle twist lock 15A/110V Daniel Woodhead 3 wire NEMA L5-15 w/Daniel Woodhead cover plate. Location: [#LOC] | 575 |
| 5470-0007 | Receptacle twist lock 15A/220V Daniel Woodhead 3 wire NEMA L6-15 w/Daniel Woodhead cover plate. Location: [#LOC] | 725 |
| 5470-0008 | Receptacle twist lock 20A/110V Daniel Woodhead 3 wire NEMA L5-20 w/Daniel Woodhead cover plate. Location: [#LOC]. | 591 |
| 5470-0009 | Receptacle twist lock 20A/220V Daniel Woodhead 3 wire NEMA L6-20 w/Daniel Woodhead cover plate. Location: [#LOC] | 782 |
| 5470-0010 | Receptacle twist lock 20A 110V/220V Daniel Woodhead 4 wire NEMA L14-20 w/Daniel Woodhead cover plate. Location: [#LOC] | 811 |
| 5470-0011 | Receptacle twist lock 15A/220V 3 wire NEMA L6-15 with cover plate. Location: [#LOC] | 512 |
| 5470-0012 | Receptacle twist lock 20A/220V 3 wire NEMA L6-20 with cover plate. Location: [#LOC]. | 512 |
| 5470-0013 | Receptacle twist lock 20A 110V/220V 4 wire NEMA L14-20 with cover plate. Location: [#LOC]. | 696 |
| 5470-0014 | Receptacle twist lock 30A/220V 3 wire NEMA L6-30 with cover plate. Location: [#LOC]. | 696 |
| 5470-0015 | Receptacle twist lock 30A 110V/220V 4 wire NEMA L14-30 with cover plate. Location: [#LOC] | 690 |

| Item No. | Description | |
|---|---|---|
| 5470-0016 | Receptacle shoreline 30A/110V with auto transfer switch. The receptacle shall be located [#LOC]. | 1179 |
| 5470-0017 | Receptacle household 20A/110V duplex 3-prong NEMA 5-20 with cover plate. Location: [#LOC]. | 335 |
| 5470-0018 | Receptacle shoreline 50A/220V with auto transfer switch. The receptacle shall be located [#LOC]. | 1189 |
| 5470-0019 | Receptacle FirePower 20A/110V model FP-11 with cover plate. Location: [#LOC]. | 406 |
| 5470-0020 | Receptacle 12V military with A pin Positive B pin Negative C pin Blank. Location: [#LOC] | 278 |
| 5470-0021 | 12 volt power point wired battery hot. Location [#LOC] | 68 |
| 5470-0024 | Receptacle 15A/110V duplex with (1) 3-prong NEMA 5-15 and (1) twist lock NEMA L5-15 with cover plate. Location: [#LOC]. | 375 |
| 5470-0025 | Receptacle household 30A/110V 3-prong NEMA 5-30 with cover plate. Location: [#LOC] | 383 |
| 5470-0026 | Receptacle household 15A/110V duplex 3-prong NEMA 5-15 with cover plate interior mounted wired to inlet receptacle. Location: [#LOC]. | 321 |
| 5470-0027 | Household switch with weaterproof cover located near receptacle at [#LOC]. Switch to operate single leg of this duplex receptacle. | 578 |
| 5470-0028 | Receptacle household 20A/110V Daniel Woodhead duplex 3 wire NEMA 5-20 w/Daniel Woodhead cover plate. Location: [#LOC]. | 657 |
| 5470-0029 | Receptacle Hubbell twist lock 20A 110V/250V 3 wire NON-NEMA with cover plate. Location: [#LOC]. | 437 |
| 5470-0030 | Receptacle twist lock 15A/110V 3 wire NEMA L5-15 with yellow Daniel Woodhead cover plate. Location: [#LOC]. | 429 |
| 5470-0031 | Receptacle twist lock 15A/110V duplex 3 wire NEMA L5-15 with yellow Daniel Woodhead cover plate. Location: [#LOC]. Top duplex will be hooked to toogle switch next to it. | 725 |
| 5470-0032 | Receptacle 12V Marinco model 2018BR with model 2018MB cover wired battery hot. Includes model 2018BP male connector. Location: [#LOC]. | 485 |
| 5470-0034 | Receptacle shoreline 50A/220V. The receptacle shall be located [#LOC]. No additional breaker box is included in this code. | 319 |
| 5470-0035 | Receptacle shoreline 50A/220V with auto transfer switch. The receptacle shall be located outside driver's door next to handrail. Transfer switch will be hooked up to all receptacles that power the Trip Lite power strips interior receptacles A/C and the refridgerator. Items that should be included in this are the electronics rack and the smart board | 1189 |
| 5470-0036 | 9 outlet Stanley model 31610 household 15A/110V power strip wired to inlet receptacle. Location: [#LOC]. | 209 |
| 5470-0037 | 6 outlet household 15A/110V power strip wired to inlet receptacle. Location: in upper cabinets above the desk. | 241 |
| 5470-0039 | Receptacle NON-NEMA locking 20A 120V/250V Daniel Woodhead model 67W08 w/Daniel Woodhead cover plate. Location: [#LOC]. | 811 |
| 5470-0040 | Receptacle twist lock 50A/220V 3 wire NEMA L6-50 with cover plate. Location: [#LOC]. | 847 |
| 5470-0042 | Auto-Eject receptacle inlet 30 amp 120 volt with auto transfer switch. The receptacle shall be located [#LOC] and with a [#COL] cover. | 1714 |
| 5470-0048 | Service 30A/220V 4 wire with junction box. Location: [#LOC]. | 538 |
| 5470-0053 | Receptacle inlet 110 VAC L5-30 Amp twist lock with a [#COL] cover. Location: [#LOC]. | 322 |
| 5470-0054 | Receptacle household 15A/110V duplex 3-prong NEMA 5-15 with cover plate interior mounted wired to generator (not wired to inlet/shoreline). Location: [#LOC]. | 321 |
| 5470-0055 | Receptacle household 15A/110V duplex 3-prong NEMA 5-15 with cover plate. This receptacle shall be GFCI protected and have a push button reset on the receptacle. Location: [#LOC]. | 349 |
| 5470-0057 | Receptacle household 20A/110V duplex 3-prong NEMA 5-20 with cover plate interior mounted wired to generator (not wired to inlet/shoreline). Location: [#LOC]. | 335 |
| 5470-0060 | Receptacles household 15A/110V duplex 3-prong NEMA 5-15 and 20A/110V twist lock receptacle NEMA L5-20 with cover plates. The receptacles shall be GFCI protected. The 5-15 receptacle shall have a push button reset on the receptacle the L5-20 shall be GFCI protected at the breaker. Location: (1) set of (2) 5-15 and (1) L5-20 GFCI receptacles each side in cab wheel well area. | 897 |
| 5470-0061 | Grainger model 2MV42; 6 outlet household 15A/110V power strip wired to inlet receptacle. Location: [#LOC]. | 377 |
| 5470-0064 | Receptacle twist lock 15A/110V 3 wire NEMA L5-15 with cover plate. interior mounted wired to inlet receptacle. Location: Inside walk in body compartment DS2 low on back wall as far forward as possible. REF customer drawing. | 352 |
| 5470-0065 | Receptacle twist lock 15A/110V 3 wire NEMA L5-15 with cover plate. interior mounted wired to inlet receptacle. Location: Inside walk in body compartment OS2 low on back wall as far forward as possible. REF customer drawing. | 352 |
| 5470-0066 | 12 volt power point wired battery hot. Location: in rear walkin body on forward wall above desk driver side. | 68 |
| 5470-0067 | 12 volt power point wired battery hot. Location: Inside walkin body compartment DS2 low on back wall as far forward as posable. REF customer drawing | 68 |
| 5470-0068 | 12 volt power point wired battery hot. Location: Inside walkin body compartment OS2 low on back wall as far forward as posable. REF customer drawing | 68 |

| Item No. | Description | |
|---|---|---|
| 5470-0069 | Receptacle household 15A/110V duplex 3-prong NEMA 5-15 with cover plate. Location: In rear walkin body on forward wall above desk driver side. | 321 |
| 5470-0070 | Receptacle household 15A/110V duplex 3-prong NEMA 5-15 with cover plate. Location: Inside walkin body driver side 6 inches above counter top and centered in space forward of DS2. For dealer installed refrigerator. Ref customer drawing. | 321 |
| 5470-0071 | Receptacle household 15A/110V duplex 3-prong NEMA 5-15 with cover plate interior mounted wired to inlet receptacle and shall include as part of the receptacle 15 amp over current protection. This receptacle shall be GFCI protected and have a push button reset on the receptacle. Location: [#LOC]. | 379 |
| 5470-0072 | Each receptacle shall be labeled to identify the power source (Shoreline Generator). | 139 |
| 5470-0075 | Receptacle household 30A/220V 3 wire NEMA 6-30 with cover plate. Location: [#LOC]. | 696 |
| 5470-0076 | Receptacle Hubbell twist lock 15A/110V 3 wire NEMA L5-15 with cover plate. Location: [#LOC]. | 437 |
| 5470-0077 | Receptacle Hubbell twist lock 20A/250V 4 wire NEMA L15-20 with cover plate. Location: [#LOC]. | 437 |
| 5470-0079 | Receptacle shoreline 100A/220V with manual transfer switch for Breathing Air Compressor. The receptacle shall be located in R1 low on forward wall. | 3392 |
| 5470-0080 | Receptacle; Schuko 250V model 70310 with weatherproof cap. Location: [#LOC]. | 512 |
| 5470-0081 | Receptacle household 20A/110V duplex 3-prong NEMA 5-20 with cover plate exterior mounted wired to inlet receptacle. Location: [#LOC]. | 347 |
| 5470-0082 | Receptacle 20A/220V 3 wire NEMA 6-20 with cover plate wired to inlet receptacle. Location: [#LOC]. | 512 |
| 5470-0083 | Receptacle inlet 100A 208V 3 phase. Wired to a 3 pole 100A manual transfer switch. Locate: R1 forward wall. | 4614 |
| 5470-0084 | Receptacle household 20A/110V double gang (four outlets) 3-prong NEMA 5-20 with cover plate interior mounted wired to inlet receptacle. Location: [#LOC]. | 675 |
| 5500-0002 | Code3 V-con #3672 siren on cab dash. | 737 |
| 5500-0003 | Code3 V-con #3692 siren on cab dash. | 737 |
| 5500-0004 | Code3 V-Con #3692 siren recessed mounted. | 849 |
| 5500-0005 | Federal Signal electronic EQ2B-EF siren. Includes 200 watt speaker with square "E-ONE" grille. Speaker location: [#LOC]. | 4275 |
| 5500-0006 | Federal electronic e-Q2B siren. Includes "Q" grille. Speaker location: [#LOC]. | 4846 |
| 5500-0008 | Federal PA300 siren located in cab as space permits. | 669 |
| 5500-0009 | Federal PA300 electronic siren recessed mounted. | 797 |
| 5500-0010 | Federal Q2B siren - flush mounted in bumper. Location: [#LOC]. | 3406 |
| 5500-0011 | Federal Q2B siren - Pedestal mounted on bumper. Location: [#LOC]. | 3069 |
| 5500-0012 | Prewire for Federal Q2B mechanincal siren. Driver side front bumper. | 318 |
| 5500-0014 | Unitrol #480K siren. | 1816 |
| 5500-0015 | Whelen model 295SLSA1 siren with microphone (replaced 295HFSA1). | 1058 |
| 5500-0016 | Code 3 V-Con #3672 siren recessed mounted. | 849 |
| 5500-0017 | Whelen model 295HFSM1 siren with mechanical siren tone and microphone. N/A in California. | 1162 |
| 5500-0019 | Code 3 #3997 siren. Requires (1) 200 watt or (2) 100 watt speakers. | 1950 |
| 5500-0020 | Federal PA4000 siren recessed mounted. Includes horn ring select switch (Tap II / DOT / electronic air horn sound) on face of siren. Note: Switch will be non-functional when E-ONE installed horn ring select switch is supplied. | 851 |
| 5500-0027 | Signal Vehicle Products model SS741MG siren recessed mounted. | 671 |
| 5500-0030 | Code 3 #3997R siren. Requires (1) 200 watt or (2) 100 watt speakers. | 1950 |
| 5500-0031 | Whelen model 295HFSA7 siren with microphone. | 1654 |
| 5500-0032 | Federal / Unitrol #U480K-4 siren. | 1752 |
| 5500-0034 | Federal Rumbler secondary siren. Includes amp timer and two speakers mounted under vehicle. Requires control switch. | 1395 |
| 5500-0036 | Whelen model 295HFSC9 siren with microphone. N/A in California. | 1328 |
| 5500-0037 | Federal PA300 siren recessed mounted. Microphone to be removed and a plug is to be installed in the wiring hole. | 797 |
| 5500-0038 | Federal / Unitrol #UTM4 siren. | 1771 |
| 5500-0040 | Powercall DX5200 siren control. For use with (1) 200 watt speaker or up to (2) 100W speakers. | 1063 |
| 5500-0041 | Federal electronic Q2B-EF siren. Includes two (2) ES100 speakers with square "E-ONE" grilles. Speaker location: [#LOC]. | 4423 |
| 5500-0044 | Whelen model 295HFSA7 siren with microphone. Microphone to be removed (shipped loose) and a plug is to be installed in the wiring hole. | 1654 |
| 5500-0045 | Whelen model 295SLSC1 siren with plug-in microphone. N/A in California. | 1058 |
| 5500-0048 | Federal PA300 100W siren recessed mounted. | 747 |
| 5500-0049 | Whelen Howler secondary siren. Includes amp timer and two speakers mounted under vehicle. | 1411 |
| 5500-0051 | Federal PA300R siren with single control. PA control and volume switch located on electrical access panel. | 958 |
| 5500-0052 | Federal PA640 electronic siren recessed mounted. | 797 |

| Item No. | Description | |
|---|---|---|
| 5500-0054 | Federal / Unitrol #UTM1 siren. | 1280 |
| 5500-0059 | Whelen model 295SL100 siren with microphone (replaced 295HF100). | 999 |
| 5500-0060 | Whelen Howler secondary siren. Includes amp timer and two speakers mounted under gravelshield. | 1411 |
| 5500-0063 | Federal electronic Q2B-EF siren. Includes two ES100 speakers. Speaker location: [#LOC]. | 4423 |
| 5500-0064 | Federal Rumbler secondary siren. Includes amp timer and two speakers mounted under vehicle with heavy duty E-One fabricated brackets. Requires control switch. | 1633 |
| 5500-0066 | Whelen model 295SLSA1 siren without microphone. | 1058 |
| 5500-0067 | Whelen model 295SLSC1 siren without microphone. N/A in California. | 1058 |
| 5500-0068 | Pre-wire for Tomar Emitter. Coil 4' of wire in driver's overhead panel. | 318 |
| 5500-0069 | Prewire for Federal Q2B mechanincal siren. Officer side front bumper. | 318 |
| 5500-0070 | Federal Signal electronic EQ2B-EF siren. Includes 200 watt speaker with "EF" grille. Speaker location: [#LOC]. | 4275 |
| 5500-0071 | Federal Q2B siren - flush mounted in bumper. Includes diamond plate housing for siren to forward face. Freightliner cabs w/OEM bumper only. Location: driver side front bumper. | 3615 |
| 5500-0072 | Powercall X71 siren control. For use with (1) 100W speaker. Locate switch on officer side switch panel. | 673 |
| 5500-0074 | Whelen model 295HFS2 siren with flush mount siren head remote amplifier and microphone. N/A in California. | 1217 |
| 5500-0075 | Carson SA-400M siren recessed mounted. | 1312 |
| 5500-0076 | Federal Q2B siren - flush mounted in bumper. Incudes diamond plate housing for siren to space outward to clear in bumper options. Location: center front bumper. | 3615 |
| 5500-0077 | Federal Q2B siren - flush mounted in bumper. For use with commercial chassis w/OEM chrome bumper only. Location: driver side front bumper.This option voids bumper warranty. | 3746 |
| 5500-0078 | Federal Q2B siren - flush mounted in bumper. For use with commercial chassis w/OEM chrome bumper only. Location: Officer side front bumper.This option voids bumper warranty. | 3746 |
| 5500-0080 | Federal Q2B siren - Recess mounted in bumper. Front of grille behind circular bumper cut-out. Requires 12" heavy duty bumper. Location: [#LOC]. | 4020 |
| 5500-0081 | Powercall 6 Adam siren. For use with (1) 200 watt speaker or (2) 100W speakers. | 1038 |
| 5500-0083 | Carson SA-441M remote siren. | 1598 |
| 5500-0084 | Whelen Alpha12S siren located [#LOC] with a Federal Signal ES100 speaker located on the driver side rear of body. | 1462 |
| 5500-0085 | Screaming Eagle nesting eagle mount siren in bumper. Location: [#LOC]. | 3877 |
| 5500-0086 | Federal Q2B siren - flush mounted in bumper. Incudes diamond plate housing for siren to forward face. Freightliner cabs w/OEM bumper only. Location: officer side front bumper. | 3615 |
| 5500-0087 | Federal Q2B siren - flush mounted in bumper. Includes brushed stainless steel housing for siren to forward face. Freightliner cabs w/OEM bumper only. Location: driver side front bumper. | 3745 |
| 5500-0089 | Federal PA300R siren with single control. No PA control. | 958 |
| 5500-0090 | Whelen model 295SDA1 siren with flush mount siren head microphone and remote amplifier. Siren head to control directional bar (in place of seperate controller) when equipped. Requires (1) 200 watt speaker or (2) 100 watt speakers. | 1455 |
| 5510-0002 | Speaker Federal BP200 mounted through bumper. Location: [#LOC]. | 1333 |
| 5510-0003 | Speaker Federal CP100S pedestal mounted. Location: [#LOC]. | 871 |
| 5510-0006 | Speaker Federal ES100-MSBMT. Location: [#LOC]. | 518 |
| 5510-0007 | Speaker Cast Products SA2401 100W thru bumper. Location: [#LOC]. | 582 |
| 5510-0008 | Speaker Cast Products SA3501 100W through bumper. Location: [#LOC]. | 644 |
| 5510-0012 | Speaker Federal TS100 through bumper with E-ONE grille. Location: [#LOC]. | 618 |
| 5510-0013 | Speaker Federal Dynamax MS100-EF thru bumper. Location: [#LOC]. | 618 |
| 5510-0015 | Speaker Federal Dynamax MS100. Located Officer's side behind Tow hook. Navistar 4400 chassis only with '07 engine. | 618 |
| 5510-0017 | Speaker Cast Products SA2403 100W thru bumper. Location: [#LOC]. | 582 |
| 5510-0028 | Speaker Federal Dynamax ES100. Located officer's side behind tow hook. Navistar 4400 chassis only. | 618 |
| 5510-0029 | Speaker Federal Signal Dynamax ES100 with "E-ONE" grille through bumper. Location: [#LOC]. | 618 |
| 5510-0031 | Whelen SA314P electronic siren speaker recessed in front bumper with polished trim ring. Location: [#LOC]. | 862 |
| 5510-0034 | Whelen SA315P electronic siren speaker mounted behind front bumper cut-out. Location: [#LOC]. | 571 |
| 5510-0041 | Speaker Federal Signal Dynamax ES100. Location: [#LOC]. | 618 |
| 5510-0044 | Whelen SA315P electronic siren speaker located behind front bumper. Location: [#LOC]. | 571 |
| 5510-0045 | Speaker Federal Signal Dynamax ES100 with "E-ONE" grille. Location: [#LOC]. | 618 |
| 5510-0046 | Speaker Federal BP100 mounted through bumper. Location: [#LOC]. | 847 |
| 5510-0047 | Speakers (Pair) Federal Signal Dynamax ES100 through bumper with smooth plate grille painted same color as the heavy duty bumper and sufficient surface area for lettering. Locate both speakers next to each other center of the bumper with one common grill covering them. | 1464 |

| Item No. | Description | |
|---|---|---|
| 5510-0049 | Whelen SP123BMC electronic siren speaker recessed in front bumper. Location: [#LOC]. | 640 |
| 5510-0050 | Speaker PowerCall Feniex with "E-ONE" grille through bumper. Location: [#LOC]. | 437 |
| 5550-0006 | Whelen LED 6/2/2 lower level warning light package. Includes (6) 600 series (2) 400 series and (2) 500 series light heads w/weatherproof connectors. Locate side facing lights: [#LOC]. | 3665 |
| 5550-0007 | Whelen LED 8/2 lower level warning light package. Includes (8) 600 series and (2) 500 series light heads w/weatherproof connectors. Locate side facing lights: [#LOC]. | 3949 |
| 5550-0008 | Whelen strobe/LED 6/2/2 lower level warning light package. Includes (6) 600 series strobes (2) 400 series strobes and (2) 500 series LED light heads w/weatherproof connectors and required power supplies. Locate side facing lights: [#LOC]. | 3537 |
| 5550-0010 | Whelen 600 series LED lower level warning light package. Includes (10) LED light heads w/weatherproof connectors. Locate side facing lights: [#LOC]. | 4343 |
| 5550-0012 | Whelen 600 series strobe lower level warning light package. Includes (10) strobe lights w/weatherproof connectors and required power supplies. Locate side facing lights: [#LOC]. | 4086 |
| 5550-0013 | Federal Signal strobe/halogen lower level warning light package. Includes (8) strobe (2) GH1F halogen lts and required power supplies. Locate side facing lights: [#LOC]. | 3448 |
| 5550-0014 | Federal Signal GS5 strobe lower level warning light package. Includes (10) Lights and required power supplies. Locate side facing lights: [#LOC]. | 3936 |
| 5550-0021 | Federal Signal GL5 LED lower level warning light package. Includes Ten (10) GL5-R lights. Locate side facing lights: [#LOC]. | 3149 |
| 5550-0028 | Code3 strobe/halogen 6/4 lower level warning light package. Includes (6) 40 series strobe lights and (4) OL135 halogen lights and required power supplies. Locate side facing lights: [#LOC]. | 5327 |
| 5550-0029 | Code3 halogen 4/6 lower level warning light package. Includes Includes (6) 41 series and (4) OL135 halogen lights. Locate side facing lights: [#LOC]. | 2677 |
| 5550-0030 | Code3 model 65 red LED lower level warning light package. Includes (10) LED lights. Locate side facing lights: [#LOC]. | 4589 |
| 5550-0049 | Code3 LED 6/2/2 lower level warning light package. Includes (8) model 65 red LED and (2) LXEX1F-R LED lights. Includes chrome bezels where applicable. Locate side facing lights: [#LOC]. | 3631 |
| 5550-0052 | Flash rate for Federal LED lower level warning lights to be set at pattern 2 (102 TFPM). | 103 |
| 5550-0053 | Flash rate for Federal LED lower level warning lights to be set at pattern 8 (150 FPM). | 103 |
| 5550-0054 | Whelen 600 series Super LED lower level warning light package. Includes (10) red LED light heads w/chrome flanges. Locate side facing lights: [#LOC]. | 3447 |
| 5550-0055 | Federal Signal QuadraFlare LED lower level warning light package. Includes (10) QL64XF-R LED light heads with bezels. Locate side facing lights: [#LOC]. | 2883 |
| 5550-0059 | Whelen Super LED lower level warning light package. Includes (8) red 600 LED light heads and (2) red 500 LED light heads w/chrome flanges. Locate side facing lights: [#LOC]. | 3257 |
| 5550-0063 | Whelen Super LED lower level warning light package. Includes (8) 600 Series (2) 400 Series and chrome flanges. For use with commercial chassis w/o ext bumper. Locate side facing lights: [#LOC]. | 3528 |
| 5550-0067 | Flash rate for Federal QuadraFlare LED lower level warning lights to be set at pattern 4 (75 QFPM). | 103 |
| 5550-0069 | Flash rate for Federal QuadraFlare LED lower level warning lights to be set at pattern 5 (150 DFPM). | 103 |
| 5550-0072 | Whelen 600 series Super LED lower level warning light package. Includes (8) red/amber and (2) red LED light heads w/chrome flanges. Locate side facing lights: [#LOC]. | 3886 |
| 5550-0073 | Whelen Super LED lower level warning light package. Includes (8) 600 Super LED light heads and (2) 900 Super LED light heads w/chrome flanges where applicable. Locate side facing lights: [#LOC]. | 3794 |
| 5550-0077 | Federal Signal QuadraFlare LED upper level side warning light package. Includes (4) QL64XF red LED light heads with bezels. Located 2 side facing on Driver and Officer side upper rear corners. | 1390 |
| 5550-0082 | Federal Signal QuadraFlare LED upper level rear warning light package. Includes (4) QL64XF red LED light heads with bezels. Located (2) driver and (2) officer upper rear corners. | 1390 |
| 5550-0083 | Federal Signal QuadraFlare LED upper level rear warning light package. Includes (2) QL64XF red LED light heads with bezels. Located (1) driver and (1) officer upper rear corners. | 697 |
| 5550-0086 | Whelen 900 series Super LED upper level side warning light package. Includes (2) red Whelen 900 Super LED model 90RR5FRR lights. Includes weatherproof connectors. Located (1) on the driver and (1) on the officer side upper rear side corners. | 1271 |
| 5550-0087 | Whelen 900 series strobe upper level side warning light package. Includes (2) Whelen 900 series strobe lights model 90F000RR with red lenses. Includes weatherproof connectors. Located 1 on the Driver and 1 on the Officer side upper rear corners. | 543 |
| 5550-0088 | Whelen 900 series Super LED upper level rear panel warning light package. Includes (2) red Whelen 900 Super LEDs lights model 90RR5FRR. Includes weatherproof connectors. Located (1) driver and (1) officer upper rear corners. | 1271 |

| Item No. | Description | |
|---|---|---|
| 5550-0089 | Whelen 900 series strobe upper level rear warning light package. Includes (2) Whelen 900 series strobe lights model 90F000AU with Amber lenses. Includes weatherproof connectors. Located (1) Driver and (1) Officer upper rear corners. | 543 |
| 5550-0091 | Whelen strobe/LED 6/2/2 lower level warning light package. Includes (6) 600 series strobes (2) 700 series strobes and (2) 500 series LED light heads w/weatherproof connectors and required power supplies. Locate side facing lights: [#LOC]. | 3616 |
| 5550-0092 | Whelen strobe/LED 6/2/2 lower level warning light package. Includes (6) 600 series super LED (2) 700 series split lens strobes and (2) 500 series super LED light heads w/weatherproof connectors and required power supplies. Locate side facing lights: [#LOC] | 4123 |
| 5550-0093 | Whelen Super LED lower level warning light package. Includes (6) 600 LED red light heads (2) 400 LED red light heads and (2) 500 red LED light heads w/chrome flanges. Locate side facing lights: [#LOC] | 3108 |
| 5550-0094 | Federal Signal strobe lower level warning light package. Includes (8) GS5 strobes and (2) GS2 strobes lts. All lenses to be blue except mid-body which are red. Locate side facing lights: [#LOC] | 3936 |
| 5550-0095 | Whelen Super LED lower level warning light package. Includes (7) 600 red LED light heads and (3) 600 blue LED light head w/chrome flanges. Locate side facing lights: [#LOC] | 3447 |
| 5550-0096 | Weldon Diamondback V46 LED lower level warning light package. Includes (10) red LED light heads w/chrome flanges. Locate side facing lights: [#LOC]. | 3501 |
| 5550-0097 | Whelen 400 series linear Super LED lower level warning light package. Includes (10) red LED light heads w/chrome flanges. Locate side facing lights: [#LOC]. | 5271 |
| 5550-0099 | Whelen Super LED lower level warning light package. Includes (4) red 600 LED light heads (4) red/clear 600 split LED light heads and (2) red 500 LED light heads w/chrome flanges. Locate side facing lights: [#LOC]. | 4329 |
| 5550-0100 | Whelen Super LED lower level warning light package. Includes (6) red 600 LED light heads and (4) red 500 LED light heads w/chrome flanges. Locate side facing lights: [#LOC]. | 3257 |
| 5550-0101 | Whelen Super LED lower level warning light package. Includes (6) 600 red LED light heads (2) 900 red LED light heads and (2) 500 red LED light heads w/chrome flanges. Locate side facing lights: [#LOC]. | 3424 |
| 5550-0102 | Whelen Super LED lower level warning light package. Includes (6) 600 LED light heads (2) 900 LED light heads and (2) 500 LED light heads w/chrome flanges. Locate side facing lights: [#LOC]. | 3424 |
| 5550-0103 | Whelen Super LED lower level warning light package. Includes (8) 600 Super LED light heads and (4) 500 Super LED light heads w/chrome flanges where applicable. Locate side facing lights: [#LOC]. | 4492 |
| 5550-0104 | Whelen 600 series Super LED lower level warning light package. Includes (8) red and (2) red/white LED light heads w/chrome flanges. Locate side facing lights: [#LOC]. | 4022 |
| 5550-0106 | Whelen Super LED lower level warning light package. Includes (6) 600 red LED light heads (2) 400 amber LED light heads and (2) 500 red LED light heads w/chrome flanges. Locate side facing lights: [#LOC]. | 3108 |
| 5550-0107 | Whelen Super LED lower level warning light package. Includes (8) red 600 LED light heads and (2) red 500 LED light heads w/chrome flanges. Locate side facing lights: [#LOC]. | 3257 |
| 5550-0109 | Federal Signal QuadraFlare LED lower level warning light package. Includes (5) QL64XF-R LED light heads with bezels and (5) QL64XF-B LED light heads with bezels. Lights to alternate red/blue around unit; see specificaton. Locate side facing lights: [#LOC]. | 2883 |
| 5550-0110 | Whelen Super LED lower level warning light package. Includes (4) red 600 LED light heads (4) blue 600 LED light heads (1) red 500 LED light head and (1) blue 500 LED light head. LIghts to alternate red/blue around unit; see specification. Locate side facing lights: [#LOC]. | 3257 |
| 5550-0112 | Federal Signal QuadraFlare LED upper level side warning light package. Includes (2) QL97XF red LED light heads with bezels. Located (1) side facing on Driver and Officer side upper rear corners. | 1004 |
| 5550-0113 | Federal Signal QuadraFlare LED upper level rear warning light package. Includes (2) QL97XF red LED light heads with bezels. Located (1) Driver and (1) Officer upper rear corners. | 1004 |
| 5550-0114 | Weldon Diamondback V46 LED lower level warning light package. Includes (10) red LED light heads w/clear lenses and chrome flanges. Locate side facing lights: [#LOC]. | 3501 |
| 5550-0117 | Whelen Super LED lower level warning light package. Includes (6) 600 Super LED light heads (2 red forward/2 red rearward/2 amber rearward) and (6) side facing 500 Super LED red light heads w/chrome flanges where applicable. Requires additional side facing lights midship to meet blocking mode. Locate side facing lights: [#LOC]. | 4444 |
| 5550-0123 | Whelen M6 Super LED lower level warning light package. Includes (8) red M6R LED light heads and (2) red 500 Super LED light heads w/chrome flanges. Locate side facing lights: [#LOC]. | 3628 |
| 5550-0125 | Whelen M6RC Super LED lower level warning light package. Includes (8) red M6RC LED light heads and (2) red 500 Super LED light heads w/chrome flanges and clear lenses. Locate side facing lights: [#LOC]. | 3628 |
| 5550-0127 | Federal Signal QuadraFlare LED lower level warning light package. Includes (10) QL64XFC-R LED light heads with clear lenses and bezels. Locate side facing lights: [#LOC]. | 2883 |

| Item No. | Description | |
|---|---|---|
| 5550-0128 | Whelen Super LED lower level warning light package. Includes (6) red 600 LED light heads (2) red LIN3 lights and (2) red 500 LED light heads w/chrome flanges. Locate side facing lights: [#LOC]. | 3257 |
| 5550-0129 | Whelen 600 series Super LED lower level warning light package. Includes (5) red LED light heads w/chrome flanges and (5) blue LED light heads w/chrome flanges. LIghts to alternate red/blue around unit; see specification. Locate side facing lights: [#LOC]. | 3447 |
| 5550-0130 | Weldon Diamondback V46W-C/V26W-C LED lower level warning light package. Includes (8) red V46 LED light heads w/clear lenses and (2) red V26 LED light heads w/clear lenses. Locate side facing lights: [#LOC]. | 3381 |
| 5550-0131 | Whelen Super LED lower level warning light package. Includes (8) 600 LED light heads (7 red1 blue rear facing officer side) and (2) red 500 LED light heads w/chrome flanges. Locate side facing lights: [#LOC]. | 3257 |
| 5550-0132 | Whelen Super LED lower level warning light package. Includes (8) red 600 LED light heads and (2) red TIR3 LED light heads grommet mounted. Locate side facing lights: [#LOC]. | 3103 |
| 5550-0133 | Whelen 500 Series Super LED upper level rear warning light package. Includes (4) red Whelen 500 Super LED TIR6 lights with chrome bezels and clear lenses. Includes weatherproof connectors. Locate (1) rear facing each side up high (1) side facing each side up high rearward on the body. | 1135 |
| 5550-0135 | Whelen Super LED lower level warning light package with clear lenses. Includes (6) red 600 LED light heads (2) red/clear 600 split LED light heads (side facing forward position) and (2) red 500 LED light heads w/chrome flanges. Locate side facing lights: [#LOC]. | 4002 |
| 5550-0148 | Whelen M6 Super LED lower level warning light package. Includes (6) red M6RC LED light heads with clear lenses and chrome flanges (4) split red/clear M6D light heads with clear lenses and chrome flanges. See specifications for locations of split lights. Locate side facing lights: [#LOC]. | 4144 |
| 5550-0149 | Whelen M6 Super LED lower level warning light package. Includes (10) red M6R LED light heads w/chrome flanges. Locate side facing lights: [#LOC]. | 4087 |
| 5550-0152 | Federal Signal QuadraFlare LED lower level warning light package. Includes (8) QL64XF-R red LED light heads with bezels and (2) forward facing QL64SFC-RC split red/clear LED light heads with bezels. Locate side facing lights: [#LOC]. | 2991 |
| 5550-0154 | Whelen M6 Super LED lower level warning light package. Includes (1) red M6RC LED light head with clear lens and chrome flange (1) blue M6BC with clear lens and chrome flange and (8) split red/clear M6D light heads with clear lenses and chrome flanges. Locate side facing lights: [#LOC]. | 4436 |
| 5550-0155 | Whelen Super LED lower level warning light package with clear lenses. Includes (8) 600 LED light heads (6 red2 blue; (1) forward and (1) rearward facing officer side) and (2) red 500 LED light heads w/chrome flanges. Locate side facing lights: [#LOC]. | 3257 |
| 5550-0158 | Federal Signal Viper EXT LED upper level rear warning light package. Includes (9) Viper EXT red LEDs; (5) center upper body rear facing (2) driver upper body corner side facing and (2) officer upper body corner side facing. | 2140 |
| 5550-0159 | Whelen M6 Super LED lower level warning light package. Includes (6) M6RC red LED light heads with clear lenses (2) M9RC red LED light heads with clear lenses and (2) red 500 Super LED light heads w/chrome flanges and clear lenses. Locate side facing lights: [#LOC]. | 4663 |
| 5550-0160 | Whelen M-Series Super LED upper level rear warning light package. Includes (2) red Super LED model M9RC lights with weatherproof connectors and clear lenses. Located rear of body (1) Driver and (1) Officer side upper body.. | 1332 |
| 5550-0161 | Whelen M-Series Super LED upper level side warning light package. Includes (2) red Super LED model M9RC lights with weatherproof connectors and clear lenses. Located side of body (1) on the Driver and (1) on the Officer side upper rear side corners. | 1332 |
| 5550-0164 | Whelen 600 series Super LED lower level warning light package. Includes (10) red LED light heads w/clear lenses and chrome flanges. Locate side facing lights: [#LOC]. | 3447 |
| 5550-0169 | Federal Signal QuadraFlare LED lower level warning light package. Includes (10) QL64XF-B blue LED light heads with bezels. Locate side facing lights: [#LOC]. | 2883 |
| 5550-0170 | Whelen Super LED lower level warning light package. Includes (8) 600 Series (4) red & (4) blue (2) 400 Series (1) red & (1) blue and chrome flanges alternating in colors. Locate side facing lights: at forward most position in rear wheelwell offset to front and on tailboard mounted light box above rear tailboard. Lights will alternate color from light to light. All lights will have clear lenses with colored LEDs. | 3447 |
| 5550-0171 | Whelen Super LED lower level warning light package. Includes (4) red 600 LED light heads (4) blue 600 LED light heads (1) red 500 LED light head and (1) blue 500 LED light head. Lights to be driver side red officer side blue; see specification. Locate side facing lights: [#LOC]. | 3257 |
| 5550-0173 | Whelen M6 Super LED lower level warning light package. Includes (8) red M6R LED light heads and (2) red M2R LED light heads. Locate side facing lights: [#LOC]. | 3628 |
| 5550-0178 | Whelen Super LED lower level warning light package with clear lens. Includes (8) red 600 LED light heads and (2) red 500 LED light heads w/chrome flanges. Locate side facing lights: [#LOC]. | 3257 |

| Item No. | Description | |
|---|---|---|
| 5550-0180 | Whelen M6 Super LED lower level warning light package. Includes (10) red M6 LED light heads w/clear lenses and chrome flanges. Locate side facing lights: [#LOC]. | 4087 |
| 5550-0181 | Whelen Super LED lower level warning light package with clear lenses. Includes (8) red/clear M6 split LED light heads and (2) split red/clear M2 LED light heads w/chrome flanges. State of Maryland only. Locate side facing lights: [#LOC]. | 4475 |
| 5550-0183 | Whelen M6 Super LED lower level warning light package. Includes (8) red M6R LED light heads and (2) red TIR3 LED light heads. Locate side facing lights: [#LOC]. | 3628 |
| 5550-0188 | Whelen M6 Super LED lower level warning light package. Includes (6) red M6R and (4) blue M6B LED light heads w/chrome flanges. See specifications for color locations. Locate side facing lights: [#LOC]. | 4087 |
| 5550-0189 | Whelen Super LED lower level warning light package. Includes (7) red 600 LED light heads (1) blue 600 LED light heads and (2) red 500 LED light heads. Locate side facing lights: [#LOC]. | 3257 |
| 5550-0190 | Federal Signal QuadraFlare LED lower level warning light package. Includes (5) QL64XF-R LED light heads with bezels and (5) QL64XF-B LED light heads with bezels. Lights to alternate red/blue around unit; see specificaton. Locate side facing lights: [#LOC]. | 2883 |
| 5550-0191 | Weldon Diamondback V46/V79 LED lower level warning light package. Includes (8) red V46 LED light heads w/clear lenses and (2) red V79 LED light heads w/clear lenses. Locate side facing lights: [#LOC]. | 4109 |
| 5550-0192 | Federal Signal QuadraFlare LED lower level warning light package. Includes (8) QL64XF-R LED light heads with bezels and (2) IMPAXX LED model IPX302-4 light heads. Locate side facing lights: [#LOC]. | 2583 |
| 5550-0193 | Federal Signal QuadraFlare LED lower level warning light package. Includes (6) QL64XF-R LED light heads with bezels and (4) IMPAXX LED model IPX302-4 light heads. Locate side facing lights: [#LOC]. | 2398 |
| 5550-0194 | Federal Signal QuadraFlare LED lower level warning light package. Includes (4) QL64XF-R LED light heads (4) QL64XF-B LED light heads (1) IMPAXX LED model IPX302-3 light head and (1) IMPAXX LED model IPX302-4 light head. Lights to alternate red/blue around unit; see specification. Locate side facing lights: [#LOC]. | 2631 |
| 5550-0197 | Weldon Diamondback LED lower level warning light package. Includes (4) red V46 LED light heads w/clear lenses (4) red V79 LED light heads w/clear lenses and (2) red V26 LED light heads w/clear lenses. Locate side facing lights: [#LOC]. | 4599 |
| 5550-0210 | Federal Signal QuadraFlare LED lower level warning light package. Includes (8) Quadraflare light heads (7) QL64XF-R (red) LED lights and (1) QL64XF-B (blue) LED light with bezels and (2) IMPAXX LED model IPX302-4 light heads. Locate side facing lights: [#LOC]. | 2583 |
| 5550-0211 | Whelen Super LED lower level warning light package with clear lenses. Includes (8) 600 LED light heads (4 red driver's side 4 blue officer's side) and (2) 500 LED light heads (1 red driver's side 1 blue officer's side)w/chrome flanges. Locate side facing lights: [#LOC]. | 3257 |
| 5550-0212 | Whelen 900 series Super LED upper level rear panel warning light package. Includes (2) Whelen 900 Super LED lights with clear lens. (1) red model 90RRF5CR driver's side and (1) blue model 90BBF5CR officer's side. Includes weatherproof connectors. Located upper rear corners. | 1271 |
| 5550-0213 | Whelen Super LED lower level warning light package. Includes (6) red 600 LED light heads (2) red LIN3 lights and (2) red 500 LED light heads w/chrome flanges and clear lenses. Locate side facing lights: [#LOC]. | 3257 |
| 5550-0214 | Whelen Super LED lower level warning light package with clear lens. Includes (7) red 600 LED light heads (1) blue 600 LED light heads and (2) red 500 LED light heads. Locate side facing lights: [#LOC]. | 3257 |
| 5550-0215 | Whelen 900 series Super LED upper level side warning light package with clear lens. Includes (2) red Whelen 900 Super LED lights. Includes weatherproof connectors. Located (1) on the driver and (1) on the officer side upper rear body panels. | 1271 |
| 5550-0216 | Whelen 900 series Super LED upper level rear panel warning light package with clear lens. Includes (1) red (1) blue Whelen 900 Super LEDs lights. Includes weatherproof connectors. Located (1) red on driver and (1) blue on officer upper rear corners. | 1271 |
| 5550-0217 | Federal Signal QuadraFlare LED lower level warning light package. Includes (2) QL64XF-R LED light heads with bezels (chrome) and (6) IMPAXX LED model IPX302-4 light heads with bezels (chrome). Locate side facing lights: [#LOC]. | 2233 |
| 5550-0220 | Federal Signal QuadraFlare LED lower level warning light package. Includes (6) QL64XF-R LED light heads with bezels and (4) IMPAXX LED model IPX602-R light heads. Locate side facing lights: [#LOC]. | 2882 |
| 5550-0223 | Whelen 900 series Super LED upper level side warning light package. Includes (2) red Whelen 900 Super LED model 90RRF5RR lights. Includes weatherproof connectors. Located (1) on the driver and (1) on the officer side upper forward side corners. | 1271 |
| 5550-0225 | Whelen M6 Super LED lower level warning light package. Includes (8) red M6RC LED light heads with clear lens and (2) red M2RC LED light heads with clear lens. Locate side facing lights: [#LOC]. | 3628 |

| Item No. | Description | |
|---|---|---|
| 5550-0227 | Whelen M6/M7/600/IONWR Super LED lower level warning light package. Includes (2) red M6R LED light heads (4) split red/clear M7D light heads (2) 600 Series Super LED light heads Red with clear lenses and (2) red IONWR LED light heads. See specification for location of split lights. Locate side facing lights: [#LOC]. | 4278 |
| 5550-0229 | Federal Signal QuadraFlare LED lower level warning light package. Includes (4) QL64XF-R LED light heads with bezels and (6) IMPAXX LED model IPX302-4 light heads. Locate side facing lights: [#LOC]. | 2398 |
| 5550-0233 | Whelen Super LED lower level warning light package. Includes (6) red 600 LED light heads (2) red LIN3 lights and (2) red 500 LED light heads w/chrome flanges. Locate side facing lights: [#LOC]. | 3257 |
| 5550-0234 | Whelen M6RC Super LED lower level warning light package. Includes (8) red M6RC LED light heads and (2) red 500 Super LED light heads w/chrome flanges and clear lenses. Locate side facing lights: [#LOC]. | 3628 |
| 5550-0236 | Whelen M6 Super LED lower level warning light package. Includes (6) red M6R LED light heads (2) blue M6B LED light heads (1 officer front and 1 officer rear facing) and (2) red M2R LED light heads. Locate side facing lights: [#LOC]. | 3628 |
| 5550-0238 | Federal Signal QuadraFlare LED lower level warning light package. Includes (3) QL64XF-R LED light heads (3) QL64XF-B LED light heads (2) IMPAXX LED model IPX302-3 light head and (2) IMPAXX LED model IPX302-4 light head. Lights to alternate red/blue around unit; see specification. Locate side facing lights: [#LOC]. | 2631 |
| 5550-0240 | Whelen Super LED lower level warning light package. Includes (8) red 600 LED light heads and (2) red 500 LED light heads w/chrome flanges. Locate side facing lights: [#LOC]. | 3257 |
| 5550-0241 | Whelen M6 Super LED lower level warning light package. Includes (6) M6R red LED light heads (2) M9R red LED light heads and (2) red M2R red Super LED light heads. Locate side facing lights: [#LOC]. | 4663 |
| 5550-0242 | Whelen Super LED lower level warning light package. Includes (8) 600 LED light heads (6) Red/Blue (2) Red /White with clear lenses and (2) red 500 LED light heads with clear lenses and chrome flanges. Locate side facing lights: [#LOC]. | 3682 |
| 5550-0245 | Whelen Super LED lower level warning light package. Includes (4) red 600 LED light heads (4) blue 600 LED light heads (1) red 500 LED light head and (1) blue 500 LED light head all with clear lenses. Lights to be driver side blue officer side red; see specification. Locate side facing lights: [#LOC]. | 3257 |
| 5550-0248 | Federal Signal QuadraFlare LED lower level warning light package with clear lenses. Includes (8) QL64XFC-R LED light heads with bezels and (2) IMPAXX LED model IPX300-4 light heads. Locate side facing lights: [#LOC]. | 2583 |
| 5550-0249 | Whelen M6 Super LED lower level warning light package. Includes (5) red M6R LED light heads (2) M6J split red/blue LED light heads (1) blue M6B LED light head (officer front) and (2) red M2R LED light heads. Locate side facing lights: [#LOC]. | 4110 |
| 5550-0250 | Whelen Super LED lower level warning light package. Includes (4) red 600 LED light heads (4) red LIN3 lights and (2) red 500 LED light heads w/chrome flanges. Locate side facing lights: [#LOC]. | 2806 |
| 5550-0251 | Whelen 600 series Super LED lower level warning light package. Includes (10) LED light heads w/chrome flanges. (5) Red (5) blue alternating. Locate side facing lights: [#LOC]. | 3447 |
| 5550-0252 | Whelen 600 series Super LED lower level warning light package. Includes (8) red LED light heads with clear lenses and (2) split red/blue LED light heads with clear lenses. Locate side facing lights: [#LOC]. | 3508 |
| 5550-0253 | Whelen M-Series Super LED upper level rear warning light package. Includes (2) Super LED M9 series lights (1) red Super LED model M9RC light on the officer side (1) blue Super LED model M9BC light on the driver side with weatherproof connectors and clear lenses. Located (1) Driver and (1) Officer upper rear corners. | 1332 |
| 5550-0254 | Whelen M6 Super LED lower level warning light package. Includes (4) red M6RC LED light heads with clear lenses and chrome flanges (4) split red/clear M6D light heads with clear lenses and chrome flanges and (2) red M2RC LED light heads. See specifications for locations of split lights. Locate side facing lights: [#LOC]. | 4114 |
| 5550-0255 | Whelen 900 series Super LED upper level rear panel warning light package with clear lens. Includes (2) red Whelen 900 Super LEDs lights model 90RR5FCR. Includes weatherproof connectors. Located Rear of body (1) driver and (1) officer upper rear corners. | 1271 |
| 5550-0256 | Federal Signal QuadraFlare LED upper level rear warning light package. Includes (2) QL97XF (1) blue and (1) red LED light heads with bezels. Located (1) blue on the driver and (1) red on the officer side of upper rear corners. | 1004 |
| 5550-0257 | Whelen M6 Super LED lower level warning light package. Includes (10) red/blue M6J LED light heads w/chrome flanges and clear lenses. Locate side facing lights: [#LOC]. | 4035 |
| 5550-0258 | Whelen M6 Super LED lower level warning light package. Includes (4) red M6R LED light heads (4) blue M6B LED light heads (1) red M2R LED light head and (1) blue M2B LED light head. Driver side red officer side blue. Locate side facing lights: [#LOC]. | 3628 |

| Item No. | Description | |
|---|---|---|
| 5550-0260 | Federal Signal QuadraFlare LED lower level warning light package. Includes (4) QL64XF-R LED light heads (4) QL64XF-B LED light heads (1) IMPAXX LED model IPX302-3 light head and (1) IMPAXX LED model IPX302-4 light head. Lights to alternate red/blue around unit; see specification. Locate side facing lights: [#LOC]. | 2631 |
| 5550-0261 | Whelen M6 Super LED lower level warning light package. Includes (10) M6RC red LED with clear lens light heads w/chrome flanges. Locate side facing lights: [#LOC]. | 4087 |
| 5550-0262 | Whelen M6 Super LED lower level warning light package. Includes (10) blue M6B LED light heads w/chrome flanges. Locate side facing lights: [#LOC]. | 4087 |
| 5550-0264 | Power Arc LED 4/2/2/2 red/white/blue/yellow lower level warning light package. Includes (4) P14SM (2) M90DHL (1-WR 1-BW) (2)M90FK and (2) LED210. See specifications for exact locations and colors. Locate side facing lights: [#LOC]. | 6527 |
| 5550-0265 | Whelen M6 Super LED lower level warning light package. Includes (4) red M6R LED light heads (4) blue M6B LED light heads (1) red M2R LED light head and (1) blue M2B LED light head. Alternate red/blue around unit. Locate side facing lights: [#LOC]. | 3628 |
| 5550-0266 | Federal Signal QuadraFlare LED lower level warning light package. Includes (6) QL64XF-R LED light heads with bezels (2) QL64SFC-WR and (2) IMPAXX LED model IPX302-4 light heads. Locate side facing lights: [#LOC]. | 3304 |
| 5550-0267 | Whelen Super LED lower level warning light package. Includes (8) red 600 LED light heads and (2) red 500 LED light heads w/chrome flanges. Locate side facing lights: [#LOC]. | 3257 |
| 5550-0269 | Federal Signal QuadraFlare LED lower level warning light package. Includes (5) QL64XF-R LED light heads with bezels (3) QL64XF-B LED light heads with bezels and (2) QL64XF-A LED light heads with bezels. Lights to located as per specificaton. Locate side facing lights: [#LOC]. | 2883 |
| 5550-0274 | Federal Signal QuadraFlare LED lower level warning light package. Includes (7) QL64XF-R LED light heads (1) QL64XF-G light head and (2) IMPAXX LED model IPX302-4 light heads. Locate side facing lights: [#LOC]. | 2890 |
| 5550-0275 | Whelen M6 Super LED lower level warning light package. Includes (6) red M6R LED light heads and (4) red M2R LED light heads. Locate side facing lights: [#LOC]. | 3456 |
| 5550-0276 | Code3 LED 6/2/2 lower level warning light package. Includes (8) model 65 red LED and (2) LXEX1F red LED lights all with clear lenses. Includes chrome bezels where applicable. Locate side facing lights: [#LOC]. | 3631 |
| 5550-0277 | Federal Signal QuadraFlare LED lower level warning light package with clear lenses. Includes (8) QL64XFC-R red LED light heads with bezels and (2) IMPAXX LED model IPX600-B blue light heads. Locate side facing lights: [#LOC]. | 2654 |
| 5550-0278 | Federal Signal QuadraFlare LED lower level warning light package. Includes (7) QL64XF-R LED (1) QL64XF-B LED light head with bezel (driver rear facing) and (2) IMPAXX LED model IPX302-4 light heads. Locate side facing lights: at forward most position centered in rear wheel well and side facing at rear of body in rubrail if equipped. | 2583 |
| 5550-0279 | Federal Signal QuadraFlare LED lower level warning light package. Includes (6) QL64XF-R LED light heads with bezels and (4) IMPAXX LED model IPX302-4 light heads. Locate side facing lights: [#LOC]. | 2398 |
| 5550-0280 | Federal Signal QuadraFlare LED lower level warning light package. Includes (8) QL64XF-B LED light heads with bezels and (2) IMPAXX LED model IPX302-3 light heads. Locate side facing lights: [#LOC]. | 2583 |
| 5550-0281 | Whelen M6 Super LED lower level warning light package. Includes (6) red M6R LED light heads (2) red 600 LED light heads and (2) red TIR3 LED light heads. Locate side facing lights: [#LOC]. | 3466 |
| 5550-0282 | Whelen M6 Super LED lower level warning light package. Includes (8) red M6R and (2) blue M6B LED light heads w/chrome flanges. See specifications for color locations. Locate side facing lights: [#LOC]. | 4087 |
| 5550-0283 | Code3 LED 8/2 red/blue lower level warning light package. Includes (8) model 65 LED and (2) LXEX1F LED lights. See specification for exact locations. Includes chrome bezels where applicable. Locate side facing lights: [#LOC]. | 3631 |
| 5550-0284 | Whelen 900 series Super LED upper level rear panel warning light package (1) with red lens and (1) with blue lens. Includes weatherproof connectors. Located (1) blue on driver and (1) red on officer upper rear corners. | 1271 |
| 5550-0285 | Whelen M6 Super LED lower level warning light package. Includes (7) red M6R LED light heads (1) green M6G and (2) red M2R LED light heads. Locate side facing lights: [#LOC]. | 3686 |
| 5550-0286 | Federal Signal QuadraFlare LED lower level warning light package with clear lenses. Includes (6) QL64SFC-RR LED light heads with bezels (2) QL64SFC-WR and (2) IMPAXX LED model IPX300-4 light heads. See specification for exact locations. Locate side facing lights: [#LOC]. | 3426 |
| 5550-0287 | Whelen Super LED lower level warning light package. Includes (6) red M6R LED light heads (2) red 600 LED light heads and (2) red M2R LED light heads. Locate side facing lights: [#LOC]. | 3628 |

| Item No. | Description | |
|---|---|---|
| 5550-0288 | Whelen Super LED lower level warning light package. Includes (6) 600 LED light heads; (3) red/(3) blue (2) 900 LED light heads; (1) red/(1) blue and (2) 500 LED light heads; (1) red/(1) blue w/chrome flanges. See specifications for exact locations of lights. Locate side facing lights: [#LOC]. | 3424 |
| 5550-0289 | Whelen M6/M7/M2/M9 Super LED lower level warning light package with clear lenses. Includes (2) red M6RC LED light heads (4) red M7RC light heads (2) red M2RC LED light heads and (2) red M9RC LED light heads. See specification for exact locations lights. Locate side facing lights: [#LOC]. | 4242 |
| 5550-0290 | Whelen M6 Super LED lower level warning light package. Includes (6) red M6RC LED light heads (2) split red/amber M6K light heads and (2) red M2RC LED light heads. Locate side facing lights: [#LOC]. | 4007 |
| 5550-0291 | Whelen Super LED lower level warning light package. Includes (6) red M6RC LED light heads with clear lenses (2) red 600 LED light heads with clear lenses and (2) red M2RC LED light heads with clear lenses. Locate side facing lights: [#LOC]. | 3628 |
| 5550-0293 | Whelen Super LED lower level warning light package with clear lenses. Includes (8) red 600 LED light heads and (2) red TIR3 LED light heads grommet mounted. Locate side facing lights: [#LOC]. | 3103 |
| 5550-0295 | Whelen M6 Super LED lower level warning light package. Includes (6) red M6RC LED light heads (2) red 6RBRC Rota-Beam LED and (2) red M2RC LED light heads with clear lenses. Locate side facing lights: [#LOC]. | 4290 |
| 5550-0296 | Whelen LED upper level rear warning light package. Includes (1) rear facing Dominator Plus model DP88000 red and (2) 700 series Super LED; (1) driver upper body corner side facing and (1) officer upper body corner side facing. | 2496 |
| 5550-0298 | Whelen M6 Super LED lower level warning light package. Includes (6) M6RC red LED light heads (2) M9 (1 red 1 blue) LED light heads w/clear lenses and (2) red M2RC red Super LED light heads. Locate side facing lights: [#LOC]. | 4663 |
| 5550-0299 | Whelen M6 Super LED lower level warning light package. Includes (7) red M6R and (3) blue M6B LED light heads w/chrome flanges. See specifications for color locations. Locate side facing lights: [#LOC]. | 4087 |
| 5550-0304 | Whelen M6 Super LED lower level warning light package. Includes (8) red M6R LED light heads and (2) red PSR00FRR Super LED light heads w/chrome flanges. Locate side facing lights: [#LOC]. | 3628 |
| 5550-0305 | Federal Signal QuadraFlare LED lower level warning light package. Includes (6) QL64XF-R LED light heads with bezels (2) QL64SFC-WR and (2) IMPAXX LED model IPX302-4 light heads. Locate side facing lights: [#LOC]. | 3304 |
| 5550-0306 | Whelen Super LED lower level warning light package. Includes (8) red 600 LED light heads and (2) red 500 LED light heads w/black flanges. Locate side facing lights: [#LOC]. | 3257 |
| 5550-0307 | Whelen M6 Super LED lower level warning light package. Includes (8) red M6RC LED light heads with clear lens and (and (2) red TIR3 LED light heads grommet mounted with clear lenses. Locate side facing lights: [#LOC]. | 3628 |
| 5550-0309 | Whelen Super LED lower level warning light package. Includes (6) 600 LED light heads (4 red 2 blue) and (4) red 500 LED light heads w/chrome flanges. Locate side facing lights: [#LOC]. | 3257 |
| 5550-0310 | Whelen M6 Super LED lower level warning light package. Includes (6) M6RC red LED light heads (2) M9RC red LED light heads (rear facing) and (2) red M2RC red Super LED light heads. Locate side facing lights: [#LOC]. | 4663 |
| 5550-0311 | Whelen M6 Super LED lower level warning light package with clear lenses. Includes (7) red M6RC LED light heads (1) blue M6BC light head and (2) blue M2BC LED light heads. Locate side facing lights: [#LOC]. | 3628 |
| 5550-0312 | Whelen M6 Super LED lower level warning light package. Includes (4) M6RC red LED light heads (2) M9RC red LED light heads and (4) red M2RC red Super LED light heads. Locate side facing lights: [#LOC]. | 4593 |
| 5550-0313 | Whelen Super LED lower level warning light package with clear lenses. Includes (8) 600 LED light heads (1 red 7 blue) and (2) blue 500 LED light heads w/chrome flanges. Locate side facing lights: [#LOC]. | 3257 |
| 5550-0314 | Whelen Super LED lower level warning light package with clear lens. Includes (5) red 600 LED light heads (3) blue 600 LED light heads and (2) red 500 LED light heads. Locate side facing lights: [#LOC]. | 3257 |
| 5550-0315 | Power Arc LED 4/4/2 lower level warning light package. Includes 210LED-1B frt dr side 210LED-2R frt off side 210LED-2R rr dr side 210LED-1B rr off side and (4) P14SM; (2) red (2) blue. Locate side facing lights: [#LOC]. | 4872 |
| 5550-0316 | Whelen M6 Super LED lower level warning light package. Includes (8) red M6RC LED light heads with clear lens and (2) red PSR00FRR LED light heads. Locate side facing lights: [#LOC]. | 3628 |
| 5550-0317 | Whelen M6 Super LED lower level warning light package with clear lenses. Includes (4) M6V2 (2 red 2 blue) LED light heads (4) M6 (2 red 2 blue) LED light heads and (2) TIR3 (1 red 1 blue) LED light heads. See specifications for exact locations. Locate side facing lights: [#LOC]. | 5425 |

| Item No. | Description | |
|---|---|---|
| 5550-0318 | Whelen Super LED lower level warning light package. Includes (6) red 600 LED light heads (2) red M6V2R LED light heads and (2) red 500 LED light heads w/chrome flanges. Locate side facing lights: [#LOC]. | 4305 |
| 5550-0319 | Whelen Super LED lower level warning light package with clear lenses. Includes (4) 600 LED light heads (2-red 2-blue) (4) 600 split LED light heads (2-red/clear 2-red/blue) and (2) 500 split red/blue TIR6 LED light heads w/chrome flanges. Locate side facing lights: [#LOC]. | 4376 |
| 5550-0320 | Whelen Super LED lower level warning light package. Includes (6) red 600 LED light heads. (2) blue 600 LED light heads and (2) red 500 LED light heads w/chrome flanges. Locate side facing lights: [#LOC]. | 3257 |
| 5550-0321 | Federal Signal QuadraFlare LED lower level warning light package. Includes (2) QL64XF-R red LED light heads (4) QL64SFC-RC split red/clear LED light heads (2) QL64XF-B LED (rear facing) light heads and (2) IMPAXX LED model IPX302-4 light heads. Locate side facing lights: [#LOC]. | 2987 |
| 5550-0322 | Power Arc LED 4/2/2/2 red/white/blue/yellow lower level warning light package. Includes (2)P14SM (2)M90DHL(1-WR 1-BW) (2)M90FK (2)LED210 and (2)PP2-R. See specifications for exact locations and colors. Locate side facing lights: [#LOC]. | 6527 |
| 5550-0324 | Whelen 600 series Super LED lower level warning light package. Includes (5) driver red LED light heads w/chrome flanges and (5) officer blue LED light heads w/chrome flanges. Locate side facing lights: [#LOC]. | 3447 |
| 5550-0325 | Whelen M6 Super LED lower level warning light package. Includes (4) red M6R LED light heads (4) red 6RBR Rota-Beam LED and (2) red 5V1R LED light heads. Locate side facing lights: [#LOC]. | 4960 |
| 5550-0326 | Whelen M6 Super LED lower level warning light package. Includes (6) red M6R LED light heads (2) split red/clear M6D LED light heads and (2) red TIR3 LED light heads. Locate side facing lights: [#LOC]. | 3518 |
| 5550-0328 | Whelen M6 Super LED lower level warning light package with clear lenses. Includes (6) red M6RC LED light heads (2) blue M6BC LED light heads (1 officer front and 1 officer rear facing) and (2) red TIR3 LED light heads. Locate side facing lights: [#LOC]. | 3628 |
| 5550-0329 | Whelen Super LED lower level warning light package. Includes (6) red M6R LED light heads (2) blue M6B LED light heads and (2) red TIR6 series Super LED light heads w/chrome flanges. Locate side facing lights: [#LOC]. | 4087 |
| 5550-0330 | Federal Signal QuadraFlare LED lower level warning light package. Includes (9) QL64XF-R LED light heads with bezels and (1) QL64XF-B LED light head with bezel. Locate side facing lights: at forward most position in rear wheelwell offset to front and on tailboard mounted light box above rear tailboard. | 2883 |
| 5550-0331 | Whelen Super LED lower level warning light package with clear lenses. Includes (8) red 600 LED light heads and (2) WIOND split red/clear LED light heads grommet mounted. Locate side facing lights: [#LOC]. | 3215 |
| 5550-0332 | Federal Signal QuadraFlare LED lower level warning light package. Includes (7) QL64XF-R (red) LED lights and (1) QL64XF-B (blue) LED light with bezels and (2) IMPAXX LED model IPX302-4 light heads. Locate side facing lights: [#LOC]. | 2583 |
| 5550-0333 | Whelen Super LED lower level warning light package. Includes (6) red 600 LED light heads and (4) red 500 LED light heads w/chrome flanges. Locate side facing lights: [#LOC]. | 3257 |
| 5550-0334 | Whelen Super LED 4/2/2/2 lower level warning light package with clear lenses. Includes (4) M6RC red (2) M9D split red/clear (2) M7RC red and (2) M2RC red LED light heads w/weatherproof connectors. See specification for exact light locations. Locate side facing lights: [#LOC]. | 4098 |
| 5550-0335 | Whelen M6 Super LED lower level warning light package. Includes (4) red M6RC LED light heads (2) split red/clear M6D light heads (2) red 6RBRC Rota-Beam LED and (2) red M2RC LED light heads with clear lenses. Locate side facing lights: [#LOC]. | 4342 |
| 5550-0336 | Whelen M6 Super LED lower level warning light package with clear lenses. Includes (7) red M6RC LED light heads (1) green M6GC and (2) red M2R CLED light heads. Locate side facing lights: [#LOC]. | 3686 |
| 5550-0337 | Federal Signal QuadraFlare LED lower level warning light package with clear lenses. Includes (7) QL64SFC-RR LED light heads with bezels (1) QL64SFC-GR and (2) Viper EXT LED model VPX800-4 light heads. See specification for exact locations. Locate side facing lights: [#LOC]. | 3426 |
| 5550-0339 | Whelen M6 Super LED lower level warning light package. Includes (6) M6RC red LED light heads (2) M9RC red LED light heads (side facing) and (2) red M2RC red Super LED light heads. Locate side facing lights: [#LOC]. | 4663 |
| 5550-0340 | Whelen Super LED lower level warning light package with clear lenses. Includes (4) red 600 LED light heads (4) blue 600 LED light heads (1) red 500 LED light head and (1) blue 500 LED light head. LIghts to alternate red/blue around unit; see specification. Locate side facing lights: [#LOC]. | 3257 |
| 5550-0341 | Whelen M6 Super LED lower level warning light package with clear lenses. Includes (4) red M6V2RC LED light heads (4) red M6RC LED light heads and (2) red M2RC LED light heads. Locate side facing lights: [#LOC]. | 5631 |

| Item No. | Description | |
|---|---|---|
| 5550-0342 | Federal Signal QuadraFlare LED lower level warning light package. Includes (4) QL64XF-R LED light heads (4) QL64XF-B LED light heads (1) IMPAXX LED model IPX302-3 light head and (1) IMPAXX LED model IPX302-4 light head. Driver red officer blue. Locate side facing lights: [#LOC]. | 2631 |
| 5550-0343 | Federal Signal QuadraFlare LED lower level warning light package with clear lenses. Includes (8) QL64XFC-R LED light heads with bezels and (2) IMPAXX LED model IPX300-4 light heads. Locate side facing lights: [#LOC]. | 2583 |
| 5550-0344 | Whelen M6 Super LED lower level warning light package. Includes (6) red M6R LED light heads and (4) red 6RBR Rota-Beam LED light heads. Locate side facing lights: [#LOC]. | 4694 |
| 5550-0345 | Federal Signal QuadraFlare LED lower level warning light package. Includes (6) QL64XF-R LED light heads with bezels and (4) IMPAXX LED model IPX602-R light heads. Locate side facing lights: [#LOC]. | 2882 |
| 5550-0346 | Whelen 600 Super LED lower level warning light package. Includes (6) red 600 LED light heads (2) red 6RBR Rota-Beam LED and (2) red 500 LED light heads. Locate side facing lights: [#LOC]. | 3963 |
| 5550-0348 | Federal Signal QuadraFlare LED lower level warning light package. Includes (4) QL64XFC-R LED light heads with bezels (2) QL64SFC-RC LED light heads with bezels and (4) IMPAXX LED model IPX300-4 light heads. See specification for detail of lighting locations. Locate side facing lights: [#LOC]. | 2788 |
| 5550-0349 | Whelen M6 Super LED lower level warning light package with clear lenses. Includes (2) red M6V2RC LED light heads (4) red M6RC LED light heads (2) split red/clear M6D LED light heads and (2) red M2RC LED light heads. Locate side facing lights: [#LOC]. | 4783 |
| 5550-0350 | Whelen M6 Super LED lower level warning light package. Includes (4) red M6RC LED light heads with clear lenses and chrome flanges (2) split red/clear M6D light heads with clear lenses (2) split red/clear M7D light heads with clear lense and chrome flanges and (2) red M2RC LED light heads. See specifications for locations of split lights. Locate side facing lights: [#LOC]. | 4114 |
| 5550-0351 | Whelen M6 Super LED lower level warning light package with clear lenses. Includes (2) red M6V2RC LED light heads (4) red M6RC LED light heads (2) split red/clear M6D LED light heads and (2) red M2RC LED light heads. Locate side facing lights: [#LOC]. | 4783 |
| 5550-0352 | Whelen Super LED lower level warning light package with clear lenses. Includes (8) 600 LED light heads (6 red2 blue; (1) forward and (1) rearward facing driver side) and (2) blue 500 LED light heads w/chrome flanges. Locate side facing lights: [#LOC]. | 3257 |
| 5550-0353 | Whelen M6 Super LED lower level warning light package. Includes (6) M6RC LED light heads (2) M6V2RC LED light heads and (2) TIR3 LED light heads w/chrome flanges. Locate side facing lights: [#LOC]. | 4545 |
| 5550-0354 | Whelen M Series Super LED lower level warning light package. Includes (8) red M6RC LED light heads and (2) red M2RC LED light heads with clear lenses. Locate side facing lights: [#LOC]. | 3628 |
| 5550-0355 | Federal Signal Impaxx LED lower level warning light package. Includes (10) Impaxx LED light heads with bezels located (1) each side of hood area (1) each side forward facing mounted in grill area (1) each side below the forward body compartment (offset rearward) (1) each side below the rearward body compartments (offset rearward) and (1) each side on rear of body down low below the taillights (offset outboard). | 2125 |
| 5550-0357 | Code3 Prizm II model 468R red LED lower level warning light package with chrome bezels (as applicable). Includes (10) LED lights. Locate side facing lights: [#LOC]. | 3344 |
| 5550-0358 | Code3 Prizm II model 468CR red LED lower level warning light package with chrome bezels (as applicable) and clear lenses. Includes (10) LED lights. Locate side facing lights: [#LOC]. | 3344 |
| 5550-0359 | Code3 Prizm II 8/2 red LED lower level warning light package. Includes (8) model 468R red LED and (2) model LXEX1F-R red LED. Locate side facing lights: [#LOC]. | 3280 |
| 5550-0360 | Code3 Prizm II 8/2 red LED lower level warning light package with clear lenses. Includes (8) model 468CR red LED and (2) model LXEX1F-R red LED. Locate side facing lights: [#LOC]. | 3280 |
| 5550-0361 | Whelen Super LED lower level warning light package with clear lenses. Includes (6) red 600 LED light heads and (4) red 500 LED light heads w/chrome flanges. Locate side facing lights: [#LOC]. | 3257 |
| 5550-0363 | Whelen Super LED lower level warning light package with clear lenses. Includes (4) red 600 LED light heads (4) blue 600 LED light heads (1) red 500 LED light head and (1) blue 500 LED light head. LIghts to alternate red/blue around unit; see specification. Locate side facing lights: [#LOC]. | 3257 |
| 5550-0364 | Whelen 600 series Super LED lower level warning light package with clear lenses. Includes (5) red LED light heads w/chrome flanges and (5) blue LED light heads w/chrome flanges. LIghts to alternate red/blue around unit; see specification. Locate side facing lights: [#LOC]. | 3447 |
| 5550-0365 | Federal Signal QuadraFlare LED lower level warning light package with clear lenses. Includes (6) QL64XFC-R LED light heads with bezels and (4) IMPAXX LED model IPX300-4 light heads. Locate side facing lights: [#LOC]. | 2398 |

| Item No. | Description | |
|---|---|---|
| 5550-0366 | Federal Signal QuadraFlare LED lower level warning light package with clear lenses. Includes (4) QL64XFC-R LED light heads (4) QL64XFC-B LED light heads (1) IMPAXX LED model IPX300-3 light head and (1) IMPAXX LED model IPX300-4 light head. Lights to alternate red/blue around unit; see specification. Locate side facing lights: [#LOC]. | 2631 |
| 5550-0369 | Whelen Super LED lower level warning light package. Includes (8) 600 LED light heads (6 red2 blue rear facing) and (2) red 500 LED light heads w/chrome flanges. Locate side facing lights: [#LOC]. | 3257 |
| 5550-0370 | Whelen M6 Super LED lower level warning light package. Includes (6) red M6RC LED light heads with clear lenses and chrome flanges (2) split red/clear M6D light heads with clear lenses and chrome flanges and (2) M2RC red light heads with clear lenses. See specifications for location of split lights. Locate side facing lights: [#LOC]. | 3975 |
| 5550-0371 | Whelen M6 Super LED lower level warning light package. Includes (6) red M6RC LED light heads with clear lenses and chrome flanges (2) split red/clear M6D light heads with clear lenses and chrome flanges and (2) WIONR red light heads with clear lenses. See specifications for location of split lights. Locate side facing lights: [#LOC]. | 3975 |
| 5550-0372 | Whelen Super LED lower level warning light package. Includes (8) 600 LED light heads (7 red1 blue rear facing driver side) and (2) red 500 LED light heads w/chrome flanges. Locate side facing lights: [#LOC]. | 3257 |
| 5550-0373 | Federal Signal QuadraFlare LED lower level warning light package with clear lenses. Includes (8) QL64XFC-R LED light heads with bezels and (2) IMPAXX LED model IPX300-4 light heads. Locate side facing lights: [#LOC]. | 2583 |
| 5550-0374 | Whelen M6 Super LED lower level warning light package. Includes (4) M6RC red LED light heads (2) M9RC red LED light heads (2) M2RC red Super LED light heads & (2) M4RC red light heads. Locate: M4 side facing lights at forward most position M6 side facing lights in wheelwell off set forward & M2 aft side facing lights in rub rail. | 4619 |
| 5550-0377 | Whelen 600 series Super LED lower level warning light package with clear lenses. Includes (9) red LED light heads w/chrome flanges and (1) blue LED light head w/chrome flange. Locate side facing lights: [#LOC]l. | 3447 |
| 5550-0378 | Whelen M6 Super LED lower level warning light package with clear lenses. Includes (6) red M6RC LED light heads (2) split red/clear M6D LED light heads and (2) red TIR3 LED light heads. Locate side facing lights: [#LOC]. | 3518 |
| 5550-0379 | Whelen Super LED lower level warning light package with clear lenses. Includes (6) red/clear M6 split LED light heads (2) red M6 LED light heads and (2) split red/clear Micron LED light heads w/chrome flanges. Locate side facing lights: [#LOC]. | 4475 |
| 5550-0380 | Whelen M series Super LED lower level warning light package. Includes (4) red 600 Super LED light heads (4) red M6V2R LED light heads and (2) red M2R LED light heads. Locate side facing lights: [#LOC]. | 5295 |
| 5550-0381 | Whelen M6 Super LED lower level warning light package. Includes (4) red M6V2R LED light heads (4) red M6 (3R/1B) LED light heads and (2) red M2R LED light heads. Locate side facing lights: [#LOC]. | 5631 |
| 5550-0382 | Whelen M6 Super LED lower level warning light package. Includes (6) red M6RC LED light heads with clear lenses (2) red 600 LED light heads with clear lenses and (2) WIOND split red/clear light heads with clear lenses grommet mounted. Locate side facing lights: [#LOC]. | 3975 |
| 5550-0383 | Whelen M6 Super LED lower level warning light package. Includes (4) red M6V2R LED light heads (4) red M6R LED light heads and (2) red M2R LED light heads. Locate side facing lights: [#LOC]. | 5631 |
| 5550-0384 | Whelen M6 Super LED lower level warning light package. Includes (4) red M6V2R LED light heads (4) red M6R LED light heads and (2) red 5V1R LED light heads. Locate side facing lights: [#LOC]. | 5937 |
| 5550-0385 | Federal Signal QuadraFlare LED lower level warning light package. Includes (6) QL64XF-R LED light heads with bezels (2) QL97XF-R and (2) IMPAXX LED model IPX302-4 light heads. Locate side facing lights: [#LOC]. | 3304 |
| 5550-0386 | Whelen M6 Super LED lower level warning light package. Includes (2) red M6V2R LED light heads (4) split red/clear M6D LED light heads with clear lenses (2) red M6R LED light heads and (2) red M2R LED light heads. See specifications for exact locations. Locate side facing lights: [#LOC]. | 4848 |
| 5550-0387 | Whelen Super LED lower level warning light package. Includes (4) red 600 LED light heads (4) red 6RBR Rota-Beam LED and (2) red TIR6 LED light heads. Locate side facing lights: [#LOC]. | 4468 |
| 5550-0388 | Whelen M6 Super LED lower level warning light package. Includes (6) red M6V2R LED light heads and (4) red M6R LED light heads. Locate side facing lights: [#LOC]. | 6750 |
| 5550-0389 | Whelen M6 Super LED lower level warning light package. Includes (2) red M6V2R LED light heads (6) red M6R LED light heads and (2) red M2R LED light heads. Locate side facing lights: [#LOC]. | 4545 |
| 5550-0390 | Federal Signal QuadraFlare LED lower level warning light package. Includes (8) QL64XF-R LED light heads with bezels and (2) Micro Pulse model MPS1200U-RR LED light heads. Locate side facing lights: [#LOC]. | 2683 |

| Item No. | Description | |
|---|---|---|
| 5550-0391 | Whelen M6 Super LED lower level warning light package. Includes (5) red M6R LED light heads (3) blue M6B light heads and (2) red M2R LED light heads. See specifications for exact locations. Locate side facing lights: [#LOC]. | 3628 |
| 5550-0393 | Whelen Super LED lower level warning light package. Includes (6) red 600 LED light heads. (2) blue 600 LED light heads and (2) red 500 LED light heads w/chrome flanges. Locate side facing lights: [#LOC]. | 3257 |
| 5550-0394 | Whelen M6 Super LED lower level warning light package. Includes (8) red M6RC LED light heads and (2) red 6RBRC Rota-Beam LED with clear lenses. Locate side facing lights: [#LOC]. | 4343 |
| 5550-0395 | Whelen M6 Super LED lower level warning light package. Includes (4) split red/blue M6J LED light heads (2) red M6RC LED light heads (2) blue M6BC LED light head and (2) red M2RC LED light heads with clear lenses. See specifications for exact locations of lighting. Locate side facing lights: [#LOC]. | 4179 |
| 5550-0396 | Whelen M6 Super LED lower level warning light package. Includes (7) red M6R LED light heads (1) blue M6B light head and (2) blue M2B LED light heads. Locate side facing lights: [#LOC]. | 3628 |
| 5550-0397 | Power Arc LED 4/2/2 red/white/blue lower level warning light package with clear lenses. Includes (2) MP13-BW (2) M90DHL (1-WR 1-BW) and (4) M90 (3 red 1 blue). See specifications for exact locations and colors. Locate side facing lights: at forward most position and centered in rear wheel well. | 5530 |
| 5550-0398 | Federal Signal QuadraFlare LED lower level warning light package. Includes (8) QL64XF-R LED light heads (1) QL64XF-B LED light head and (1) QL64XF-A LED light head with bezels. Locate side facing lights: [#LOC]. | 2883 |
| 5550-0399 | Whelen M6 Super LED lower level warning light package with clear lenses. Includes (6) red M6V2RC LED light heads (2) red M6RC LED light heads and (2) red M2RC LED light heads. Locate side facing lights: [#LOC]. | 6169 |
| 5550-0400 | Whelen Super LED lower level warning light package with clear lenses. Includes (8) red/blue 600 split LED light heads and (2) red/blue 500 split LED light heads w/chrome flanges. Locate side facing lights: [#LOC]. | 4096 |
| 5550-0401 | Whelen M6 Super LED lower level warning light package. Includes (8) red M6R LED light heads and (2) red Micron Super LED light heads w/chrome flanges. Locate side facing lights: [#LOC]. | 3628 |
| 5600-0002 | Warning light Whelen 600 series strobe (PR) [#COL]. Requires power pack or option with spare power pack outlets. Includes weatherproof connectors. Requires engineering approval for NFPA applications. Location(s): [#LOC] | 514 |
| 5600-0005 | Warning light Whelen 700 series strobe (PR) [#COL]. Requires power pack or option with spare power pack outlets. Includes weatherproof connectors. Requires engineering approval for NFPA applications. Location(s): [#LOC] | 508 |
| 5600-0008 | Warning light Whelen 900 series strobe (PR) [#COL]. Requires power pack or option with spare power pack outlets. Includes weatherproof connectors. Requires engineering approval for NFPA applications. Location(s): [#LOC] | 514 |
| 5600-0011 | Whelen power supply model UPS64LX 4Place 75Watt strobe. | 663 |
| 5600-0012 | Whelen power supply model ISP148 eight (8) place 140watt strobe. | 1552 |
| 5600-0013 | Whelen power supply model ISP188 eight (8) place 180watt strobe. | 1660 |
| 5600-0016 | Warning light Whelen 500 series LED (PR) amber. Location: [#LOC] Surface mounted with weatherproof connector. Requires engineering approval for NFPA applications. | 504 |
| 5600-0017 | Warning light Whelen 500 series LED (PR) red. Surface mounted with weatherproof connector. Location: [#LOC] | 504 |
| 5600-0018 | Warning light Whelen 500 series LED (PR) blue. Location: [#LOC] Surface mounted with weatherproof connector. Requires engineering approval for NFPA applications. | 866 |
| 5600-0019 | Warning light Whelen 500 series LED (PR) green. Location: [#LOC] Surface mounted with weatherproof connector. Requires engineering approval for NFPA applications. | 1188 |
| 5600-0020 | Warning light Whelen 600 series LED (PR) amber. Location: [#LOC] Surface mounted with weatherproof connector. Requires engineering approval for NFPA applications. | 897 |
| 5600-0021 | Warning light Whelen 600 series LED (PR) red. Surface mounted with weatherproof connector. Location: [#LOC] | 897 |
| 5600-0022 | Warning light Whelen 700 series LED (PR) red. Surface mounted with weatherproof connector. Location: [#LOC] | 784 |
| 5600-0023 | Warning light Whelen 900 series LED (PR) amber. Location: [#LOC] Surface mounted with weatherproof connector. Requires engineering approval for NFPA applications. | 1622 |
| 5600-0024 | Warning light Whelen 900 series LED (PR) red. Surface mounted with weatherproof connector. Location: [#LOC] | 1622 |
| 5600-0025 | Warning light Whelen 600 series halogen (PR) [#COL]. Includes weatherproof connectors. Requires engineering approval for NFPA applications. Location(s): [#LOC] | 416 |
| 5600-0027 | Warning light Whelen 900 series halogen (PR) [#COL]. Includes weatherproof connectors. Requires engineering approval for NFPA applications. Location(s): [#LOC] | 416 |

| Item No. | Description | |
|---|---|---|
| 5600-0029 | Code3 Model 550 rotating (PR) with [#COL] domes. Location: [#LOC]. | 444 |
| 5600-0030 | Code3 Model #550/#41. Includes (2) #550's with red domes and (2) #41 lights with [#COL] lenses. Total four (4) lights at rear upper. Location of Model 550 lights: [#LOC]. | 1143 |
| 5600-0032 | Code3 model #85BZR red LED warning light with chrome bezel (PR). Location: [#LOC] | 1724 |
| 5600-0033 | Whelen beacon with halogen rotator and 700 series strobe (PR) Model B6R with red domes and [#COL] strobes. Location [#LOC]. Requires power pack. | 982 |
| 5600-0034 | Federal model SY12FS Sentry (PR) with [#COL] domes. Location: [#LOC]. | 445 |
| 5600-0036 | Federal model IVP100 Vector pod (PR) with [#COL] domes. Location: [#LOC]. | 530 |
| 5600-0038 | Federal Model IVP200F Vector pod warning light (PR) with [#COL] filters. Location: [#LOC]. | 577 |
| 5600-0041 | Warning light Federal Signal GS2 strobe (PR) [#COL]. Requires power pack or option w/spare power pack outlets. Requires engineering approval for NFPA applications. Location(s): [#LOC]. | 495 |
| 5600-0046 | Warning light Federal Signal GH1F halogen (PR) [#COL]. Location(s): [#LOC] | 372 |
| 5600-0048 | Warning light Federal Signal GL5 LED (PR) red. Location: [#LOC] | 734 |
| 5600-0049 | Warning light Federal Signal GS5 strobe (PR) [#COL]. Requires power pack or option w/spare power pack outlets. Requires engineering approval for NFPA applications. Location(s): [#LOC] | 453 |
| 5600-0051 | Warning light Federal Signal GL5 LED (PR) amber. Location: [#LOC]. | 757 |
| 5600-0052 | Federal Signal SPS4-NFPA (4) place 90 watt strobe power supply. Required when using Federal Signal strobes. | 657 |
| 5600-0053 | Federal Signal SPS8-NFPA (8) place 192 watt strobe power supply. Required when using Federal Signal strobes. | 1169 |
| 5600-0066 | Whelen beacon Model 1200 self contained strobe with [#COL] dome (EA). Location: [#LOC]. | 440 |
| 5600-0067 | Federal Signal Model #100 beacon (PR) with [#COL] domes. Location: [#LOC]. | 567 |
| 5600-0074 | Opticom Emitter 3M #792H. Emitter and control only. Wire through parking brake. Location: [#LOC]. | 3472 |
| 5600-0078 | Whelen Super LED beacon (PR) model L31H with [#COL] domes. Location [#LOC]. | 2144 |
| 5600-0079 | Whelen beacon with halogen rotator and 700 series LED (PR) Model B6TM with red domes and [#COL] LEDs. Location [#LOC]. | 1624 |
| 5600-0080 | Whelen beacon with LED upper beacon and 700 series Super LED (PR) model B6LED with red domes and [#COL] LEDs. Location: [#LOC]. | 3285 |
| 5600-0081 | Code 3 / PSE Oscilaser warning light clear (PR). Lights are to be located on front of cab above quad bezels. | 722 |
| 5600-0083 | Warning light Code3 LXEX1F-R LED (PR). Surfaced mounted with clear lens. Location: [#LOC] | 817 |
| 5600-0086 | Whelen beacon model RB6T (PR) with [#COL] domes. Location: [#LOC]. | 461 |
| 5600-0087 | Warning light Code 3 65BZA LED (PR) amber. Surface mounted with bezel. Location: [#LOC] | 660 |
| 5600-0088 | Warning light Code 3 65BZR LED (PR) Red. Surface mounted with bezel. Location: [#LOC] | 660 |
| 5600-0089 | Warning Light Code3 model #65BZRW split red/clear LED with chrome bezel (PR). Location: [#LOC]. | 866 |
| 5600-0090 | Warning light Federal Signal QuadraFlare QL64XF LED (PR) red. Surface mounted with bezel. Location: [#LOC]. | 697 |
| 5600-0093 | Whelen beacon with halogen rotator and 700 series scene (PR) Model B6TH*Z1P. Dome color: [#COL]. Location [#LOC]. | 1370 |
| 5600-0094 | Warning light Federal Signal QL64XF LED (PR) amber. Surface mounted with bezel. Location: [#LOC]. | 697 |
| 5600-0098 | Warning light Whelen 600 series Super LED (PR) amber. Location: [#LOC]. | 694 |
| 5600-0099 | Warning light Whelen 600 series Super LED (PR) red. Location: [#LOC]. | 694 |
| 5600-0100 | Warning light Whelen 600 series Super LED (PR) blue with clear lens. Location: [#LOC]. | 694 |
| 5600-0101 | Whelen beacon with halogen rotator and 700 series LED (PR) Model B6TM with amber dome on driver side red dome officer side and [#COL] LEDs. Location [#LOC]. | 1624 |
| 5600-0105 | Hazard (door ajar) light 2" LED. Location: [#LOC]. | 41 |
| 5600-0111 | Warning light Whelen 600 series Super LED (PR) white with clear lens. Location: [#LOC]. | 785 |
| 5600-0112 | Warning light Whelen 600 series LED (PR) blue. Surface mounted. Location: [#LOC] | 1030 |
| 5600-0117 | Whelen Ultra Freedom Micro Edge LED (PR) model MCFLED25 clear lens with red LEDs. Location [#LOC]. | 2230 |
| 5600-0118 | Warning light Whelen 500 series TIR6 Super LED (PR) red. Surface mounted 5TSMAC bezel with weatherproof connector. Location: [#LOC]. | 586 |
| 5600-0124 | Warning light Code 3 LXEX1F-R LED (PR) red. Surface mounted with bezel. Location: [#LOC] | 808 |
| 5600-0125 | Code3 model 780 LED flasher. Flasher will control lower level warning lights ipo multiplexing | 1889 |
| 5600-0128 | Warning light Whelen 600 series split Super LED (PR) red/amber. Location: [#LOC] | 899 |
| 5600-0129 | Warning light Whelen 600 series split Super LED (PR) red/clear. Location: [#LOC]. | 968 |
| 5600-0130 | Whelen model UFM8 LED flasher (PR). Flashers will control lower level warning lights ipo internal flashers. Locate (1) in cab and (1) in body. | 1278 |
| 5600-0131 | Light Whelen model PSR00FRR LED (PR) red. Location: [#LOC]. | 442 |
| 5600-0132 | Warning light Federal Signal QL64XF LED (PR). (1) red and (1) green. Location: Red driver and green officer in front quad inboard of NFPA warning light | 930 |
| 5600-0133 | Warning light Whelen 900 series Super LED model 90RR5FRR (PR) red. Location: [#LOC]. | 1363 |

| Item No. | Description | |
|---|---|---|
| 5600-0134 | Warning light Whelen 600 series LED red/clear. Surface mounted with weatherproof connector(PR). Location: [#LOC] | 901 |
| 5600-0137 | Warning light Whelen 700 series Super LED (PR) red/clear. Surface mounted with weatherproof connector. Location: [#LOC] | 913 |
| 5600-0138 | Warning light Whelen LIN3 series Super LED (PR) red with clear lens. Surface mounted RFLANGCD bezel with weatherproof connector. Location: [#LOC] | 437 |
| 5600-0139 | Whelen beacon with LED upper beacon and 700 series Super LED (PR) model B6LED with red LEDs/clear domes and [#COL] LEDs/clear lenses. Location: [#LOC]. | 3285 |
| 5600-0140 | Warning light circuit wiring through chassis reverse. All warning lights. | 89 |
| 5600-0142 | Warning light Whelen 900 series Super LED model 90RA5FCR (PR) split red (bottom) / amber (top) with clear lenses. Location: [#LOC] | 1363 |
| 5600-0143 | Warning lights Whelen 600 series Super LED (PR) red w/clear lens. Location: [#LOC]. | 694 |
| 5600-0144 | Warning light Whelen 500 series TIR6 Super LED (PR) blue. Surface mounted 5TSMAC bezel with weatherproof connector. Location: [#LOC] | 586 |
| 5600-0147 | Warning light Whelen 600 series LED (PR). Red driver blue officer surface mounted with weatherproof connector. Location: [#LOC] | 964 |
| 5600-0153 | Warning light Whelen 600 series split Super LED (PR) red/blue driver red/amber officer. Location: [#LOC]. | 899 |
| 5600-0154 | Warning light Whelen 600 series Super LED (PR). Red driver blue officer surface mounted with weatherproof connector. Location: [#LOC]. | 694 |
| 5600-0156 | Warning light Federal Signal QL64XF LED (PR) green. Surface mounted with bezel. Location: [#LOC]. | 767 |
| 5600-0157 | Federal Model SY12FS Sentry with green dome. Includes switch on driver overhead. Location: pole mounted center rear cab roof. | 451 |
| 5600-0160 | Warning light Federal Signal QL97XF LED (PR) red. Surface mounted with bezel (if applicable). Location: [#LOC]. | 1004 |
| 5600-0161 | Warning light Federal Signal QL97XF LED (PR) amber. Surface mounted with bezel (if applicable). Location: [#LOC] | 1004 |
| 5600-0162 | Warning light Federal Signal QL64XF LED (PR) blue. Surface mounted with bezel. Location: [#LOC]. | 697 |
| 5600-0164 | Warning light Federal Signal QL64XF LED (PR) white. Surface mounted with bezel. Location: [#LOC]. | 807 |
| 5600-0165 | Warning light Whelen 500 series Super Linear LED (PR) green. Location: [#LOC]. | 618 |
| 5600-0166 | Warning light Whelen 600 series Super LED (PR) green. Location: [#LOC]. | 915 |
| 5600-0168 | Fed QuadraFlare QL97SC-RA Red/Amber split color LED lights located on rear of body up high. Red on top on left side and bottom on right side to simulate "X" pattern. Includes external flasher. | 1254 |
| 5600-0169 | Warning light Whelen 900 series Super LED driver side amber / officer side red model 90AA5FAR / 90RR5FRR. Location: [#LOC]. | 1363 |
| 5600-0171 | Warning light Whelen LIN3 series Super LED (PR) amber with clear lens. Surface mounted RFLANGCD bezel with weatherproof connector. Location: [#LOC] | 437 |
| 5600-0172 | Warning light Whelen 900 series Super LED model 90AA5FAR (PR) amber. Location: [#LOC]. | 1363 |
| 5600-0175 | Warning light Whelen 700 series Super LED (PR) red. Location: [#LOC]. | 694 |
| 5600-0177 | Whelen model UFM8 LED flasher (3). Flashers will control warning lights ipo internal flashers. Locate (1) in cab and (2) in body. | 1916 |
| 5600-0178 | Warning light Whelen 400 series TIR Super LED (PR) white. Surface mounted 4TSMAC bezel. Location: [#LOC]. | 703 |
| 5600-0179 | Warning light Whelen 400 series TIR Super LED (PR) Red. Surface mounted 4TSMAC bezel. Location: [#LOC]. | 641 |
| 5600-0181 | Warning light Federal Signal Model 360501 LED w/ bezel (PR). Surfaced mounted with blue driver and red officer lenses. Location: [#LOC]. | 644 |
| 5600-0182 | Whelen beacon with LED upper beacon and 700 series Super LED (PR) Model B6LED with amber domes and [#COL] LEDs. Location [#LOC] | 3285 |
| 5600-0183 | Warning light Whelen 600 series Super LED (PR). blue driver green officer surface mounted with weatherproof connector. Location: [#LOC]. | 806 |
| 5600-0184 | Warning light Federal Signal QL64XF LED (PR). (1) red driver (1) blue officer. Surface mounted with bezel. Location: [#LOC] | 697 |
| 5600-0185 | Federal Model IVP100 Vector pod (PR) located at the rear cab corners. Driver side to be amber with switch on driver's switch panel and automatically turn off when warning lts are on. Officer side to be blue with switch on driver's switch panel. | 886 |
| 5600-0187 | Warning light Federal Signal QL97XF LED (PR). (1) red driver (1) blue officer. Surface mounted with bezel (if applicable). Location: [#LOC]. | 1004 |
| 5600-0189 | Federal Intelli model 650205 LED flasher (PR). Flashers will control lower level warning lights ipo internal flashers. Locate (1) in cab and (1) in body. | 1013 |
| 5600-0190 | Warning light Whelen 600 series Super LED (PR). Blue driver amber officer surface mounted with weatherproof connector. Location: [#LOC]. | 694 |

| Item No. | Description | |
|---|---|---|
| 5600-0191 | Whelen beacon with LED upper beacon and 700 series Super LED (PR) Model B6LED with amber driver and red officer domes and [#COL] LEDs. Location [#LOC]. | 3285 |
| 5600-0192 | Warning light Weldon Diamondback V26W-C00R LED (PR) red w/ clear lenses. Location: [#LOC]. | 537 |
| 5600-0193 | Warning light Weldon Diamondback V46W-C00R LED (PR) red w/ clear lenses. Location: [#LOC]. | 658 |
| 5600-0197 | Warning light Whelen 600 series Super LED (PR). red driver green officer surface mounted with weatherproof connector. Location: [#LOC]. | 806 |
| 5600-0199 | Whelen beacon with LED upper beacon and 700 series Super LED (PR) Model B6LED with red driver and blue officer domes and [#COL] LEDs. Location [#LOC]. | 3285 |
| 5600-0200 | Whelen beacon with LED upper beacon and 700 series Super LED (PR) Model B6LED with red driver and amber officer domes and [#COL] LEDs. Location [#LOC]. | 3285 |
| 5600-0201 | Warning light Whelen 900 series Super LED model 90RB5FCR (PR) split red / blue with clear lense. Location: [#LOC]. | 1363 |
| 5600-0202 | Warning light Weldon Diamondback V46W-C00R LED (PR) red w/ clear lenses. Includes diamond plate mounting box. Location: [#LOC]. | 1061 |
| 5600-0205 | Warning light Federal Signal GL1F-B LED (PR) blue. Location: [#LOC]. | 660 |
| 5600-0213 | Whelen beacon with halogen rotator and 700 series LED (PR) Model B6TM with red dome on driver side amber dome officer side and [#COL] LEDs. Location [#LOC]. | 1624 |
| 5600-0215 | Power Arc (PR) Model LED210 yellow with clear lenses. Location: [#LOC]. | 1438 |
| 5600-0216 | Warning light Whelen M9 series Super LED (PR) red. Location: [#LOC]. | 1571 |
| 5600-0217 | Power Arc (PR) Model LED210 red with clear lenses. Location: [#LOC]. | 1438 |
| 5600-0223 | Warning light Code 3 378ABZ LED (PR) amber. Surface mounted with bezel. Location: [#LOC]. | 785 |
| 5600-0226 | Warning light Federal Signal Model 360501-04 LED w/ bezel (PR). Surfaced mounted with red lens. Location: [#LOC]. | 461 |
| 5600-0227 | Warning light Whelen 600 series Super LED (PR). Red driver blue officer surface mounted with clear lenses and weatherproof connector. Location: [#LOC]. | 694 |
| 5600-0228 | Warning light Whelen 900 series Super LED (PR) with clear lenses. (1) model 90RR5FCR red driver and (1) model 90BB5FCR blue officer. Each light shall have a clear lense w/ colored LEDs. Location: [#LOC]. | 1363 |
| 5600-0229 | Warning light Whelen 500 series TIR6 Super LED (PR) red driver blue officer with clear lenses. Surface mounted 5TSMAC bezel with weatherproof connector. Location: [#LOC] | 586 |
| 5600-0230 | Warning light Whelen 600 series Super LED (PR) blue with blue lens. Location: [#LOC]. | 694 |
| 5600-0236 | Whelen beacon with LED upper beacon and 700 series Super LED (PR) model B6LED with blue driver and red officer domes and [#COL] LEDs. Location: [#LOC]. | 3285 |
| 5600-0237 | Warning light Whelen M7RC Linear Super LED (PR) red with clear lense. Location: [#LOC]. | 771 |
| 5600-0238 | Warning light Whelen 600 series Super LED (PR). (1) red steady burn front driver side below windshield and (1) flashing amber driver side above tail lights to meet California DOT requirements. | 694 |
| 5600-0241 | Warning light Whelen M6R series Linear Super LED (PR) red. Location: [#LOC]. | 793 |
| 5600-0242 | Warning light Whelen M6 series Linear Super LED (PR) split red/amber with clear lens. Location: [#LOC]. | 869 |
| 5600-0243 | Warning light Whelen 500 series split TIR6 Super LED (PR) red/amber. Surface mounted 5TSMAC bezel with weatherproof connector. Location: [#LOC]. | 671 |
| 5600-0245 | Warning light Federal Signal QL64XF LED (PR) red with clear lens. Surface mounted with bezel. Location: [#LOC] | 697 |
| 5600-0248 | Warning light Whelen M9 series Super LED (PR) red driver blue officer with clear lenses. Location: [#LOC]. | 1571 |
| 5600-0249 | Warning light Whelen M6 series Linear Super LED (PR) red driver blue officer with clear lenses. Location: [#LOC]. | 793 |
| 5600-0250 | Whelen beacon with LED upper beacon and 700 series Super LED (PR) Model B6LED with red LED/clear dome driver and blue LED/clear dome officer and [#COL] LEDs/clear lenses. Location: [#LOC]. | 3285 |
| 5600-0251 | 3m Opticom GPS vehicle system kit. Includes antenna radio and control unit. Wired through park brake. | 9557 |
| 5600-0252 | Hazard (door ajar) light Federal Signal Fire Bolt strobe. Location: [#LOC]. | 278 |
| 5600-0253 | Warning light Federal Signal QL97XF LED (PR). (1) red driver (1) amber officer. Surface mounted with bezel (if applicable). Location: [#LOC] | 1004 |
| 5600-0254 | Warning light Federal Signal QL97XF LED (PR). (1) amber driver (1) red officer. Surface mounted with bezel (if applicable). Location: [#LOC] | 1004 |
| 5600-0255 | Warning light Whelen 900 series Super LED driver side red model (90RR5FRR) / officer side amber (90AA5FAR). Location: [#LOC] | 1363 |
| 5600-0256 | Warning light Whelen M-Series Super LED model M9J (PR) red/blue. Surface mounted with weatherproof connector. Location: [#LOC]. | 1571 |
| 5600-0257 | Warning light Whelen M6 series Linear Super LED (PR) split red/blue with clear lens. Location: [#LOC]. | 869 |

| Item No. | Description | |
|---|---|---|
| 5600-0258 | Warning light Whelen M9RC series Super LED (PR) red with clear lens. Location: [#LOC]. | 1332 |
| 5600-0259 | Warning light Whelen M6BC series Linear Super LED (PR) blue with clear lens. Location: [#LOC]. | 793 |
| 5600-0260 | Warning light Weldon Diamondback V46W-C00A LED (PR) amber w/ clear lenses. Location: [#LOC]. | 658 |
| 5600-0264 | Whelen beacon with LED upper beacon and 700 series Super LED (PR) Model B6LED with blue LED/clear dome driver and red LED/clear dome officer and 700 series [#COL] LEDs/clear lenses. Location: [#LOC]. | 3285 |
| 5600-0269 | Whelen Super LED beacon (PR) model L31H with red driver amber officer LED and clear domes. Location [#LOC]. | 2144 |
| 5600-0270 | Warning light Whelen 500 series vetical linear Super LED (PR) red with clear lens. Surface mounted with weatherproof connector. Location: [#LOC]. | 694 |
| 5600-0271 | Warning light Whelen 500 series TIR6 Super LED (PR) red with clear lens. Surface mounted 5TSMAC bezel with weatherproof connector. Location: [#LOC]. | 586 |
| 5600-0272 | Hazard (door ajar) light Federal Signal 2.5" LED model 607120-04. Location: [#LOC]. | 68 |
| 5600-0273 | Warning light Whelen 900 series Super LED (PR). (1) model 90RR5FCR red driver and (1) model 90BB5FCR blue officer. Each light shall have a clear lense w/ colored LEDs. Location: side facing (1) each side upper front body panels and side facing (1) each side upper rear body panels. | 1363 |
| 5600-0274 | Warning light Whelen 900 series Super LED (PR). (1) model 90RR5FCR red driver and (1) model 90BB5FCR blue officer. Each light shall have a clear lense w/ colored LEDs. Location: Rear facing up high on the rear one above each other. | 1363 |
| 5600-0275 | Warning light Whelen M6AC series Linear Super LED (PR) amber with clear lens. Location: [#LOC]. | 793 |
| 5600-0276 | Whelen Ultra Freedom Micro Edge LED (PR) model MCFLED clear lens with amber driver / red officer LEDs. Location [#LOC]. | 2230 |
| 5600-0277 | Warning light Whelen M6C series Linear Super LED (PR) white. Location: [#LOC]. | 793 |
| 5600-0284 | Whelen Super LED beacon (PR) model L31H with blue driver red officer LED and clear domes. Location [#LOC]. | 2144 |
| 5600-0286 | Warning light Whelen M6RC series Super LED (PR) red with clear lens. Location: [#LOC]. | 758 |
| 5600-0289 | Warning light Whelen 900 series Super LED model 90BB5FBR (PR) blue. Location: [#LOC]. | 1363 |
| 5600-0290 | Warning light Whelen 600 series Super LED (PR) red with diamond plate mounting boxes. Location: [#LOC]. | 893 |
| 5600-0292 | Warning light Whelen 900 series Super LED model 90RR5FRC (PR) red w/ clear lens. Location: [#LOC]. | 1363 |
| 5600-0294 | Warning light Federal Signal IMPAXX model IPX600-R red LED w/ bezel (PR). Surfaced mounted with clear lens. Location: [#LOC]. | 536 |
| 5600-0295 | Warning lights Weldon Diamondback V79W-C10A LED amber w/ clear lenses (PR). Location: [#LOC]. | 933 |
| 5600-0296 | Warning light Weldon Diamondback V46W-C LED (PR) red driver amber officer w/ clear lenses. Location: [#LOC]. | 658 |
| 5600-0298 | Warning light Power Arc model M90FK-W LED (PR). Color: White. Location: [#LOC]. | 1148 |
| 5600-0299 | Warning light Federal Signal IMPAXX LED model IPX302-4 w/ bezel (PR). Surfaced mounted with red lens. Location: [#LOC]. | 369 |
| 5600-0300 | Warning lights Weldon Diamondback V79W-C00R LED red w/ clear lenses (PR). Location: [#LOC]. | 933 |
| 5600-0301 | Warning light Whelen M2 Super LED warning lights. Includes (2) red M2R LED light heads w/chrome flanges (if applicable). Location: [#LOC]. | 632 |
| 5600-0302 | Warning light Whelen M2 Super LED warning lights. Includes (2) red M2RC LED light heads with clear lenses and chrome flanges (if applicable). Location: [#LOC]. | 632 |
| 5600-0305 | Warning light Whelen M6 series Linear Super LED (PR) amber driver red officer with clear lenses. Location: [#LOC]. | 793 |
| 5600-0306 | Opticom Emitter 3M 794H. LED emitter and control only. Location and activation: [#LOC]. | 2672 |
| 5600-0307 | Warning light Whelen 600 series LED (PR) with clear lens. Red driver blue officer surface mounted with weatherproof connector. Location: [#LOC] | 964 |
| 5600-0310 | Warning light Whelen M6 series Linear Super LED (PR) split red/clear with clear lens. Location: [#LOC]. | 869 |
| 5600-0311 | Warning light Whelen 900 series Super LED model 90AA5FCR (PR) amber with clear lenses. Location: [#LOC]. | 1363 |
| 5600-0312 | Light Whelen model PSA00FAR LED (PR) amber. Location: [#LOC]. | 442 |
| 5600-0313 | Warning light Whelen 900 series Super LED with clear lens model 90BB5FCR (PR) blue. Location: [#LOC]. | 1363 |
| 5600-0314 | Federal Signal Vision LED rotating beacons model VSLR-IPX-R1R21 with rear facing IPX6 red LED warning light (Requires additional rear facing warning lights for NFPA compliance). Location: [#LOC]. | 2683 |
| 5600-0315 | Whelen Micro Liberty LED (PR) (1) driver Model MCSLED2R clear lense with red LEDs and (1) officer MCSLED2B clear lense with blue LEDs. Location: [#LOC]. | 1878 |
| 5600-0316 | Warning light Whelen M4AC Super-LED lights (PR) amber with clear lenses. Location: [#LOC]. | 1017 |

| Item No. | Description | |
|---|---|---|
| 5600-0317 | Whelen Super LED beacon (PR) model L31H with red driver blue officer LED and clear domes. Location: [#LOC]. | 2144 |
| 5600-0322 | Warning light Whelen M7D series Linear Super LED (PR) split red/clear with clear lens. Location: [#LOC]. | 880 |
| 5600-0328 | Warning light Whelen M7 series Linear Super LED (PR) white light with clear lens. Location: [#LOC]. | 771 |
| 5600-0330 | Warning light Federal Signal IMPAXX model IPX602-R red LED w/ bezel (PR). Surfaced mounted with red lens. Location: [#LOC]. | 536 |
| 5600-0331 | Federal Signal Vision LED rotating beacons model VSLR-R with red LED warning light(s) and red lenses (Requires additional rear facing warning lights for NFPA compliance). Location: [#LOC]. | 2006 |
| 5600-0333 | Warning light Whelen M9 series Super LED (PR) red driver amber officer. Location: [#LOC]. | 1571 |
| 5600-0338 | Warning light Whelen M9 series Super LED (PR) red officer amber driver. Location: [#LOC]. | 1571 |
| 5600-0339 | Warning light Whelen 600 series Super LED (PR). Red officer blue driver surface mounted with weatherproof connector. Location: [#LOC]. | 694 |
| 5600-0340 | Warning light Whelen M6 series Linear Super LED (PR) red driver blue officer. Location: [#LOC]. | 793 |
| 5600-0341 | Warning light Whelen 600 series split Super LED (PR) red/blue with clear lens. Location: [#LOC]. | 899 |
| 5600-0342 | Whelen beacon with LED upper beacon and 700 series Super LED (PR) Model B6LED with blue driver and amber officer domes and [#COL] LEDs. Location [#LOC]. | 3285 |
| 5600-0345 | Warning light Federal Signal IMPAXX LED model IPX300-4 w/ bezel (PR). Surfaced mounted red LEDs with clear lens. Location: [#LOC]. | 369 |
| 5600-0347 | Warning light Whelen 900 series Super LED blue driver amber officer. Location: [#LOC]. | 1363 |
| 5600-0349 | Whelen red TIR3 LED light heads (2). Locate on front cab hood corners one (1) each side. Commerical chassis only. | 332 |
| 5600-0352 | Warning light Whelen M6G series Linear Super LED (PR) green. Location: [#LOC]. | 1018 |
| 5600-0354 | Warning lights Whelen LINZ6 LEDs (PR) red in color with chrome bezels if applicable. Location: [#LOC]. | 529 |
| 5600-0355 | Whelen beacon with LED upper beacon and 700 series Super LED (PR) Model B6LED with blue domes and [#COL] LEDs. Location: [#LOC]. | 3285 |
| 5600-0357 | Warning light Whelen M6 series Linear Super LED (PR) red driver green officer. Location: [#LOC]. | 793 |
| 5600-0358 | Warning light Federal Signal Viper EXT Model VPX802-4 LED w/ bezel rear upper level package. Includes (9) surfaced mounted with red lens; (5) up high rear of body and (2) side facing on each side of body up high and rearward (as applicable). | 2827 |
| 5600-0359 | Warning light Federal Signal IMPAXX LED model IPX302 w/ bezel (PR) (driver blue officer red). Surfaced mounted with colored lens. Location: [#LOC]. | 369 |
| 5600-0360 | Warning light Federal Signal QuadraFlare QL64XF LED (EA) red. Light to be steady burn to meet California DOT requirements. Surface mounted with bezel. Location: [#LOC]. | 312 |
| 5600-0361 | Warning light Whelen M-Series Super LED model M9AC (PR) amber with clear lens. Surface mounted with weatherproof connector. Location: (1) each side above tail lights. | 1332 |
| 5600-0362 | Power Arc beacon (PR) Model LEDB210 with [#COL] domes. Location: [#LOC]. | 1413 |
| 5600-0366 | Warning light Whelen 500 series TIR6 Super LED (2) blue and (3) amber. Surface mounted 5TSMAC bezel with weatherproof connector. Lights to activate when park brake is set in blocking mode. Location: [#LOC]. | 1464 |
| 5600-0367 | Warning light Whelen 600 series Super LED (PR) amber with clear lens. Location: [#LOC]. | 694 |
| 5600-0368 | Warning light Whelen M6A series Linear Super LED (PR) amber. Location: [#LOC]. | 793 |
| 5600-0371 | Whelen Ultra Freedom Micro Edge LED (PR) model MCFLED2RB clear lens with (1) red/(1) blue LEDs. Location: [#LOC]. | 2230 |
| 5600-0372 | Light Code 3 model DB2-2PZNFPA2 (PR) with clear lenses. Located: [#LOC]. | 2238 |
| 5600-0373 | Warning Light Code3 model #65BZCB blue LED with clear lens and chrome bezel (PR). Location: [#LOC]. | 1247 |
| 5600-0374 | Warning light Federal Signal QL64XFC LED (PR) blue with clear lenses. Surface mounted with bezel. Location: [#LOC]. | 697 |
| 5600-0375 | Warning light Federal Signal IMPAXX model IPX600-B blue LED w/ bezel (PR). Surfaced mounted with clear lens. Location: [#LOC]. | 536 |
| 5600-0377 | Federal Signal Vision LED rotating beacons model VSLR-R2A02 with rear facing IPX6 amber LED warning light. Location: [#LOC]. | 2683 |
| 5600-0378 | Warning light Code 3 65BZCR LED (PR) Red with clear lens. Surface mounted with bezel. Location: [#LOC] | 660 |
| 5600-0379 | Warning light Federal Signal QL97XFC-R LED (PR) red with clear lenses. Surface mounted with bezel (if applicable). Location: [#LOC]. | 1004 |
| 5600-0380 | Warning light Federal Signal QL64SFC split LED (PR) driver red/clear officer red/green. Surface mounted with bezel. Location: [#LOC]. | 878 |
| 5600-0381 | Hazard (seat belt warning) blue light 2" LED. Location: Adjacent to door ajar light. | 41 |
| 5600-0383 | Warning light Whelen 900 series Super LED (PR). (1) model 90RR5FRR red driver and (1) model 90BB5FBR blue officer. Location: [#LOC]. | 1363 |

| Item No. | Description | |
|---|---|---|
| 5600-0384 | Tomar model RECT-79-TSMF bezel (PR) for Whelen 900 series lights. Lights to be angled forward. Location: driver and officer gravel shield mounted lights. | 209 |
| 5600-0385 | Whelen Super LED ROTA-BEAM beacon (PR) model R316 Series [#COL] domes. Location [#LOC]. | 2335 |
| 5600-0386 | Warning light Whelen M2 Super LED warning lights. Includes (2) amber M2A LED light heads w/chrome flanges (if applicable). Location: [#LOC]. | 632 |
| 5600-0388 | Hazard (light tower ajar) amber light 2" LED. Location: [#LOC]. | 41 |
| 5600-0389 | Warning light Whelen M4RC Super-LED lights (PR) red with clear lenses. Location: [#LOC]. | 607 |
| 5600-0391 | Warning light Whelen M4R Super-LED lights (PR) red. Location: [#LOC]. | 607 |
| 5600-0392 | Whelen Ultra Freedom Micro Edge LED (PR) model MCFLED2 clear lens with blue driver / red officer LEDs. Location (1) each side of body on rearward compartment top. | 2173 |
| 5600-0393 | Warning light Whelen M6GC series Linear Super LED (PR) green with clear lenses. Location: [#LOC]. | 810 |
| 5600-0395 | Warning light Whelen M-Series Super LED model M9K (PR) red/amber. Surface mounted with weatherproof connector. Location: (1) on each side up high rear of body. | 1571 |
| 5600-0397 | Warning light Whelen WIONA series Super LED amber in color (ea). Locate rear of body below directional lightbar wired through reverse. | 361 |
| 5600-0398 | Warning light Whelen 500 series TIR6 Super LED (PR)1-red driver 1-green officer. Surface mounted 5TSMAC bezel with weatherproof connector. Location: [#LOC]. | 586 |
| 5600-0399 | Warning light Whelen M9 series Super LED (PR) red with diamond plate mounting boxes. Location: [#LOC]. | 1681 |
| 5600-0401 | Warning light Whelen M6B series Linear Super LED (PR) blue. Location: [#LOC]. | 793 |
| 5600-0402 | Warning light Whelen M9 series Super LED (PR) blue driver red officer with clear lenses. Location: [#LOC]. | 1571 |
| 5600-0404 | Whelen beacon with LED upper beacon and 700 series Super LED (PR) Model B6LED with amber LED/clear dome driver and red LED/clear dome officer and [#COL] LEDs/clear lenses. Location: [#LOC]. | 3285 |
| 5600-0405 | Warning light Whelen M9 series Super LED (PR) red with (1) officer side diamond plate mounting box. Location: driver side facing uppper body corner officer rear compartment top outboard. | 1629 |
| 5600-0406 | Warning light Whelen 500 series TIR6 Super LED (2) blue and (3) red. Surface mounted 5TSMAC bezel with weatherproof connector. Lights to activate when park brake is set in blocking mode. Location: [#LOC]. | 1464 |
| 5600-0407 | Whelen Ultra Freedom Micro Edge LED (PR) model MCFLED red lens with red LEDs. Location [#LOC]. | 2230 |
| 5600-0408 | Warning light Federal Signal QL97XF LED (PR) red with diamond plate mounting box. Surface mounted with bezel (if applicable). Location: [#LOC]. | 1201 |
| 5600-0409 | Whelen beacon with LED upper beacon and 700 series Super LED (PR) model B6LED with red domes and 700 series Super LED scene lights rear facing. Location: [#LOC]. | 3466 |
| 5600-0410 | Warning light Whelen 600 series Super LED (PR) red with black flange. Location: [#LOC]. | 694 |
| 5600-0412 | Warning light Federal Signal QL64XF LED (EA) white. Surface mounted with bezel. Location: [#LOC]. | 405 |
| 5600-0413 | Warning light Federal Signal IMPAXX model IPX600-W white LED w/ bezel (PR). Surfaced mounted with clear lens. Location: Front cab corners adjacent to existing fixtures. | 613 |
| 5600-0414 | Warning light Whelen 900 series Super LED (PR). (1) model 90RR5FRR red officer and (1) model 90BB5FBR blue driver. Location: [#LOC]. | 1363 |
| 5600-0415 | Warning/Scene light Whelen M9V2R Super LED (PR) red. Location: [#LOC]. | 2287 |
| 5600-0417 | Enclose bottom of aerial style bracket for no exposed wiring. | 107 |
| 5600-0418 | Warning light Whelen 500 series TIR6 Super LED red. Surface mounted 5TSMAC bezel with weatherproof connector. Light to be steady burn while the parking brake is disengaged. Location: Centered in front cab grill | 341 |
| 5600-0420 | Power Arc (PR) Model LED210 driver blue officer red. Location: [#LOC]. | 1438 |
| 5600-0421 | Whelen beacon with Rota-Beam LED upper beacon and M7 series Super LED (PR) model B63M7 with red domes and [#COL] LEDs. Location: [#LOC]. | 3562 |
| 5600-0422 | Warning light Whelen WIONR series Super LED red in color (PR). Locate [#LOC]. | 644 |
| 5600-0423 | Warning light Whelen Rota-Beam series model 6RBRC Super LED (PR) red with clear lenses. Location: [#LOC]. | 1108 |
| 5600-0424 | Warning light Whelen M6 series Linear Super LED (PR) blue driver red officer with clear lenses. Location: [#LOC]. | 793 |
| 5600-0425 | Code 3 / PSE Oscilaser warning light red (PR). Lights are to be located on front of cab above quad bezels. | 722 |
| 5600-0426 | Warning/Scene light Whelen M9V2 Super LED (PR) red driver blue officer with clear lenses. Location: [#LOC]. | 2287 |
| 5600-0427 | Warning light Whelen M9 series Super LED (PR) blue driver red officer. Location: [#LOC]. | 1571 |
| 5600-0428 | Warning light Whelen 500 series split TIR6 Super LED (PR) red/blue. Surface mounted 5TSMAC bezel with weatherproof connector. Location: [#LOC]. | 671 |

| Item No. | Description | |
|---|---|---|
| 5600-0429 | Warning/Scene light Whelen M9V2 Super LED (PR) red driver blue officer. Location: [#LOC]. | 2287 |
| 5600-0431 | Warning light Whelen 600 series Super LED (PR). Amber driver blue officer surface mounted with weatherproof connector and clear lenses. Location: [#LOC]. | 694 |
| 5600-0432 | Warning light Whelen 600 series Super LED (PR). Red officer blue driver surface mounted with clear lenses and weatherproof connector. Location: [#LOC]. | 694 |
| 5600-0433 | Power Arc (PR) Model LED180 blue. Location: [#LOC]. | 1438 |
| 5600-0435 | Light Whelen PS strip LED (PR) red driver blue officer with clear lenses. Location: [#LOC]. | 617 |
| 5600-0436 | Federal Signal Sentry branch guard (PR). | 180 |
| 5600-0437 | Hazard (door ajar) light Whelen M2WR red LED w/black bezel. Location: [#LOC]. | 316 |
| 5600-0438 | Warning light Whelen 5V1R Super LED (PR) red with chrome flange (as applicable). Surface mounted with weatherproof connector. Location: [#LOC]. | 954 |
| 5600-0439 | Warning light Whelen Rota-Beam series model 6RBB Super LED (PR) blue. Location: [#LOC]. | 1108 |
| 5600-0440 | Warning light Whelen Rota-Beam series model 6RBR Super LED (PR) red. Location: [#LOC]. | 1108 |
| 5600-0441 | Warning light Whelen 500 series TIR6 Super LED (PR) amber. Surface mounted 5TSMAC bezel with weatherproof connector. Location: [#LOC]. | 586 |
| 5600-0442 | Warning light Whelen M9RC series Super LED (PR) red with clear lens and black housing. Location: [#LOC]. | 1332 |
| 5600-0443 | Warning/Scene light Whelen M9V2 Super LED (PR) red driver blue officer. Includes black bezels. Location: [#LOC]. | 2287 |
| 5600-0446 | Warning light Whelen M2 Super LED warning lights. Includes (2) blue M2BC LED light heads (blue LEDs clear lens) w/chrome flanges (if applicable). Location: [#LOC]. | 632 |
| 5600-0447 | Whelen beacon with Rota-Beam LED upper beacon and M7 series Super LED (PR) model B63M7 with red domes/clear lenses and [#COL] LEDs. Location: [#LOC]. | 3562 |
| 5600-0448 | Warning light Whelen Rota-Beam series model 6RB Super LED (PR) driver blue officer red. Location: [#LOC]. | 1108 |
| 5600-0449 | Warning light Whelen WIONK series Super LED split red/amber in color (PR). Locate [#LOC]. | 644 |
| 5600-0450 | Warning light Whelen WIOND series Super LED split red/clear in color (PR). Locate [#LOC]. | 644 |
| 5600-0451 | Warning light Whelen 600 series Super LED. Four (4) red LEDs with smooth plate mounting boxes painted job color (boxes are as required dependent upon location). All four (4) lights shall be activated from a single dash mounted rocker switch. Location: One (1) pair mounted on the cab brow. One (1) pair mounted on or near the corner of the front bumper one (1) each side. | 1948 |
| 5600-0452 | Warning light Federal Signal QL97XF LED (PR). (1) blue driver (1) red officer. Surface mounted with bezel (if applicable). Location: [#LOC]. | 1004 |
| 5600-0453 | Fed QuadraFlare QL97SF-RB Red/Blue split color LED lights. Surface mounted with bezel (if applicable). Location: [#LOC]. | 1254 |
| 5600-0454 | Warning light Whelen 900 series Super LED driver side red model (90RR5FCR) / officer side amber (90AA5FCR) with clear lenses. Location: [#LOC] | 1363 |
| 5600-0455 | Warning light Whelen 900 series Super LED driver side amber model (90AA5FCR) / officer side red (90RR5FCR). Location: [#LOC] | 1363 |
| 5600-0456 | Tomar Scorpion LED beacon (PR) model BCN-CR1 with clear domes. Location: [#LOC]. | 2078 |
| 5600-0458 | Warning light Whelen Vertex Super LED warning lights. Includes (2) split red/clear model VTX609D LED light heads with clear lenses and chrome flanges. Location: [#LOC]. | 591 |
| 5600-0459 | Warning light Whelen M-Series Super LED model M9K (PR) red/amber. Surface mounted with weatherproof connector. Location: [#LOC]. | 1571 |
| 5600-0461 | Warning light Whelen WIONSM series Super LED driver split red/green officer split red/amber in color (PR). Locate (1) each side rear facing centered between DOT lights and corner in rubrail if equipped. | 647 |
| 5600-0462 | Warning light Whelen M6 series Linear Super LED (PR) red driver green officer with clear lenses. Location: [#LOC]. | 793 |
| 5600-0463 | Warning light Federal Signal Viper EXT model VPX800-4 red LED w/ bezel (PR). Surfaced mounted with clear lens. Location: [#LOC]. | 630 |
| 5600-0464 | Warning light Power Arc model M90 LED (PR). Color: Red. Location: [#LOC]. | 1148 |
| 5600-0465 | Warning light Whelen M9BC series Super LED (PR) blue with clear lens. Location: [#LOC]. | 1332 |
| 5600-0467 | Whelen beacon with LED upper beacon and M7 series Super LED (PR) model B6LED with driver amber officer red domes and [#COL] LEDs. Location: [#LOC]. | 3359 |
| 5600-0468 | Warning/ground light Whelen M6V2RC series Linear Super LED (PR) red with clear lenses. Location: [#LOC]. | 1649 |
| 5600-0470 | Whelen beacon with Rota-Beam LED upper beacon and 700 series Super LED (PR) model B6370 with red domes and [#COL] LEDs. Location: [#LOC]. | 3486 |
| 5600-0471 | Diamond plate shield above officer side rear beacon. | 253 |
| 5600-0472 | Federal Signal Vision LED rotating beacons model VSLR with driver red LED warning light and officer amber LED warning light. (Requires additional rear facing warning lights for NFPA compliance). Location: [#LOC]. | 2006 |
| 5600-0473 | Warning light Whelen WIONL series Super LED split red/green in color (PR). Locate [#LOC]. | 736 |

| Item No. | Description | |
|---|---|---|
| 5600-0474 | Hazard (door ajar) light Whelen 700 series Super LED (PR) w/chrome bezel. Driver doors red officer doors amber. Location: AC cover. | 694 |
| 5600-0475 | Warning light Whelen WIONSMCR series Super LED red. Location: [#LOC]. | 644 |
| 5600-0477 | Light Whelen model PSB00FBR LED (PR) blue. Location: [#LOC]. | 732 |
| 5600-0478 | Warning light Whelen M4D Super-LED lights (PR) red-clear split lenses. Location: [#LOC]. | 783 |
| 5600-0481 | Code3 Arch model A36 [#COL] LED beacon (PR). Location: [#LOC]. | 2622 |
| 5600-0483 | Code3 Arch model A36 [#COL] LED beacon (PR). Location: [#LOC]. | 2622 |
| 5600-0484 | Warning light Power Arc model M90SM LED (PR). Color: [#COL] . Location: [#LOC]. | 1254 |
| 5600-0485 | Warning light Federal Signal QL64SFC split LED (PR) red/blue. Surface mounted with bezel. Location: [#LOC]. | 694 |
| 5600-0486 | Warning light Whelen 500 series TIR6 Super LED (2) amber and (3) red. Surface mounted 5TSMAC bezel with weatherproof connector. Lights to activate when park brake is set in blocking mode. Location: rear of body below hosebed. | 1464 |
| 5600-0488 | Warning/Scene light Whelen M9V2RC Super LED (PR) red with clear lenses. Location: [#LOC]. | 2287 |
| 5600-0490 | Warning light Whelen M9RC series Super LED (PR) red with clear lenses and diamond plate mounting boxes. Location: [#LOC]. | 1681 |
| 5600-0491 | Warning light Whelen Micron Super LED (PR) split red/clear. Surface mounted chrome bezel with weatherproof connector. Location: [#LOC]. | 623 |
| 5600-0492 | Warning light Whelen Micron Super LED (PR) split red/amber. Surface mounted chrome bezel with weatherproof connector. Location: [#LOC]. | 623 |
| 5600-0495 | Warning light Whelen 600 series Super LED (PR). Red driver amber officer surface mounted with weatherproof connector. Location: [#LOC]. | 694 |
| 5600-0496 | Warning light Whelen M9 series Super LED (PR) red driver blue officer. Location: [#LOC]. | 1571 |
| 5600-0497 | Diamond plate warning/scene light mounting box full compartment top depth (PR). Location: [#LOC]. | 470 |
| 5600-0498 | Painted smooth plate warning/scene light mounting box (two-tone if equipped). Location: [#LOC]. | 470 |
| 5600-0499 | Warning/ground and/or scene light Whelen M6V2R series Linear Super LED (PR) red. Location: [#LOC]. | 1649 |
| 5600-0500 | Warning light Whelen M6 series Super LED (PR) red/amber driver red/blue officer. Surface mounted with weatherproof connector. Location: [#LOC]. | 869 |
| 5600-0501 | Federal 10" Navigator LED beacons (PR) clear lenses with (2) red (1) red/amber LED reflectors. Location: [#LOC]. | 2240 |
| 5600-0502 | Warning light Federal Signal Micro Pulse model MPS1200U-RR red LED w/ bezel (PR). Location: [#LOC]. | 523 |
| 5600-0503 | Light Whelen PS strip LED (PR) blue driver red officer with clear lenses. Location: [#LOC]. | 617 |
| 5600-0504 | Warning/ground light Whelen M6V2 series Linear Super LED (4); (2) red (2) amber alternating. Wired through lower level warning scene lights wired through park brake and reverse. Location: center rear of body above B1. | 3298 |
| 5600-0505 | Hazard (park brake set) light 2" amber LED. Location: [#LOC]. | 41 |
| 5600-0506 | Warning light Whelen M9 series Super LED (PR) red officer amber driver with clear lenses. Location: [#LOC]. | 1571 |
| 5600-0507 | Light Whelen model PSB00FCR LED (PR) blue with clear lens. Location: [#LOC]. | 732 |
| 5600-0509 | Warning light Whelen M2 Super LED warning lights. Includes (2) blue M2B LED light heads w/chrome flanges (if applicable). Location: [#LOC]. | 632 |
| 5600-0510 | Warning light Whelen Rota-Beam series model 6RB Super LED (PR) with clear lenses; driver blue officer red. Location: [#LOC]. | 1108 |
| 5600-0511 | Federal Signal Vision LED rotating beacons model VSLR with driver red dome/rear facing IPX6 and officer amber dome/ rear facing IPX6 LED warning lights. Location: [#LOC]. | 2683 |
| 5600-0512 | Warning light Whelen M6 series Linear Super LED (PR) red driver amber officer. Location: [#LOC]. | 793 |
| 5600-0514 | Warning light Whelen M-Series Super LED model M9M (PR) blue/amber with clear lenses. Surface mounted with weatherproof connector. Location: [#LOC]. | 1571 |
| 5600-0516 | Federal NVG10 Navigator LED warning light (PR) with [#COL] lenses. Location: [#LOC]. | 1776 |
| 5600-0517 | Federal NVG10 Navigator LED warning light (PR) with clear lenses and [#COL] LED reflectors. Location: [#LOC]. | 1776 |
| 5600-0518 | Power Arc (PR) Model LED210 blue with clear lenses. Location: [#LOC]. | 1438 |
| 5600-0519 | Power Arc (PR) Model LED210 driver red officer blue with clear lenses. Location: [#LOC]. | 1438 |
| 5600-0520 | Power Arc (PR) Model LED180 red with clear lenses. Location: [#LOC]. | 1438 |
| 5600-0521 | Warning light Power Arc model M90FK-RC LED (PR). Color: Red with clear lens. Location: [#LOC]. | 1148 |
| 5600-0522 | Warning light Whelen Rota-Beam series model 6RB Super LED (PR) driver red officer blue. Location: [#LOC]. | 1108 |
| 5600-0524 | Power Arc warning light LED (PR) Model P14SM. Color: Red with clear lenses. Location: [#LOC]. | 1064 |
| 5600-0525 | Power Arc warning light LED (PR) Model P14SM. Color: Blue with clear lenses. Location: [#LOC]. | 1064 |
| 5600-0526 | Warning light Federal Signal QL64XF LED (PR) red with diamond plate mounting boxes. Location: [#LOC]. | 896 |

| Item No. | Description | |
|---|---|---|
| 5600-0527 | Warning light Whelen M6 series Linear Super LED (PR) blue driver red officer. Location: [#LOC]. | 793 |
| 5600-0528 | Power Arc warning light LED (PR) Model P14SM with diamond plate box. Color: (1) red (1) blue with clear lenses. Location: red officer side upper forward body corner blue officer side upper rearward body corner. | 1238 |
| 5600-0529 | Power Arc warning light LED (PR) Model P6NT. Color: Red driver blue officer with clear lenses. Location: [#LOC]. | 767 |
| 5600-0530 | Power Arc warning light LED (PR) Model P6NT-BC. Color: Blue with clear lenses. Location:[#LOC]. | 767 |
| 5600-0532 | Warning light Whelen M6RC series Super LED (PR) red with clear lens and diamond plate mounting box. Location: [#LOC]. | 931 |
| 5600-0533 | Warning light Whelen Rota-Beam series model 6RBRC Super LED (PR) red with clear lenses and diamond plate mounting boxes. Location: [#LOC]. | 1282 |
| 5600-0534 | Warning light Whelen 500 series split TIR6 Super LED (PR) blue/amber driver red/amber officer. Surface mounted 5TSMAC bezel with weatherproof connector. Location: [#LOC]. | 671 |
| 5600-0535 | Warning light Whelen 900 series split Super LED (PR) driver red/amber oifficer blue/amber with clear lenses. Location: [#LOC] | 1363 |
| 5600-0536 | Federal Signal Vision LED rotating beacons model VSLR with blue driver red officer LED warning light(s) (Requires additional rear facing warning lights for NFPA compliance). Location: [#LOC]. | 2006 |
| 6300-0094 | Monitor Akron 3483 Manual with 5160 nozzle. | 6978 |
| **MISCELLANEOUS EQUIPMENT** | | |
| 7000-0003 | Akron Brass stacked tips w/stream shaper. Stream Shaper 3485 & Stacked Tips style 3499. | 699 |
| 7200-0101 | Adapter 2.5FNST x 2.5M British Columbia Threads (BCT 3.00x8Tip) with Cap. | 210 |
| 7200-0102 | Adapter 2.5MNST x 2.5F Swivel British Columbia Threads (BCT 3.00x8TPI) with Plug | 417 |
| 7200-0111 | Adapter 2.5" female NST x 2.5" male Cleveland 3.078 x 8TPI with cap. | 212 |
| 7200-0112 | Adapter 2.5MNST x 2.5F Swivel (Cleveland 3.078 x 8TPI) with Plug | 435 |
| 7200-0116 | Adapter 2.5FNST x 2.5M Alberta Mutual Aid Threads (AMA 2.99x8Tip) | 128 |
| 7200-0120 | Adapter 4" FNST X 3.5" MNST Chrome with cap. | 393 |
| 7500-0001 | Ziamatic Air Pack Bracket (FPHS) Model #UN-6-30-3-FPHS. Shipped loose. | 359 |
| 7500-0002 | Universal air pack bottle bracket (EA). Shipped loose. | 173 |
| 7500-0004 | Bracket SCBA Lifeguard SmartDock Gen2 restraint system. Ship Loose. | 559 |
| 7550-0000 | ABC Extinguisher 10# w/Bracket. | 189 |
| 7550-0003 | Extinguisher ABC 20# dry chemical w/bracket. Amerex model A411 | 277 |
| 7550-0004 | Extinguisher 2.5 Gallon Water Pressure w/Bracket. Amerex model A240 | 220 |
| 7550-0006 | ABC Extinguisher 20# ABC w/Bracket. Mount bracket to floor just inside the interior on the officer's side rear of 30# extinguisher. | 195 |
| 7550-0007 | Amerex Extinguisher 30# DryChem w/Bracket. Mount bracket to floor just inside the interior on the officer's side forward of 20# extinguisher. | 754 |
| 7600-0005 | Pike Pole Fiberglass 6'. | 159 |
| 7600-0006 | Pike Pole Fiberglass 8'. | 105 |
| 7600-0007 | Pike Pole Fiberglass 10'. | 201 |
| 7600-0008 | Pike Pole Fiberglass 12'. | 212 |
| 7600-0015 | Wheel Chocks 32" NFPA Compliant - Pair of Zico AC-32. Up to 32" diameter Tires. Includes mounting bracket. | 530 |
| 7600-0016 | Wheel chocks 44" NFPA compliant pair (PR) of Zico SAC-44. Up to 44" diameter tires. Includes mounting brackets. | 597 |
| 7600-0037 | Wheel Chocks Aluminum Zico AC-32 with mounting brackets. | 324 |
| 7600-0111 | Pike Pole 12 Ft. Akron PP-12 with USA standard hook. | 197 |
| 7600-0112 | Pike Pole 8 Ft. Akron PP-8 with USA standard hook. | 165 |
| 7600-0113 | Pike Pole 6 Ft. Akron PP-6 with USA standard hook. | 152 |
| 7600-0116 | Pike Pole Fiberglass 6 Ft w/ D-Handle. | 123 |
| 7600-0117 | Pike Pole Fiberglass 12 Ft w/ D-Handle. | 152 |
| 7600-0118 | Pike Pole Fiberglass 4 Ft w/ D-Handle. | 117 |
| 7700-0023 | Booster Hose 100' x 1" Reeltex (Each) Niedner Reeltex fabric booster hose with couplings. | 782 |
| 7700-0064 | Booster Hose 100' x 1.5" Reeltex (Each) Niedner Reeltex fabric booster hose with couplings. | 802 |
| 7700-0097 | Soft Suction Hose 20ft 5" with 4.5" long handle female coupler on one end and a 4.5" long handle male coupler on the other end. | 1788 |
| 7700-0104 | Booster Hose 100' x 1" Niedner Hotstop fabric booster hose with couplings. | 708 |
| 7700-0108 | Hose booster rubber 1" X100' Red in color with couplings Darley part number AC696. | 731 |
| 7700-0118 | Akron Brass stacked tips w/stream shaper. Base style 3485 & Stacked Tips style 2499. | 697 |
| 7700-0119 | Soft Suction Hose 20ft 5" with 6" long handle female swivel coupler on one end and a 4.5" long handle female swivel coupler on the other end. | 1787 |
| 7800-0003 | 10' folding Duo-Safety 585-A ladder. | 458 |
| 7800-0008 | 14' roof ladder Duo-Safety 775-A. | 689 |
| 7800-0009 | Duo-Safety 16' 875-A roof ladder. | 532 |

| Item No. | Description | |
|---|---|---|
| 7800-0018 | Extension ladder Duo-Safety 900-A 24' 2-section. | 1094 |
| 7800-0033 | Duo-Safety 20' 2-section extension ladder 900-A. | 1112 |
| 7800-0041 | Duo-Safety 1200-A 28' 2-section extension ladder. | 1342 |
| 7800-0044 | Alco-Lite PEL-12 Extension Ladder | 686 |
| 7800-0045 | Duo-Safety 1200-A 35' 2 Section Extension Ladder | 1686 |
| 7800-0046 | Duo-Safety 300-A 13' combination ladder. | 607 |
| 7800-0047 | Duo-Safety 925-A 26' 3-section extension ladder. | 1215 |
| 7800-0076 | Duo-Safety 1200-A 35' 2 Section Extension Ladder. Special custom length ladder 1" shorter than standard in closed position. | 1686 |
| 7800-0077 | Duo-Safety 925-A 22' 3 Section Extension Ladder | 1190 |
| 7800-0085 | 14' roof ladder Duo-Safety 775-DR. Includes folding steel roof hooks on both ends with prong feet. | 727 |
| 7800-0088 | 10' roof ladder Duo-Safety 775-DR. Includes folding steel roof hooks on both ends with prong feet. | 641 |
| 7800-0089 | Duo-Safety 16' roof ladder 875-DR. Includes folding steel roof hooks on both ends with prong feet. | 830 |
| 7800-0091 | 8' folding Duo-Safety 585-A ladder. | 346 |
| 7800-0095 | Duo-Safety 20' roof ladder 875-DR. Includes folding steel roof hooks on both ends with prong feet. | 960 |
| 7800-0098 | Duo-Safety 14'-28' 1275-FR Folding Roof Ladder. | 1206 |
| 7900-0014 | DOT Required Drive Away Kit - Kit includes three (3) triangular warning reflectors with carrying case. This kit is for the end user and is to remain with the truck. | 34 |
| 7900-0046 | Goodyear front spare tire assembly with aluminum wheel to match front tire / wheel specification. | 2312 |
| 7900-0047 | Goodyear rear spare tire assembly with aluminum wheel to match rear tire / wheel specification. | 1999 |
| 7900-0048 | Michelin front spare tire assembly with aluminum wheel to match front tire / wheel specification. | 2097 |
| 7900-0049 | Michelin rear spare tire assembly with aluminum wheel to match rear tire / wheel specification. | 1874 |
| 7900-0051 | Goodyear rear spare tire assembly with steel wheel to match rear tire specification. | 1353 |
| 7900-0052 | Michelin front spare tire assembly with steel wheel to match front tire specification. | 1582 |
| 7900-0053 | Michelin rear spare tire assembly with steel wheel to match rear tire specification. | 1212 |
| 7900-0054 | Handheld Flashlight Orange Streamlight Survivor LED flashlight with holder and AC/DC charger. Ship loose. | 193 |
| 7900-0061 | Firecom UH-10 headset. | 504 |
| 7900-0062 | Firecom UH-10S headset. | 504 |
| 7900-0063 | Firecom UH-20 headset. | 504 |
| 7900-0066 | Shoreline extension cord 50' of 12/3 black. (1) end 20A male household (1) end 20A female auto eject. | 217 |
| 7900-0100 | A 9000 lb Warn multi-mount (portable) electric reversible winch with 125' of 5/16'' galvanized aircraft type cable and a replaceable clevis hook shall be installed and shall be controlled with a 12' remote control switch. | 2050 |
| 7900-0102 | Manual cord reel for 200' of 10/3 wire and a 20amp twist lock connection. | 814 |
| 7900-0103 | 50 foot extension cord with Battery charger recept on one end. | 188 |
| 7900-0104 | Ramsey QM8000 8000 lb portable winch | 1786 |
| 7900-0107 | Ship spare tire(s) via common carrier to customer location. | 173 |
| 7900-0108 | Quartz light MagnaFire 750W/120V model KR-SB-836-TM-I with external mount tripod telepole. Shipped loose. | 1412 |
| 7900-0120 | HeartStart OnSite Automated External Defibrillator. Unmounted. | 2356 |
| 7900-0145 | Aluminum box 8"W x 18"L x 6"H ship loose. | 545 |
| 7900-0146 | Aluminum tool box size 6 wide x 18 long x 4 high and Ship Loose. | 545 |
| 7900-0148 | Air Force contact information. Information to be provided at final. Tag will be put on during customer inspection. | 80 |
| 7900-0151 | Shoreline extension cord 50' of 12/3 black. (1) end 20A male household (1) end 20A female auto eject. | 217 |
| 7900-0155 | Junkin model JSA-300PCW stokes basket. Ship loose. | 881 |
| 7900-0156 | Multiplex adapter kit. Includes 6' harness with 9 pin plug/Deutsch ends and a USB to CAN interface module. | 339 |
| 7900-0157 | Junction box Circle-D with four (4) 3-wire NEMA L5-20 110 volt 20 amp twist lock receptacles. Includes 3' pig tail with 20A TL connector. | 835 |
| 7900-0158 | Junction box Circle-D with (2) 15 amp straight blade and (2) 20 amp twist lock receptacles. Includes 3' pig tail with 20 amp twist lock connector. | 1055 |
| 7900-0159 | Junction box Circle-D with (2) 15 amp straight blade and (2) 20 amp twist lock receptacles. Includes 20 amp twist lock inlet connector. | 1055 |

| Item No. | Description | |
|---|---|---|
| 7900-0160 | Aluminum tool box 13.5W x 12"H x 23.5"D and be located in L5 on shelves forward of the partition. | 789 |
| 7900-0167 | Junction box Circle-D with (1) 20 amp straight blade and (3) 20 amp twist lock receptacles. Includes 3' pig tail with 20 amp twist lock connector. | 1055 |
| 7900-0170 | Zico helmet holder model UHH-1 (EA). Ship loose. | 70 |
| 7900-0172 | 28" orange traffic cone with (2) reflective stripes. | 64 |
| 7900-0173 | Junction box Woodhead with four (4) NEMA L5-15 110 Volt 15 Amp twist lock receptacles. Includes 12" pig tail with 20A TL connector. | 1660 |
| 7900-0176 | Poly box to be located: 2 on forward upper shelf and 2 on forward lower shelf in R2. | 1470 |
| 7900-0178 | Generator Honda 2KW model EU2000iA with 1.6KW continuous output. Shipped loose. | 1780 |
| 7900-0179 | Akron Apollo (3416) Ground Mount and truck mounting flange Pyrolite stream shaperand stacked tips base to have single 4" FNST inlet. | 4255 |
| 7900-0180 | Cascade model CT-PSS1 one piece tapered stainless steel Pro Series stokes basket. Ship loose. | 1431 |
| 7900-0193 | Junction box Circle-D 3-wire 110V with (2) 20 amp straight blade and (2) 30 amp twist lock receptacles. Includes 12" pig tail with 30 amp twist lock connector. | 1055 |
| 7900-0198 | (2) .090 blank aluminum licenses plates. Ship loose. | 306 |
| 7900-0200 | (2) hitch receiver mount tow eyes constructed of forged steel 2-1/2 inch ID 5 inch OD on the ring with black powder coat finish. (2) 3/4" hitch pin assemblies shall also be provided and all items shall be shipped loose. | 176 |
| 7900-0203 | Junction box Circle-D with (3) NEMA 5-20 120V GFCI duplex and (1) NEMA L6-20 220V twist lock receptacle. Includes 3' pig tail with L14-30P TL connector. Shipped loose. | 1055 |
| 7900-0206 | Junction box Akron with (4) 5-15 120v 15 Amp duplex recepts. Includes 12" pigtail with Hubbel L5-20 connector. Ship loose. | 771 |
| 7900-0217 | Wheel Chocks 32" NFPA Compliant - Pair of Zico AC-32. Up to 32" diameter tires. | 324 |
| 7900-0218 | Wheel chocks 44" NFPA complaint pair (PR) of Zico SAC-44. Up to 44" diameter tires. | 686 |
| 7900-0226 | Junction box Akron with four (4) 3-wire Nema L5-20 110Volt 20 Amp twist lock receptacles. Includes 12" pigtail with L5-20 connector. Ship loose. | 771 |
| 7900-0228 | V-MUX Electrical system diagnostic kit. | 977 |
| 7900-0237 | Junction box with 2' pigtail. Daniel Woodhead with two (2) NEMA L5-20 110V 20A twist lock and two (2) NEMA 5-20 110V 20A duplex receptacles. Includes 2' pigtail wired direct with a male L5-20 plug. Shipped loose. | 1564 |
| 7900-0239 | Poly box approx. 11in. Wide x 6in. High x 18in. Deep to be located on the lowest mounting surface of [#LOC]. | 661 |
| 7900-0240 | Junction box Akron with two (2) 5-20 120v 20 Amp straight blade duplex receptacles and two (2) L5-20 120v 20 Amp twist lock receptacles. Each receptacle shall be equipped with individual 20A breakers a spring-loaded snap cover and marked in white lettering with that receptacles voltage and ampere rating. All electrical receptacles plugs and snap type weatherproof covers shall be UL Listed components. 12" Pigtail that includes wire mesh cord grip with a L14-20 connector. Ship loose. | 771 |
| 7900-0242 | Junction box Circle-D with four (4) 3-wire Nema 5-20 110Volt 20 Amp duplex household receptacles. Includes 3' pig tail with 20A TL connector. | 835 |
| 7900-0245 | Junction box Circle-D with three (3) L5-20 120v 20 Amp twist lock receptacles and one (1) 5-20 120v 20 Amp straight blade duplex receptacle. A Circle-D model PF51G four outlet electrical junction box shall be provided and shall have an integral pilot light to indicate electrical current. Each receptacle shall be equipped with individual 20A breakers. 12" Pigtail with a L14-20 4 wire connector. Ship loose. | 1055 |
| 7900-0253 | Junction box Circle-D with (2) 3-wire NEMA L5-20 110V 20A twist lock receptacles and (2) 3-wire NEMA 5-20 110V 20A household receptacles. Includes 3' pig tail with 20A TL connector. | 835 |
| 7900-0257 | Soft Suction Hose 15ft 6" with 6" long handle female swivel coupler on one end and a 4.5" long handle female swivel coupler on the other end. | 1443 |
| 7900-0258 | Spotlight Optronics Blue Eye model KB4003 hand held. Ship loose. | 262 |
| 7900-0260 | Junction box Circle-D with (2) 15 amp straight blade and (2) 15 amp twist lock receptacles. Includes 3' pig tail with 20 amp twist lock connector. | 1055 |
| 7900-0261 | Shoreline extension cord 50' of 10/3 black. (1) end 30A NEMA 5-30P (1) end 30A NEMA 5-30R. | 363 |
| 7900-0264 | Poly box with approx size 6" W x 10" T x 69" D to be located on the lowest mounting surface of [#LOC]. | 370 |
| 7900-0265 | 2100 Gallon Aluminum frame portable folding tank. FDTA 2100 H2 alum w/22 oz. sides and 32 oz. Ship with unit stored in storage tank rack. Color to be yellow. | 1949 |
| 7900-0271 | Poly box (ea) .5 in. thk. approx. 10 in. Wide x 8 in. Tall x 24 in. Long. includes grab cutouts at each end. Color: Black. :Locate: R2 floor. | 370 |
| 7900-0273 | Junction box Circle-D with four (4) 3-wire NEMA L5-15 110 volt 15 amp twist lock receptacles. Includes 12" pig tail with 15A TL connector. | 835 |
| 7900-0274 | Junction box Circle-D with (2) 20 amp straight blade and (2) 20 amp twist lock receptacles. Includes 12" pig tail with 20 amp Daniel Woodhead twist lock connector. | 1055 |
| 7900-0277 | Wheel chocks 44" NFPA compliant pair (PR) of Zico AC-44. Up to 44" diameter tires. | 597 |

| Item No. | Description | |
|---|---|---|
| 7900-0280 | Poly box black .5" thick. Includes carry hand hold each end. Approx size 8.75" W x 12" T x 20" D to be located on the lowest mounting surface of L1. | 334 |
| 7900-0281 | Poly box black .5" thick. Includes carry hand hold each end. Approx size 12.5" W x 12" T x 24" D to be located on the lowest mounting surface of R1. | 370 |
| 7900-0282 | Poly box black .5" thick. Includes carry hand hold each end. Approx size 6" W x 12" T x 24" D Locate: R4. | 355 |
| 7900-0285 | Junkin model JSA-200 stokes basket. Ship loose. | 1076 |
| 7900-0287 | Speedlay removable poly speedlay double stack tray(s). Tray to accommodate 150 feet of 2-1/2 in. hose. The floor of the tray(s) to be slotted to prevent the accumulation of water and allow for ventilation of wet hose. Locate: L1/R1. | 618 |
| 7900-0288 | Junction box Circle-D with (4) 3-wire NEMA 5-15 110V 15A household receptacles. Includes 3' pig tail with 20A straight blade connector. | 835 |
| 7900-0292 | Floor mounted Slide Master with tray. Model SMEX w/ 120% extension. 1/2 depth transverse or full depth on non transverse. Design for mounting in compartment L4 to be shipped loose with truck. | 1861 |
| 7900-0293 | Sight Level Tube for Water Tank Level. | 72 |
| 7900-0298 | Junction box Akron with (2) 5-20 125v 20 Amp duplex recepts and (2) L5-20 125v 20 Amp twist lock recepts. Includes 12" pigtail with Daniel Woodhead L5-20 connector and rubber feet. Shipped loose. | 658 |
| 7900-0299 | TFT Crossfire model XFT-NJ monitor with master stream 1250 nozzle. Include truck mount adapter. | 5176 |
| 7900-0300 | Additional pump panel tags to be install at pickup. | 215 |
| **PAINTING, STRIPING, LETTERING** | | |
| 8100-0071 | Undercoating E-ONE. | 335 |
| 8100-0096 | Paint rear tow eye assemblies job color IPO black. | 317 |
| 8100-0100 | Special paint break. See sketch / drawing / photo in sales file. | 220 |
| 8100-0108 | Front wheels to be painted on the inboard side (same color as outboard side). | 359 |
| 8100-0109 | Rear wheels (4) to be painted on the inboard side (same color as outboard side). Includes outboard side of the inboard wheels. | 717 |
| 8100-0117 | Paint cab/body with approved metallic paint color. | 3151 |
| 8100-0170 | Painted Stripe - 6" wide with "Z". Stripe straight on front sides and rear of cab and body. "Z" location to be specified by customer. Color: [#COL]. Location: [#LOC]. | 5130 |
| 8100-0171 | Paint Commercial Cab Special - DuPont Paint: Color: [#COL]. | 5720 |
| 8100-0172 | Paint body two tone color. Paint break will be just above door drip rail. DuPont paint. Color: [#COL]. | 2211 |
| 8100-0177 | Paint cab Sikkens two-tone. Upper area of cab to be painted [#COL]. | 1437 |
| 8100-0178 | Paint Commercial Cab Special - Sikkens Paint: Color: [#COL]. | 5337 |
| 8100-0180 | Paint 2-Tone Special Commercial Chassis Cab - Sikkens Paint. | 2849 |
| 8100-0181 | Paint body two-tone color - Sikkens paint: Color: [#COL]. | 2211 |
| 8100-0182 | Paint Body - Small - For Pumpers Rear Mounts S/A Tankers/Wetsides and Rescues. Sikkens paint. Color: [#COL]. | 1964 |
| 8100-0183 | Paint Body - Large - For Aerials T/A Tankers/Wetsides Rear Mounts and Rescues. Sikkens paint. Color: [#COL]. | 4863 |
| 8100-0184 | Paint body stainless steel -Small. Sikkens paint. Color: [#COL]. | 5973 |
| 8100-0353 | FRP painted exterior panels IPO standard paint process for stainless steel bodies. Available only on stainless steel rescue bodies that have rollup doors. Provides a credit versus the standard painting process. Sikkens paint. Color [#COL]. | -4227 |
| 8100-0362 | Paint body two tone color. Paint break will be just above the body compartment top. Sikkens paint. Color: [#COL]. | 2211 |
| 8100-0372 | Paint cab two-tone with approved metallic flake paint color. | 789 |
| 8100-0388 | Chassis fuel tank to have undercoating applied prior to installation on frame. | 234 |
| 8100-0394 | Paint body two-tone color. Paint break will be just above the body compartment opening. Sikkens paint. Color: [#COL]. | 2211 |
| 8100-0449 | Rear inboard wheels (2) to be painted on the outboard side (same color as outer wheels). Allowing for wheels to be rotated on the rear axle. | 358 |
| 8100-0457 | Paint body two-tone color - Sikkens paint. Locate at the bottom of roll-up door header. Color: [#COL]. | 2211 |
| 8100-0458 | Special paint break body two-tone color - Sikkens paint: Color: [#COL]. See sketch / drawing / photo in sales file. | 2211 |
| 8100-0467 | Paint chassis frame rails springs cross-members fire pump drivelines air tanks axles front bumper extensions with brackets and front suction piping (if applicable) shall be painted: [#COL]. Does not include fuel tank. | 2143 |
| 8100-0476 | Brackets painted Durabak black. Includes rear aerial style brackets rear camera cover. | 199 |
| 8100-0480 | Upper panels rearward of upper module storage compartment to be aluminum smooth plate painted job color. | 276 |

| Item No. | Description | |
|---|---|---|
| 8100-0481 | Black Linex coating on top of the of standard diamond plate: Install on; Pump panel running boards body compartment tops enhanced extended compartment steps and rear tailboard. | 3821 |
| 8100-0488 | Paint rear tow eye assemblies yellow IPO black. | 317 |
| 8100-0502 | LINE-X black coating on the top of all exterior aluminum diamond tread (ADT) surfaces of the NWI rescue body. This includes both vertical and horizontal surfaces. Includes upper body dunnage pan upper compartment body doors and trim lift-up staircase and trim rear tailboard and folding step front of body compartment faces and miscellaneous ADT trim. | 8189 |
| 8100-0509 | Rear body FRP panels to be painted. | 273 |
| 8100-0515 | Paint front tow eye and rear frame mounted tow eye assemblies job color IPO black. | 390 |
| 8100-0518 | Paint all body compartment drip rails (hinged and/or rollup door) job color. | 902 |
| 8100-0522 | Paint front tow eye assemblies job color IPO black. | 226 |
| 8100-0523 | Paint rear 3-way receiver assembly job color IPO black. | 535 |
| 8100-0534 | Paint all roll up door header plate(s) and side tracks job color. | 1127 |
| 8100-0536 | SCBA and fuel fill doors on the rear body wheel well panels to be painted to match the body color. | 313 |
| 8100-0538 | Paint break painted on chassis stripe - 1/2" Wide - [#COL].To be located 1" above existing paint break if so equipped or at the same approximate position (when there is not a paint break). | 1559 |
| 8100-0539 | Paint break painted on body stripe - 1/2" Wide - [#COL].To be located 1" above existing paint break if so equipped or at the same approximate position (when there is not a paint break). | 2083 |
| 8100-0544 | Paint pump anode(s)exterior side as located in fire pump yellow for easy location identification during inspections. | 104 |
| 8100-0555 | Paint break painted on chassis stripe - 1/8" Wide - [#COL].To be located 1/4" below existing paint break chassis stripe if so equipped or at the same approximate position (when there is not a paint break). | 1559 |
| 8100-0556 | Paint Body - Small upper roof storage box. QTY (each) - For Mini Pumpers & Rescues. Does not include hardware. Sikkens paint. Color: [#COL]. | 949 |
| 8200-0000 | Scotchlite Letter (Each) - 3". Color [#COL]. | 12 |
| 8200-0001 | Scotchlite Letter (Each) - 6". Color [#COL]. | 14 |
| 8200-0002 | Scotchlite Letter (Each) - 9". Color [#COL]. | 15 |
| 8200-0003 | Scotchlite Letter (Each) - 12". Color [#COL]. | 15 |
| 8200-0004 | Scotchlite Letter (Each) - 15". Color [#COL]. | 17 |
| 8200-0005 | Scotchlite Letter (Each) - 18". Color [#COL]. | 19 |
| 8200-0006 | Maltese cross 12" (Pair). | 1289 |
| 8200-0007 | Sign Gold Letter (Each) - 3". | 16 |
| 8200-0008 | Sign Gold Letter (Each) - 6" | 22 |
| 8200-0009 | Sign Gold Letter (Each) - 9" | 34 |
| 8200-0010 | Sign Gold Letter (Each) - 12" | 34 |
| 8200-0011 | Scotchlite Letters (60) - 3". Color [#COL]. | 869 |
| 8200-0012 | Sign Gold Letters (60) - 3". | 1264 |
| 8200-0013 | Shade for lettering. | 6 |
| 8200-0014 | Sign "Stay Back 500FT" with black reflective lettering. Locate below rear of body. | 154 |
| 8200-0018 | Scotchlite Letters (90) - 3". Color [#COL]. | 1084 |
| 8200-0019 | Scotchlite Letters (120) - 3". Color [#COL]. | 1299 |
| 8200-0020 | Sign Gold Letters (90) - 3". | 1681 |
| 8200-0021 | Sign Gold Letters (120) - 3". | 2095 |
| 8200-0022 | Shade and outline for lettering. | 7 |
| 8200-0024 | Reflexite Letter (Each) - 18". [#COL] Reflexite letter(s) stitched to vinyl hosebed cover end flap. | 76 |
| 8200-0026 | Die cut letter in stripe (EA). | 29 |
| 8200-0027 | Scotchlite Letter (Each) - 5". Color [#COL]. | 14 |
| 8200-0028 | Sign Gold Letter (Each) - 5" | 22 |
| 8200-0029 | Scotchlite Letter (Each) - 10". Color [#COL]. | 16 |
| 8200-0030 | Sign Gold Letter (Each) - 10" | 34 |
| 8200-0031 | Scotchlite Letter (Each) - 30". Color [#COL]. | 23 |
| 8200-0033 | Scotchlite letter (each) - 8". Color [#COL]. | 16 |
| 8200-0036 | Scotchlite Letter (Each) - 4". Color [#COL]. | 13 |
| 8200-0038 | Reflexite Letter (Each) - 12". [#COL] Reflexite letter(s) stitched to vinyl hose bed cover end flap. | 60 |
| 8200-0039 | Maltese Cross SignGold up to 18'' dia (PR) with new layout. | 1162 |
| 8200-0040 | Gold leaf letters (90) - 3". | 4194 |
| 8200-0045 | Gold leaf letters (120) - 3". | 4881 |
| 8200-0046 | Scotchlite Letter (Each) - 27". Color [#COL]. | 22 |
| 8200-0047 | Sign Gold Letter (Each) - 4" | 18 |
| 8200-0048 | Sign Gold Letters (120) - 4". | 2576 |
| 8200-0052 | Sign Gold Letter (Each) - 8" | 34 |
| 8200-0061 | Scotchlite Letter (Each) - 2". Color [#COL]. | 10 |

| Item No. | Description | |
|---|---|---|
| 8200-0071 | Sign plate smooth aluminum on rear body roof over rear entry doors. Install using nutserts. | 269 |
| 8200-0073 | Sign Gold Letter (Each) - 3". Sign Gold to be small turn style. | 19 |
| 8200-0074 | Maltese Cross SignGold up to 15" dia (PR) with new layout. | 935 |
| 8200-0075 | Reflexite Letter (Each) - 10". [#COL] Reflexite letter(s) stitched to vinyl hose bed cover end flap. | 55 |
| 8200-0081 | Etched Vinyl Letter (Each) - 5" | 22 |
| 8200-0084 | Scotchlite Letter (Each) - 1". Color [#COL]. | 10 |
| 8200-0086 | Sign Gold Letter (Each) - 16". | 41 |
| 8200-0088 | Gold leaf letter (Each) - 4". | 78 |
| 8200-0089 | Gold leaf letters (EA) - 3". | 49 |
| 8200-0090 | Sign Silver Letter (Each) - 3" | 16 |
| 8200-0091 | Sign Silver Letter (Each) - 12" | 34 |
| 8200-0100 | Sign Gold Letter (Each) - 2". | 16 |
| 8200-0107 | Sign Silver Letter (Each) - 6" | 22 |
| 8200-0108 | Install customer supplied lettering. Location: Front cab door. | 101 |
| 8300-0002 | NFPA Scotchlite Stripe - 4" wide and straight on front/sides of cab and sides/rear of body. Color: [#COL]. Location: [#LOC]. | 830 |
| 8300-0003 | NFPA Scotchlite Stripe - 6" wide and straight on front/sides of cab and sides/rear of body. Color: [#COL]. Location: [#LOC]. | 840 |
| 8300-0006 | NFPA Scotchlite Stripe - 6" wide with "Z". Stripe straight on front sides and rear of cab and body. "Z" location to be specified by customer. Color: [#COL]. Location: [#LOC]. | 1327 |
| 8300-0008 | NFPA Scotchlite Stripe - 5" wide with "S". Stripe straight on front sides and rear of cab and body. "S" location to be specified by customer. Color: [#COL]. Location: [#LOC]. | 1481 |
| 8300-0009 | NFPA Scotchlite Stripe - 5" wide with double "S". Stripe straight on front sides and rear of cab and body. Double "S" locations to be specified by customer. Color: [#COL]. Location: [#LOC]. | 1812 |
| 8300-0011 | Scotchlite stripe (PR) 1/2" located 1/2" above and below existing stripe. Color: [#COL]. | 618 |
| 8300-0012 | Scotchlite stripes (4) 1/2" located (2) above and (2) below existing stripe. Stripes to be spaced 1/2" apart. Color: [#COL]. | 1227 |
| 8300-0013 | NFPA Scotchlite Stripe - 2" and 4" wide with "Z". Stripe straight on front sides and rear of cab and body. "Z" location to be specified by customer. 2" above 4" with 1" gap between stripes. Color: [#COL]. Location: [#LOC]. | 1874 |
| 8300-0016 | Paint Break Sign Gold Chassis Stripe - 3/4" Wide - Black Gold Black. To be located above existing paint break. | 290 |
| 8300-0018 | Sign gold scroll for body door with shade (Ea). Location: [#LOC] | 205 |
| 8300-0019 | Sign gold scroll for body door (Ea). Location: [#LOC] | 67 |
| 8300-0024 | Red/White rubrail scotchlite insert. | 241 |
| 8300-0025 | 1/4" Pin stripe above and below existing Scotchlite stripe. Color: [#COL]. | 990 |
| 8300-0026 | Scotchlite stripe 1" located 1" above and below existing stripe. Color: [#COL]. | 741 |
| 8300-0028 | NFPA Scotchlite 6" wide hockey stripe straight across front and may contour as it transitions from Cab to Body on each side. Color: [#COL]. Location: [#LOC]. | 1007 |
| 8300-0032 | Chevron "A" style 4" Scotchlite striping on rear of body. Includes rear facing extrusions panels and doors inboard/outboard of the beavertails(if applicable). Colors to be [#COL]. | 3918 |
| 8300-0033 | NFPA Scotchlite Stripe - 8" wide and straight on front/sides of cab and sides/rear of body. Color: [#COL]. Location: [#LOC]. | 1037 |
| 8300-0034 | Scotchlite stripe 2" located 1" above existing stripe. Color: [#COL]. | 470 |
| 8300-0036 | NFPA Scotchlite Stripe - 8" wide with "S". Stripe straight on front sides and rear of cab and body. "S" location to be specified by customer. Color: [#COL]. Location: [#LOC]. | 1684 |
| 8300-0037 | Chevron "V" style 4" Scotchlite striping on rear of body. Includes rear facing extrusions panels and doors inboard/outboard of the beavertails(if applicable). Colors to be [#COL]. | 3918 |
| 8300-0038 | Scotchlite stripe 2" located 1" above and below existing stripe. Color: [#COL]. | 937 |
| 8300-0039 | Scotchlite stripe 1" located .5" above and below existing stripe. Color: [#COL]. | 782 |
| 8300-0044 | Scotchlite stripe 1" located 1" above existing stripe. Color: [#COL]. | 391 |
| 8300-0045 | 1/4" pinstripe. Color: [#COL]. Location: At cab paint break | 217 |
| 8300-0046 | Scotchlite stripe (PR) 1/2" located directly above and below existing stripe. Color: [#COL]. | 777 |
| 8300-0048 | Paint break Scotchlite chassis stripe - 3/4" Wide - Black [#COL] Black. To be located above existing paint break. | 175 |
| 8300-0050 | Scotchlite stripe (PR) 1" located directly above and below existing stripe on satin roll-up doors only. Color: [#COL]. | 618 |
| 8300-0052 | Chevron "V" style Scotchlite striping on rear of body outboard of beavertails (if equipped). Colors to be [#COL]. | 1162 |
| 8300-0058 | Chevron "V" style 4" Scotchlite striping on rear B1 compt door (3) stripes. Colors to be red/white/black pinstripe. | 1015 |

| Item No. | Description | |
|---|---|---|
| 8300-0061 | Chevron "A" style 6" individual Scotchlite striping full width on rear of body. Includes rear facing extrusions panels and doors. Colors to be [#COL]. | 2067 |
| 8300-0062 | Chevron "A" style Scotchlite striping on rear of body outboard of beavertails (if equipped). Colors to be [#COL]. | 1162 |
| 8300-0065 | Paint break scotchlite chassis stripe - 3/4" Wide - White [#COL] White. To be located above existing paint break. | 755 |
| 8300-0066 | NFPA Scotchlite Stripe - 4" wide with "Z". Stripe straight on front sides and rear of cab and body. "Z" location to be specified by customer. Color: [#COL]. Location: [#LOC]. | 1317 |
| 8300-0072 | NFPA Scotchlite Stripe - 10" wide with "Z". Stripe straight on front sides and rear of cab and body. "Z" location to be specified by customer. Color: [#COL]. Location: [#LOC]. | 2266 |
| 8300-0076 | Chevron "A" style 4" Scotchlite striping on rear of body between beavertails; body panels and extrusions only (No doors). Colors to be [#COL]. | 1248 |
| 8300-0077 | Chevron "A" style Scotchlite striping on rear B1 compt door. Colors to be [#COL]. | 1962 |
| 8300-0078 | Chevron "A" style 4" 3M "Diamond Grade" striping on rear of body. Includes rear facing extrusions panels and doors inboard/outboard of the beavertails(if applicable). Colors to be [#COL]. | 4897 |
| 8300-0079 | Chevron "A" style 4" 3M "Diamond Grade" striping on rear pump panel/bleeder panel(s). Colors to be [#COL]. | 818 |
| 8300-0081 | Chevron "A" style 3M "Diamond Grade" striping on rear of body outboard of beavertails (if equipped). Colors to be [#COL]. | 1453 |
| 8300-0084 | Chevron "A" style 6" printed sheet Scotchlite striping full width on rear of body. Includes rear facing extrusions panels and doors. Colors to be [#COL]. | 1613 |
| 8300-0085 | Scotchlite stripe 1" located directly above and below existing stripe. Color: [#COL]. | 741 |
| 8300-0088 | NFPA Scotchlite Stripe - 4" wide and straight on sides and rear of body only. Color: [#COL]. Location: [#LOC]. | 915 |
| 8300-0090 | Scotchlite stripe 1.5" located directly above and below existing stripe. Color: [#COL]. | 784 |
| 8300-0091 | 1/4" Scotchlite pinstripe above and below existing stripe. Color: [#COL]. | 1130 |
| 8300-0093 | Chevron "A" style 6" printed sheet Scotchlite striping on front bumper. Colors to be [#COL]. | 666 |
| 8300-0094 | Chevron "A" style 4" Scotchlite striping on rear body panels only no extrusions. Colors to be [#COL]. | 2939 |
| 8300-0099 | Chevron "A" style 6" printed sheet Scotchlite striping on rear of body between beavertails. Colors to be [#COL]. | 1269 |
| 8300-0104 | Chevron "V" style 3" Scotchlite striping on rear of body. Colors to be Red/White/Blue. | 3918 |
| 8300-0109 | Chevron "A" style 6" 3M "Diamond Grade" striping on rear of body. Includes rear facing extrusions panels and doors inboard/outboard of the beavertails(if applicable). Colors to be [#COL]. | 4897 |
| 8300-0111 | Chevron "A" style 6" individual Scotchlite striping on rear of body except for the pump/ladder tunnel access door. Colors to be [#COL]. | 3918 |
| 8300-0112 | Chevron "A" style 6" Scotchlite striping on rear facing side of the slide out room. Colors to be [#COL]. | 1962 |
| 8300-0125 | Reflective [#COL] striping positioned in the "A" formation located in the lower door panel (EA). Location: [#LOC]. | 82 |
| 8300-0143 | NFPA Scotchlite Stripe - three stripes 3" wide with "Z" with 1" gap between stripes. Stripe straight on front sides and rear of cab and body. "Z" location to be specified by customer. Color: top stripe - Yellow middle stripe - White bottom stripe - Black. Location: top of bottom stripe flush with top of bumper and straight back. | 3509 |
| 8300-0144 | Chevron "A" style 6" 3M "Diamond Grade" striping full width on rear of body (does not include the B1 door). Includes rear facing extrusions panels and doors. Colors to be [#COL]. | 2060 |
| 8300-0146 | Chevron "A" style 6" 3M "Diamond Grade" striping full width on rear of body. Includes rear facing extrusions panels and doors. Colors to be [#COL]. | 2716 |
| 8300-0150 | Chevron "A" style 6" printed sheet Scotchlite striping on rear of body. Includes rear facing extrusions panels and doors inboard/outboard of the beavertails (if applicable). Colors to be [#COL]. | 1403 |
| 8300-0155 | NFPA Scotchlite Stripe - 4" wide with ribbon style "Z". Stripe straight on front sides and rear of cab and body. "Z" location to be specified by customer. Color: [#COL]. Location: [#LOC]. | 1327 |
| 8300-0162 | Scotchlite stripe 1" located 1" below existing stripe. Color: [#COL]. | 391 |
| 8300-0164 | Chevron "A" style 8" individual Scotchlite striping on rear of body. Includes rear facing extrusions panels and doors inboard/outboard of the beavertails(if applicable). Colors to be [#COL]. | 2250 |
| 8300-0179 | Chevron "A" style 6" printed sheet Scotchlite striping on rear of body. Includes rear facing extrusions panels inboard/outboard of the beavertails (if applicable). Does not include the rear door(s). Colors to be Yellow/Red. | 1332 |
| 8300-0181 | Paint Break Sign Gold Chassis Stripe - 3/4" Wide - Black Gold Black. Sign Gold to be small turn style. To be located above existing paint break. | 582 |

| Item No. | Description | |
|---|---|---|
| 8300-0186 | NFPA Scotchlite Stripe - 2" and 6" wide with "Z". Stripe straight on front sides and rear of cab and body. "Z" location to be specified by customer. 2" above 6" with 1" gap between stripes. 6" stripe to have a .25" outline above and below. Color: [#COL]. Location: [#LOC]. | 1874 |
| 8300-0190 | Chevron "A" style 6" 3M "Diamond Grade" striping on rear of body (does not include the B1 door). Includes rear facing extrusions panels and doors inboard/outboard of the beavertails(if applicable). Colors to be [#COL]. | 2060 |
| 8300-0191 | Paint break Scotchlite chassis stripe - 1/4" Wide - [#COL]. To be located above existing paint break. | 540 |
| 8300-0192 | NFPA Scotchlite Stripe - 8" and 3" wide with "Z". Stripe straight on front sides and rear of cab and body. "Z" location to be specified by customer. 8" above 3" with 1.5" gap between stripes. Color: White. Location: Center of the 8" stripe centered with Quad bezel (in between upper and lower bezel) and straight back. | 2462 |
| 8300-0193 | Chevron "A" style 3M "Diamond Grade" Dots in 6" striping pattern on rear of body (does not include the B1 door). Includes rear facing extrusions panels and doors inboard of the beavertails (if applicable). Colors to be [#COL]. | 3069 |
| 8300-0194 | Install dealer supplied Scotchlite pinstripe above and below existing stripe. Color: Blue. | 606 |
| 8300-0197 | Scotchlite stripe 1" located 1" down from top of stripe and 1" up from bottom of stripe (1"stripes on existing stripe). Color: [#COL]. | 782 |
| 8300-0198 | NFPA Scotchlite Stripe - 8" wide with "Z". Stripe straight on front sides and rear of cab and body. "Z" location to be specified by customer. Color: [#COL]. Location: [#LOC]. | 2462 |
| 8300-0200 | Scotchlite stripe 2" located 2" below existing stripe. Color: [#COL]. | 924 |
| 8300-0205 | NFPA Scotchlite Stripe - 4" wide with double ribbon. Double ribbon locations to be specified by customer. Color: [#COL]. Location: [#LOC]. | 1812 |
| 8300-0210 | Reflective tape. There will be reflective tape added to the front and both sides of all roll-out trays to aid in visibility. Tape will be [#COL] in color. | 1234 |
| 8300-0211 | There will be reflective tape added to the bottom 3' of the roll-out ladder side surfaces to aid in visibility. Tape will be [#COL] in color. | 177 |
| 8300-0214 | Chevron "A" style 6" printed sheet Scotchlite striping stitched to vinyl hosebed cover end flap. Colors to be [#COL]. | 499 |
| 8300-0217 | NFPA Scotchlite Stripe - 1" and 6" wide with "Z". Stripe straight on front sides and rear of cab and body. "Z" location to be specified by customer. 1" above 6" with 1" gap between stripes. 6" stripe to have a .25" outline above and below. Color: [#COL]. Location: [#LOC]. | 1874 |
| 8300-0220 | Paint Break Sign Gold Chassis Stripe - 1" Wide - Black pin stripe Sign Gold Black pin stripe. To be located above existing paint break if so equipped or at the same approximate position (when there is not a paint break). | 777 |
| 8300-0221 | Sign gold scroll (Ea). Scroll detail/definition shall be defined by sales administration and or shop order file. Location: [#LOC] | 67 |
| 8300-0222 | NFPA Scotchlite Stripe - 1" 4" and 1" wide with "Z". Stripe straight on front sides and rear of cab and body. "Z" location to be specified by customer. 1" above and below 4" with 1" gap between stripes. Color: [#COL]. Location: [#LOC]. | 1874 |
| 8300-0223 | NFPA Scotchlite Stripe - 6" wide with double pin stripe top and bottom. "Z" Stripe straight on front sides and rear of cab and body. "Z" location to be specified by customer. Stripe shall be a printed sheet laid out from top to bottom as 1/4" pin stripe 1/8" gap (wide stripe color) 1/8" pin stripe 6" wide stripe 1/8" pin stripe 1/8" gap (wide stripe color) 1/4" pin stripe. Color: [#COL]. Location: [#LOC]. | 1874 |
| 8300-0224 | Paint break Scotchlite chassis stripe - 1/2" Wide - [#COL]. To be located above existing paint break. | 618 |
| 8300-0225 | Paint break Scotchlite body stripe - 1/2" Wide - [#COL]. To be located above existing paint break. | 880 |
| 8300-0226 | Sign Gold Stripe - 3/4" Wide aerial sign plate - Gold with red pin stripe outline. The striping shall create a border around sign plate lettering. | 1306 |
| 8300-0229 | Scotchlite stripe 3" located 2" below existing stripe. Color: [#COL]. | 976 |
| 8300-0230 | Paint break painted on chassis stripe - 1/8" Wide - [#COL].To be located above existing paint break if so equipped or at the same approximate position (when there is not a paint break). | 1315 |
| 8300-0232 | NFPA Scotchlite Stripe - 2" and 4" wide with interlocking "Z". Stripe straight on front sides and rear of cab and body. "Z" location to be specified by customer. 2" above 4" with 1" gap between stripes. Color: [#COL]. Location: [#LOC]. | 1874 |
| 8300-0233 | NFPA Scotchlite Stripe - 1" 4" and 1" wide with triple interlocking "Z". Stripe straight on front sides and rear of cab and body. "Z" location to be specified by customer. 1" above and below 4" with 1" gap between stripes. Color: [#COL]. Location: [#LOC]. | 2741 |
| 8300-0234 | NFPA Scotchlite Stripe - 2" wide with "Heartbeat". Stripe straight on front sides and rear of cab and body. "heartbeat" location to be specified by customer. Color: [#COL]. Location: [#LOC]. | 1317 |

| Item No. | Description | |
|---|---|---|
| 8300-0240 | Installation of a customer supplied stripe 16" in width shall be installed. The 16" stripe material shall be supplied by the customer Spectra Red in color and shall be reviewed by the Graphics personnel prior to order entry. The stripe shall align on the cab face as specified by customer and go straight back. | 1911 |
| 8300-0245 | 5/16" Pin stripe above and below existing Scotchlite stripe. Color: [#COL]. | 990 |
| 8300-0246 | Yellow M 983-71 rubrail scotchlite insert. | 536 |
| 8300-0248 | Chevron "A" style 6" printed sheet Scotchlite striping on entire rear of body. Includes rear facing extrusions panels doors and rear driver and officer compartment face. Colors to be [#COL]. | 2097 |
| 8300-0251 | Scotchlite stripe 3" located 1" below existing stripe. Color: [#COL]. | 976 |
| 8300-0252 | NFPA Scotchlite hockey stripe. The stripe shall be 4"wide with a 3/4" gap above with a 2" wide stripe. The hockey stripe shall go straight across front and may contour as it transitions from cab to body on each side. Color: [#COL]. Location: [#LOC]. | 1103 |
| 8300-0254 | Sign gold scroll (2) at front cab corners below windshield with connecting .75" sign gold chassis stripe between scrolls and down to trim. | 394 |
| 8300-0258 | Chevron "A" style 6" Blue 3M Scotchlite and 983-71 Yellow 3M "Diamond Grade" striping on rear of body. Includes rear facing extrusions panels and doors inboard/outboard of the beavertails (if applicable). | 2716 |
| 8300-0259 | Chevron "A" style 3M Diamond Grade striping in rubrail. Colors to be: [#COL] | 761 |
| 8300-0264 | Paint break Scotchlite chassis stripe - 1" Wide - Red [#COL] Black. To be located above existing paint break. | 220 |
| 8300-0265 | NFPA Scotchlite Stripe - 6" wide with "Z". Stripe straight on front sides and rear of cab and body. "Z" location to be specified by customer. Color: White on cab and body / Ruby Red on body doors. Location: bottom of stripe flush with bottom of cab and straight back. | 1327 |
| 8300-0272 | NFPA Scotchlite Stripe - 2" and 4" wide with interlocking hockey. Stripe straight on front sides and rear of cab and body. Hockey location to be specified by customer. 2" above 4" with 1" gap between stripes. Color: [#COL]. Location: [#LOC]. | 1874 |
| 8300-0274 | Chevron "A" style 6" Reflexite V98 striping full width on rear of body. Includes rear facing extrusions panels and doors. Colors to be [#COL]. | 2309 |
| 8300-0279 | Stripe cab lock bar. Color: White. | 86 |
| 8300-0286 | Chevron "A" style 6" Reflexite V98 striping full width on rear of body (does not include the B1 door and/or center aerial ladder tunnel door). Includes rear facing extrusions panels and doors. Colors to be [#COL]. | 2088 |
| 8300-0287 | Sign Gold Stripe - 3/4" Wide aerial sign plate - Black Gold Black. The striping shall create a border around sign plate lettering. | 1306 |
| 8300-0288 | Sign Gold Body Stripe - 3/4" Wide - Black Gold Black. To be located on upper body sides terminating with an arrow at each end. | 757 |
| 8300-0289 | Paint Break Sign Gold Chassis Stripe - 3/4" Wide - Black Gold Black. To be located at the same approximate position as a paint break with dip to grille. | 290 |
| 8300-0291 | Scotchlite stripe 1" located 2" above and below existing stripe. Color: [#COL]. | 741 |
| 8300-0292 | Chevron "A" style 6" Reflexite V98 striping on rear of body. Includes rear facing extrusions panels and doors inboard of beavertails (if equipped). Does not include rear facing outboard compartment faces. Colors to be [#COL]. | 2082 |
| 8300-0293 | Stripe cab lock bar. Color: Chevron red/yellow. | 86 |
| 8300-0296 | Scotchlite stripe 2" located flush directly above and below existing stripe. Color: [#COL]. | 937 |
| 8300-0297 | NFPA Scotchlite Stripe - 3" and 6" wide with interlocking "Z". Stripe straight on front sides and rear of cab and body. "Z" location to be specified by customer. 3" above 6" with 1" gap between stripes. Color: [#COL]. Location: [#LOC]. | 2325 |
| 8300-0298 | Scotchlite stripe 1" located below existing stripe. Color: (1) white (1) gold. | 391 |
| 8300-0301 | NFPA Scotchlite Stripe - 6" wide with "S". Stripe straight on front sides and rear of cab and body. "S" location to be specified by customer. Color: [#COL]. Location: [#LOC]. | 1573 |
| 8300-0303 | Scotchlite Stripe - 10" wide reflective stripe on heavy duty front bumper. Color: [#COL]. | 666 |
| 8300-0304 | NFPA Scotchlite Stripe - 1"-6"-1" wide with interlocking hockey. Stripe straight on front sides and rear of cab and body. Hockey location to be specified by customer. 1" above and below 4" with 1" gap between stripes. Color: [#COL]. Location: [#LOC]. | 2092 |
| 8300-0305 | Scotchlite Stripe - 2" wide and straight on front/sides of cab and sides/rear of body. Color: [#COL]. Location: [#LOC]. | 470 |
| 8300-0308 | Chevron "A" style 6" 3M "Diamond Grade" striping on the lower body door panels approx 6" high. Colors to be [#COL]. | 75 |
| 8300-0311 | Scotchlite stripe 2" located 2" above existing stripe. Color: [#COL]. | 470 |
| 8300-0312 | Scotchlite Stripe - 4" wide with graphic white "S"; See photos on file with sales. Stripe straight on front sides and rear of cab and body. "S" location to be specified by customer. Color: Orange. Location: bottom of stripe flush with top of bumper and straight back. | 1808 |

| Item No. | Description | |
|---|---|---|
| 8300-0316 | Chevron "A" style 6" individual Scotchlite striping full width on rear of body. Includes driver and officer rear compartment face smooth plate panels and/or doors outboard and above the center rear compartment opening. Does not include rear compartment door. Colors to be [#COL]. | 1487 |
| 8300-0318 | NFPA Scotchlite Stripe - 6" wide and straight on body only. Color: [#COL]. Location: [#LOC]. | 840 |
| 8300-0321 | Chevron "A" style 6" printed sheet Scotchlite striping on rear of body between beavertails below full width intermediate step. Colors to be [#COL]. | 1269 |
| 8300-0325 | Paint Break Sign Silver Chassis Stripe - 3/4" Wide - Black Silver Black. To be located above existing paint break. | 290 |
| 8300-0326 | Reflective printed striping. Striping pattern color and position of striping to match cab door on the same side of body. Locate: body entry door panel. | 174 |
| 8300-0327 | Scotchlite stripe (PR) 1/4in. located directly above and below existing stripe. Color: [#COL]. | 777 |
| 8300-0329 | Chevron "A" style 6" 3M "Diamond Grade" striping full width on rear of body; half height from bottom per NFPA/ULC requirements. Includes rear facing extrusions panels and doors. Colors to be [#COL]. | 1570 |
| 8300-0342 | Stripe Scotchlite 5" front bumper lid; [#COL]. Includes 1/8" smooth plate on front of raised lid. | 369 |
| 8300-0343 | Chevron "A" style 6" 3M "Diamond Grade" striping on the lower area of the vertically hinged interior body door pans approx 12" high. Note compartments with double doors will apply only to primary door or door pan that faces rearward. Colors to be [#COL]. | 152 |
| 8400-0004 | Install customer supplied logos on front cab doors. | 227 |
| 8400-0005 | A pair of customer logos for cab supplied to E-One in a digital format. | 977 |
| 8400-0008 | Star of life logo 12". Location: [#LOC]. | 114 |
| 8400-0009 | American Flag (EA). Approx size: 7"H x 14"W. Location: [#LOC] | 130 |
| 8400-0010 | Install customer logo from an existing E-ONE design (EA). Location: [#LOC] | 140 |
| 8400-0012 | Star of life logo 22.5". Location: [#LOC] | 226 |
| 8400-0017 | A customer logo supplied to E-ONE in a digital format. Location: [#LOC]. | 346 |
| 8400-0018 | Star of life logo 20". Location: (1) each side centered on canopy window. | 379 |
| 8400-0023 | Install customer supplied logo. Location: [#LOC]. | 80 |
| 8400-0024 | Install up to 12" SignGold customer logo from an existing E-ONE design (EA). Location: [#LOC]. | 209 |
| 8400-0029 | Reflective American Flag (PR) - wavy. Approx size: 12"H x 18"W. Location: [#LOC]. | 260 |
| 8400-0036 | Star of life logo 20" (PR). Location: (1) each side centered between cab doors. | 379 |
| 8400-0039 | Star of life logo 12" with black outline. Location: [#LOC]. | 114 |
| 8400-0041 | Vision flag on rear commercial cab window. | 418 |
| **DOCUMENTATION AND MISCELLANEOUS** | | |
| 9300-0009 | Manuals Operator and Service CD-ROM. | 387 |
| 9300-0010 | Approval Drawings | 1114 |
| 9300-0013 | Approval Drawings Revised | 224 |
| 9300-0017 | Manuals Printed (Set). | 1009 |
| 9300-0018 | Manuals Operator and Service CD-ROM (additional set). | 57 |
| 9300-0035 | Customer late change order. | 343 |
| 9300-0040 | As built electrical drawings. | 2706 |
| 9300-0045 | Manuals Printed (Set). Includes (1) service (1) parts and (5) operation manuals. | 1009 |
| 9300-0303 | Approval Drawings - Top View of body and pump module section of the vehicle. | 306 |
| 9300-0306 | Approval Drawings-Additional views. Top view of body and pump module areas. Detailed top view of the interior cab view layout. | 612 |

**Notes:**

**1) Availability of options are limited by other options selected, and not all options are available in every chassis/apparatus configuration. Selection of an option may require several of the above parts/items to complete the option package.**

**2) Certain options, alone or in combination with other options, may require heavier axle/suspension packages, longer frames, or reinforced frames at additional cost per the above price list.**

**3) To configure options, the E-One State Term Schedule authorized dealer will use quote configuration software to select the components necessary to effect the option, feature, or configuration requested and quote the total option price.**