2016 RETAIL PRICE LIST

OHIO STATE CONTRACT—KING PIN LINE

Effective Date: 01/15/2016

Rigid Gooseneck

Hydraulic Tail

Detachable Gooseneck

Jeep

Towmaster, Inc.

61381 US Hwy 12
Litchfield, MN 55355

Phone: **320-693-7900**
Toll Free: 800-462-4517
Fax: 320-693-7821

Parts Department

Phone: **320-593-4595**
Toll Free: 866-239-2221
Fax: 320-693-5703

This page left blank.

© Towmaster, Inc. All Rights Reserved Printed in the U.S.A.

TOWMASTER WARRANTY SUMMARY

(FULL AND CURRENT TEXT AVAILABLE AT TOWMASTER.COM)
This warranty effective on trailers manufactured after 01/01/2009.

Towmaster, Inc. (herein referred to as Towmaster) offers this extensive warranty to the original purchaser of our trailers. Warranty starts from the date of sale as long we receive the filled-out warranty card. If we do not receive the warranty card, warranty starts from the ship date of the unit.

LIMITED LIFETIME FRAME WARRANTY
Towmaster warranties the trailer main frame (frame, crossmembers, gussets, beavertail, and tongue or gooseneck) for the lifetime of the trailer to the original licensed owner to be free from defects in material and workmanship. This LIFETIME WARRANTY does not cover the hitch (ball, pintle, and gooseneck fifth wheel), tires, wheels, axles, suspension, ramps, lights, wiring, paint, wood, d-rings or any other features or options outside the scope of the trailer main frame weldment. Limited Lifetime is determined by the following criteria: The life expectancy of the trailer which is determined to be 10 years on tag trailers 50,000 lb. capacity and lower, or 5 years on king-pin trailers 50,000 lb. capacity and up, or 5 years on dump trailers, to the original owner and is non-transferrable, limited to the first accident or overloading. This warranty also does not cover:

1. Products which have been operated in excess of rated capacities
2. Misuse, abuse or accidents
3. Vehicles which have been altered, modified or repaired in any manner not authorized by our company

FIVE-YEAR WARRANTY
Each Dexter Torflex Axle carries a limited 5-YEAR WARRANTY on the suspension to be free from defect in material and workmanship. Warranty is limited to Dexter warranty policy.

TWO-YEAR LIMITED WARRANTY
Depending upon which suspension is used, it may carry a limited 2-YEAR WARRANTY by its manufacturer.

FULL ONE-YEAR WARRANTY
Towmaster warranties each new product manufactured by us to be free from defects in material and workmanship for a period of one year from date of delivery to the original purchaser except as noted below.

This one-year warranty covers the entire trailer against material and workmanship except as noted:

1. New products which have been operated in excess of rated capacities
2. Misuse, abuse or accidents
3. Items that have been pinched (air or hydraulic hose)
4. Vehicles which have been altered, modified or repaired in any manner not authorized by our company
5. Second-hand or used vehicles
6. Wear items such as tires, battery, suspension, bearings, parking jacks
7. Products that have not been properly maintained (by the dealer or consumer)

In no way shall the manufacturer be held liable for consequential damages such as rentals of substitute vehicles, loss of profits, downtime, or other commercial losses. This warranty does not cover shipment of trailer or parts to dealer or manufacturer, or return shipment of trailer or parts to dealer or consumer from factory.

TIRE / BATTERY WARRANTY
New vehicle tires are warranted by their respective manufacturers and are prorated. Battery is warranted by Towmaster and is prorated.

TOWMASTER'S OBLIGATION
Our obligation under this warranty is to repair or replace, at no cost to the end user, any warrantable part proven defective within the time limit of this warranty at our factory or at an Authorized Towmaster Dealer. Towmaster will handle disposition of warranties on all other purchased components such as axles, suspensions, wheels, batteries, parking jacks and other purchased parts in conjunction with their respective manufacturers, and under the terms of their respective warranty policies.

We must receive immediate notification of a defect and no allowance will be made for repairs without our prior consent or approval. Manufacturer does not pre-authorize any dealership for warranty work. The dealer must call our warranty service department to receive an authorization number. If the work performed is not preauthorized with a claim number, it may be deemed void. Defective parts must be returned within twenty days of receipt of replacement parts or credit may not be given for the replacement parts and an invoice may be issued.

This warranty is in lieu of all other warranties, expressed or implied by law or otherwise, and there is no warranty of merchantability or fitness of purpose. Federal regulations require motor vehicle manufacturers to maintain a record of original owners of their equipment. Our warranty registration fulfills this requirement. Please make every effort to complete the warranty card document and send it in. This warranty written under the laws of Minnesota, USA and some provisions in this warranty may be adjusted according to your local state, province or country's laws. Complete warranty details and changes can be read on our web site, www.towmaster.com.

CUSTOMER REGISTRATION REQUIRED
Federal regulations require motor vehicle manufacturers to maintain a record of original owners of their equipment. Our warranty registration fulfills this requirement. Please make every effort to complete this document and send it in.

Manufacturer reserves the right to modify, without notice, specific designs and specifications as deemed advisable on the trailers described herein without obligation in regards to trailers previously sold. The manufacturer also reserves the right to discontinue any model or models without obligation in regards to trailers previously sold. Written warranty covers each trailer. No other warranty expressed or implied is made. Tire and brake warranty through original manufacturer. All dimensions approximate.

Full warranty information available online at Towmaster.com.

© Towmaster, Inc. All Rights Reserved Printed in the U.S.A.

Trailer Model Index

Rigid Gooseneck

T-50RG

T-70RG

Hydraulic Tail

T-70HT

T-110HT

Detachable Gooseneck

T-70DTG

T-100DTG

T-110DTG

T-120DTG

Jeep

T-80J

© Towmaster, Inc. All Rights Reserved Printed in the U.S.A.

GAWR, GVWR, and Payload Ratings

Towmaster determines the GAWR and GVWR ratings of its trailers using the following determinations:

GAWR
GAWR is determined by using the weakest link between the axle capacity rating and the combined wheel and tire rating.

GVWR
GVWR is determined by taking a fleet average weight, plus payload capacity rating (as determined by the manufacturer).

Payload Capacity
Payload is determined by one of the following calculations:

If your state recognizes weight transfer to the tow vehicle transfer, then calculate payload with this formula:

GVWR - Trailer Weight = Payload Capacity

If your state ONLY recognizes GAWR or trailer capacity rating and does NOT recognize weight transfer to the tow vehicle to transfer load, then calculate using this formula:

GAWR OR Trailer capacity - Trailer Weight = Payload Capacity

Trailer weight can fluctuate depending upon dryness of the wood deck, options installed and deck length. The best way to get the actual weight of the trailer is to scale it. Our published weights and capacities are for reference only.

Tire/Wheel Load Ratings

Tire Size	Load Range	Tire Ply	Tire/Wheel Capacity	PSI	MPH	(S)ingle (D)ual	Bolt Pattern	Approx. Tire Dia. (in.)
ST225/75Rx15	D	8	2540	65	65	S	6 on 5.5 in ø	28.3
ST225/75Rx15	D	8	2540	65	65	S	8 on 6.5 in ø	28.3
235/80Rx16	E	10	3520	80	55	S	8 on 6.5 in ø	30.8
235/85Rx16	E	10	3640	80	65	S	6 on 5.5 in ø	31.7
235/85Rx16	E	10	3640	80	65	S	8 on 6.5 in ø	31.7
235/85Rx16	E	10	3305	80	65	D	8 on 6.5 in ø	31.7
235/85Rx16	G	14	3750	110	65	S	Upgrade	31.7
235/85Rx16	G	14	3415	110	65	D	Upgrade	31.7
235/75Rx17.5	H	16	5675	125	62	D	8 on 275mm ø	30.9
215/75Rx17.5	H	16	4805	125	62	S	8 on 6.5 in ø	29.7
215/75Rx17.5	H	16	4540	125	62	D	8 on 275mm ø	29.7
235/75Rx22.5	H	16	5070	120	62	D	10 on 285.75mm ø	35.9
255/70Rx22.5	H	16	5070	120	62	D	10 on 285.75mm ø	36.1
275/75Rx22.5	H	16	6395	125	75	D	10 on 285.75mm ø	38.2

© Towmaster, Inc. All Rights Reserved Printed in the U.S.A.

Gooseneck Swing Clearance

(A-Frame / Rigid Gooseneck / Hydraulic Tail)

These are the standard swing clearance dimensions on our goosenecks. Please specify swing clearance and truck height when ordering if you require a different clearance dimension.

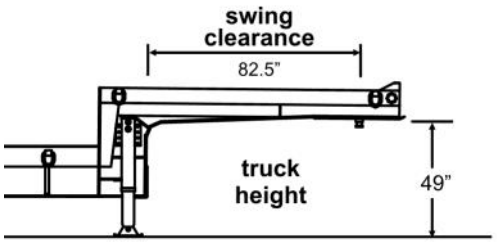

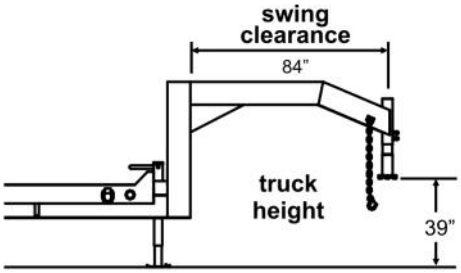

Detachable Gooseneck Swing Clearance

Use the chart below to determine the proper gooseneck length to fit your tractor. Detachable gooseneck trailers come in a variety of gooseneck length options. These dimensions will help determine the swing clearance needed. If you have any questions, please call the factory for clarification.

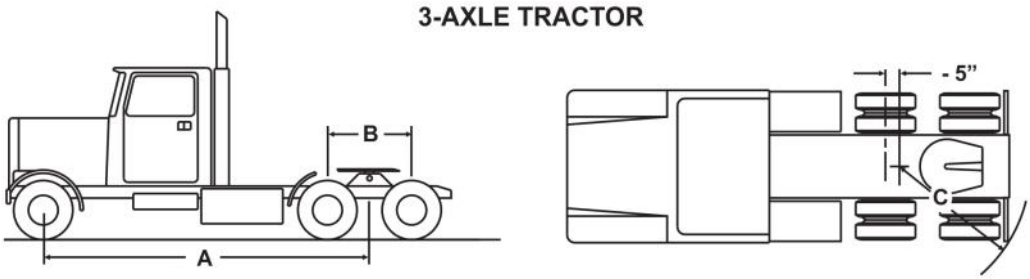

DIMENSION	DESCRIPTION
A=	Wheel Base
B=	Drive Axle Spacing
C=	Center of Forward Drive Axle, minus (-) 5 inches to outer edge of rear tire or mud flap

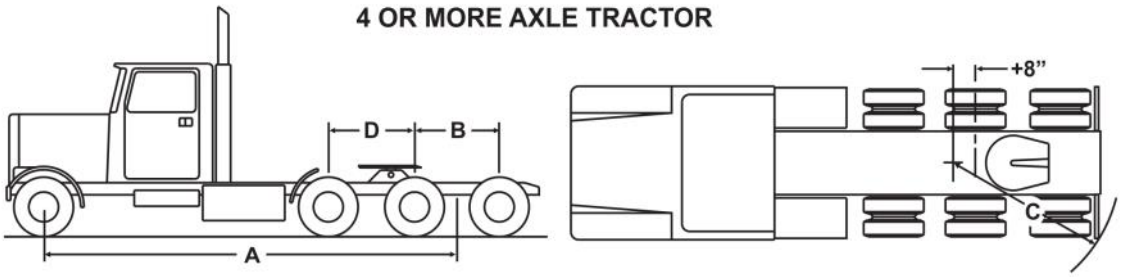

DIMENSION	DESCRIPTION
A=	Wheel Base
B=	Drive Axle Spacing
C=	Center of Forward Drive Axle, plus (+) 8 inches to outer edge of rear tire or mud flap
D=	Other Axle Spacing
	Number of Axles
Y N	Lift Axle

© Towmaster, Inc. All Rights Reserved Printed in the U.S.A.

Towmaster, Inc.
61381 US Hwy 12
Litchfield, MN 55355
www.towmaster.com

Toll Free: 800-462-4517
Local: 320-693-7900
Fax: 320-693-7921

TRAILERS • TRUCK EQUIPMENT

Effective Date: 1/15/2015

Rigid Gooseneck/

Model: **T-50RG**

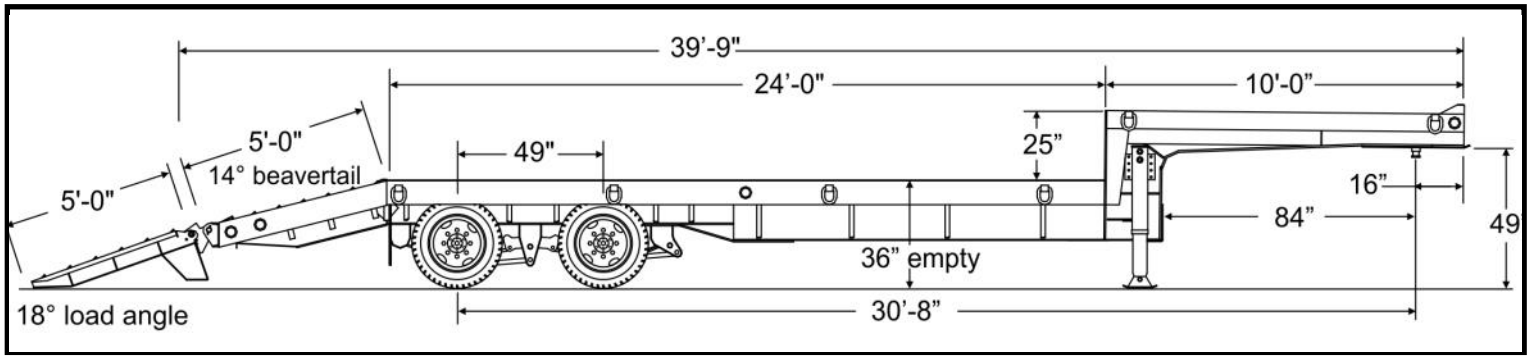

May be shown with options

STANDARD FEATURES

HITCH / TONGUE

- 2" king pin hitch
- 10'-0" Rigid Gooseneck
- 2" nominal white oak decking
- D-ring tie downs (2 per side)
- (2) 25K bolt-on two-speed parking jacks

FRAME / DECK

- 24 ft. deck length
- 102" load width
- 36" deck height
- I-beam main frame
- 3" Jr. I-beam crossmembers, 80,000 psi
- 2" nominal white oak wood deck
- D-ring tie-downs (4 per side)
- 5 ft. steel angle iron beavertail (14° angle)

RAMPS / TAIL

- 21" x 5'-0" channel sides, cleated ladder style
- Two-way spring-assist ramps

AXLES / SUSPENSION

- Hutchens 9700 adjustable suspension
- (2) 22,500 lb. axles (8 wheels)
- Tires - 215/75R17.5, load range H, 16-ply
- 17.5" budd wheels, 8-bolt, hub piloted
- Air brakes (12.25x7.5)
- Automatic slack adjusters
- Oil bath hubs

LIGHTS / WIRING

- Rubber grommet mounted LED lights
- Sealed modular wiring

STANDARD FEATURES

- Limited Lifetime Frame Warranty*
- One-Year full Warranty*
- Weatherproof registration holder
- Two-component polyurethane primer and paint
- Trailer color: Equipment Black
- Ramp color: Equipment Red

***See web site for warranty details**

***Weights and capacities vary depending upon options. Published weights are for reference only.**

GAWR (lbs)	GVWR (lbs)	WEIGHT (lbs)	CAPACITY (lbs)	DECK WIDTH (in)	DECK LENGTH (ft)	MSRP
45,000	61,300	11,300	50,000	102"	24'	**$26,630**

Subject to F.E.T. – deduct $12.33 per tire

Towmaster manufactures a complete line of trailers in several capacities. Listed weights and dimensions are approximate and can vary depending upon options installed. See VIN tag for GVWR. Check our website or see your authorized dealer for more information. Manufacturer reserves the right to modify, change or discontinue models or options as seen fit without obligation to previously sold units. Written warranty covers each trailer. Some items shown may be optional equipment.

USA DESIGNED AND BUILT

©Copyright Towmaster, Inc.

Towmaster, Inc.
61381 US Hwy 12
Litchfield, MN 55355
www.towmaster.com

Toll Free: 800-462-4517
Local: 320-693-7900
Fax: 320-693-7921

TRAILERS • TRUCK EQUIPMENT

Effective Date: 1/15/2015

Rigid Gooseneck/

Model: **T-70RG**

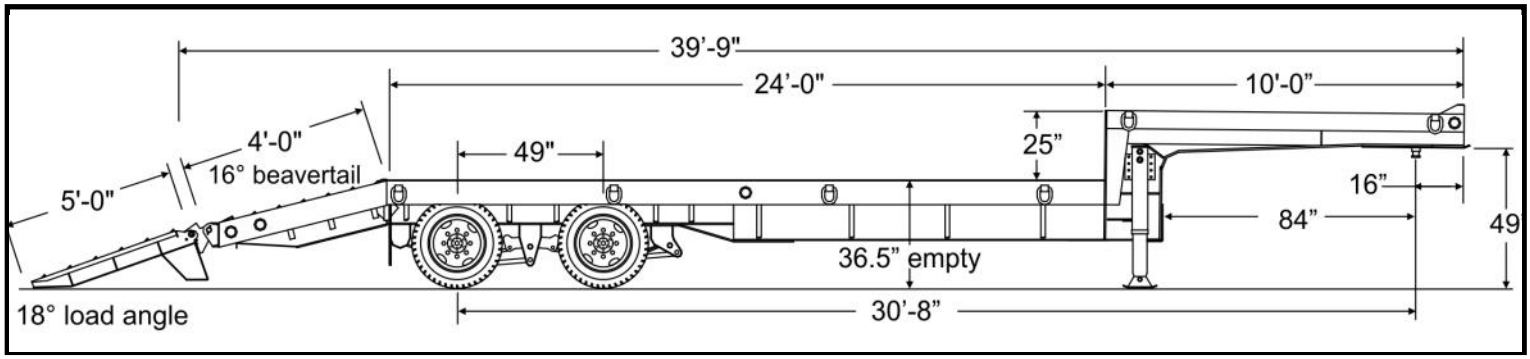

May be shown with options

STANDARD FEATURES

HITCH / TONGUE

- 2" king pin hitch
- 10'-0" Rigid Gooseneck
- 2" nominal white oak decking
- D-ring tie downs (2 per side)
- (2) 25K bolt-on two-speed parking jacks

FRAME / DECK

- 24 ft. deck length
- 102" load width
- 36.5" deck height
- Cambered I-beam main frame (pierced)
- 6" Jr. I-beam crossmembers, 80,000 psi
- 2" nominal white oak wood deck
- D-ring tie-downs (4 per side)
- 4 ft. steel angle iron beavertail (16° angle)

RAMPS / TAIL

- 21" x 5'-0" channel sides, cleated ladder style
- Two-way spring-assist ramps

AXLES / SUSPENSION

- Hutchens 9700 adjustable suspension
- (2) 22,500 lb. axles (8 wheels)
- Tires - 235/75R17.5, load range H, 16-ply
- 17.5" budd wheels, 8-bolt, hub piloted
- Air brakes (12.25x7.5)
- Automatic slack adjusters
- Oil bath hubs

LIGHTS / WIRING

- Rubber grommet mounted LED lights
- Sealed modular wiring

STANDARD FEATURES

- Limited Lifetime Frame Warranty*
- One-Year full Warranty*
- Weatherproof registration holder
- Two-component polyurethane primer and paint
- Trailer color: Equipment Black
- Ramp color: Equipment Red

***See web site for warranty details**

***Weights and capacities vary depending upon options. Published weights are for reference only.**

GAWR (lbs)	GVWR (lbs)	WEIGHT (lbs)	CAPACITY (lbs)	DECK WIDTH (in)	DECK LENGTH (ft)	MSRP
45,000	82,600	12,600	70,000	102"	24'	**$33,565**

Subject to F.E.T. – deduct $23.67 per tire

Towmaster manufactures a complete line of trailers in several capacities. Listed weights and dimensions are approximate and can vary depending upon options installed. See VIN tag for GVWR. Check our website or see your authorized dealer for more information. Manufacturer reserves the right to modify, change or discontinue models or options as seen fit without obligation to previously sold units. Written warranty covers each trailer. Some items shown may be optional equipment.

USA DESIGNED AND BUILT

©Copyright Towmaster, Inc.

Towmaster, Inc.
61381 US Hwy 12
Litchfield, MN 55355
www.towmaster.com

Toll Free: 800-462-4517
Local: 320-693-7900
Fax: 320-693-7921

TRAILERS • TRUCK EQUIPMENT

Effective Date: 1/15/2015

Hydraulic Tail/

Model: **T-70HT**

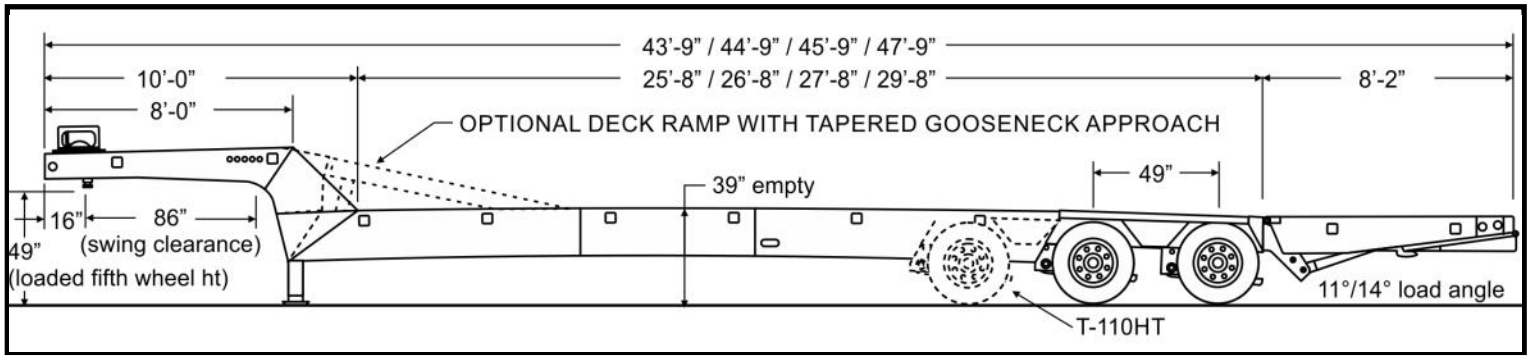

May be shown with options

STANDARD FEATURES

HITCH / TONGUE

- 2" king pin
- King pin setting: 16"
- 8'-0" steel top deck with steel slope
- Stake pockets (2 per side)
- (2) Integrated storage trays with lids
- (2) Telescoping parking stands
- 12K Hydraulic Winch, 3/8" x 60' cable, w/tensioner

FRAME / DECK

- 102" load width
- 39" deck height (empty)
- Cambered I-beam main frame, 100,000/80,000 psi
- I-beam crossmembers
- Crossmembers 12" on center
- 2" nominal oak wood deck
- Stake pockets on 4'-0" centers

RAMPS / TAIL

- 8'-0" hyd. folding tail w/Angelim Pedra wood decking (raised)
- 4'-0" hyd. fold-under section with diamond plate

AXLES / SUSPENSION

- Air ride suspension with dump valve
- (2) 22,500 lb. axles
- Tire - 235/75R17.5, load range H
- 17.5" budd wheels, 8-bolt, hub piloted
- Air brakes (sensor on 1 axle, 2S/1M) w/ABS
- Brake size (12.25x7.5)
- Oil bath hubs
  - Automatic slack adjusters

LIGHTS / WIRING

- Rubber grommet mounted LED lights
- Sealed modular wiring

STANDARD FEATURES

- Limited Lifetime Frame Warranty*
- One-Year full Warranty*
- Weatherproof registration holder
- Media blasted
- Two-component polyurethane primer and paint
- Trailer color: Equipment Black
- Suspension dump valve with gauge

***See web site for warranty details**

***Weights and capacities vary depending upon options. Published weights are for reference only.**

GAWR (lbs)	GVWR (lbs)	WEIGHT (lbs)	CAPACITY (lbs)	DECK WIDTH (in)	DECK LENGTH (ft)	MSRP
45,400	87,800	17,800	70,000	102"	44'	**$51,840**
45,400	87,800	17,800	70,000	102"	45'	**$52,965**
45,400	87,800	17,800	70,000	102"	46'	**$53,995**
45,400	87,800	17,800	70,000	102"	48'	**$56,125**

Subject to F.E.T. – deduct $23.67 per tire

Towmaster manufactures a complete line of trailers in several capacities. Listed weights and dimensions are approximate and can vary depending upon options installed. See VIN tag for GVWR. Check our website or see your authorized dealer for more information. Manufacturer reserves the right to modify, change or discontinue models or options as seen fit without obligation to previously sold units. Written warranty covers each trailer. Some items shown may be optional equipment.

USA DESIGNED AND BUILT

©Copyright Towmaster, Inc.

Towmaster, Inc.
61381 US Hwy 12
Litchfield, MN 55355
www.towmaster.com

Toll Free: 800-462-4517
Local: 320-693-7900
Fax: 320-693-7921

TRAILERS • TRUCK EQUIPMENT

Effective Date: 1/15/2015

Hydraulic Tail/

Model: **T-110HT**

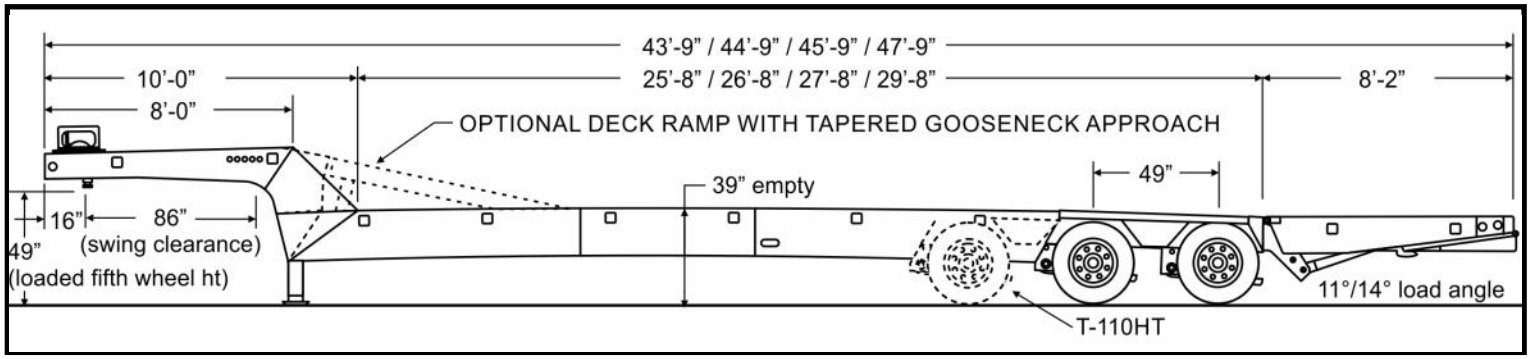

May be shown with options

STANDARD FEATURES

HITCH / TONGUE

- 2" king pin
- King pin setting: 16"
- 8'-0" steel top deck with steel slope
- Stake pockets (2 per side)
- (2) Integrated storage trays with lids
- (2) Telescoping parking stands
- 12K Hydraulic Winch, 3/8" x 60' cable, w/tensioner

FRAME / DECK

- 102" load width
- 39" deck height (empty)
- Cambered I-beam main frame, 100,000/80,000 psi
- I-beam crossmembers
- Crossmembers 12" on center
- 2" nominal oak wood deck
- Stake pockets on 4'-0" centers

RAMPS / TAIL

- 8'-0" hyd. folding tail w/Angelim Pedra wood decking (raised)
- 4'-0" hyd. fold-under section with diamond plate

AXLES / SUSPENSION

- Air ride suspension with dump valve
- (3) 22,500 lb. axles
- Tire - 235/75R17.5, load range H
- 17.5" budd wheels, 8-bolt, hub piloted
- Air brakes (sensor on 1 axle, 2S/1M) w/ABS
- Brake size (12.25x7.5)
- Oil bath hubs
  - Automatic slack adjusters

LIGHTS / WIRING

- Rubber grommet mounted LED lights
- Sealed modular wiring

STANDARD FEATURES

- Limited Lifetime Frame Warranty*
- One-Year full Warranty*
- Weatherproof registration holder
- Media blasted
- Two-component polyurethane primer and paint
- Trailer color: Equipment Black
- Suspension dump valve with gauge

***See web site for warranty details**

***Weights and capacities vary depending upon options. Published weights are for reference only.**

GAWR (lbs)	GVWR (lbs)	WEIGHT (lbs)	CAPACITY (lbs)	DECK WIDTH (in)	DECK LENGTH (ft)	MSRP
68,100	132,800	22,800	110,000	102"	44'	**$71,100**
68,100	132,800	22,800	110,000	102"	45'	**$72,300**
68,100	132,800	22,800	110,000	102"	46'	**$73,570**
68,100	132,800	22,800	110,000	102"	48'	**$76,100**

Subject to F.E.T. – deduct $23.67 per tire

Towmaster manufactures a complete line of trailers in several capacities. Listed weights and dimensions are approximate and can vary depending upon options installed. See VIN tag for GVWR. Check our website or see your authorized dealer for more information. Manufacturer reserves the right to modify, change or discontinue models or options as seen fit without obligation to previously sold units. Written warranty covers each trailer. Some items shown may be optional equipment.

©Copyright Towmaster, Inc.

Towmaster, Inc.
61381 US Hwy 12
Litchfield, MN 55355
www.towmaster.com

Toll Free: 800-462-4517
Local: 320-693-7900
Fax: 320-693-7921

TRAILERS • TRUCK EQUIPMENT

Effective Date: 1/15/2015

Detachable Goose-

Model: **T-70DTG**

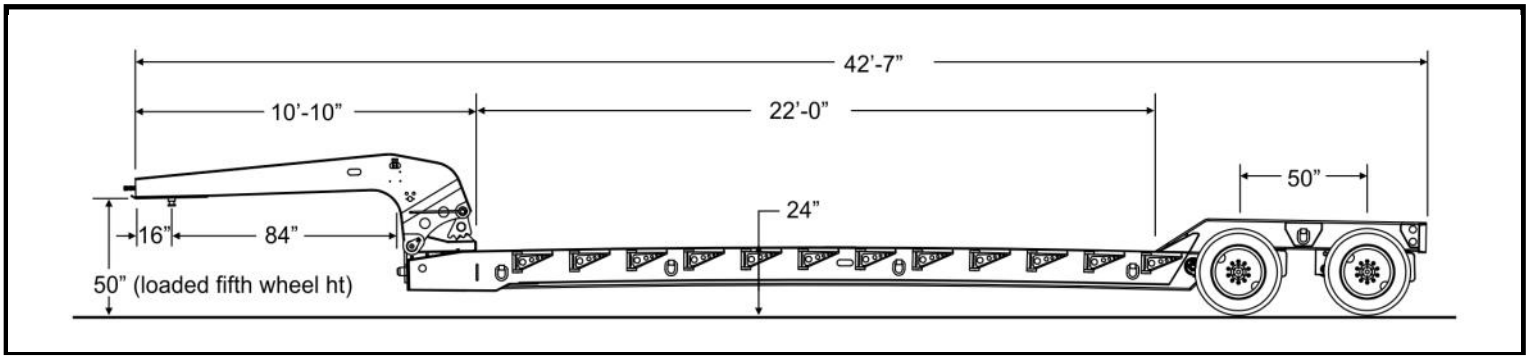

May be shown with options

STANDARD FEATURES

HITCH / TONGUE

- 2" king pin, 16" king pin setting
- 50" fifth-wheel height (loaded)
- 10'-10" Gooseneck
- 84" swing clearance
- Mechanical lock (fifth-wheel type), w/ air lock-pin release
- Wet line hydraulic system
- 5-position load blocks
- Gooseneck support arm (hydraulic)

FRAME / DECK

- 22 ft. main deck length, 102" load width
- 24" loaded deck height
- 16" fabricated steel main frame 100,000/80,000 psi
- 10" I-beam crossmembers
- Raised 2" oak wood deck (track only)
- 10 D-ring tie-downs (5/side)
- Std-duty swing-out and HD front double outriggers, w/oak planks

RAMPS / TAIL

- Half-bolster approach
- Bolsters between wheels
- Open boom well
- 55" axle spread

AXLES / SUSPENSION

- Air ride suspension
- (2) 25,000 lb. axles
- Tires - 255/70R22.5, load range H
- 22.5" budd wheels, 10-bolt, hub piloted
- Air brakes (sensor on 1 axle, 2S/1M) w/ABS
- Brake size (16.5x7), Park brakes on all axles
- Automatic slack adjusters
  - Oil bath hubs

LIGHTS / WIRING

- Rubber grommet mounted LED lights
- Sealed modular wiring

STANDARD FEATURES

- Limited Lifetime Frame Warranty*
- One-Year full Warranty*
- Weatherproof registration holder
- Media blasted
- Two-component polyurethane primer and paint
- Trailer color: Equipment Black
- Suspension dump valve with gauge

***See web site for warranty details**

***Weights and capacities vary depending upon options. Published weights are for reference only.**

GAWR (lbs)	GVWR (lbs)	WEIGHT (lbs)	CAPACITY (lbs)	DECK WIDTH (in)	DECK LENGTH (ft)	MSRP
40,560	85,200	15,200	70000 (16' dist.)	102"	22'	**$51,100**

Subject to F.E.T. – deduct $18.99 per tire

Towmaster manufactures a complete line of trailers in several capacities. Listed weights and dimensions are approximate and can vary depending upon options installed. See VIN tag for GVWR. Check our website or see your authorized dealer for more information. Manufacturer reserves the right to modify, change or discontinue models or options as seen fit without obligation to previously sold units. Written warranty covers each trailer. Some items shown may be optional equipment.

USA DESIGNED AND BUILT

©Copyright Towmaster, Inc.

Towmaster, Inc.
61381 US Hwy 12
Litchfield, MN 55355
www.towmaster.com

Toll Free: 800-462-4517
Local: 320-693-7900
Fax: 320-693-7921

TRAILERS • TRUCK EQUIPMENT

Effective Date: 1/15/2015

Detachable Goose-

Model: **T-100DTG**

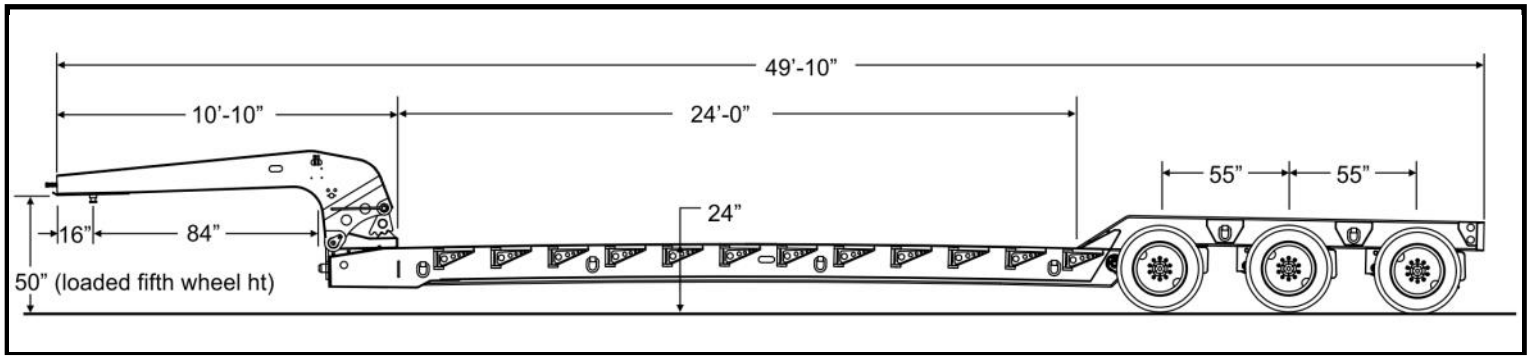

May be shown with options

STANDARD FEATURES

HITCH / TONGUE

- 2" king pin, 16" king pin setting
- 50" fifth-wheel height (loaded)
- 10'-10" Gooseneck
- 84" swing clearance
- Mechanical lock (fifth-wheel type), w/ air lock-pin release
- Wet line hydraulic system
- 5-position load blocks
- Gooseneck support arm (hydraulic)

FRAME / DECK

- 24 ft. main deck length, 102" load width
- 24" loaded deck height
- 16" fabricated steel main frame 100,000/80,000 psi
- 10" I-beam crossmembers
- Raised 2" oak wood deck (track only)
- 12 D-ring tie-downs (6/side)
- Std-duty swing-out and HD front double outriggers, w/oak planks

RAMPS / TAIL

- Half-bolster approach
- Bolsters between wheels
- Open boom well
- 55" axle spread

AXLES / SUSPENSION

- Air ride suspension
- (3) 25,000 lb. axles (12 wheels)
- Tires - 255/70R22.5, load range H
- 22.5" budd wheels, 10-bolt, hub piloted
- Air brakes (sensor on 1 axle, 2S/1M) w/ABS
- Brake size (16.5x7), Park brakes on all axles
- Automatic slack adjusters
  - Oil bath hubs

LIGHTS / WIRING

- Rubber grommet mounted LED lights
- Sealed modular wiring

STANDARD FEATURES

- Limited Lifetime Frame Warranty*
- One-Year full Warranty*
- Weatherproof registration holder
- Media blasted
- Two-component polyurethane primer and paint
- Trailer color: Equipment Black
- Suspension dump valve with gauge

***See web site for warranty details**

***Weights and capacities vary depending upon options. Published weights are for reference only.**

GAWR (lbs)	GVWR (lbs)	WEIGHT (lbs)	CAPACITY (lbs)	DECK WIDTH (in)	DECK LENGTH (ft)	MSRP
60,840	118,000	18,800	100000 (16' dist.)	102"	24'	**$67,420**

Subject to F.E.T. – deduct $18.99 per tire

Towmaster manufactures a complete line of trailers in several capacities. Listed weights and dimensions are approximate and can vary depending upon options installed. See VIN tag for GVWR. Check our website or see your authorized dealer for more information. Manufacturer reserves the right to modify, change or discontinue models or options as seen fit without obligation to previously sold units. Written warranty covers each trailer. Some items shown may be optional equipment.

USA DESIGNED AND BUILT

©Copyright Towmaster, Inc.

Towmaster, Inc.
61381 US Hwy 12
Litchfield, MN 55355
www.towmaster.com

Toll Free: 800-462-4517
Local: 320-693-7900
Fax: 320-693-7921

TRAILERS • TRUCK EQUIPMENT

Effective Date: 1/15/2015

Detachable Goose-

Model: **T-110DTG**

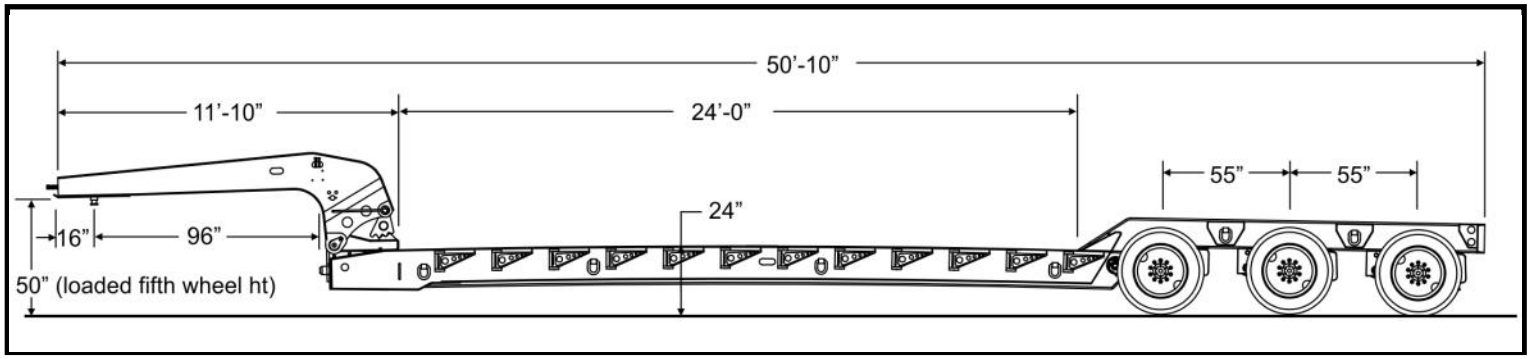

May be shown with options

STANDARD FEATURES

HITCH / TONGUE

- 2" king pin, 16" king pin setting
- 50" fifth-wheel height (loaded)
- 11'-10" Gooseneck
- 96" swing clearance
- Mechanical lock (fifth-wheel type), w/ air lock-pin release
- Wet line hydraulic system
- 5-position load blocks
- Gooseneck support arm (hydraulic)

FRAME / DECK

- 24 ft. main deck length, 102" load width
- 24" loaded deck height
- 16" fabricated steel main frame 100,000/80,000 psi
- 10" I-beam crossmembers
- Raised 2" oak wood deck (track only)
- 12 D-ring tie-downs (6/side)
- Hvy-duty swing-out and HD front double outriggers, w/oak planks

RAMPS / TAIL

- Half-bolster approach
- Bolsters between wheels
- Open boom well
- 55" axle spread

AXLES / SUSPENSION

- Air ride suspension
- (3) 25,000 lb. axles (12 wheels)
- Tires - 255/70R22.5, load range H
- 22.5" budd wheels, 10-bolt, hub piloted
- Air brakes (sensor on 1 axle, 2S/1M) w/ABS
- Brake size (16.5x7), Park brakes on all axles
- Automatic slack adjusters
  - Oil bath hubs

LIGHTS / WIRING

- Rubber grommet mounted LED lights
- Sealed modular wiring

STANDARD FEATURES

- Limited Lifetime Frame Warranty*
- One-Year full Warranty*
- Weatherproof registration holder
- Media blasted
- Two-component polyurethane primer and paint
- Trailer color: Equipment Black
- Suspension dump valve with gauge

***See web site for warranty details**

***Weights and capacities vary depending upon options. Published weights are for reference only.**

GAWR (lbs)	GVWR (lbs)	WEIGHT (lbs)	CAPACITY (lbs)	DECK WIDTH (in)	DECK LENGTH (ft)	MSRP
60,840	129,500	19,160	110000 (16' dist.)	102"	24'	**$68,785**

Subject to F.E.T. – deduct $18.99 per tire

Towmaster manufactures a complete line of trailers in several capacities. Listed weights and dimensions are approximate and can vary depending upon options installed. See VIN tag for GVWR. Check our website or see your authorized dealer for more information. Manufacturer reserves the right to modify, change or discontinue models or options as seen fit without obligation to previously sold units. Written warranty covers each trailer. Some items shown may be optional equipment.

USA DESIGNED AND BUILT

©Copyright Towmaster, Inc.

Towmaster, Inc.
61381 US Hwy 12
Litchfield, MN 55355
www.towmaster.com

Toll Free: 800-462-4517
Local: 320-693-7900
Fax: 320-693-7921

TRAILERS • TRUCK EQUIPMENT

Effective Date: 1/15/2015

Detachable Goose-

Model: **T-120DTG**

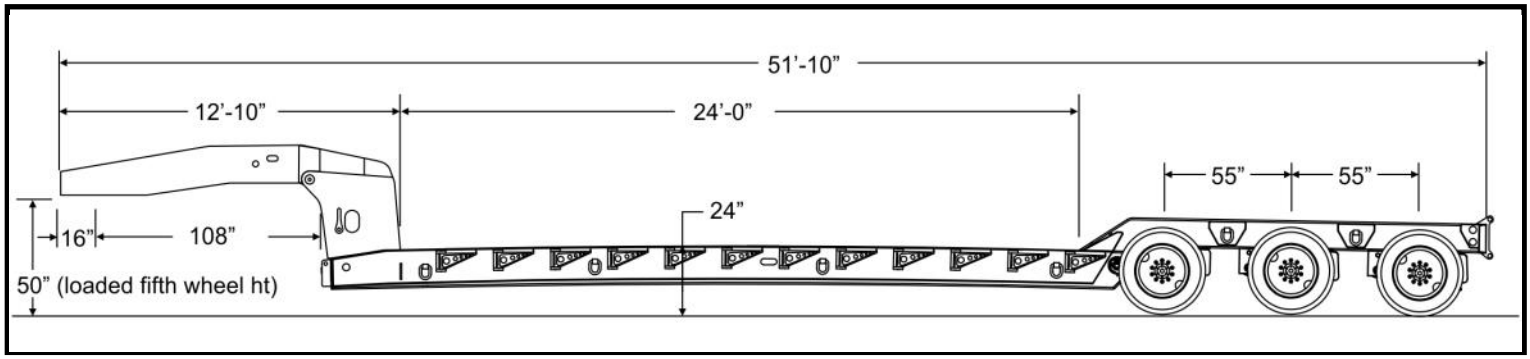

May be shown with options

STANDARD FEATURES

HITCH / TONGUE

- 2" king pin, 16" king pin setting
- 50" fifth-wheel height (loaded)
- 12'-10" Gooseneck
- 108" swing clearance
- Positive air lock w/air lock-pin release
- Wet line hydraulic system
- Adjustable transport doors
- Gooseneck support arm (hydraulic)

FRAME / DECK

- 24 ft. main deck length, 102" load width
- 24" loaded deck height
- 16" fabricated steel main frame 100,000/80,000 psi
- 10" I-beam crossmembers
- Raised 2" oak wood deck (track only)
- 12 D-ring tie-downs (6/side)
- Hvy-duty swing-out and HD front double outriggers, w/oak planks

RAMPS / TAIL

- Half-bolster approach
- Bolsters between wheels
- Open boom well
- 55" axle spread

AXLES / SUSPENSION

- Air ride suspension
- (3) 25,000 lb. axles
- Tires - 275/70R22.5, load range H
- 22.5" budd wheels, 10-bolt, hub piloted
- Air brakes w/o ABS (ABS not required, but recommended)
- Brake size (16.5x7), Park brakes on all axles
- Automatic slack adjusters
  - Oil bath hubs

LIGHTS / WIRING

- Rubber grommet mounted LED lights
- Sealed modular wiring

STANDARD FEATURES

- Limited Lifetime Frame Warranty*
- One-Year full Warranty*
- Weatherproof registration holder
- Media blasted
- Two-component polyurethane primer and paint
- Trailer color: Equipment Black
- Suspension dump valve with gauge

***See web site for warranty details**

***Weights and capacities vary depending upon options. Published weights are for reference only.**

GAWR (lbs)	GVWR (lbs)	WEIGHT (lbs)	CAPACITY (lbs)	DECK WIDTH (in)	DECK LENGTH (ft)	MSRP
60,840	140,000	20,000	120000 (16' dist.)	102"	24'	**$82,800**

Subject to F.E.T. – deduct $18.99 per tire

Towmaster manufactures a complete line of trailers in several capacities. Listed weights and dimensions are approximate and can vary depending upon options installed. See VIN tag for GVWR. Check our website or see your authorized dealer for more information. Manufacturer reserves the right to modify, change or discontinue models or options as seen fit without obligation to previously sold units. Written warranty covers each trailer. Some items shown may be optional equipment.

USA DESIGNED AND BUILT

©Copyright Towmaster, Inc.

Towmaster, Inc.
61381 US Hwy 12
Litchfield, MN 55355
www.towmaster.com

Toll Free: 800-462-4517
Local: 320-693-7900
Fax: 320-693-7921

TOWMASTER®
TRAILERS • TRUCK EQUIPMENT

Effective Date: 1/15/2015

Jeep/

Model: **T-80J**

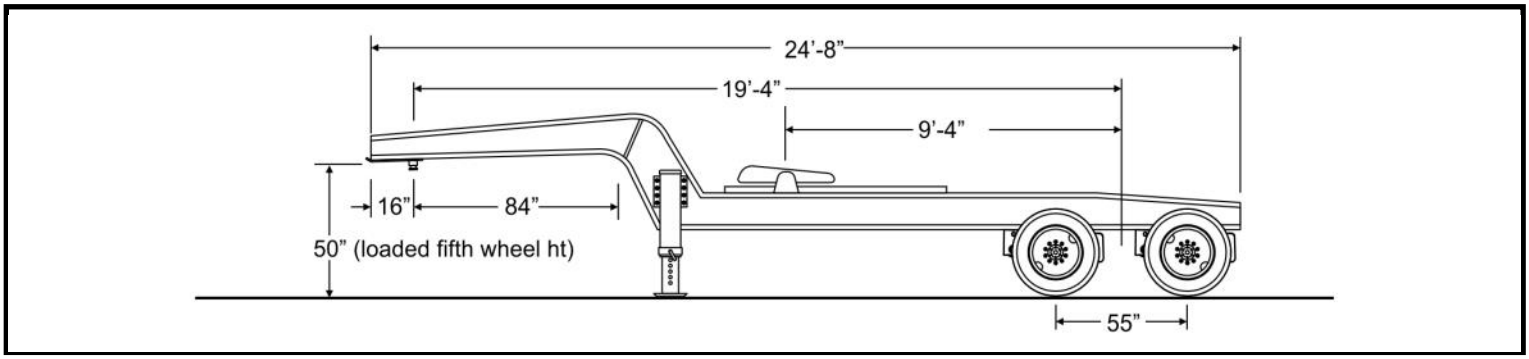

May be shown with options

STANDARD FEATURES

HITCH / TONGUE

- 2" king pin
- 16" king pin setting
- 50" fifth-wheel height (loaded)
- 84" swing clearance
- Telescoping pin-type parking stands

FRAME / DECK

- 96" width
- 16" fabricated steel main frame 100,000/80,000 psi
- 10" I-beam crossmembers
- 48" sliding fifth-wheel

RAMPS / TAIL

N/A

AXLES / SUSPENSION

- Air ride suspension
- (2) 25,000 lb. axles
- Tires - 255/70R22.5, load range H
- 22.5" budd wheels, 10-bolt, hub piloted
- Air brakes, no ABS (ABS not required, but recommended)
- Brake size (16.5x7), Park brakes on all axles
- Automatic slack adjusters
  - Oil bath hubs

LIGHTS / WIRING

- Rubber grommet mounted LED lights
- Sealed modular wiring

STANDARD FEATURES

- Limited Lifetime Frame Warranty*
- One-Year full Warranty*
- Weatherproof registration holder
- Media blasted
- Two-component polyurethane primer and paint
- Trailer color: Equipment Black
- Suspension dump valve with gauge

***See web site for warranty details**

***Weights and capacities vary depending upon options. Published weights are for reference only.**

GAWR (lbs)	GVWR (lbs)	WEIGHT (lbs)	CAPACITY (lbs)	DECK WIDTH (in)	DECK LENGTH (ft)	MSRP
50,000	95,000	7,500	80,000	N/A	N/A	**$34,590**

Subject to F.E.T. – deduct $18.99 per tire

Towmaster manufactures a complete line of trailers in several capacities. Listed weights and dimensions are approximate and can vary depending upon options installed. See VIN tag for GVWR. Check our website or see your authorized dealer for more information. Manufacturer reserves the right to modify, change or discontinue models or options as seen fit without obligation to previously sold units. Written warranty covers each trailer. Some items shown may be optional equipment.

USA DESIGNED AND BUILT

©Copyright Towmaster, Inc.

Towmaster, Inc.
61381 US Hwy 12
Litchfield, MN 55355
www.towmaster.com

Toll Free: 800-462-4517
Local: 320-693-7900
Fax: 320-693-7921

TOWMASTER®
TRAILERS • TRUCK EQUIPMENT

RG Deck-Over Options - Effective: 3/16/2016

Description	50RG	70RG	MSRP
TONGUE / HITCH			
30-degree sloped gooseneck	●	●	$1,875
Integrated dual storage trays with lids	●	●	$495
MAIN DECK			
Additional deck length (up to 34 ft. total deck length), priced per foot-call for additional	●	●	$480
Additional D-rings or stake pockets (each)	●	●	$35
Rub rail with stake pockets in lieu of D-rings (per foot of deck length)	●	●	$50
12K Electric winch (includes 125 ft. x 3/8” cable, corded remote, wiring to rear of truck)	●	●	$2,690
Battery Kit w/charger for winch (installed)	●	●	$515
Apitong wood deck (per linear foot)	●	●	$65
Sliding winch track (per foot) – curb side standard	●	●	$40
Sliding winch, 4” for winch track (each)	●	●	$45
Winch for cargo straps (each - P/N 37-2023) – welded on, curb side standard, 4”	●	●	$55
4” x 30 ft. cargo straps with flat hook (each)	●	●	$35
SUSPENSION			
Sensors on 2 axles (4S/2M)	●	●	$690
25K axle upgrade (per axle)	●	●	$390
Air Ride Suspension, 22.5K (includes dump valve), raises deck height 1.5”	●	●	$3,400
Spare tire mounting bracket, mounted on gooseneck	●	●	$150
Spare tire and wheel, 215/75R17.5, load range H	●	●	$525
22.5 wheel/brake option (includes 255/70R22.5 tire, 10-bolt wheels, 16.5x7 air brakes)		●	$1,430
Tire upgrade, 235/75R17.5 (ea)	●		$55
RAMPS			
Wood filled beavertail in lieu of angle iron	●	●	$185
5-foot angle-iron beavertail		●	$395
6-foot angle-iron beavertail	●	●	$465
Double-Break Beavertail (7’-6”) with 6-foot spring-assist ramps	●	●	$875
Bucket well in beavertail	●	●	$660
Third ramp	●	●	$555
6-foot steel cleated ramps	●	●	$175
6-foot wood filled ramps	●	●	$320
5 ft. wood filled ramps in lieu of angle iron	●	●	$125
6’-0” aluminum ramps to load top deck (17-degree load angle)	●	●	$1,525
Upper deck ramp storage for aluminum ramps (under top deck)	●	●	$395
Air operated ramps, 5’x22”, steel cleat or wood top	●	●	$2,995
Air operated ramps, 5’x36”, steel cleat or wood top	●	●	$3,265
Air operated ramps, 6’x22”, steel cleat or wood top	●	●	$3,145
Air operated ramps, 6’x36”, steel cleat or wood top	●	●	$3,415
Elec-over-hyd option, in lieu of air operated (add to air operated price)	●	●	$475
Bi-fold ramps, elec-over-hyd, 11’ at 9°, includes 6’ at 8° wood filled beavertail (26’ min. deck length required)	●	●	$8,890
OTHER			
Special color (no metallic) – color match only – ramps painted to match	●	●	CALL
2 chock blocks and holder mounted curb side under deck ahead of wheels	●	●	$220
Galvanizing	●	●	CALL
Trailer color options: Construction Yellow, Equipment Red, Equipment Blue, Equipment Charcoal	●	●	N/C

Towmaster manufactures a complete line of trailers in several capacities. Listed weights and dimensions are approximate and can vary depending upon options installed. See VIN tag for GVWR. Check our website or see your authorized dealer for more information. Manufacturer reserves the right to modify, change or discontinue models or options as seen fit without obligation to previously sold units. Written warranty covers each trailer. Some items shown may be optional equipment.

©Copyright Towmaster, Inc.

Towmaster, Inc.
61381 US Hwy 12
Litchfield, MN 55355
www.towmaster.com

Toll Free: 800-462-4517
Local: 320-693-7900
Fax: 320-693-7921

HT Deck-Over Options - Effective: 3/16/2016

Description	70HT	100HT	MSRP
UPPER DECK			
Deduct for no winch	●	●	-$1,875
20K Hyd. Winch w/Cable ILO	●	●	$2,140
Winch guard	●	●	$450
Winch roller (recessed)	●	●	$310
Winch mounted in slope of upper deck	●	●	$915
Wireless remote (winch only)	●	●	$1,350
Corded remote control (winch only)	●	●	$1,510
6-function wireless remote (with manual handles)	●	●	$3,200
Self-contained hydraulic unit – 12HP (mounted above winch)	●	●	$4,175
Self-contained hydraulic unit – 20HP (mounted above winch)	●	●	$5,920
Dual Hydraulics	●	●	$645
Cover for Self-contained hydraulic unit	●	●	$850
2-Speed 25K parking jacks (crank curb side)	●	●	$885
Dual hydraulic controls	●	●	$445
DECK RAMPS			
6’ hyd. recessed deck ramp (12” narrower than deck) not available on double drop deck w/tapered upper deck	●	●	$4,210
8’ hyd. recessed deck ramp (12” narrower than deck) not available on double drop deck w/tapered upper deck	●	●	$4,495
Ladder style ramps 7’-0” x 20”	●	●	$1,655
Wood filled ramps 7’-0” x 20”	●	●	$1,870
Star traction ramps over steel 7’-0” x 20”	●	●	$2,815
Bracket (only) for ramps	●	●	$290
MAIN DECK			
Additional deck length per foot (Max 2 ft.)	●	●	$975
Concentrated load in 10’ (50,000 on 35-ton model, 70,000 on 55-ton model)	●	●	$1,510
Cross members 8” on center on main deck	●	●	$755
Double drop deck, 6” drop approximately 10-degree angle	●	●	$3,125
Double drop deck, 12” drop approximately 12-degree angle	●	●	$3,450
Stake pockets 24” centers	●	●	$655
Additional D-Rings (each)	●	●	$35
Recessed D-rings (each)	●	●	$72
Stake pockets (each)	●	●	$65
Key-slots (each)	●	●	$50
1/4” floor plate over wheels only (3/16” is standard)	●		$475
1/4” floor plate over wheels only (3/16” is standard)		●	$680
Star traction over wood on main hydraulic tail	●	●	$710
1/4” floor plate over fold-under section (3/16” is standard)	●	●	$705
Star traction over steel on fold-under section only	●	●	$415
Traction aids on steel tail on outside 28” with wood center	●	●	$795
Tread-plate over wood	●	●	$1,950
Apitong decking, 1.5” thickness (per foot)	●	●	$65
9’ deck width	●	●	$1,195
10’ deck width		●	$3,450
12” swing-out outriggers without planks – 44’		●	$3,120
12” swing-out outriggers without planks – 45’		●	$3,305
12” swing-out outriggers without planks – 46’		●	$3,460
12” swing-out outriggers without planks – 48’		●	$3,825

HT Options Continued ————>

Towmaster manufactures a complete line of trailers in several capacities. Listed weights and dimensions are approximate and can vary depending upon options installed. See VIN tag for GVWR. Check our website or see your authorized dealer for more information. Manufacturer reserves the right to modify, change or discontinue models or options as seen fit without obligation to previously sold units. Written warranty covers each trailer. Some items shown may be optional equipment.

©Copyright Towmaster, Inc.

Towmaster, Inc.
61381 US Hwy 12
Litchfield, MN 55355
www.towmaster.com

Toll Free: 800-462-4517
Local: 320-693-7900
Fax: 320-693-7921

HT Deck-Over Options - Effective: 3/1/2016

Description	70HT	100HT	MSRP
SUSPENSION			
25,000 lb. axles in lieu of 22,500 lb. (each)	●	●	$190
Spring suspension (deduct)	●		-$3,596
Spring suspension (deduct)		●	-$5,387
3rd axle on spring suspension	●		$6,910
3rd axle on air ride suspension (must add air ride for trailer also)	●		$8,950
22.5 wheel and brake option, includes 255/70Rx22.5 tires, 10-bolt wheels, 16.5x7 air brakes (41” deck height)	●	●	$1,430
Wheel, steel – 6.75x17.5 x 8-bolt – each (without tire)	●	●	$158
Wheel, steel – 8.25x22.5 x 10-bolt – each (without tire)	●	●	$180
Wheel, machined aluminum – 6.75x17.5 x 8-bolt – each (without tire) ILO steel	●	●	$295
Wheel, machined aluminum – 8.25x22.5 x 10-bolt – each (without tire) ILO steel	●	●	$325
Wheel, polished aluminum – 6.75x17.5 x 8-bolt – each (without tire) ILO steel	●	●	$330
Wheel, polished aluminum – 8.25x22.5 x 10-bolt – each (without tire) ILO steel	●	●	$365
Tire - 235/75R17.5, load range H – 16 ply – each (tire only)	●	●	$315
Tire – 255/70Rx22.5, load range H – 16 ply – each (tire only)	●	●	$380
Spare tire and wheel (steel), 6.75x22.5x8-bolt, 235/75Rx17.5 tire	●	●	$475
Cat’s Eye Tire Equalization System (per complete axle)	●	●	$230
Digital Air Weigh Scale System	●	●	$1,995
Dual Dynamics Tire Equalization System (per complete axle)	●	●	$275
PSI Tire Inflation System for single axle	●	●	$1,340
4S/2M ABS option	●	●	$695
Raise/Lower Kit, 9” ride height (approx.. 4” up and 4” down)	●	●	$610
RAMPS			
6’ aluminum incline assist ramps (for tail)	●	●	$3,825
8’ aluminum incline assist ramps (for tail)	●	●	$4,015
OTHER			
Special color (no metallic) – color match only – ramps painted to match	●	●	CALL
Trailer color options: Construction Yellow, Equipment Red, Equipment Blue, Equipment Charcoal	●	●	N/C
4-pole female electrical socket wired to clearance light in light channel	●	●	$55
Additional socket for remote at front of trailer	●	●	$130
Side clearance lights (per pair)	●	●	$95
Mid-ship turn signals	●	●	$115
3rd taillight package	●	●	$155
Strobe light kits	●	●	$685
Flag holders (pair)	●	●	$70
Liquid filled air pressure gauge	●	●	$145
Brackets only for removable oversized load sign	●	●	$130

Towmaster manufactures a complete line of trailers in several capacities. Listed weights and dimensions are approximate and can vary depending upon options installed. See VIN tag for GVWR. Check our website or see your authorized dealer for more information. Manufacturer reserves the right to modify, change or discontinue models or options as seen fit without obligation to previously sold units. Written warranty covers each trailer. Some items shown may be optional equipment.

©Copyright Towmaster, Inc.

Towmaster, Inc.
61381 US Hwy 12
Litchfield, MN 55355
www.towmaster.com

Toll Free: 800-462-4517
Local: 320-693-7900
Fax: 320-693-7921

DTG Options - Effective: 3/1/2016

Description	70	100	110	120	MSRP
GOOSENECK					
11'-10" (96" swing clearance) – based on 84"	●	●			$1,295
12'-10" (108" swing clearance) – based on 84"		●	●	●	$1,535
13'-4" (114" swing clearance) – based on 84"		●	●	●	$2,995
18'-0" gooseneck with dual king pin settings (16" and 40")				●	$10,915
5'-0" Flip neck option for 18'-0" gooseneck – 16" king pin setting				●	$2,710
Fenders for gooseneck (aluminum)	●	●	●	●	$1,495
Removable two-position king pin (use with 11'-10" and longer gooseneck) set at 16" and (specify)	●	●	●	●	$580
Aluminum toolbox (lockable) in gooseneck	●	●	●	●	$910
Chain/tool storage tray in gooseneck – bolt-on	●	●	●	●	$395
Lockable lid for storage tray	●	●	●	●	$110
Gooseneck upper deck (wood-decked) welded on	●	●	●	●	$4,465
HYDRAULICS					
Self-contained hydraulic kit with 12HP Honda engine	●	●	●	●	$3,195
Dual hydraulic system (wet line / self-contained)	●	●	●	●	$645
MAIN DECK					
Load concentration in 10' (35-ton model)	●				$985
Load concentrated in 10' (under 25' only)		●	●	●	$2,175
Low deck option – 20" load height	●	●	●		$2,125
Tapered deck option w/20" load height	●	●	●		$7,800
Standard deck addt'l deck length per foot (up to 26' max) (call for more)	●	●	●	●	$890
Low deck - addt'l deck length/ft (up to 26' max)	●	●	●	●	$970
9'-0" wide deck (deck only)	●				$970
9'-0" wide deck and trunnion	●	●	●	●	$2,150
10'-0" wide deck and trunnion	●	●	●	●	$5,260
5" drop sides (fixed approach only)	●	●	●	●	$3,780
Chain/tool storage (bolt-on)	●	●	●	●	$395
Lockable lid for storage tray	●	●	●	●	$110
Center filled 2"Full oak deck – per foot	●	●	●	●	$26
Center filled 2" Apitong – per foot	●	●	●	●	$65
Outrigger deduct 22 ft. deck	●				-$600
Outrigger deduct 24 ft. deck	●	●	●	●	-$730
Heavy-duty outriggers in lieu of standard - each	●	●			$47
Heavy-duty outriggers (no brackets) – each	●	●	●	●	$148
Outrigger brackets – each	●	●	●	●	$51
Apitong outrigger boards in lieu of oak	●	●	●	●	$260
Apitong decking in lieu of oak –not in center deck (per foot)	●	●	●	●	$65
Side rail stiffeners	●	●	●	●	$615
Deck boom well (open, 3 crossmembers)	●	●	●	●	$795
Bucket plate	●	●	●	●	$520
Additional D-style lashing rings (each)	●	●	●	●	$35
Key slot cut-outs on outer side rail (each)	●	●	●	●	$51
4" Junior I-Beam crossmembers, outer rails only – per pair	●	●	●	●	$41

DTG Options Continued ————>

Towmaster manufactures a complete line of trailers in several capacities. Listed weights and dimensions are approximate and can vary depending upon options installed. See VIN tag for GVWR. Check our website or see your authorized dealer for more information. Manufacturer reserves the right to modify, change or discontinue models or options as seen fit without obligation to previously sold units. Written warranty covers each trailer. Some items shown may be optional equipment.

©Copyright Towmaster, Inc.

Towmaster, Inc.
61381 US Hwy 12
Litchfield, MN 55355
www.towmaster.com

Toll Free: 800-462-4517
Local: 320-693-7900
Fax: 320-693-7921

DTG Options - Effective: 3/1/2016

Description	70	100	110	120	MSRP
RAMPS					
Front ramps (42”), steel, pin-up	●	●	●	●	$885
Front center ramp – standard length, steel	●	●	●	●	$510
Rear folding spring-assist manual ramp, 5 ft. long, pair (beavertail required)	●	●	●		$1,630
Front fixed approach ramps in lieu of front flip	●	●	●	●	$695
Front flip-up approach ramps, DEDUCT	●	●	●	●	-$460
SUSPENSION					
Beavertail, 36” with track bars @ 17deg., adds 14” to overall length	●	●	●		$925
Raised wheel covers (bolt-on), price per axle	●	●	●	●	$1,585
Full length wheel covers, tandem (welded on)	●				$2,725
Full length wheel covers, triple (welded on)		●	●	●	$3,585
Boom well cover tray, tandem	●				$485
Boom well cover tray, triple		●	●	●	$585
Full width rear deck – steel, tandem	●				$3,150
Full width rear deck – wood, tandem	●				$3,650
Full width rear deck – steel, triple		●	●	●	$3,240
Full width rear deck – wood, triple		●	●	●	$3,770
3 ft. slope ahead of axles at 24 degrees (uses 14” of deck)	●	●	●	●	$1,580
4 ft. slope ahead of axles at 18 degrees (uses 26” of deck)	●	●	●	●	$1,880
Frame reinforcement for flip axle (includes brackets)		●	●		$1,195
Frame reinforcement for flip axle (includes brackets)				●	$2,245
Frame reinforcement for single booster (includes brackets)		●	●		$1,620
Frame reinforcement for single booster (includes brackets)				●	$2,650
Frame reinforcement for tandem booster (includes brackets)				●	$4,910
4th fixed axle			●		$12,450
4th fixed axle				●	$12,650
BOOSTER / FLIP AXLE					
14’-1” single axle booster extension only for use with flip axle (frame reinforcement required) (14’-1” measured center of rear trailer axle to first booster axle)			●	●	$12,810
14’-1” tandem axle booster extension only for use with two flip axles (frame reinforcement required) (14’-1” measured center of rear trailer axle to first booster axle)				●	$21,250
14’-1” single axle booster (frame reinforcement required) (14’-1” measured center of rear trailer axle to first booster axle) – with fixed axle			●	●	$24,995
14’-1” tandem axle booster (frame reinforcement required) (14’-1” measured center of rear trailer axle to first booster axle) – with fixed axle				●	$41,995
Flip axle (single axle)		●	●	●	$13,050
Flip axle in lieu of fixed third axle		●	●	●	$2,275

DTG Options Continued ————>

Towmaster manufactures a complete line of trailers in several capacities. Listed weights and dimensions are approximate and can vary depending upon options installed. See VIN tag for GVWR. Check our website or see your authorized dealer for more information. Manufacturer reserves the right to modify, change or discontinue models or options as seen fit without obligation to previously sold units. Written warranty covers each trailer. Some items shown may be optional equipment.

©Copyright Towmaster, Inc.

Towmaster, Inc.
61381 US Hwy 12
Litchfield, MN 55355
www.towmaster.com

Toll Free: 800-462-4517
Local: 320-693-7900
Fax: 320-693-7921

DTG Options - Effective: 3/1/2016

Description	70	100	110	120	MSRP
SUSPENSION					
55” spread axles – adds to overall length	●				$575
60” spread axles (T-70) – adds to overall length	●				$870
60” spread axles (T-100,110) – adds to overall length		●	●		$1,255
60” spread axles (T-120) – adds to overall length				●	$2,110
Lift axle (rear)		●	●	●	$1,625
Raise/lower kits, 9” ride height (approx. 4” up and 4” down)	●	●	●	●	$695
Manual ride height control valve	●	●	●	●	$310
2S/2M ABS system				●	$1,575
Sensors on 2 axles – 4S/2M	●	●	●		$695
4S/2M ABS system				●	$2,025
Wheel, steel - 8.25 x 22.5 x 10-bolt - each (without tire)	●	●	●	●	$180
Wheel, machined aluminum - 8.25 x 22.5 x 10-bolt - each (without tire) ILO steel	●	●	●	●	$325
Wheel, polished aluminum - 8.25 x 22.5 x 10 bolt - each (without tire) ILO steel	●	●	●	●	$365
Tire – 255/70Rx22.5, load range H – 16 ply – each (tire only)*	●	●	●		$380
Tire – 275/70Rx22.5, load range H – 16 ply – each (tire only)*	●	●	●	●	$545
Spare tire and wheel (steel), 8.25x22.5x10-bolt, 255/70Rx22.5 tire*	●	●	●		$610
Spare tire and wheel (steel), 8.25x22.5x10-bolt, 275/70Rx22.5 tire*	●	●	●	●	$775
Cat’s Eye Tire Equalization System (per complete axle)	●	●	●	●	$230
Digital Air Weigh Scale System	●	●	●	●	$1,995
Scale-O-Matic SM 140	●	●	●	●	$290
Dual Dynamics Tire Equalization System (per complete axle)	●	●	●	●	$275
PSI Tire Inflation System (per axle)	●	●	●	●	$1,340
OTHER					
Special color (no metallic) – color match only	●	●	●	●	CALL
Trailer color options: Construction Yellow, Equipment Red, Equipment Blue, Equipment Charcoal	●	●	●	●	N/C
LED strobe light kit – switched and mounted (trailer only)	●	●	●	●	$685
Battery pack w/flasher for marker lights	●	●	●	●	$410

***Subject to F.E.T.: 255/70Rx22.5 deduct $18.99 per tire**
275/70Rx22.5 deduct $32.51 per tire

Towmaster manufactures a complete line of trailers in several capacities. Listed weights and dimensions are approximate and can vary depending upon options installed. See VIN tag for GVWR. Check our website or see your authorized dealer for more information. Manufacturer reserves the right to modify, change or discontinue models or options as seen fit without obligation to previously sold units. Written warranty covers each trailer. Some items shown may be optional equipment.

©Copyright Towmaster, Inc.

Towmaster, Inc.
61381 US Hwy 12
Litchfield, MN 55355
www.towmaster.com

Toll Free: 800-462-4517
Local: 320-693-7900
Fax: 320-693-7921

Jeep Options - Effective: 3/1/2016

Description	MSRP
GOOSENECK	
Fenders for gooseneck (aluminum)	$1,495
Aluminum toolbox (lockable) in gooseneck	$910
Chain/tool storage tray in gooseneck – bolt-on	$395
Lockable lid for storage tray	$110
MAIN DECK	
8’-6” width option	$630
9’-0” width option	$895
Flag holders	$75
SUSPENSION	
60” axle spacing	$795
Raise/lower kit, 9” ride height (approx. 4” up and 4” down)	$695
Manual ride height control valve	$310
2S/1M ABS system	$1,575
4S/2M ABS system	$2,025
Wheel, steel - 8.25 x 22.5 x 10-bolt - each (without tire)	$180
Wheel, machined aluminum - 8.25 x 22.5 x 10-bolt - each (without tire) ILO	$325
Wheel, polished aluminum - 8.25 x 22.5 x 10 bolt - each (without tire) ILO	$365
Tire – 255/70Rx22.5, load range H – 16 ply – each (tire only)	$380
Tire – 275/70Rx22.5, load range H – 16 ply – each (tire only)	$545
Cat’s Eye Tire Equalization System (per complete axle)	$230
Dual Dynamics Tire Equalization System (per complete axle)	$275
PSI Tire Inflation System (per axle)	$1,340
OTHER	
Special color (no metallic) – color match only – ramps painted to match	CALL
Trailer color options: Construction Yellow, Equipment Red, Equipment Blue, Equipment Charcoal	N/C

Towmaster manufactures a complete line of trailers in several capacities. Listed weights and dimensions are approximate and can vary depending upon options installed. See VIN tag for GVWR. Check our website or see your authorized dealer for more information. Manufacturer reserves the right to modify, change or discontinue models or options as seen fit without obligation to previously sold units. Written warranty covers each trailer. Some items shown may be optional equipment.

©Copyright Towmaster, Inc.

This page left blank.

© Towmaster, Inc. All Rights Reserved Printed in the U.S.A.

Towmaster, Inc.

61381 US Hwy 12

Litchfield, MN 55355

Phone: 320-693-7900

Toll Free: 800-462-4517

Fax: 320-693-7921

Parts Department

Phone: 320-593-4595

Toll Free: 866-239-2221

Fax: 320-693-5703

Shipping Department

Phone: 320-593-4554

Toll Free: 800-642 0742

Fax: 320-693-2047

Towmaster.com

© Towmaster, Inc. All Rights Reserved Printed in the U.S.A.