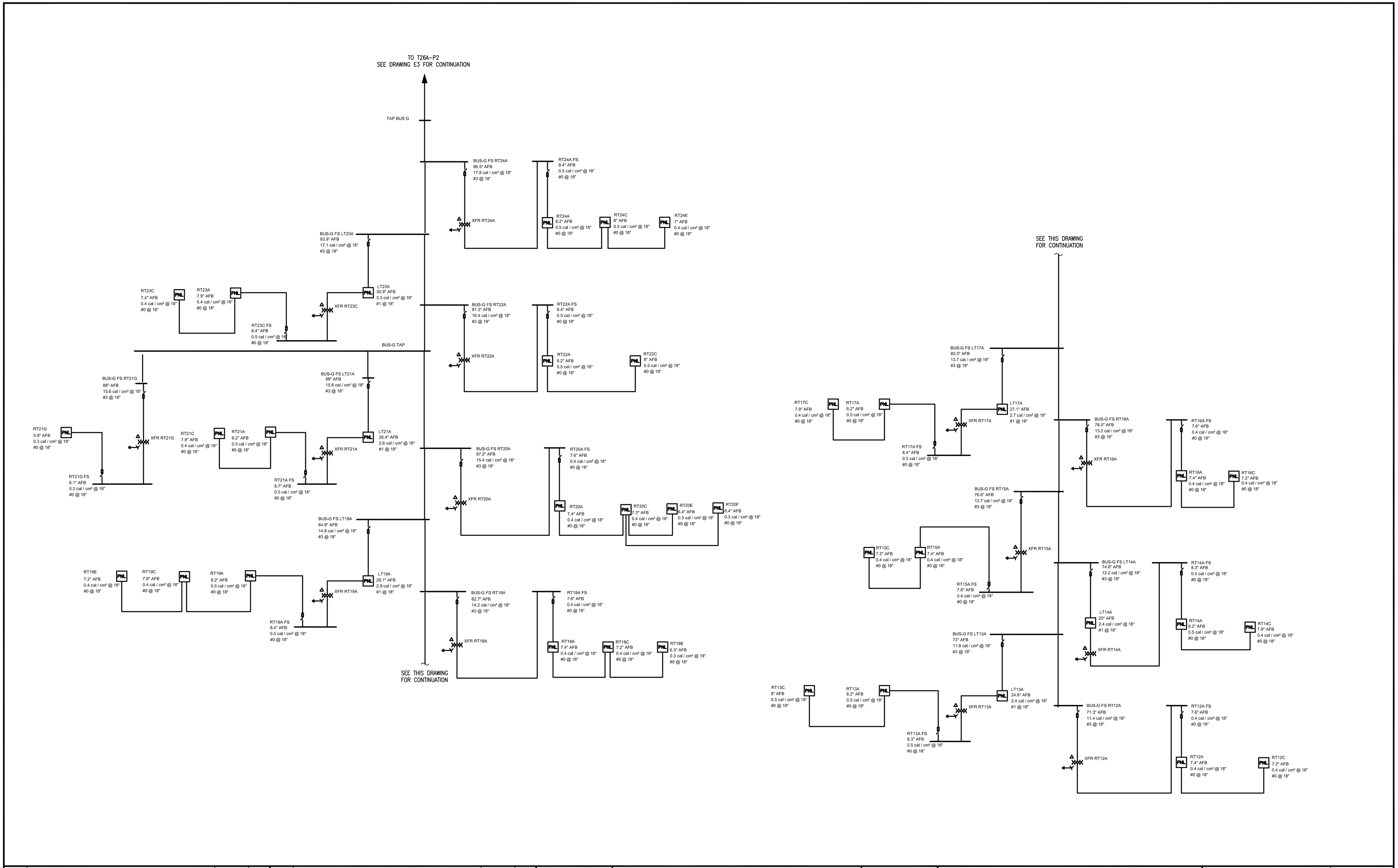


| MARK | DESCRIPTION OF ISSUE | DATE | BY |
|---|---|---|---|
| A | ARC FLASH HAZARD ANALYSIS | 2–12–09 | MRB |

| MARK | DESCRIPTION OF REVISION | DATE | BY |
|---|---|---|---|
| | | | |

OSBORN ENGINEERING
1300 East 9th Street - Suite 1500 | Cleveland, OH 44114
(216)861-2020 www.osborn-eng.com
441 Wolf Ledges Parkway - Suite 300 | Akron, OH 44311
(330)535-3132

Unless otherwise stated in Contract, The Osborn Engineering Company retains copyright ownership. Instruments of Service may only be used for the purpose described in the Contract. The Osborn Engineering Company may grant specific usage rights under license, and / or may transfer copyright ownership / assignment in writing. Reproduction, re-use or redistribution of Instruments of Service is prohibited.

OBA RIFFE BUILDING
COLUMBUS, OH
ARC FLASH HAZARD ANALYSIS
ONE–LINE DIAGRAM SHEET 12 OF 13

SCALE
AS NOTED

OSBORN PROJECT NO. 13660

| ISSUE NO | | | |
|---|---|---|---|
| | DRAWN | 2–9–09 | MRB |
| | CHECKED | 2–9–09 | AJH |
| | PRINTED | | |

DRAWING NO
E–12

K:\VOL4\OBA\3660\ELECT\13660–000_E12.DWG
MBLOOM / Feb. 11, 09