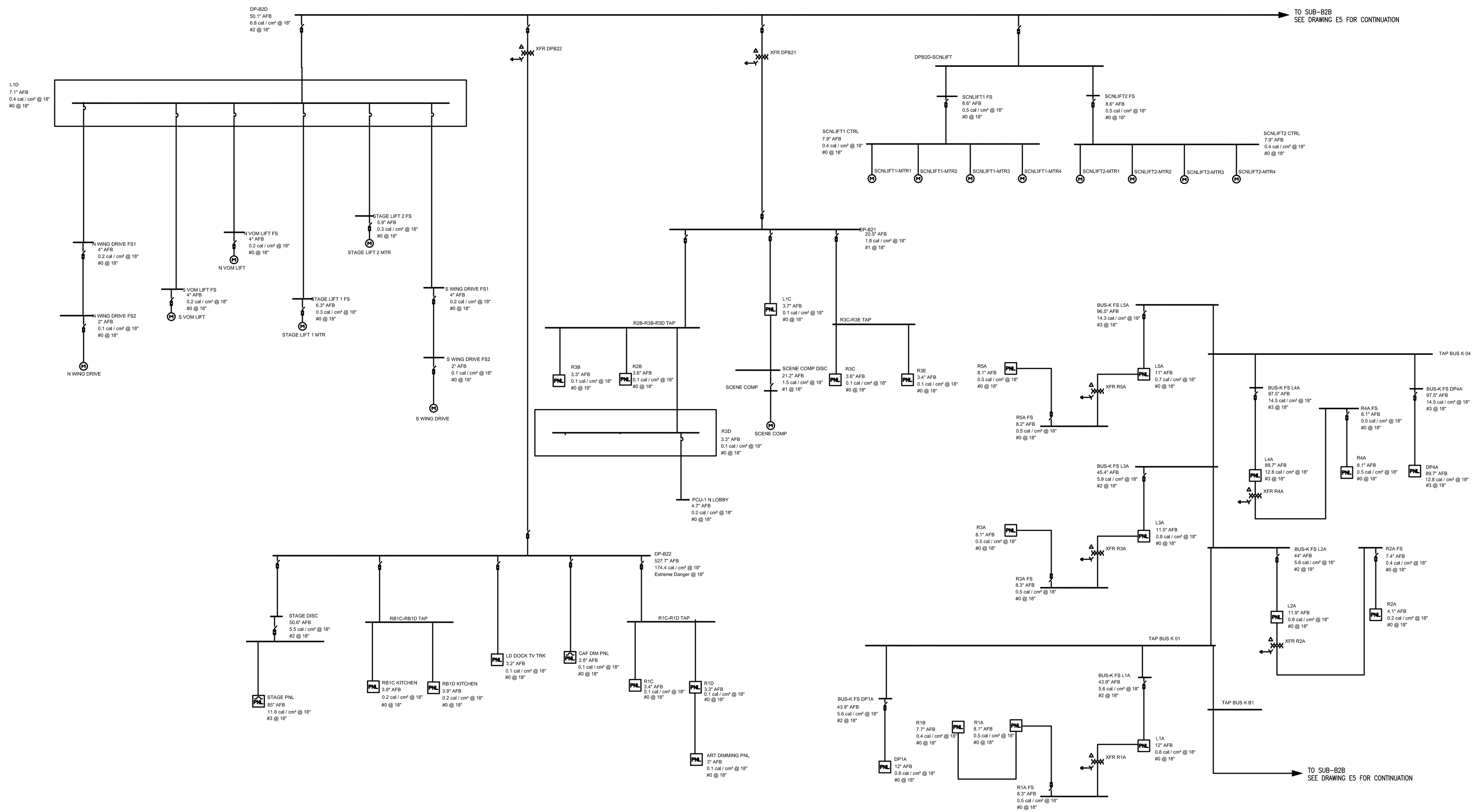

MARK	DESCRIPTION OF ISSUE	DATE	BY
A	ARC FLASH HAZARD ANALYSIS	2-12-09	MRB

MARK	DESCRIPTION OF REVISION	DATE	BY

OSBORN ENGINEERING

1300 East 9th Street - Suite 1500 | Cleveland, OH 44114
(216)861-2020
www.osborn-eng.com

441 Wolf Ledges Parkway - Suite 300 | Akron, OH 44311
(330)535-3132

Unless otherwise stated in Contract, The Osborn Engineering Company retains copyright ownership. Instruments of Service may only be used for the purpose described in the Contract. The Osborn Engineering Company may grant specific usage rights under license, and / or may transfer copyright ownership / assignment in writing. Reproduction, reuse or re-distribution of Instruments of Service is prohibited.

OBA RIFFE BUILDING

COLUMBUS, OH

ARC FLASH HAZARD ANALYSIS

ONE-LINE DIAGRAM SHEET 6 OF 13

SCALE: AS NOTED

OSBORN PROJECT NO. 13660

ISSUE NO			
	DRAWN	2-9-09	MRB
	CHECKED	2-9-09	AJH
	PRINTED		

DRAWING NO: E-6

K:\VOL4\OBA\3660\ELECT\13660-000_E06.DWG
MBLOOM / Feb. 11, 09